TIP PROJECT: B-4708

CONTRACT: DB00167

STATE	PROJECT REFERENCE NO.	SHEET NO.	TOTAL SHEETS
NC	B-4708	1	X

STATE PROJ. NO.	F.A. PROJ. NO.	DESCRIPTION
38483.1.2	BRSTP-1001(47)	CONST.

See Sheet 1-A For Index of Sheets

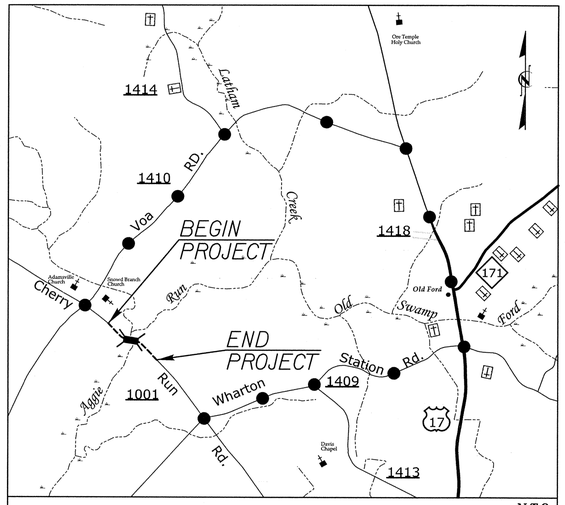

VICINITY MAP ●-●-● DETOUR ROUTE N.T.S.

STATE OF NORTH CAROLINA
DIVISION OF HIGHWAYS

BEAUFORT COUNTY

LOCATION: BRIDGE NO. 005 OVER AGGIE RUN ON SR 1001 (CHERRY RUN RD.)

TYPE OF WORK: GRADING, PAVING, DRAINAGE & STRUCTURE

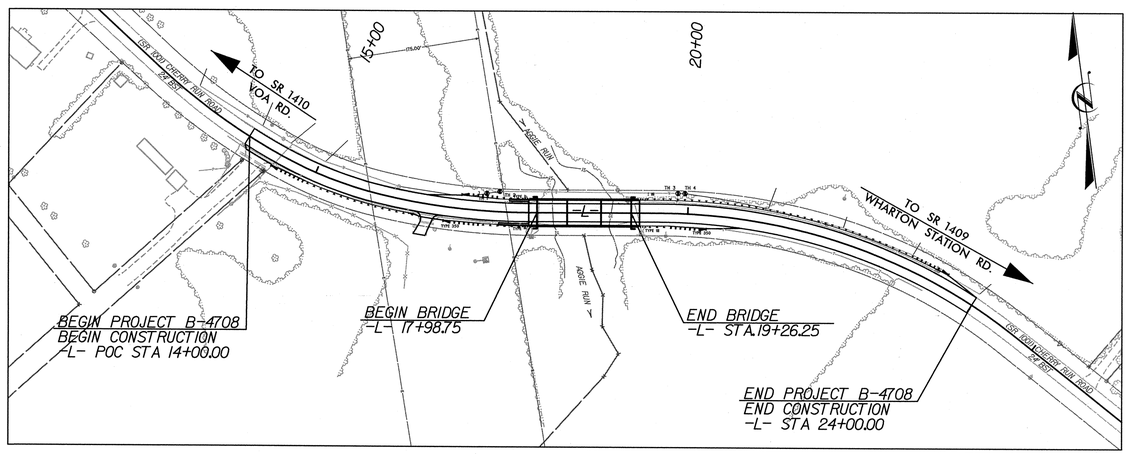

CLEARING ON THIS PROJECT SHALL BE PERFORMED TO THE LIMITS ESTABLISHED BY METHOD II.

GRAPHIC SCALES

50 25 0 50 100
PLANS

50 25 0 50 100
PROFILE (HORIZONTAL)

10 5 0 10 20
PROFILE (VERTICAL)

DESIGN DATA

ADT 2009 = 1000
ADT 2035 = 1400
DHV = 10%
D = 60%
T = 3% *

STATUTORY = 55 MPH
ADVISORY = 40 MPH

* TTST 1% DUAL 2%
SUB REGIONAL TIER

PROJECT LENGTH

LENGTH OF ROADWAY TIP PROJECT B-4708 = 0.16 MI.

LENGTH OF STRUCTURE TIP PROJECT B-4708 = 0.02 MI.

TOTAL LENGTH OF TIP PROJECT B-4708 = 0.18 MI.

Prepared In the Office of:

HNTB NORTH CAROLINA, P.C.
343 E. Six Forks Road, Suite 200
Raleigh, North Carolina 27609
NC License No: C-1554

2012 STANDARD SPECIFICATIONS

RIGHT OF WAY DATE:
JULY 15, 2013

LETTING DATE:
APRIL 15, 2014

ENRICO A. ROQUE, P.E.
PROJECT ENGINEER

ANTHONY THOMPSON, P.E
PROJECT DESIGNER

MARIA ROGERSON, P.E.
NCDOT CONTACT

HYDRAULICS ENGINEER

NORTH CAROLINA PROFESSIONAL SEAL 15764 ENGINEER JAMES A. BYRD

James A. Byrd P.E. 12/19/13
SIGNATURE:

ROADWAY DESIGN ENGINEER

NORTH CAROLINA PROFESSIONAL SEAL 19824 ENGINEER ENRICO A. ROQUE

Enrico A. Roque P.E. 12/19/13
SIGNATURE:

DIVISION OF HIGHWAYS
STATE OF NORTH CAROLINA

P.E.
STATE HIGHWAY DESIGN ENGINEER

12/18/2013
3:14:21 PM
...\Roadway\Proj\B4708_rdy_tsh.dgn

HNTB NORTH CAROLINA, P.C.
343 E. Six Forks Road, Suite 200
Raleigh, North Carolina 27609
NC License No: C-1554

PROJECT REFERENCE NO.	SHEET NO.
B-4708	1-A
R/W SHEET NO.	
ROADWAY DESIGN ENGINEER	HYDRAULICS ENGINEER

NORTH CAROLINA PROFESSIONAL SEAL 19824 ENGINEER
12/17/13

REVISIONS

INDEX OF SHEETS

SHEET NUMBER	SHEET
1	TITLE SHEET
1-A	INDEX OF SHEETS, GENERAL NOTES & LIST OF STANDARDS
1-B	SYMBOLOGY SHEET
2	TYPICAL SECTION SHEET
3	EARTHWORK, PAVEMENT REMOVAL, GUARDRAIL SUMMARY, ROW SUMMARY, & DRAINAGE SUMMARY SHEET
4	PLAN & PROFILE SHEET
TMP-1 THRU TMP-2	TRAFFIC CONTROL PLANS
EC-1 THRU EC-6	EROSION CONTROL PLANS
P-1	PERMIT DRAWING
X-1 THRU X-9	-L- CROSS SECTION SHEETS
S-1 THRU S-18	BRIDGE PLANS
UC-1 THRU UC-4	UTILITIES CONSTRUCTION

GENERAL NOTES:

2012 SPECIFICATIONS
EFFECTIVE: 01-17-2012
REVISED: 07-30-2012

GRADE LINE:
GRADING AND SURFACING:

THE GRADE LINES SHOWN DENOTE THE FINISHED ELEVATION OF THE PROPOSED SURFACING AT GRADE POINTS SHOWN ON THE TYPICAL SECTIONS. GRADE LINES MAY BE ADJUSTED AT THEIR BEGINNING AND ENDING AND AT STRUCTURES AS DIRECTED BY THE ENGINEER IN ORDER TO SECURE A PROPER TIE-IN.

CLEARING:

CLEARING ON THIS PROJECT SHALL BE PERFORMED TO THE LIMITS ESTABLISHED BY METHOD II.

SUPERELEVATION:

ALL CURVES ON THIS PROJECT SHALL BE SUPERELEVATED IN ACCORDANCE WITH STD. NO. 225.04 AND/OR STD. NO. 225.05 USING THE RATE OF SUPERELEVATION AND RUNOFF SHOWN ON THE PLANS. SUPERELEVATION IS TO BE REVOLVED ABOUT THE GRADE POINTS SHOWN ON THE TYPICAL SECTIONS.

SHOULDER CONSTRUCTION:

ASPHALT, EARTH, AND CONCRETE SHOULDER CONSTRUCTION ON THE HIGH SIDE OF SUPERELEVATED CURVES SHALL BE IN ACCORDANCE WITH STD. NO. 560.01.

SIDE ROADS:

THE CONTRACTOR WILL BE REQUIRED TO DO ALL NECESSARY WORK TO PROVIDE SUITABLE CONNECTIONS WITH ALL ROADS, STREETS, AND DRIVES ENTERING THIS PROJECT. THIS WORK WILL BE PAID FOR AT THE CONTRACT UNIT PRICE FOR THE PARTICULAR ITEMS INVOLVED.

DRIVEWAYS:

DRIVEWAYS SHALL BE CONSTRUCTED IN ACCORDANCE WITH STD. NO. 848.02 USING 3' RADII OR RADII AS SHOWN ON THE PLANS. LOCATIONS OF DRIVES WILL BE AS SHOWN ON THE PLANS OR AS DIRECTED BY THE ENGINEER.

GUARDRAIL:

THE GUARDRAIL LOCATIONS SHOWN ON THE PLANS MAY BE ADJUSTED DURING CONSTRUCTION AS DIRECTED BY THE ENGINEER. THE CONTRACTOR SHOULD CONSULT WITH THE ENGINEER PRIOR TO ORDERING GUARDRAIL MATERIAL.

SUBSURFACE PLANS:

NO SUBSURFACE PLANS ARE AVAILABLE ON THIS PROJECT. THE CONTRACTOR SHOULD MAKE HIS OWN INVESTIGATION AS TO THE SUBSURFACE CONDITIONS.

END BENTS:

THE ENGINEER SHALL CHECK THE STRUCTURE END BENT PLANS, DETAILS, AND CROSS-SECTION PRIOR TO SETTING OF THE SLOPE STAKES FOR THE EMBANKMENT OR EXCAVATION APPROACHING A BRIDGE.

UTILITIES:

UTILITY OWNERS ON THIS PROJECT ARE Phone - Centurylink

Water - Beaufort County Water

Power - City of Washington

ANY RELOCATION OF EXISTING UTILITIES WILL BE ACCOMPLISHED BY OTHERS. EXCEPT AS SHOWN ON THE PLANS.

RIGHT-OF-WAY MARKERS:

ALL RIGHT-OF-WAY MARKERS ON THIS PROJECT SHALL BE PLACED BY OTHERS.

2012 ROADWAY ENGLISH STANDARD DRAWINGS

The following Roadway Standards as appear in "Roadway Standard Drawings" Highway Design Branch - N. C. Department of Transportation - Raleigh, N. C., Dated January, 2012 are applicable to this project and by reference hereby are considered a part of these plans:

STD.NO.	TITLE
DIVISION 2 - EARTHWORK	
200.02	Method of Clearing - Method II
225.02	Guide for Grading Subgrade - Secondary and Local
225.04	Method of Obtaining Superelevation - Two Lane Pavement
DIVISION 3 - PIPE CULVERTS	
300.01	Method of Pipe Installation
310.10	Driveway Pipe Construction
DIVISION 4 - MAJOR STRUCTURES	
422.10	Reinforced Bridge Approach Fills
DIVISION 5 - SUBGRADE, BASES AND SHOULDERS	
560.01	Method of Shoulder Construction - High Side of Superelevated Curve - Method I
DIVISION 8 - INCIDENTALS	
806.01	Concrete Right-of-Way Marker
840.29	Frames and Narrow Slot Flat Grates
840.36	Traffic Bearing Grated Drop Inlet - for Steel (840.37) Double Frame and Grates
840.37	Steel Grate and Frame
846.01	Concrete Curb, Gutter and Curb & Gutter
846.04	Drop Inlet Installation in Shoulder Berm Gutter
848.02	Driveway Turnout - Radius Type
862.01	Guardrail Placement
862.02	Guardrail Installation
862.03	Structure Anchor Units
876.02	Guide for Rip Rap at Pipe Outlets

12/18/2013
3:13:36 PM
...\Roadway\Proj\B4708_rdy_gen.dgn

PROJECT REFERENCE NO.	SHEET NO.
B-4708	1-B

Note: Not to Scale

**S.U.E. = Subsurface Utility Engineering*

STATE OF NORTH CAROLINA
DIVISION OF HIGHWAYS

CONVENTIONAL PLAN SHEET SYMBOLS

BOUNDARIES AND PROPERTY:

- State Line
- County Line
- Township Line
- City Line
- Reservation Line
- Property Line
- Existing Iron Pin — EIP
- Property Corner
- Property Monument — ECM
- Parcel/Sequence Number — 123
- Existing Fence Line
- Proposed Woven Wire Fence
- Proposed Chain Link Fence
- Proposed Barbed Wire Fence
- Existing Wetland Boundary — WLB
- Proposed Wetland Boundary — WLB
- Existing Endangered Animal Boundary — EAB
- Existing Endangered Plant Boundary — EPB

BUILDINGS AND OTHER CULTURE:

- Gas Pump Vent or U/G Tank Cap
- Sign — S
- Well — W
- Small Mine
- Foundation
- Area Outline
- Cemetery
- Building
- School
- Church
- Dam

HYDROLOGY:

- Stream or Body of Water
- Hydro, Pool or Reservoir
- Jurisdictional Stream — JS
- Buffer Zone 1 — BZ 1
- Buffer Zone 2 — BZ 2
- Flow Arrow
- Disappearing Stream
- Spring
- Wetland
- Proposed Lateral, Tail, Head Ditch — FLOW
- False Sump

RAILROADS:

- Standard Gauge — CSX TRANSPORTATION
- RR Signal Milepost — MILEPOST 35
- Switch — SWITCH
- RR Abandoned
- RR Dismantled

RIGHT OF WAY:

- Baseline Control Point
- Existing Right of Way Marker
- Existing Right of Way Line
- Proposed Right of Way Line — RW
- Proposed Right of Way Line with Iron Pin and Cap Marker — RW
- Proposed Right of Way Line with Concrete or Granite Marker — RW
- Existing Control of Access — CA
- Proposed Control of Access — CA
- Existing Easement Line — E
- Proposed Temporary Construction Easement — E
- Proposed Temporary Drainage Easement — TDE
- Proposed Permanent Drainage Easement — PDE
- Proposed Permanent Utility Easement — PUE

ROADS AND RELATED FEATURES:

- Existing Edge of Pavement
- Existing Curb
- Proposed Slope Stakes Cut — C
- Proposed Slope Stakes Fill — F
- Proposed Wheel Chair Ramp — WCR
- Proposed Wheel Chair Ramp Curb Cut — WCC
- Curb Cut for Future Wheel Chair Ramp — CCFR
- Existing Metal Guardrail
- Proposed Guardrail
- Existing Cable Guiderail
- Proposed Cable Guiderail
- Equality Symbol
- Pavement Removal

VEGETATION:

- Single Tree
- Single Shrub
- Hedge
- Woods Line
- Orchard
- Vineyard — Vineyard

EXISTING STRUCTURES:

MAJOR:

- Bridge, Tunnel or Box Culvert — CONC
- Bridge Wing Wall, Head Wall and End Wall — CONC WW

MINOR:

- Head and End Wall — CONC HW
- Pipe Culvert
- Footbridge
- Drainage Box: Catch Basin, DI or JB — CB
- Paved Ditch Gutter
- Storm Sewer Manhole — S
- Storm Sewer — S

UTILITIES:

POWER:

- Existing Power Pole
- Proposed Power Pole
- Existing Joint Use Pole
- Proposed Joint Use Pole
- Power Manhole — P
- Power Line Tower
- Power Transformer
- U/G Power Cable Hand Hole — HH
- H-Frame Pole
- Recorded U/G Power Line — P
- Designated U/G Power Line (S.U.E.*) — P

TELEPHONE:

- Existing Telephone Pole
- Proposed Telephone Pole
- Telephone Manhole — T
- Telephone Booth
- Telephone Pedestal — T
- Telephone Cell Tower
- U/G Telephone Cable Hand Hole — HH
- Recorded U/G Telephone Cable — T
- Designated U/G Telephone Cable (S.U.E.*) — T
- Recorded U/G Telephone Conduit — TC
- Designated U/G Telephone Conduit (S.U.E.*) — TC
- Recorded U/G Fiber Optics Cable — T FO
- Designated U/G Fiber Optics Cable (S.U.E.*) — T FO

WATER:

- Water Manhole — W
- Water Meter
- Water Valve
- Water Hydrant
- Recorded U/G Water Line — W
- Designated U/G Water Line (S.U.E.*) — W
- Above Ground Water Line — A/G Water

TV:

- TV Satellite Dish
- TV Pedestal — C
- TV Tower
- U/G TV Cable Hand Hole — HH
- Recorded U/G TV Cable — TV
- Designated U/G TV Cable (S.U.E.*) — TV
- Recorded U/G Fiber Optic Cable — TV FO
- Designated U/G Fiber Optic Cable (S.U.E.*) — TV FO

GAS:

- Gas Valve
- Gas Meter
- Recorded U/G Gas Line — G
- Designated U/G Gas Line (S.U.E.*) — G
- Above Ground Gas Line — A/G Gas

SANITARY SEWER:

- Sanitary Sewer Manhole
- Sanitary Sewer Cleanout
- U/G Sanitary Sewer Line — SS
- Above Ground Sanitary Sewer — A/G Sanitary Sewer
- Recorded SS Forced Main Line — FSS
- Designated SS Forced Main Line (S.U.E.*) — FSS

MISCELLANEOUS:

- Utility Pole
- Utility Pole with Base
- Utility Located Object
- Utility Traffic Signal Box — S
- Utility Unknown U/G Line — ?UTL
- U/G Tank; Water, Gas, Oil
- A/G Tank; Water, Gas, Oil
- U/G Test Hole (S.U.E.*)
- Abandoned According to Utility Records — AATUR
- End of Information — E.O.I.

HNTB
HNTB NORTH CAROLINA, P.C.
343 E. Six Forks Road, Suite 200
Raleigh, North Carolina 27609
NC License No: C-1554

PROJECT REFERENCE NO.	SHEET NO.
B-4708	2
R/W SHEET NO.	
ROADWAY DESIGN ENGINEER	HYDRAULICS ENGINEER

NORTH CAROLINA PROFESSIONAL SEAL 19824 ENGINEER RICHARD D. ... 12/19/13

PAVEMENT SCHEDULE	
C1	PROP. APPROX. 2.5" ASPHALT CONCRETE SURFACE COURSE, TYPE SF9.5A, AT AN AVERAGE RATE OF 137.5 LBS. PER SQ. YARD IN EACH OF TWO LAYERS.
E	PROP. APPROX. 4" ASPHALT CONCRETE BASE COURSE, TYPE B25.0B, AT AN AVERAGE RATE OF 456 LBS. PER SQ. YARD.
E1	PROP. VARIABLE DEPTH ASPHALT CONCRETE BASE COURSE, TYPE B25.0B AT AN AVERAGE RATE OF 114 LBS. PER SQ. YARD PER INCH. DEPTH TO BE PLACED IN LAYERS NOT GREATER THAN 5.5" IN DEPTH OR LESS THAN 3" IN DEPTH.
T	EARTH MATERIAL
U	EXISTING PAVEMENT
W	WEDGING (SEE DETAIL)

ALL PAVEMENT EDGE SLOPES ARE 1:1 UNLESS SHOWN OTHERWISE

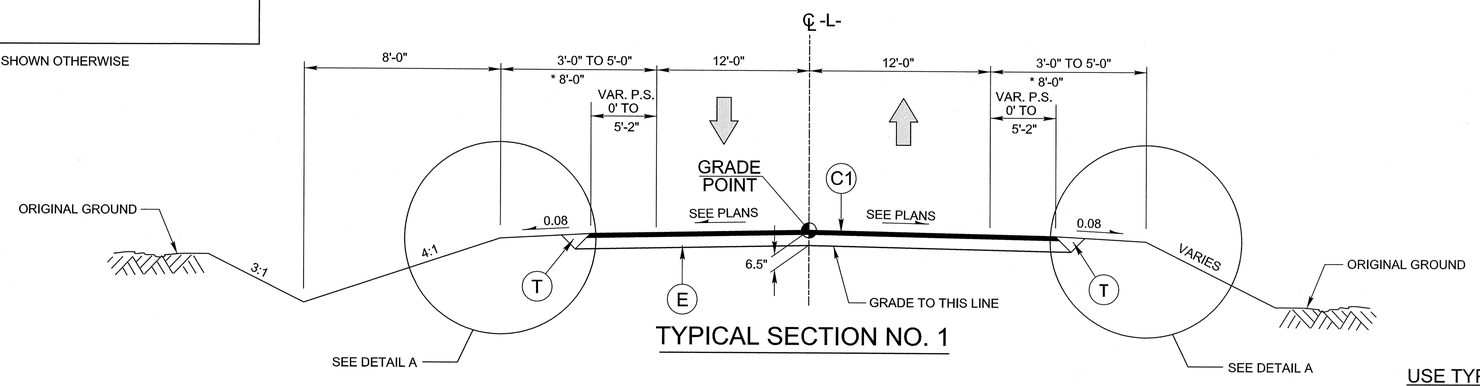

TYPICAL SECTION NO. 1

USE TYPICAL SECTION NO. 1 FROM:
-L- STA. 14+50.00 TO -L- STA. 18+00 +/- (BEGIN BRIDGE)
-L- STA. 19+25 +/- (END BRIDGE) TO -L- STA. 24+00.00

TRANSITION TYPICAL SECTION NO. 1 TO EXISTING FROM
-L- STA. 14+00 TO -L- STA. 14+50

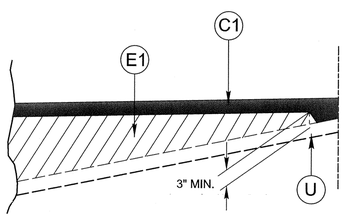

DETAIL SHOWING METHOD OF WEDGING

SEE TYPICAL SECTIONS

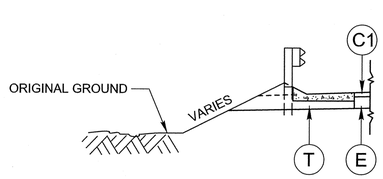

DETAIL A

SHOULDER BERM GUTTER LOCATIONS

-L- STA. 17+63.0 TO -L- STA. 17+89.0 LT
-L- STA. 17+50.0 TO -L- STA. 17+89.0 RT

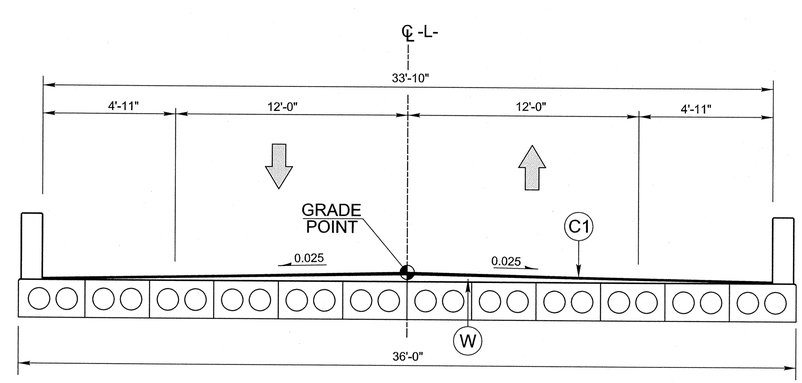

TYPICAL SECTION NO. 2

CORED SLAB BRIDGE OVERLAY

USE TYPICAL SECTION NO. 2 FROM:
-L- STA. 18+00 +/- TO -L- STA. 19+25 +/-

NOTES: * SHOULDER WIDTH INCREASED 3' WITH THE USE OF GUARDRAIL

REVISIONS

12/18/2013
3:25:13 PM
...\Roadway\Proj\B4708_rdy_typ.dgn

HNTB
HNTB NORTH CAROLINA, P.C.
343 E. Six Forks Road, Suite 200
Raleigh, North Carolina 27609
NC License No: C-1554

PROJECT REFERENCE NO.	SHEET NO.
B-4708	3
R/W SHEET NO.	
ROADWAY DESIGN ENGINEER	HYDRAULICS ENGINEER

NORTH CAROLINA PROFESSIONAL SEAL 19824 ENGINEER RICHARD O. ROGERS
12/19/13

ROW AREA DATA SUMMARY

PARCEL NO.	PROPERTY OWNERS NAMES	TOTAL ACREAGE	AREA TAKEN	AREA REMAINING RT.	AREA REMAINING LT.	CONST. EASE.	PERM. DRAIN. EASE.	TEMP. DRAIN. EASE.
1	PIERRE L. DANSEREAU	–	2703.7 SF					
2	ANGELA F. THOMPKINS, ET VIR	–	3052.2 SF			3616.9 SF		
3	ELIZABETH POWELL SPAIN	–	0.19 AC					
4	ROBIN R. MOORE	–	3326.6 SF			588.3 SF		

SUMMARY OF EARTHWORK
IN CUBIC YARDS

STATION	STATION	UNCLASSIFIED EXCAVATION	EMBANK. +%	BORROW	WASTE
–L– STA. 14+00.00	–L– STA. 18+18.00	204	1009	805	
–L– STA. 15+17.00	–L– STA. 17+00.00	209	2073	1864	
PROJECT SUBTOTAL		413	3082	2669	
WASTE TO REPLACE BORROW					
PROJECT TOTAL		413	3082	2669	
EST. 5% TO REPLACE TOP SOIL ON BORROW PIT				133	
GRAND TOTALS:		413		2802	
SAY:		420		2810	

DRAINAGE SUMMARY

STATION / SIZE / THICKNESS OR GAUGE	LOCATION (LT,RT, OR CL)	STRUCTURE NO. FROM	STRUCTURE NO. TO	TOP ELEVATION	INVERT ELEVATION	INVERT ELEVATION	SLOPE CRITICAL	CLASS IV R.C. PIPE (UNLESS NOTED OTHERWISE) 15"	18"	24"	QUANTITIES FOR DRAINAGE STRUCTURES PER EACH (0 THRU 5.0')	TOTAL L.F. FOR PAY QUANTITY SHALL BE COL.'A' + (1.3 X COL. 'B') A: 5.0' THRU 10.0'	B: 10.0' AND ABOVE	SIDE DRAIN PIPE 15"	18"	24"	GRATED D.I., TYPE 'B' STD. 840.36	T.B.D.I. FRAME AND GRATE STD. 840.37		REMARKS
–L– 17+65.0	LT	0401	0402	17.37	14.62	14.04		32			1						1	1		
–L– 17+65.0	RT	0402	0403	17.37	14.04	12.84		12			1						1	1		
–L– 17+52.0	RT	0403	OUT	17.45	12.84	12.74		20			1						1	1		
–L– 14+20.0	RT															44				REMOVE 44 LF OF EXISTING PIPE
–L– 16+53.0	RT															36				REMOVE 24 LF OF EXISTING PIPE
TOTAL								64			3					80	3	3		

ABBREVIATIONS

C.B.	CATCH BASIN
N.D.I.	NARROW DROP INLET
D.I.	DROP INLET
M.D.I.	MEDIAN DROP INLET
M.D.I. (N.S.)	MEDIAN DROP INLET (NARROW SLOT)
J.B.	JUNCTION BOX
M.H.	MANHOLE
T.B.D.I.	TRAFFIC BEARING DROP INLET
T.B.J.B.	TRAFFIC BEARING JUCTION BOX

PAVEMENT REMOVAL SUMMARY
IN SQUARE YARDS

LOCATION	REMOVAL OF ASPHALT PAVEMENT	BREAKING OF ASPHALT PAVEMENT
-L- STA. 14+00 TO 16+00	525	
-L- STA. 16+00 TO 18+18		585
-L- STA. 19+07 TO 22+00		787
-L- STA. 22+00 TO 24+00	539	539
GRAND TOTAL	1064	1372
SAY	1070	1380

GUARDRAIL SUMMARY

SURVEY LINE	BEG. STA.	END STA.	LOCATION	LENGTH: STRAIGHT	SHOP CURVED	DOUBLE FACED	WARRANT POINT: APPROACH END	TRAILING END	"N" DIST. FROM E.O.L.	TOTAL SHOULDER WIDTH	FLARE LENGTH: APPROACH END	TRAILING END	W: APPROACH END	TRAILING END	ANCHORS: XI MOD	XI	GRAU 350	TYPE 350 (TL-3)	XIII	CAT-1	III	BIC	AT-1	IMPACT ATTENUATOR TYPE 350: EA	G	NG	SINGLE FACED GUARDRAIL	REMOVE EXISTING GUARDRAIL	REMOVE AND STOCKPILE EXISTING GUARDRAIL	REMARKS
–L–	14+43.00	16+38.00	RT	200.0			14+43.00		4	7	50		1					1					1							
–L–	16+77.26	18+00.00	RT	125.0			16+77.26		5	8	50		1					1			1									
–L–	16+98.18	18+00.00	LT	100.0				16+98.18	5	8		50		1				1			1									
–L–	19+25.00	20+26.45	RT	100.0				20+26.45	5	8		50		1				1			1									
–L–	19+25.00	23+53.85	LT	437.5			23+53.85		5	8	50		1					1			1									
	LESS ANCHOR DEDUCTIONS																													
	TYPE 350, TL-3	5 @ 50.00'	=	250.0																										
	TYPE III	4 @ 18.75'	=	75.0																										
	AT-1	1 @ 6.25'	=	6.25																										
			TOTAL	631.25														5			4		1							
			SAY	650																										
	(5 ADDITIONAL GUARDRAIL POST)																													

REVISIONS

12/18/2013
3:13:59 PM
...\Roadway\Proj\B4708_rdy_sum.dgn

HNTB NORTH CAROLINA, P.C.
343 E. Six Forks Road, Suite 200
Raleigh, North Carolina 27609
NC License No: C-1554

PROJECT REFERENCE NO.	SHEET NO.
B-4708	4
R/W SHEET NO.	
ROADWAY DESIGN ENGINEER	HYDRAULICS ENGINEER

12/19/13 — 12/19/13

PLAN

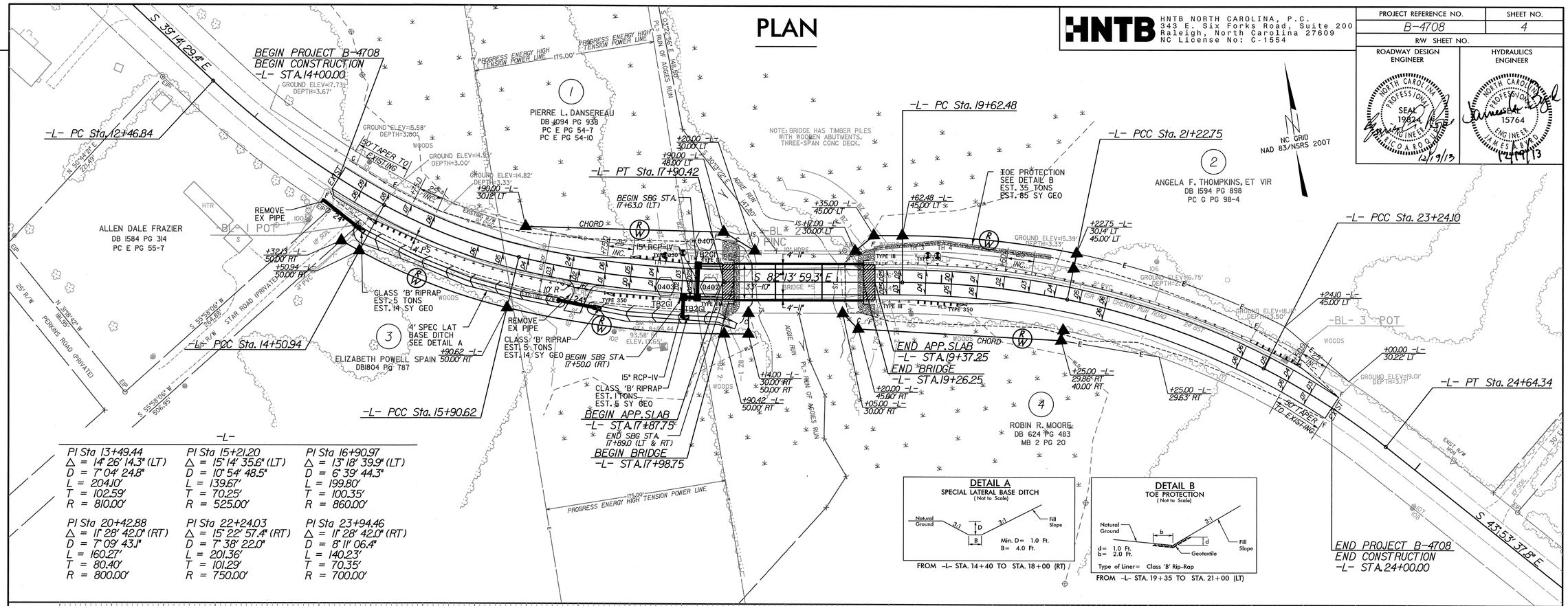

-L-

PI Sta 13+49.44	PI Sta 15+21.20	PI Sta 16+90.97
Δ = 14° 26' 14.3" (LT)	Δ = 15° 14' 35.6" (LT)	Δ = 13° 18' 39.9" (LT)
D = 7° 04' 24.8"	D = 10° 54' 48.5"	D = 6° 39' 44.3"
L = 204.10'	L = 139.67'	L = 199.80'
T = 102.59'	T = 70.25'	T = 100.35'
R = 810.00'	R = 525.00'	R = 860.00'
PI Sta 20+42.88	PI Sta 22+24.03	PI Sta 23+94.46
Δ = 11° 28' 42.0" (RT)	Δ = 15° 22' 57.4" (RT)	Δ = 11° 28' 42.0" (RT)
D = 7° 09' 43.1"	D = 7° 38' 22.0"	D = 8° 11' 06.4"
L = 160.27'	L = 201.36'	L = 140.23'
T = 80.40'	T = 101.29'	T = 70.35'
R = 800.00'	R = 750.00'	R = 700.00'

DETAIL A
SPECIAL LATERAL BASE DITCH
(Not to Scale)

FROM -L- STA. 14+40 TO STA. 18+00 (RT)

DETAIL B
TOE PROTECTION
(Not to Scale)

FROM -L- STA. 19+35 TO STA. 21+00 (LT)

PROFILE

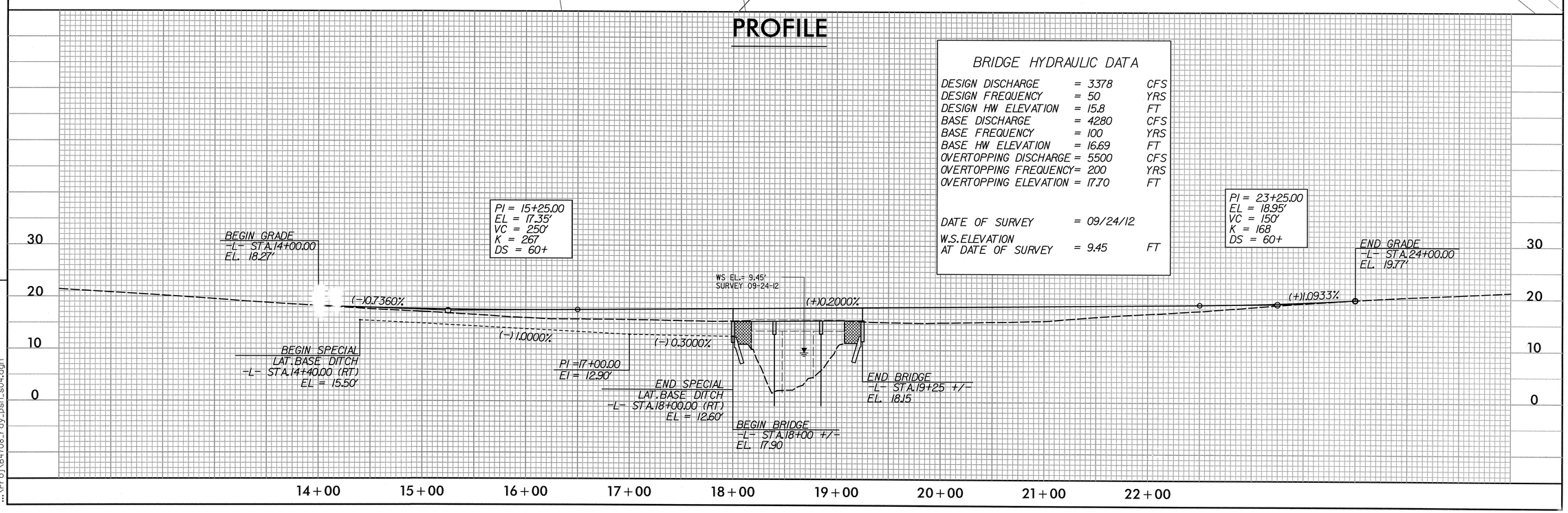

BRIDGE HYDRAULIC DATA

DESIGN DISCHARGE	= 3378	CFS
DESIGN FREQUENCY	= 50	YRS
DESIGN HW ELEVATION	= 15.8	FT
BASE DISCHARGE	= 4280	CFS
BASE FREQUENCY	= 100	YRS
BASE HW ELEVATION	= 16.69	FT
OVERTOPPING DISCHARGE	= 5500	CFS
OVERTOPPING FREQUENCY	= 200	YRS
OVERTOPPING ELEVATION	= 17.70	FT
DATE OF SURVEY	= 09/24/12	
W.S. ELEVATION AT DATE OF SURVEY	= 9.45	FT

REVISIONS

12/18/2013
3:43:48 PM
...\Proj\B4708_rdy_psh_s04.dgn

STATE OF NORTH CAROLINA
DIVISION OF HIGHWAYS

TRANSPORTATION MANAGEMENT PLAN

BEAUFORT COUNTY

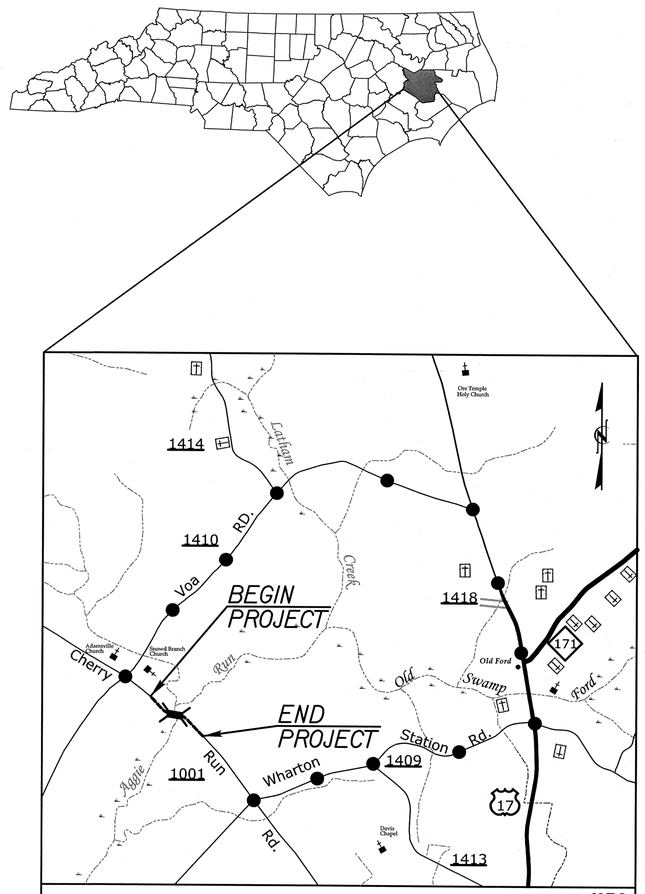

N.T.S.

VICINITY MAP ●●● DETOUR ROUTE

INDEX OF SHEETS

SHEET NO.	TITLE
TMP-1	TITLE SHEET WITH VICINTY MAP, INDEX OF SHEETS, LIST OF APPLICABLE ROADWAY STANDARD DRAWINGS, AND LEGEND
TMP-2	GENERAL NOTES, DETOUR AND PLAN.

ROADWAY STANDARD DRAWINGS

THE FOLLOWING ROADWAY STANDARDS AS SHOWN IN "ROADWAY STANDARD DRAWINGS" PROJECT SERVICES UNIT - N.C. DEPARTMENT OF TRANSPORTATION - RALEIGH, N.C. DATED JAN 2012 ARE APPLICABLE TO THIS PROJECT AND BY REFERENCE HEREBY ARE CONSIDERED A PART OF THESE PLANS:

	TITLE
1101.11	TRAFFIC CONTROL DESIGN TABLES
1110.01	STATIONARY WORK ZONE SIGNS
1145.01	BARRICADES

LEGEND

GENERAL

- DIRECTION OF TRAFFIC FLOW
- DIRECTION OF PEDESTRIAN TRAFFIC FLOW
- EXIST. PVMT.
- NORTH ARROW
- PROPOSED PVMT.
- WORK AREA

TRAFFIC CONTROL DEVICES

- BARRICADE (TYPE III)

HNTB
HNTB NORTH CAROLINA, P.C.
343 E. Six Forks Road, Suite 200
Raleigh, North Carolina 27609
NC License No: C-1554

R. B. EARLY, PE — *TRAFFIC CONTROL PROJECT ENGINEER*

J. A. PHILLIPS — *TRAFFIC CONTROL DESIGN ENGINEER*

APPROVED: Rhonda B. Early
DATE: 12-18-13

SEAL NORTH CAROLINA PROFESSIONAL SEAL 023521 ENGINEER RHONDA B. EARLY

SHEET NO.
TMP-1

B-4708

TIP PROJECT:

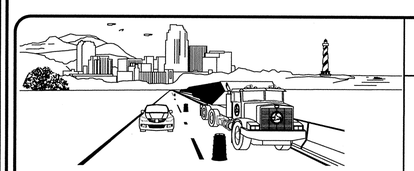

WORK ZONE SAFETY & MOBILITY
"from the MOUNTAINS to the COAST"

N.C.D.O.T. WORK ZONE TRAFFIC CONTROL
1561 MAIL SERVICE CENTER (MSC) RALEIGH, NC 27699-1561
750 N. GREENFIELD PARKWAY, GARNER, NC 27529 (DELIVERY)
PHONE: (919) 773-2800 FAX: (919) 771-2745

STEVEN J. HAMILTON, PE *DIVISION TRAFFIC ENGINEER*

DIVISION OF HIGHWAYS * STATE OF NORTH CAROLINA * DEPARTMENT OF TRANSPORTATION * WORK ZONE TRAFFIC CONTROL

10:36:56 AM
...\TCP\B-4708_tc_TCP_01_title.dgn
$$$$USERNAME$$$$

PROJ. REFERENCE NO.	SHEET NO.
B-4807	TMP-2

GENERAL NOTES

IMPLEMENT TRAFFIC CONTROL IN ACCORDANCE WITH THE ROADWAY STANDARD DRAWINGS LISTED ON TMP-1.

CHANGES MAY BE REQUIRED WHEN PHYSICAL DIMENSIONS IN THE DETAIL DRAWINGS, STANDARD DETAILS AND ROADWAY DETAILS ARE NOT ATTAINABLE TO MEET FIELD CONDITIONS, OR RESULT IN DUPLICATE, OR UNDESIRED OVERLAPPING, OF DEVICES. MODIFICATIONS MAY INCLUDE: MOVING, SUPPLEMENTING, COVERING OR REMOVAL OF DEVICES, AS DIRECTED BY THE ENGINEER.

STATE FORCES WILL INSTALL AND MAINTAIN THE PROJECT DETOUR AND THE TYPE III BARRICADES AT THE PROJECT LIMITS.
STATE FORCES WILL INSTALL MARKINGS AND MARKERS ON THE FINISHED PROJECT.
CALL JIM EVANS AT 252-830-3493 FOR COORDINATION.

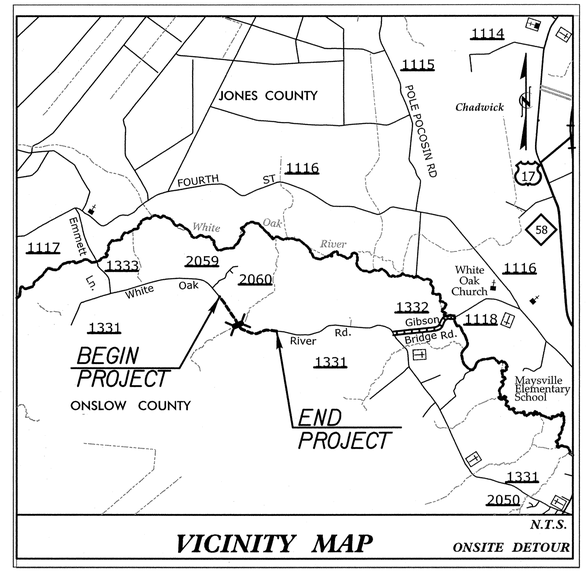

N.T.S.

VICINITY MAP — *ONSITE DETOUR*

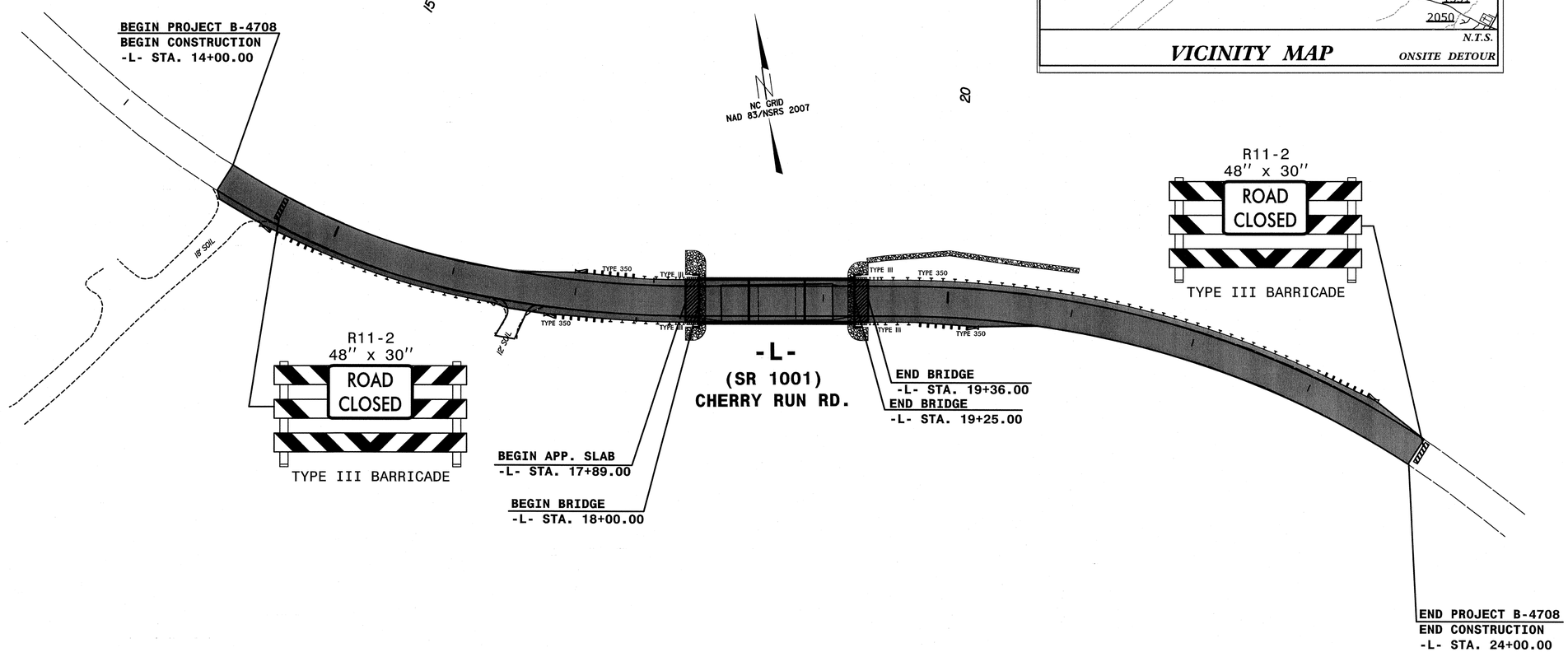

HNTB
HNTB NORTH CAROLINA, P.C.
343 E. Six Forks Road, Suite 200
Raleigh, North Carolina 27609
NC License No: C-1554

APPROVED: Rhonda B. Early DATE: 12-18-13

SEAL — NORTH CAROLINA PROFESSIONAL SEAL 023521 ENGINEER RHONDA B. EARLY

DIVISION OF HIGHWAYS — STATE OF NORTH CAROLINA — DEPARTMENT OF TRANSPORTATION — WORK ZONE TRAFFIC CONTROL

TRANSPORTATION MANAGEMENT PLAN

GENERAL NOTES, DETOUR AND PLAN

REVISIONS

QAQC STAGE:
REVIEW:
CONCUR:
REVISE:
VERIFY:

10:38:57 AM
$$$$USERNAME$$$$
$$$$USERNAME$$$$

8/17/99

PROJECT: B-4708

TIP P

STATE	STATE PROJECT REFERENCE NO.	SHEET NO.	TOTAL SHEETS
N.C.	B-4708	EC-1	6

STATE PROJ. NO.	F. A. PROJ. NO.	DESCRIPTION

STATE OF NORTH CAROLINA
DIVISION OF HIGHWAYS

PLAN FOR PROPOSED
HIGHWAY EROSION CONTROL

LOCATION: BEAUFORT COUNTY BRIDGE NO. 005 OVER AGGIE RUN ON SR 1001 (CHERRY RUN RD.)

TYPE OF WORK: GRADING, PAVING, DRAINAGE & STRUCTURE.

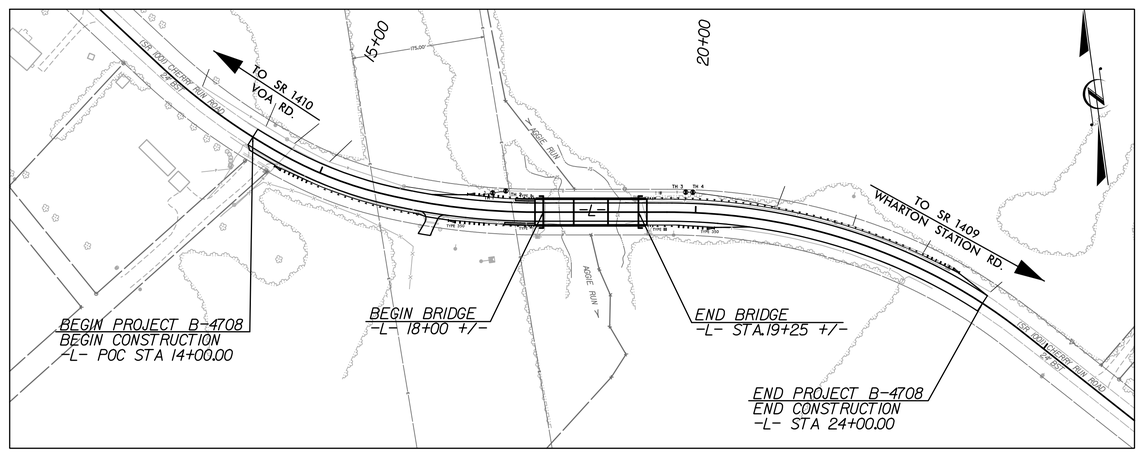

EROSION AND SEDIMENT CONTROL MEASURES

Std. #	Description	Symbol
1630.03	Temporary Silt Ditch	TSD
1630.05	Temporary Diversion	TD
1605.01	Temporary Silt Fence	
1606.01	Special Sediment Control Fence	
1622.01	Temporary Berms and Slope Drains	
	Silt Basin Type B	
1633.01	Temporary Rock Silt Check Type-A	
	Temporary Rock Silt Check Type-A with Matting and Polyacrylamide (PAM)	
	Temporary Rock Silt Check Type-B	
	Wattle/ Coir Fiber Wattle	
	Wattle/ Coir Fiber Wattle with Polyacrylamide (PAM)	
1634.01	Temporary Rock Sediment Dam Type-A	
1634.02	Temporary Rock Sediment Dam Type-B	
1635.01	Rock Pipe Inlet Sediment Trap Type-A	
1635.02	Rock Pipe Inlet Sediment Trap Type-B	
1630.04	Stilling Basin	
1630.06	Special Stilling Basin	
	Rock Inlet Sediment Trap:	
1632.01	Type A	A
1632.02	Type B	B
1632.03	Type C	C
	Skimmer Basin	
	Tiered Skimmer Basin	
	Infiltration Basin	

THIS PROJECT HAS BEEN DESIGNED TO SENSITIVE WATERSHED STANDARDS.

ENVIRONMENTALLY SENSITIVE AREA(S) EXIST ON THIS PROJECT

Refer To E. C. Special Provisions for Special Considerations.

GRAPHIC SCALE

0
PLANS

0
PROFILE (HORIZONTAL)

0
PROFILE (VERTICAL)

ROADSIDE ENVIRONMENTAL UNIT
DIVISION OF HIGHWAYS
STATE OF NORTH CAROLINA

THESE EROSION AND SEDIMENT CONTROL PLANS COMPLY WITH THE REGULATIONS SET FORTH BY THE NCG-010000 GENERAL CONSTRUCTION PERMIT EFFECTIVE AUGUST 3, 2011 ISSUED BY THE NORTH CAROLINA DEPARTMENT OF ENVIRONMENT AND NATURAL RESOURCES DIVISION OF WATER QUALITY.

Prepared In the Office of:

HNTB
HNTB NORTH CAROLINA, P.C.
343 E. Six Forks Road, Suite 200
Raleigh, North Carolina 27609
NC License No: C-1554

2012 STANDARD SPECIFICATIONS

BENTON R. CARROLL, E.I
EROSION CONTROL
LEVEL III
CERTIFICATION #3180

Roadway Standard Drawings

The following roadway english standards as appear in "Roadway Standard Drawings"- Roadway Design Unit - N. C. Department of Transportation - Raleigh, N. C., dated January 2012 and the latest revison thereto are applicable to this project and by reference hereby are considered a part of these plans.

1604.01	Railroad Erosion Control Detail	1632.01	Rock Inlet Sediment Trap Type A
1605.01	Temporary Silt Fence	1632.02	Rock Inlet Sediment Trap Type B
1606.01	Special Sediment Control Fence	1632.03	Rock Inlet Sediment Trap Type C
1607.01	Gravel Construction Entrance	1633.01	Temporary Rock Silt Check Type A
1622.01	Temporary Berms and Slope Drains	1633.02	Temporary Rock Silt Check Type B
1630.01	Riser Basin	1634.01	Temporary Rock Sediment Dam Type A
1630.02	Silt Basin Type B	1634.02	Temporary Rock Sediment Dam Type B
1630.03	Temporary Silt Ditch	1635.01	Rock Pipe Inlet Sediment Trap Type A
1630.04	Stilling Basin	1635.02	Rock Pipe Inlet Sediment Trap Type B
1630.05	Temporary Diversion	1640.01	Coir Fiber Baffle
1630.06	Special Stilling Basin	1645.01	Temporary Stream Crossing
1631.01	Matting Installation		

11:52:35 PM
$$$$USERNAME$$$$

PROJECT REFERENCE NO.	SHEET NO.
B-4708	EC-2

COIR FIBER WATTLE WITH POLYACRYLAMIDE (PAM) DETAIL

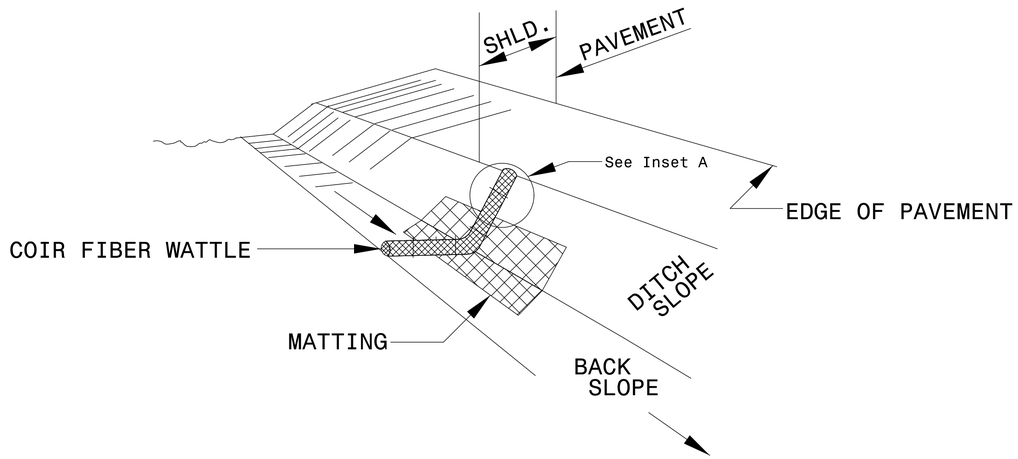

ISOMETRIC VIEW

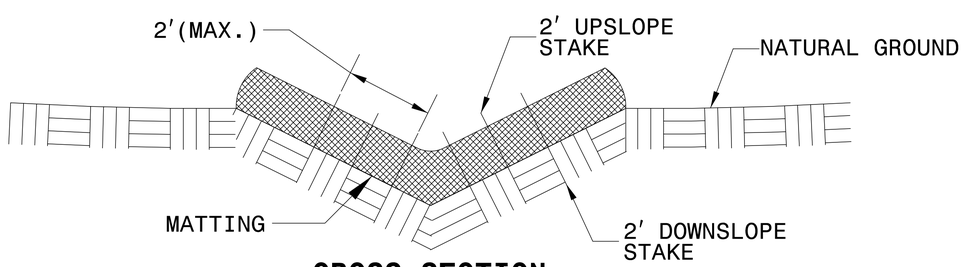

CROSS SECTION VEE DITCH

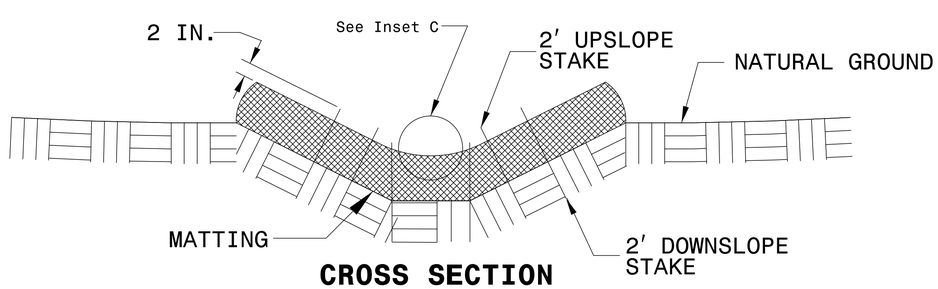

CROSS SECTION TRAPEZOIDAL DITCH

NOTES:

USE MINIMUM 12 IN. DIAMETER COIR FIBER (COCONUT FIBER) WATTLE.

USE 2 FT. WOODEN STAKES WITH A 2 IN. BY 2 IN. NOMINAL CROSS SECTION.

ONLY INSTALL WATTLE(S) TO A HEIGHT IN DITCH SO FLOW WILL NOT WASH AROUND WATTLE AND SCOUR DITCH SLOPES AND AS DIRECTED.

INSTALL A MINIMUM OF 2 UPSLOPE STAKES AND 4 DOWNSLOPE STAKES AT AN ANGLE TO WEDGE WATTLE TO BOTTOM OF DITCH.

PROVIDE STAPLES MADE OF 0.125 IN. DIAMETER STEEL WIRE FORMED INTO A U SHAPE NOT LESS THAN 12" IN LENGTH.

INSTALL STAPLES APPROXIMATELY EVERY 1 LINEAR FOOT ON BOTH SIDES OF WATTLE AND AT EACH END TO SECURE IT TO THE SOIL.

INSTALL MATTING IN ACCORDANCE WITH SECTION 1631 OF THE STANDARD SPECIFICATIONS.

PRIOR TO POLYACRYLAMIDE (PAM) APPLICATION, OBTAIN A SOIL SAMPLE FROM PROJECT LOCATION, AND FROM OFFSITE MATERIAL, AND ANALYZE FOR APPROPRIATE PAM FLOCCULANT TO BE APPLIED TO EACH WATTLE.

INITIALLY APPLY 2 OUNCES OF ANIONIC OR NEUTRALLY CHARGED PAM OVER WATTLE WHERE WATER WILL FLOW AND 1 OUNCE OF PAM ON MATTING ON EACH SIDE OF WATTLE. REAPPLY PAM AFTER EVERY RAINFALL EVENT THAT IS EQUAL TO OR EXCEEDS 0.50 IN.

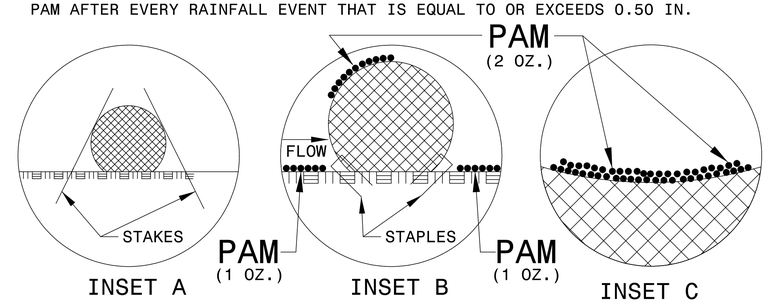

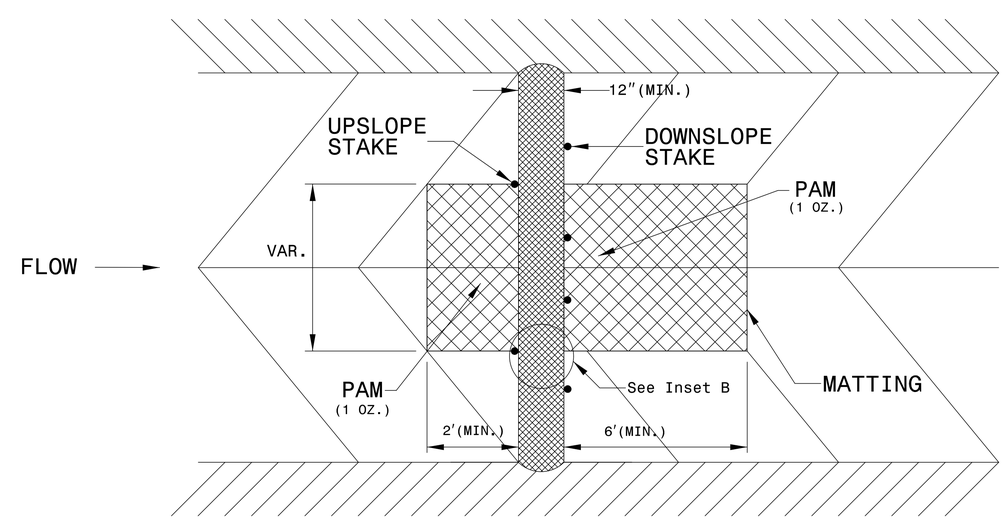

TOP VIEW

6/2/99

i:5326.DW
12/29/08
$$$$USERNAME$$$$
ec_detail.dgn

PROJECT REFERENCE NO.	SHEET NO.
B-4708	EC-3
R/W SHEET NO.	

SILT FENCE COIR FIBER WATTLE BREAK DETAIL

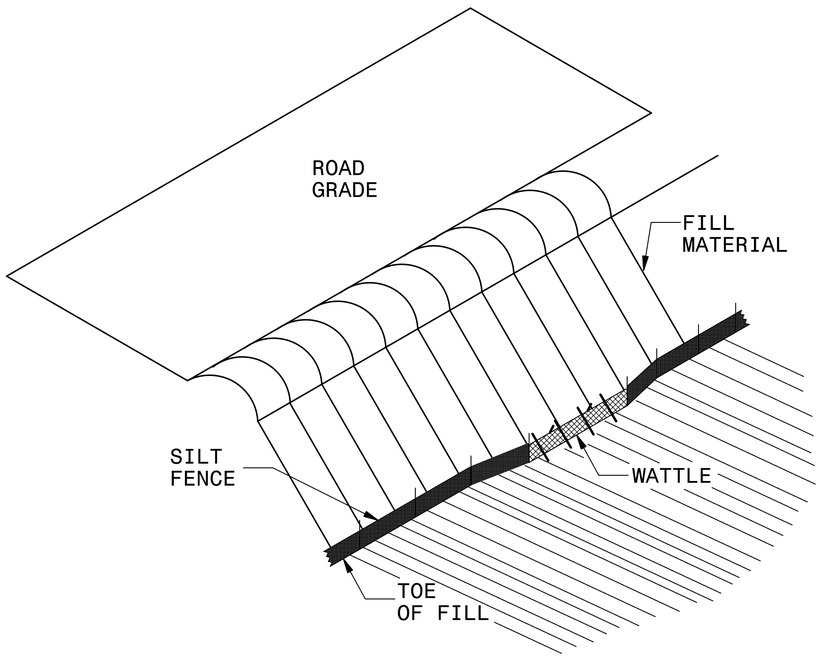

ISOMETRIC VIEW

NOTES:

USE MINIMUM 12 IN. DIAMETER COIR FIBER (COCONUT FIBER) WATTLE AND LENGTH OF 10 FT.

EXCAVATE A 1 TO 2 INCH TRENCH FOR WATTLE TO BE PLACED.

DO NOT PLACE WATTLE ON TOE OF SLOPE.

USE 2 FT. WOODEN STAKES WITH A 2 IN. BY 2 IN. NOMINAL CROSS SECTION.

INSTALL A MINIMUM OF 2 UPSLOPE STAKES AND 4 DOWNSLOPE STAKES AT AN ANGLE TO WEDGE WATTLE TO GROUND.

PROVIDE STAPLES MADE OF 0.125 IN. DIAMETER STEEL WIRE FORMED INTO A U SHAPE NOT LESS THAN 12″ IN LENGTH.

INSTALL STAPLES APPROXIMATELY EVERY 1 LINEAR FOOT ON BOTH SIDES OF WATTLE AND AT EACH END TO SECURE IT TO THE SOIL.

WATTLE INSTALLATION CAN BE ON OUTSIDE OF THE SILT FENCE AS DIRECTED.

INSTALL TEMPORARY SILT FENCE IN ACCORDANCE WITH SECTION 1605 OF THE STANDARD SPECIFICATIONS.

INSET A

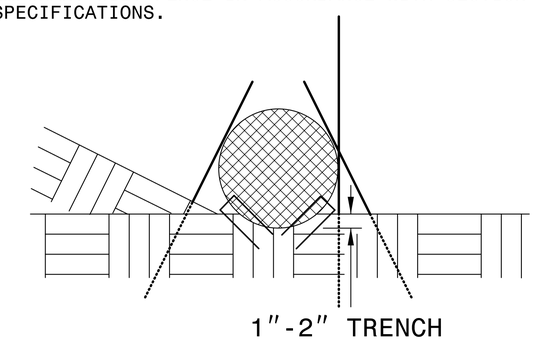

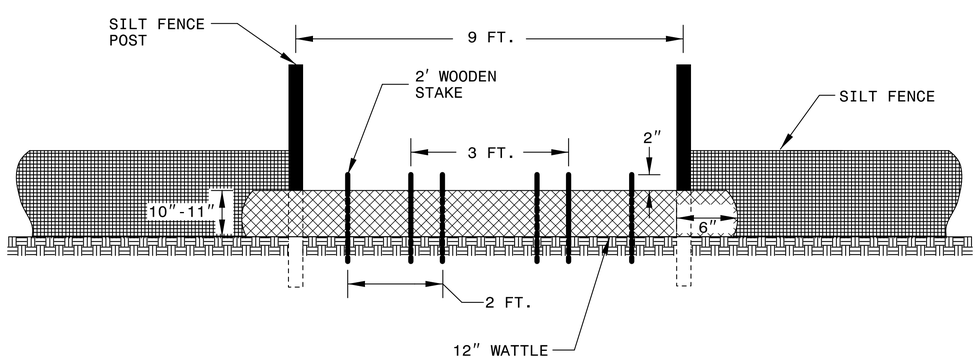

VIEW FROM SLOPE

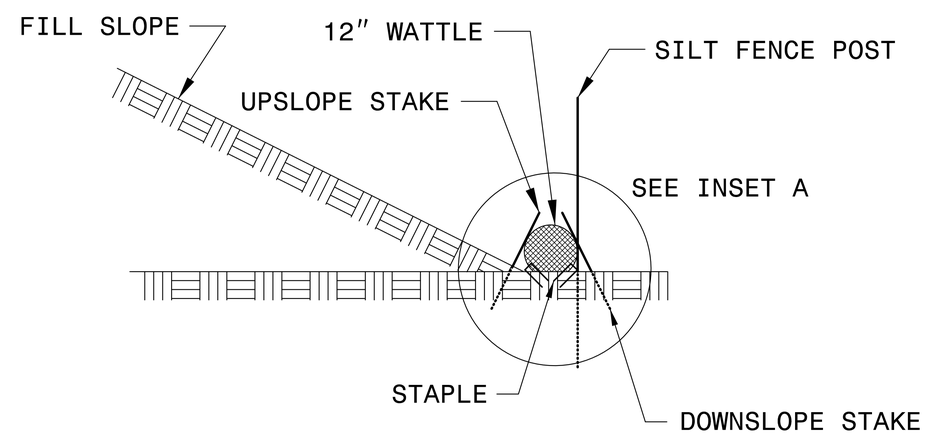

SIDE VIEW

PROJECT REFERENCE NO.	SHEET NO.
B-4708	EC-4
R/W SHEET NO.	

COIR FIBER WATTLE BARRIER DETAIL

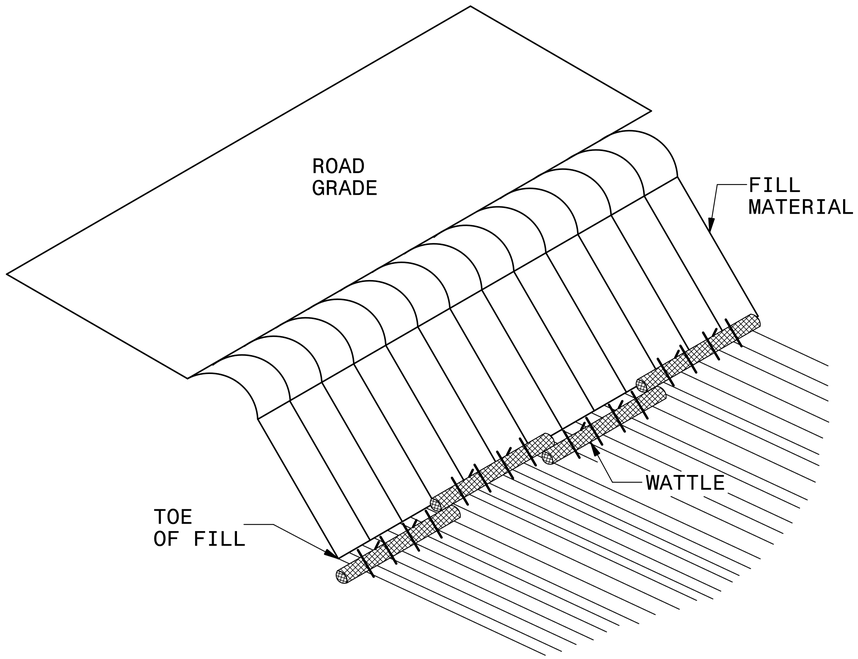

ISOMETRIC VIEW

NOTES:

USE MINIMUM 12 IN. DIAMETER COIR FIBER (COCONUT) WATTLE AND LENGTH OF 10 FT.

EXCAVATE A 1 TO 2 INCH TRENCH FOR WATTLE TO BE PLACED.

DO NOT PLACE WATTLES ON TOE OF SLOPE.

USE 2 FT. WOODEN STAKES WITH A 2 IN. BY 2 IN. NOMINAL CROSS SECTION.

INSTALL A MINIMUM OF 2 UPSLOPE STAKES AND 4 DOWNSLOPE STAKES AT AN ANGLE TO WEDGE WATTLE TO GROUND.

PROVIDE STAPLES MADE OF 0.125 IN. DIAMETER STEEL WIRE FORMED INTO A U SHAPE NOT LESS THAN 12″ IN LENGTH.

INSTALL STAPLES APPROXIMATELY EVERY 1 LINEAR FOOT ON BOTH SIDES OF WATTLE AND AT EACH END TO SECURE IT TO THE SOIL.

FOR BREAKS ALONG LARGE SLOPES, USE MAXIMUM SPACING OF 20 FT.

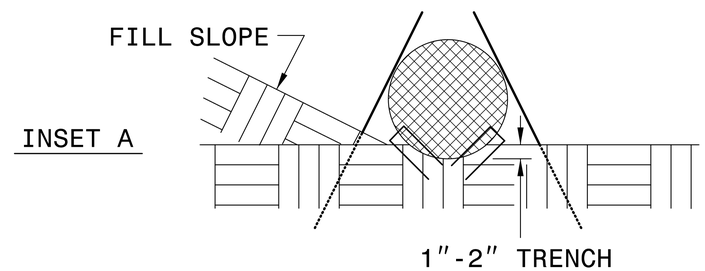

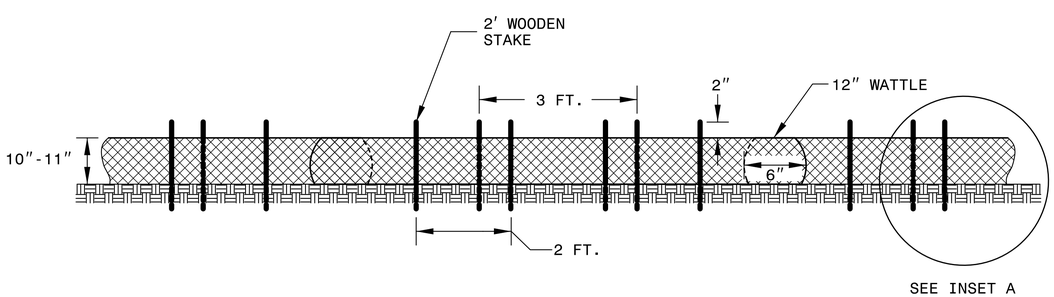

FRONT VIEW

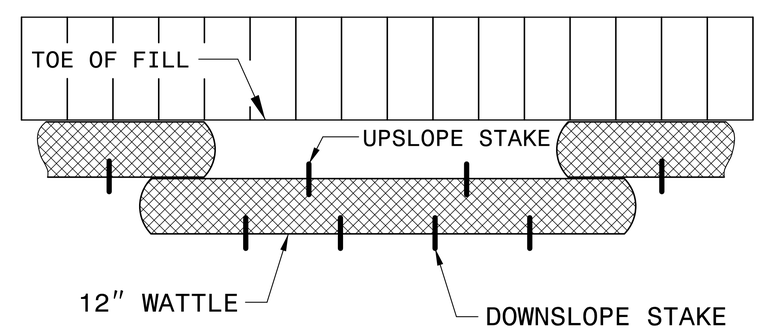

TOP VIEW

PROJECT REFERENCE NO.	SHEET NO.
B-4708	EC-5

DIVISION OF HIGHWAYS
STATE OF NORTH CAROLINA

SOIL STABILIZATION TIMEFRAMES

SITE DESCRIPTION	STABILIZATION TIME	TIMEFRAME EXCEPTIONS
PERIMETER DIKES, SWALES, DITCHES AND SLOPES	7 DAYS	NONE
HIGH QUALITY WATER (HQW) ZONES	7 DAYS	NONE
SLOPES STEEPER THAN 3:1	7 DAYS	IF SLOPES ARE 10' OR LESS IN LENGTH AND ARE NOT STEEPER THAN 2:1, 14 DAYS ARE ALLOWED.
SLOPES 3:1 OR FLATTER	14 DAYS	7 DAYS FOR SLOPES GREATER THAN 50' IN LENGTH.
ALL OTHER AREAS WITH SLOPES FLATTER THAN 4:1	14 DAYS	NONE, EXCEPT FOR PERIMETERS AND HQW ZONES.

PROJECT REFERENCE NO.	SHEET NO.
B-4708	EC-6
R/W SHEET NO.	

HNTB NORTH CAROLINA, P.C.
343 E. Six Forks Road, Suite 200
Raleigh, North Carolina 27609
NC License No: C-1554

BENTON R. CARROLL E.I.
EROSION CONTROL
LEVEL III
CERTIFICATION #3180

PLAN

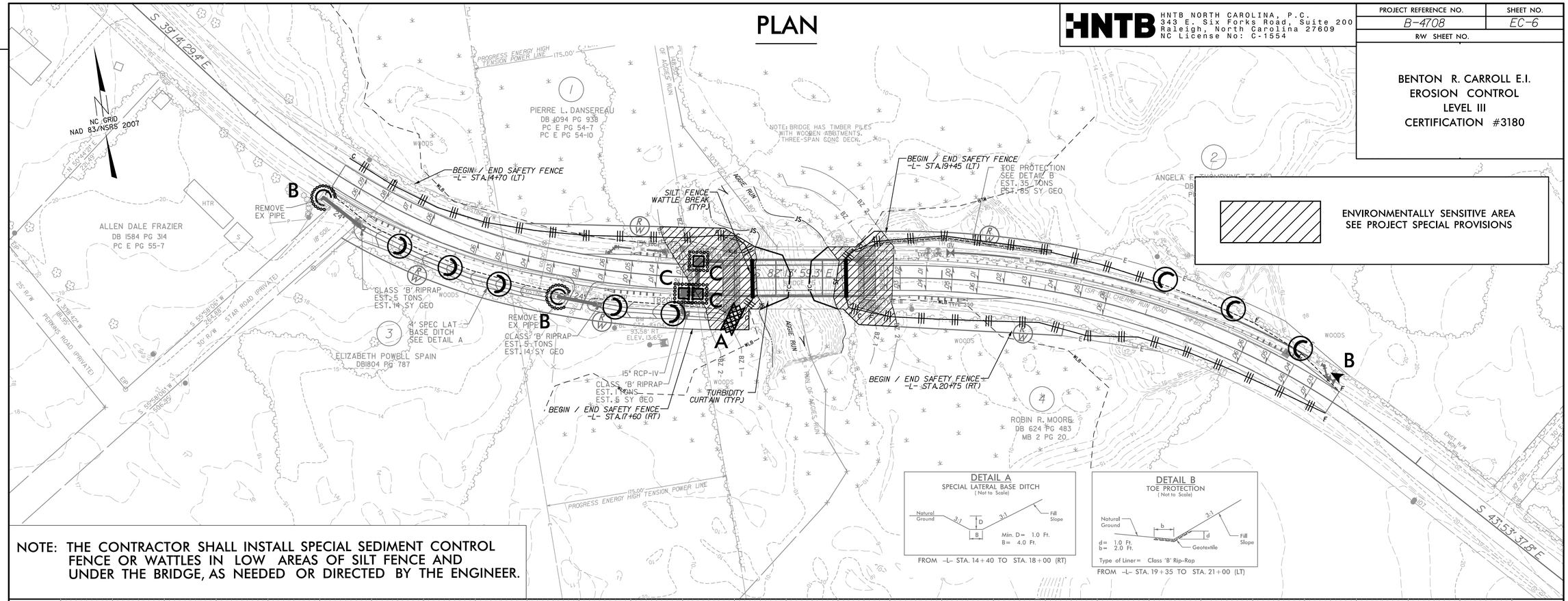

NOTE: THE CONTRACTOR SHALL INSTALL SPECIAL SEDIMENT CONTROL FENCE OR WATTLES IN LOW AREAS OF SILT FENCE AND UNDER THE BRIDGE, AS NEEDED OR DIRECTED BY THE ENGINEER.

DETAIL A
SPECIAL LATERAL BASE DITCH
(Not to Scale)

FROM -L- STA. 14+40 TO STA. 18+00 (RT)

DETAIL B
TOE PROTECTION
(Not to Scale)

FROM -L- STA. 19+35 TO STA. 21+00 (LT)

PROFILE

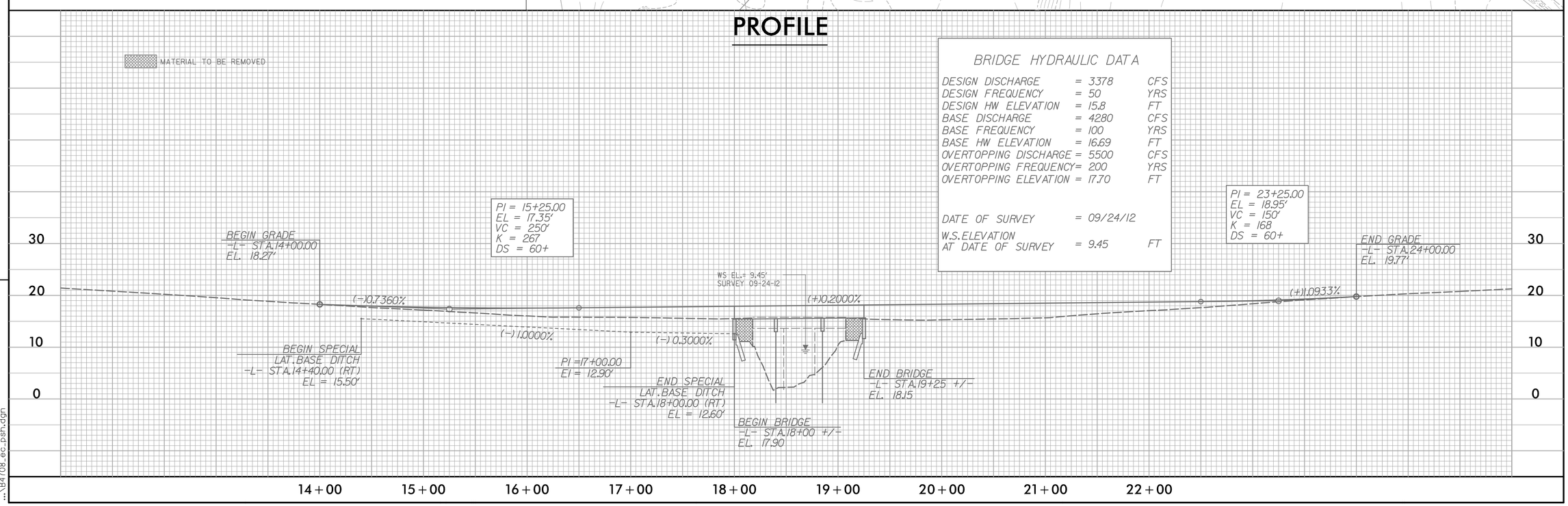

BRIDGE HYDRAULIC DATA

DESIGN DISCHARGE	= 3378	CFS
DESIGN FREQUENCY	= 50	YRS
DESIGN HW ELEVATION	= 15.8	FT
BASE DISCHARGE	= 4280	CFS
BASE FREQUENCY	= 100	YRS
BASE HW ELEVATION	= 16.69	FT
OVERTOPPING DISCHARGE	= 5500	CFS
OVERTOPPING FREQUENCY	= 200	YRS
OVERTOPPING ELEVATION	= 17.70	FT
DATE OF SURVEY	= 09/24/12	
W.S. ELEVATION AT DATE OF SURVEY	= 9.45	FT

REVISIONS

10/25/2013
2:00:43 PM
...\B4708_ec_psh.dgn

5/14/99

PROJECT REFERENCE NO.	SHEET NO.
B-4708	P-1
R/W SHEET NO.	

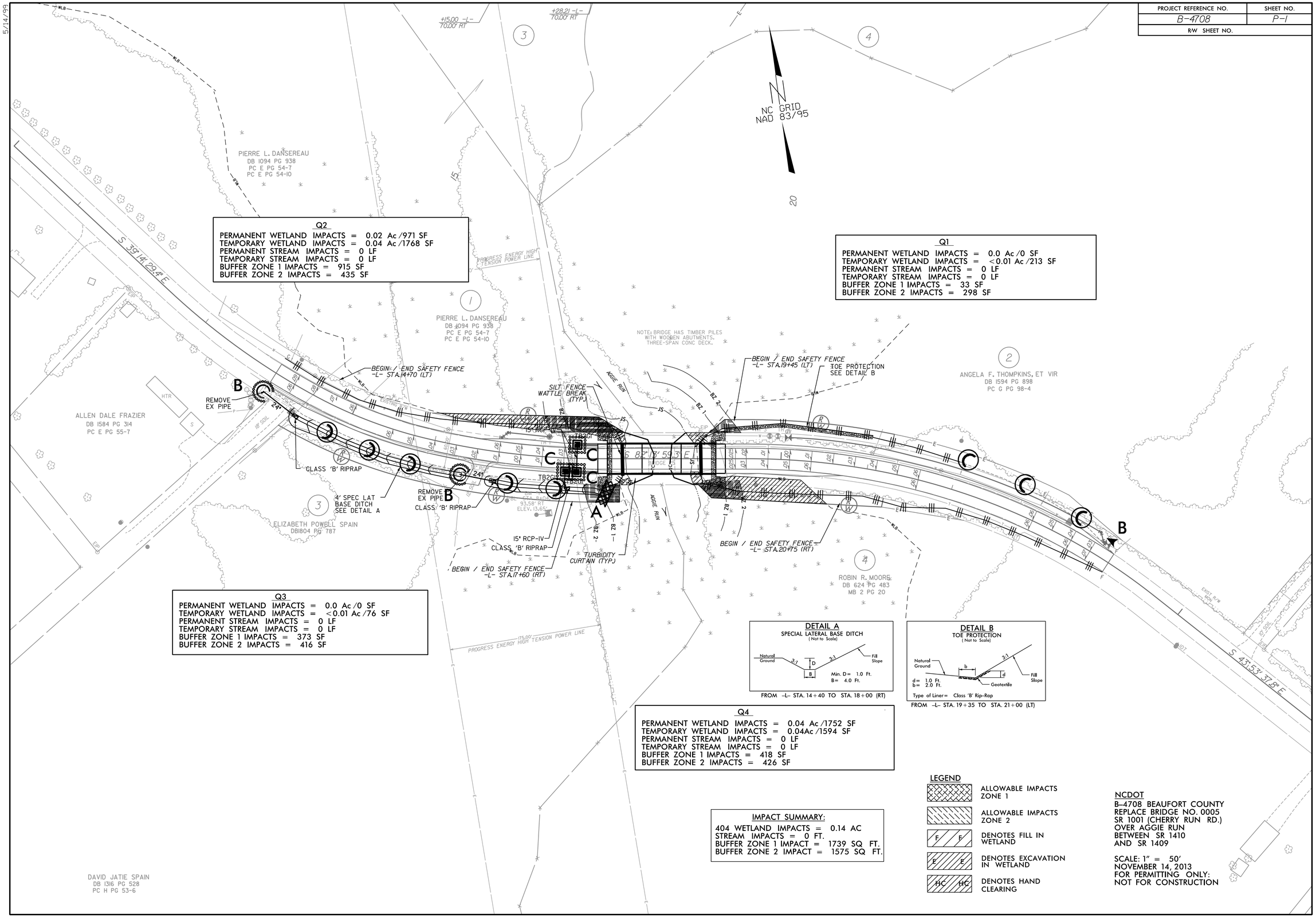

Note: Approximate quantities only. Unclassified Excavation, Borrow Excavation, Shoulder Borrow, Fine Grading, Clearing and Grubbing, Breaking of Existing Pavement, and Removal of Existing Pavement will be paid for at the contract lump sum price for "Grading."

STATE OF NORTH CAROLINA
DIVISION OF HIGHWAYS

CROSS–SECTION SUMMARY

IN CUBIC YARDS

NOTE: EMBANKMENT COLUMN DOES NOT INCLUDE BACKFILL FOR UNDERCUT

STATION	UNCLASSIFIED EXCAVATION	EMBANK.	UNDERCUT
–L– STA. 13+50.00	0	0	
–L– STA. 14+00.00	0	0	
–L– STA. 14+50.00	20	10	
–L– STA. 15+00.00	6	27	
–L– STA. 15+50.00	0	51	
–L– STA. 16+00.00	0	87	
–L– STA. 16+50.00	0	111	
–L– STA. 17+00.00	0	141	
–L– STA. 17+50.00	0	185	
–L– STA. 18+00.00	0	150	
–L– STA. 18+50.00	178	45	
–L– STA. 19+00.00	0	0	
–L– STA. 19+50.00	182	96	
–L– STA. 20+00.00	0	341	
–L– STA. 20+50.00	0	336	
–L– STA. 21+00.00	0	279	
–L– STA. 21+50.00	0	228	
–L– STA. 22+00.00	0	174	
–L– STA. 22+50.00	0	117	
–L– STA. 23+00.00	0	64	
–L– STA. 23+50.00	9	20	
–L– STA. 24+00.00	18	3	
–L– STA. 24+50.00	0	0	

02/03/98
7:05:22 PM
$$$$USERNAME$$$$ ...\Proposal\XSC\B4708_rdy_xpl.dgn

PROJ. REFERENCE NO.	SHEET NO.	TOTAL SHEETS
B-4708	X-2	9

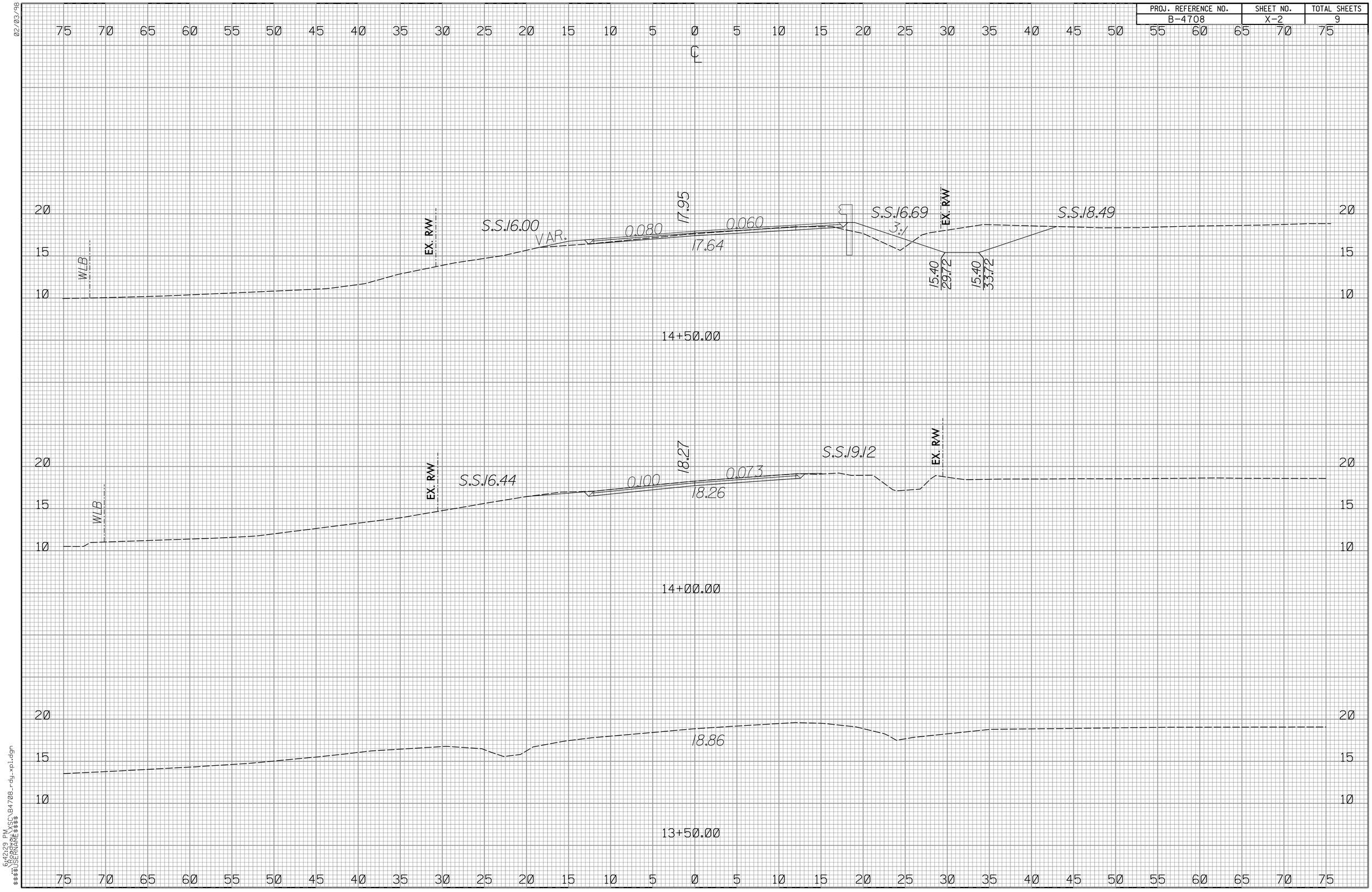

02/03/98

6:42:29 PM
$$$$USERNAME$$$$ ...Roadway\XSC\B4708-rdg-xpl.dgn

PROJ. REFERENCE NO.	SHEET NO.	TOTAL SHEETS
B-4708	X-3	9

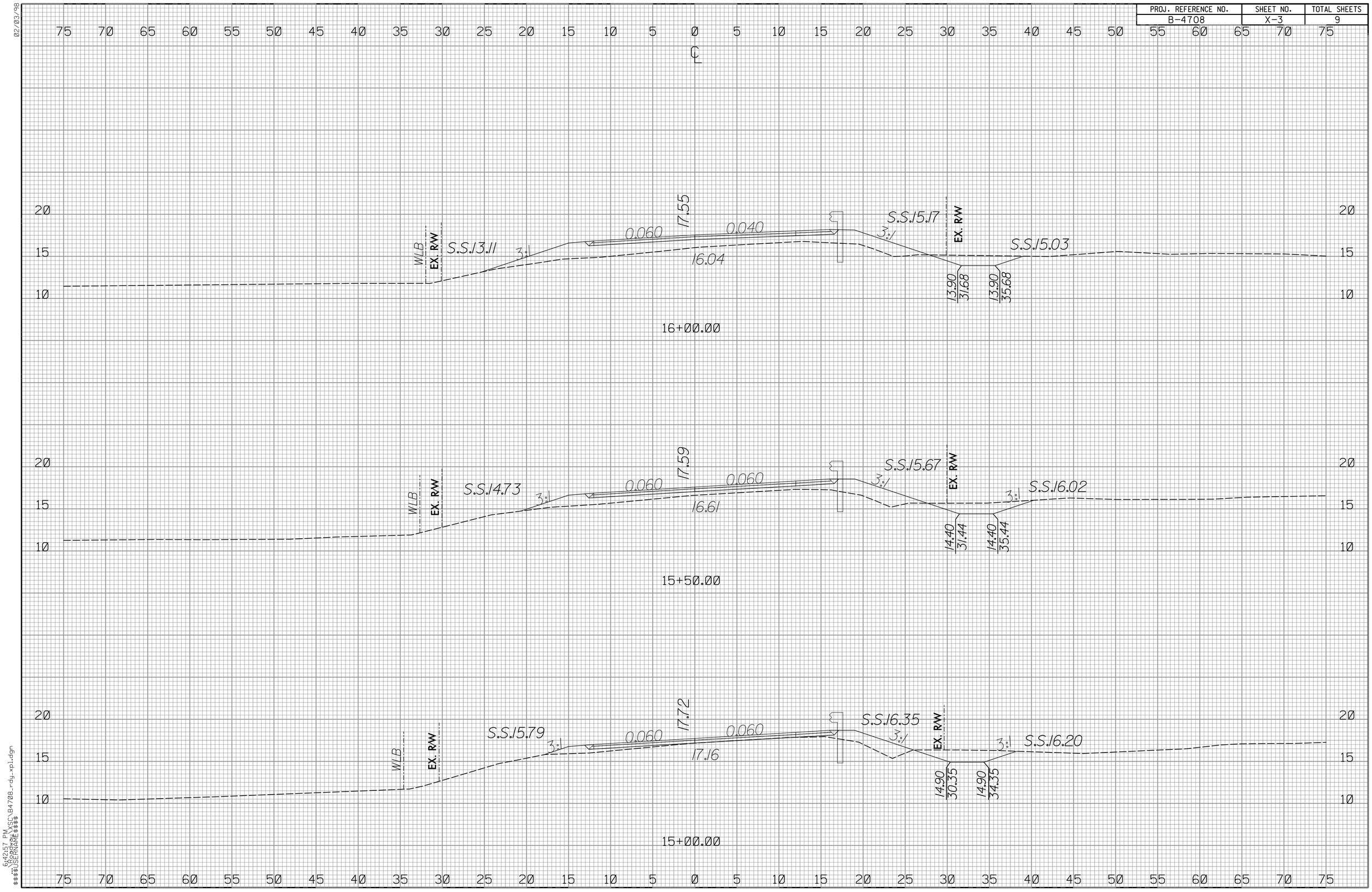

02/03/98

64257 PM
$$$$USERNAME$$$$ Roadway\XSC\B4708-rdg-xpl.dgn

PROJ. REFERENCE NO.	SHEET NO.	TOTAL SHEETS
B-4708	X-4	9

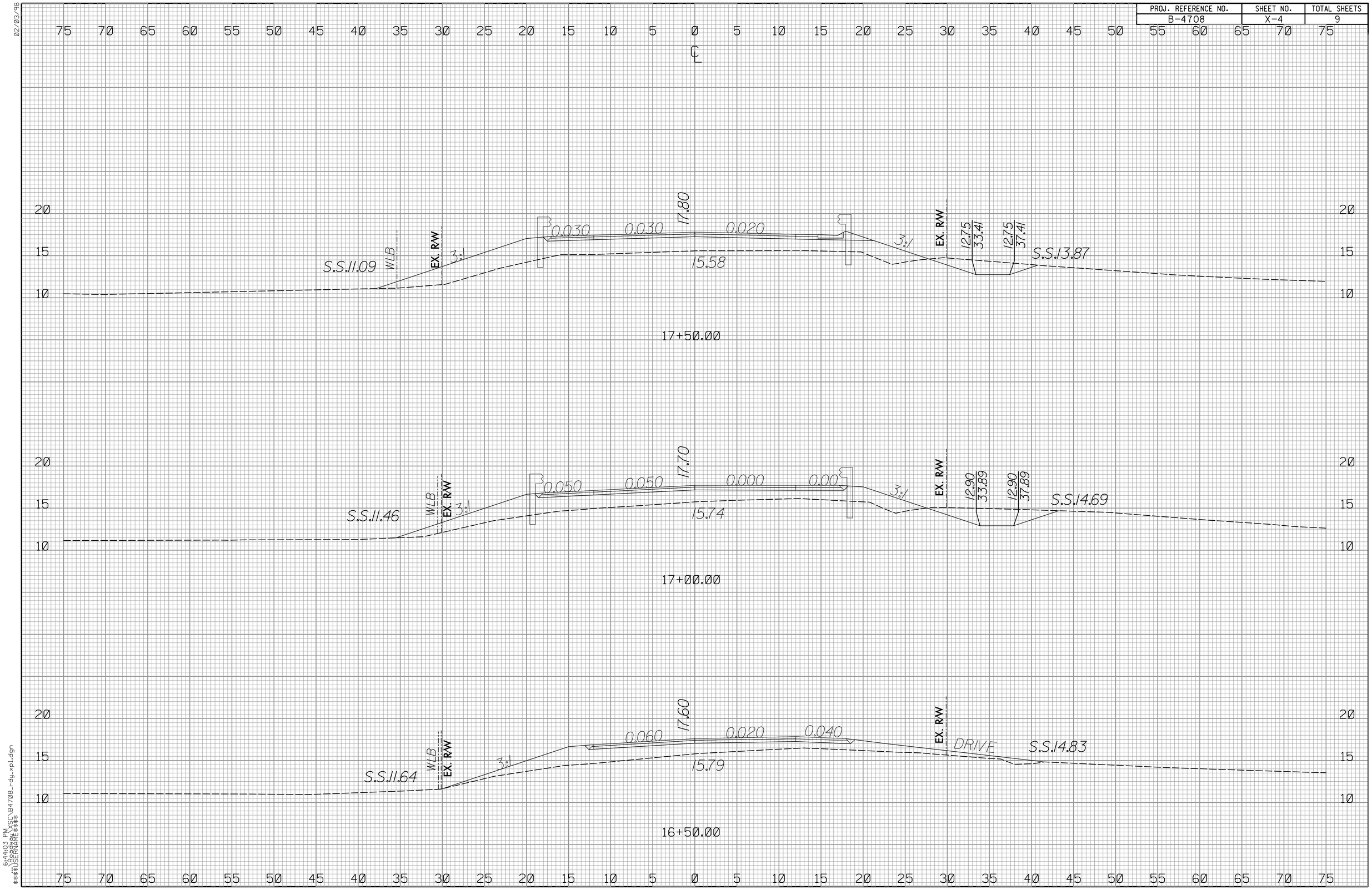

02/03/98

$$$$USERNAME$$$$ 6:44:03 PM
$$$$DATE$$$$ 2/2/99 $$$$WORKSPACE$$$$ WSC\B4708-rdy-xpl.dgn

PROJ. REFERENCE NO.	SHEET NO.	TOTAL SHEETS
B-4708	X-5	9

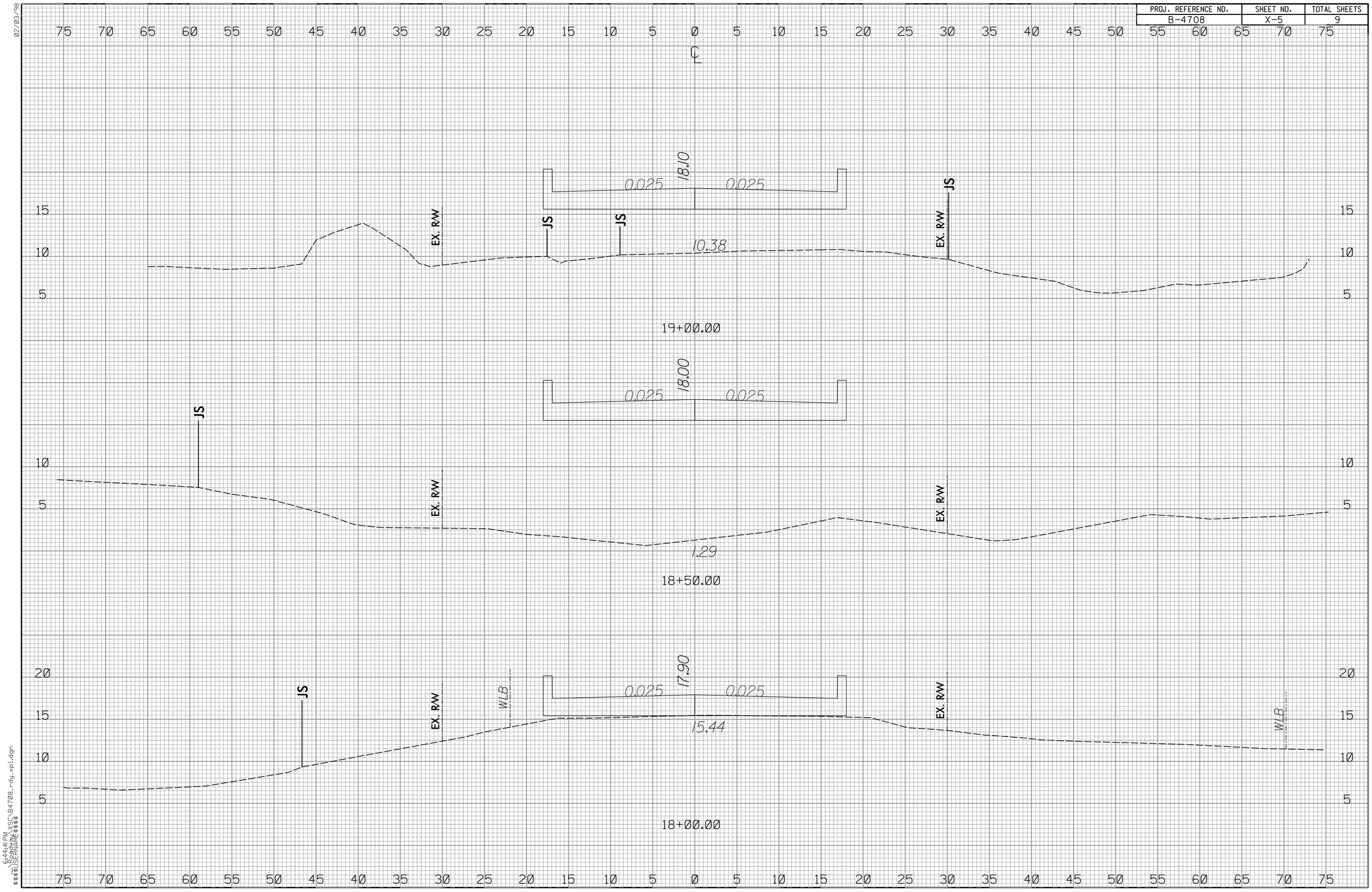

02/03/98

6:44:41 PM
$$$$USERNAME$$$$ ...\B4708_rdy_xpl.dgn

PROJ. REFERENCE NO.	SHEET NO.	TOTAL SHEETS
B-4708	X-6	9

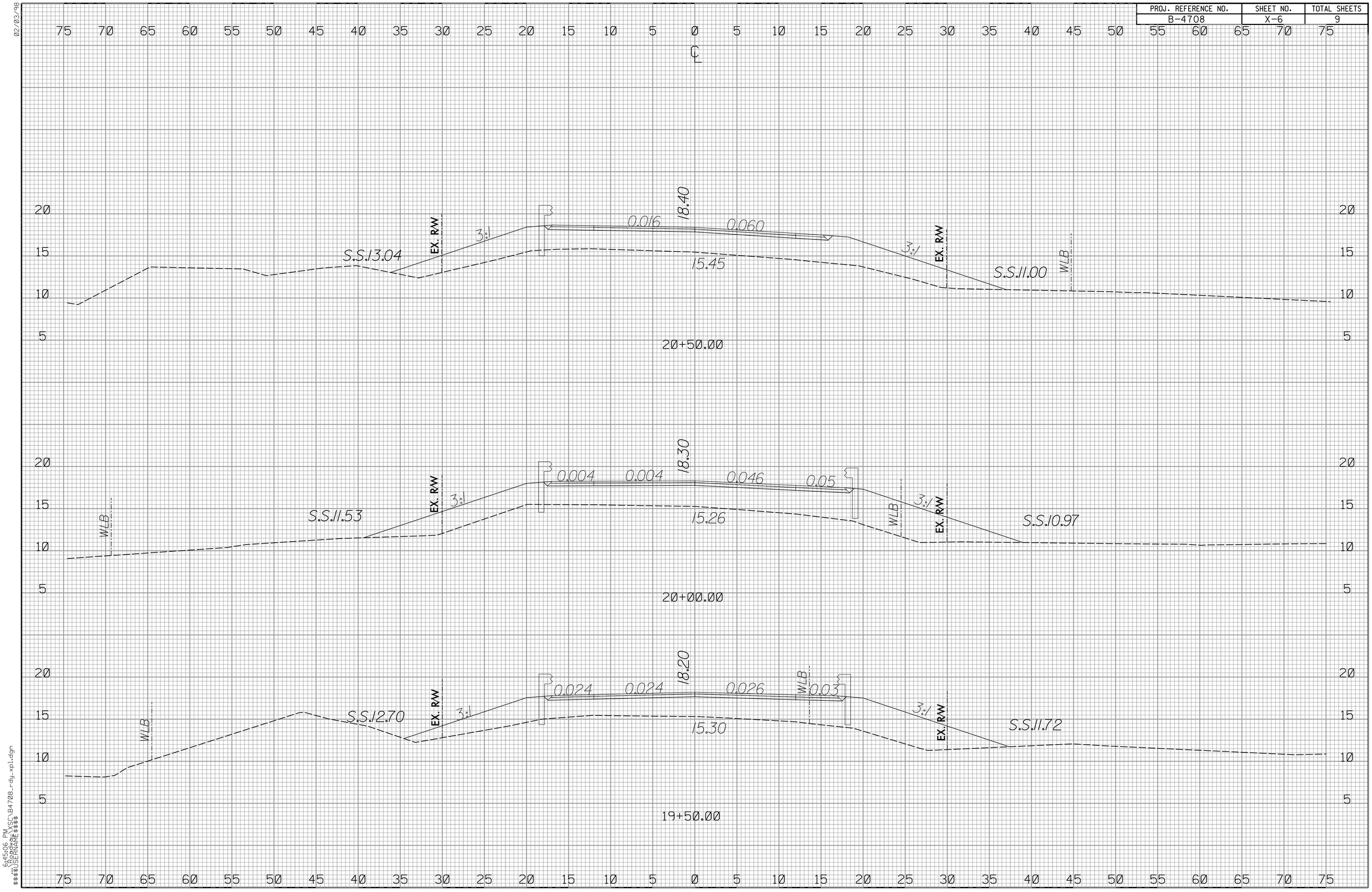

02/03/98

64506 PM
$$$$USERNAME$$$$ $$$$pw:\\SC\B4708-rdg-xpl.dgn

PROJ. REFERENCE NO.	SHEET NO.	TOTAL SHEETS
B-4708	X-7	9

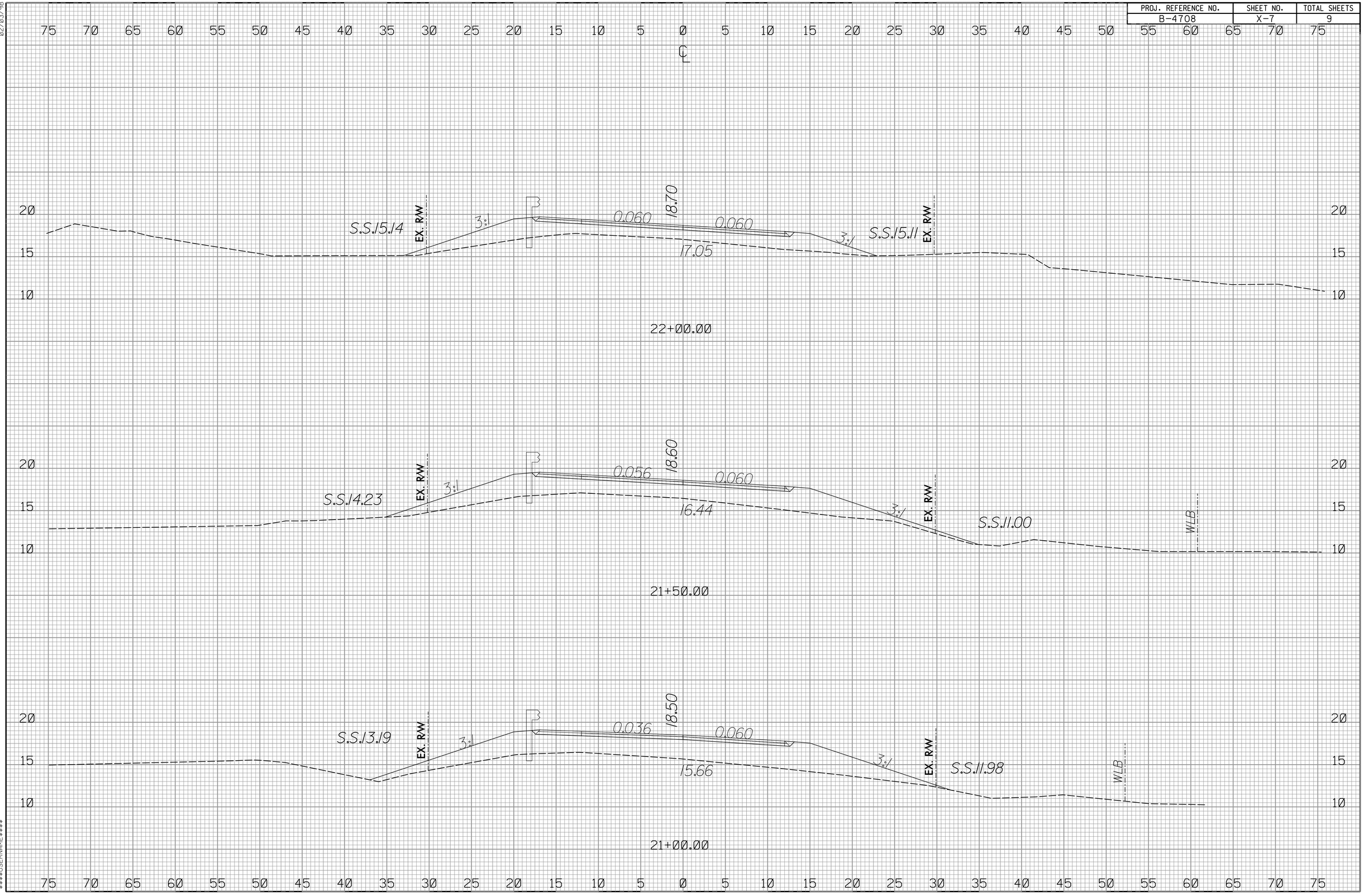

02/03/98

6:45:45 PM
$$$$USERNAME$$$$ ...Roads...\WSC\B4708-rdg-xpl.dgn

PROJ. REFERENCE NO.	SHEET NO.	TOTAL SHEETS
B-4708	X-8	9

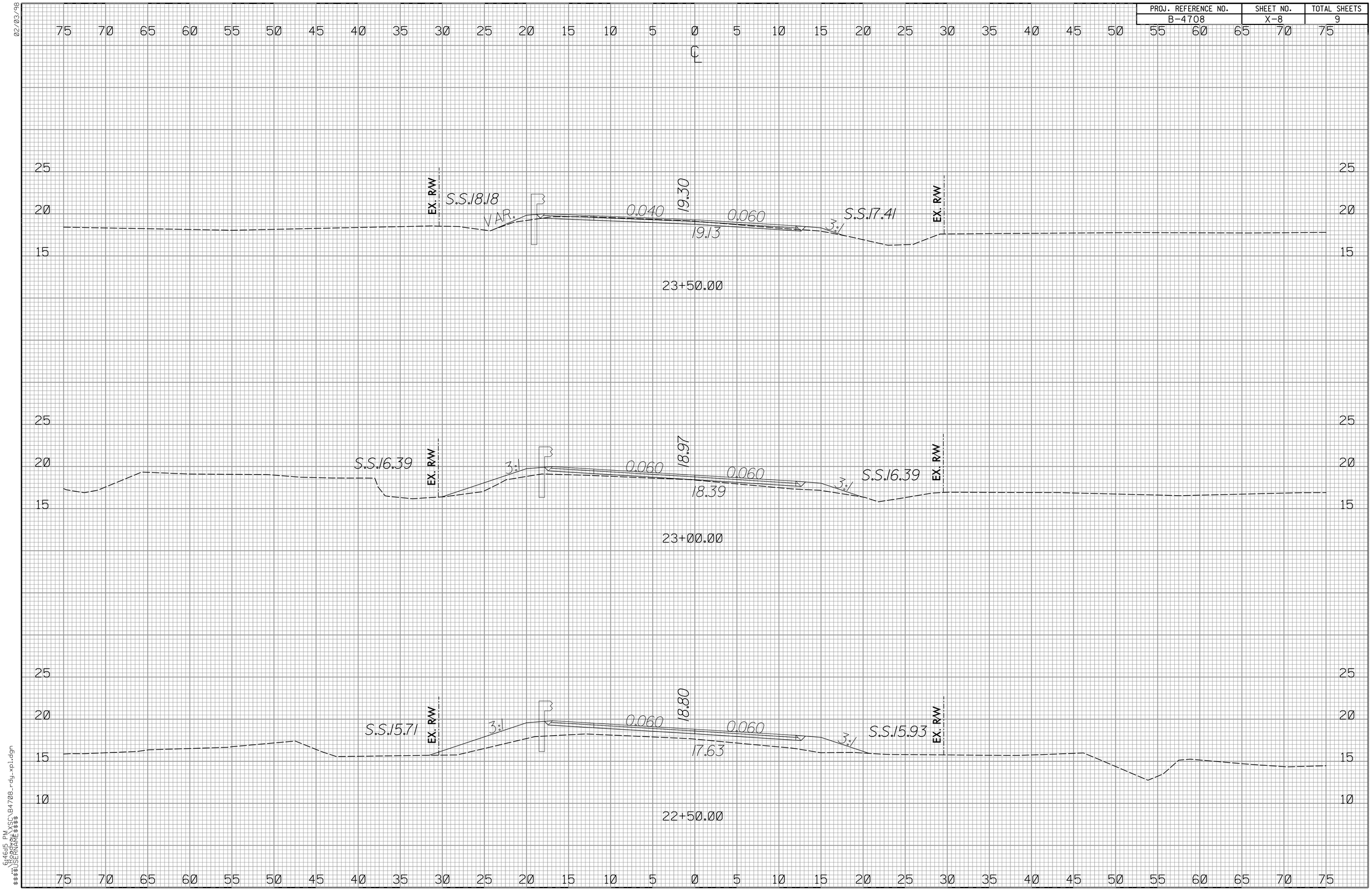

02/03/98

6:46:15 PM
$$$$USERNAME$$$$
$$$$:\XSC\B4708-rdy-xpl.dgn

PROJ. REFERENCE NO.	SHEET NO.	TOTAL SHEETS
B-4708	X-9	9

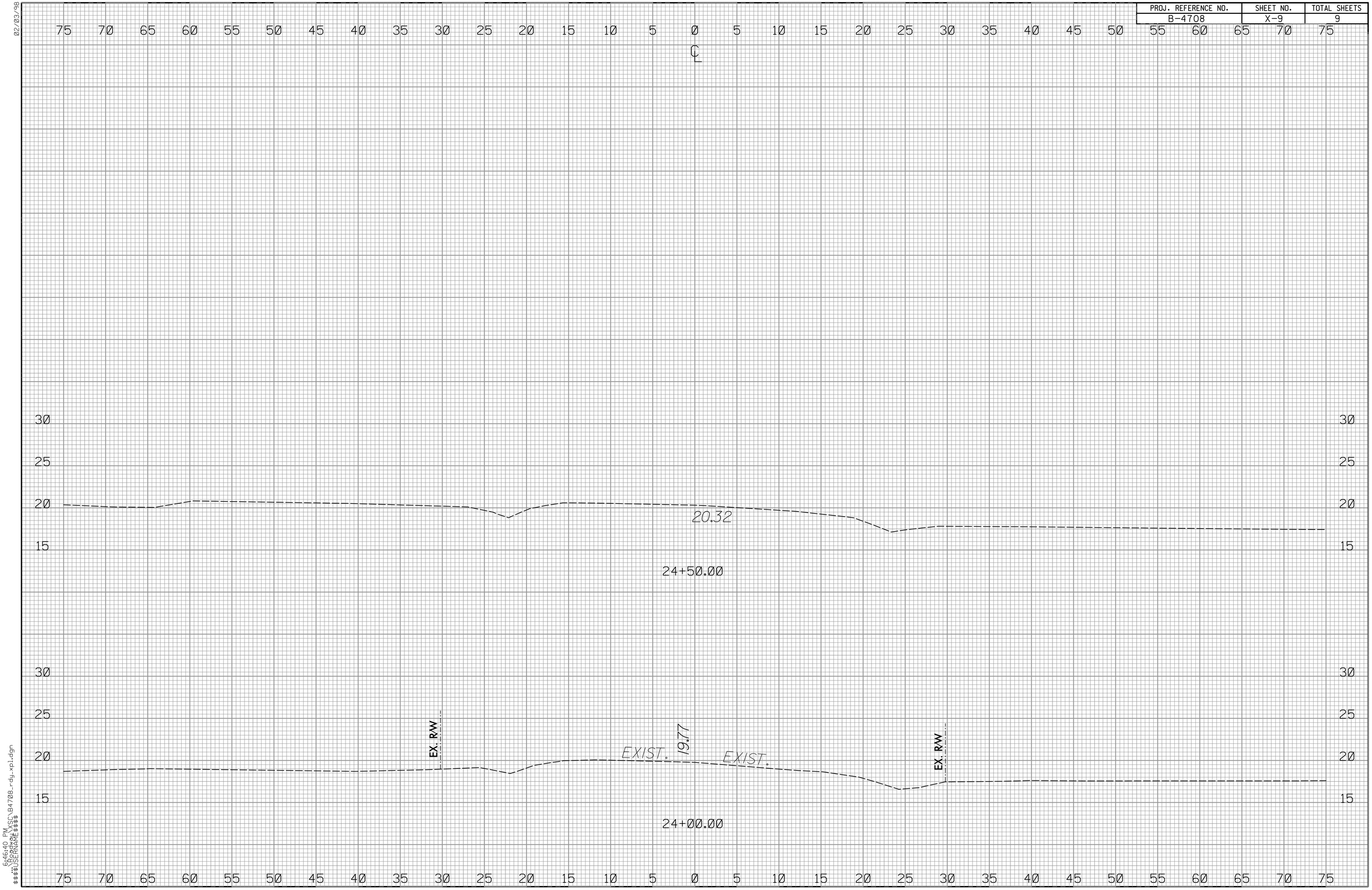

02/03/98

6:46:40 PM
$$$$USERNAME$$$$
$$$$:\Projects\XSC\B4708_rdy_xpl.dgn

F.A. PROJECT NO. BRSTP-1001(47)

FOR GENERAL NOTES, SEE SHEET 2.

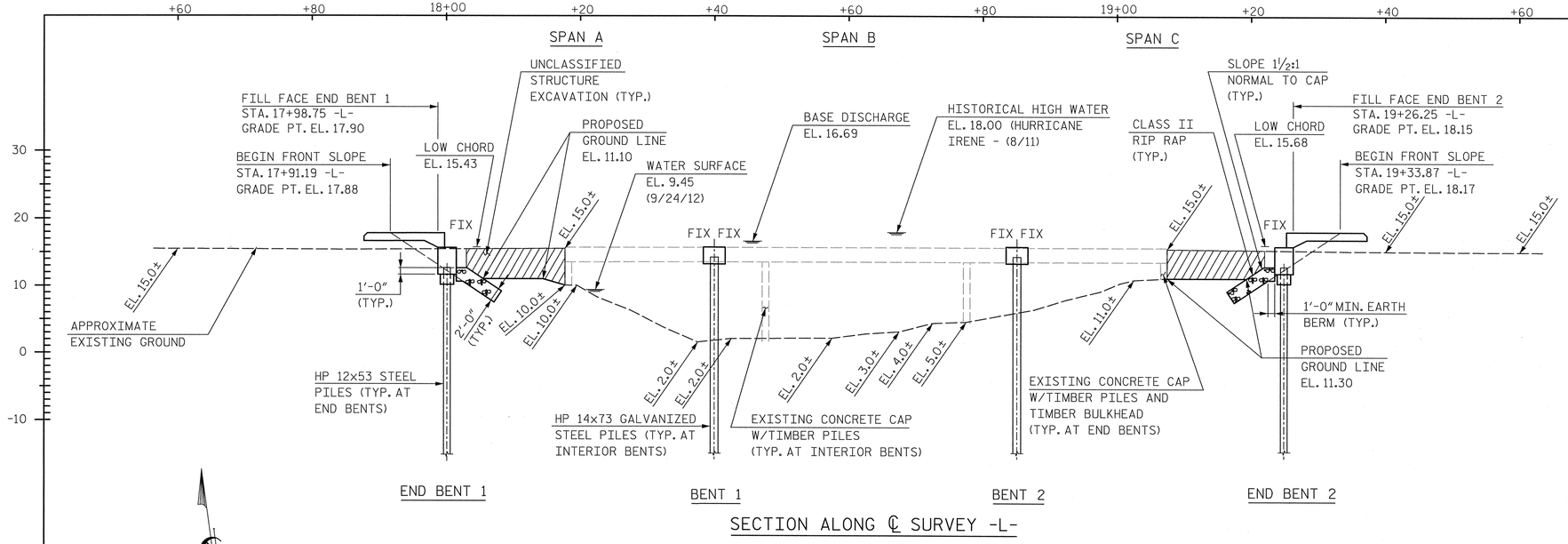

SECTION ALONG ℄ SURVEY -L-

BRIDGE HYDRAULIC DATA

DESIGN DISCHARGE	=	3378 CFS
FREQUENCY OF DESIGN FLOOD	=	50 YR
DESIGN HIGH WATER ELEVATION	=	15.8 FT.
DRAINAGE AREA	=	44.5 SQ. MI.
BASIC DISCHARGE (Q100)	=	4280 CFS
BASIC HIGH WATER ELEVATION	=	16.69 FT.

OVERTOPPING FLOOD DATA

OVERTOPPING DISCHARGE	=	5500 CFS
FREQUENCY OF OVERTOPPING FLOOD	=	200 YR
OVERTOPPING FLOOD ELEVATION	=	17.7 FT.

NOTE: OVERTOPPING OCCURS AT ROADWAY STA. 17+00±.

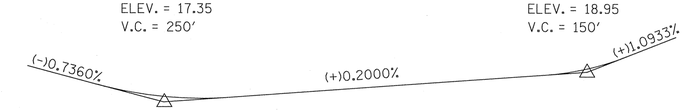

GRADE DATA -L-

CURVE DATA -L-

PI STA. = 16+90.97	PI STA. = 20+42.88
△ = 13°18'39.9" (LT)	△ = 11°28'42.0" (RT)
D = 6°39'44.3"	D = 7°09'43.1"
L = 199.80'	L = 160.27'
T = 100.35'	T = 80.40'
R = 860.00'	R = 800.00'

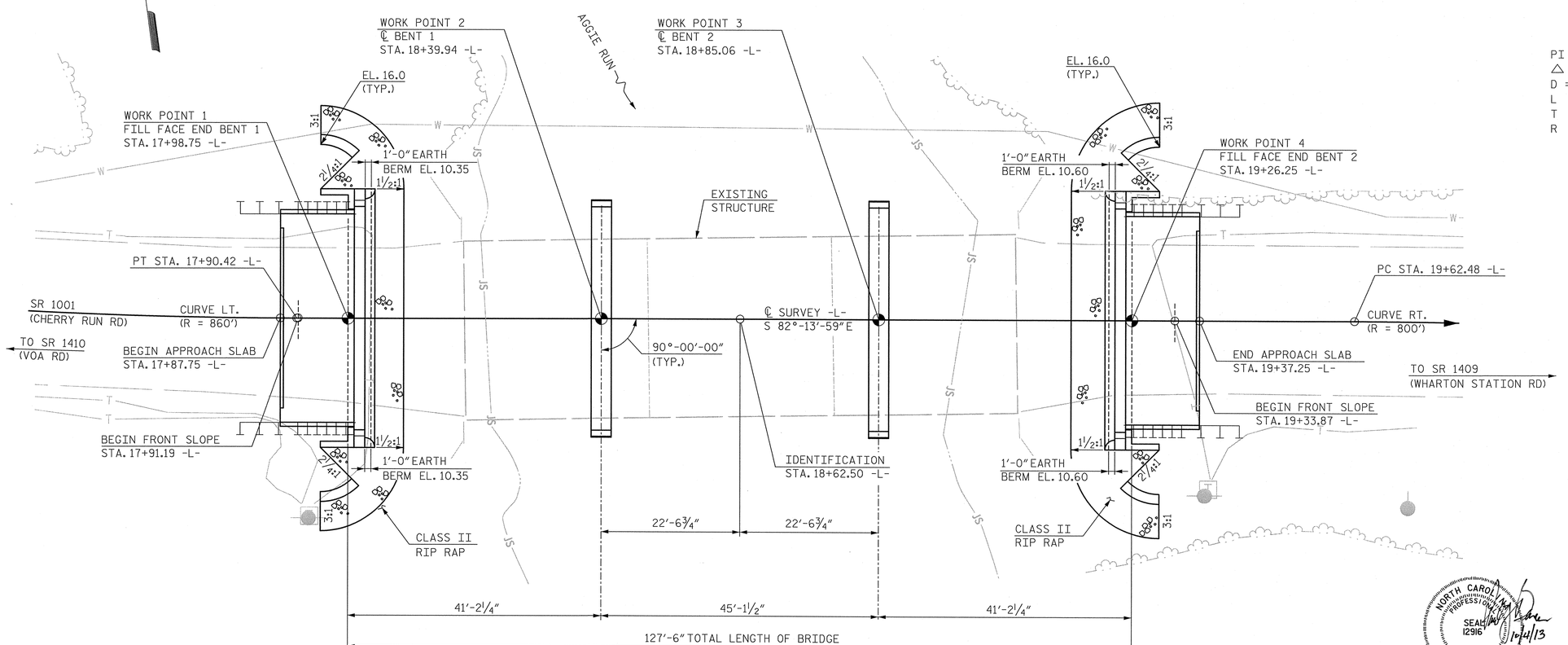

PLAN

NOTE: PILES NOT SHOWN FOR CLARITY.

I HEREBY CERTIFY THESE PLANS ARE AS-BUILT PLANS

PROJECT NO. 38483.1.2

BEAUFORT COUNTY

STATION: 18+62.50 -L-

SHEET 1 OF 2 REPLACES BRIDGE NO. 0005

STATE OF NORTH CAROLINA
DEPARTMENT OF TRANSPORTATION
RALEIGH

GENERAL DRAWING FOR BRIDGE ON SR 1001 OVER AGGIE RUN BETWEEN SR 1410 AND SR 1409

NORTH CAROLINA PROFESSIONAL SEAL 12916 ENGINEER PAUL J. BARBER 10/4/13

HNTB NORTH CAROLINA, P.C.
NC License No. C-1554
343 E. Six Forks Rd., Suite 200, Raleigh, N.C. 27609

DRAWN BY J. BAYNE DATE 5/13
CHECKED BY D. RAGAN DATE 5/13
DWG. NO. 1

REVISIONS						SHEET NO.
NO.	BY	DATE	NO.	BY	DATE	S-1
1			3			TOTAL SHEETS
2			4			17

BM - "BM1", 64.45' RT OF STA. 17+36.32 -L-. RAILROAD SPIKE SET IN BASE OF H-POLE ON WEST SIDE OF SWAMP. EL. 13.65

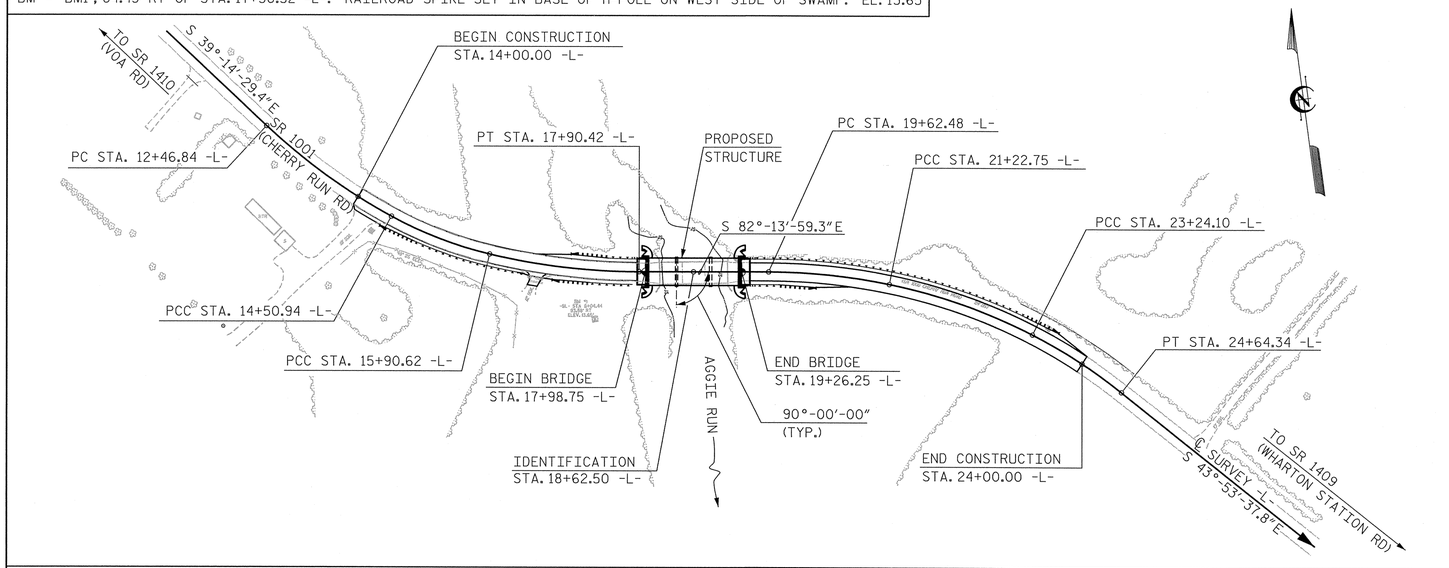

LOCATION SKETCH

FOR UTILITY INFORMATION, SEE UTILITY PLANS AND SPECIAL PROVISIONS.

FOUNDATION NOTES:

FOR PILES, SEE SECTION 450 OF THE STANDARD SPECIFICATIONS.

PILES AT END BENT NO. 1 AND END BENT NO. 2 ARE DESIGNED FOR A FACTORED RESISTANCE OF 65 TONS PER PILE.

DRIVE PILES AT END BENT NO. 1 AND END BENT NO. 2 TO A REQUIRED DRIVING RESISTANCE OF 110 TONS PER PILE.

PILES AT BENT NO. 1 AND BENT NO. 2 ARE DESIGNED FOR A FACTORED RESISTANCE OF 100 TONS PER PILE.

DRIVE PILES AT BENT NO. 1 AND BENT NO. 2 TO A REQUIRED DRIVING RESISTANCE OF 180 TONS PER PILE. THIS REQUIRED DRIVING RESISTANCE INCLUDES ADDITIONAL RESISTANCE FOR DOWNDRAG OR SCOUR.

INSTALL PILES AT BENT NO. 1 AND BENT NO. 2 TO A TIP ELEVATION NO HIGHER THAN -31.5 FT.

STEEL H-PILE POINTS ARE REQUIRED FOR STEEL H-PILES AT BENT NO. 1 AND BENT NO. 2. FOR STEEL PILE POINTS, SEE SECTION 450 OF THE STANDARD SPECIFICATIONS.

THE SCOUR CRITICAL ELEVATION FOR BENT NO. 1 AND BENT NO 2 IS ELEVATION -7.5 FT. SCOUR CRITICAL ELEVATIONS ARE USED TO MONITOR POSSIBLE SCOUR PROBLEMS DURING THE LIFE OF THE STRUCTURE.

IT HAS BEEN ESTIMATED THAT A HAMMER WITH AN EQUIVALENT RATED ENERGY IN THE RANGE OF 30 TO 45 FT-KIPS PER BLOW WILL BE REQUIRED TO DRIVE PILES AT END BENT NO. 1 AND END BENT NO. 2. THIS ESTIMATED ENERGY RANGE DOES NOT RELEASE THE CONTRACTOR FROM PROVIDING DRIVING EQUIPMENT IN ACCORDANCE WITH SUBARTICLE 450-3(D)(2) OF THE STANDARD SPECIFICATIONS.

IT HAS BEEN ESTIMATED THAT A HAMMER WITH AN EQUIVALENT RATED ENERGY IN THE RANGE OF 40 TO 60 FT-KIPS PER BLOW WILL BE REQUIRED TO DRIVE PILES AT BENT NO. 1 AND BENT NO. 2. THIS ESTIMATED ENERGY RANGE DOES NOT RELEASE THE CONTRACTOR FROM PROVIDING DRIVING EQUIPMENT IN ACCORDANCE WITH SUBARTICLE 450-3(D)(2) OF THE STANDARD SPECIFICATIONS.

TESTING PILES WITH THE PDA DURING DRIVING, RESTRIKING OR REDRIVING MAY BE REQUIRED. THE ENGINEER WILL DETERMINE THE NEED FOR PDA TESTING. FOR PDA TESTING, SEE SECTION 450 OF THE STANDARD SPECIFICATIONS AND FOR PILE DRIVING CRITERIA, SEE PILE DRIVING CRITERIA PROVISION.

TOTAL BILL OF MATERIAL

	REMOVAL OF EXISTING STRUCTURE AT STATION 18+62.50 -L-	PDA TESTING	UNCLASSIFIED STRUCTURE EXCAVATION AT STATION 18+62.50 -L-	CLASS A CONCRETE	BRIDGE APPROACH SLABS AT STATION 18+62.50 -L-	REINFORCING STEEL	HP 12x53 STEEL PILES		HP 14x73 GALVANIZED STEEL PILES		STEEL PILE POINTS	PILE REDRIVES	VERTICAL CONCRETE BARRIER RAIL	RIP RAP CLASS II (2'-0" THICK)	GEOTEXTILE FOR DRAINAGE	ELASTOMERIC BEARINGS	3'-0"x1'-9" PRESTRESSED CONCRETE CORED SLABS	
	LUMP SUM	EACH	LUMP SUM	CU. YDS.	LUMP SUM	LBS.	NO.	LIN. FT.	NO.	LIN. FT.	EACH	EACH	LIN. FT.	TONS	SQ. YDS.	LUMP SUM	NO.	LIN. FT.
SUPERSTRUCTURE	LUMP SUM	—	—	—	LUMP SUM	—	—	—	—	—	—	—	250.75	—	—	LUMP SUM	36	1,500
END BENT NO. 1	—	—	LUMP SUM	22.8	—	2,806	7	420	—	—	—	4	—	52	58	—	—	—
BENT NO. 1	—	—	—	11.7	—	2,339	—	—	8	560	8	4	—	—	—	—	—	—
BENT NO. 2	—	—	—	11.7	—	2,339	—	—	8	560	8	4	—	—	—	—	—	—
END BENT NO. 2	—	—	LUMP SUM	22.8	—	2,806	7	420	—	—	—	4	—	52	58	—	—	—
TOTAL	LUMP SUM	2	LUMP SUM	69.0	LUMP SUM	10,290	14	840	16	1,120	16	16	250.75	104	116	LUMP SUM	36	1,500

GENERAL NOTES

ASSUMED LIVE LOAD = HL-93 OR ALTERNATE LOADING.

THIS BRIDGE HAS BEEN DESIGNED IN ACCORDANCE WITH THE AASHTO LRFD BRIDGE DESIGN SPECIFICATIONS.

THIS BRIDGE IS LOCATED IN SEISMIC ZONE 1.

THIS BRIDGE SHALL BE CONSTRUCTED USING TOP-DOWN CONSTRUCTION METHODS. THE USE OF A TEMPORARY CAUSEWAY OR WORK BRIDGE IS NOT PERMITTED.

FOR OTHER DESIGN DATA AND GENERAL NOTES, SEE SHEET SN.

FOR SUBMITTAL OF WORKING DRAWINGS, SEE SPECIAL PROVISIONS.

FOR FALSEWORK AND FORMWORK, SEE SPECIAL PROVISIONS.

FOR CRANE SAFETY, SEE SPECIAL PROVISIONS.

FOR GROUT FOR STRUCTURES, SEE SPECIAL PROVISIONS.

THE CONTRACTOR SHALL PROVIDE INDEPENDANT ASSURANCE SAMPLES OF REINFORCING STEEL AS FOLLOWS: FOR PROJECTS REQUIRING UP TO 400 TONS OF REINFORCING STEEL, ONE 30 INCH SAMPLE OF EACH SIZE BAR USED, AND FOR PROJECTS REQUIRING OVER 400 TONS OF REINFORCING STEEL, TWO 30 INCH SAMPLES OF EACH SIZE BAR USED. THE BARS FROM WHICH THE SAMPLES ARE TAKEN MUST THEN BE SPLICED WITH REPLACEMENT BARS OF THE SIZE AND LENGTH OF THE SAMPLE, PLUS A MINIMUM LAP SPLICE OF THIRTY BAR DIAMETERS. PAYMENT FOR THE SAMPLES OF REINFORCING STEEL SHALL BE CONSIDERED INCIDENTAL TO VARIOUS PAY ITEMS.

THE MATERIAL SHOWN IN THE CROSS-HATCHED AREA SHALL BE EXCAVATED FOR A DISTANCE OF 21'-0" FT. EACH SIDE OF CENTERLINE ROADWAY AS DIRECTED BY THE ENGINEER. THIS WORK WILL BE PAID FOR AT THE CONTRACT LUMP SUM PRICE FOR UNCLASSIFIED STRUCTURE EXCAVATION. SEE SECTION 412 OF THE STANDARD SPECIFICATIONS.

THE EXISTING 3 SPAN STRUCTURE WITH SPAN LENGTHS OF 30'-6", 30'-1", AND 30'-6" WITH PRESTRESSED CONCRETE CHANNEL SECTIONS AND A BITUMINOUS WEARING SURFACE WITH A 31' OUT TO OUT DECK WIDTH ON CONCRETE CAPS AND TIMBER PILES SHALL BE REMOVED. IN ADDITION, ANY PILES REMAINING FROM PREVIOUS BRIDGE CONSTRUCTION OR MAINTENANCE OPERATIONS SHALL BE REMOVED AND INCLUDED IN THE LUMP SUM PAY ITEM FOR "REMOVAL OF EXISTING STRUCTURE AT STATION 18+62.50 -L-".

THE SUBSTRUCTURE OF THE EXISTING BRIDGE INDICATED ON THE PLANS IS FROM THE BEST INFORMATION AVAILABLE. SINCE THIS INFORMATION IS SHOWN FOR THE CONVENIENCE OF THE CONTRACTOR, THE CONTRACTOR SHALL HAVE NO CLAIM WHATSOEVER AGAINST THE DEPARTMENT OF TRANSPORTATION FOR ANY DELAYS OR ADDITIONAL COST INCURRED BASED ON DIFFERENCES BETWEEN THE EXISTING BRIDGE SUBSTRUCTURE SHOWN ON THE PLANS AND THE ACTUAL CONDITIONS AT THE PROJECT SITE.

REMOVAL OF THE EXISTING BRIDGE SHALL BE PERFORMED SO AS NOT TO ALLOW DEBRIS TO FALL INTO THE WATER. THE CONTRACTOR SHALL REMOVE THE BRIDGE AND SUBMIT PLANS FOR DEMOLITION IN ACCORDANCE WITH ARTICLE 402-2 OF THE STANDARD SPECIFICATIONS.

THIS STRUCTURE HAS BEEN DESIGNED IN ACCORDANCE WITH "HEC 18-EVALUATING SCOUR AT BRIDGES".

FOR INTERIOR BENTS 1 AND 2, ONLY PARTIAL GALVANIZING OF THE PILES IS REQUIRED. SEE INTERIOR BENT SHEETS FOR REQUIRED GALVANIZED LENGTHS. PAYMENT FOR PARTIALLY GALVANIZED PILES WILL BE MADE UNDER THE CONTRACT UNIT PRICE FOR GALVANIZED STEEL PILES.

FOR EROSION CONTROL MEASURES SEE EROSION CONTROL PLANS.

ASPHALT WEARING SURFACE IS INCLUDED IN ROADWAY QUANTITY ON ROADWAY PLANS.

NORTH CAROLINA PROFESSIONAL SEAL 12916 ENGINEER PAUL J. BARBER 10/21/13

PROJECT NO. 38483.1.2

BEAUFORT COUNTY

STATION: 18+62.50 -L-

SHEET 2 OF 2

STATE OF NORTH CAROLINA
DEPARTMENT OF TRANSPORTATION
RALEIGH

GENERAL DRAWING
FOR BRIDGE ON SR 1001
OVER AGGIE RUN
BETWEEN SR 1410
AND SR 1409

HNTB NORTH CAROLINA, P.C.
NC License No. C-1554
343 E. Six Forks Rd., Suite 200, Raleigh, N.C. 27609

DRAWN BY J. BAYNE DATE 5/13
CHECKED BY D. RAGAN DATE 5/13
DWG. NO. 2

REVISIONS						SHEET NO.
NO.	BY	DATE	NO.	BY	DATE	S-2
1			3			TOTAL SHEETS
2			4			17

LOAD AND RESISTANCE FACTOR RATING (LRFD) SUMMARY FOR PRESTRESSED CONCRETE GIRDERS

LEVEL		VEHICLE	WEIGHT (W) (TONS)	CONTROLLING LOAD RATING	MINIMUM RATING FACTORS (RF)	TONS = W X RF	STRENGTH I LIMIT STATE											SERVICE III LIMIT STATE						COMMENT NUMBER
							LIVELOAD FACTORS	MOMENT					SHEAR					LIVELOAD FACTORS	MOMENT					
								DISTRIBUTION FACTORS (DF)	RATING FACTOR	SPAN	GIRDER LOCATION	DISTANCE FROM LEFT END OF SPAN (ft)	DISTRIBUTION FACTORS (DF)	RATING FACTOR	SPAN	GIRDER LOCATION	DISTANCE FROM LEFT END OF SPAN (ft)		DISTRIBUTION FACTORS (DF)	RATING FACTOR	SPAN	GIRDER LOCATION	DISTANCE FROM LEFT END OF SPAN (ft)	
DESIGN LOAD RATING		HL-93(Inv)	N/A	1	1.319	--	1.75	0.278	1.76	40'	EL	19.5	0.549	**1.32**	40'	EL	**1.95**	0.80	0.278	1.55	40'	EL	19.5	
		HL-93(Opr)	N/A	--	1.709	--	1.35	0.278	2.28	40'	EL	19.5	0.549	1.71	40'	EL	1.95	N/A	--	--	--	--	--	
		HS-20(Inv)	36.000	2	1.540	55.449	1.75	0.278	2.21	40'	EL	19.5	0.549	**1.54**	40'	EL	**1.95**	0.80	0.278	1.94	40'	EL	19.5	
		HS-20(Opr)	36.000	--	1.997	71.878	1.35	0.278	2.86	40'	EL	19.5	0.549	2	40'	EL	1.95	N/A	--	--	--	--	--	
LEGAL LOAD RATING	SV	SNSH	13.500	--	3.606	48.687	1.4	0.278	5.1	40'	EL	19.5	0.549	4.13	40'	EL	1.95	0.80	0.278	3.61	40'	EL	19.5	
		SNGARBS2	20.000	--	2.964	59.289	1.4	0.278	4.19	40'	EL	15.6	0.549	3.07	40'	EL	1.95	0.80	0.278	2.96	40'	EL	19.5	
		SNAGRIS2	22.000	--	2.906	63.929	1.4	0.278	4.09	40'	EL	15.6	0.549	2.91	40'	EL	1.95	0.80	0.278	2.92	40'	EL	15.6	
		SNCOTTS3	27.250	--	1.803	49.125	1.4	0.278	2.55	40'	EL	19.5	0.549	2.07	40'	EL	1.95	0.80	0.278	1.80	40'	EL	19.5	
		SNAGGRS4	34.925	--	1.623	56.667	1.4	0.278	2.29	40'	EL	19.5	0.549	1.82	40'	EL	1.95	0.80	0.278	1.62	40'	EL	19.5	
		SNS5A	35.550	--	1.578	56.107	1.4	0.278	2.23	40'	EL	19.5	0.549	1.9	40'	EL	1.95	0.80	0.278	1.58	40'	EL	19.5	
		SNS6A	39.950	--	1.502	59.992	1.4	0.278	2.12	40'	EL	19.5	0.549	1.77	40'	EL	1.95	0.80	0.278	1.50	40'	EL	19.5	
		SNS7B	42.000	3	1.432	60.149	1.4	0.278	2.02	40'	EL	19.5	0.549	1.81	40'	EL	1.95	0.80	0.278	**1.43**	40'	EL	**19.5**	
	TTST	TNAGRIT3	33.000	--	1.848	60.976	1.4	0.278	2.61	40'	EL	19.5	0.549	2.08	40'	EL	1.95	0.80	0.278	1.85	40'	EL	19.5	
		TNT4A	33.075	--	1.872	61.901	1.4	0.278	2.65	40'	EL	19.5	0.549	1.98	40'	EL	1.95	0.80	0.278	1.87	40'	EL	19.5	
		TNT6A	41.600	--	1.587	66.032	1.4	0.278	2.24	40'	EL	19.5	0.549	1.94	40'	EL	1.95	0.80	0.278	1.59	40'	EL	19.5	
		TNT7A	42.000	--	1.627	68.354	1.4	0.278	2.3	40'	EL	19.5	0.549	1.79	40'	EL	1.95	0.80	0.278	1.63	40'	EL	19.5	
		TNT7B	42.000	--	1.664	69.888	1.4	0.278	2.35	40'	EL	19.5	0.549	1.72	40'	EL	1.95	0.80	0.278	1.66	40'	EL	19.5	
		TNAGRIT4	43.000	--	1.619	69.61	1.4	0.278	2.28	40'	EL	15.6	0.549	1.65	40'	EL	1.95	0.80	0.278	1.62	40'	EL	19.5	
		TNAGT5A	45.000	--	1.498	67.412	1.4	0.278	2.12	40'	EL	19.5	0.549	1.71	40'	EL	1.95	0.80	0.278	1.50	40'	EL	19.5	
		TNAGT5B	45.000	--	1.455	65.486	1.4	0.278	2.06	40'	EL	19.5	0.549	1.56	40'	EL	1.95	0.80	0.278	1.46	40'	EL	19.5	

LOAD FACTORS:

DESIGN LOAD RATING FACTORS	LIMIT STATE	γ_{DC}	γ_{DW}
	STRENGTH I	1.25	1.50
	SERVICE III	1.00	1.00

NOTES:

MINIMUM RATING FACTORS ARE BASED ON THE STRENGTH I AND SERVICE III LIMIT STATES.

ALLOWABLE STRESSES FOR SERVICE III LIMIT STATE ARE AS REQUIRED FOR DESIGN.

COMMENTS:

1.
2.
3.
4.

(#) CONTROLLING LOAD RATING

(1) DESIGN LOAD RATING (HL-93)
(2) DESIGN LOAD RATING (HS-20)
(3) LEGAL LOAD RATING **
** SEE CHART FOR VEHICLE TYPE

GIRDER LOCATION

I - INTERIOR GIRDER
EL - EXTERIOR LEFT GIRDER
ER - EXTERIOR RIGHT GIRDER

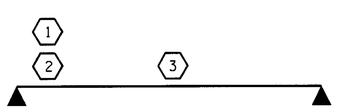

LRFR SUMMARY
FOR SPANS 'A' & 'C'

PROJECT NO. B-4708
BEAUFORT COUNTY
STATION: 18+62.50 -L-

STATE OF NORTH CAROLINA
DEPARTMENT OF TRANSPORTATION
RALEIGH

STANDARD
LRFR SUMMARY FOR 40' CORED SLAB UNIT 90° SKEW
(NON-INTERSTATE TRAFFIC)

NORTH CAROLINA PROFESSIONAL SEAL 22005 ENGINEER A. KEITH PASCHAL
9.26.13

REVISIONS						SHEET NO.
NO.	BY:	DATE:	NO.	BY:	DATE:	S-3
1			3			TOTAL SHEETS
2			4			17

ASSEMBLED BY : M. D. PISO DATE : 05-13-13
CHECKED BY : PEGGY ADKINS DATE : 07-10-13
DRAWN BY : CVC 6/10
CHECKED BY : DNS 6/10

26-SEP-2013 07:37
S:\DPGI\Keith\B-4708\mdpiso\microstation\B-4708_SD_CS.dgn
kpaschal

STD. NO. 21LRFR1_90S_40L

LOAD AND RESISTANCE FACTOR RATING (LRFD) SUMMARY FOR PRESTRESSED CONCRETE GIRDERS

LEVEL		VEHICLE	WEIGHT (W) (TONS)	CONTROLLING LOAD RATING	MINIMUM RATING FACTORS (RF)	TONS = W X RF	STRENGTH I LIMIT STATE											SERVICE III LIMIT STATE						COMMENT NUMBER
								MOMENT					SHEAR						MOMENT					
							LIVELOAD FACTORS	DISTRIBUTION FACTORS (DF)	RATING FACTOR	SPAN	GIRDER LOCATION	DISTANCE FROM LEFT END OF SPAN (ft)	DISTRIBUTION FACTORS (DF)	RATING FACTOR	SPAN	GIRDER LOCATION	DISTANCE FROM LEFT END OF SPAN (ft)	LIVELOAD FACTORS	DISTRIBUTION FACTORS (DF)	RATING FACTOR	SPAN	GIRDER LOCATION	DISTANCE FROM LEFT END OF SPAN (ft)	
DESIGN LOAD RATING		HL-93(Inv)	N/A	1	1.088	--	1.75	0.277	1.34	45'	EL	22	0.539	1.23	45'	EL	2.2	0.80	0.277	**1.09**	45'	EL	**22**	
		HL-93(Opr)	N/A	--	1.590	--	1.35	0.277	1.74	45'	EL	22	0.539	1.59	45'	EL	2.2	N/A	--	--	--	--	--	
		HS-20(Inv)	36.000	2	1.336	48.104	1.75	0.277	1.65	45'	EL	22	0.539	1.45	45'	EL	2.2	0.80	0.277	**1.34**	45'	EL	**22**	
		HS-20(Opr)	36.000	--	1.882	67.763	1.35	0.277	2.14	45'	EL	22	0.539	1.88	45'	EL	2.2	N/A	--	--	--	--	--	
LEGAL LOAD RATING	SV	SNSH	13.500	--	2.611	35.252	1.4	0.277	4.02	45'	EL	22	0.539	4.01	45'	EL	2.2	0.80	0.277	2.61	45'	EL	22	
		SNGARBS2	20.000	--	2.108	42.166	1.4	0.277	3.25	45'	EL	22	0.539	2.94	45'	EL	2.2	0.80	0.277	2.11	45'	EL	22	
		SNAGRIS2	22.000	--	2.067	45.466	1.4	0.277	3.15	45'	EL	17.6	0.539	2.77	45'	EL	2.2	0.80	0.277	2.07	45'	EL	22	
		SNCOTTS3	27.250	--	1.304	35.527	1.4	0.277	2.01	45'	EL	22	0.539	2.01	45'	EL	2.2	0.80	0.277	1.30	45'	EL	22	
		SNAGGRS4	34.925	--	1.150	40.181	1.4	0.277	1.77	45'	EL	22	0.539	1.74	45'	EL	2.2	0.80	0.277	1.15	45'	EL	22	
		SNS5A	35.550	--	1.121	39.841	1.4	0.277	1.73	45'	EL	22	0.539	1.79	45'	EL	2.2	0.80	0.277	1.12	45'	EL	22	
		SNS6A	39.950	--	1.056	42.175	1.4	0.277	1.63	45'	EL	22	0.539	1.67	45'	EL	2.2	0.80	0.277	1.06	45'	EL	22	
		SNS7B	42.000	3	1.006	42.268	1.4	0.277	1.55	45'	EL	22	0.539	1.68	45'	EL	2.2	0.80	0.277	**1.01**	45'	EL	**22**	
	TTST	TNAGRIT3	33.000	--	1.296	42.759	1.4	0.277	2	45'	EL	22	0.539	1.96	45'	EL	2.2	0.80	0.277	1.30	45'	EL	22	
		TNT4A	33.075	--	1.309	43.305	1.4	0.277	2.02	45'	EL	22	0.539	1.88	45'	EL	2.2	0.80	0.277	1.31	45'	EL	22	
		TNT6A	41.600	--	1.099	45.712	1.4	0.277	1.69	45'	EL	22	0.539	1.83	45'	EL	2.2	0.80	0.277	1.10	45'	EL	22	
		TNT7A	42.000	--	1.120	47.043	1.4	0.277	1.73	45'	EL	22	0.539	1.69	45'	EL	2.2	0.80	0.277	1.12	45'	EL	22	
		TNT7B	42.000	--	1.166	48.975	1.4	0.277	1.8	45'	EL	22	0.539	1.61	45'	EL	2.2	0.80	0.277	1.17	45'	EL	22	
		TNAGRIT4	43.000	--	1.111	47.757	1.4	0.277	1.71	45'	EL	22	0.539	1.55	45'	EL	2.2	0.80	0.277	1.11	45'	EL	22	
		TNAGT5A	45.000	--	1.033	46.505	1.4	0.277	1.59	45'	EL	22	0.539	1.59	45'	EL	2.2	0.80	0.277	1.03	45'	EL	22	
		TNAGT5B	45.000	--	1.009	45.408	1.4	0.277	1.56	45'	EL	22	0.539	1.47	45'	EL	2.2	0.80	0.277	1.01	45'	EL	22	

LOAD FACTORS:

	LIMIT STATE	γ_{DC}	γ_{DW}
DESIGN LOAD RATING FACTORS	STRENGTH I	1.25	1.50
	SERVICE III	1.00	1.00

NOTES:

MINIMUM RATING FACTORS ARE BASED ON THE STRENGTH I AND SERVICE III LIMIT STATES.

ALLOWABLE STRESSES FOR SERVICE III LIMIT STATE ARE AS REQUIRED FOR DESIGN.

COMMENTS:

1.
2.
3.
4.

CONTROLLING LOAD RATING

(1) DESIGN LOAD RATING (HL-93)

(2) DESIGN LOAD RATING (HS-20)

(3) LEGAL LOAD RATING **

** SEE CHART FOR VEHICLE TYPE

GIRDER LOCATION

I - INTERIOR GIRDER
EL - EXTERIOR LEFT GIRDER
ER - EXTERIOR RIGHT GIRDER

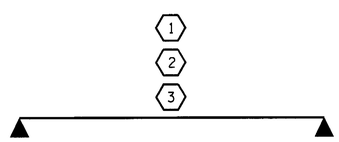

LRFR SUMMARY

FOR SPAN 'B'

PROJECT NO. B-4708
BEAUFORT COUNTY
STATION: 18+62.50 -L-

STATE OF NORTH CAROLINA
DEPARTMENT OF TRANSPORTATION
RALEIGH

STANDARD
LRFR SUMMARY FOR
45' CORED SLAB UNIT
90° SKEW
(NON-INTERSTATE TRAFFIC)

NORTH CAROLINA PROFESSIONAL SEAL 22008 ENGINEER KEITH PASCHAL
9.26.13

REVISIONS						SHEET NO.
NO.	BY:	DATE:	NO.	BY:	DATE:	S-4
1			3			TOTAL SHEETS
2			4			17

ASSEMBLED BY : M. D. PISO DATE :05-13-13
CHECKED BY : PEGGY ADKINS DATE :07-10-13
DRAWN BY : CVC 6/10
CHECKED BY : DNS 6/10

26-SEP-2013 07:37
S:\DPGI\Keith\B-4708\mdpiso\microstation\B-4708_SD_CS.dgn
kpaschal

STD. NO. 21LRFR1_90S_45L

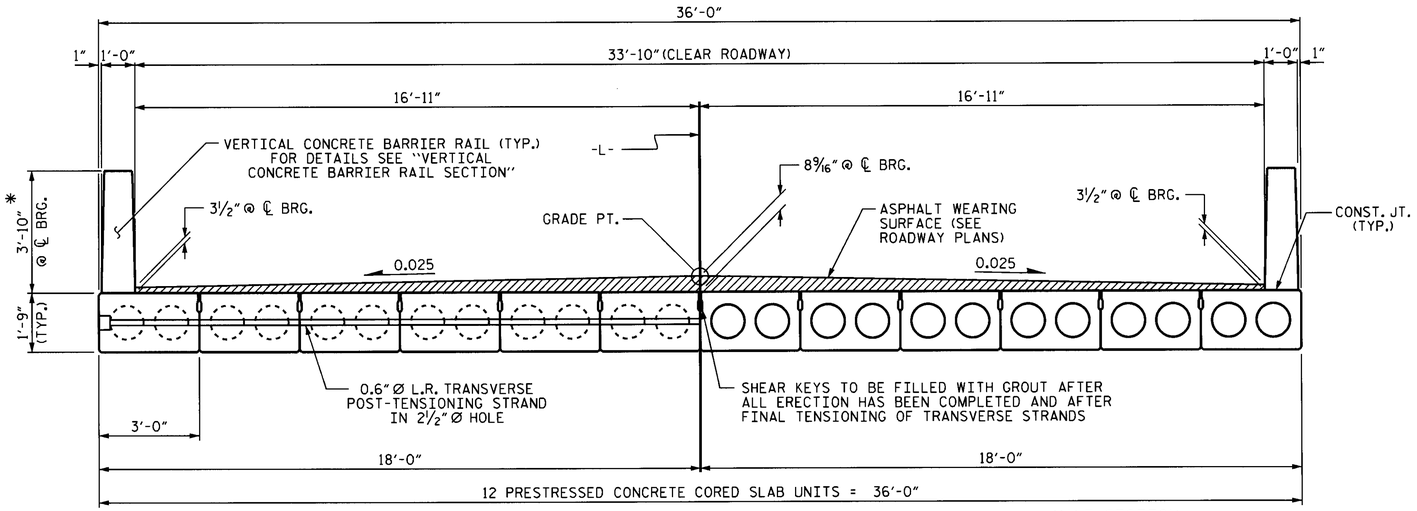

HALF SECTION
AT INTERMEDIATE DIAPHRAGMS

HALF SECTION
THROUGH VOIDS

TYPICAL SECTION

* - THE MAXIMUM BARRIER RAIL HEIGHT AND ASPHALT THICKNESS IS SHOWN. THE HEIGHT OF THE BARRIER RAIL AND ASPHALT THICKNESS VARIES WHILE THE TOP OF THE BARRIER RAIL FOLLOWS THE PROFILE OF THE GUTTERLINE. FOR RAIL HEIGHT DETAILS AND ASPHALT THICKNESS SEE THE "VERTICAL CONCRETE BARRIER RAIL SECTION" DETAIL.

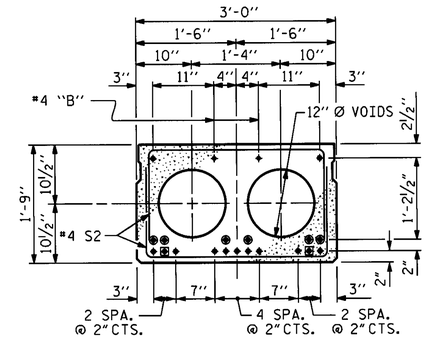

INTERIOR SLAB SECTION
(40' & 45' UNIT)
(13 STRANDS REQUIRED)

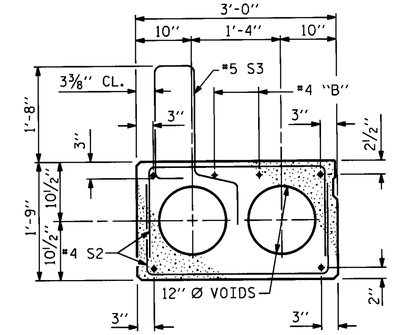

EXT. SLAB SECTION
(FOR PRESTRESSED STRAND LAYOUT, SEE INTERIOR SLAB SECTION.)

0.6" Ø LOW RELAXATION STRAND LAYOUT

◉ BOND SHALL BE BROKEN ON THESE STRANDS FOR A DISTANCE OF 2'-0" FROM END OF CORED SLAB UNIT. SEE STANDARD SPECIFICATIONS, ARTICLE 1078-7.

◉ OPTIONAL FULL LENGTH DEBONDED STRANDS. THESE STRANDS ARE NOT REQUIRED. IF THE FABRICATOR CHOOSES TO INCLUDE THESE STRANDS IN THE CORED SLAB UNIT, THE STRANDS SHALL BE DEBONDED FOR THE FULL LENGTH OF THE UNIT AT NO ADDITIONAL COST. SEE STANDARD SPECIFICATIONS, ARTICLE 1078-7.

DEBONDING LEGEND

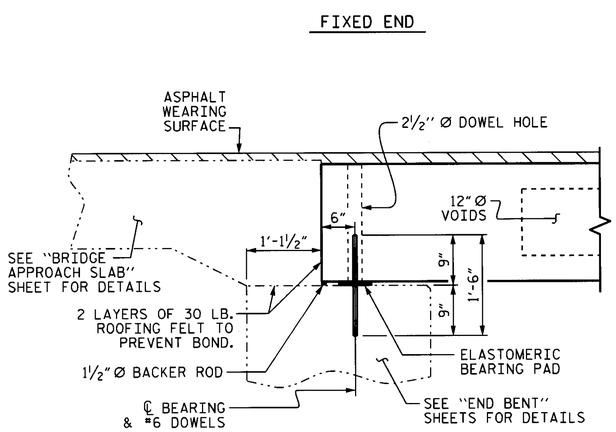

SECTION AT END BENT

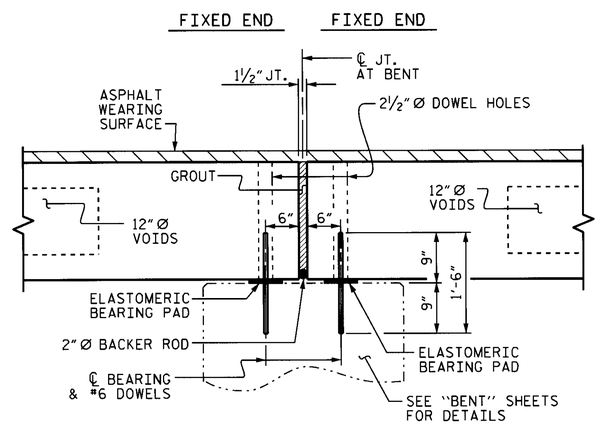

SECTION AT BENT

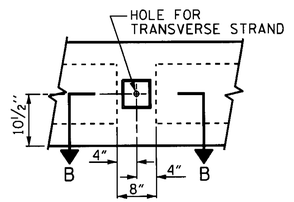

ELEVATION VIEW

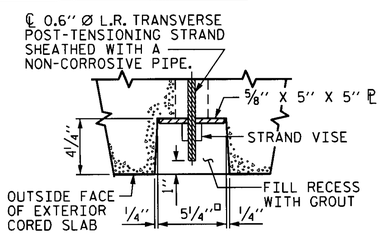

SECTION B-B

GROUTED RECESS AT END OF POST-TENSIONED STRAND OF CORED SLABS

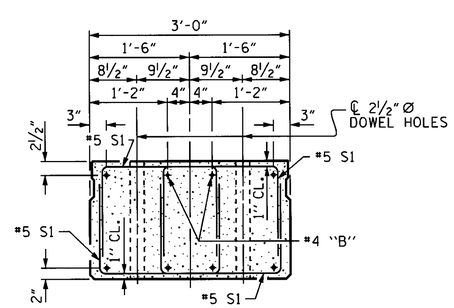

END ELEVATION

SHOWING PLACEMENT OF DOUBLE STIRRUPS AND LOCATION OF DOWEL HOLES. (STRAND LAYOUT NOT SHOWN.) INTERIOR SLAB UNIT SHOWN-EXTERIOR SLAB UNIT SIMILAR EXCEPT SHEAR KEY LOCATION.

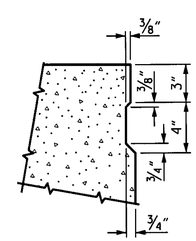

SHEAR KEY DETAIL

NOTE: OMIT SHEAR KEY ON OUTSIDE FACE OF EXTERIOR CORED SLABS.

PROJECT NO. B-4708
BEAUFORT COUNTY
STATION: 18+62.50 -L-

SHEET 1 OF 4

STATE OF NORTH CAROLINA
DEPARTMENT OF TRANSPORTATION
RALEIGH

STANDARD
3'-0" X 1'-9"
PRESTRESSED CONCRETE
CORED SLAB UNIT
90° SKEW

NORTH CAROLINA PROFESSIONAL SEAL 22008 ENGINEER A. KEITH PASCHAL
9.26.13

REVISIONS						SHEET NO.
NO.	BY:	DATE:	NO.	BY:	DATE:	S-5
1			3			TOTAL SHEETS
2			4			17

ASSEMBLED BY : M. D. PISO		DATE : 05-13-13	
CHECKED BY : PEGGY ADKINS		DATE : 07-10-13	
DRAWN BY : DGE	5/09	REV. 12/11	MAA/AAC
CHECKED BY : BCH	6/09		

STD. NO. 21" PCS2_36_90S

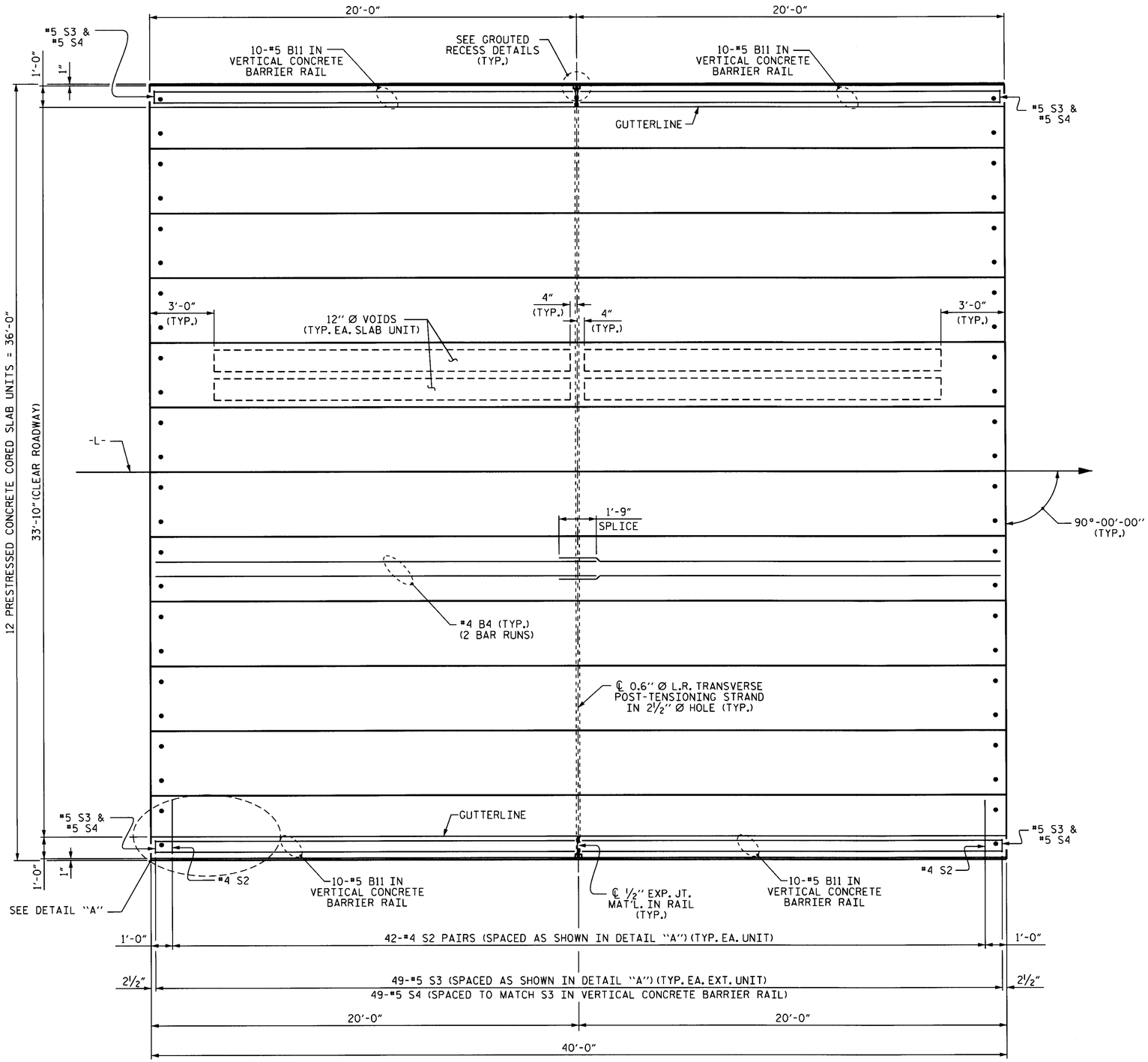

PLAN OF SPANS A & C

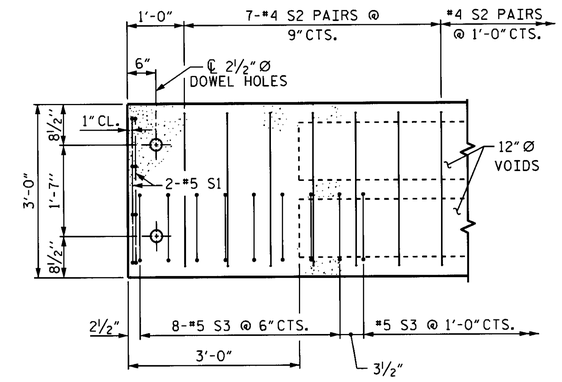

DETAIL "A"

NOTE: EXTERIOR UNIT SHOWN - INTERIOR UNIT SIMILAR EXCEPT OMIT #5 S3 BARS.

PROJECT NO. B-4708

BEAUFORT COUNTY

STATION: 18+62.50 -L-

SHEET 2 OF 4

STATE OF NORTH CAROLINA
DEPARTMENT OF TRANSPORTATION
RALEIGH

PLAN OF 40' UNIT
33'-10" CLEAR ROADWAY
90° SKEW

NORTH CAROLINA PROFESSIONAL SEAL 22004 ENGINEER KEITH PASCHAL
9.26.13

REVISIONS						SHEET NO.
NO.	BY:	DATE:	NO.	BY:	DATE:	S-6
1			3			TOTAL SHEETS
2			4			17

ASSEMBLED BY : M. D. PISO DATE : 05-13-13
CHECKED BY : PEGGY ADKINS DATE : 07-10-13
DRAWN BY : DGE 5/09
CHECKED BY: BCH 6/09
REV. 12/5/11 MAA/AAC

26-SEP-2013 07:36
S:\DPGI\Keith\B-4708\mdpiso\microstation\B-4708_SD_CS.dgn

STD. NO. 21" PCS_36_90S_40L

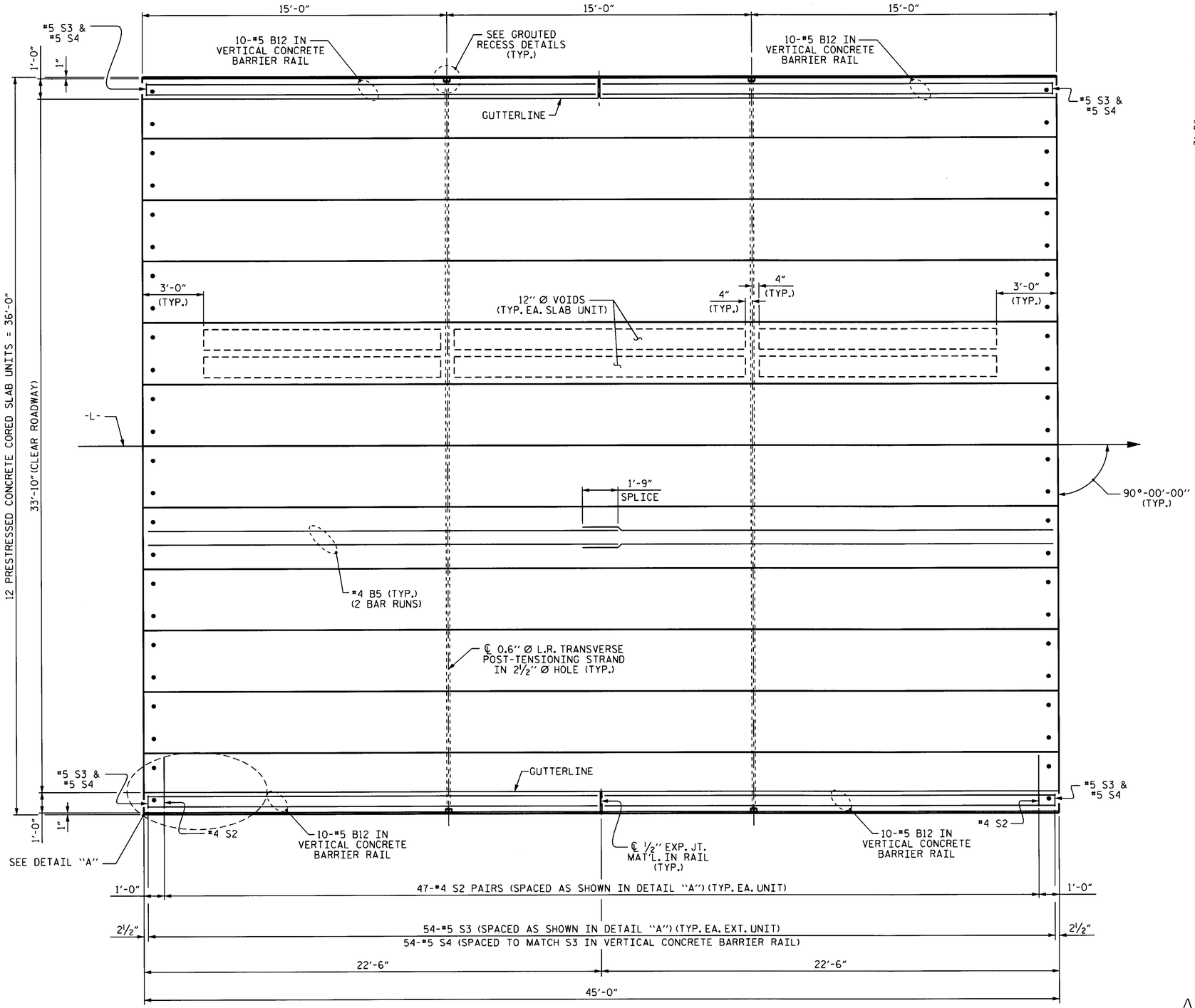

PLAN OF SPAN B

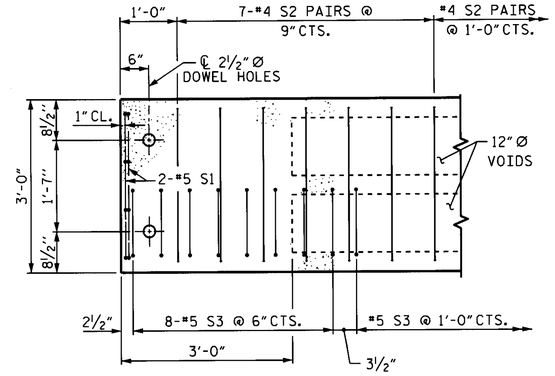

DETAIL "A"

NOTE: EXTERIOR UNIT SHOWN - INTERIOR UNIT SIMILAR EXCEPT OMIT #5 S3 BARS.

PROJECT NO. B-4708

BEAUFORT COUNTY

STATION: 18+62.50 -L-

SHEET 3 OF 4

STATE OF NORTH CAROLINA
DEPARTMENT OF TRANSPORTATION
RALEIGH

PLAN OF 45' UNIT 33'-10" CLEAR ROADWAY 90° SKEW

NORTH CAROLINA PROFESSIONAL SEAL 23005 ENGINEER A. KEITH PASCHAL
9.26.13

REVISIONS						SHEET NO.
NO.	BY:	DATE:	NO.	BY:	DATE:	S-7
1			3			TOTAL SHEETS
2			4			17

ASSEMBLED BY : M. D. PISO		DATE : 05-13-13	
CHECKED BY : PEGGY ADKINS		DATE : 07-10-13	
DRAWN BY : DGE 5/09	REV. 12/5/11 MAA/AAC		
CHECKED BY: BCH 6/09			

26-SEP-2013 07:36
S:\DPGI\Keith\B-4708\mdpiso\microstation\B-4708_SD_CS.dgn
kpaschal

STD. NO. 21" PCS_36_90S_45L

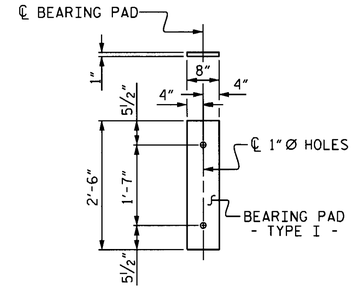

FIXED END
(TYPE I - 72 REQ'D.)

ELASTOMERIC BEARING DETAILS

ELASTOMER IN ALL BEARINGS SHALL BE 50 DUROMETER HARDNESS.

CORED SLABS REQUIRED			
	NUMBER	LENGTH	TOTAL LENGTH
40' UNIT			
EXTERIOR C.S.	4	40'-0"	160'-0"
INTERIOR C.S.	20	40'-0"	800'-0"
TOTAL	24	——	960'-0"

CORED SLABS REQUIRED			
	NUMBER	LENGTH	TOTAL LENGTH
45' UNIT			
EXTERIOR C.S.	2	45'-0"	90'-0"
INTERIOR C.S.	10	45'-0"	450'-0"
TOTAL	12	——	540'-0"

BILL OF MATERIAL FOR VERTICAL CONCRETE BARRIER RAIL

BAR	BARS PER PAIR OF EXTERIOR UNITS	TOTAL NO.	SIZE	TYPE	LENGTH	WEIGHT
	40' UNIT					
✱B11	40	2	#5	STR	19'-7"	1,634
✱S4	98	2	#5	2	7'-2"	1,465
✱EPOXY COATED REINFORCING STEEL					3,099	LBS.
CLASS AA CONCRETE					21.0	CU. YDS.
TOTAL VERTICAL CONCRETE BARRIER RAIL					160.5	LIN. FT.

BILL OF MATERIAL FOR VERTICAL CONCRETE BARRIER RAIL

BAR	BARS PER PAIR OF EXTERIOR UNITS	TOTAL NO.	SIZE	TYPE	LENGTH	WEIGHT
	45' UNIT					
✱B12	40	1	#5	STR	22'-1"	921
✱S4	108	1	#5	2	7'-2"	807
✱EPOXY COATED REINFORCING STEEL					1,728	LBS.
CLASS AA CONCRETE					11.8	CU. YDS.
TOTAL VERTICAL CONCRETE BARRIER RAIL					90.25	LIN. FT.

BAR TYPES

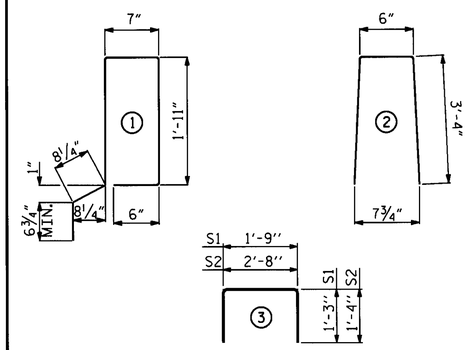

ALL BAR DIMENSIONS ARE OUT TO OUT

NOTES

ALL PRESTRESSING STRANDS SHALL BE 7-WIRE LOW RELAXATION GRADE 270 STRANDS AND SHALL CONFORM TO AASHTO M203 EXCEPT FOR SAMPLING REQUIREMENTS WHICH SHALL BE IN ACCORDANCE WITH THE STANDARD SPECIFICATIONS.

ALL REINFORCING STEEL CAST WITH THE CORED SLAB SECTIONS SHALL BE GRADE 60 AND SHALL BE INCLUDED IN THE UNIT PRICE BID FOR PRESTRESSED CONCRETE CORED SLABS.

RECESSES FOR TRANSVERSE STRANDS SHALL BE GROUTED AFTER THE TENSIONING OF THE STRANDS.

THE 2½"Ø DOWEL HOLES AT FIXED ENDS OF SLAB SECTIONS SHALL BE FILLED WITH NON-SHRINK GROUT.

THE BACKER RODS SHALL CONFORM TO THE REQUIREMENTS OF TYPE M BOND BREAKER. SEE SECTION 1028 OF THE STANDARD SPECIFICATIONS.

WHEN CORED SLABS ARE CAST, AN INTERNAL HOLD-DOWN SYSTEM SHALL BE EMPLOYED TO PREVENT VOIDS FROM RISING OR MOVING SIDEWAYS. AT LEAST SIX WEEKS PRIOR TO CASTING CORED SLABS, THE CONTRACTOR SHALL SUBMIT TO THE ENGINEER FOR REVIEW AND COMMENT, DETAILED DRAWINGS OF THE PROPOSED HOLD-DOWN SYSTEM. IN ADDITION TO STRUCTURAL DETAILS, LOCATION AND SPACING OF THE HOLD-DOWNS SHALL BE INDICATED.

ALL REINFORCING STEEL IN THE VERTICAL CONCRETE BARRIER RAIL SHALL BE EPOXY COATED.

PRESTRESSING STRANDS SHALL BE CUT FLUSH WITH THE CORED SLAB UNIT ENDS.

APPLY EPOXY PROTECTIVE COATING TO CORED SLAB UNIT ENDS.

GROOVED CONTRACTION JOINTS, ½" IN DEPTH, SHALL BE TOOLED IN ALL EXPOSED FACES OF THE BARRIER RAIL AND IN ACCORDANCE WITH ARTICLE 825-10(B) OF THE STANDARD SPECIFICATIONS. A CONTRACTION JOINT SHALL BE LOCATED AT EACH THIRD POINT BETWEEN BARRIER RAIL EXPANSION JOINTS. ONLY ONE CONTRACTION JOINT IS REQUIRED AT MIDPOINT OF BARRIER RAIL SEGMENTS LESS THAN 20 FEET IN LENGTH AND NO CONTRACTION JOINTS ARE REQUIRED FOR THOSE SEGMENTS LESS THAN 10 FEET IN LENGTH.

TRANSVERSE POST TENSIONING OF THE CORED SLAB UNITS SHALL BE DONE IN ACCORDANCE WITH THE STANDARD SPECIFICATIONS.

THE TRANSFER OF LOAD FROM THE ANCHORAGES TO THE CORED SLAB UNIT SHALL BE DONE WHEN THE CONCRETE HAS REACHED A COMPRESSIVE STRENGTH OF NOT LESS THAN THE REQUIRED STRENGTH SHOWN IN THE "CONCRETE RELEASE STRENGTH" TABLE.

FOR GROUT FOR STRUCTURES, SEE SPECIAL PROVISIONS.

GUTTERLINE ASPHALT THICKNESS & RAIL HEIGHT

33'-10" CLEAR ROADWAY	ASPHALT OVERLAY THICKNESS	RAIL HEIGHT
	@ MID-SPAN	@ MID-SPAN
	NORMAL CROWN SECTION	
40' & 45' UNITS	2⅜"	3'-8⅞"

CONCRETE RELEASE STRENGTH

UNIT	PSI
40' & 45' UNITS	4000

BILL OF MATERIAL FOR ONE 40' CORED SLAB UNIT

BAR	NUMBER	SIZE	TYPE	EXTERIOR UNIT LENGTH	EXTERIOR UNIT WEIGHT	INTERIOR UNIT LENGTH	INTERIOR UNIT WEIGHT
B4	4	#4	STR	20'-9"	55	20'-9"	55
S1	8	#5	3	4'-3"	35	4'-3"	35
S2	84	#4	3	5'-4"	299	5'-4"	299
✱S3	49	#5	1	6'-2"	315		
REINFORCING STEEL			LBS.		389		389
✱EPOXY COATED REINFORCING STEEL			LBS.		315		
6500 P.S.I. CONCRETE			CU. YDS.		5.8		5.8
0.6" Ø L.R. STRANDS			No.		13		13

BILL OF MATERIAL FOR ONE 45' CORED SLAB UNIT

BAR	NUMBER	SIZE	TYPE	EXTERIOR UNIT LENGTH	EXTERIOR UNIT WEIGHT	INTERIOR UNIT LENGTH	INTERIOR UNIT WEIGHT
B5	4	#4	STR	23'-3"	62	23'-3"	62
S1	8	#5	3	4'-3"	35	4'-3"	35
S2	94	#4	3	5'-4"	335	5'-4"	335
✱S3	54	#5	1	6'-2"	347		
REINFORCING STEEL			LBS.		432		432
✱EPOXY COATED REINFORCING STEEL			LBS.		347		
6500 P.S.I. CONCRETE			CU. YDS.		6.5		6.5
0.6" Ø L.R. STRANDS			No.		13		13

DEAD LOAD DEFLECTION AND CAMBER

	3'-0" x 1'-9"
40' & 45' CORED SLAB UNIT	0.6" Ø L.R. STRAND
CAMBER (SLAB ALONE IN PLACE)	1¼" ↑
DEFLECTION DUE TO SUPERIMPOSED DEAD LOAD✱✱	⅛" ↓
FINAL CAMBER	1⅛" ↑

✱✱ INCLUDES FUTURE WEARING SURFACE

GRADE 270 STRANDS

	0.6" Ø L.R.
AREA (SQUARE INCHES)	0.217
ULTIMATE STRENGTH (LBS. PER STRAND)	58,600
APPLIED PRESTRESS (LBS. PER STRAND)	43,950

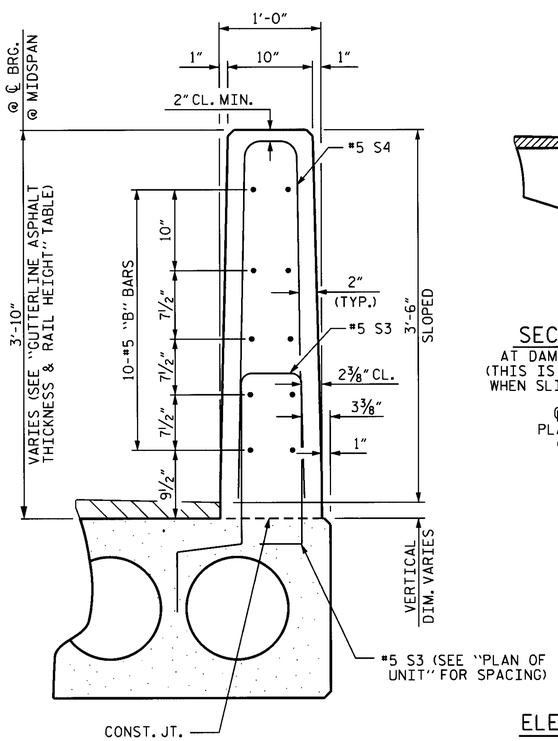

VERTICAL CONCRETE BARRIER RAIL SECTION

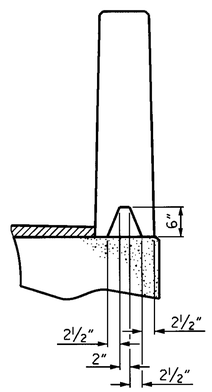

SECTION S-S
AT DAM IN OPEN JOINT
(THIS IS TO BE USED ONLY WHEN SLIP FORM IS USED)

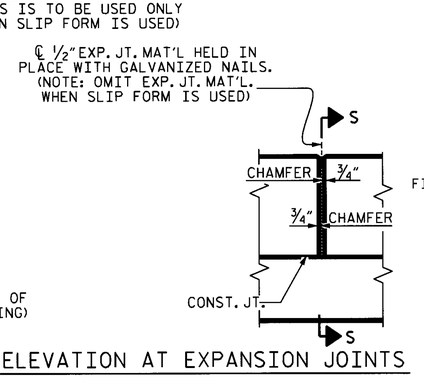

ELEVATION AT EXPANSION JOINTS

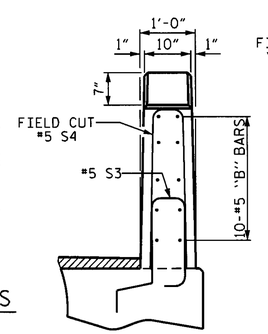

END VIEW

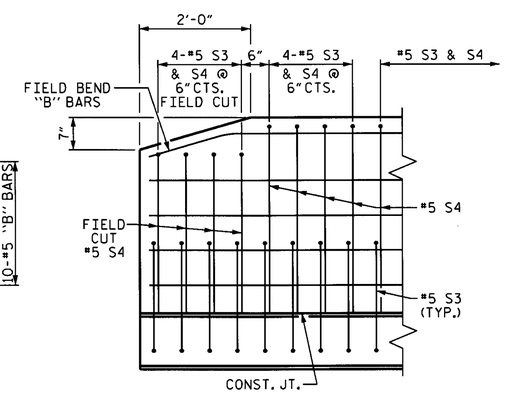

SIDE VIEW

END OF RAIL DETAILS

PROJECT NO. B-4708
BEAUFORT COUNTY
STATION: 18+62.50 -L-

SHEET 4 OF 4

STATE OF NORTH CAROLINA
DEPARTMENT OF TRANSPORTATION
RALEIGH

STANDARD
3'-0" X 1'-9"
PRESTRESSED CONCRETE
CORED SLAB UNIT
90° SKEW

NORTH CAROLINA PROFESSIONAL SEAL 22005 ENGINEER K. KEITH PASCHAL
9.26.13

REVISIONS								SHEET NO.
NO.	BY:	DATE:	NO.	BY:	DATE:			S-8
1			3					TOTAL SHEETS
2			4					17

ASSEMBLED BY :	M. D. PISO	DATE :	05-13-13
CHECKED BY :	PEGGY ADKINS	DATE :	07-10-13
DRAWN BY :	DGE 5/09	REV. 12/11	MAA/AAC
CHECKED BY :	BCH 6/09		

26-SEP-2013 12:20
S:\DPGI\Keith\B-4708\mdpiso\microstation\B-4708_SD_CS.dgn
kpaschal

STD. NO. 21" PCS3_36_90S

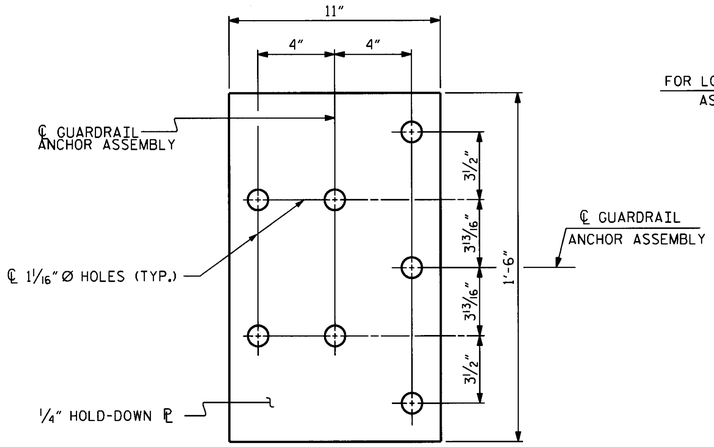

PLAN

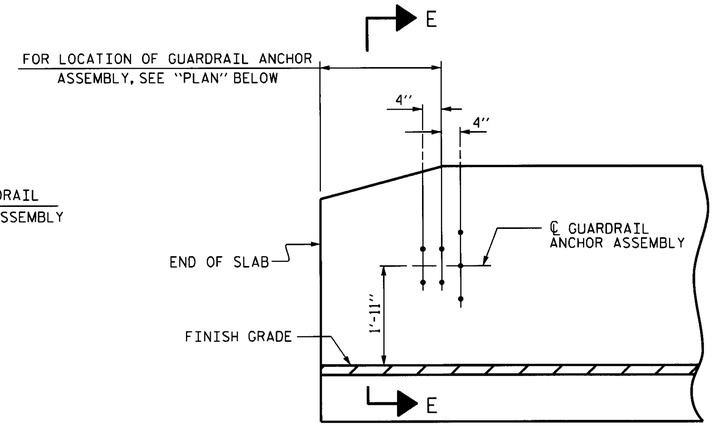

ELEVATION

NOTES

THE GUARDRAIL ANCHOR ASSEMBLY SHALL CONSIST OF A 1/4" HOLD DOWN PLATE AND 7 - 7/8" Ø BOLTS WITH NUTS AND WASHERS.

THE HOLD-DOWN PLATE SHALL CONFORM TO AASHTO M270 GRADE 36. AFTER FABRICATION, THE HOLD-DOWN PLATE SHALL BE HOT-DIP GALVANIZED IN ACCORDANCE WITH AASHTO M111.

BOLTS SHALL CONFORM TO THE REQUIREMENTS OF ASTM A307 AND NUTS SHALL CONFORM TO THE REQUIREMENTS OF AASHTO M291. BOLTS, NUTS AND WASHERS SHALL BE GALVANIZED. (AT THE CONTRACTOR'S OPTION, STAINLESS STEEL BOLTS, NUTS AND WASHERS MAY BE USED AS AN ALTERNATE FOR THE 7/8" Ø GALVANIZED BOLTS, NUTS AND WASHERS. THEY SHALL CONFORM TO OR EXCEED THE MECHANICAL REQUIREMENTS OF ASTM A307. THE USE OF THIS ALTERNATE SHALL BE APPROVED BY THE ENGINEER.)

THE GUARDRAIL ANCHOR ASSEMBLY IS REQUIRED AT ALL POINTS WHERE APPROACH GUARDRAIL IS TO BE ATTACHED TO THE END OF BARRIER RAIL. FOR POINTS OF ATTACHMENT, SEE SKETCH.

AFTER INSTALLATION, THE EXPOSED THREAD OF THE BOLT SHALL BE BURRED WITH A SHARP POINTED TOOL.

THE COST OF THE GUARDRAIL ANCHOR ASSEMBLY SHALL BE INCLUDED IN THE UNIT CONTRACT PRICE BID FOR VERTICAL CONCRETE BARRIER RAIL.

THE VERTICAL REINFORCING BARS MAY BE SHIFTED SLIGHTLY IN THE VERTICAL CONCRETE BARRIER RAIL TO CLEAR ASSEMBLY BOLTS.

THE 1 1/4" Ø HOLES SHALL BE FORMED OR DRILLED WITH A CORE BIT. IMPACT TOOLS WILL NOT BE PERMITTED. ANY CONCRETE DAMAGED BY THIS WORK SHALL BE REPAIRED TO THE SATISFACTION OF THE ENGINEER.

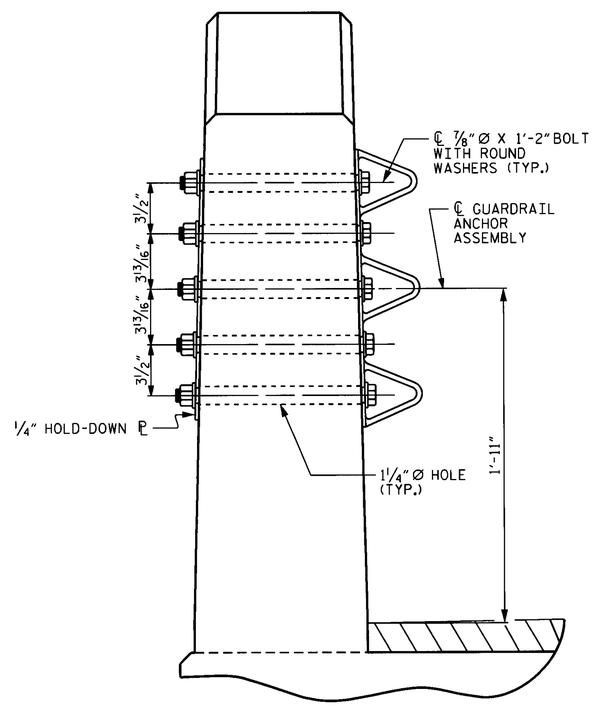

SECTION E-E

GUARDRAIL ANCHOR ASSEMBLY DETAILS

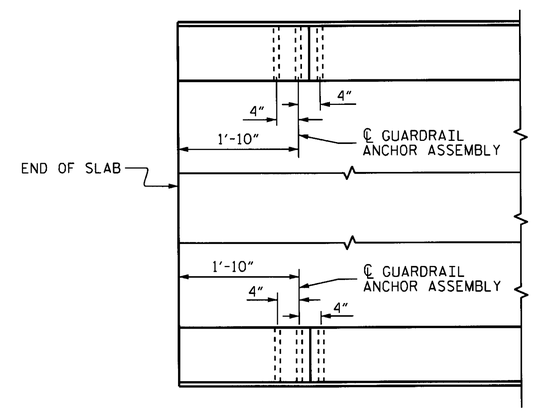

PLAN

LOCATION OF ANCHORS FOR GUARDRAIL

END BENT #1 SHOWN, END BENT #2 SIMILAR.

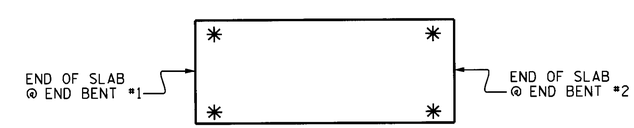

SKETCH SHOWING POINTS OF ATTACHMENT

✳ DENOTES GUARDRAIL ANCHOR ASSEMBLY

PROJECT NO. B-4708
BEAUFORT COUNTY
STATION: 18+62.50 -L-

STATE OF NORTH CAROLINA
DEPARTMENT OF TRANSPORTATION
RALEIGH

STANDARD
GUARDRAIL ANCHORAGE FOR VERTICAL CONCRETE BARRIER RAIL

NORTH CAROLINA PROFESSIONAL SEAL 22006 ENGINEER A. KEITH PASCHAL
9-26-13

REVISIONS						SHEET NO.
NO.	BY:	DATE:	NO.	BY:	DATE:	S-9
1			3			TOTAL SHEETS
2			4			17

ASSEMBLED BY : M. D. PISO	DATE : 08-30-13
CHECKED BY : PEGGY ADKINS	DATE : 09-10-13
DRAWN BY : MAA 5/10	REV. 10/1/11 MAA/GM
CHECKED BY : GM 5/10	REV. 12/5/11 MAA/GM
	REV. 6/13 MAA/GM

26-SEP-2013 08:08
S:\DPG1\Keith\B-4708\mdpiso\microstation\B-4708_SD_CS.dgn

(SHT 1) STD. NO. GRA3

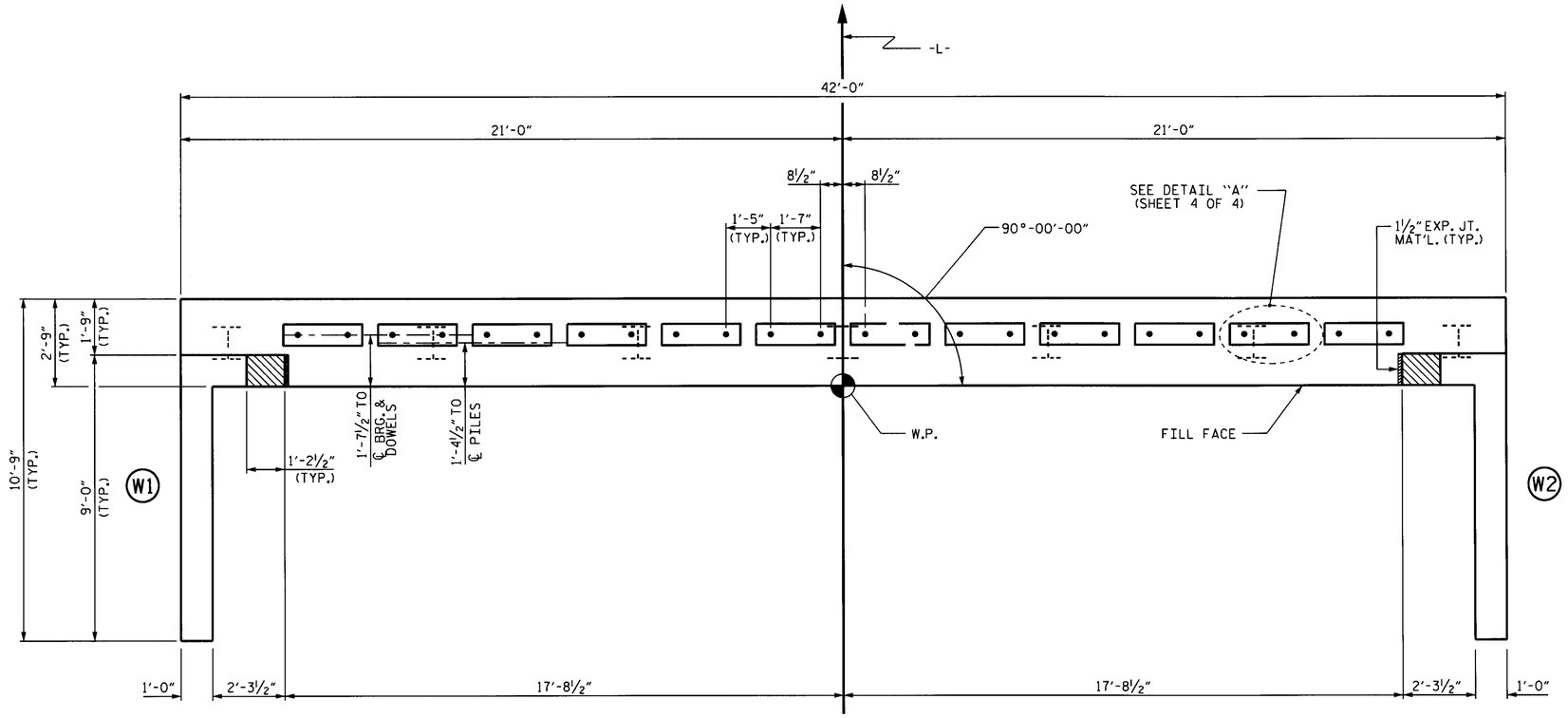

PLAN

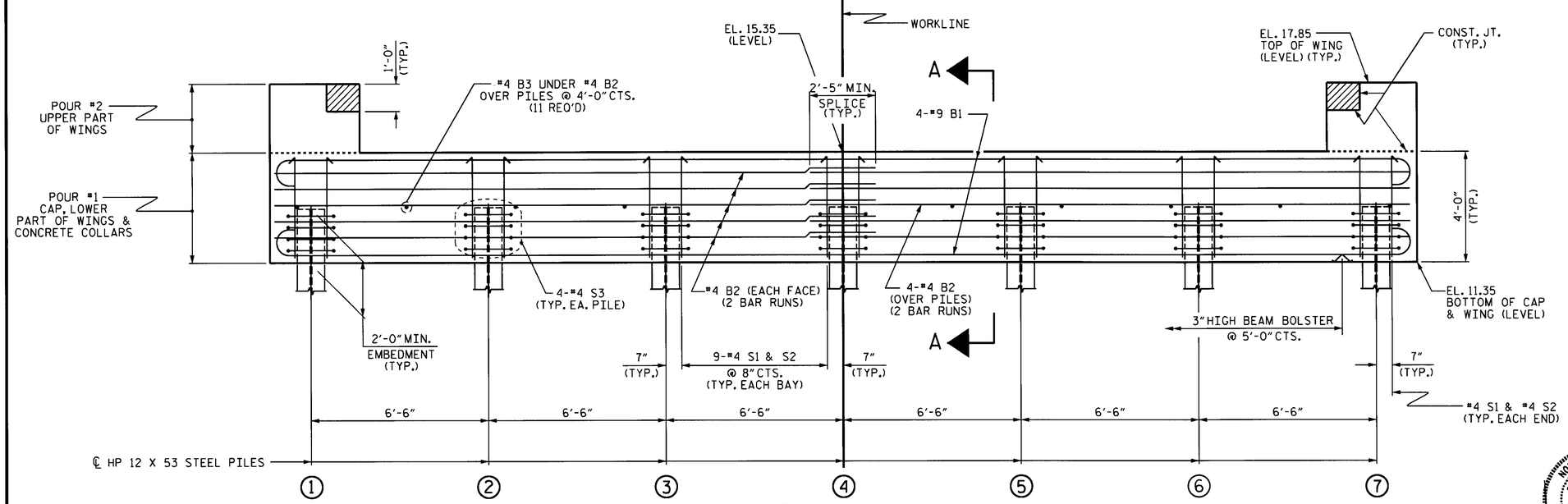

ELEVATION

WINGS NOT SHOWN FOR CLARITY.
FOR SECTION A-A, SEE SHEET 4 OF 4.
CONCRETE COLLARS FOR STEEL PILES NOT SHOWN IN PLAN AND ELEVATION VIEWS FOR CLARITY.
SEE "CORROSION PROTECTION FOR STEEL PILES DETAIL", SHEET 4 OF 4.

NOTES

STIRRUPS IN CAP MAY BE SHIFTED AS NECESSARY TO CLEAR DOWELS.

THE CONCRETE IN THE SHADED AREA OF THE WING SHALL BE POURED AFTER THE VERTICAL CONCRETE BARRIER RAIL IS CAST IF SLIP FORMING IS USED.

FOR PILE SPLICE DETAILS, SEE SHEET 4 OF 4.

FOR WING DETAILS, SEE SHEET 3 OF 4.

INSTALL THE 4" Ø DRAIN PIPE THROUGH THE WING WALL AS REQUIRED. FOR REINFORCED BRIDGE APPROACH FILLS, SEE THE ROADWAY PLANS. REINFORCING STEEL IN THE WING WALL MAY BE SHIFTED AS NECESSARY TO CLEAR THE DRAIN PIPE.

PROJECT NO. B-4708
BEAUFORT COUNTY
STATION: 18+62.50-L-

SHEET 1 OF 4

STATE OF NORTH CAROLINA
DEPARTMENT OF TRANSPORTATION
RALEIGH

SUBSTRUCTURE

END BENT No. 1

NORTH CAROLINA PROFESSIONAL SEAL 22005 ENGINEER R. KEITH PASCHAL
9.26.13

REVISIONS						SHEET NO.
NO.	BY:	DATE:	NO.	BY:	DATE:	S-10
1			3			TOTAL SHEETS
2			4			17

ASSEMBLED BY : M. D. PISO DATE : 05-13-13
CHECKED BY : PEGGY ADKINS DATE : 07-10-13
DRAWN BY : WJH 12/11
CHECKED BY : AAC 12/11

26-SEP-2013 07:29
S:\DPG1\Keith\B-4708\mdpiso\microstation\B-4708_SD_CS.dgn

STD. NO. EB_36_90S4

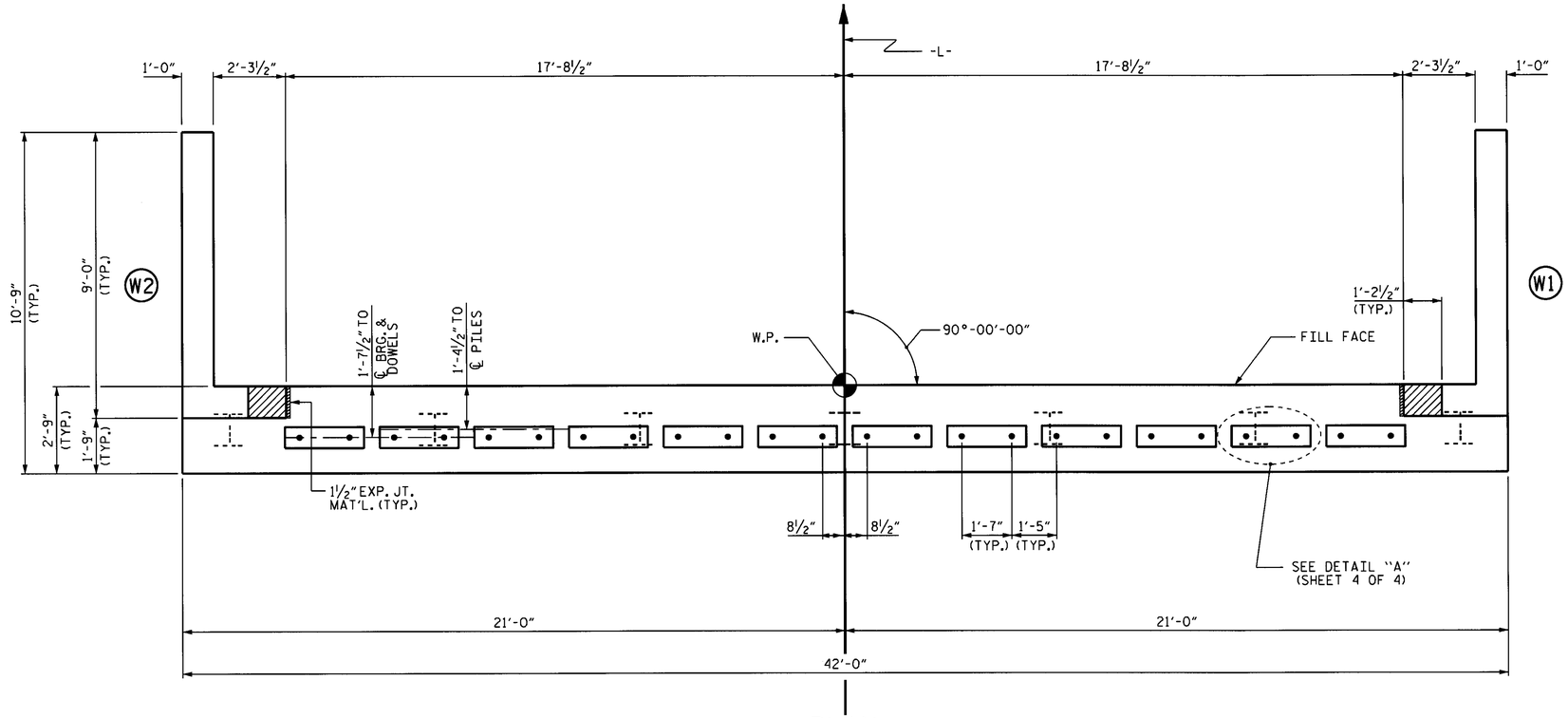

PLAN

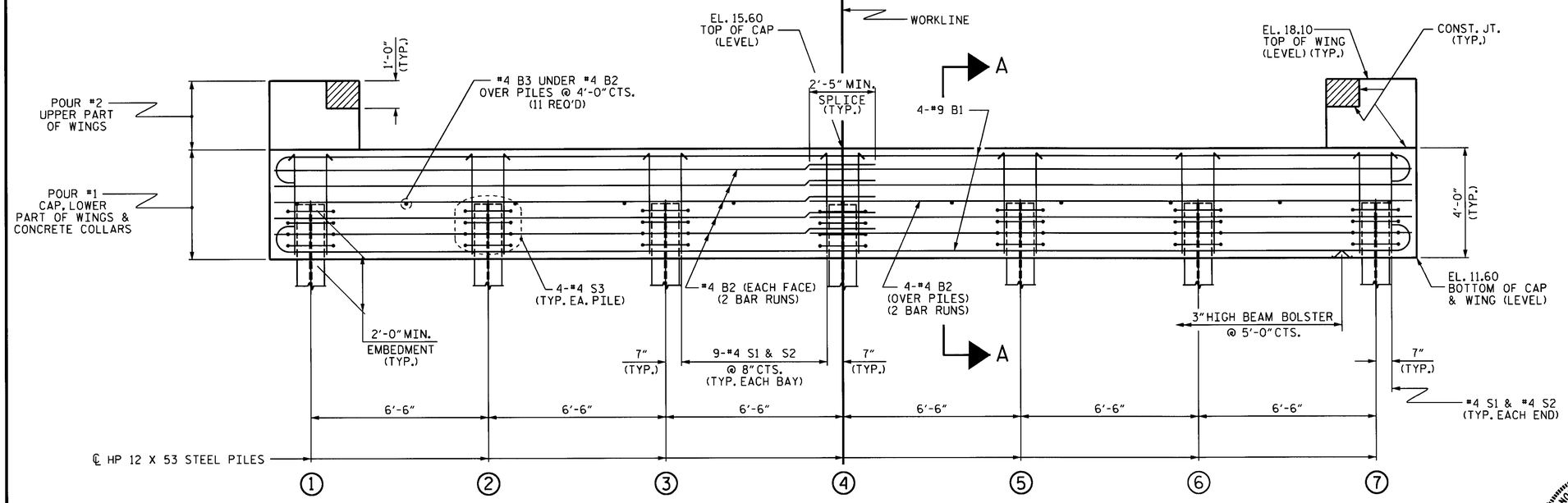

ELEVATION

WINGS NOT SHOWN FOR CLARITY.
FOR SECTION A-A, SEE SHEET 4 OF 4.
CONCRETE COLLARS FOR STEEL PILES NOT SHOWN IN PLAN AND ELEVATION VIEWS FOR CLARITY.
SEE "CORROSION PROTECTION FOR STEEL PILES DETAIL", SHEET 4 OF 4.

NOTES

STIRRUPS IN CAP MAY BE SHIFTED AS NECESSARY TO CLEAR DOWELS.

THE CONCRETE IN THE SHADED AREA OF THE WING SHALL BE POURED AFTER THE VERTICAL CONCRETE BARRIER RAIL IS CAST IF SLIP FORMING IS USED.

FOR PILE SPLICE DETAILS, SEE SHEET 4 OF 4.

FOR WING DETAILS, SEE SHEET 3 OF 4.

INSTALL THE 4" Ø DRAIN PIPE THROUGH THE WING WALL AS REQUIRED. FOR REINFORCED BRIDGE APPROACH FILLS, SEE THE ROADWAY PLANS. REINFORCING STEEL IN THE WING WALL MAY BE SHIFTED AS NECESSARY TO CLEAR THE DRAIN PIPE.

PROJECT NO. B-4708
BEAUFORT COUNTY
STATION: 18+62.50-L-

SHEET 2 OF 4

STATE OF NORTH CAROLINA
DEPARTMENT OF TRANSPORTATION
RALEIGH

SUBSTRUCTURE

END BENT No. 2

NORTH CAROLINA PROFESSIONAL SEAL 22004 ENGINEER A. KEITH PASCHAL
9.26.13

REVISIONS							SHEET NO.
NO.	BY:	DATE:	NO.	BY:	DATE:		S-11
1			3				TOTAL SHEETS
2			4				17

ASSEMBLED BY : M. D. PISO	DATE : 05-13-13
CHECKED BY : PEGGY ADKINS	DATE : 07-10-13
DRAWN BY : WJH 12/11	
CHECKED BY : AAC 12/11	

26-SEP-2013 07:29
S:\DPG1\Keith\B-4708\mdpiso\microstation\B-4708_SD_CS.dgn
kpaschal

STD. NO. EB_36_90S4

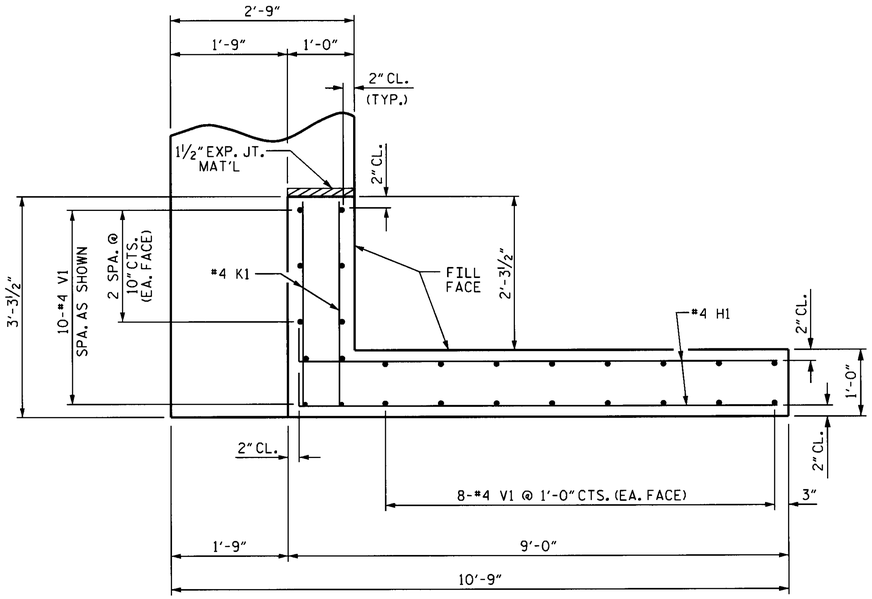

PLAN OF WING (W1)

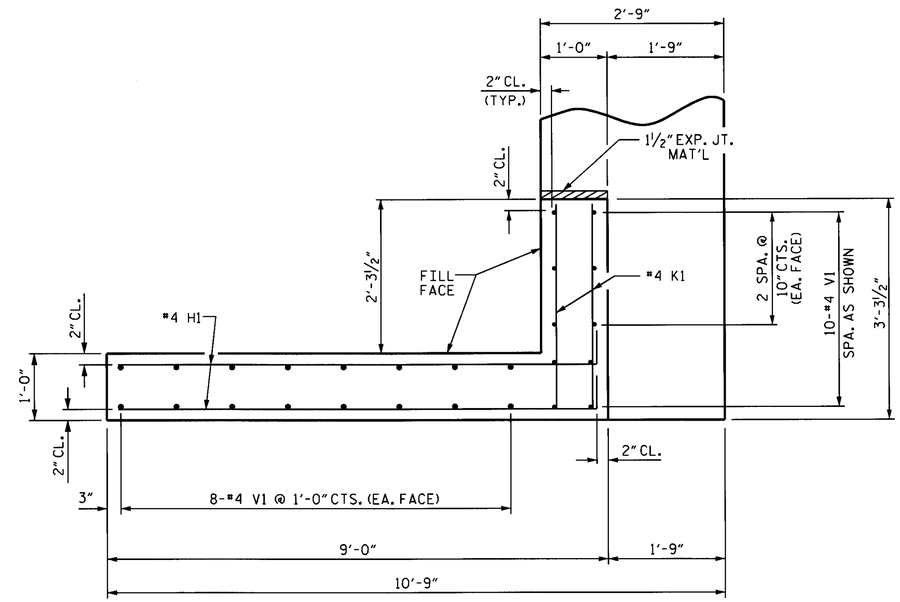

PLAN OF WING (W2)

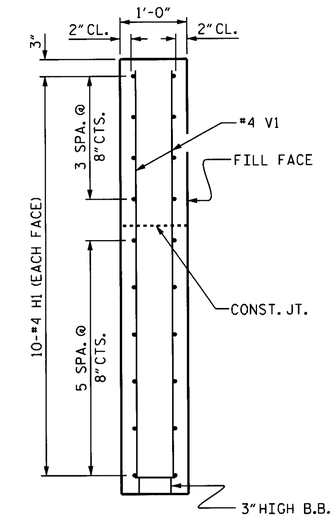

SECTION X-X

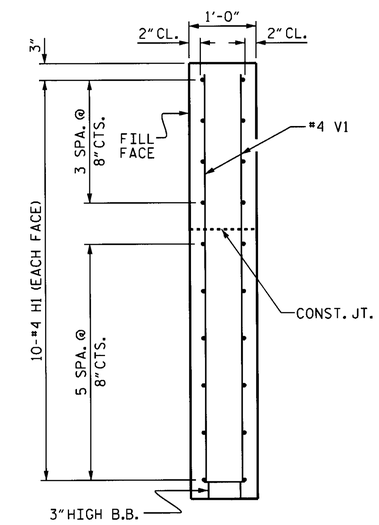

SECTION Y-Y

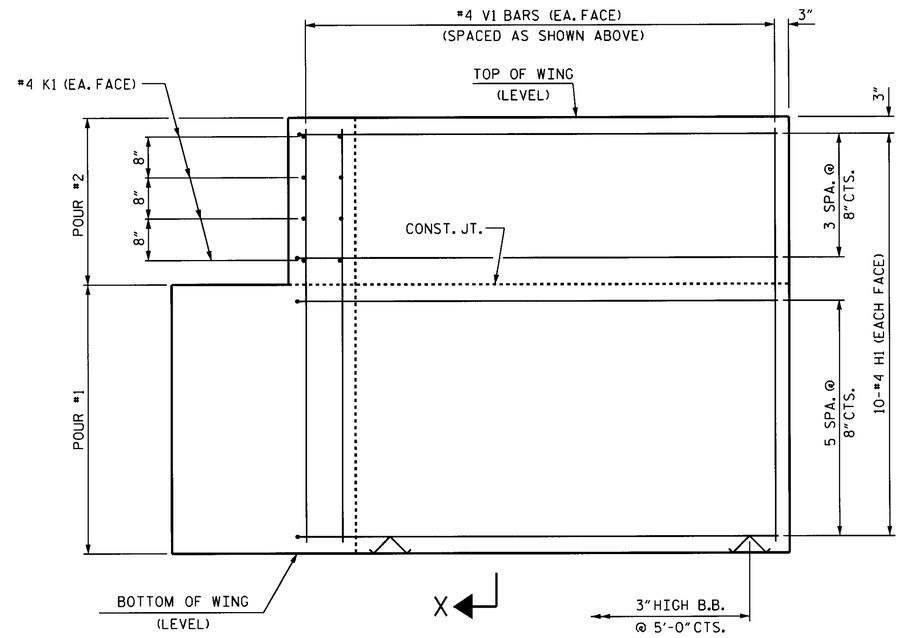

ELEVATION OF WING (W1)

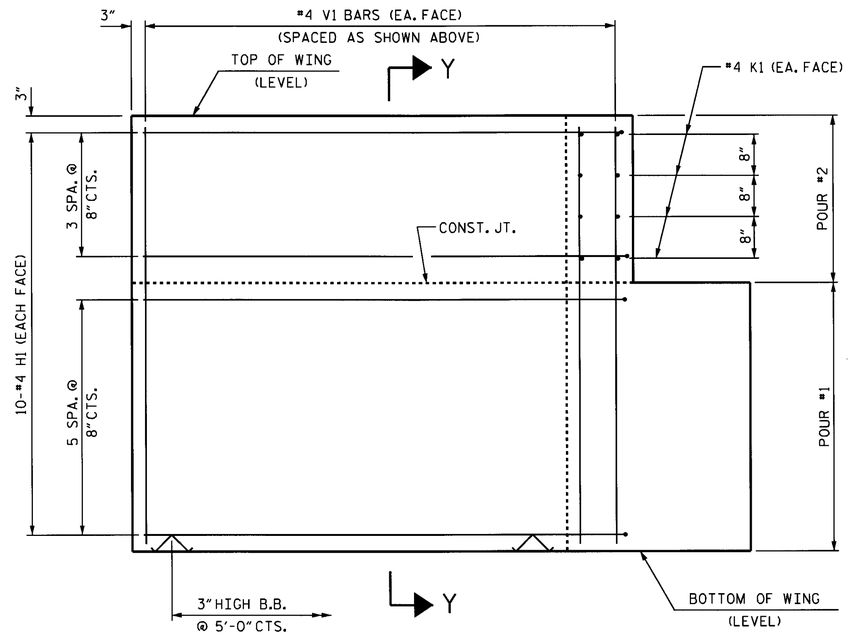

ELEVATION OF WING (W2)

WING DETAILS

PROJECT NO. B4708

BEAUFORT COUNTY

STATION: 18+62.50 -L-

SHEET 3 OF 4

STATE OF NORTH CAROLINA
DEPARTMENT OF TRANSPORTATION
RALEIGH

SUBSTRUCTURE

END BENT
WING DETAILS

NORTH CAROLINA PROFESSIONAL SEAL 22006 ENGINEER KEITH PASCHAL
9.26.13

ASSEMBLED BY : M. D. PISO	DATE : 05-13-13
CHECKED BY : PEGGY ADKINS	DATE : 07-10-13
DRAWN BY : WJH 12/11	
CHECKED BY : AAC 12/11	

REVISIONS								SHEET NO.
NO.	BY:	DATE:	NO.	BY:	DATE:			S-12
1			3					TOTAL SHEETS
2			4					17

26-SEP-2013 07:29
S:\DPCI\Keith\B-4708\mdpiso\microstation\B-4708_SD_CS.dgn
kpaschal

STD. NO. EB_36_90S4

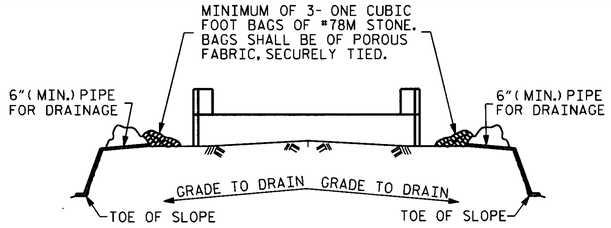

BAGGED STONE AND PIPE SHALL BE PLACED IMMEDIATELY AFTER COMPLETION OF END BENT EXCAVATION. PIPE MAY BE EITHER CONCRETE, CORRUGATED STEEL, CORRUGATED ALUMINUM ALLOY, OR CORRUGATED PLASTIC. PERFORATED PIPE WILL NOT BE ALLOWED.

BAGGED STONE SHALL REMAIN IN PLACE UNTIL THE ENGINEER DIRECTS THAT IT BE REMOVED. THE CONTRACTOR SHALL REMOVE AND DISPOSE OF SILT ACCUMULATIONS AT BAGGED STONE WHEN SO DIRECTED BY THE ENGINEER. BAGS SHALL BE REMOVED AND REPLACED WHENEVER THE ENGINEER DETERMINES THAT THEY HAVE DETERIORATED AND LOST THEIR EFFECTIVENESS.

NO SEPARATE PAYMENT WILL BE MADE FOR THIS WORK AND THE ENTIRE COST OF THIS WORK SHALL BE INCLUDED IN THE UNIT CONTRACT PRICE BID FOR THE SEVERAL PAY ITEMS.

TEMPORARY DRAINAGE AT END BENT

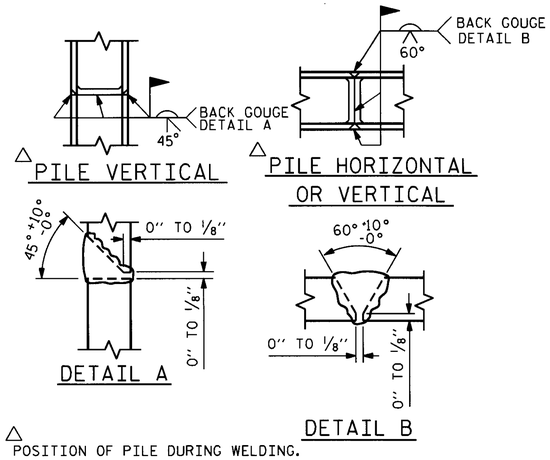

△ POSITION OF PILE DURING WELDING.

PILE SPLICE DETAILS

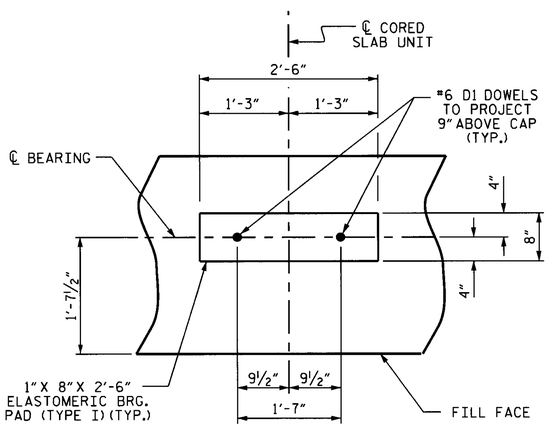

DETAIL "A"

(END BENT No. 1 SHOWN, END BENT No. 2 SIMILAR BY ROTATION)

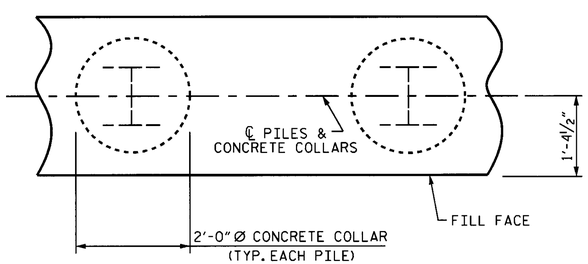

PLAN

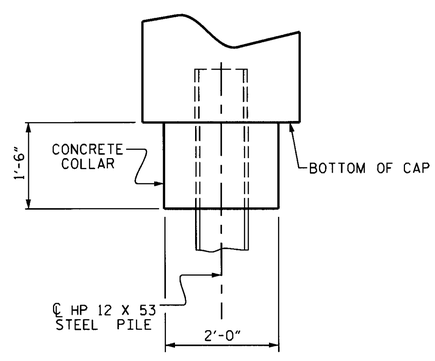

ELEVATION

CORROSION PROTECTION FOR STEEL PILES DETAIL

(END BENT No. 1 SHOWN, END BENT No. 2 SIMILAR BY ROTATION)

BAR TYPES

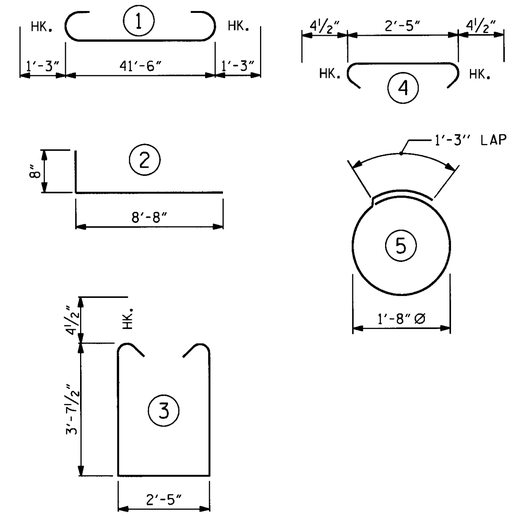

ALL BAR DIMENSIONS ARE OUT TO OUT.

END BENT No. 1		END BENT No. 2	
HP 12 X 53 STEEL PILES		HP 12 X 53 STEEL PILES	
NO: 7	420 LIN. FT.	NO: 7	420 LIN. FT.
PILE REDRIVES	4 EACH	PILE REDRIVES	4 EACH

BILL OF MATERIAL FOR ONE END BENT

BAR	NO.	SIZE	TYPE	LENGTH	WEIGHT
B1	8	#9	1	44'-0"	1197
B2	28	#4	STR	22'-1"	413
B3	11	#4	STR	2'-5"	18
D1	24	#6	STR	1'-6"	54
H1	40	#4	2	9'-4"	249
K1	16	#4	STR	2'-11"	31
S1	56	#4	3	10'-5"	390
S2	56	#4	4	3'-2"	118
S3	28	#4	5	6'-6"	122
V1	52	#4	STR	6'-2"	214

REINFORCING STEEL (FOR ONE END BENT) 2806 LBS.

CLASS A CONCRETE BREAKDOWN (FOR ONE END BENT)

POUR #1	CAP, LOWER PART OF WINGS & COLLARS	20.7 C.Y.
POUR #2	UPPER PART OF WINGS	2.1 C.Y.
TOTAL CLASS A CONCRETE		22.8 C.Y.

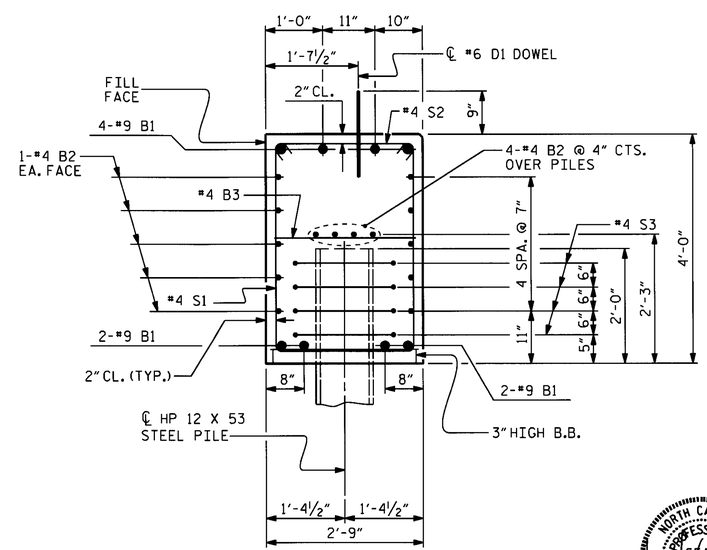

SECTION A-A

(CONCRETE COLLAR NOT SHOWN FOR CLARITY. SEE "CORROSION PROTECTION FOR STEEL PILES DETAIL.")

NORTH CAROLINA PROFESSIONAL SEAL 22005 ENGINEER M. KEITH PASCHAL
9-26-13

PROJECT NO. B-4708
BEAUFORT COUNTY
STATION: 18+62.50-L-

SHEET 4 OF 4

STATE OF NORTH CAROLINA
DEPARTMENT OF TRANSPORTATION
RALEIGH

SUBSTRUCTURE

END BENT No. 1 & 2 DETAILS

REVISIONS						SHEET NO.
NO.	BY:	DATE:	NO.	BY:	DATE:	S-13
1			3			TOTAL SHEETS
2			4			17

ASSEMBLED BY :	M. D. PISO	DATE :	05-13-13
CHECKED BY :	PEGGY ADKINS	DATE :	07-10-13
DRAWN BY :	WJH	12/11	
CHECKED BY :	AAC	12/11	

26-SEP-2013 07:28
S:\DPGI\Keith\B-4708\mdpiso\microstation\B-4708_SD_CS.dgn
kpaschal

STD. NO. EB_36_90S4

NOTES

STIRRUPS IN CAP MAY BE SHIFTED AS NECESSARY TO CLEAR DOWELS.

THE LATERAL GUIDES ARE NOT TO BE POURED UNTIL AFTER THE CORED SLAB UNITS ARE IN PLACE.

★ INVERT ALTERNATE STIRRUPS.

GALVANIZE THE TOP OF EACH INTERIOR BENT PILE A MINIMUM OF 30.0 FEET. GALVANIZE IN ACCORDANCE WITH SECTION 1076 OF THE STANDARD SPECIFICATIONS.

THE CONTRACTOR HAS THE OPTION TO OMIT THE LATERAL GUIDE IF APPROVED BY THE ENGINEER.

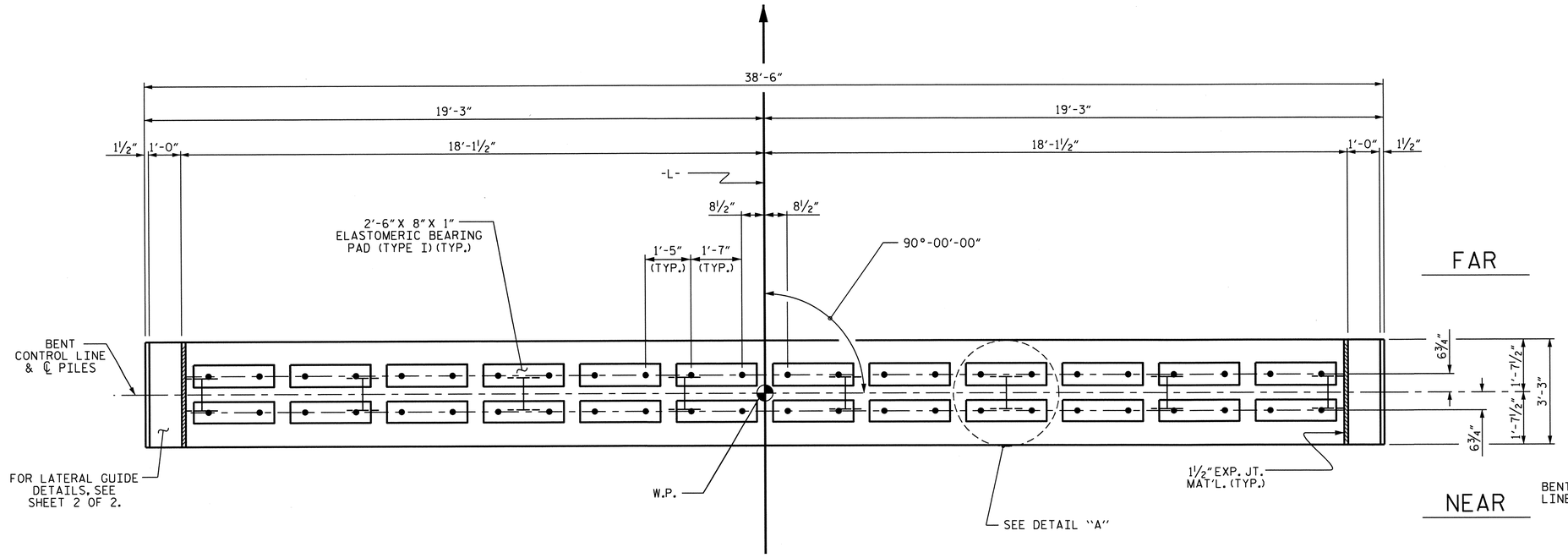

PLAN

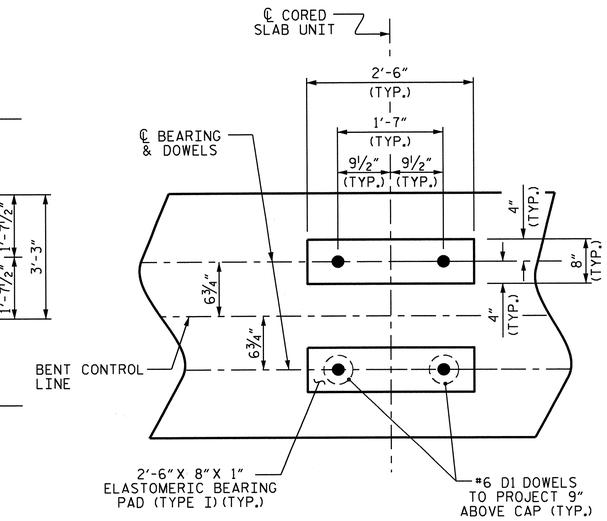

DETAIL "A"

(DIMENSIONS ARE TYPICAL EACH BEARING)

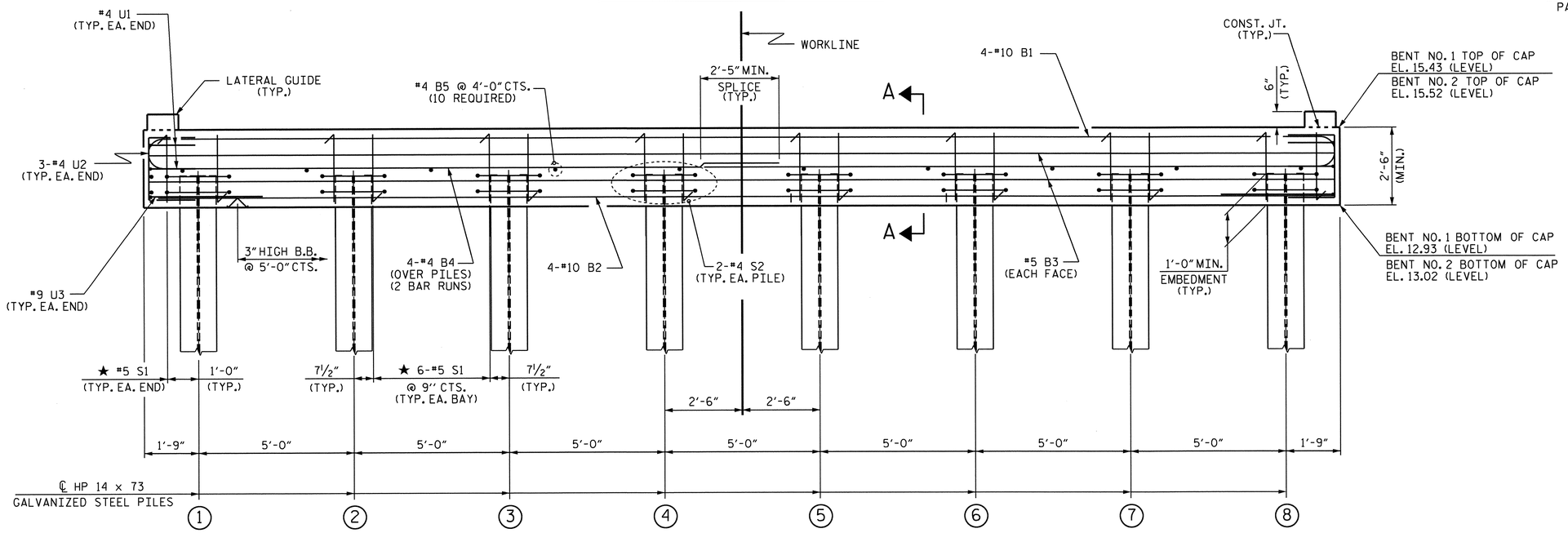

ELEVATION

FOR SECTION A-A, SEE SHEET 2 OF 2

PROJECT NO. B-4708

BEAUFORT COUNTY

STATION: 18+62.50 -L-

SHEET 1 OF 2

STATE OF NORTH CAROLINA
DEPARTMENT OF TRANSPORTATION
RALEIGH

SUBSTRUCTURE

BENTS No. 1 & No. 2

NORTH CAROLINA PROFESSIONAL SEAL 22005 ENGINEER KEITH PASCHAL

10-4-13

REVISIONS						SHEET NO.
NO.	BY:	DATE:	NO.	BY:	DATE:	S-14
1			3			TOTAL SHEETS
2			4			17

ASSEMBLED BY : M. D. PISO DATE : 08-30-13
CHECKED BY : PEGGY ADKINS DATE : 07-10-13

DRAWN BY : DGE 05/10
CHECKED BY : MKT 05/10

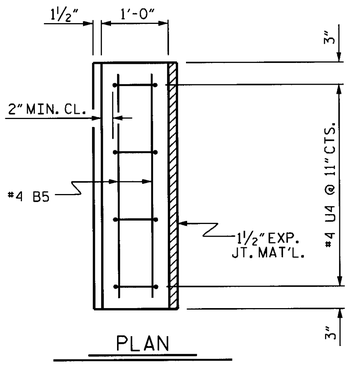

PLAN

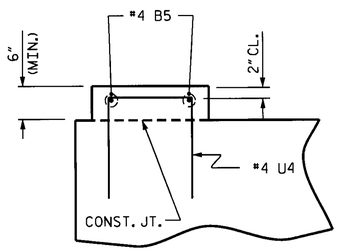

ELEVATION

LATERAL GUIDE DETAILS

(LEFT LATERAL GUIDE SHOWN, RIGHT SIDE SIMILAR)

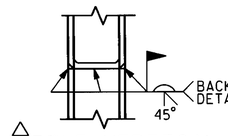

△ PILE VERTICAL

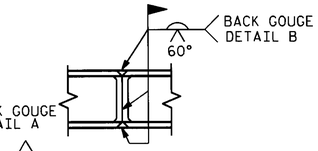

△ PILE HORIZONTAL OR VERTICAL

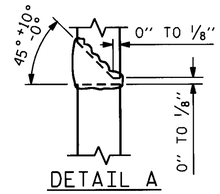

DETAIL A

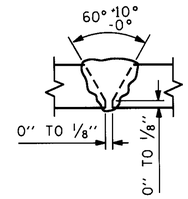

DETAIL B

△ POSITION OF PILE DURING WELDING.

PILE SPLICE DETAILS

BAR TYPES

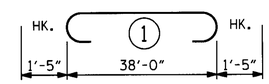

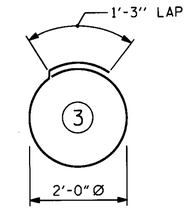

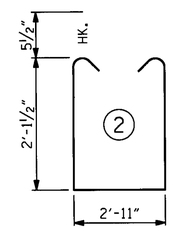

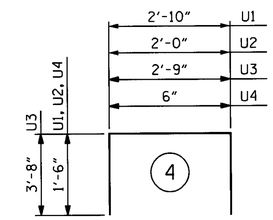

ALL BAR DIMENSIONS ARE OUT TO OUT.

BILL OF MATERIAL

FOR ONE BENT

BAR	NO.	SIZE	TYPE	LENGTH	WEIGHT
B1	4	#10	1	40'-10"	703
B2	4	#10	STR	38'-2"	657
B3	4	#5	STR	38'-2"	159
B4	8	#4	STR	20'-4"	109
B5	14	#4	STR	2'-11"	27
D1	48	#6	STR	1'-6"	108
S1	44	#5	2	8'-1"	371
S2	16	#4	3	7'-7"	81
U1	4	#4	4	5'-10"	16
U2	6	#4	4	5'-0"	20
U3	2	#9	4	10'-1"	69
U4	8	#4	4	3'-6"	19

REINFORCING STEEL (FOR ONE BENT) 2339 LBS

CLASS A CONCRETE BREAKDOWN (FOR ONE BENT)

POUR #1 (CAP)	11.6 C.Y.
POUR #2 (LATERAL GUIDES)	0.1 C.Y.
TOTAL CLASS A CONCRETE	11.7 C.Y.

HP 14 X 73 GALVANIZED STEEL PILES (FOR ONE BENT)

No. 8	560 LIN. FT.
PILE REDRIVES	4 EACH
STEEL PILE POINTS	8 EACH

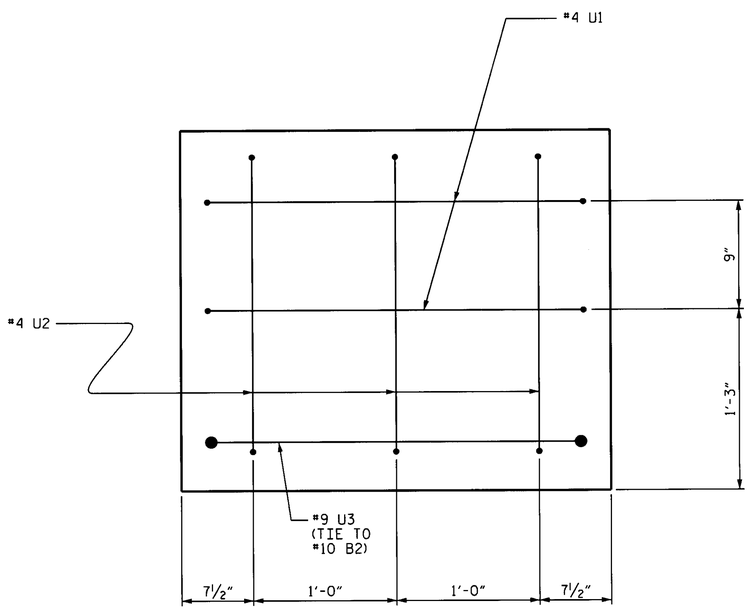

END OF CAP VIEW

(TYPICAL BOTH ENDS)

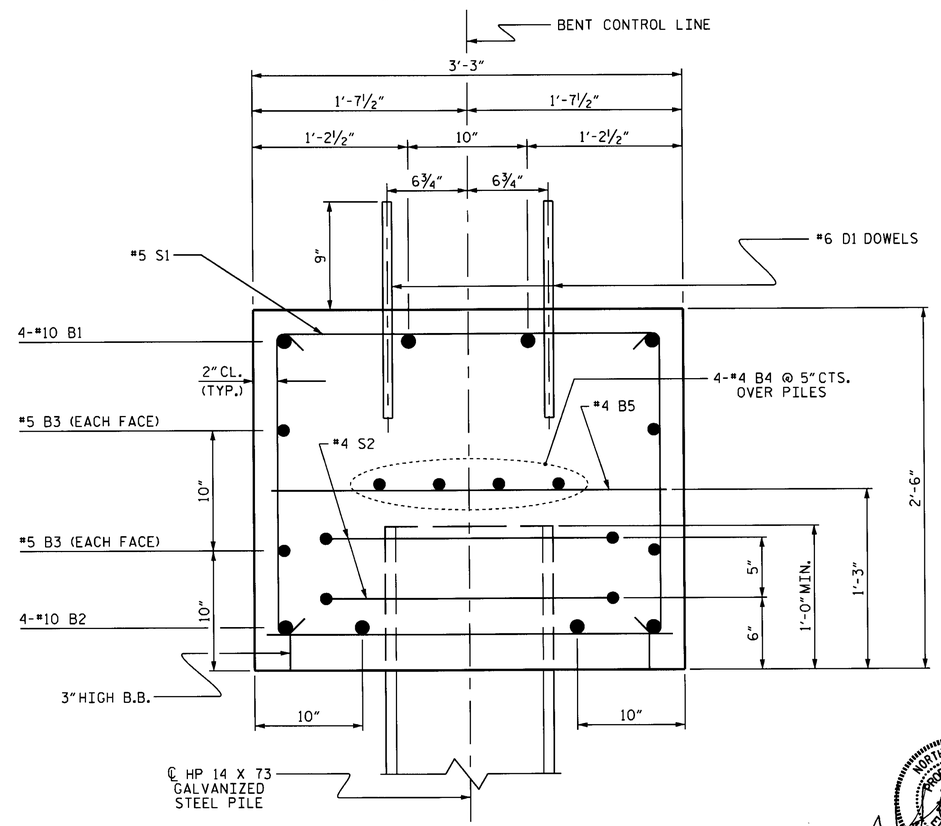

SECTION A-A

PROJECT NO. B-4708

BEAUFORT COUNTY

STATION: 18+62.50 -L-

SHEET 2 OF 2

STATE OF NORTH CAROLINA
DEPARTMENT OF TRANSPORTATION
RALEIGH

SUBSTRUCTURE

BENTS 1 & 2

NORTH CAROLINA PROFESSIONAL SEAL 42025 ENGINEER P. KEITH PASCHAL

9-26-13

REVISIONS							SHEET NO.
NO.	BY:	DATE:	NO.	BY:	DATE:		S-15
1			3				TOTAL SHEETS
2			4				17

DRAWN BY : M. D. PISO DATE : 08-29-13
CHECKED BY : PEGGY ADKINS DATE : 09-10-13

DRAWN BY : DGE 05/10
CHECKED BY : MKT 05/10

26-SEP-2013 09:09
S:\DPGI\Keith\B-4708\mdpiso\microstation\B-4708_SD_CS.dgn
kpaschal

STD. NO. 14" HP_BT_36_90S_<60'

NOTES:

FOR BERM WIDTH DIMENSIONS, SEE GENERAL DRAWING.

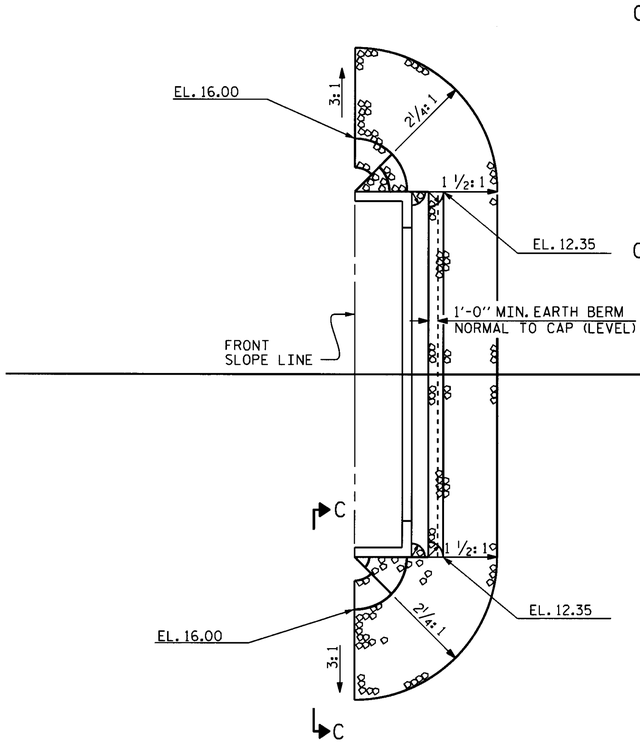

END BENT 1

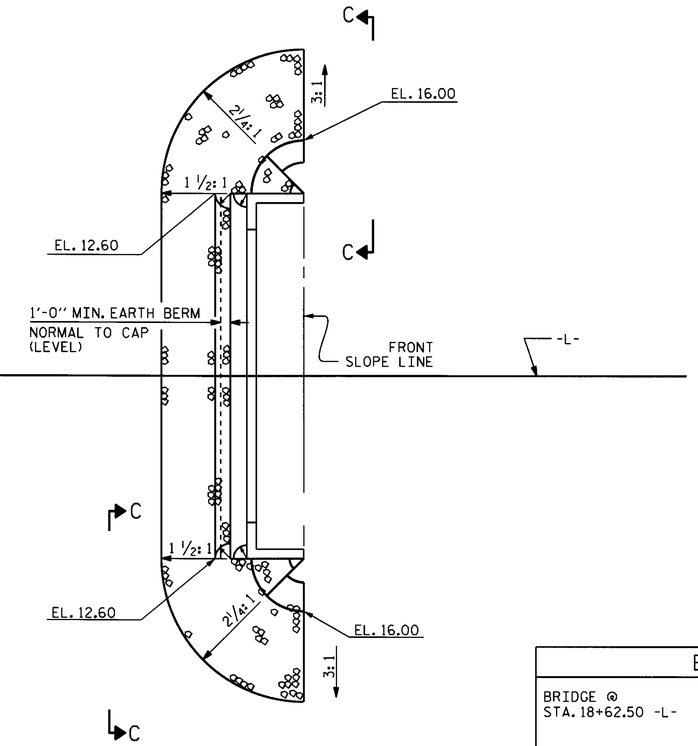

END BENT 2

ESTIMATED QUANTITIES		
BRIDGE @ STA. 18+62.50 -L-	RIP RAP CLASS II (2'-0" THICK)	GEOTEXTILE FOR DRAINAGE
	TONS	SQUARE YARDS
END BENT 1	52	58
END BENT 2	52	58

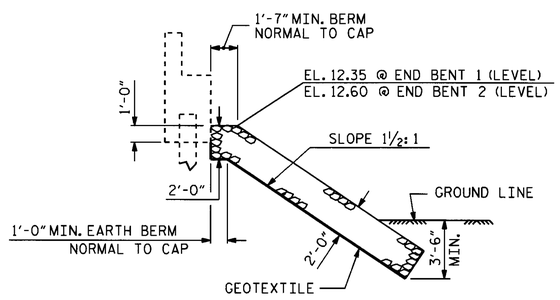

℄ SECTION

BERM RIP RAPPED

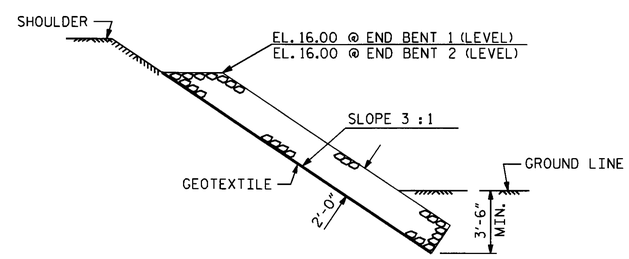

VIEW C-C

PROJECT NO. B-4708

BEAUFORT COUNTY

STATION: 18+62.50 -L-

STATE OF NORTH CAROLINA
DEPARTMENT OF TRANSPORTATION
RALEIGH

STANDARD

RIP RAP DETAILS

NORTH CAROLINA PROFESSIONAL SEAL 22005 ENGINEER KEITH PASCHAL

9.26.13

REVISIONS						SHEET NO.
NO.	BY:	DATE:	NO.	BY:	DATE:	S-16
1			3			TOTAL SHEETS
2			4			17

ASSEMBLED BY : M. D. PISO	DATE : 05-15-13	
CHECKED BY : PEGGY ADKINS	DATE : 07-10-13	
DRAWN BY : REK 1/84	REV. 5/1/06R	TLA/GM
CHECKED BY : RDU 1/84	REV. 10/1/11	MAA/GM
	REV. 12/21/11	MAA/GM

26-SEP-2013 09:12
S:\OPGI\Keith\B-4708\mdpiso\microstation\B-4708_SD_CS.dgn
kpaschal

STD. NO. RR1 (Sht 2)

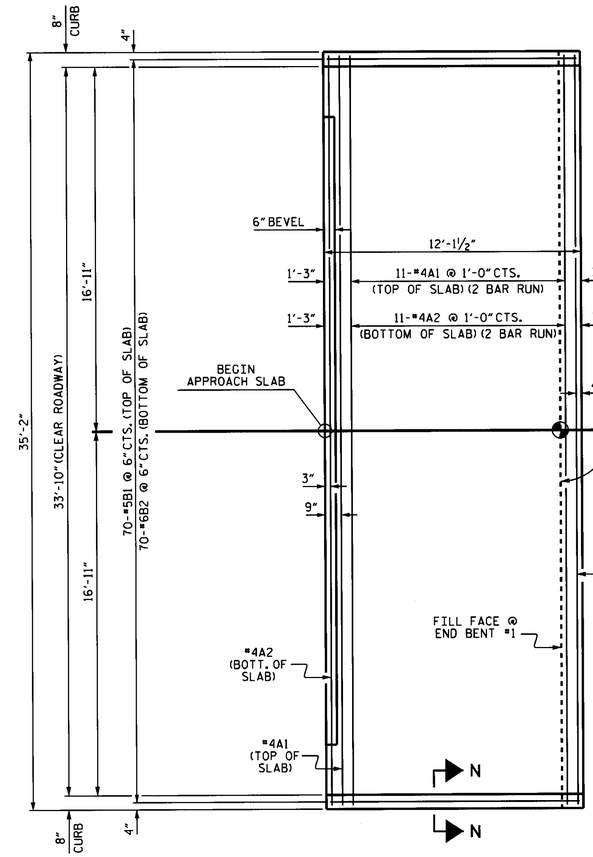

PLAN @ END BENT #1

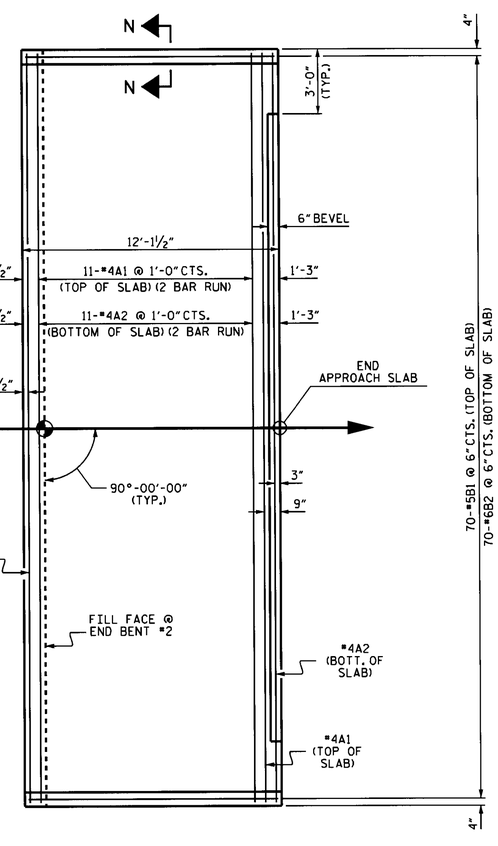

PLAN @ END BENT #2

DIMENSIONS SHOWN ARE TYPICAL FOR BOTH APPROACH SLABS

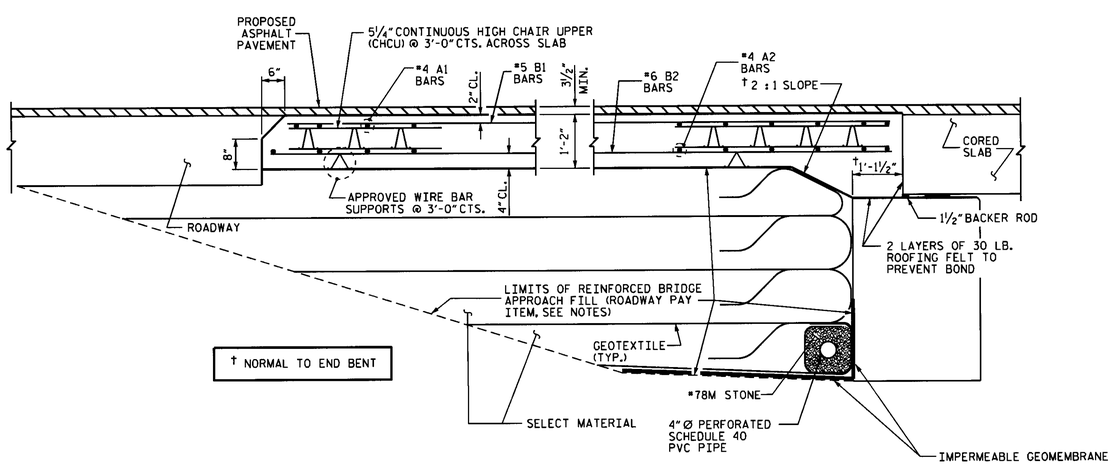

† NORMAL TO END BENT

SECTION THRU SLAB

NOTES

FOR REINFORCED BRIDGE APPROACH FILL INCLUDING GEOTEXTILE, IMPERMEABLE GEOMEMBRANE, 4" Ø DRAINAGE PIPE, #78M STONE, AND SELECT MATERIAL, SEE ROADWAY PLANS.

AREA BETWEEN THE WINGWALL AND APPROACH SLAB SHALL BE GRADED TO DRAIN THE WATER AWAY FROM THE FILL FACE OF THE BRIDGE AND SHALL BE PAVED. SEE ROADWAY PLANS.

APPROACH SLAB GROOVING IS NOT REQUIRED.

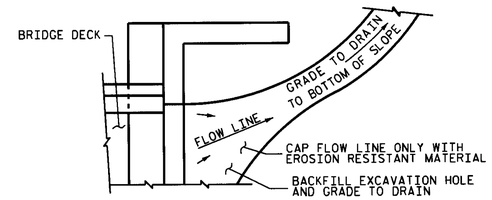

NOTE: IF THE APPROACH SLAB IS NOT CONSTRUCTED IMMEDIATELY AFTER THE BACKFILLING OF THE END BENT EXCAVATION, GRADE TO DRAIN TO THE BOTTOM OF THE SLOPE AND PROVIDE EROSION RESISTANT MATERIAL, SUCH AS FIBERGLASS ROVING OR AS DIRECTED BY THE ENGINEER TO PREVENT SOIL EROSION AND TO PROTECT THE AREA ADJACENT TO THE STRUCTURE. THE CONTRACTOR WILL BE REQUIRED TO REMOVE THESE MATERIALS PRIOR TO CONSTRUCTION OF THE APPROACH SLAB.

TEMPORARY DRAINAGE DETAIL

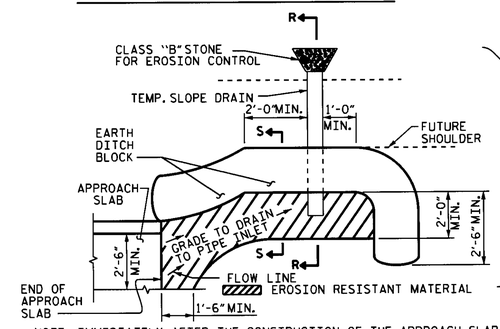

NOTE: IMMEDIATELY AFTER THE CONSTRUCTION OF THE APPROACH SLAB, THE CONTRACTOR SHALL PROVIDE TEMPORARY BERM AND SLOPE DRAIN. CONTRACTOR SHALL GRADE TO PIPE INLET AND PROVIDE EROSION RESISTANT MATERIAL AS SHOWN. THE EROSION RESISTANT MATERIAL SHALL BE EITHER 1) ASPHALT PLANT MIX, TYPE 1 OR TYPE 2, MIN. 2" DEPTH, 2) EROSION CONTROL MAT, OR 3) CONCRETE, AS DIRECTED BY THE ENGINEER. THE SLOPE DRAIN SHALL CONSIST OF A NON-PERFORATED TEMPORARY DRAINAGE PIPE, 12 INCHES IN DIAMETER.

PLAN VIEW

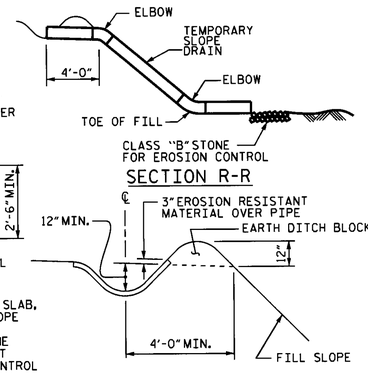

SECTION S-S

TEMPORARY BERM AND SLOPE DRAIN DETAILS

(TO BE USED WHEN SHOULDER BERM GUTTER IS REQUIRED)

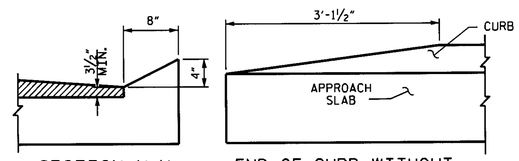

SECTION N-N

END OF CURB WITHOUT SHOULDER BERM GUTTER

CURB DETAILS

SPLICE LENGTHS		
BAR SIZE	EPOXY COATED	UNCOATED
#4	2'-0"	1'-9"
#5	2'-6"	2'-2"
#6	3'-10"	2'-7"

NORTH CAROLINA PROFESSIONAL SEAL 26905 ENGINEER KEITH PASCAL

9.26.13

BILL OF MATERIAL

APPROACH SLAB AT EB #1

BAR	NO.	SIZE	TYPE	LENGTH	WEIGHT
* A1	26	#4	STR	18'-6"	321
A2	26	#4	STR	18'-4"	318
* B1	70	#5	STR	11'-2"	815
B2	70	#6	STR	11'-8"	1227
REINFORCING STEEL				LBS.	1545
* EPOXY COATED REINFORCING STEEL				LBS.	1136
CLASS AA CONCRETE				C. Y.	20.3

APPROACH SLAB AT EB #2

BAR	NO.	SIZE	TYPE	LENGTH	WEIGHT
* A1	26	#4	STR	18'-6"	321
A2	26	#4	STR	18'-4"	318
* B1	70	#5	STR	11'-2"	815
B2	70	#6	STR	11'-8"	1227
REINFORCING STEEL				LBS.	1545
* EPOXY COATED REINFORCING STEEL				LBS.	1136
CLASS AA CONCRETE				C. Y.	20.3

PROJECT NO. B-4708

BEAUFORT COUNTY

STATION: 18+62.50 -L-

STATE OF NORTH CAROLINA
DEPARTMENT OF TRANSPORTATION
RALEIGH

STANDARD
BRIDGE APPROACH SLAB
FOR PRESTRESSED CONCRETE
CORED SLAB UNIT

90° SKEW

REVISIONS						SHEET NO.
NO.	BY:	DATE:	NO.	BY:	DATE:	S-17
1			3			TOTAL SHEETS
2			4			17

ASSEMBLED BY : M. D. PISO	DATE : 05-13-13
CHECKED BY : PEGGY ADKINS	DATE : 07-10-13
DRAWN BY : SHS/MAA 5-09	REV. 12-11 MAA/AAC
CHECKED BY : BCH 5-09	

26-SEP-2013 09:13
S:\DPG1\Keith\B-4708\mdpiso\microstation\B-4708_SD_CS.dgn
kpaschal

STD. NO. BAS_36_90S

STANDARD NOTES

DESIGN DATA:

SPECIFICATIONS	A.A.S.H.T.O. (CURRENT)
LIVE LOAD	SEE PLANS
IMPACT ALLOWANCE	SEE A.A.S.H.T.O.
STRESS IN EXTREME FIBER OF	
STRUCTURAL STEEL - AASHTO M270 GRADE 36	20,000 LBS. PER SQ. IN.
- AASHTO M270 GRADE 50W	27,000 LBS. PER SQ. IN.
- AASHTO M270 GRADE 50	27,000 LBS. PER SQ. IN.
REINFORCING STEEL IN TENSION	
GRADE 60	24,000 LBS. PER SQ. IN.
CONCRETE IN COMPRESSION	1,200 LBS. PER SQ. IN.
CONCRETE IN SHEAR	SEE A.A.S.H.T.O.
STRUCTURAL TIMBER - TREATED OR	
UNTREATED - EXTREME FIBER STRESS	1,800 LBS. PER SQ. IN.
COMPRESSION PERPENDICULAR TO GRAIN OF TIMBER	375 LBS. PER SQ. IN.
EQUIVALENT FLUID PRESSURE OF EARTH	30 LBS. PER CU. FT. (MINIMUM)

MATERIAL AND WORKMANSHIP:

EXCEPT AS MAY OTHERWISE BE SPECIFIED ON PLANS OR IN THE SPECIAL PROVISIONS, ALL MATERIAL AND WORKMANSHIP SHALL BE IN ACCORDANCE WITH THE 2012 "STANDARD SPECIFICATIONS FOR ROADS AND STRUCTURES" OF THE N. C. DEPARTMENT OF TRANSPORTATION.

STEEL SHEET PILING FOR PERMANENT OR TEMPORARY APPLICATIONS SHALL BE HOT ROLLED.

CONCRETE:

UNLESS OTHERWISE REQUIRED ON PLANS, CLASS A CONCRETE SHALL BE USED FOR ALL PORTIONS OF ALL STRUCTURES WITH THE EXCEPTION THAT: CLASS AA CONCRETE SHALL BE USED IN BRIDGE SUPERSTRUCTURES, ABUTMENT BACKWALLS, AND APPROACH SLABS; AND CLASS B CONCRETE SHALL BE USED FOR SLOPE PROTECTION AND RIP RAP.

CONCRETE CHAMFERS:

UNLESS OTHERWISE NOTED ON THE PLANS, ALL EXPOSED CORNERS ON STRUCTURES SHALL BE CHAMFERED 3/4" WITH THE FOLLOWING EXCEPTIONS: TOP CORNERS OF CURBS MAY BE ROUNDED TO 1-1/2" RADIUS WHICH IS BUILT INTO CURB FORMS; CORNERS OF TRANSVERSE FLOOR EXPANSION JOINTS SHALL BE ROUNDED WITH A 1/4" FINISHING TOOL UNLESS OTHERWISE REQUIRED ON PLANS; AND CORNERS OF EXPANSION JOINTS IN THE ROADWAY FACES AND TOPS OF CURBS AND SIDEWALKS SHALL BE ROUNDED TO A 1/4" RADIUS WITH A FINISHING STONE OR TOOL UNLESS OTHERWISE REQUIRED ON PLANS.

DOWELS:

DOWELS WHEN INDICATED ON PLANS AS FOR CULVERT EXTENSIONS, SHALL BE EMBEDDED AT LEAST 12" INTO THE OLD CONCRETE AND GROUTED INTO PLACE WITH 1:2 CEMENT MORTAR.

ALLOWANCE FOR DEAD LOAD DEFLECTION, SETTLEMENT, ETC. IN CASTING SUPERSTRUCTURES:

BRIDGES SHALL BE BUILT ON THE GRADE OR VERTICAL CURVE SHOWN ON PLANS. SLABS, CURBS AND PARAPETS SHALL CONFORM TO THE GRADE OR CURVE.

ALL DIMENSIONS WHICH ARE GIVEN IN SECTION AND ARE AFFECTED BY DEAD LOAD DEFLECTIONS ARE DIMENSIONS AT CENTER LINE OF BEARING UNLESS OTHERWISE NOTED ON PLANS. IN SETTING FORMS FOR STEEL BEAM BRIDGES AND PRESTRESSED CONCRETE GIRDER BRIDGES, ADJUSTMENTS SHALL BE MADE DUE TO THE DEAD LOAD DEFLECTIONS FOR THE ELEVATIONS SHOWN. WHERE BLOCKS ARE SHOWN OVER BEAMS FOR BUILDING UP TO THE SLAB, THE VERTICAL DIMENSIONS OF THE BLOCKS SHALL BE ADJUSTED BETWEEN BEARINGS TO COMPENSATE FOR DEAD LOAD DEFLECTIONS, VERTICAL CURVE ORDINATE, AND ACTUAL BEAM CAMBER. WHERE BOTTOM OF SLAB IS IN LINE WITH BOTTOM OF TOP FLANGES, DEPTH OF SLAB BETWEEN BEARINGS SHALL BE ADJUSTED TO COMPENSATE FOR DEAD LOAD DEFLECTION, VERTICAL CURVE ORDINATE, AND ACTUAL BEAM CAMBER.

IN SETTING FALSEWORK AND FORMS FOR REINFORCED CONCRETE SPANS, AN ALLOWANCE SHALL BE MADE FOR DEAD LOAD DEFLECTIONS, SETTLEMENT OF FALSEWORK, AND PERMANENT CAMBER WHICH SHALL BE PROVIDED FOR IN ADDITION TO THE ELEVATIONS SHOWN. AFTER REMOVAL OF THE FALSEWORK, THE FINISHED STRUCTURES SHALL CONFORM TO THE PROFILE AND ELEVATIONS SHOWN ON THE PLANS AND CONSTRUCTION ELEVATIONS FURNISHED BY THE ENGINEER.

DETAILED DRAWINGS FOR FALSEWORK OR FORMS FOR BRIDGE SUPERSTRUCTURE AND ANY STRUCTURE OR PARTS OF A STRUCTURE AS NOTED ON THE PLANS SHALL BE SUBMITTED TO THE ENGINEER FOR APPROVAL BEFORE CONSTRUCTION OF THE FALSEWORK OR FORMS IS STARTED.

REINFORCING STEEL:

ALL REINFORCING STEEL SHALL BE DEFORMED. DIMENSIONS RELATIVE TO PLACEMENT OF REINFORCING ARE TO CENTERS OF BARS UNLESS OTHERWISE INDICATED IN THE PLANS. DIMENSIONS ON BAR DETAILS ARE TO CENTERS OF BARS OR ARE OUT TO OUT AS INDICATED ON PLANS.

WIRE BAR SUPPORTS SHALL BE PROVIDED FOR REINFORCING STEEL WHERE INDICATED ON THE PLANS. WHEN BAR SUPPORT PIECES ARE PLACED IN CONTINUOUS LINES, THEY SHALL BE SO PLACED THAT THE ENDS OF THE SUPPORTING WIRES SHALL BE LAPPED TO LOCK LEGS ON ADJOINING PIECES.

STRUCTURAL STEEL:

AT THE CONTRACTOR'S OPTION, HE MAY SUBSTITUTE 7/8" Ø SHEAR STUDS FOR THE 3/4" Ø STUDS SPECIFIED ON THE PLANS. THIS SUBSTITUTION SHALL BE MADE AT THE RATE OF 3 - 7/8" Ø STUDS FOR 4 - 3/4" Ø STUDS, AND STUD SPACING CHANGES SHALL BE MADE AS NECESSARY TO PROVIDE THE SAME EQUIVALENT NUMBER OF 7/8" Ø STUDS ALONG THE BEAM AS SHOWN FOR 3/4" Ø STUDS BASED ON THE RATIO OF 3 - 7/8" Ø STUDS FOR 4 - 3/4" Ø STUDS. STUDS OF THE LENGTH SPECIFIED ON THE PLANS MUST BE PROVIDED. THE MAXIMUM SPACING SHALL BE 2'-0".

EXCEPT AT THE INTERIOR SUPPORTS OF CONTINUOUS BEAMS WHERE THE COVER PLATE IS IN CONTACT WITH BEARING PLATE, THE CONTRACTOR MAY, AT HIS OPTION, SUBSTITUTE FOR THE COVER PLATES DESIGNATED ON THE PLANS COVER PLATES OF THE EQUIVALENT AREA PROVIDED THESE PLATES ARE AT LEAST 5/16" IN THICKNESS AND DO NOT EXCEED A WIDTH EQUAL TO THE FLANGE WIDTH LESS 2" OR A THICKNESS EQUAL TO 2 TIMES THE FLANGE THICKNESS. THE SIZE OF FILLET WELDS SHALL CONFORM TO THE REQUIREMENTS OF THE CURRENT ANSI/AASHTO/AWS "BRIDGE WELDING CODE". ELECTROSLAG WELDING WILL NOT BE PERMITTED.

WITH THE SOLE EXCEPTION OF EDGES AT SURFACES WHICH BEAR ON OTHER SURFACES, ALL SHARP EDGES AND ENDS OF SHAPES AND PLATES SHALL BE SLIGHTLY ROUNDED BY SUITABLE MEANS TO A RADIUS OF APPROXIMATELY 1/16 INCH OR EQUIVALENT FLAT SURFACE AT A SUITABLE ANGLE PRIOR TO PAINTING, GALVANIZING, OR METALLIZING.

HANDRAILS AND POSTS:

METAL STANDARDS AND FACES OF THE CONCRETE END POSTS FOR THE METAL RAIL SHALL BE SET NORMAL TO THE GRADE OF THE CURB, UNLESS OTHERWISE SHOWN ON PLANS. THE METAL RAIL AND TOPS OF CONCRETE POSTS USED WITH THE ALUMINUM RAIL SHALL BE BUILT PARALLEL TO THE GRADE OF THE CURB.

METAL HANDRAILS SHALL BE IN ACCORDANCE WITH THE PLANS. RAILS SHALL BE AS MANUFACTURED FOR BRIDGE RAILING. CASTINGS SHALL BE OF A UNIFORM APPEARANCE. FINS AND OTHER DEFORMATIONS RESULTING FROM CASTING OR OTHERWISE SHALL BE REMOVED IN A MANNER SO THAT A UNIFORM COLORING OF THE COMPLETED CASTING SHALL BE OBTAINED. CASTINGS WITH DISCOLORATIONS OR OF NON-UNIFORM COLORING WILL NOT BE ACCEPTED. CERTIFIED MILL REPORTS ARE REQUIRED FOR METAL RAILS AND POSTS.

SPECIAL NOTES:

GENERALLY, IN CASE OF DISCREPANCY, THIS STANDARD SHEET OF NOTES SHALL GOVERN OVER THE SPECIFICATIONS, BUT THE REMAINDER OF THE PLANS SHALL GOVERN OVER NOTES HEREON, AND SPECIAL PROVISIONS SHALL GOVERN OVER ALL. SEE SPECIFICATIONS ARTICLE 105-4.

ENGLISH

JANUARY, 1990

TIP PROJECT: B-4708

CONTRACT:

STATE OF NORTH CAROLINA
DIVISION OF HIGHWAYS

BEAUFORT COUNTY

LOCATION: BRIDGE NO. 005 OVER AGGIE RUN ON SR 1001 (CHERRY RUN RD.)

TYPE OF WORK: UTILITIES CONSTRUCTION

STATE	STATE PROJECT REFERENCE NO.	SHEET NO.	TOTAL SHEETS
N.C.	B-4708	UC-01	6

UTILITY DESIGN ENGINEER

NORTH CAROLINA PROFESSIONAL SEAL 025361 ENGINEER KEVIN C. ZICES

2013-NOV-05

HNTB NORTH CAROLINA, P.C.
343 E. Six Forks Road, Suite 200
Raleigh, North Carolina 27609
NC License No: C-1554

DATE: NOVEMBER 5, 2013

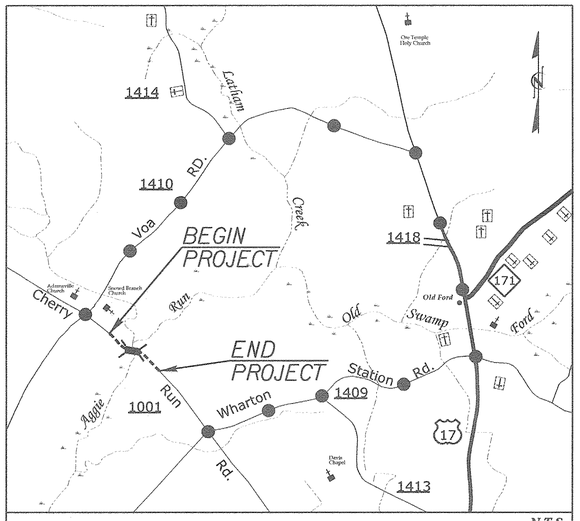

VICINITY MAP — DETOUR ROUTE — N.T.S.

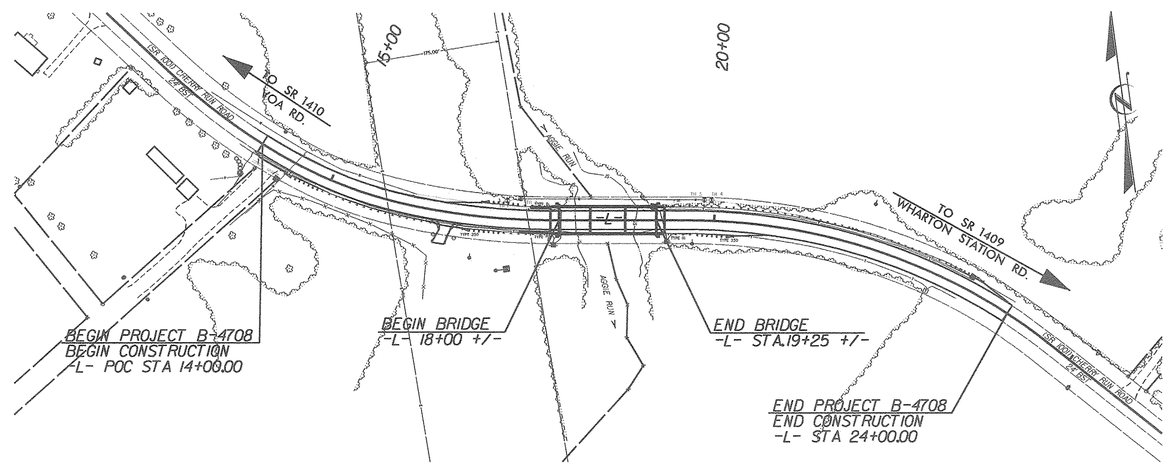

GRAPHIC SCALES

50 25 0 50 100
PLANS

50 25 0 50 100
PROFILE (HORIZONTAL)

10 5 0 10 20
PROFILE (VERTICAL)

PROJECT LENGTH

LENGTH ROADWAY OF TIP PROJECT B-4708 =	0.16 MI.
LENGTH OF STRUCTURE TIP PROJECT B-4708 =	0.02 MI.
TOTAL LENGTH OF TIP PROJECT B-4708 =	0.18 MI.

INDEX OF SHEETS

SHEET NO.	DESCRIPTION
UC-01	TITLE SHEET
UC-02	SYMBOLOGY SHEET
UC-03	GENERAL NOTES SHEET
UC-03A TO UC-03B	DETAIL SHEETS
UC-04	PLAN SHEETS

UTILITY OWNERS ON PROJECT

WATER - BEAUFORT COUNTY

UTILITY DESIGN BY:

MA Engineering CONSULTANTS, INC.
598 East Chatham Street, Suite 137 Cary, NC 27511
Phone: 919.297.0220 Fax. 919.297.0221

NCDOT PROJECT ENGINEER:
MARIA ROGERSON, P.E.

PREPARED FOR:
NORTH CAROLINA
DEPARTMENT OF TRANSPORTATION
DIVISION BRIDGE PROGRAM

11/5/2013
P:\JOBS\0696\04\3300\Utilities\Rdy_ut\Proj\B4708_ut_UC-01_tsh.dgn
11:13 PM

PROJECT REFERENCE NO.	SHEET NO.
B-4708	UC-02

STATE OF NORTH CAROLINA
DIVISION OF HIGHWAYS

UTILITIES PLAN SHEET SYMBOLS

2013-NOV-05

PROPOSED WATER SYMBOLS

- Water Line (Sized as Shown) — 12" WL
- 11¼ Degree Bend
- 22½ Degree Bend
- 45 Degree Bend
- 90 Degree Bend
- Plug
- Tee
- Cross
- Reducer
- Gate Valve — GV
- Butterfly Valve — BV
- Tapping Valve — TGV
- Line Stop — LS
- Line Stop with Bypass — LS/BP
- Blow Off — BO
- Fire Hydrant — PFH
- Relocate Fire Hydrant — RFH
- Remove Fire Hydrant — REM FH
- Water Meter — PWM
- Relocate Water Meter — RWM
- Remove Water Meter — REM WM
- Water Pump Station — PS(W)
- RPZ Backflow Preventer — PRPZ
- DCV Backflow Preventer — PBFP
- Relocate RPZ Backflow Preventer — RRPZ
- Relocate DCV Backflow Preventer — RBFP

PROPOSED SEWER SYMBOLS

- Gravity Sewer Line (Sized as Shown) — 12" SS
- Force Main Sewer Line (Sized as Shown) — 12" FSS
- Manhole (Sized per Note)
- Sewer Pump Station — PS(SS)

PROPOSED MISCELLANOUS UTILITIES SYMBOLS

- Power Pole
- Telephone Pole
- Joint Use Pole
- Telephone Pedestal — TEL PED
- Utility Line by Others (Type as Shown) — PROP O/H POW LINE
- Trenchless Installation — 12" TL INSTALL
- Encasement by Open Cut — 24" ENCAS BY OC
- Encasement — 24" ENCASEMENT
- Thrust Block
- Air Release Valve — AR
- Utility Vault — UV
- Concrete Pier — CP
- Steel Pier — SP
- Plan Note — NOTE
- Pay Item Note — PAY ITEM

EXISTING UTILITIES SYMBOLS

- Power Pole
- Telephone Pole
- Joint Use Pole
- Utility Pole
- Utility Pole with Base
- H-Frame Pole
- Power Transmission Line Tower
- Water Manhole
- Power Manhole
- Telephone Manhole
- Sanitary Sewer Manhole
- Hand Hole for Cable
- Power Transformer
- Telephone Pedestal
- CATV Pedestal
- Gas Valve
- Gas Meter
- Located Miscellaneous Utility Object
- Abandoned According to Utility Records — AATUR
- End of Information — E.O.I.
- *Underground Power Line — P
- *Underground Telephone Cable — T
- *Underground Telephone Conduit — TC
- *Underground Fiber Optics Telephone Cable — T FO
- *Underground TV Cable — TV
- *Underground Fiber Optics TV Cable — TV FO
- *Underground Gas Pipeline — G
- Aboveground Gas Pipeline — A/G Gas
- *Underground Water Line — W
- Aboveground Water Line — A/G Water
- *Underground Gravity Sanitary Sewer Line — SS
- Aboveground Gravity Sanitary Sewer Line — A/G Sanitary Sewer
- *Underground SS Forced Main Line — FSS
- Underground Unknown Utility Line — ?UTL
- SUE Test Hole
- Water Meter
- Water Valve
- Fire Hydrant
- Sanitary Sewer Cleanout

*For Existing Utilities

- Utility Line Drawn from Record (Type as Shown) — W
- Designated Utility Line (Type as Shown) — W

REV: 2/1/2012

5/14/99
98\214\13980\11/5/2013 12:33:31 PM
C:\Pw_Work\Projects\Rdy_Ut\P-0_\B4708_ut_UC-22_sym.dgn

PROJECT REFERENCE NO.	SHEET NO.
B-4708	UC-3

UTILITY DESIGN ENGINEER

NORTH CAROLINA PROFESSIONAL SEAL ENGINEER KEVIN C. ZUPP

2014-FEB-03

MA Engineering CONSULTANTS, INC. 598 E. Chatham Street, Suite 137 Cary, N.C. 27511

HNTB HNTB NORTH CAROLINA, P.C. 343 E. Six Forks Road, Suite 200 Raleigh, North Carolina 27609 NC License No: C-1554

DATE: FEBRUARY 3, 2014

UTILITY CONSTRUCTION

GENERAL NOTES:

1. THE PROPOSED UTILITY CONSTRUCTION SHALL MEET THE APPLICABLE REQUIREMENTS OF THE NC DEPARTMENT OF TRANSPORTATION'S "STANDARD SPECIFICATIONS FOR ROADS AND STRUCTURES" DATED JANUARY 2012.

2. THE EXISTING UTILITIES BELONG TO BEAUFORT COUNTY.

   CONTACT: ERICK JENNINGS
   PHONE: 252-975-0720

3. ALL WATER LINES TO BE INSTALLED WITHIN COMPLIANCE OF THE RULES AND REGULATIONS OF THE NORTH CAROLINA DEPARTMENT OF ENVIRONMENTAL AND NATURAL RESOURCES, DIVISION OF ENVIRONMENTAL HEALTH. ALL SEWER LINES TO BE INSTALLED WITHIN COMPLIANCE OF THE RULES AND REGULATIONS OF THE NORTH CAROLINA DEPARTMENT OF ENVIRONMENT AND NATURAL RESOURCES, DIVISION OF WATER QUALITY. PERFORM ALL WORK IN ACCORDANCE WITH THE APPLICABLE PLUMBING CODES.

4. THE UTILITY OWNER OWNS THE EXISTING UTILITY FACILITIES AND WILL OWN THE NEW UTILITY FACILITIES AFTER ACCEPTANCE BY THE DEPARTMENT. THE DEPARTMENT OWNS THE CONSTRUCTION CONTRACT AND HAS ADMINISTRATIVE AUTHORITY. COMMUNICATIONS AND DECISIONS BETWEEN THE CONTRACTOR AND UTILITY OWNER ARE NOT BINDING UPON THE DEPARTMENT OR THIS CONTRACT UNLESS AUTHORIZED BY THE ENGINEER. AGREEMENTS BETWEEN THE UTILITY OWNER AND CONTRACTOR FOR THE WORK THAT IS NOT PART OF THIS CONTRACT OR IS SECONDARY TO THIS CONTRACT ARE ALLOWED, BUT ARE NOT BINDING UPON THE DEPARTMENT.

5. PROVIDE ACCESS FOR THE DEPARTMENT PERSONNEL AND THE OWNER'S REPRESENTATIVES TO ALL PHASES OF CONSTRUCTION. NOTIFY DEPARTMENT PERSONNEL AND THE UTILITY OWNER TWO WEEKS PRIOR TO COMMENCEMENT OF ANY WORK AND ONE WEEK PRIOR TO SERVICE INTERRUPTION. KEEP UTILITY OWNERS' REPRESENTATIVES INFORMED OF WORK PROGRESS AND PROVIDE OPPROTUNITY FOR INSPECTION OF CONSTRUCTION AND TESTING.

6. THE PLANS DEPICT THE BEST AVAILABLE INFORMATION FOR THE LOCATION, SIZE, AND TYPE OF MATERIAL FOR ALL EXISTING UTILITIES. MAKE INVESTIGATIONS FOR DETERMINING THE EXACT LOCATION, SIZE, AND TYPE MATERIAL OF THE EXISTING FACILITIES AS NECESSARY FOR THE CONSTRUCTION OF THE PROPOSED UTILITIES AND FOR AVOIDING DAMAGE TO EXISTING FACILITIES. REPAIR ANY DAMAGE INCURRED TO EXISTING FACILITIES TO THE ORIGINAL OR BETTER CONDITION AT NO ADDITONAL COST TO THE DEPARTMENT.

7. MAKE FINAL CONNECTIONS OF THE NEW WORK TO THE EXISTING SYSTEM WHERE INDICATED ON THE PLANS, AS REQUIRED TO FIT THE ACTUAL CONDITIONS, OR AS DIRECTED.

8. MAKE CONNECTIONS BETWEEN EXISTING AND PROPOSED UTILITIES AT TIMES MOST CONVENIENT TO THE PUBLIC, WITHOUT ENDANGERING THE UTILITY SERVICE, AND IN ACCORDANCE WITH THE UTILITY OWNER'S REQUIREMENTS. MAKE CONNECTIONS ON WEEKENDS, AT NIGHT, AND ON HOLIDAYS IF NECESSARY.

9. ALL UTILITY MATERIALS SHALL BE APPROVED PRIOR TO DELIVERY TO THE PROJECT. SEE 1500-7, " SUBMITTALS AND RECORDS" IN SECTION 1500 OF THE STANDARD SPECIFICATIONS.

10. CONTRACTOR SHALL NOT OPERATE ANY VALVES ON THE EXISTING UTILITY SYSTEMS. CONTRACTOR SHALL CONTACT THE UTILITY OWNER TO CONDUCT STRATEGIC OPERATION OF VALVES FOR SERVICE INTERRUPTION IN ORDER TO PERFORM SPECIFIC WORK.

PROJECT SPECIFIC NOTES:

1. PROPOSED 8" WATER LINE SHALL BE DUCTILE IRON RESTRAINED JOINT (D.I.R.J.) PIPE.

2. ALL PROPOSED FITTINGS (BENDS, TEES, CROSSES, REDUCERS, PLUGS, ETC.) SHALL BE ADEQUATELY RESTRAINED BY THE USE OF RESTRAINED JOINT CONSTRUCTION AND/OR CAST IN PLACE CONCRETE THRUST RESTRAINS AS DETAILED ON THESE DRAWINGS, OR AS DIRECTED BY THE RESIDENT ENGINEER.

3. THE EXISTING 8" PVC LINE SHALL BE RESTRAINED ON THE PORTION TO REMAIN AFTER VALVE INSTALLATION. THE CONTRACTOR SHALL EXCAVATE THE EXISTING PVC LINE AND INSTALL THE BELL RESTRAINT CLAMPS AT EVERY BELL JOINT FOR THE DISTANCE NOTED IN THE DETAILS ON SHEET UC-3B.

4. EXISTING HDPE PIPE SHALL BE EXCAVATED AND FIELD BENT AS NEEDED TO PROVIDE FOR HORIZONTAL TRANSITION AND TIE-IN TO PROPOSED DUCTILE IRON PIPE. SEE TIE-IN DETAIL ON SHEET UC-3B.

PROJECT QUANTITIES

	Job Name: B-4708	Date:	2/3/2014
Item Number	Description	Quantity	
5325800000-E	8" WATER LINE	407	LF
5546000000-E	8" VALVE	1	EA
5801000000-E	ABANDON 8" UTILITY PIPE	446	LF
SP. PAYITEM	10" TRANSITION COUPLING (HDPE TO DI)	2	EA

2/3/2014 8:09:25 AM
C:\SS\SS 0096\014\13300\Utilities\Rdy_Ut\Proj\B4708_ut_UC-03_notes.dgn

PROJECT REFERENCE NO.	SHEET NO.
B-4708	UC-3A

UTILITY DESIGN ENGINEER

NORTH CAROLINA PROFESSIONAL ENGINEER SEAL 19761 KEVIN C. ZIDES

2013-NOV-05

MA Engineering CONSULTANTS, INC. 598 E. Chatham Street, Suite 137 Cary, N. C. 27511

HNTB HNTB NORTH CAROLINA, P.C. 343 E. Six Forks Road, Suite 200 Raleigh, North Carolina 27609 NC License No: C-1504

DATE: NOVEMBER 5, 2013

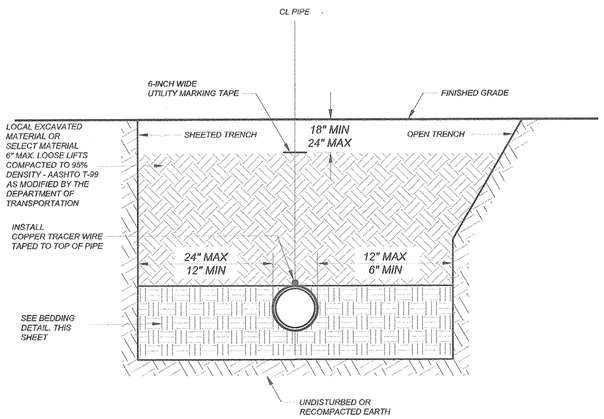

NOTES:
1. ALL SHORING & TRENCHING SHALL COMPLY WITH OSHA SAFETY STANDARDS FOR THE CONSTRUCTION INDUSTRY.
2. BELL HOLES NOT SHOWN.
3. ALL BACKFILL MATERIAL SHALL BE FREE OF ROCKS, FOREIGN MATERIAL, AND FROZEN EARTH.

GENERAL TRENCH DETAIL
NTS

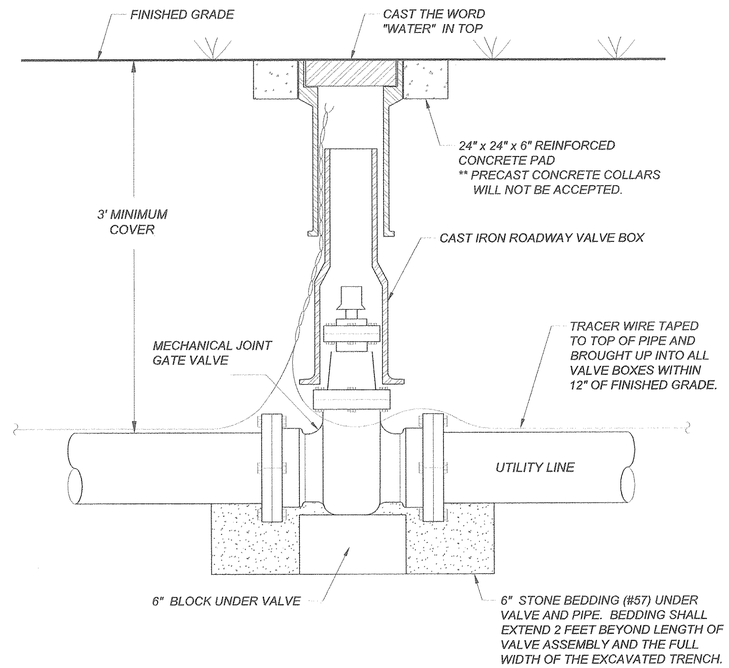

GATE VALVE DETAIL
NTS

PIPE BEDDING DETAIL

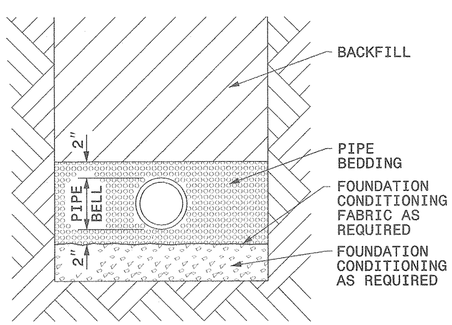

PLACE FOUNDATION CONDITIONING MATERIAL BELOW BEDDING IF REQUIRED, AS DIRECTED BY ENGINEER. PIPE BEDDED IN SELECT MATERIAL, CLASS II (TYPE 1) OR CLASS III. TRENCH BACKFILLED IN LOOSE 6" LAYERS COMPACTED TO TOP OF TRENCH USING LOCAL EXCAVATED MATERIAL IF APPROVED BY THE ENGINEER, OR SELECT MATERIAL. ALL MATERIAL SHALL BE FREE OF ROCKS, FOREIGN MATERIAL, AND FROZEN EARTH. COMPACTION SHALL BE TO APPROXIMATELY 95% DENSITY IN ACCORDANCE WITH AASHTO T-99 AS MODIFIED BY THE DEPARTMENT OF TRANSPORTATION.

MAXIMUM TRENCH WIDTH
AT TOP OF PIPE

NOMINAL PIPE SIZE (INCHES)	TRENCH WIDTH (INCHES)	NOMINAL PIPE SIZE (INCHES)	TRENCH WIDTH (INCHES)
4	28	20	44
6	30	24	48
8	32	30	54
10	34	36	60
12	36	42	66
14	38	48	72
16	40	54	78
18	42		

5/28/99
11/5/2013 R:\U3303\2696\014\13302\Utilities\Proj_Utl\Proj\B4708_rw_UC-03A_details.dgn

PROJECT REFERENCE NO.	SHEET NO.
B-4708	UC-3B

UTILITY DESIGN ENGINEER

NORTH CAROLINA PROFESSIONAL SEAL ENGINEER KEVIN C. ZOBB

2014-FEB-03

MA Engineering CONSULTANTS, INC. 598 E. Chatham Street, Suite 137 Cary, N. C. 27511

HNTB HNTB NORTH CAROLINA, P.C. 343 E. Six Forks Road, Suite 200 Raleigh, North Carolina 27609 NC License No: C-1554

DATE: JANUARY 28, 2014

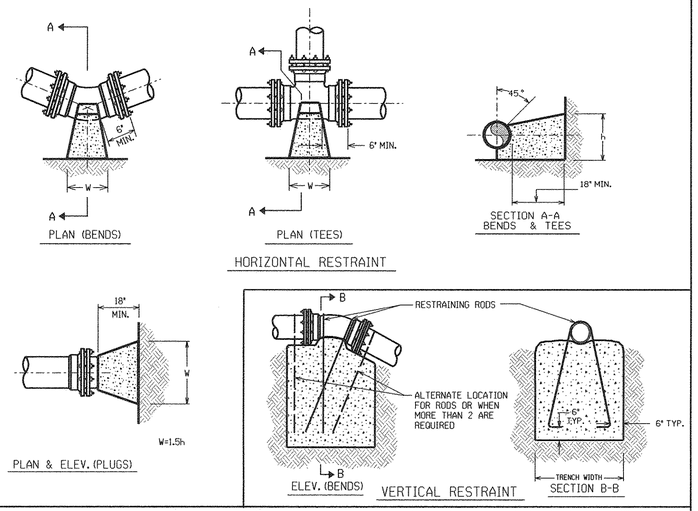

THRUST RESTRAINT FOR PIPE LINES

PVC PIPE RESTRAINED JOINT DESIGN TABLE

FITTING	REQUIRED RESTRAINED LENGTH (FT) OF PVC PIPE BY DEPTH OF COVER							
HORIZONTAL BENDS	**3 FT**	**4 FT**	**5 FT**	**6 FT**	**7 FT**	**8 FT**	**9 FT**	**10 FT**
8 INCH DIA - 11.25 DEG	3	3	3	2	2	2	2	2
8 INCH DIA - 22.5 DEG	6	5	5	4	4	4	3	3
8 INCH DIA - 45 DEG	12	11	9	8	7	7	6	6
8 INCH DIA - 90 DEG	29	25	22	19	17	16	14	13
VERTICAL DOWN BENDS	**3 FT**	**4 FT**	**5 FT**	**6 FT**	**7 FT**	**8 FT**	**9 FT**	**10 FT**
8 INCH DIA - 11.25 DEG	11	9	8	7	6	5	5	5
8 INCH DIA - 22.5 DEG	22	18	15	13	12	11	10	9
8 INCH DIA - 45 DEG	45	37	31	27	24	21	19	18
VERTICAL UP BENDS	**3 FT**	**4 FT**	**5 FT**	**6 FT**	**7 FT**	**8 FT**	**9 FT**	**10 FT**
8 INCH DIA - 11.25 DEG	3	3	3	2	2	2	2	2
8 INCH DIA - 22.5 DEG	6	5	5	4	4	4	3	3
8 INCH DIA - 45 DEG	12	11	9	8	7	7	6	6
DEAD ENDS / VALVES	**3 FT**	**4 FT**	**5 FT**	**6 FT**	**7 FT**	**8 FT**	**9 FT**	**10 FT**
8 INCH DIA	83	71	62	55	49	45	41	38

ASSUMPTIONS

LAYING CONDITION = TYPE 4
SOIL DESIGNATION = GC = COHESIVE-GRANULAR
DESIGN PRESSURE = 200 PSI (TEST PRESSURE)
SAFETY FACTOR = 1.5

NOTES

1. RL = RUN LENGTH BETWEEN FIRST JOINTS OF PIPE ALONG THE RUN LINE OF TEE.
2. RESTRAINED LENGTH IS MEASURED AS FOLLOWS:
   A. HORIZONTAL/VERTICAL BENDS: ALONG EACH SIDE OF BEND.
   B. HORIZONTAL/VERTICAL BENDS - OFFSET: ALONG THE OUTER SIDE OF EACH BEND. ALL PIPE BETWEEN THE TWO BENDS SHALL BE RESTRAINED JOINT.
   C. DEAD ENDS: ALONG PIPE FROM THE PLUG.
   D. VALVES: ALONG THE PIPE IN EACH DIRECTION FROM THE VALVE .
   E. REDUCERS: ALONG THE LARGER PIPE.
   F. TEES: ALONG THE BRANCH PIPE FROM THE TEE .
3. WHEN IT IS NOT POSSIBLE TO INSTALL THE RESTRAINED LENGTHS AS NOTED BY THIS TABLE, CONTRACTOR SHALL INSTALL THE APPROPRIATE CONCRETE THRUST RESTRAINTS AS PER THE DETAILS HEREIN.

BASED ON TEST PRESSURE OF 200 P.S.I.

HORIZONTAL RESTRAINT
(ALL AREAS GIVEN ARE IN SQUARE FEET)

PIPE SIZE	DEGREE OF BEND	LBS. STATIC THRUST *	ALLOWABLE SOIL BEARING (PSF) 1000	2000	3000	4000	5000	6000	7000	8000
4"	11/4°	616	1	1	1	1	1	1	1	1
	22 1/2°	1,226	1	1	1	1	1	1	1	1
	45°	2,405	2	1	1	1	1	1	1	1
	90°	4,444	4	2	1	1	1	1	1	1
	TEE/PLUG	3,143	3	2	1	1	1	1	1	1
6"	11/4°	1,385	2	1	1	1	1	1	1	1
	22 1/2°	2,758	3	2	1	1	1	1	1	1
	45°	5,409	6	3	2	2	1	1	1	1
	90°	9,999	10	5	3	3	2	2	2	1
	TEE/PLUG	7,068	7	4	3	2	2	1	1	1
8"	11/4°	2,424	3	1	1	1	1	1	1	1
	22 1/2°	4,904	5	3	2	1	1	1	1	1
	45°	9,69	10	5	3	2	2	2	2	1
	90°	17,773	18	9	6	4	4	3	3	2
	TEE/PLUG	12,568	13	6	4	3	3	2	2	2
10"	11/4°	3,846	4	2	2	1	1	1	1	1
	22 1/2°	7,661	8	4	3	2	2	2	1	1
	45°	15,028	15	8	5	4	3	3	2	2
	90°	27,768	28	14	9	7	6	5	4	3
	TEE/PLUG	19,635	20	10	7	5	4	3	3	2
12"	11/4°	5,543	6	3	2	2	1	1	1	1
	22 1/2°	11,032	11	6	4	3	2	2	2	2
	45°	21,641	22	11	7	5	4	4	3	3
	90°	39,987	40	20	13	10	8	7	6	5
	TEE/PLUG	28,274	28	14	9	7	6	5	4	4
14"	11/4°	7,544	8	4	3	2	2	2	1	1
	22 1/2°	15,066	15	8	5	4	3	3	2	2
	45°	29,455	29	15	10	7	6	5	4	4
	90°	54,426	54	27	18	14	11	9	8	7
	TEE/PLUG	38,485	38	19	13	10	8	6	5	5
16"	11/4°	9,854	10	5	3	3	2	2	2	2
	22 1/2°	19,612	20	10	7	5	4	3	3	3
	45°	38,471	38	17	13	10	8	6	5	5
	90°	71,085	71	36	24	18	14	12	10	9
	TEE/PLUG	50,265	50	25	17	13	10	8	7	6

* INCLUDES 1.25 SAFETY FACTOR

VERTICAL RESTRAINT
(ALL VOLUMES GIVEN ARE IN CUBIC YARDS)**

PIPE SIZE	RESTRAINING RODS NO.REQ'D	DIA.	DEGREE OF BEND 11 1/4°	22 1/2°	45°
4"	2	1/2"	0.25	0.50	0.75
6"	2	1/2"	0.50	1.0	1.75
8"	2	5/8"	0.75	1.50	3.0
10"	2	3/4"	1.25	2.25	4.50
12"	2	7/8"	1.75	3.25	6.50
14"	4	5/8"	2.25	4.50	8.75
16"	4	3/4"	3.0	6.0	11.50

**INCLUDES 1.50 SAFETY FACTOR

GENERAL NOTES:
1. CONCRETE SHALL BE CLASS "B".
2. CONCRETE SHALL NOT CONTACT BOLTS ENDS OF MECHANICAL JOINT FITTINGS.
3. CONSULT WITH ENGINEER FOR CONCRETE REQUIREMENTS ON MAINS LARGER THAN 16 INCHES. (FOR VERTICAL & HORIZONTAL BENDS)
4. ALLOWABLE SOIL BEARING SHALL BE DETERMINED BY THE ENGINEER.

REVISIONS NO.	DATE	DESCRIPTION

SHEET 2 OF 2

THRUST RESTRAINT FOR WATER MAINS

STATE OF NORTH CAROLINA
DIVISION OF HIGHWAYS
RALEIGH, N.C.

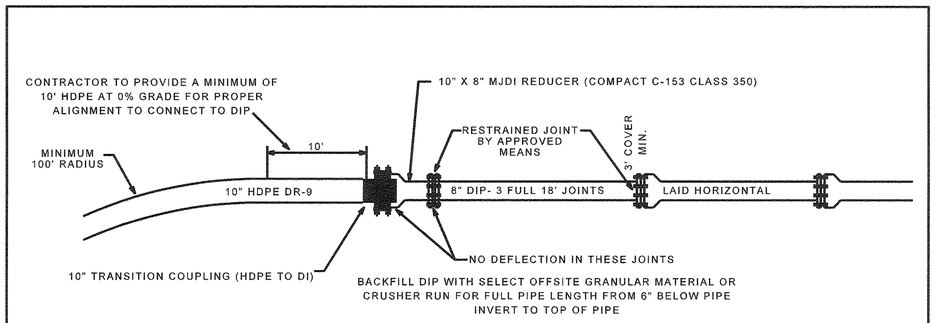

10" HDPE X 8" DIP TRANSITION

NOT TO SCALE

PROJECT REFERENCE NO.	SHEET NO.
B-4708	UC-4

UTILITY DESIGN ENGINEER

NORTH CAROLINA PROFESSIONAL SEAL ENGINEER KEVIN C. ZOPPI

2014-FEB-03

MA Engineering CONSULTANTS, INC. 598 E. Chatham Street, Suite 137 Cary, N. C. 27511

HNTB HNTB NORTH CAROLINA, P.C. 343 E. Six Forks Road, Suite 200 Raleigh, North Carolina 27609 NC License No: C-1554

DATE: FEBRUARY 3, 2014

UTILITY OWNERS ON THIS PROJECT:

1. BEAUFORT COUNTY
UTILITY: 8" WATER LINE
CONTACT: ERICK JENNINGS
PHONE: 252-975-0720

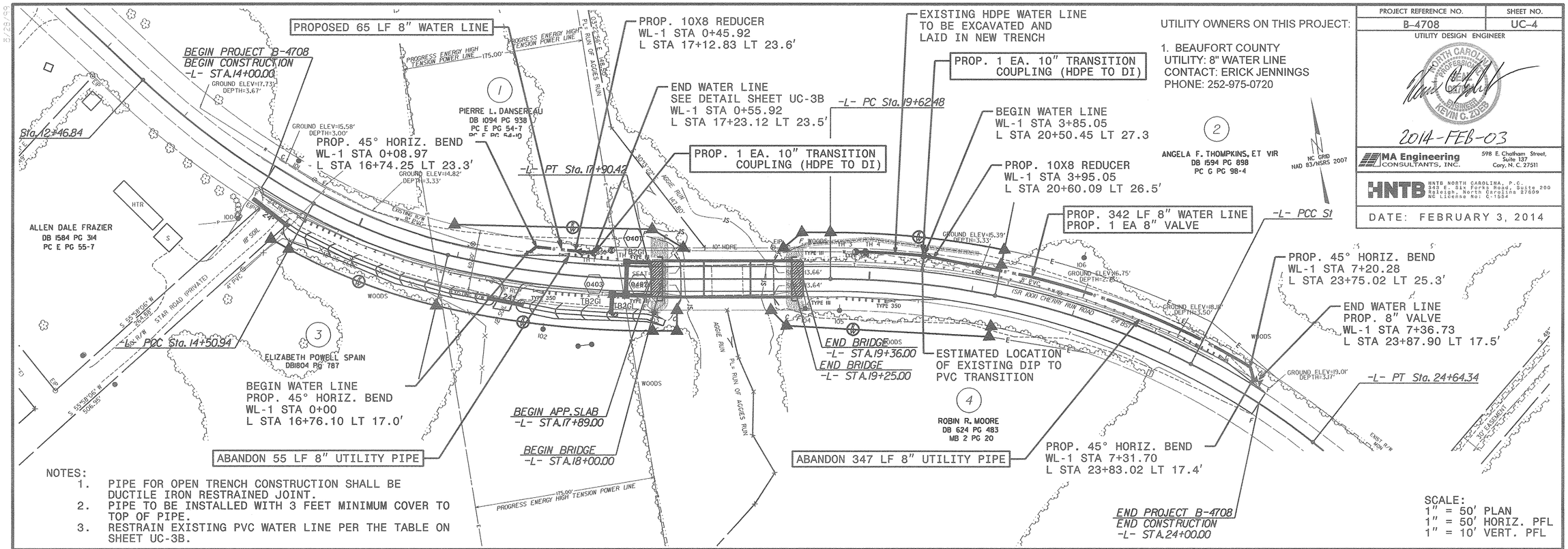

NOTES:

1. PIPE FOR OPEN TRENCH CONSTRUCTION SHALL BE DUCTILE IRON RESTRAINED JOINT.
2. PIPE TO BE INSTALLED WITH 3 FEET MINIMUM COVER TO TOP OF PIPE.
3. RESTRAIN EXISTING PVC WATER LINE PER THE TABLE ON SHEET UC-3B.

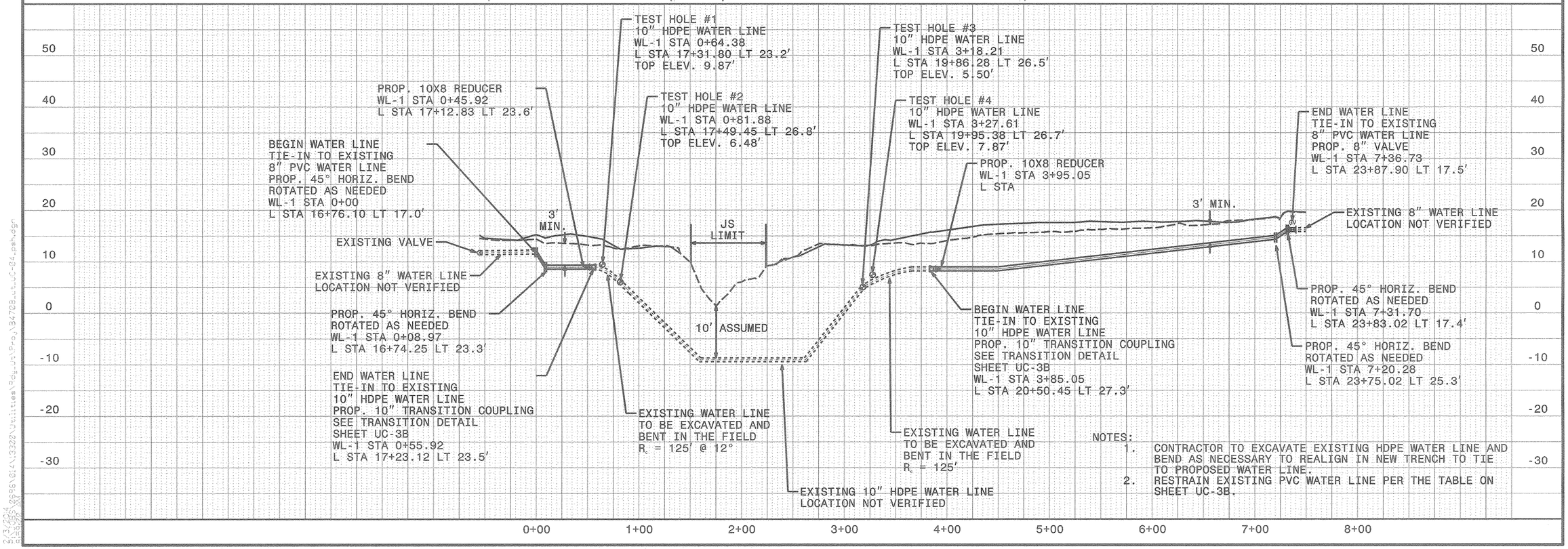

NOTES:

1. CONTRACTOR TO EXCAVATE EXISTING HDPE WATER LINE AND BEND AS NECESSARY TO REALIGN IN NEW TRENCH TO TIE TO PROPOSED WATER LINE.
2. RESTRAIN EXISTING PVC WATER LINE PER THE TABLE ON SHEET UC-3B.

TIP PROJECT: B-4708

T.I.P. NO.	SHEET NO.
B-4708	UO-1

STATE OF NORTH CAROLINA
DIVISION OF HIGHWAYS

UTILITIES BY OTHERS PLANS
BEAUFORT COUNTY

LOCATION: BRIDGE NO. 005 OVER AGGIE RUN ON SR 1001 (CHERRY RUN RD.)

TYPE OF WORK: UTILITY BY OTHERS RELOCATION

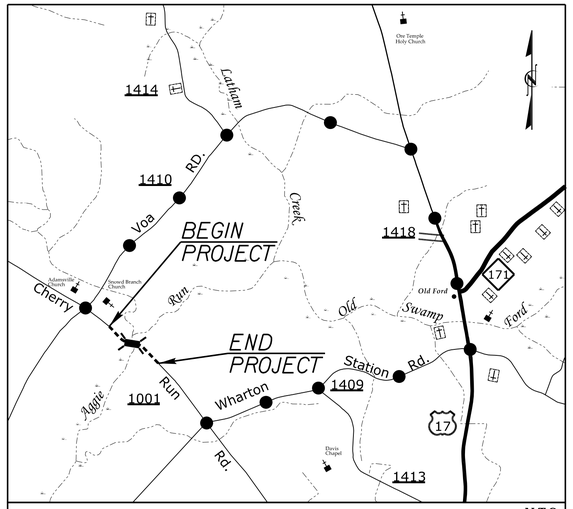

VICINITY MAP — DETOUR ROUTE — N.T.S.

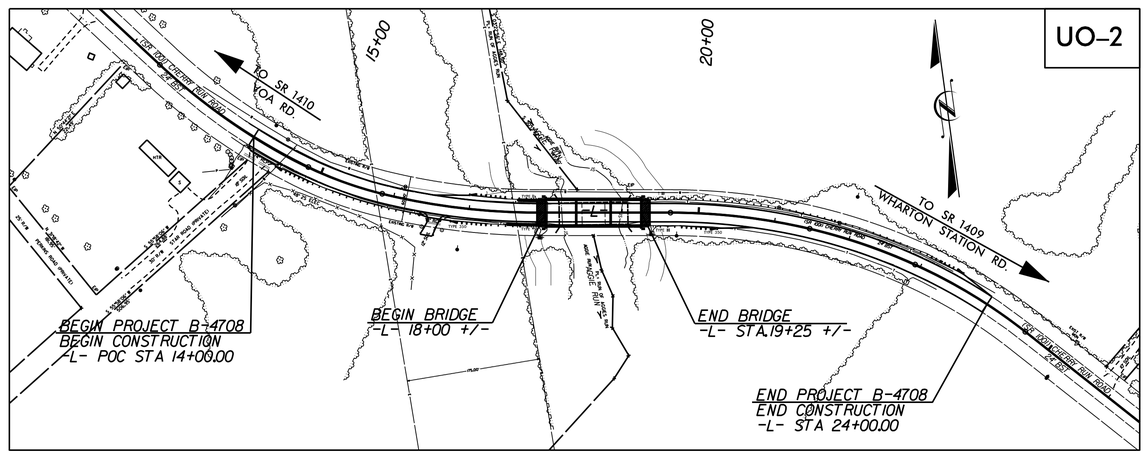

GRAPHIC SCALES

50 25 0 50 100
PLANS

50 25 0 50 100
PROFILE (HORIZONTAL)

10 5 0 10 20
PROFILE (VERTICAL)

INDEX OF SHEETS

SHEET NO.	DESCRIPTION
UO-1	TITLE SHEET
UO-2	PLAN SHEET

UTILITY OWNERS ON PROJECT

(1) POWER – CITY OF WASHINGTON – MACON RESPESS – 252.402.6641

(2) TELEPHONE – CENTURYLINK – ROD MEDLIN – 252.413.7711

UTILITY DESIGN BY:
MA Engineering CONSULTANTS, INC.
598 East Chatham Street Suite 137 Cary, NC 27511
Phone: 919 297 0220 Fax: 919 297 0221

NCDOT PROJECT ENGINEER:
MARIA ROGERSON, P.E.

PREPARED FOR:
NORTH CAROLINA
DEPARTMENT OF TRANSPORTATION
DIVISION BRIDGE PROGRAM

$$$$SYSTIME$$$$
$$$$USERNAME$$$$DGN

PROJECT REFERENCE NO.	SHEET NO.
B-4708	UO-2

UTILITIES BY OTHERS

NOTE:
ALL PROPOSED UTILITY WORK SHOWN ON THIS SHEET WILL BE DONE BY OTHERS

NOTE:

1. THE CITY OF WASHINGTON WILL BACK FEED THE LINE DURING CONTRUCTION AND WILL REQUIRE A 30 DAY NOTICE.

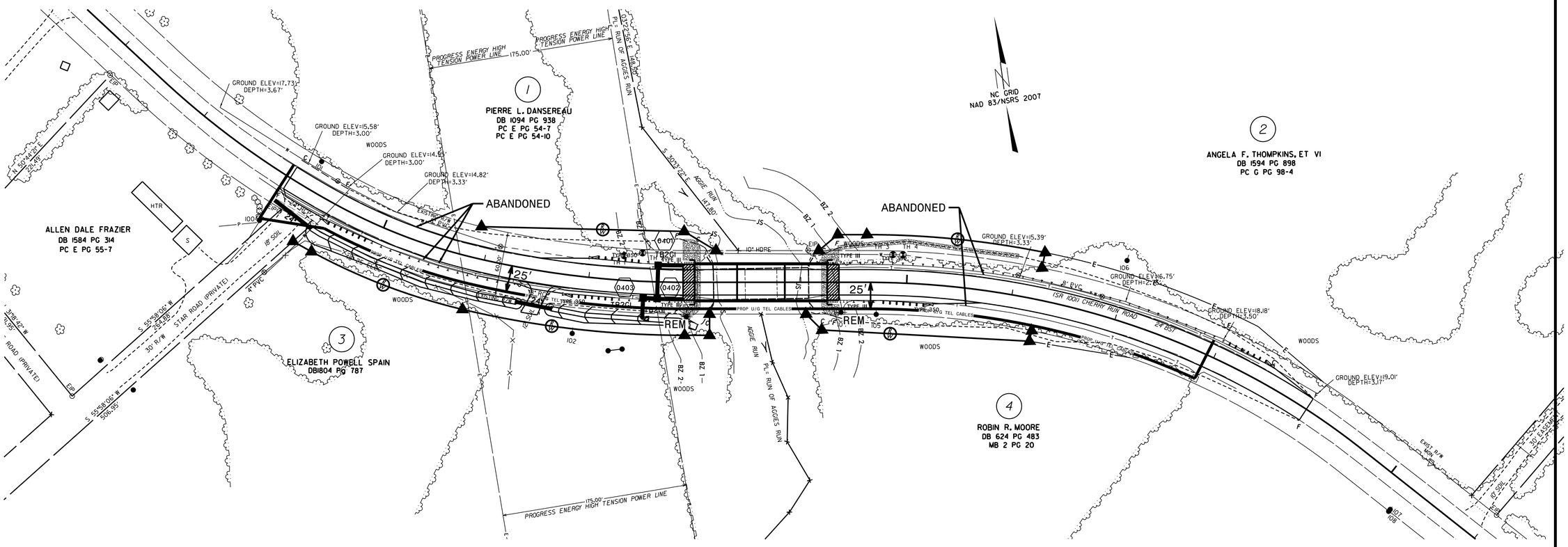

MA Engineering CONSULTANTS, INC.
598 E. Chatham Street, Suite 137
Cary, N. C. 27511