DocuSign Envelope ID: 83B1DF25-4863-47FC-ADEE-57CBA8B625AC

09/08/99

PROJECT: 17BP.2.R.95

CONTRACT: DB00434

See Sheet 1A For Index of Sheets
See Sheet 1B For Conventional Symbols
See Sheet RW01 thru RW04 for Survey Control & Right-of-Way Sheets

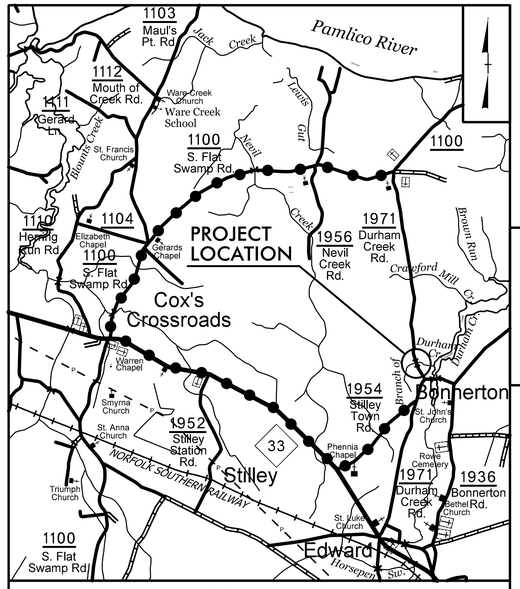

VICINITY MAP
—●—●—●— OFFSITE DETOUR

FINAL PLANS

STATE OF NORTH CAROLINA
DIVISION OF HIGHWAYS

BEAUFORT COUNTY

LOCATION: REPLACE BRIDGE NO. 14 ON SR 1971 OVER BRANCH OF DURHAM CREEK

TYPE OF WORK: GRADING, DRAINAGE, STRUCTURE AND PAVING

STATE	STATE PROJECT REFERENCE NO.	SHEET NO.	TOTAL SHEETS
N.C.	17BP.2.R.95	1	

STATE PROJ. NO.	F.A. PROJ. NO.	DESCRIPTION
17BP.2.R.95	NA	PE
17BP.2.R.95	NA	R/W, UTIL
17BP.2.R.95	NA	CONST.

NAD 83/2011

4

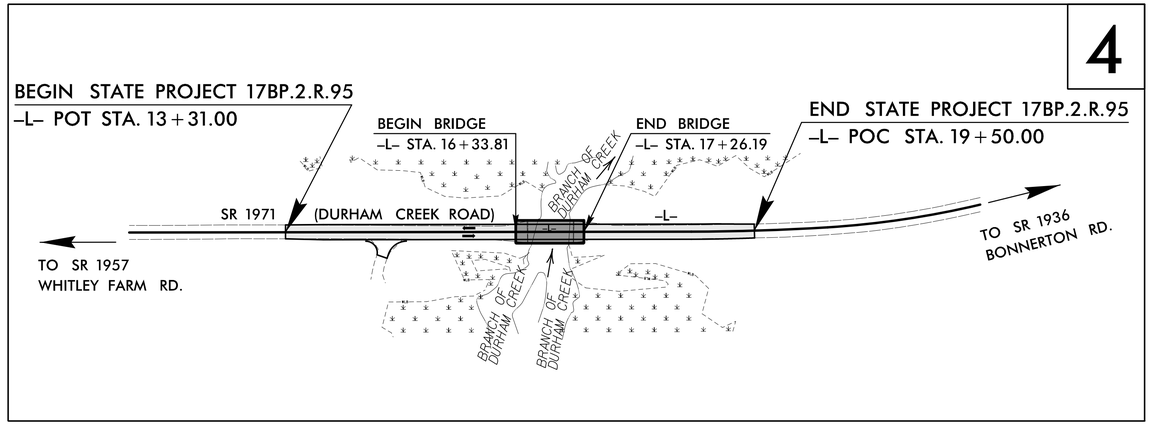

DOCUMENT NOT CONSIDERED FINAL UNLESS ALL SIGNATURES COMPLETED

GRAPHIC SCALES

50 25 0 50 100
PLANS

50 25 0 50 100
PROFILE (HORIZONTAL)

10 5 0 10 20
PROFILE (VERTICAL)

DESIGN DATA

ADT 2016 = 170
ADT 2040 = 280
V = 60 MPH
T = 6 %

FUNCT CLASS =
LOCAL RURAL
SUB-REGIONAL TIER

PROJECT LENGTH

LENGTH ROADWAY PROJECT 17BP.2.R.95	=	0.100 mile
LENGTH STRUCTURES PROJECT 17BP.2.R.95	=	0.017 mile
TOTAL LENGTH PROJECT 17BP.2.R.95	=	0.117 mile

Prepared For:
DIVISION OF HIGHWAYS
1000 Birch Ridge Dr., Raleigh NC, 27610
By:
TGS ENGINEERS
706 HILLSBOROUGH ST.
SUITE 200
RALEIGH, NC 27603
PH (919) 773-8887
CORP. LICENSE NO.: C-0275

2018 STANDARD SPECIFICATIONS

RIGHT OF WAY DATE:
JUNE 27, 2019

LETTING DATE:
APRIL 28, 2021

V. MARCUS LOWERY, PE
PROJECT ENGINEER

NYA BOAYUE, PE
PROJECT DESIGN ENGINEER

MICHAEL C. AMAN, PE
NCDOT DIVISION 2 CONTACT

HYDRAULICS ENGINEER

DocuSigned by:
Benjamin J. Henegar
SIGNATURE:
P.E.
3/23/2021 | 9:34 AM PDT

NORTH CAROLINA PROFESSIONAL SEAL 044158 ENGINEER BENJAMIN J. HENEGAR

ROADWAY DESIGN ENGINEER

DocuSigned by:
V. Marcus Lowery
SIGNATURE:
P.E.
3/23/2021 | 11:51 AM EDT

NORTH CAROLINA PROFESSIONAL SEAL 027418 ENGINEER V. MARCUS LOWERY

STATE OF NORTH CAROLINA DEPARTMENT OF TRANSPORTATION

3/23/2021
C:\Projects\NCDOT\B-4709\Roadway\Proj\B-4709_Rdy_tsh.dgn
User:mlowery

DocuSign Envelope ID: 4D2B8FF8-B651-4681-85C4-4737F72DA2A6

PROJECT REFERENCE NO.	SHEET NO.
17BP.2.R.95	1A

DOCUMENT NOT CONSIDERED FINAL UNLESS ALL SIGNATURES COMPLETED

ROADWAY DESIGN ENGINEER

NORTH CAROLINA PROFESSIONAL SEAL 027418 ENGINEER MARCUS LOWERY

DocuSigned by: Marcus Lowery
E8D20C5E1E0D4C...

2/14/2020 | 3:10 PM EST

INDEX OF SHEETS

SHEET NUMBER	SHEET
1	TITLE SHEET
1A	INDEX OF SHEETS, GENERAL NOTES, AND LIST OF STANDARD DRAWINGS
1B	CONVENTIONAL SYMBOLS
2A–1	PAVEMENT SCHEDULE, TYPICAL SECTIONS, DETAIL SHOWING METHOD OF WEDGING, DETAIL FOR SHOULDER BERM GUTTER, AND INCIDENTAL MILLING DETAIL
2C–1 THRU 2C–2	DETAIL SHEETS FOR MODIFIED RAIL SECTION AND TYPE III UNIT
3B–1	SUMMARY OF EARTHWORK, PAVEMENT REMOVAL SUMMARY, SHOULDER BERM GUTTER SUMMARY, & GUARDRAIL SUMMARY
3D–1	DRAINAGE SUMMARY
3G–1	GEOTECHNICAL SUMMARY
4	PLAN / PROFILE SHEET
RW01 THRU RW04	SURVEY CONTROL AND RIGHT–OF–WAY SHEETS
TMP–1 THRU TMP–3	TRANSPORTATION MANAGEMENT PLANS
EC–1 THRU EC–5	EROSION CONTROL PLANS
P–1	PERMIT DRAWING
UC–1 THRU UC–4	UTILITY CONSTRUCTION PLANS
UO–1 THRU UO–2	UTILITIES BY OTHERS PLANS
X–1 THRU X–4	CROSS SECTIONS
S–1 THRU S–20	STRUCTURE PLANS

GENERAL NOTES

GENERAL NOTES: 2018 SPECIFICATIONS EFFECTIVE: 01–16–2018
REVISED:

GRADE LINE:
GRADING AND SURFACING:

THE GRADE LINES SHOWN DENOTE THE FINISHED ELEVATION OF THE PROPOSED SURFACING AT GRADE POINTS SHOWN ON THE TYPICAL SECTIONS. GRADE LINES MAY BE ADJUSTED AT THEIR BEGINNING AND ENDING AND AT STRUCTURES AS DIRECTED BY THE ENGINEER IN ORDER TO SECURE A PROPER TIE–IN.

CLEARING:

CLEARING ON THIS PROJECT SHALL BE PERFORMED TO THE LIMITS ESTABLISHED BY METHOD II.

SUPERELEVATION:

ALL CURVES ON THIS PROJECT SHALL BE SUPERELEVATED IN ACCORDANCE WITH STD. NO. 225.04 USING THE RATE OF SUPERELEVATION AND RUNOFF SHOWN ON THE PLANS. SUPERELEVATION IS TO BE REVOLVED ABOUT THE GRADE POINTS SHOWN ON THE TYPICAL SECTIONS.

SHOULDER CONSTRUCTION:

ASPHALT, EARTH, AND CONCRETE SHOULDER CONSTRUCTION ON THE HIGH SIDE OF SUPERELEVATED CURVES SHALL BE IN ACCORDANCE WITH STD. NO. 560.01

SUBSURFACE DRAINS:

SUBSURFACE DRAINS SHALL BE CONSTRUCTED IN ACCORDANCE WITH STD. NO. 815.02 AT LOCATIONS DIRECTED BY THE ENGINEER.

GUARDRAIL:

THE GUARDRAIL LOCATIONS SHOWN ON THE PLANS MAY BE ADJUSTED DURING CONSTRUCTION AS DIRECTED BY THE ENGINEER. THE CONTRACTOR SHOULD CONSULT WITH THE ENGINEER PRIOR TO ORDERING GUARDRAIL MATERIAL.

SUBSURFACE PLANS:

STRUCTURE SUBSURFACE PLANS ARE AVAILABLE ON THIS PROJECT.

END BENTS:

THE ENGINEER SHALL CHECK THE STRUCTURE END BENT PLANS, DETAILS, AND CROSS–SECTION PRIOR TO SETTING OF THE SLOPE STAKES FOR THE EMBANKMENT OR EXCAVATION APPROACHING A BRIDGE.

UTILITIES:

UTILITY OWNERS ON THIS PROJECT ARE

POWER — TIDELAND EMC

TELECOM — CENTURYLINK

WATER — BEAUFORT COUNTY WATER DEPARTMENT

ANY RELOCATION OF EXISTING UTILITIES WILL BE ACCOMPLISHED BY OTHERS, EXCEPT AS SHOWN ON THE PLANS.

RIGHT–OF–WAY MARKERS:

ALL RIGHT–OF–WAY MARKERS ON THIS PROJECT SHALL BE PLACED BY OTHERS.

STANDARD DRAWINGS

2018 ROADWAY ENGLISH STANDARD DRAWINGS EFF. 01–16–2018
REV.

The following Roadway Standards as appear in "Roadway Standard Drawings" Highway Design Branch – N. C. Department of Transportation – Raleigh, N. C., Dated January, 2018 are applicable to this project and by reference hereby are considered a part of these plans:

STD.NO.	TITLE
DIVISION 2 – EARTHWORK	
200.02	Method of Clearing – Method II
225.02	Guide for Grading Subgrade – Secondary and Local
225.04	Method of Obtaining Superelevation – Two Lane Pavement
DIVISION 3 – PIPE CULVERTS	
300.01	Method of Pipe Installation
DIVISION 4 – MAJOR STRUCTURES	
422.02	Bridge Approach Fills – Type II Modiefied Approach Fill
DIVISION 5 – SUBGRADE, BASES AND SHOULDERS	
560.01	Method of Shoulder Construction – High Side of Superelevated Curve – Method I
DIVISION 8 – INCIDENTALS	
815.02	Subsurface Drain
840.00	Concrete Base Pad for Drainage Structures
840.25	Anchorage for Frames – Brick or Concrete or Precast
840.29	Frames and Narrow Slot Flat Grates
840.35	Traffic Bearing Grated Drop Inlet – for Cast Iron Double Frame and Grates
840.46	Traffic Bearing Precast Drainage Structures
840.66	Drainage Structure Steps
846.01	Concrete Curb, Gutter and Curb & Gutter
846.04	Drop Inlet Installation in Shoulder Berm Gutter
862.01	Guardrail Placement
862.02	Guardrail Installation
862.03	Structure Anchor Units
876.02	Guide for Rip Rap at Pipe Outlets

2/14/2020
R:\HDR\B-4709\Roadway\Proj\b4709_rdy_psh_1a.dgn
lsanjuan

12/2/2016

PROJECT REFERENCE NO.	SHEET NO.
17BP.2.R.95	1B

STATE OF NORTH CAROLINA, DIVISION OF HIGHWAYS

CONVENTIONAL PLAN SHEET SYMBOLS

Note: Not to Scale

**S.U.E. = Subsurface Utility Engineering*

BOUNDARIES AND PROPERTY:

- State Line
- County Line
- Township Line
- City Line
- Reservation Line
- Property Line
- Existing Iron Pin — EIP
- Computed Property Corner
- Property Monument — ECM
- Parcel/Sequence Number — 123
- Existing Fence Line
- Proposed Woven Wire Fence
- Proposed Chain Link Fence
- Proposed Barbed Wire Fence
- Existing Wetland Boundary — WLB
- Proposed Wetland Boundary — WLB
- Existing Endangered Animal Boundary — EAB
- Existing Endangered Plant Boundary — EPB
- Existing Historic Property Boundary — HPB
- Known Contamination Area: Soil — S
- Potential Contamination Area: Soil — S
- Known Contamination Area: Water — W
- Potential Contamination Area: Water — W
- Contaminated Site: Known or Potential

BUILDINGS AND OTHER CULTURE:

- Gas Pump Vent or U/G Tank Cap
- Sign — S
- Well — W
- Small Mine
- Foundation
- Area Outline
- Cemetery
- Building
- School
- Church
- Dam

HYDROLOGY:

- Stream or Body of Water
- Hydro, Pool or Reservoir
- Jurisdictional Stream — JS
- Buffer Zone 1 — BZ 1
- Buffer Zone 2 — BZ 2
- Flow Arrow
- Disappearing Stream
- Spring
- Wetland
- Proposed Lateral, Tail, Head Ditch — FLOW
- False Sump

RAILROADS:

- Standard Gauge — CSX TRANSPORTATION
- RR Signal Milepost — MILEPOST 35
- Switch — SWITCH
- RR Abandoned
- RR Dismantled

RIGHT OF WAY & PROJECT CONTROL:

- Secondary Horiz and Vert Control Point
- Primary Horiz Control Point
- Primary Horiz and Vert Control Point
- Exist Permanent Easment Pin and Cap
- New Permanent Easement Pin and Cap
- Vertical Benchmark
- Existing Right of Way Marker
- Existing Right of Way Line
- New Right of Way Line — RW
- New Right of Way Line with Pin and Cap — RW
- New Right of Way Line with Concrete or Granite R/W Marker — RW
- New Control of Access Line with Concrete C/A Marker — CA
- Existing Control of Access — CA
- New Control of Access — CA
- Existing Easement Line — E
- New Temporary Construction Easement — E
- New Temporary Drainage Easement — TDE
- New Permanent Drainage Easement — PDE
- New Permanent Drainage / Utility Easement — DUE
- New Permanent Utility Easement — PUE
- New Temporary Utility Easement — TUE
- New Aerial Utility Easement — AUE

ROADS AND RELATED FEATURES:

- Existing Edge of Pavement
- Existing Curb
- Proposed Slope Stakes Cut — C
- Proposed Slope Stakes Fill — F
- Proposed Curb Ramp — CR
- Existing Metal Guardrail
- Proposed Guardrail
- Existing Cable Guiderail
- Proposed Cable Guiderail
- Equality Symbol
- Pavement Removal

VEGETATION:

- Single Tree
- Single Shrub
- Hedge
- Woods Line
- Orchard
- Vineyard — Vineyard

EXISTING STRUCTURES:

MAJOR:

- Bridge, Tunnel or Box Culvert — CONC
- Bridge Wing Wall, Head Wall and End Wall — CONC WW

MINOR:

- Head and End Wall — CONC HW
- Pipe Culvert
- Footbridge
- Drainage Box: Catch Basin, DI or JB — CB
- Paved Ditch Gutter
- Storm Sewer Manhole — S
- Storm Sewer — S

UTILITIES:

POWER:

- Existing Power Pole
- Proposed Power Pole
- Existing Joint Use Pole
- Proposed Joint Use Pole
- Power Manhole — P
- Power Line Tower
- Power Transformer
- U/G Power Cable Hand Hole
- H-Frame Pole
- U/G Power Line LOS B (S.U.E.*) — P
- U/G Power Line LOS C (S.U.E.*) — P
- U/G Power Line LOS D (S.U.E.*) — P

TELEPHONE:

- Existing Telephone Pole
- Proposed Telephone Pole
- Telephone Manhole — T
- Telephone Pedestal — T
- Telephone Cell Tower
- U/G Telephone Cable Hand Hole — HH
- U/G Telephone Cable LOS B (S.U.E.*) — T
- U/G Telephone Cable LOS C (S.U.E.*) — T
- U/G Telephone Cable LOS D (S.U.E.*) — T
- U/G Telephone Conduit LOS B (S.U.E.*) — TC
- U/G Telephone Conduit LOS C (S.U.E.*) — TC
- U/G Telephone Conduit LOS D (S.U.E.*) — TC
- U/G Fiber Optics Cable LOS B (S.U.E.*) — T FO
- U/G Fiber Optics Cable LOS C (S.U.E.*) — T FO
- U/G Fiber Optics Cable LOS D (S.U.E.*) — T FO

WATER:

- Water Manhole — W
- Water Meter
- Water Valve
- Water Hydrant
- U/G Water Line LOS B (S.U.E*) — W
- U/G Water Line LOS C (S.U.E*) — W
- U/G Water Line LOS D (S.U.E*) — W
- Above Ground Water Line — A/G Water

TV:

- TV Pedestal — C
- TV Tower
- U/G TV Cable Hand Hole — HH
- U/G TV Cable LOS B (S.U.E.*) — TV
- U/G TV Cable LOS C (S.U.E.*) — TV
- U/G TV Cable LOS D (S.U.E.*) — TV
- U/G Fiber Optic Cable LOS B (S.U.E.*) — TV FO
- U/G Fiber Optic Cable LOS C (S.U.E.*) — TV FO
- U/G Fiber Optic Cable LOS D (S.U.E.*) — TV FO

GAS:

- Gas Valve
- Gas Meter
- U/G Gas Line LOS B (S.U.E.*) — G
- U/G Gas Line LOS C (S.U.E.*) — G
- U/G Gas Line LOS D (S.U.E.*) — G
- Above Ground Gas Line — A/G Gas

SANITARY SEWER:

- Sanitary Sewer Manhole
- Sanitary Sewer Cleanout
- U/G Sanitary Sewer Line — SS
- Above Ground Sanitary Sewer — A/G Sanitary Sewer
- SS Forced Main Line LOS B (S.U.E.*) — FSS
- SS Forced Main Line LOS C (S.U.E.*) — FSS
- SS Forced Main Line LOS D (S.U.E.*) — FSS

MISCELLANEOUS:

- Utility Pole
- Utility Pole with Base
- Utility Located Object
- Utility Traffic Signal Box — S
- Utility Unknown U/G Line LOS B (S.U.E.*) — ?UTL
- U/G Tank; Water, Gas, Oil
- Underground Storage Tank, Approx. Loc. — UST
- A/G Tank; Water, Gas, Oil
- Geoenvironmental Boring
- U/G Test Hole LOS A (S.U.E.*)
- Abandoned According to Utility Records — AATUR
- End of Information — E.O.I.

DocuSign Envelope ID: 4D2B8FF8-B651-4681-85C4-4737F72DA2A6

5/14/99

PROJECT REFERENCE NO.	SHEET NO.
17BP.2.R.95	2A-1
R/W SHEET NO.	

ROADWAY DESIGN ENGINEER

NORTH CAROLINA PROFESSIONAL SEAL 027418 ENGINEER MARCUS LOVERY

2/14/2020 | 3:10 PM EST

DOCUMENT NOT CONSIDERED FINAL UNLESS ALL SIGNATURES COMPLETED

TGS ENGINEERS
706 HILLSBOROUGH ST. SUITE 200
RALEIGH, NC 27603
PH (919) 773-8887
CORP. LICENSE NO.: C-0275

PAVEMENT SCHEDULE

FINAL PAVEMENT DESIGN: FEBRUARY 28, 2018

C1	PROP. APPROX. 1½″ ASPHALT CONCRETE SURFACE COURSE, TYPE S9.5B, AT AN AVERAGE RATE OF 165 LBS. PER SQ. YD.
C2	PROP. APPROX. 3″ ASPHALT CONCRETE SURFACE COURSE, TYPE S9.5B, AT AN AVERAGE RATE OF 165 LBS. PER SQ. YD. IN EACH OF TWO LAYERS.
C3	PROP. VAR. DEPTH ASPHALT CONCRETE SURFACE COURSE, TYPE S9.5B, AT AN AVERAGE RATE OF 110 LBS. PER SQ. YD. PER 1″ DEPTH. TO BE PLACED IN LAYERS NOT LESS THAN 1½″ IN DEPTH OR GREATER THAN 2″ IN DEPTH.
E1	PROP. APPROX. 5″ ASPHALT CONCRETE BASE COURSE, TYPE B25.0C, AT AN AVERAGE RATE OF 570 LBS. PER SQ. YD.
E2	PROP. APPROX. 6″ ASPHALT CONCRETE BASE COURSE, TYPE B25.0C, AT AN AVERAGE RATE OF 342 LBS. PER SQ. YD. IN EACH OF TWO LAYERS.
E3	PROP. VAR. DEPTH ASPHALT CONCRETE BASE COURSE, TYPE B25.0C, AT AN AVERAGE RATE OF 114 LBS. PER SQ. YD. PER 1″ DEPTH. TO BE PLACED IN LAYERS NOT LESS THAN 3″ IN DEPTH OR GREATER THAN 5½″ IN DEPTH.
R	CONCRETE SHOULDER BERM GUTTER
T	EARTH MATERIAL
U	EXISTING PAVEMENT
V1	MILLING BITUMINOUS PAVEMENT (VAR. 0″- 1½″ DEPTH - SEE DETAIL THIS SHEET)
W	VARIABLE DEPTH ASPHALT PAVEMENT (SEE WEDGING DETAIL)

NOTE: PAVEMENT EDGE SLOPES ARE 1:1 UNLESS SHOWN OTHERWISE.

DETAIL FOR SHOULDER BERM GUTTER

SEE CORRESPONDING TYPICAL SECTION FOR PAVEMENT DESIGN.
SEE TYPICAL SECTIONS AND PLANS FOR ACTUAL DIMENSIONS.

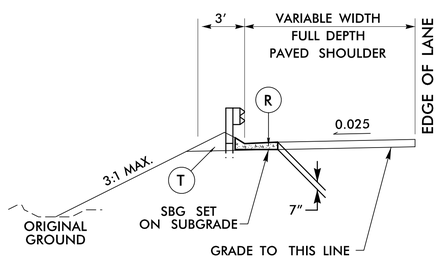

LINE	STATIONS
–L–	Sta. 17+37.07 to 17+74 LT & RT

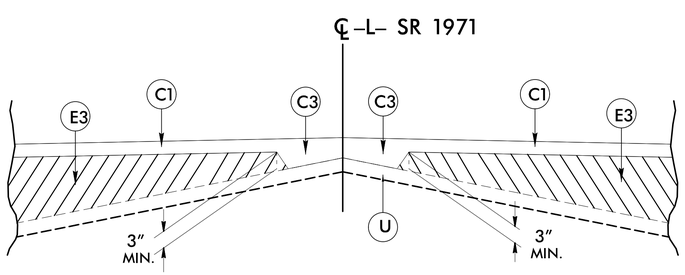

Detail Showing Method of Wedging (W)

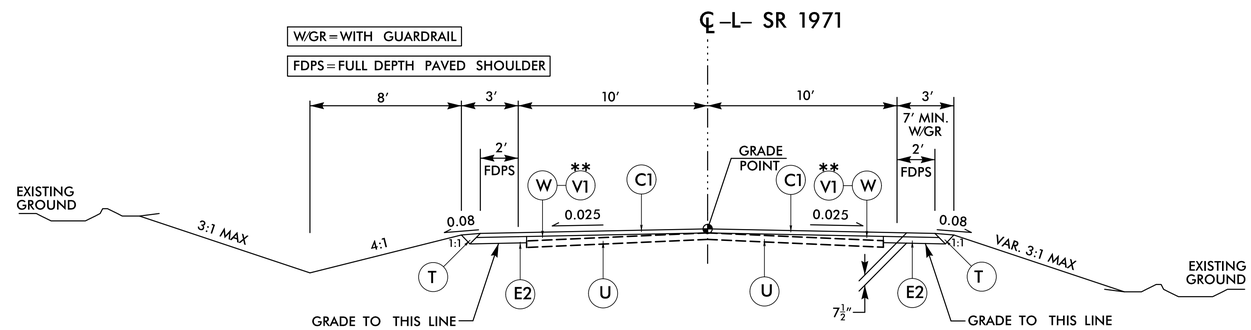

TYPICAL SECTION NO. 1

USE TYPICAL SECTION NO. 1 AS FOLLOWS:

FROM –L– STA 13+31.00 TO STA 15+85.00
FROM –L– STA 17+75.00 TO STA 19+50.00
* SEE DETAIL FOR SHOULDER BERM GUTTER
** SEE INCIDENTAL MILLING DETAIL

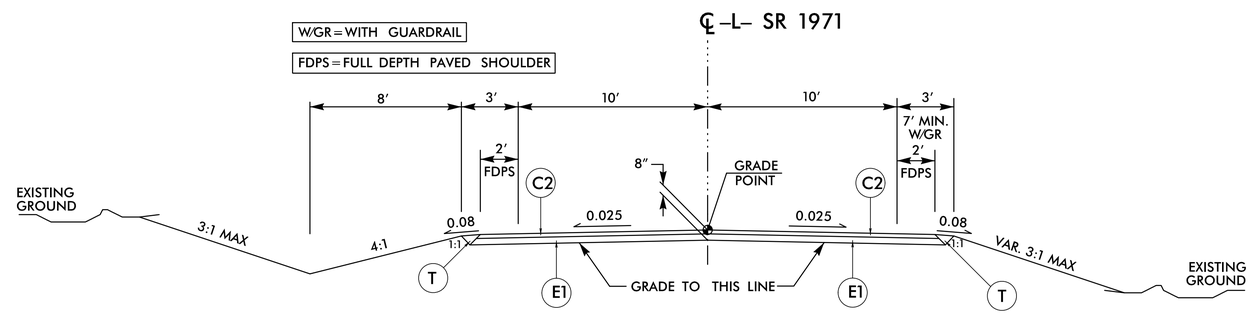

TYPICAL SECTION NO. 2

USE TYPICAL SECTION NO. 2 AS FOLLOWS:

FROM –L– STA 15+85.00 TO STA 16+33.81 (BEGIN BRIDGE)
FROM –L– STA 17+26.19 (END BRIDGE) TO STA 17+75.00
* SEE DETAIL FOR SHOULDER BERM GUTTER

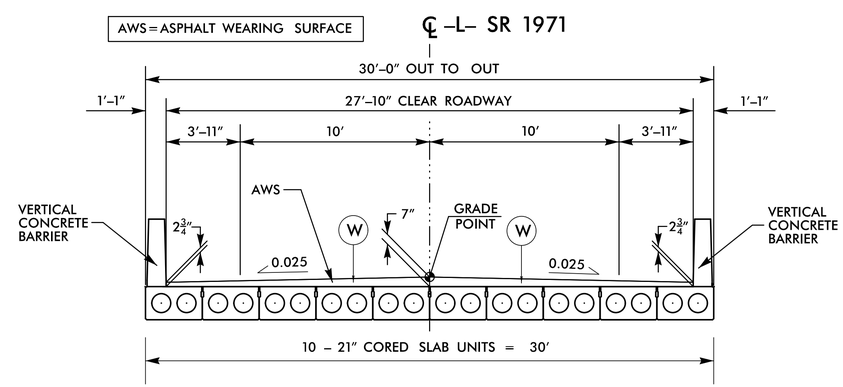

TYPICAL SECTION NO. 3

USE TYPICAL SECTION NO. 3 AS FOLLOWS:

FROM –L– STA 16+33.81 (BEGIN BRIDGE) TO STA 17+26.19 (END BRIDGE)

NOTE: SEE STRUCTURE PLANS FOR BRIDGE CONSTRUCTION DETAILS INCLUDING BARRIER RAIL HEIGHT AND ASPHALT THICKNESS DIMENSIONS

INCIDENTAL MILLING DETAIL

NOTE: MIRROR FOR END OF CONSTRUCTION

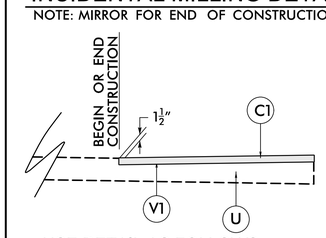

USE DETAIL AS FOLLOWS:

MILLING AND OVERLAY FOR TIE-INS:
-L- STA. 13+31.00 TO -L- STA. 13+90.00
-L- STA. 18+85.00 TO -L- STA 19+50.00

X:\NCDOT\B4709\Roadway\Proj\B-4709_rdy_typ.dgn
2/14/2020
B4709_rdy_typ.dgn
USER: cwright

DocuSign Envelope ID: 4D2B8FF8-B651-4681-85C4-4737F72DA2A6

PROJECT REFERENCE NO.	SHEET NO.
17BP.2.R.95	2C-1

DOCUMENT NOT CONSIDERED FINAL UNLESS ALL SIGNATURES COMPLETED

STATE OF NORTH CAROLINA
DEPT. OF TRANSPORTATION
DIVISION OF HIGHWAYS
RALEIGH, N.C.

ROADWAY DETAIL DRAWING FOR
GUARDRAIL INSTALLATION

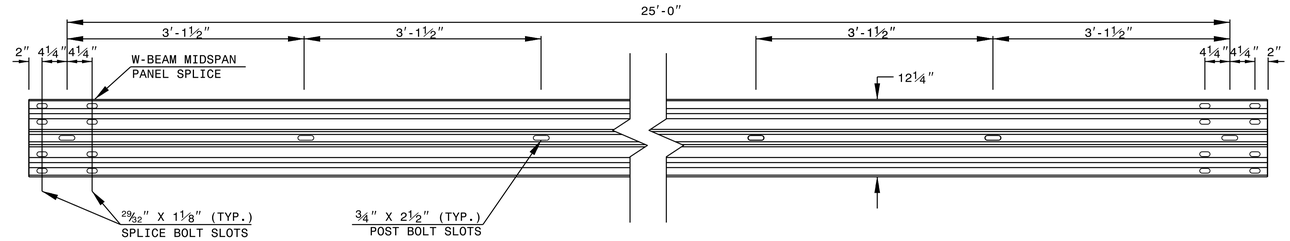

STANDARD W-BEAM GUARDRAIL

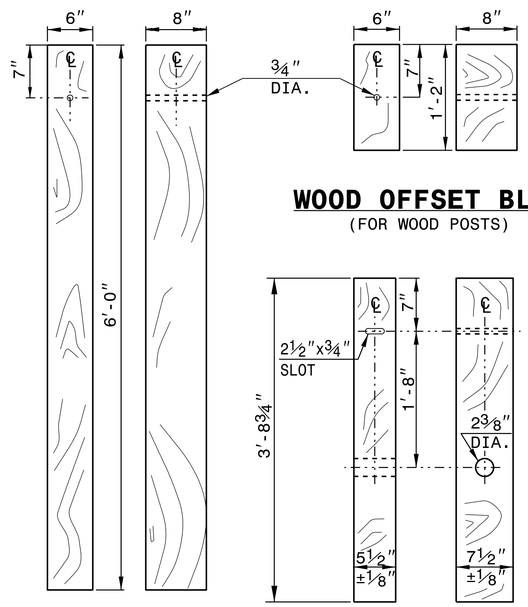

STANDARD LINE POST

WOOD OFFSET BLOCK
(FOR WOOD POSTS)

SHORT WOOD BREAKAWAY POST

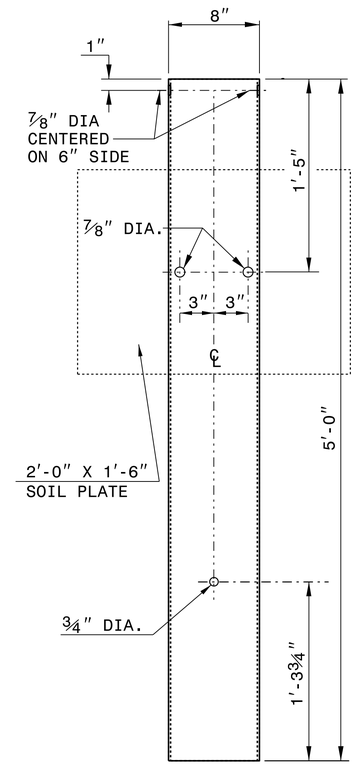

STEEL TUBE
TS 6"x8"x0.1875"

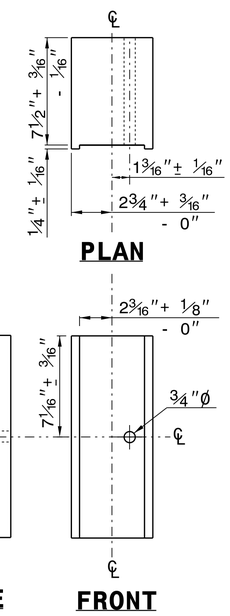

PLAN

SIDE **FRONT**

ROUTED OFFSET BLOCK

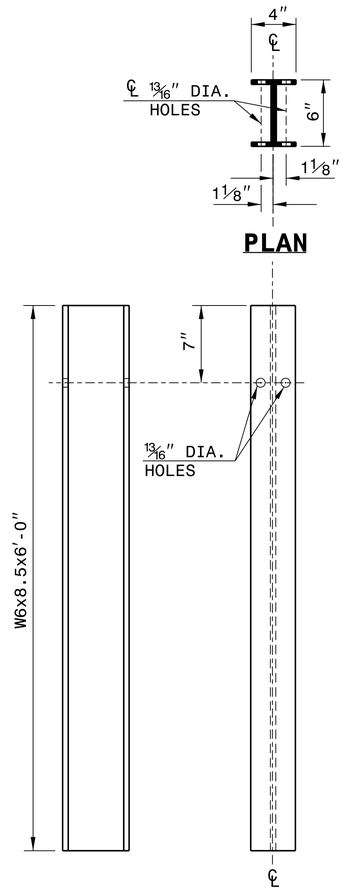

SIDE **FRONT**

"W6" STEEL POST

SYSTEM PARTS

SHEET 6 OF 8
862D02

STATE OF NORTH CAROLINA
DEPT. OF TRANSPORTATION
DIVISION OF HIGHWAYS
RALEIGH, N.C.

ROADWAY DETAIL DRAWING FOR
GUARDRAIL INSTALLATION

SHEET 6 OF 8
862D02

2/17/2020 | 7:04 AM EST

CONTRACTS STANDARDS AND DEVELOPMENT UNIT
Office 919-707-6950 FAX 919-250-4119

SEE TITLE BLOCK

ORIGINAL BY: J.HOWERTON DATE: 3-7-2018
MODIFIED BY: DATE:
CHECKED BY: DATE:
FILE SPEC.:

DocuSign Envelope ID: 4D2B8FF8-B651-4681-85C4-473TF7D0A246

14-DEC-2017 10:36
S:\Contracts\Contracts\Special Details\jhowerton\Standard Drawings\2018 Standard Drawings\Details in Lieu of Standards\Division 8\0862d0301.dgn
jhowerton AT CSD-292595

STATE OF NORTH CAROLINA
DEPT. OF TRANSPORTATION
DIVISION OF HIGHWAYS
RALEIGH, N.C.

ROADWAY DETAIL DRAWING FOR
STRUCTURE ANCHOR UNITS
GUARDRAIL ANCHOR UNIT, TYPE III
FOR ATTACHMENT TO RAIL ON BRIDGE

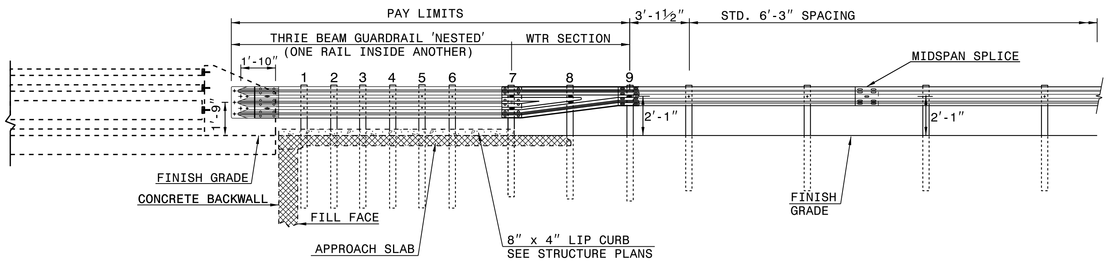

ELEVATION

NOTE:
**POST NOT REQUIRED FOR SKEW ANGLES GREATER THAN 150° OR LESS THAN 30° UNLESS OTHERWISE DIRECTED BY THE ENGINEER.
*THE DISTANCE FROM END OF BRIDGE RAIL TO CENTER LINE OF THE FIRST POST SHOULD BE 11½" IF CONCRETE BACKWALL IS NOT PRESENT.
-SHOULDER BERM GUTTER MUST BE INSTALLED TO THE LIMITS 8" x 4" LIP CURB IS SHOWN IF ANCHOR UNIT IS NOT ADJACENT TO AN APPROACH SLAB.
-MEASURE GUARDRAIL HEIGHT FROM THE TOP OF ADJACENT SURFACE (SHOULDER, BERM, OR GUTTER).
-LAP JOINTS IN THE DIRECTION OF TRAFFIC FLOW.
-SEE SHEET 3 FOR POST SECTIONS 1 THRU 9.

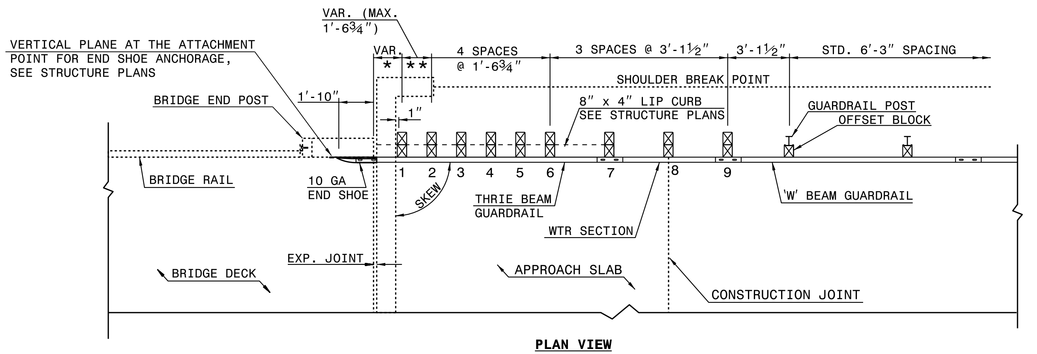

PLAN VIEW

GUARDRAIL ANCHOR UNIT, TYPE III FOR ATTACHMENT TO RAIL ON BRIDGE

SHEET 1 OF 7
862D03

STATE OF NORTH CAROLINA
DEPT. OF TRANSPORTATION
DIVISION OF HIGHWAYS
RALEIGH, N.C.

ROADWAY DETAIL DRAWING FOR
STRUCTURE ANCHOR UNITS
GUARDRAIL ANCHOR UNIT, TYPE III
FOR ATTACHMENT TO RAIL ON BRIDGE

SHEET 1 OF 7
862D03

STATE OF NORTH CAROLINA
DEPT. OF TRANSPORTATION
DIVISION OF HIGHWAYS
RALEIGH, N.C.

ROADWAY DETAIL DRAWING FOR
STRUCTURE ANCHOR UNITS
GUARDRAIL ANCHOR UNIT, TYPE III FOR ATTACHMENT TO
RAIL ON BRIDGE - SUB REGIONAL TIER

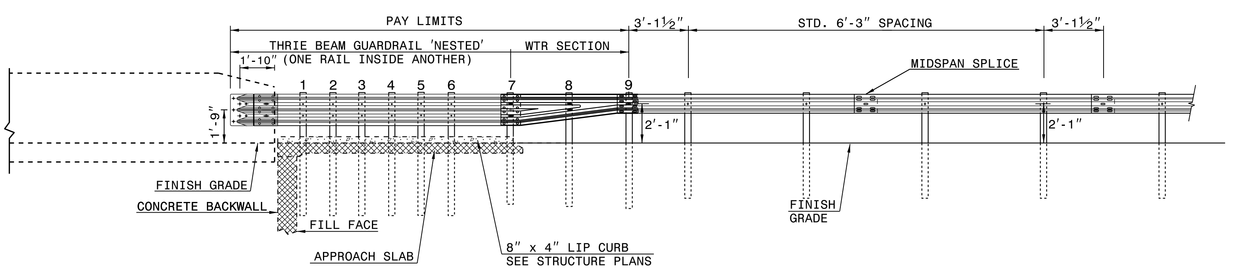

ELEVATION

NOTE:
**POST NOT REQUIRED FOR SKEW ANGLES GREATER THAN 150° OR LESS THAN 30° UNLESS OTHERWISE DIRECTED BY THE ENGINEER.
*THE DISTANCE FROM END OF BRIDGE RAIL TO CENTER LINE OF THE FIRST POST SHOULD BE 11½" IF CONCRETE BACKWALL IS NOT PRESENT.
-SHOULDER BERM GUTTER MUST BE INSTALLED TO THE LIMITS 8" x 4" LIP CURB IS SHOWN IF ANCHOR UNIT IS NOT ADJACENT TO AN APPROACH SLAB.
-MEASURE GUARDRAIL HEIGHT FROM THE TOP OF ADJACENT SURFACE (SHOULDER, BERM, OR GUTTER).
-LAP JOINTS IN THE DIRECTION OF TRAFFIC FLOW.
-SEE SHEET 3 FOR POST SECTIONS 1 THRU 9.

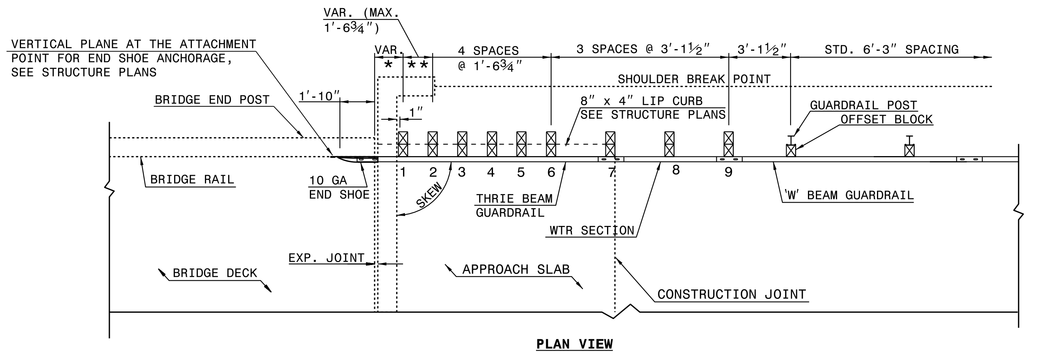

PLAN VIEW

GUARDRAIL ANCHOR UNIT, TYPE III FOR ATTACHMENT TO RAIL ON BRIDGE - SUB REGIONAL TIER

SHEET 2 OF 7
862D03

STATE OF NORTH CAROLINA
DEPT. OF TRANSPORTATION
DIVISION OF HIGHWAYS
RALEIGH, N.C.

ROADWAY DETAIL DRAWING FOR
STRUCTURE ANCHOR UNITS
GUARDRAIL ANCHOR UNIT, TYPE III FOR ATTACHMENT TO
RAIL ON BRIDGE - SUB REGIONAL TIER

SHEET 2 OF 7
862D03

SEE TITLE BLOCK

ORIGINAL BY: J. HOWERTON DATE: 06-22-12
MODIFIED BY: DATE:
CHECKED BY: DATE:
FILE SPEC.:

CONTRACT STANDARDS AND DEVELOPMENT UNIT
Office 919-707-6950 FAX 919-250-4119

DOCUMENT NOT CONSIDERED FINAL UNLESS ALL SIGNATURES COMPLETED

2/17/2020 | 7:04 AM EST

PROJECT REFERENCE NO.: 17BP.2.R.95
SHEET NO.: 2C-2

COMPUTED BY: NKB DATE: 16 MAY 2019
CHECKED BY: VML DATE: 14 FEB 2020

STATE OF NORTH CAROLINA
DIVISION OF HIGHWAYS

PROJECT REFERENCE NO.	SHEET NO.
17BP.2.R.95	3B–1

SUMMARY OF EARTHWORK
IN CUBIC YARDS

LOCATION	UNCLASSIFIED EXCAVATION	UNDERCUT	EMBT+%	BORROW	WASTE
–L– 13+31.00 TO 16+33.81 (BEGIN BRIDGE)	10		160	150	
–L– 17+26.19 (END BRIDGE) TO 19+50.00	16		55	39	
SUBTOTAL	26		215	189	
MATERIAL FOR SHOULDER CONSTRUCTION			18	18	
LOSS DUE TO CLEARING & GRUBBING					
ADDITIONAL UNDERCUT					
SELECT GRANULAR MAT'L IN LIEU OF BORROW					
PROJECT TOTAL	26		233	207	
EST. 5% TO REPLACE TOP SOIL ON BORROW PIT				10	
GRAND TOTAL	26		233	217	
SAY	30			240	

PER GEOTECHNICAL RECOMMENDATIONS:
ESTIMATED UNDERCUT = 300 CY (CONTINGENCY, AS DIRECTED BY THE ENGINEER)
SELECT GRANULAR MATERIAL, CLASS III = 300 CY (CONTINGENCY, TO BE USED AS BACKFILL FOR UNDERCUT)
GEOTEXTILE FOR SOIL STABILIZATION = 300 SY (CONTINGENCY, AS DIRECTED BY THE ENGINEER)
EST. DDE = 8 CY

Earthwork quantities are calculated by the Roadway Design Unit. These earthwork quantities are based in part on subsurface data provided by the Geotechnical Engineering Unit.

Approximate quantities only. Clearing and Grubbing, Unclassified Excavation, Borrow Excavation, Fine Grading, and Removal of Existing Asphalt Pavement will be paid for at the contract lump sum price for "Grading".

PAVEMENT REMOVAL SUMMARY
IN SQUARE YARDS

SURVEY LINE	STATION	STATION	LOCATION LT/RT/CL	SY
–L–	15+85	16+51	CL	153.67
–L–	17+11	17+75	CL	157.22
			TOTAL:	310.89
			SAY:	320

SHOULDER BERM GUTTER SUMMARY

SURVEY LINE	STATION	STATION	LOCATION	LENGTH (LF)
–L–	17+37.07	17+74.00	LT	36.93
–L–	17+37.07	17+74.00	RT	36.93
			TOTAL:	73.86
			SAY:	74

"N" = DISTANCE FROM EDGE OF LANE TO FACE OF GUARDRAIL.
TOTAL SHOULDER WIDTH = DISTANCE FROM EDGE OF TRAVEL LANE TO SHOULDER BREAK POINT.
FLARE LENGTH = DISTANCE FROM LAST SECTION OF PARALLEL GUARDRAIL TO END OF GUARDRAIL.
W = TOTAL WIDTH OF FLARE FROM BEGINNING OF TAPER TO END OF GUARDRAIL.
G = GATING IMPACT ATTENUATOR TYPE 350
NG = NON–GATING IMPACT ATTENUATOR TYPE 350

GUARDRAIL SUMMARY

SURVEY LINE	BEG. STA.	END STA.	LOCATION	LENGTH: STRAIGHT	LENGTH: SHOP CURVED	LENGTH: DOUBLE FACED	WARRANT POINT: APPROACH END	WARRANT POINT: TRAILING END	"N" DIST. FROM E.O.L.	TOTAL SHOUL. WIDTH	FLARE LENGTH: APPROACH END	FLARE LENGTH: TRAILING END	W: APPROACH END	W: TRAILING END	ANCHORS: TYPE GREU, TL–3	ANCHORS: CAT–1	ANCHORS: AT–1	ANCHORS: TYPE III	ANCHORS: B–77	ANCHORS: ·	ANCHORS: ·	ANCHORS: ·	ANCHORS: ·	IMPACT ATTENUATOR TYPE 350: EA	IMPACT ATTENUATOR TYPE 350: G	IMPACT ATTENUATOR TYPE 350: NG	SINGLE FACED GUARDRAIL	REMOVE EXISTING GUARDRAIL	REMOVE AND STOCKPILE EXISTING GUARDRAIL	REMARKS
–L–	15+52.56	16+33.81	LT	81.25′				15+60.00	3′–11″	7′		50′		1′	1			1												
–L–	17+26.19	18+32.44	LT	106.25′			18+00.00		3′–11″	7′	50′		1′		1			1												
–L–	15+52.56	16+33.81	RT	81.25′			15+60.00		3′–11″	7′	50′		1′		1			1												
–L–	17+26.19	18+32.44	RT	106.25′				18+00.00	3′–11″	7′		50′		1′	1			1												
		SUBTOTAL (LF)		375.00′								TOTAL ANCHORS OR ATTENUATORS (EA)			4			4												
		LESS ANCHORS (LF)		275′																										
		TOTAL GUARDRAIL (LF)		100′								ANCHOR UNIT LENGTH (LF)			50′	6.25′	6.25′	18.75′	18.75′											
		SAY GUARDRAIL (LF)		100′			ADDITIONAL GUARDRAIL POSTS: SAY 5 EA					DEDUCTION PER TYPE (LF)			200′			75′												
												TOTAL DEDUCTION (LF)			275.00′															

COMPUTED BY: Briana Camp, EI DATE: 9/28/2018

CHECKED BY: Ben Henegar, PE DATE: 9/28/2018

NORTH CAROLINA DEPARTMENT OF TRANSPORTATION
DIVISION OF HIGHWAYS

Beaufort County
Bridge #060014

PROJECT NO.	SHEET NO.
17BP.2.R.95	3D-1

Note: Invert Elevations indicated are for Bid Purposes only and shall not be used for project construction stakeout. See "Standard Specifications For Roads and Structures, Section 300-5".

LIST OF PIPES, ENDWALLS, ETC. (FOR PIPES 48 INCHES & UNDER)

STATION / SIZE / THICKNESS OR GAUGE	LOCATION (LT, RT, OR CL)	STRUCTURE NO. FROM	STRUCTURE NO. TO	TOP ELEVATION	INVERT ELEVATION	INVERT ELEVATION	SLOPE CRITICAL	DRAINAGE PIPE (RCP, CSP, CAAP, HDPE, or PVC) 12"	15"	18"	24"	30"	36"	42"	48"	DO NOT USE RCP	DO NOT USE CSP	DO NOT USE CAAP	DO NOT USE HDPE	C.S. PIPE 12" .064	15" .064	18" .064	24" .064	30" .079	36" .079	42" .109	48" .109	R.C. PIPE CLASS III 12"	15"	18"	24"	30"	36"	42"	48"	R.C. PIPE CLASS IV 12"	15"	18"	24"	30"	36"	42"	48"	** " R.C. PIPE (CLASS V)	*** RC PIPE CULVERTS, CONTRACTOR DESIGN	*** RC PIPE CULVERTS, CONTRACTOR DESIGN	15" SIDE DRAIN PIPE	18" SIDE DRAIN PIPE	ENDWALLS STD. 838.01 838.11 OR STD. 838.80 (UNLESS NOTED OTHERWISE) CU. YARDS	QUANTITIES FOR DRAINAGE STRUCTURES PER EACH (0' THRU 5.0')	*TOTAL L.F. FOR PAY QUANTITY SHALL BE COL. 'A' + (1.3 X COL.'B') LIN. FT. A 5.0' THRU 10.0'	B 10.0' AND ABOVE	C.B. STD. 840.01 OR STD. 840.02	TYPE OF GRATE E	F	G	CONCRETE TRANSITIONAL SECTION DROP INLET	CATCH BASIN	T.B.D.I. STD. 840.35	FRAME AND NARROW FLAT GRATE STD. 840.29	15" DRAINAGE PIPE ELBOW			CONC. & BRICK PIPE PLUG, C.Y. STD. 840.71	CONC. COLLARS CL. "B" C.Y. STD. 840.72	PIPE REMOVAL LIN. FT.	REMARKS
-L- 17+70	LT	0401		5.1																																														1									1	1							
		0401	0402		1.9	1.8																															24																														
-L- 17+70	RT	0402		5.1																																														1									1	1							
		0402	OUT		1.8	1.8																															12																														
SHEET TOTALS																																					36													2									2	2							

ABBREVIATIONS

C.B.	CATCH BASIN
N.D.I.	NARROW DROP INLET
D.I.	DROP INLET
G.D.I.	GRATED DROP INLET
G.D.I.(N.S.)	(NARROW SLOT)
J.B.	JUNCTION BOX
M.H.	MANHOLE
T.B.D.I.	TRAFFIC BEARING DROP INLET
T.B.J.B.	TRAFFIC BEARING JUNCTION BOX

COMPUTED BY: Tyler C. Bottoms DATE: 12/3/18
CHECKED BY: VML DATE: 8/28/19

(5-15-18)

PROJECT NO.	SHEET NO.
17BP.2.R.95	3G-1

STATE OF NORTH CAROLINA
DIVISION OF HIGHWAYS

SUMMARY OF SUBSURFACE DRAINAGE

LINE	Station	Station	Location LT/RT/CL	Drain Type* UD/BD/SD	LF
CONTINGENCY				SD	200
				TOTAL LF:	200

*UD = Underdrain
*BD = Blind Drain
*SD = Subsurface Drain

SUMMARY OF GEOTEXTILE FOR PAVEMENT STABILIZATION

LINE	Station	Station	Geotextile for Pavement Stabilization SY	Class IV Subgrade Stabilization TONS
CONTINGENCY				
		TOTAL SY/TONS:	0	0*

*Total tons of "Class IV Subgrade Stabilization" is only the estimated quantity for pavement stabilization and may only represent a portion of the subgrade stabilization quantity shown in the Item Sheets of the Proposal.

SUMMARY OF AGGREGATE SUBGRADE/STABILIZATION

LINE	Station	Station	Aggregate Type* ASU(1/2)/ AST	Aggregate Thickness INCHES [8" for ASU(2)]	Shallow Undercut CY	Class IV Subgrade Stabilization TONS	Geotextile for Soil Stabilization SY	Stabilizer Aggregate TONS	Class IV Aggregate Stabilization TONS
CONTINGENCY									
				TOTAL CY/TONS/SY:	0	0**	0**	0	0

*ASU(1/2) = Aggregate Subgrade (Type 1 or 2)
*AST = Aggregate Stabilization
**Total tons of "Class IV Subgrade Stabilization" and total square yards of "Geotextile for Soil Stabilization" are only the estimated quantities for ASU(1/2)/AST and may only represent a portion of the subgrade stabilization and geotextile quantities shown in the Item Sheets of the Proposal.

SUMMARY OF ROCK PLATING

LINE	Beginning Slope (H:V)	Approx. Station	Ending Slope (H:V)	Approx. Station	Location LT/RT	Rock Plating Detail No. 1/2/3/4	Riprap Class* 1/2/B	Rock Plating SY
							TOTAL SY:	0

*Use Class 1, 2 or B riprap if riprap class is not shown for rock plating location.

SUMMARY OF REINFORCED SOIL SLOPES AND SLOPE EROSION CONTROL

LINE	Beginning Slope/ RSS (H:V)	Approx. Station	Ending Slope/ RSS (H:V)	Approx. Station	Location LT/RT	Reinforced Soil Slope (RSS) SY	Geocells SY	Coir Fiber Mat SY	Matting for Erosion Control SY
					TOTAL SY:	0	0	0*	0**

*Total square yards of "Coir Fiber Mat" is only the estimated quantity for slopes steeper than 2:1 (H:V) and may only represent a portion of the coir fiber mat quantity shown in the Item Sheets of the Proposal.
**Total square yards of "Matting for Erosion Control" is only the estimated quantity for RSS and may only represent a portion of the matting quantity shown in the Item Sheets of the Proposal.

SUMMARY OF PRE-SPLITTING OF ROCK

LINE	Beginning Rock Cut Slope (H:V)	Approx. Station	Ending Rock Cut Slope (H:V)	Approx. Station	Location LT/RT	Pre-splitting of Rock SY
					TOTAL SY:	0

SUMMARY OF SURCHARGES AND SURCHARGE WAITING PERIODS

LINE	Station	Station	Surcharge Height FT	MONTHS

SUMMARY OF SETTLEMENT GAUGES

Gauge No.	LINE and Station	Offset	
		Distance FT	Direction LT/RT
	TOTAL GAUGES (EACH):		

SUMMARY OF EMBANKMENT WAITING PERIODS

LINE	Station	Station	MONTHS

SUMMARY OF BRIDGE WAITING PERIODS

Bridge Description	End Bent/ Bent No.	MONTHS

DocuSign Envelope ID: 4D2B8FF8-B651-4681-85C4-4737F72DA2A6

PROJECT REFERENCE NO.	SHEET NO.
17BP.2.R.95	04
R/W SHEET NO.	

ROADWAY DESIGN ENGINEER
NORTH CAROLINA PROFESSIONAL SEAL 027418 ENGINEER MARCUS LOWERY
2/14/2020 | 3:10 PM EST

HYDRAULICS ENGINEER
NORTH CAROLINA PROFESSIONAL SEAL 044158 ENGINEER BENJAMIN J. HERNCAR
2/14/2020 | 12:10 PM PST

DOCUMENT NOT CONSIDERED FINAL UNLESS ALL SIGNATURES COMPLETED

TGS ENGINEERS
706 HILLSBOROUGH ST. SUITE 200
RALEIGH, NC 27603
PH (919) 773-8887
CORP. LICENSE NO.: C-0275

NAD 83/2011

SKETCH SHOWING BRIDGE/PAVEMENT RELATIONSHIP (N.T.S.)

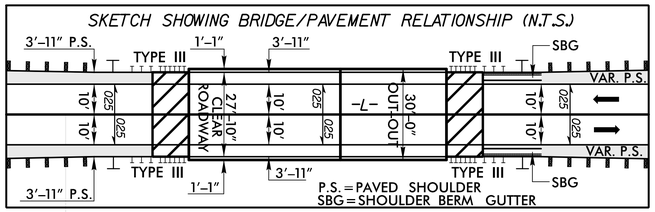

DETAIL 1
STANDARD 'V' DITCH
(Not to Scale)

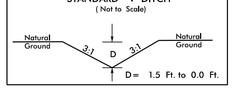

FROM -L- STA. 17+70 TO STA. 17+85 RT

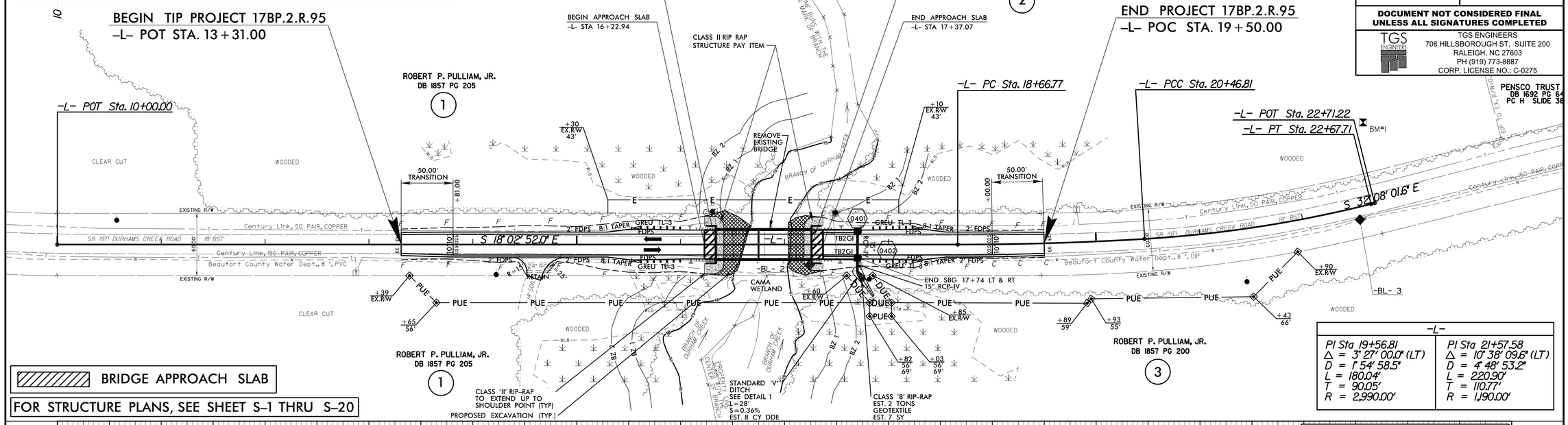

-L-	
PI Sta 19+56.81	PI Sta 21+57.58
Δ = 3° 27' 00.0" (LT)	Δ = 10° 38' 09.6" (LT)
D = 1° 54' 58.5"	D = 4° 48' 53.2"
L = 180.04'	L = 220.90'
T = 90.05'	T = 110.77'
R = 2,990.00'	R = 1,190.00'

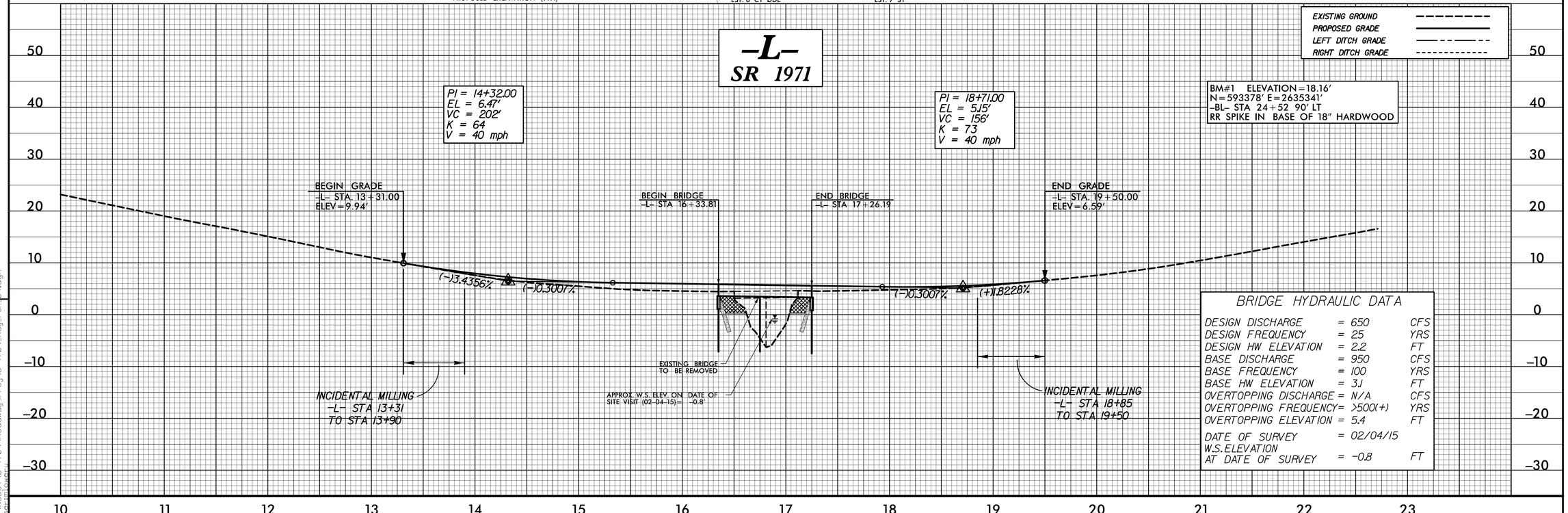

BRIDGE HYDRAULIC DATA

DESIGN DISCHARGE	= 650	CFS
DESIGN FREQUENCY	= 25	YRS
DESIGN HW ELEVATION	= 2.2	FT
BASE DISCHARGE	= 950	CFS
BASE FREQUENCY	= 100	YRS
BASE HW ELEVATION	= 3.1	FT
OVERTOPPING DISCHARGE	= N/A	CFS
OVERTOPPING FREQUENCY	= >500(+)	YRS
OVERTOPPING ELEVATION	= 5.4	FT
DATE OF SURVEY	= 02/04/15	
W.S. ELEVATION AT DATE OF SURVEY	= -0.8	FT

REVISIONS

8/17/99

2/14/2020
R:\NCDOT\B-4709\Roadway\Proj\B-4709_Rdy_Psh_04.dgn
(Benjamin Powell)

09/08/99

TIP PROJECT: 17BP.2.R295

STATE	STATE PROJECT REFERENCE NO.	SHEET NO.	TOTAL SHEETS
N.C.	17BP.2.R.95	RW01	05

STATE OF NORTH CAROLINA
DIVISION OF HIGHWAYS

SURVEY CONTROL, EXISTING CENTERLINES, RIGHT OF WAY, EASEMENTS AND PROPERTY TIES

BEAUFORT COUNTY

LOCATION: REPLACE BRIDGE NO. 14 ON SR 1932
OVER BRANCH OF DURHAM CREEK

NAD 83/2011

RW04

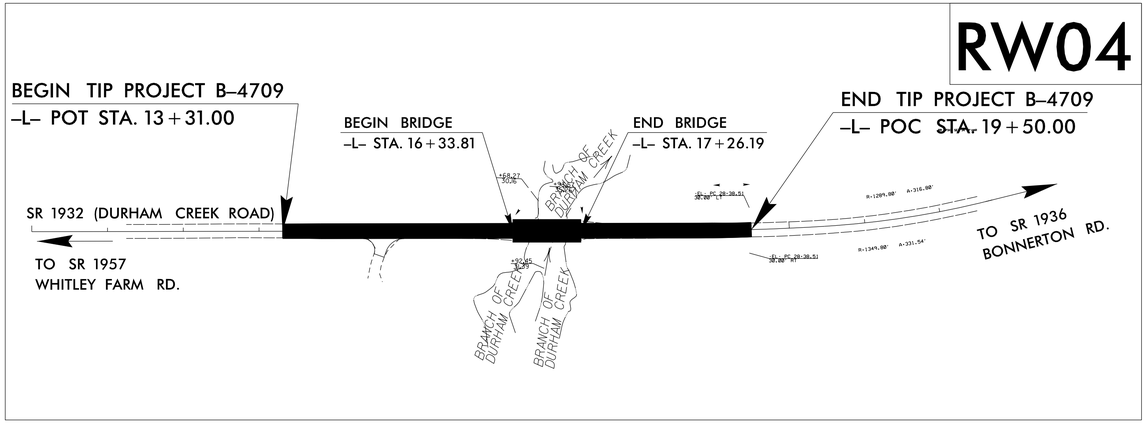

GRAPHIC SCALE

50 25 0 50 100

PLANS

DATUM DESCRIPTION

THE LOCALIZED COORDINATE SYSTEM DEVELOPED FOR THIS PROJECT IS BASED ON THE STATE PLANE COORDINATES ESTABLISHED BY NCDOT FOR MONUMENT "B4709-p6"
WITH NAD 83/NA 2011 STATE PLANE GRID COORDINATES OF
NORTHING: 597064.088(ft) EASTING: 2364979.222(ft)
ELEVATION: 5.05(ft)
THE AVERAGE COMBINED GRID FACTOR USED ON THIS PROJECT (GROUND TO GRID) IS: 0.99987931
THE N.C. LAMBERT GRID BEARING AND LOCALIZED HORIZONTAL GROUND DISTANCE FROM "B4709-p6" TO -L- STATION 13+31.00 IS
N 13-09'57" W 162.02(ft)
ALL LINEAR DIMENSIONS ARE LOCALIZED HORIZONTAL DISTANCES
VERTICAL DATUM USED IS NAVD 88

Prepared in the Office of:

DIVISION 2
LOCATION & SURVEYS

2018 STANDARD SPECIFICATIONS

RIGHT OF WAY DATE:
MAY 21, 2019

LETTING DATE:
FEBRUARY 12, 2020

PROFESSIONAL LAND SURVEYOR

NORTH CAROLINA PROFESSIONAL SEAL L-4169 LAND SURVEYOR KEITH L. HONEYCUTT

DocuSigned by:
K.L. Honeycutt
8C11B4DAEF3D4DF...
3/24/2021
SIGNATURE: ***Date:***

STATE OF NORTH CAROLINA DEPARTMENT OF TRANSPORTATION

23-MAR-2021 17:04
N:\BRIDGEJOBS\b4709\RW_Sheets\B-4709_LS_rw01.dgn
mcrhodesl AT LS-29767

PROJECT REFERENCE NO.	SHEET NO.
17BP.2.R.95	RW02C-1
Location and Surveys	
DIVISION 2 LOCATION & SURVEYS	

SURVEY CONTROL SHEET 17BP.2.R.95

W/ EXISTING CENTERLINE ALIGNMENTS PRIOR TO CONSTRUCTION

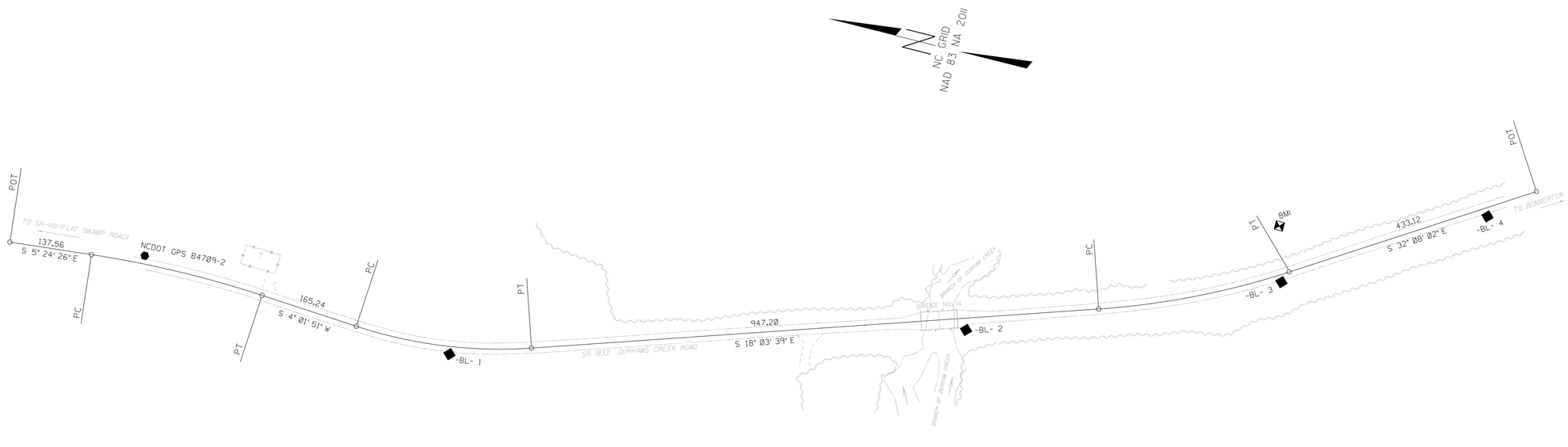

EXISTING ALIGNMENT

POINT	EL N	E	BEARING	DIST	DELTA	D	L	T	R
POT	595422.470	2634799.004							
LINE			S 05°24'25.7" E	137.56					
PC	595285.525	2634811.966							
CURVE			S 00°41'17.5" E	292.19	09°26'16.5"(RT)	03°13'35.1"	292.52	146.59	1775.84
PT	594993.356	2634815.476							
LINE			S 04°01'50.7" W	165.24					
PC	594828.528	2634803.861							
CURVE			S 07°00'53.9" E	294.16	22°05'29.3"(LT)	07°27'48.6"	295.99	149.86	767.68
PT	594536.566	2634839.787							
LINE			S 18°03'38.5" E	947.20					
PC	593636.038	2635133.441							
CURVE			S 25°05'50.1" E	323.36	14°04'23.0"(LT)	04°20'28.5"	324.17	162.91	1319.80
PT	593343.210	2635270.595							
LINE			S 32°08'01.6" E	433.12					
POT	592976.439	2635500.971							

BASELINE

BL

POINT	DESC.		NORTH	EAST	ELEVATION
GPS2	NCDOT GPS	B470	595198.9320	2634831.7390	34.33
1		BL-1	594666.7030	2634796.6160	28.75
2		BL-2	593841.8030	2635045.6470	3.84
3		BL-3	593351.6500	2635251.0720	15.58
4		BL-4	593045.4310	2635440.9610	18.91

BENCHMARK

.....

BM1 ELEVATION - 18.16
N 593378 E 2635341
RR SPIKE SET IN 18" HARDWOOD

.....

NOTES:

1. PROJECT CONTROL WAS ESTABLISHED USING GNSS, THE GLOBAL NAVIGATION SATELLITE SYSTEM.

2. THE SURVEY CONTROL DATA FOR THIS PROJECT HAS BEEN COMPILED FROM VARIOUS SOURCES. IF FURTHER INFORMATION REGARDING PROJECT CONTROL IS NEEDED, PLEASE CONTACT THE LOCATION AND SURVEYS UNIT.

6/2/99

REVISIONS

23-MAR-2021 16:57
N:\BRIDGE\TOBS\B4709\Control Sheets\B4709_LS_rw02c-1.dgn
mcrhodes1 AT LS-299767

PROPOSED ALIGNMENT CONTROL SHEET 17BP.2.R.95

PROJECT REFERENCE NO.	SHEET NO.
17BP.2.R.95	RW02D-1

Location and Surveys

DIVISION 2
LOCATION & SURVEYS

REVISIONS

6/2/99

PROPOSED ALIGNMENT

TYPE	STATION	L NORTH	EAST
POT	10+00.00	594536.5663	2634839.7868
PC	18+66.77	593712.4466	2635108.3195
PCC	20+46.81	593543.0476	2635169.2160
PT	22+67.71	593346.1828	2635268.7276
POT	22+71.22	593343.2098	2635270.5950

NOTES:

1. PROJECT CONTROL WAS ESTABLISHED USING GNSS, THE GLOBAL NAVIGATION SATELLITE SYSTEM.

2. THE PROPOSED ALIGNMENT CONTROL DATA FOR THIS PROJECT HAS BEEN COMPILED FROM VARIOUS SOURCES. IF FURTHER INFORMATINO REGARDING PROJECT CONTROL IS NEEDED, PLEASE CONTACT THE LOCATION AND SURVEYS UNIT.

23-MAR-2021706
K:\WADOT\B4709\RW Sheets\B4709_LS_rw02d-1.dgn
mcrhodes1 AT LS-293767

RIGHT OF WAY CONTROL SHEET 17BP.2.R.95

PROJECT REFERENCE NO.	SHEET NO.
17BP.2.R.95	RW03E-1

Location and Surveys

DIVISION 2
LOCATION & SURVEYS

PROJECT SURVEYOR

NORTH CAROLINA PROFESSIONAL SEAL L-4169 LAND SURVEYOR KEITH E. HONEYCUTT

DocuSigned by: K.E. Honeycutt 8C11B4DAEF3D4DF... 3/24/2021

DOCUMENT NOT CONSIDERED FINAL UNLESS ALL SIGNATURES COMPLETED

I, Keith E. Honeycutt, a Professional Land Surveyor in the state of North Carolina hereby certify to the best of my knowledge and belief that the following work item(s) (Base map Compilation, R/W Staking) performed under my responsible charge meet NCDOT Survey Standards as directed in the NCDOT Location & Surveys guidelines and procedures.

I further certify that the data compiled came from available surveys/mapping performed by others and provided to me by NCDOT and do not certify to the accuracy or quality of the individual data sources.

I further certify that the right of way and permanent easement points shown herein and outlined in the tables shown hereon (localized coordinates, station/offset) have been checked and are accurate representations of the right of way and permanent easement points depicted on the corresponding highway plans. I also certify that the right of way and permanent easement points shown herein have been field monumented under my supervision from existing survey control provided by others; that the depicted property data shown herein were surveyed by others; and these monuments denote the right of way and easement boundaries at the time of staking which may be subject to change due to right of way revisions (See deeds for final determination).

Witness my original signature, registration number and seal this 24th day of March, 2021.

DocuSigned by: K.E. Honeycutt
8C11B4DAEF3D4DF...

Professional Land Surveyor — PLS # L-4169

RW & EASEMENT POINTS

ROW MARKER PERMANENT EASEMENT-E

ALIGN	STATION	OFFSET	NORTH	EAST	
L	13+39.00	29.92	594204.9750	2634916.3612	
L	13+65.00	56.00	594172.1755	2634899.6227	
L	17+60.00	29.83	593804.7182	2635046.8815	
L	17+82.00	69.00	593771.6650	2635016.4531	
L	17+82.00	56.00	593775.6925	2635028.8135	
L	17+85.00	29.82	593780.9500	2635054.6321	STAKE SET
L	18+03.00	69.00	593751.6982	2635022.9591	
L	18+03.00	56.00	593755.7257	2635035.3195	
L	19+89.00	59.00	593576.4767	2635093.2504	
L	19+93.00	55.00	593574.0529	2635098.4216	
L	21+43.00	66.00	593426.0001	2635148.7902	
L	21+90.00	30.04	593399.0060	2635203.1465	

NOTES:

1. IF FURTHER INFORMATION REGARDING PROJECT CONTROL IS NEEDED, PLEASE CONTACT THE LOCATION AND SURVEYS UNIT.

2. PROJECT CONTROL WAS ESTABLISHED USING GNSS, THE GLOBAL NAVIGATION SATELLITE SYSTEM.

REVISIONS

6/2/99

23-MAR-2021 9:38
K:\WADE\DOT\B4709\RW Sheets\B4709_LS_rw03e-1.dgn
mcrhodes1 AT LS-249767

6/2/99

REVISIONS

PROJECT REFERENCE NO.	SHEET NO.
17BP.2.R.95	RW04

Location and Surveys

DIVISION 2
LOCATION & SURVEYS

I, Keith E. Honeycutt, a Professional Land Surveyor in the state of North Carolina hereby certify to the best of my knowledge and belief that the following work item(s) (Base map Compilation, R/W Staking) performed under my responsible charge meet NCDOT Survey Standards as directed in the NCDOT Location & Surveys guidelines and procedures.

I further certify that the data compiled came from available surveys/mapping performed by others and provided to me by NCDOT and do not certify to the accuracy or quality of the individual data sources.

I further certify that the right of way and permanent easement points shown herein and outlined in the tables shown hereon (localized coordinates, station/offset) have been checked and are accurate representations of the right of way and permanent easement points depicted on the corresponding highway plans. I also certify that the right of way and permanent easement points shown herein have been field monumented under my supervision from existing survey control provided by others; that the depicted property data shown herein were surveyed by others; and these monuments denote the right of way and easement boundaries at the time of staking which may be subject to change due to right of way revisions (See deeds for final determination).

Witness my original signature, registration number and seal this 24th day of March, 2021.

DocuSigned by:
K.E. Honeycutt
8C11B4DAEF3D4DF...

Professional Land Surveyor — L-4169 PLS #

PROJECT SURVEYOR

NORTH CAROLINA PROFESSIONAL SEAL L-4169 LAND SURVEYOR KEITH E. HONEYCUTT

DocuSigned by:
K.E. Honeycutt
8C11B4DAEF3D4DF...
3/24/2021

DOCUMENT NOT CONSIDERED FINAL UNLESS ALL SIGNATURES COMPLETED

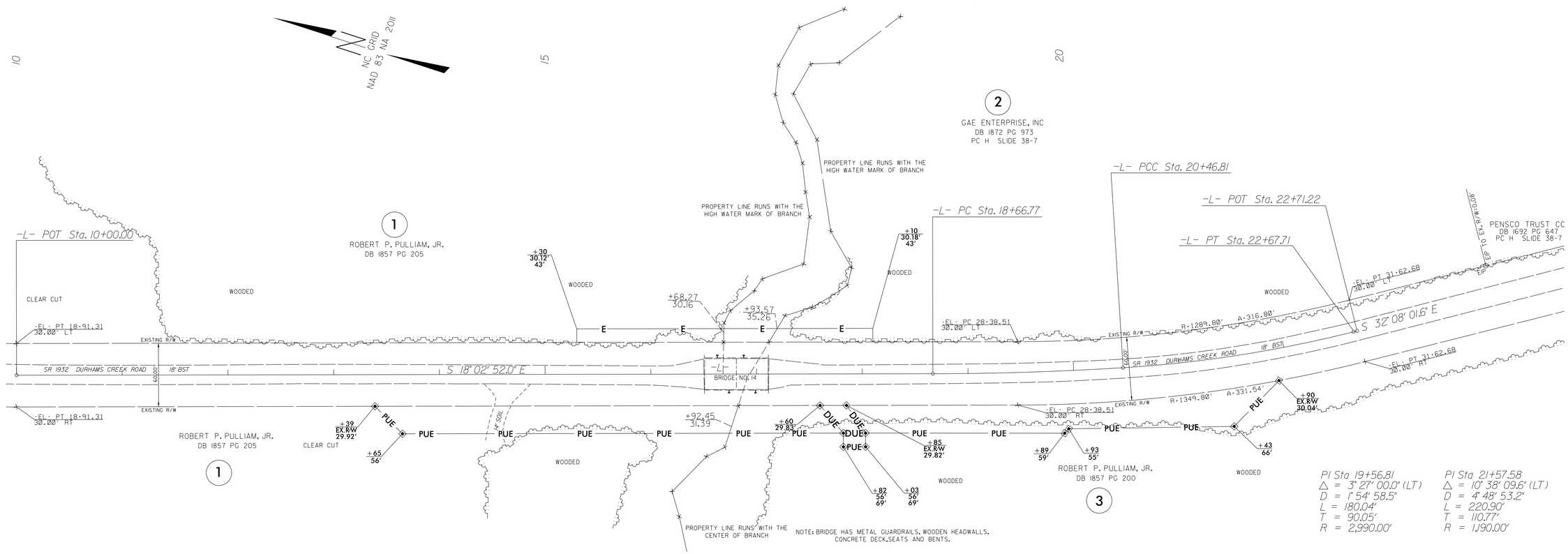

NOTES:

1. IF FURTHER INFORMATION REGARDING PROJECT CONTROL IS NEEDED, PLEASE CONTACT THE LOCATION AND SURVEYS UNIT.

2. PROJECT CONTROL WAS ESTABLISHED USING GNSS, THE GLOBAL NAVIGATION SATELLITE SYSTEM.

$$$$SYSTIME$$$$
$$$$DGN$$$$
$$$$USERNAME$$$$

DocuSign Envelope ID: 4D2B8FF8-B651-4681-85C4-4737F72DA2A6

STATE OF NORTH CAROLINA
DIVISION OF HIGHWAYS

TRANSPORTATION MANAGEMENT PLAN

BEAUFORT COUNTY BRIDGE #060014

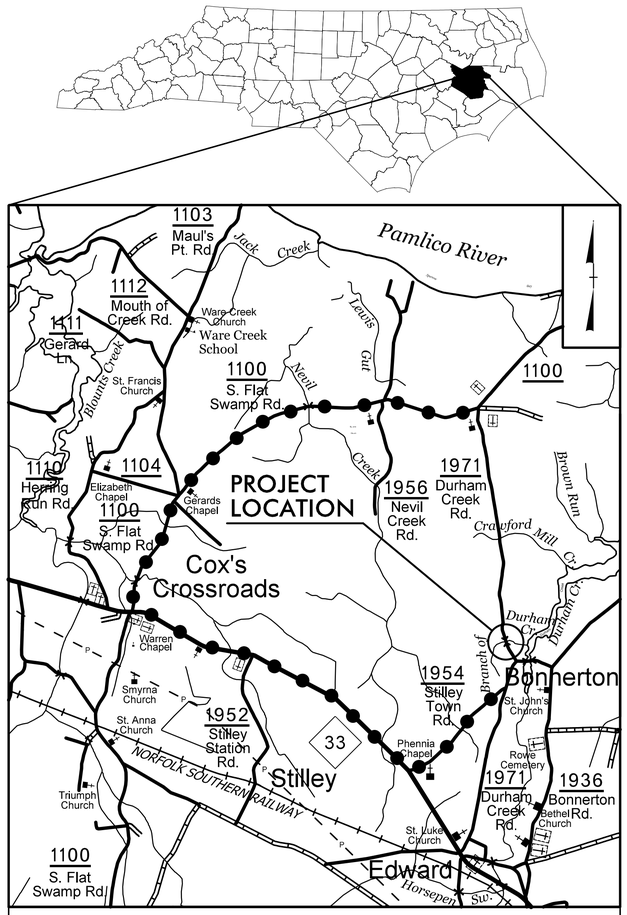

VICINITY MAP
● ● ● ● ● OFFSITE DETOUR

NCDOT CONTACT INFORMATION:
Phone: 252 439 2812 Fax: 252 830 3352
MICHAEL C. AMAN, PE
Division 2 Bridge Program Manager

WORK ZONE SAFETY & MOBILITY
"from the MOUNTAINS to the COAST"

PLAN PREPARED FOR N.C.D.O.T. BY:

TGS ENGINEERS
706 HILLSBOROUGH ST.
SUITE 200
RALEIGH, NC 27603
PH (919) 773-8887
CORP. LICENSE NO. : C-0275

V. MARCUS LOWERY, PE *PROJECT ENGINEER*
PAUL SCHULKEN, PE *DESIGN ENGINEER*

DIVISION OF HIGHWAYS
STATE OF NORTH CAROLINA
DEPARTMENT OF TRANSPORTATION
WORK ZONE TRAFFIC CONTROL

INDEX OF SHEETS

SHEET NO.	TITLE
TMP-1	TITLE SHEET, VICINITY MAP, INDEX OF SHEETS, LIST OF APPLICABLE ROADWAY STANDARD DRAWINGS, AND LEGEND
TMP-2	PHASING, GENERAL NOTES, AND DETOUR
TMP-3	GENERAL NOTES AND PHASING PLAN

ROADWAY STANDARD DRAWINGS

THE FOLLOWING ROADWAY STANDARDS AS SHOWN IN "ROADWAY STANDARD DRAWINGS" - PROJECT SERVICES UNIT - N.C. DEPARTMENT OF TRANSPORTATION - RALEIGH, N.C., DATED JANUARY 2018 ARE APPLICABLE TO THIS PROJECT AND BY REFERENCE HEREBY ARE CONSIDERED A PART OF THESE PLANS:

STD. NO.	TITLE
1101.01	WORK ZONE ADVANCE WARNING SIGNS
1101.03	TEMPORARY ROAD CLOSURES
1101.11	TRAFFIC CONTROL DESIGN TABLES
1110.01	STATIONARY WORK ZONE SIGNS
1110.02	PORTABLE WORK ZONE SIGNS
1145.01	BARRICADES
1165.01	WORK VEHICLE LIGHTING SYSTEMS AND TMA DELINEATION
1261.01	GUARDRAIL AND BARRIER DELINEATORS - INSTALLATION SPACING
1261.02	GUARDRAIL AND BARRIER DELINEATORS - TYPES AND MOUNTING
1262.01	GUARDRAIL END DELINEATION

LEGEND

GENERAL

- DIRECTION OF TRAFFIC FLOW
- DIRECTION OF PEDESTRIAN TRAFFIC FLOW
- EXIST. PVMT.
- NORTH ARROW
- PROPOSED PVMT.
- TEMP. SHORING (LOCATION PURPOSES ONLY)
- WORK AREA

PAVEMENT MARKINGS

- EXISTING LINES
- TEMPORARY LINES

TRAFFIC CONTROL DEVICES

- BARRICADE (TYPE III)

TEMPORARY SIGNING

- PORTABLE SIGN
- STATIONARY SIGN
- STATIONARY OR PORTABLE SIGN

DOCUMENT NOT CONSIDERED FINAL UNLESS ALL SIGNATURES COMPLETED

APPROVED: _____

DATE: 2/14/2020 | 3:10 PM EST

SEAL

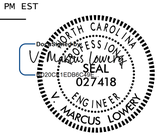

SHEET NO.
TMP-1

PROJECT: 17BP.2.R.95

2/14/2020
X:\NCDOT\B-4709\Traffic\TrafficControl\TCP\b4709_TC_TMP_01(TSH).dgn
User:mlowery

DocuSign Envelope ID: 4D2B8FF8-B651-4681-85C4-4737F72DA2A6

PROJ. REFERENCE NO.	SHEET NO.
17BP.2.R.95	TMP-2

TGS ENGINEERS
706 HILLSBOROUGH ST.
SUITE 200
RALEIGH, NC 27603
PH (919) 773-8887
CORP. LICENSE NO. : C-0275

GENERAL NOTES

CHANGES MAY BE REQUIRED WHEN PHYSICAL DIMENSIONS IN THE DETAIL DRAWINGS, STANDARD DETAILS, AND ROADWAY DETAILS ARE NOT ATTAINABLE TO MEET FIELD CONDITIONS OR RESULT IN DUPLICATE OR UNDESIRED OVERLAPPING OF DEVICES. MODIFICATION MAY INCLUDE: MOVING, SUPPLEMENTING, COVERING, OR REMOVAL OF DEVICES AS DIRECTED BY THE ENGINEER.

THE FOLLOWING GENERAL NOTES APPLY AT ALL TIMES FOR THE DURATION OF THE CONSTRUCTION PROJECT EXCEPT WHEN OTHERWISE NOTED IN THE PLAN OR DIRECTED BY THE ENGINEER.

LANE AND SHOULDER CLOSURE REQUIREMENTS

A) REMOVE LANE CLOSURE DEVICES FROM THE LANE WHEN WORK IS NOT BEING PERFORMED BEHIND THE LANE CLOSURE OR WHEN A LANE CLOSURE IS NO LONGER NEEDED OR AS DIRECTED BY THE ENGINEER.

TRAFFIC PATTERN ALTERATIONS

B) NOTIFY THE ENGINEER TWENTY ONE (21) CALENDAR DAYS PRIOR TO ANY TRAFFIC PATTERN ALTERATION.

SIGNING

C) INSTALL ADVANCE WORK ZONE WARNING SIGNS WHEN WORK IS WITHIN 40 FT FROM THE EDGE OF TRAVEL LANE AND NO MORE THAN THREE (3) DAYS PRIOR TO THE BEGINNING OF CONSTRUCTION.

D) PROVIDE SIGNING AND DEVICES REQUIRED TO CLOSE THE ROAD ACCORDING TO THE ROADWAY STANDARD DRAWINGS AND TRAFFIC CONTROL PLANS.

PROVIDE SIGNING REQUIRED FOR THE OFF-SITE DETOUR ROUTE AS SHOWN IN THE TRAFFIC CONTROL PLANS.

E) COVER OR REMOVE ALL SIGNS AND DEVICES REQUIRED TO CLOSE THE ROAD WHEN ROAD CLOSURE IS NOT IN OPERATION.

COVER OR REMOVE ALL SIGNS REQUIRED FOR THE OFF-SITE DETOUR WHEN THE DETOUR IS NOT IN OPERATION.

F) ENSURE ALL NECESSARY SIGNING IS IN PLACE PRIOR TO ALTERING ANY TRAFFIC PATTERN.

TRAFFIC CONTROL DEVICES

G) PLACE TYPE III BARRICADES, WITH "ROAD CLOSED" SIGN R11-2 ATTACHED, OF SUFFICIENT LENGTH TO CLOSE ENTIRE ROADWAY.

PAVEMENT MARKINGS AND MARKERS

H) INSTALL PAVEMENT MARKINGS ON THE FINAL SURFACE AS FOLLOWS:

ROAD NAME	MARKING	MARKERS
SR 1971 (DURHAM CREEK RD)	THERMOPLASTIC	RAISED

I) TIE PROPOSED PAVEMENT MARKING LINES TO EXISTING PAVEMENT MARKING LINES.

J) REMOVE ANY CONFLICTING MARKINGS OR MARKERS BEFORE SHIFTING TRAFFIC TO A NEW PATTERN.

K) PASSING ZONE WILL BE DETERMINED IN THE FIELD AND MUST BE APPROVED BY THE ENGINEER.

L) STATE FORCES WILL INSTALL AND MAINTAIN THE PROJECT DETOUR AND TYPE III BARRICADES AT THE PROJECT LIMITS. STATE FORCES WILL INSTALL MARKINGS AND MARKERS ON THE FINISHED PROJECT. CONTACT JEFF DUNNING AT 252-439-2950 TWO WEEKS PRIOR TO CLOSING THE ROAD FOR DETOUR INSTALLATION.

PHASING

STEP 1: INSTALL ALL DETOUR ROUTE SIGNS USING RSD 1101.01 AND AS SHOWN.

STEP 2: INSTALL TYPE III BARRICADES AND SIGNS, AND CLOSE SR 1971 (DURHAM CREEK RD) TO TRAFFIC USING RSD 1101.03 (SHEET 1 OF 9) AND AS SHOWN.

PLACE TRAFFIC ON DETOUR.

STEP 3: DEMOLISH AND REMOVE THE EXISTING BRIDGE OVER DURHAM CREEK.

CONSTRUCT THE NEW BRIDGE OVER DURHAM CREEK FROM -L- STA. 16+33.81 TO 17+26.19.

CONSTRUCT THE ROADWAY ON SR 1971 (DURHAM CREEK RD) FROM -L- STA. 13+31.00 TO -L- STA. 16+33.81 (BEGIN BRIDGE) AND FROM -L- STA. 17+26.19 (END BRIDGE) TO 19+50.00 UP TO AND INCLUDING THE FINAL LAYER OF SURFACE COURSE.

STEP 4: UPON COMPLETION OF BRIDGE, APPROACHES, AND ROADWAY, PLACE FINAL PAVEMENT MARKINGS AND MARKERS IN ACCORDANCE WITH RSD 1205.01, 1205.02, 1205.12, 1250.01, AND 1251.01. REMOVE BARRICADES, SIGNS, AND ALL OTHER TRAFFIC CONTROL DEVICES AND OPEN SR 1971 (DURHAM CREEK RD) TO TRAFFIC IN FINAL PATTERN.

R11-2
48" x 30"

TYPE III BARRICADE

A

M4-8
24" x 12"

M6-1
21" x 15"

1

R11-4
60" x 30"

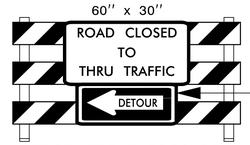

M4-10L
48" x 18"

TYPE III BARRICADE

B

M4-8
24" x 12"

M6-1
21" x 15"

2

R11-4
60" x 30"

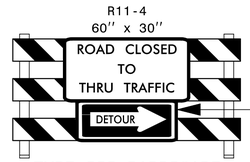

M4-10R
48" x 18"

TYPE III BARRICADE

C

M4-8
24" x 12"

M6-1
21" x 15"

3

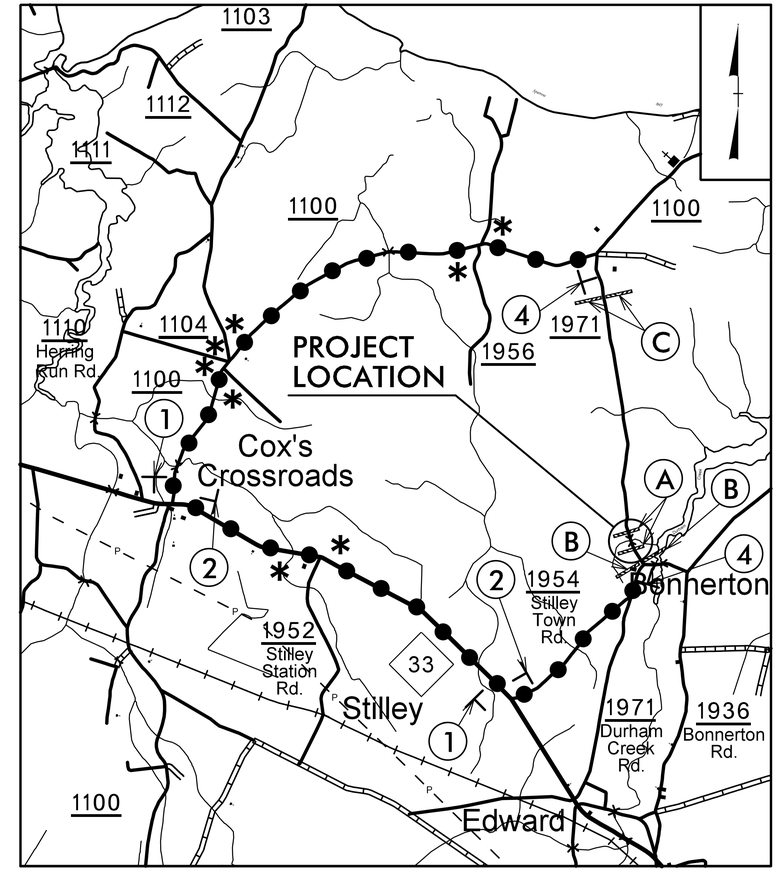

M4-8 A
48" x 18"

4

* PLACE SIGN 3 ON RT SHOULDER FACING TRAFFIC

ESTIMATED ADDITIONAL SIGNS REQUIRED PER RSD 1101.03:
- W20-3 (12 EACH)
- SP-4 (4 EACH)

SEE RSD FOR SIGN PLACEMENT AND SIGN WORDING REQUIREMENTS.

APPROVED: _____

DATE: 2/14/2020 | 3:10 PM EST

SEAL

NORTH CAROLINA PROFESSIONAL SEAL 027418 ENGINEER MARCUS LOWERY

DOCUSIGNED BY: Marcus Lowery

DOCUMENT NOT CONSIDERED FINAL UNLESS ALL SIGNATURES COMPLETED

DIVISION OF HIGHWAYS · STATE OF NORTH CAROLINA · DEPARTMENT OF TRANSPORTATION · WORK ZONE TRAFFIC CONTROL

GENERAL NOTES, PHASING, AND DETOUR

2/14/2020
X:\NCDOT\B-4709\Traffic\TrafficControl\TCP\b4709_TC_TMP_02.dgn
User:mlowery

DocuSign Envelope ID: 4D2B8FF8-B651-4681-85C4-4737F72DA2A6

PROJ. REFERENCE NO.	SHEET NO.
17BP.2.R.95	TMP-3

TGS ENGINEERS
706 HILLSBOROUGH ST.
SUITE 200
RALEIGH, NC 27603
PH (919) 773-8887
CORP. LICENSE NO. : C-0275

NAD 83/2011

GENERAL NOTES

IMPLEMENT TRAFFIC CONTROL IN ACCORDANCE WITH THE ROADWAY STANDARD DRAWINGS LISTED ON TMP-1.

CHANGES MAY BE REQUIRED WHEN PHYSICAL DIMENSIONS IN THE DETAIL DRAWINGS, STANDARD DETAILS, AND ROADWAY DETAILS ARE NOT ATTAINABLE TO MEET FIELD CONDITIONS OR RESULT IN DUPLICATE OR UNDESIRED OVERLAPPING OF DEVICES. MODIFICATION MAY INCLUDE: MOVING, SUPPLEMENTING, COVERING, OR REMOVAL OF DEVICES AS DIRECTED BY THE ENGINEER.

STATE FORCES WILL INSTALL AND MAINTAIN THE PROJECT DETOUR AND THE TYPE III BARRICADES AT THE PROJECT LIMITS. STATE FORCES WILL INSTALL PAINT AND MARKERS ON THE FINISHED PROJECT. CONTACT JEFF DUNNING AT 252-439-2950 TWO WEEKS PRIOR TO CLOSING THE ROAD FOR THE DETOUR INSTALLATION.

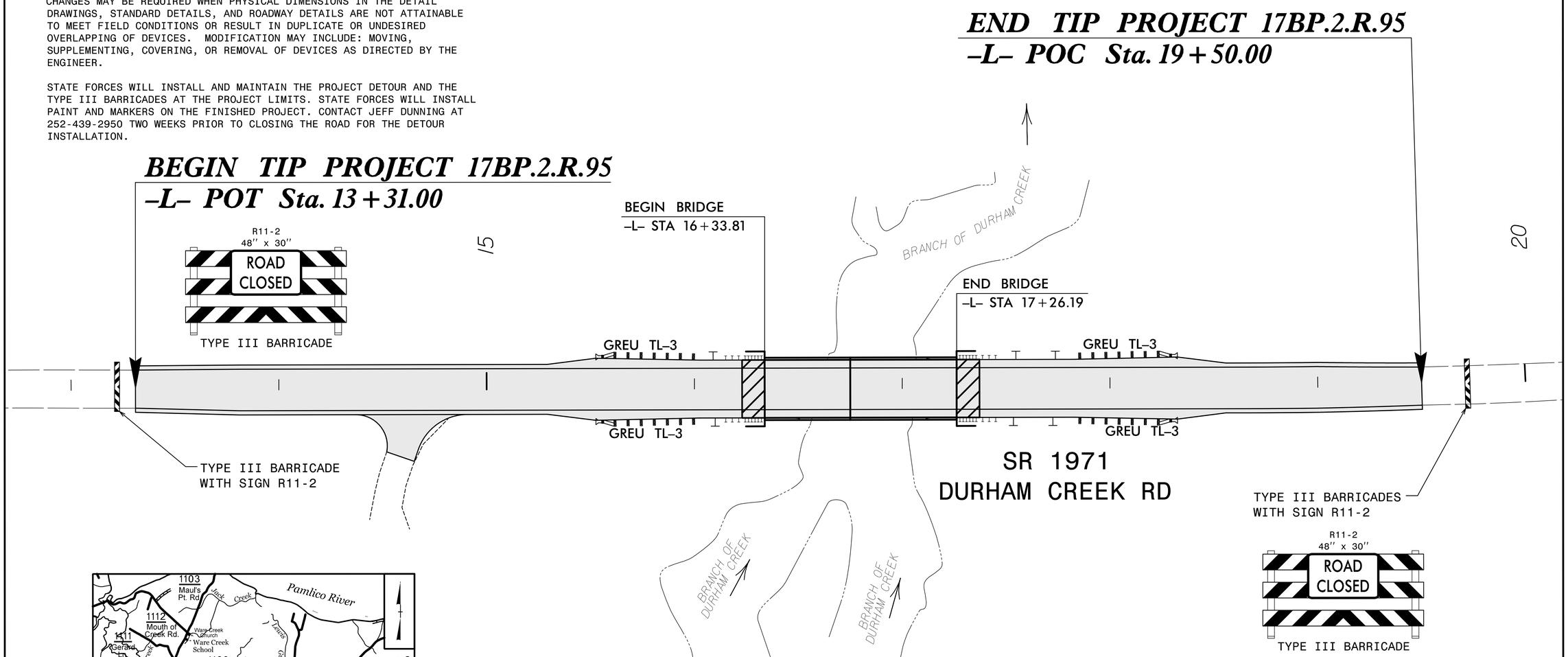

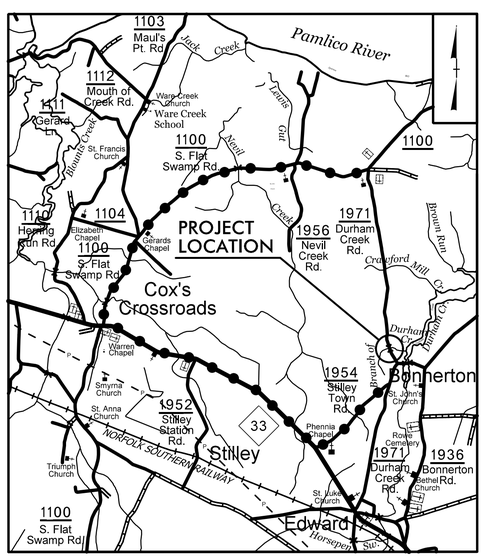

APPROVED: _____

DATE: 2/14/2020 | 3:10 PM EST

SEAL

NORTH CAROLINA PROFESSIONAL SEAL 027418 ENGINEER V. MARCUS LOWERY

DOCUSIGNED BY: V. Marcus Lowery

DOCUMENT NOT CONSIDERED FINAL UNLESS ALL SIGNATURES COMPLETED

DIVISION OF HIGHWAYS · STATE OF NORTH CAROLINA · DEPARTMENT OF TRANSPORTATION · WORK ZONE TRAFFIC CONTROL

GENERAL NOTES AND PHASING PLAN

2/14/2020
X:\NCDOT\B-4709\Traffic\TrafficControl\TCP\b4709_TC_TMP_03.dgn
User:mlowery

STATE PROJECT: 17BP.2.R.95

STATE	STATE PROJECT REFERENCE NO.	SHEET NO.	TOTAL SHEETS
N.C.	17BP.2.R.95	EC-1	

STATE PROJ. NO.	F. A. PROJ. NO.	DESCRIPTION

See Sheet 1A For Index of Sheets
See Sheet 1B For Conventional Symbols
See Sheet RW02C-1 For Survey Control Sheet

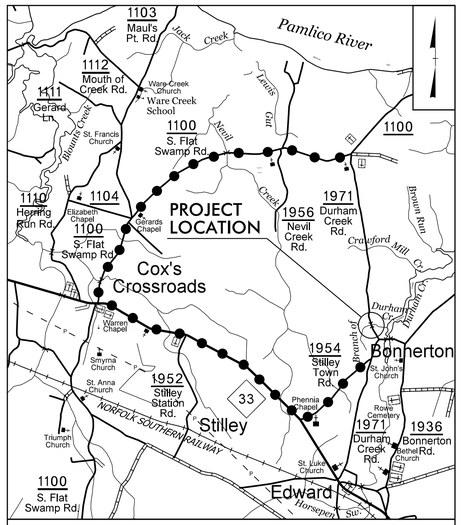

VICINITY MAP
OFFSITE DETOUR

STATE OF NORTH CAROLINA
DIVISION OF HIGHWAYS

PLAN FOR PROPOSED
HIGHWAY EROSION CONTROL

BEAUFORT COUNTY

LOCATION: REPLACE BRIDGE NO. 14 ON SR 1971 OVER BRANCH OF DURHAM CREEK

TYPE OF WORK: GRADING, DRAINAGE, STRUCTURE AND PAVING

NAD 83/2011

4

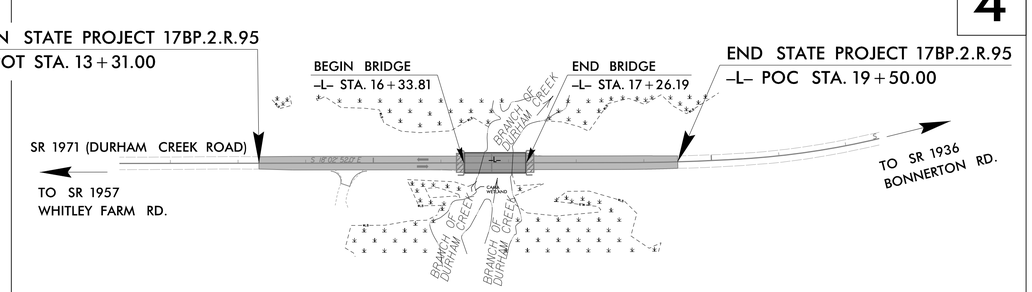

EROSION AND SEDIMENT CONTROL MEASURES

Std. #	Description	Symbol
1630.03	Temporary Silt Ditch	TSD
1630.05	Temporary Diversion	TD
1605.01	Temporary Silt Fence	
1606.01	Special Sediment Control Fence	
1622.01	Temporary Berms and Slope Drains	
1630.02	Silt Basin Type B	
1633.01	Temporary Rock Silt Check Type-A	
	Temporary Rock Silt Check Type-A with Matting and Polyacrylamide (PAM)	
1633.02	Temporary Rock Silt Check Type-B	
	Wattle / Coir Fiber Wattle	EW CFW
	Wattle / Coir Fiber Wattle with Polyacrylamide (PAM)	
1634.01	Temporary Rock Sediment Dam Type-A	
1634.02	Temporary Rock Sediment Dam Type-B	
1635.01	Rock Pipe Inlet Sediment Trap Type-A	
1635.02	Rock Pipe Inlet Sediment Trap Type-B	
1630.04	Stilling Basin	
1630.06	Special Stilling Basin	
	Rock Inlet Sediment Trap:	
1632.01	Type A	A
1632.02	Type B	B
1632.03	Type C	C
	Skimmer Basin	
	Tiered Skimmer Basin	
	Infiltration Basin	

THIS PROJECT CONTAINS EROSION CONTROL PLANS FOR CLEARING AND GRUBBING PHASE OF CONSTRUCTION.

ENVIRONMENTALLY SENSITIVE AREA(S) EXIST ON THIS PROJECT

Refer To E. C. Special Provisions for Special Considerations.

THIS PROJECT HAS BEEN DESIGNED TO SENSITIVE WATERSHED STANDARDS.

GRAPHIC SCALE

0 50

PLANS

THESE EROSION AND SEDIMENT CONTROL PLANS COMPLY WITH THE REGULATIONS SET FORTH BY THE NCG-010000 GENERAL CONSTRUCTION PERMIT EFFECTIVE APRIL 1, 2019 AND ISSUED BY THE NORTH CAROLINA DEPARTMENT OF ENVIRONMENT AND NATURAL RESOURCES DIVISION OF WATER RESOURCES.

Prepared in the Office of:

TGS ENGINEERS

TGS ENGINEERS
706 HILLSBOROUGH ST.
SUITE 200
RALEIGH, NC 27603

PH (919) 733-8887
CORP. LICENSE NO.: C-0275

Designed by:

BRIANA JAMES, EI — NAME
4041 — LEVEL III CERTIFICATION NO.

Reviewed in the Office of:

ROADSIDE ENVIRONMENTAL UNIT
1 South Wilmington St.
Raleigh, NC 27611

2018 STANDARD SPECIFICATIONS

Reviewed by:

ANDY BLANKENSHIP, PE, CPESC

Roadway Standard Drawings

The following roadway english standards as appear in "Roadway Standard Drawings"– Roadway Design Unit – N. C. Department of Transportation – Raleigh, N. C., dated January 2018 and the latest revison thereto are applicable to this project and by reference hereby are considered a part of these plans.

1604.01	Railroad Erosion Control Detail	1632.01	Rock Inlet Sediment Trap Type A
1605.01	Temporary Silt Fence	1632.02	Rock Inlet Sediment Trap Type B
1606.01	Special Sediment Control Fence	1632.03	Rock Inlet Sediment Trap Type C
1607.01	Gravel Construction Entrance	1633.01	Temporary Rock Silt Check Type A
1622.01	Temporary Berms and Slope Drains	1633.02	Temporary Rock Silt Check Type B
1630.01	Riser Basin	1634.01	Temporary Rock Sediment Dam Type A
1630.02	Silt Basin Type B	1634.02	Temporary Rock Sediment Dam Type B
1630.03	Temporary Silt Ditch	1635.01	Rock Pipe Inlet Sediment Trap Type A
1630.04	Stilling Basin	1635.02	Rock Pipe Inlet Sediment Trap Type B
1630.05	Temporary Diversion	1640.01	Coir Fiber Baffle
1630.06	Special Stilling Basin	1645.01	Temporary Stream Crossing
1631.01	Matting Installation		

Projects\NCDOT\17BP.2.R.95\Drainage\Erosion Control\B-4789_EC_tsh.dgn
User:bhenegar

PROJECT REFERENCE NO.	SHEET NO.
17BP.2.R.95	EC-2A
R/W SHEET NO.	
ROADWAY DESIGN ENGINEER	HYDRAULICS ENGINEER

COIR FIBER WATTLE BARRIER DETAIL

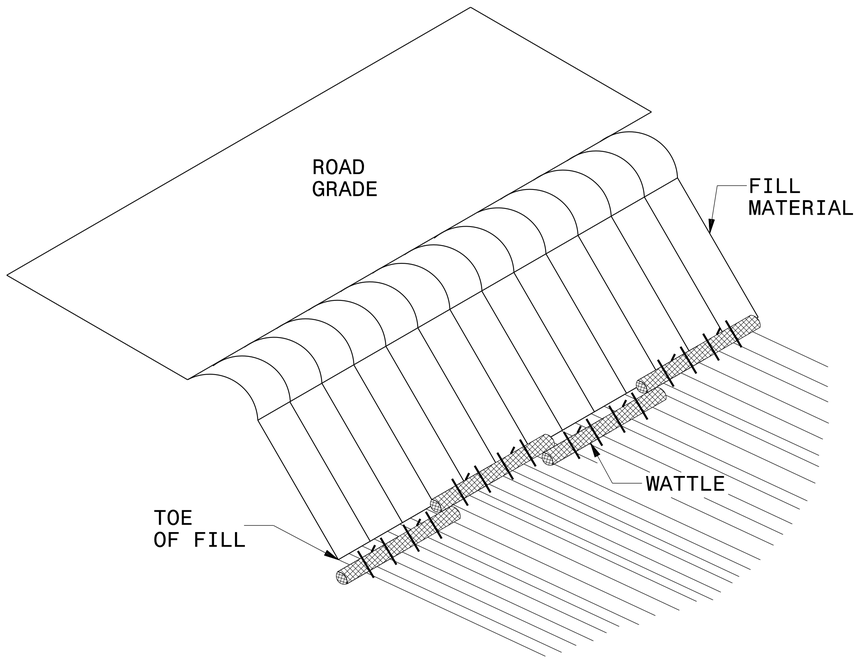

ISOMETRIC VIEW

NOTES:

USE MINIMUM 18 IN. NOMINAL DIAMETER COIR FIBER (COCONUT) WATTLE AND LENGTH OF 10 FT.

EXCAVATE A 2 TO 3 INCH TRENCH FOR WATTLE TO BE PLACED.

DO NOT PLACE WATTLES ON TOE OF SLOPE.

USE 2 FT. WOODEN STAKES WITH A 2 IN. BY 2 IN. NOMINAL CROSS SECTION.

INSTALL A MINIMUM OF 2 UPSLOPE STAKES AND 4 DOWNSLOPE STAKES AT AN ANGLE TO WEDGE WATTLE TO GROUND.

PROVIDE STAPLES MADE OF 0.125 IN. DIAMETER STEEL WIRE FORMED INTO A U SHAPE NOT LESS THAN 12″ IN LENGTH.

INSTALL STAPLES APPROXIMATELY EVERY 1 LINEAR FOOT ON BOTH SIDES OF WATTLE AND AT EACH END TO SECURE IT TO THE SOIL.

FOR BREAKS ALONG LARGE SLOPES, USE MAXIMUM SPACING OF 25 FT.

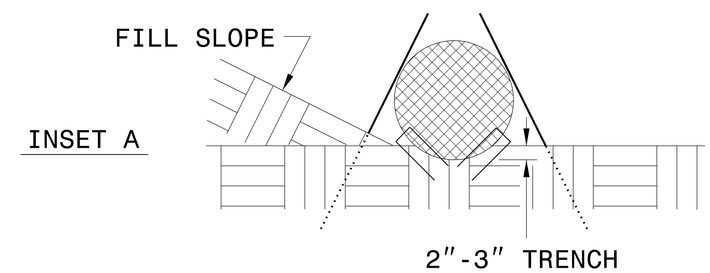

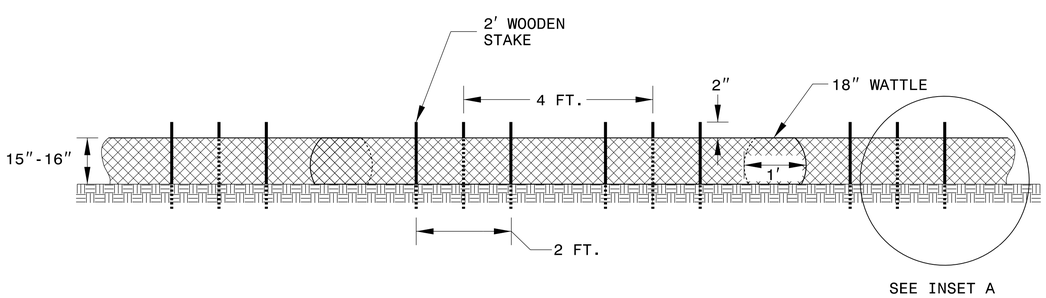

FRONT VIEW

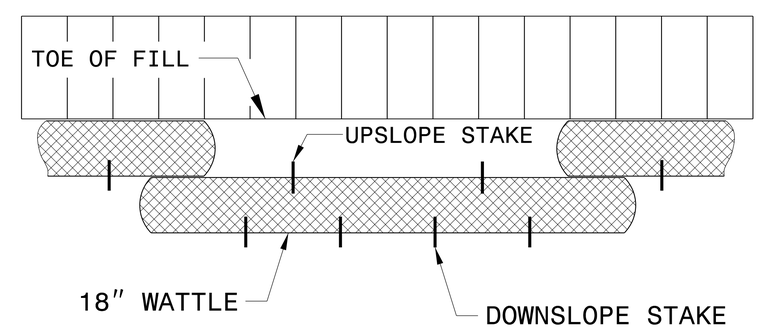

TOP VIEW

PROJECT REFERENCE NO.	SHEET NO.
17BP.2.R.95	EC-2B
R/W SHEET NO.	
ROADWAY DESIGN ENGINEER	HYDRAULICS ENGINEER

SILT FENCE COIR FIBER WATTLE BREAK DETAIL

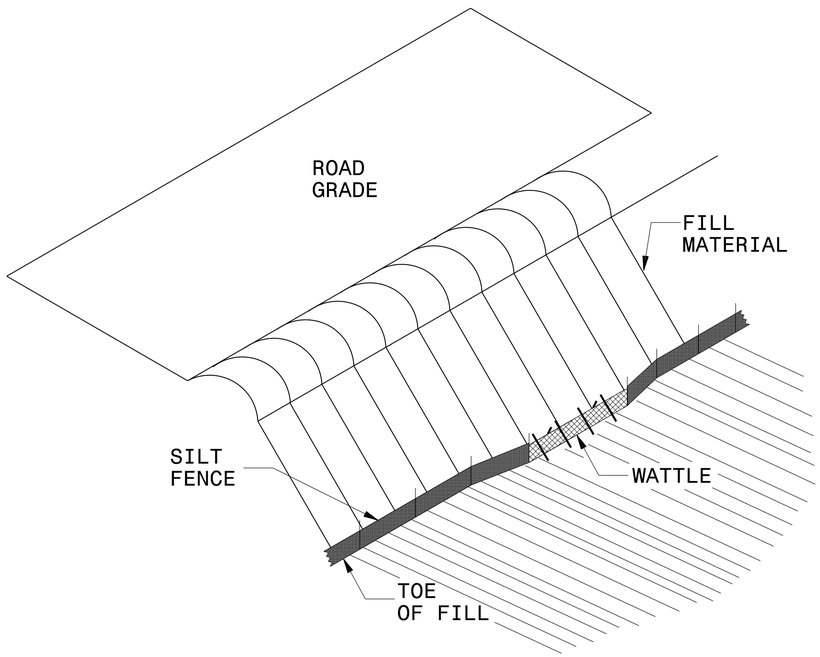

ISOMETRIC VIEW

NOTES:

USE MINIMUM 12 IN. DIAMETER COIR FIBER (COCONUT FIBER) WATTLE AND LENGTH OF 10 FT.

EXCAVATE A 1 TO 2 INCH TRENCH FOR WATTLE TO BE PLACED.

DO NOT PLACE WATTLE ON TOE OF SLOPE.

USE 2 FT. WOODEN STAKES WITH A 2 IN. BY 2 IN. NOMINAL CROSS SECTION.

INSTALL A MINIMUM OF 2 UPSLOPE STAKES AND 4 DOWNSLOPE STAKES AT AN ANGLE TO WEDGE WATTLE TO GROUND.

PROVIDE STAPLES MADE OF 0.125 IN. DIAMETER STEEL WIRE FORMED INTO A U SHAPE NOT LESS THAN 12″ IN LENGTH.

INSTALL STAPLES APPROXIMATELY EVERY 1 LINEAR FOOT ON BOTH SIDES OF WATTLE AND AT EACH END TO SECURE IT TO THE SOIL.

WATTLE INSTALLATION CAN BE ON OUTSIDE OF THE SILT FENCE AS DIRECTED.

INSTALL TEMPORARY SILT FENCE IN ACCORDANCE WITH SECTION 1605 OF THE STANDARD SPECIFICATIONS.

INSET A

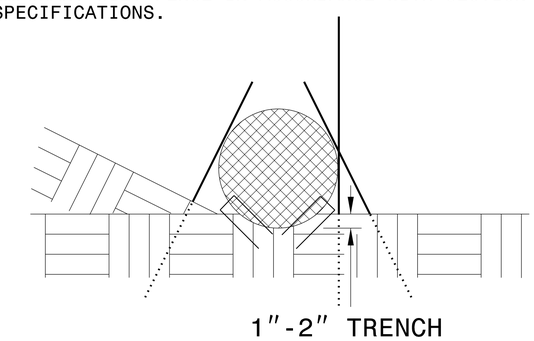

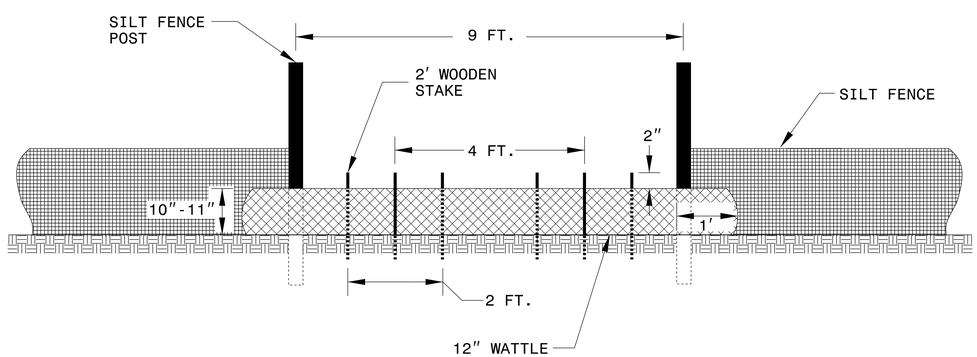

VIEW FROM SLOPE

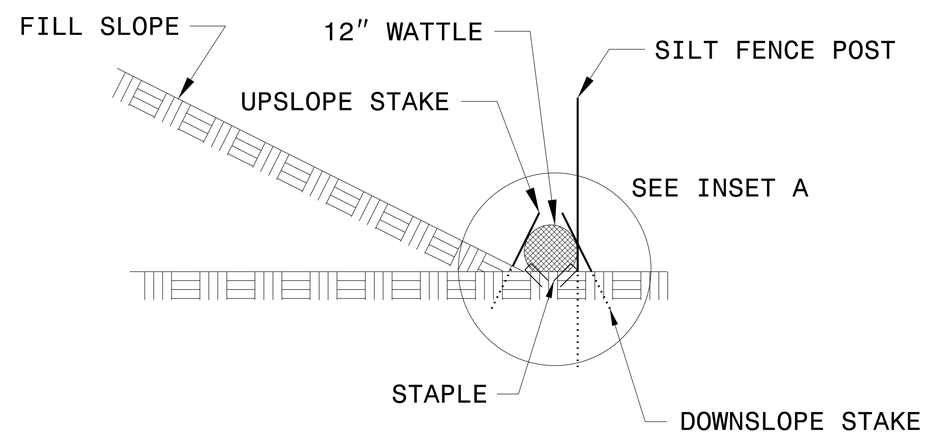

SIDE VIEW

PROJECT REFERENCE NO.	SHEET NO.
17BP.2.R.95	EC-3
ROADWAY DESIGN ENGINEER	HYDRAULICS ENGINEER

DIVISION OF HIGHWAYS
STATE OF NORTH CAROLINA

SOIL STABILIZATION TIMEFRAMES

SITE DESCRIPTION	STABILIZATION TIME	TIMEFRAME EXCEPTIONS
PERIMETER DIKES, SWALES, DITCHES AND SLOPES	7 DAYS	NONE
HIGH QUALITY WATER (HQW) ZONES	7 DAYS	NONE
SLOPES STEEPER THAN 3:1	7 DAYS	IF SLOPES ARE 10' OR LESS IN LENGTH AND ARE NOT STEEPER THAN 2:1, 14 DAYS ARE ALLOWED.
SLOPES 3:1 OR FLATTER	14 DAYS	7 DAYS FOR SLOPES GREATER THAN 50' IN LENGTH.
ALL OTHER AREAS WITH SLOPES FLATTER THAN 4:1	14 DAYS	NONE, EXCEPT FOR PERIMETERS AND HQW ZONES.

SOIL STABILIZATION SUMMARY SHEET

MATTING FOR EROSION CONTROL

CONST SHEET NO.	LINE	FROM STATION	TO STATION	SIDE	ESTIMATE (SY)
				SUBTOTAL	
MISCELLANEOUS MATTING TO BE INSTALLED AS DIRECTED BY THE ENGINEER					500
				TOTAL	
				SAY	500

Beaufort County
Bridge #060014

PROJECT REFERENCE NO.	SHEET NO.
17BP.2.R.95	EC-4
R/W SHEET NO.	
ROADWAY DESIGN ENGINEER	HYDRAULICS ENGINEER

TGS ENGINEERS
706 HILLSBOROUGH ST. STE. 200
RALEIGH, NC 27603
PH (919) 773-8887
CORP. LICENSE NO.: C-0275

CLEARING AND GRUBBING
EROSION CONTROL FOR
CONSTRUCTION SHEET 4

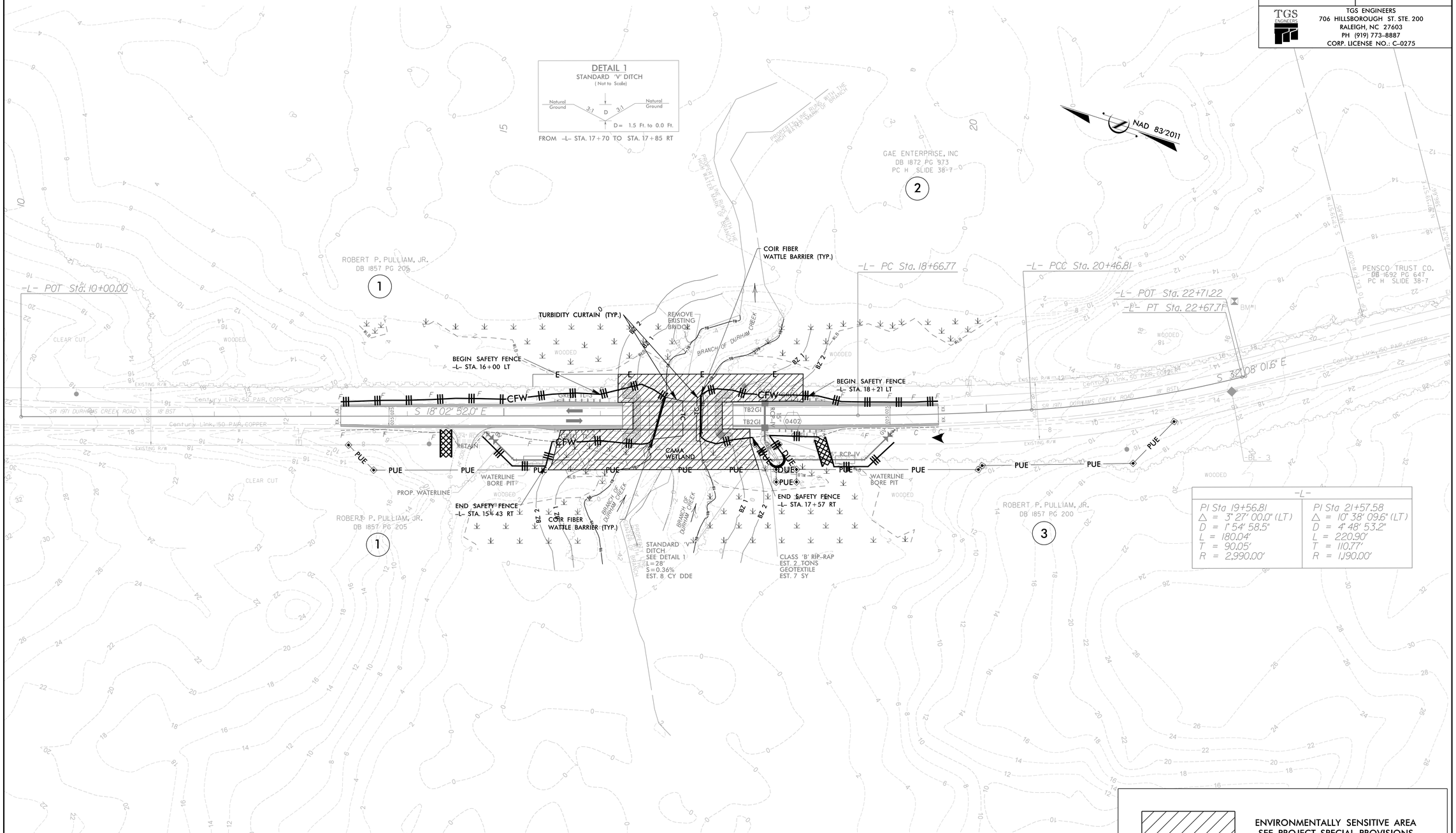

Beaufort County
Bridge #060014

PROJECT REFERENCE NO.	SHEET NO.
17BP.2.R.95	EC-5
R/W SHEET NO.	
ROADWAY DESIGN ENGINEER	HYDRAULICS ENGINEER

TGS ENGINEERS
706 HILLSBOROUGH ST. STE. 200
RALEIGH, NC 27603
PH (919) 773-8887
CORP. LICENSE NO.: C-0275

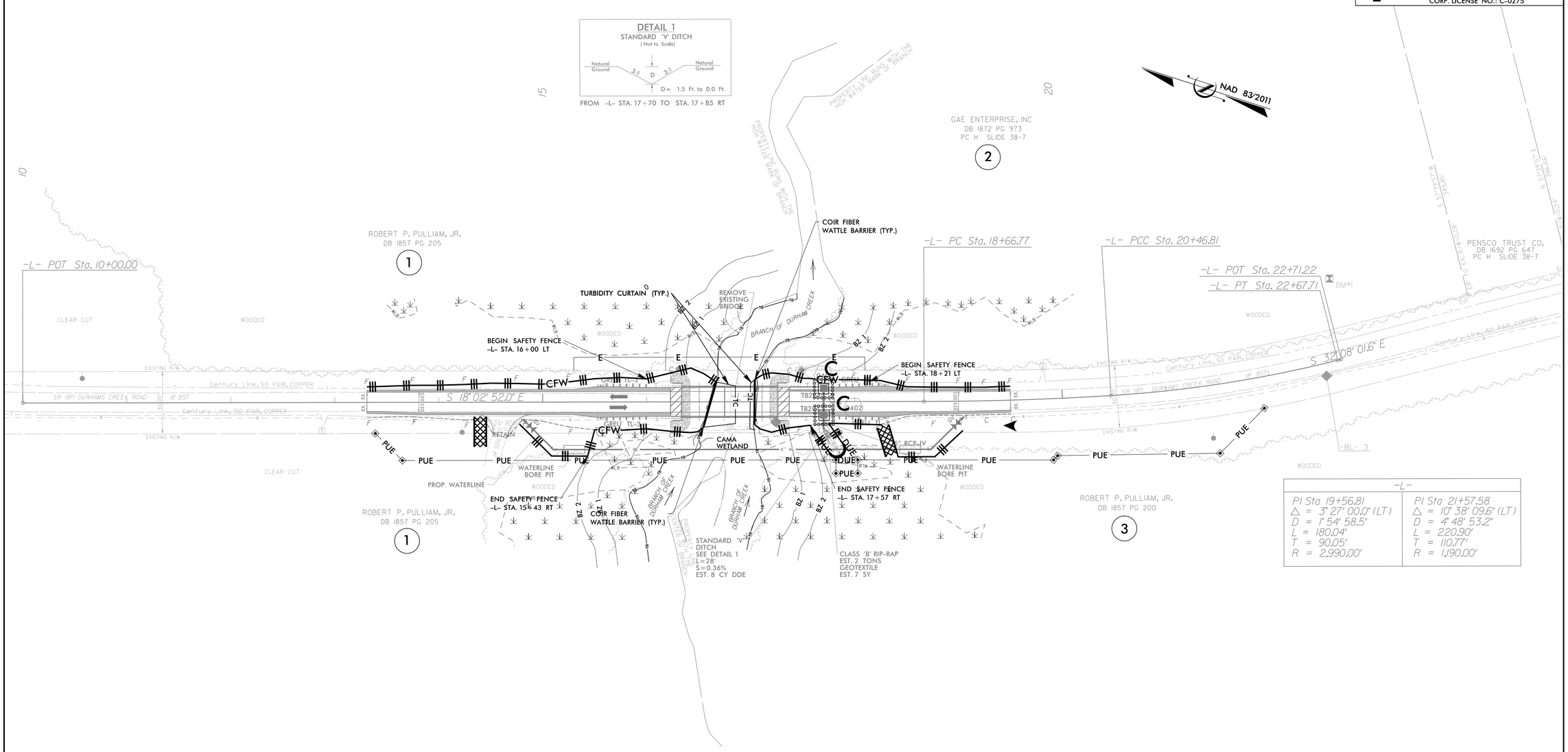

-L-	
PI Sta 19+56.81	PI Sta 21+57.58
Δ = 3° 27' 00.0" (LT)	Δ = 10° 38' 09.6" (LT)
D = 1° 54' 58.5"	D = 4° 48' 53.2"
L = 180.04'	L = 220.90'
T = 90.05'	T = 110.77'
R = 2,990.00'	R = 1,190.00'

PROJECT REFERENCE NO.	SHEET NO.
17BP.2.R.95	P-1
R/W SHEET NO.	

LEGEND

- HC HC — DENOTES HAND CLEARING
- E E — DENOTES EXCAVATION IN WETLAND
- F F — DENOTES FILL IN WETLAND
- ALLOWABLE IMPACTS ZONE 1
- ALLOWABLE IMPACTS ZONE 2

NCDOT
17BP.2.R.95 BEAUFORT COUNTY
REPLACE BRIDGE NO. 0014
ON SR 1971 (DURHAM CREEK RD) OVER BRANCH OF DURHAM CREEK BETWEEN
SR 1957 AND SR 1936

SCALE 1" = 20'
DECEMBER 10, 2019
FOR PERMITTING ONLY:
NOT FOR CONSTRUCTION

NC GRID NAD 83 NA 2011

Q1
PERMANENT WETLAND IMPACTS = 0.00 Ac /0 SF
HAND CLEARING IN WETLANDS = 0.00 Ac /0 SF
PERMANENT STREAM IMPACTS = 0 LF
TEMPORARY STREAM IMPACTS = 0 LF
BUFFER ZONE 1 IMPACTS = 0 SF
BUFFER ZONE 2 IMPACTS = 0 SF

Q2
PERMANENT WETLAND IMPACTS = 0.00 Ac /0 SF
HAND CLEARING IN WETLANDS = 0.00 Ac /0 SF
PERMANENT STREAM IMPACTS = 0 LF
TEMPORARY STREAM IMPACTS = 0 LF
BUFFER ZONE 1 IMPACTS = 15 SF
BUFFER ZONE 2 IMPACTS = 5 SF

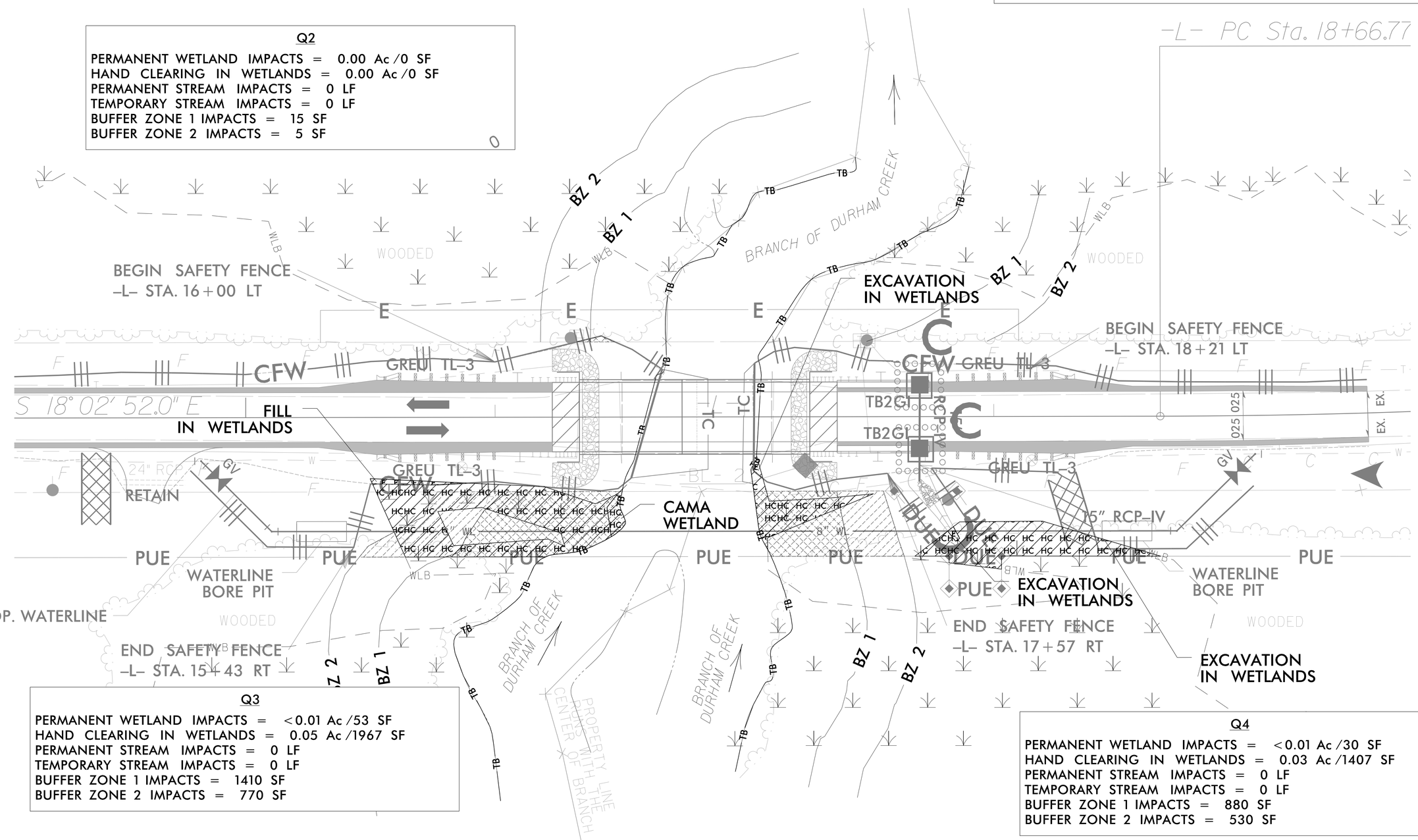

Q3
PERMANENT WETLAND IMPACTS = <0.01 Ac /53 SF
HAND CLEARING IN WETLANDS = 0.05 Ac /1967 SF
PERMANENT STREAM IMPACTS = 0 LF
TEMPORARY STREAM IMPACTS = 0 LF
BUFFER ZONE 1 IMPACTS = 1410 SF
BUFFER ZONE 2 IMPACTS = 770 SF

Q4
PERMANENT WETLAND IMPACTS = <0.01 Ac /30 SF
HAND CLEARING IN WETLANDS = 0.03 Ac /1407 SF
PERMANENT STREAM IMPACTS = 0 LF
TEMPORARY STREAM IMPACTS = 0 LF
BUFFER ZONE 1 IMPACTS = 880 SF
BUFFER ZONE 2 IMPACTS = 530 SF

REVISIONS

8/17/99

12/10/2019
X:\NCDOT\B-4709\Hydraulics\PERMITS_Environmental\Drawings\B-4709_Hyd_P1.dgn
User:bhenegar

DocuSign Envelope ID: 8D7E3DB2-EE7D-4D68-981C-37701EF5A67B

TIP PROJECT: 17BP.2.R.95

See Sheet 1A For Index of Sheets
See Sheet 1B For Conventional Symbols
See Sheet RW02C-1 For Survey Control Sheet

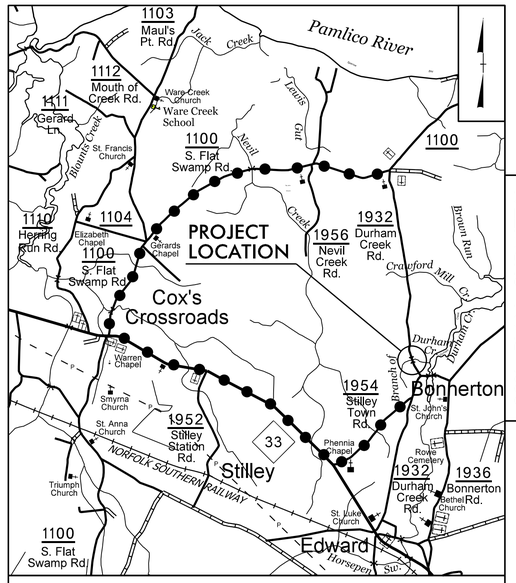

VICINITY MAP
OFFSITE DETOUR

90% PLAN SUBMITTAL

STATE OF NORTH CAROLINA
DIVISION OF HIGHWAYS

T.I.P. NO.	SHEET NO.
17BP.2.R.95	UC–1

DOCUMENT NOT CONSIDERED FINAL UNLESS ALL SIGNATURES COMPLETED

2018 STANDARD SPECIFICATIONS

UTILITY CONSTRUCTION PLANS
BEAUFORT COUNTY

LOCATION: REPLACE BRIDGE NO. 40 ON SR 1971 OVER DURHAM CREEK TRIBUTARY
TYPE OF WORK: RELOCATE 8" WATER LINE

NAD 83/2011

UC–4 | 4

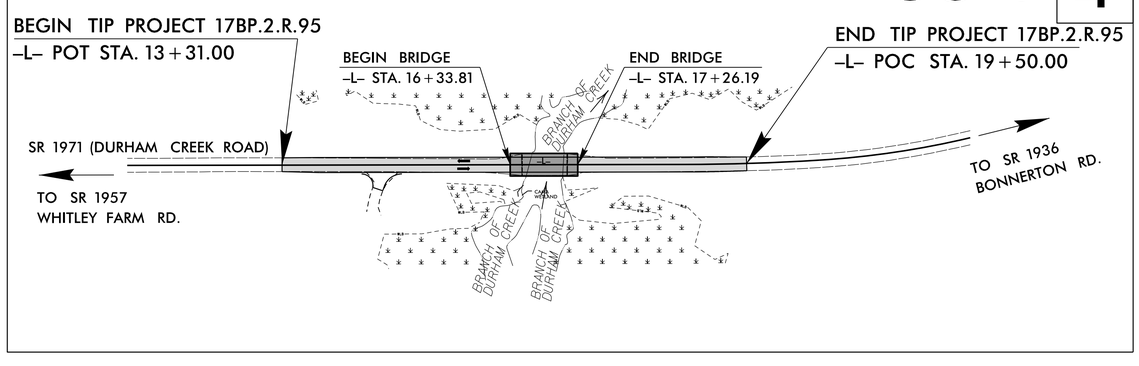

GRAPHIC SCALES

50 25 0 50 100
PLANS

50 25 0 50 100
PROFILE (HORIZONTAL)

10 5 0 10 20
PROFILE (VERTICAL)

INDEX OF SHEETS

SHEET NO.	DESCRIPTION
UC–1	TITLE SHEET
UC–2	UTILITY SYMBOLOGY
UC–3	NOTES
UC–3A TO UC–3B	DETAILS
UC–4	UTILITY CONSTRUCTION SHEET

WATER AND SEWER OWNERS ON PROJECT

(A) WATER – BEAUFORT COUNTY

PREPARED IN THE OFFICE OF:

HINDE ENGINEERING
License No. C-2639
401 Harrison Oaks Blvd., Suite 220 Cary, NC 27513
Ph. (919) 653-0001

Clint L. Stevens, P.E.	UTILITIES PROJECT MANAGER
Corey D. Bousquet, P.E.	UTILITIES PROJECT ENGINEER
Jordan K. Chapman	UTILITIES PROJECT DESIGNER

SEAL

NORTH CAROLINA PROFESSIONAL SEAL 023041 ENGINEER COREY D. BOUSQUET
Documents originated by:
Corey D. Bousquet, P.E.
023041
ELECTRONICALLY SIGNED
2/17/2020

DIVISION OF HIGHWAYS
UTILITIES UNIT
1555 MAIL SERVICES CENTER
RALEIGH NC 27699-1555
PHONE (919) 707-6690
FAX (919) 250-4151

Preston Hunter, P.E.	DIVISION CONTACT #1
Cadmus Capehart, P.E.	DIVISION CONTACT #2
Sarah Lentine, P.E.	DIVISION CONTACT #3
David Kramer	DIVISION CONTACT #4

17-FEB-2020 07:41
S:\Server Files\PROJECTS\2016\A2016703.00_TGS_Div-2 LIB Replacement\A2016703.07_TGS_Div-2 LIB B-4709\Design\Utilities\EngineeringUC\Proj\B-4709_ut_tsh_UCl_psh.dgn
$$$$USERNAME$$$$

DocuSign Envelope ID: 025C6200-948E-4BF3-8C35-99332019AD8E

STATE OF NORTH CAROLINA
DIVISION OF HIGHWAYS

HINDE ENGINEERING
License No. C-2639
401 Harrison Oaks Blvd., Suite 220 Cary, NC 27513

PROJECT REFERENCE NO.	SHEET NO.
17BP.2.R.95	UC-2

UTILITIES PLAN SHEET SYMBOLS

PROPOSED WATER SYMBOLS

- Water Line (Sized as Shown) — 12" WL
- 11¼ Degree Bend
- 22½ Degree Bend
- 45 Degree Bend
- 90 Degree Bend
- Plug
- Tee
- Cross
- Reducer
- Gate Valve — GV
- Butterfly Valve — BV
- Tapping Valve — TGV
- Line Stop — LS
- Line Stop with Bypass — LS/BP
- Blow Off — BO
- Fire Hydrant — PFH
- Relocate Fire Hydrant — RFH
- Remove Fire Hydrant — REM FH
- Water Meter — PWM
- Relocate Water Meter — RWM
- Remove Water Meter — REM WM
- Water Pump Station — PS(W)
- RPZ Backflow Preventer — PRPZ
- DCV Backflow Preventer — PBFP
- Relocate RPZ Backflow Preventer — RRPZ
- Relocate DCV Backflow Preventer — RBFP

PROPOSED SEWER SYMBOLS

- Gravity Sewer Line (Sized as Shown) — 12" SS
- Force Main Sewer Line (Sized as Shown) — 12" FSS
- Manhole (Sized per Note)
- Sewer Pump Station — PS(SS)

PROPOSED MISCELLANOUS UTILITIES SYMBOLS

- Power Pole
- Telephone Pole
- Joint Use Pole
- Telephone Pedestal — TEL PED
- Utility Line by Others (Type as Shown) — PROP O/H POW LINES
- Trenchless Installation — 12" TL INSTALL
- Encasement by Open Cut — 24" ENCAS BY OC
- Encasement — 24" ENCASEMENT
- Thrust Block
- Air Release Valve — AR
- Utility Vault — UV
- Concrete Pier — CP
- Steel Pier — SP
- Plan Note — NOTE
- Pay Item Note — PAY ITEM

EXISTING UTILITIES SYMBOLS

- Power Pole
- Telephone Pole
- Joint Use Pole
- Utility Pole
- Utility Pole with Base
- H-Frame Pole
- Power Transmission Line Tower
- Water Manhole
- Power Manhole
- Telephone Manhole
- Sanitary Sewer Manhole
- Hand Hole for Cable
- Power Transformer
- Telephone Pedestal
- CATV Pedestal
- Gas Valve
- Gas Meter
- Located Miscellaneous Utility Object
- Abandoned According to Utility Records — AATUR
- End of Information — E.O.I.
- *Underground Power Line — P
- *Underground Telephone Cable — T
- *Underground Telephone Conduit — TC
- *Underground Fiber Optics Telephone Cable — T FO
- *Underground TV Cable — TV
- *Underground Fiber Optics TV Cable — TV FO
- *Underground Gas Pipeline — G
- Aboveground Gas Pipeline — A/G Gas
- *Underground Water Line — W
- Aboveground Water Line — A/G Water
- *Underground Gravity Sanitary Sewer Line — SS
- Aboveground Gravity Sanitary Sewer Line — A/G Sanitary Sewer
- *Underground SS Forced Main Line — FSS
- Underground Unknown Utility Line — ?UTL
- SUE Test Hole
- Water Meter
- Water Valve
- Fire Hydrant
- Sanitary Sewer Cleanout

*For Existing Utilities

- Utility Line Drawn from Record (Type as Shown) — W
- Designated Utility Line (Type as Shown) — W

REV: 2/1/2012

17-FEB-2020 07:09
pl0cem7 c:\pwworking\d0392\d0392878\TCS_Div-2 LIB B-4709\Design\Utilities\Engineering\UC\Proj\B-4709_ut_sym_UC02_psh.dgn

DocuSign Envelope ID: 025C6200-948E-4BF3-8C35-99332019AD8E

HINDE ENGINEERING
License No. C-2639
401 Harrison Oaks Blvd., Suite 220 Cary, NC 27513

DOCUMENT NOT CONSIDERED FINAL UNLESS ALL SIGNATURES COMPLETED

NORTH CAROLINA PROFESSIONAL ENGINEER SEAL 023041 COREY D. BOUSQUET
DocuSigned by: Corey D. Bousquet, P.E.
BE23F928878C49A...
2/17/2020

UTILITY CONSTRUCTION PLANS ONLY

UTILITY CONSTRUCTION

UTILITY CONSTRUCTION

GENERAL NOTES:

1. THE PROPOSED UTILITY CONSTRUCTION SHALL MEET THE APPLICABLE REQUIREMENTS OF THE NC DEPARTMENT OF TRANSPORTATION'S "STANDARD SPECIFICATIONS FOR ROADS AND STRUCTURES" DATED JANUARY 2018.

2. THE EXISTING UTILITIES BELONG TO BEAUFORT COUNTY. THE CONTACT FOR THE COUNTY IS:

ERICK JENNINGS
WATER SYSTEMS MANAGER
PH: 252-975-0720

3. ALL WATER LINES TO BE INSTALLED WITHIN COMPLIANCE OF THE RULES AND REGULATIONS OF THE NORTH CAROLINA DEPARTMENT OF ENVIRONMENTAL QUALITY, DIVISION OF WATER RESOURCES, PUBLIC WATER SUPPLY SECTION. ALL SEWER LINES TO BE INSTALLED WITHIN COMPLIANCE OF THE RULES AND REGULATIONS OF THE NORTH CAROLINA DEPARTMENT OF ENVIRONMENT QUALITY, DIVISION OF WATER RESOURCES, WATER QUALITY SECTION. PERFORM ALL WORK IN ACCORDANCE WITH THE APPLICABLE PLUMBING CODES.

4. THE UTILITY OWNER OWNS THE EXISTING UTILITY FACILITIES AND WILL OWN THE NEW UTILITY FACILITIES AFTER ACCEPTANCE BY THE DEPARTMENT. THE DEPARTMENT OWNS THE CONSTRUCTION CONTRACT AND HAS ADMINISTRATIVE AUTHORITY. COMMUNICATIONS AND DECISIONS BETWEEN THE CONTRACTOR AND UTILITY OWNER ARE NOT BINDING UPON THE DEPARTMENT OR THIS CONTRACT UNLESS AUTHORIZED BY THE ENGINEER. AGREEMENTS BETWEEN THE UTILITY OWNER AND CONTRACTOR FOR THE WORK THAT IS NOT PART OF THIS CONTRACT OR IS SECONDARY TO THIS CONTRACT ARE ALLOWED, BUT ARE NOT BINDING UPON THE DEPARTMENT.

5. PROVIDE ACCESS FOR THE DEPARTMENT PERSONNEL AND THE OWNER'S REPRESENTATIVES TO ALL PHASES OF CONSTRUCTION. NOTIFY DEPARTMENT PERSONNEL AND THE UTILITY OWNER TWO WEEKS PRIOR TO COMMENCEMENT OF ANY WORK AND ONE WEEK PRIOR TO SERVICE INTERRUPTION. KEEP UTILITY OWNERS' REPRESENTATIVES INFORMED OF WORK PROGRESS AND PROVIDE OPPORTUNITY FOR INSPECTION OF CONSTRUCTION AND TESTING.

6. THE PLANS DEPICT THE BEST AVAILABLE INFORMATION FOR THE LOCATION, SIZE, AND TYPE OF MATERIAL FOR ALL EXISTING UTILITIES. MAKE INVESTIGATIONS FOR DETERMINING THE EXACT LOCATION, SIZE, AND TYPE MATERIAL OF THE EXISTING FACILITIES AS NECESSARY FOR THE CONSTRUCTION OF THE PROPOSED UTILITIES AND FOR AVOIDING DAMAGE TO EXISTING FACILITIES. REPAIR ANY DAMAGE INCURRED TO EXISTING FACILITIES TO THE ORIGINAL OR BETTER CONDITION AT NO ADDITIONAL COST TO THE DEPARTMENT.

7. MAKE FINAL CONNECTIONS OF THE NEW WORK TO THE EXISTING SYSTEM WHERE INDICATED ON THE PLANS, AS REQUIRED TO FIT THE ACTUAL CONDITIONS, OR AS DIRECTED.

8. MAKE CONNECTIONS BETWEEN EXISTING AND PROPOSED UTILITIES AT TIMES MOST CONVENIENT TO THE PUBLIC, WITHOUT ENDANGERING THE UTILITY SERVICE, AND IN ACCORDANCE WITH THE UTILITY OWNER'S REQUIREMENTS. MAKE CONNECTIONS ON WEEKENDS, AT NIGHT, AND ON HOLIDAYS IF NECESSARY.

9. ALL UTILITY MATERIALS SHALL BE APPROVED PRIOR TO DELIVERY TO THE PROJECT. SEE 1500-7, " SUBMITTALS AND RECORDS" IN SECTION 1500 OF THE STANDARD SPECIFICATIONS.

NOTES TO THE CONTRACTOR:

1. BEAUFORT COUNTY SHALL OPEN AND CLOSE ALL VALVES.

2. BEAUFORT COUNTY MUST BE PRESENT DURING THE BORE SETUP AND OPERATION, PRESSURE AND LEAKAGE TEST, CHLORINATION TEST, AND FLUSHING.

3. CERTIFED BACTERIOLOGICAL AND CONTAMINANT TEST SHALL BE PERFORMED BY BEAUFORT COUNTY. IF THE SAMPLE FAILS RECHLORINATE THE WATER LINE AS STATED IN THE NCDOT STANDARD SPECIFICATIONS FOR ROADS AND STRUCTURES.

4. USE # 12 AWG SOLID-COPPER WIRE WITH BLUE INSULATION FOR TRACER WIRE. SEE TRACER WIRE DETAIL FOR LOCATION AND PLACEMENT ON SHEET UC-3A AND UC-3B. BEAUFORT COUNTY SHALL CONDUCT THE CONTINUITY TEST ONCE THE TRACER WIRES ARE INSTALLED.

5. PROVIDE TWO COPIES OF THE AS-BUILT PLANS FOR THE WATER LINE INSTALLED TO BEAUFORT COUNTY AND TWO COPIES TO ENGINEER.

6.THE AS-BUILT PLANS SHALL INCLUDE:
SIZE AND TYPE OF PIPE
BORE LOG FOR THE HDD
GPS LOCATION OF ALL FITTINGS AND VALVES
COORDINATES OF UTILITY CONTROLS
VERTICAL AND HORZITAL LOCATIONS OF THE PIPING

7. USE GRIPRING OR APPROVED EQUAL FOR RESTRAINING THE DI WATER PIPE AND FITTINGS

8. USE A MINIMUM 2" BLOWOFF TO FLUSH OUT THE PROPOSED WATER MAIN.

17-FEB-2020 07:03
S:\Server_Files\PROJECTS\2016\A201670300_TGS_Div-2 LIB Replacement\A201670307_TGS_Div-2 LIB B-4709\Design\Utilities\Engineering\UC\Proj\B-4709_ut_notes_UC3_psh.dgn
$$$$USERNAME$$$$

DocuSign Envelope ID: 025C6200-948E-4BF3-8C35-99332019AD8E

NOT TO SCALE

HINDE ENGINEERING
License No. C-2839
401 Harrison Oaks Blvd., Suite 220 Cary, NC 27513

DOCUMENT NOT CONSIDERED FINAL UNLESS ALL SIGNATURES COMPLETED

PROJECT REFERENCE NO.	SHEET NO.
17BP.2.R.95	UC-3A
DESIGNED BY: JKC	
DRAWN BY: ASW	
CHECKED BY: CLS	
APPROVED BY: CDB	
REVISED:	
NORTH CAROLINA DEPARTMENT OF TRANSPORTATION	
UTILITIES ENGINEERING SEC. PHONE:(919)707-6690 FAX:(919)250-4151	UTILITY CONSTRUCTION PLANS ONLY

NORTH CAROLINA PROFESSIONAL SEAL ENGINEER COREY D BOUSQUET
DocuSigned by: Corey D. Bousquet, PE
023047
5F23F92887BC49A...
2/17/2020

UTILITY CONSTRUCTION

PROJECT TYPICAL DETAILS

MAXIMUM TRENCH WIDTH
AT TOP OF PIPE

NOMINAL PIPE SIZE (INCHES)	TRENCH WIDTH (INCHES)	NOMINAL PIPE SIZE (INCHES)	TRENCH WIDTH (INCHES)
4	28	20	44
6	30	24	48
8	32	30	54
10	34	36	60
12	36	42	66
14	38	48	72
16	40	54	78
18	42		

TRENCH DETAIL

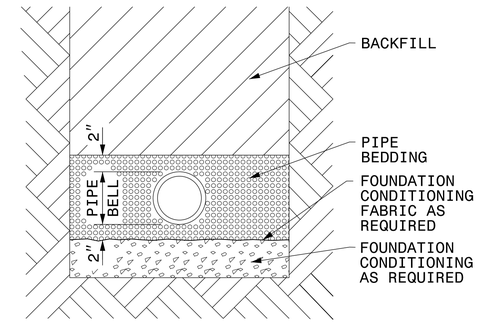

PLACE FOUNDATION CONDITIONING MATERIAL BELOW BEDDING IF REQUIRED, AS DIRECTED BY ENGINEER. PIPE BEDDED IN SELECT MATERIAL, CLASS II (TYPE 1) OR CLASS III. TRENCH BACKFILLED IN LOOSE 6" LAYERS COMPACTED TO TOP OF TRENCH USING LOCAL EXCAVATED MATERIAL IF APPROVED BY THE ENGINEER, OR SELECT MATERIAL. ALL MATERIAL SHALL BE FREE OF ROCKS, FOREIGN MATERIAL, AND FROZEN EARTH. COMPACTION SHALL BE TO APPROXIMATELY 95% DENSITY IN ACCORDANCE WITH AASHTO T-99 AS MODIFIED BY THE DEPARTMENT OF TRANSPORTATION.

MAIN LINE VALVE

SECTION VIEW

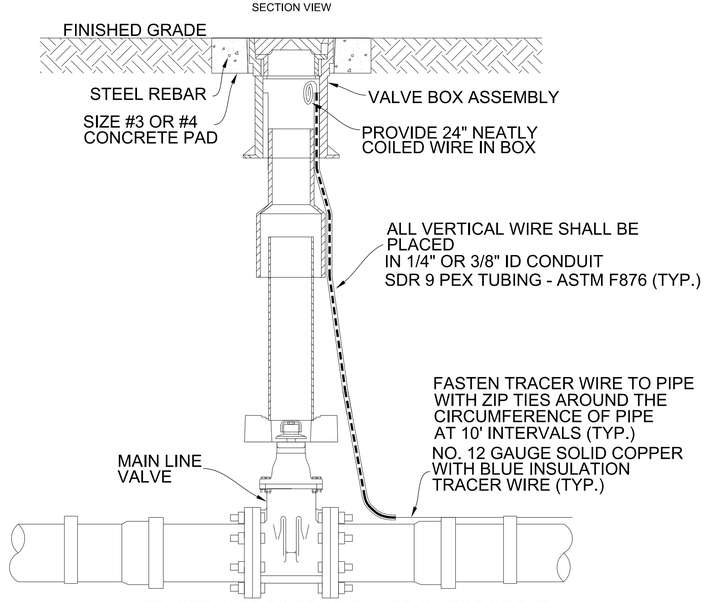

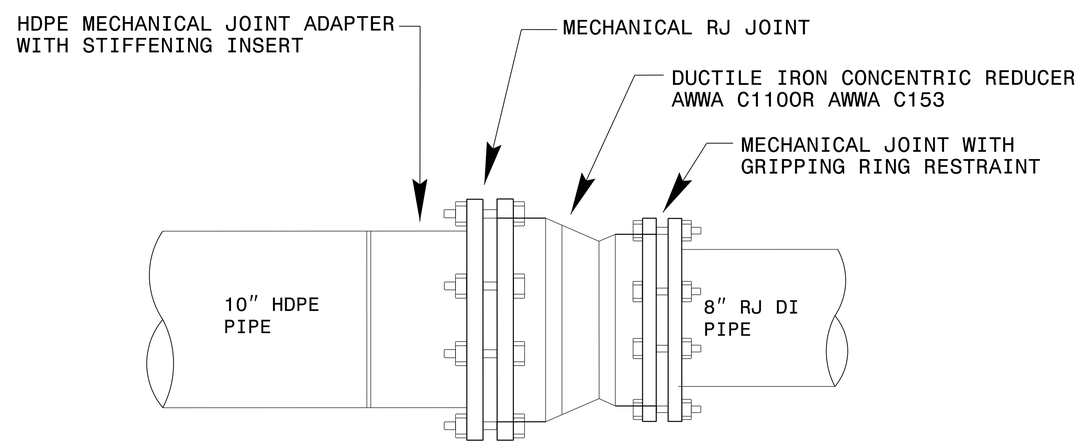

TRANSITION DETAIL FROM 10" HDPE TO 8" RJ DI WATER PIPE

17-FEB-2020 07:01
$$$$USERNAME$$$$ c:\pwworkdir\PROJECTS\2016\A2016703.00_TGS_Div-2 LIB Replacement\A2016703.07_TGS_Div-2 LIB B-4709\Design\Utilities\Engineering\UC\Proj\B-4709_ut_dtl_UC3A_psh.dgn

DocuSign Envelope ID: 025C6200-948E-4BF3-8C35-99332019AD8E

PROJECT REFERENCE NO.	SHEET NO.
17BP.2.R.95	UC-3B
DESIGNED BY: JKC	
DRAWN BY: ASW	
CHECKED BY: CLS	
APPROVED BY: CDB	
REVISED:	

HINDE ENGINEERING
License No. C-2839
401 Harrison Oaks Blvd., Suite 220 Cary, NC 27513

DOCUMENT NOT CONSIDERED FINAL UNLESS ALL SIGNATURES COMPLETED

NORTH CAROLINA DEPARTMENT OF TRANSPORTATION

UTILITIES ENGINEERING SEC.
PHONE:(919)707-6690
FAX:(919)250-4151

NORTH CAROLINA PROFESSIONAL SEAL ENGINEER COREY D BOUSQUET
Designed by: Corey Bousquet, PE
02/04/17
B823F92887BC49A...
2/17/2020
UTILITY CONSTRUCTION PLANS ONLY

UTILITY CONSTRUCTION

IN-LINE SPLICE

NOT TO SCALE

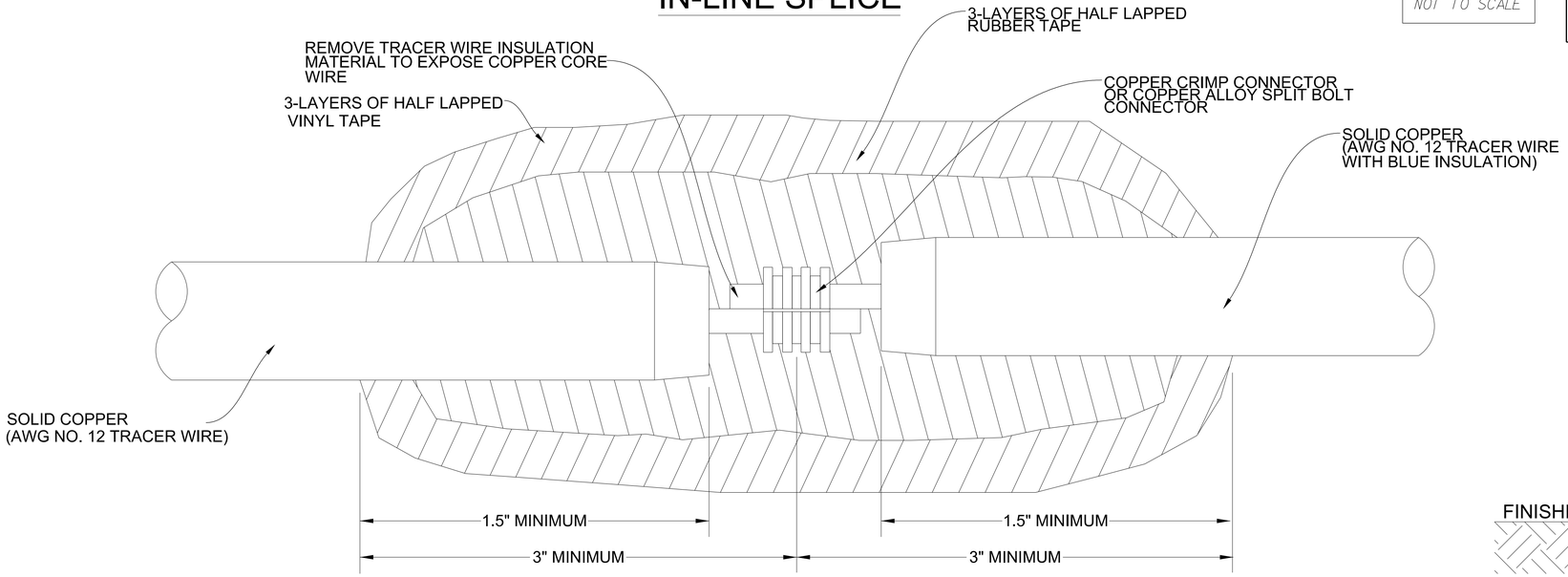

BORE DETAIL

PROFILE VIEW

10" HDPE WATER LINE

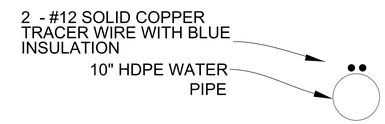

NOTES:

1. IN LINE SPLICES SHALL BE LIMITED TO THE GREATEST EXTENT POSSIBLE. TRACER WIRE SHALL BE AS CONTINUOUS AS POSSIBLE WITHOUT SPLICES.
2. INLINE SPLICES SHALL INCLUDE 3 FEET OF SLACK WIRE ON EACH SIDE OF EACH SPLICE.

TRACER WIRE FOR WATER MAIN

SECTION VIEW

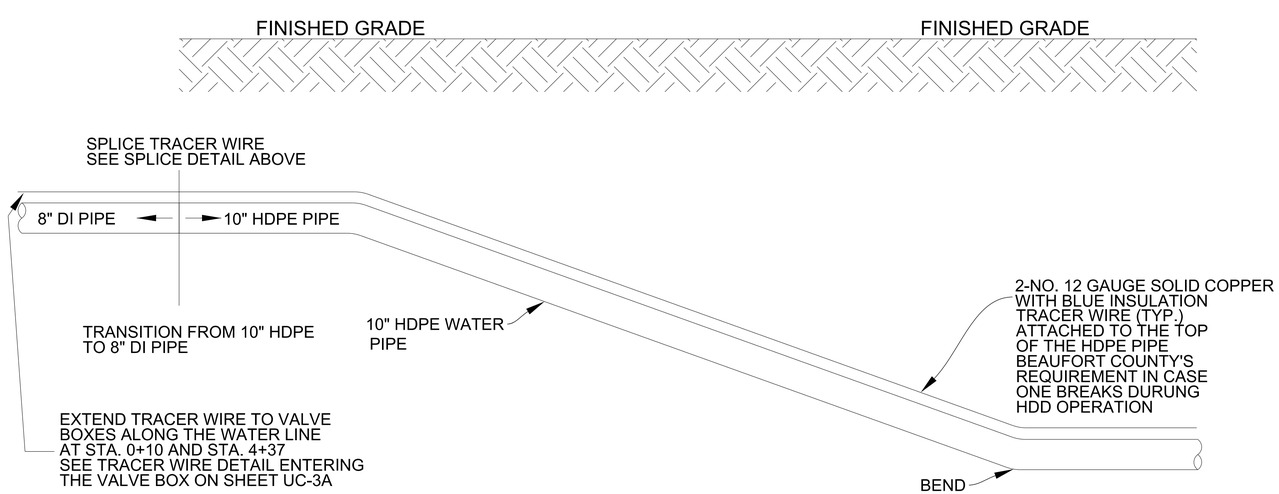

TRENCH DETAIL

PROFILE VIEW

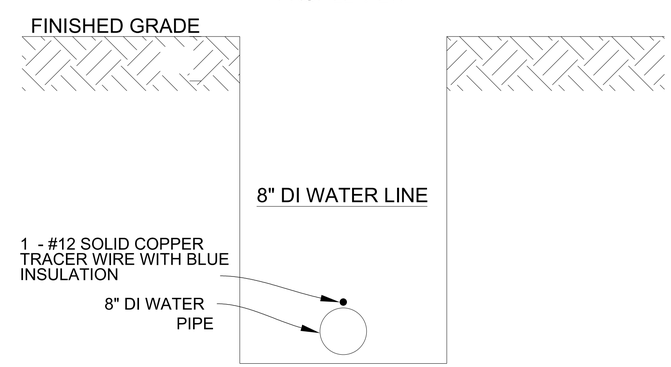

17-FEB-2020 07:03
S:\Design\PROJECTS\2016\A2016703.00_TGS_Div-2 LIB Replacement\A2016703.07_TGS_Div-2 LIB B-4709\Design\Utilities\Engineering\UC\Proj\B-4709_ut_dtl_UC3B_psh.dgn
$$$$USERNAME$$$$

DocuSign Envelope ID: 8D7E3DB2-EE7D-4D68-981C-37701EF5A67B

HINDE ENGINEERING
License No. C-2839
401 Harrison Oaks Blvd., Suite 220 Cary, NC 27513

PROJECT REFERENCE NO.	SHEET NO.
17BP.2.R.95	UC-4
DESIGNED BY: JKC	
DRAWN BY: ASW	
CHECKED BY: CLS	
APPROVED BY: CDB	
REVISED:	
NORTH CAROLINA DEPARTMENT OF TRANSPORTATION	
UTILITIES ENGINEERING SEC. PHONE:(919)707-6690 FAX:(919)250-4151	UTILITY CONSTRUCTION PLANS ONLY

NORTH CAROLINA PROFESSIONAL SEAL ENGINEER COREY D. BOUSQUET 023041
Designed by: Corey D. Bousquet, P.E.
B323F92887BC49A...
2/17/2020

UTILITY CONSTRUCTION

DOCUMENT NOT CONSIDERED FINAL UNLESS ALL SIGNATURES COMPLETED

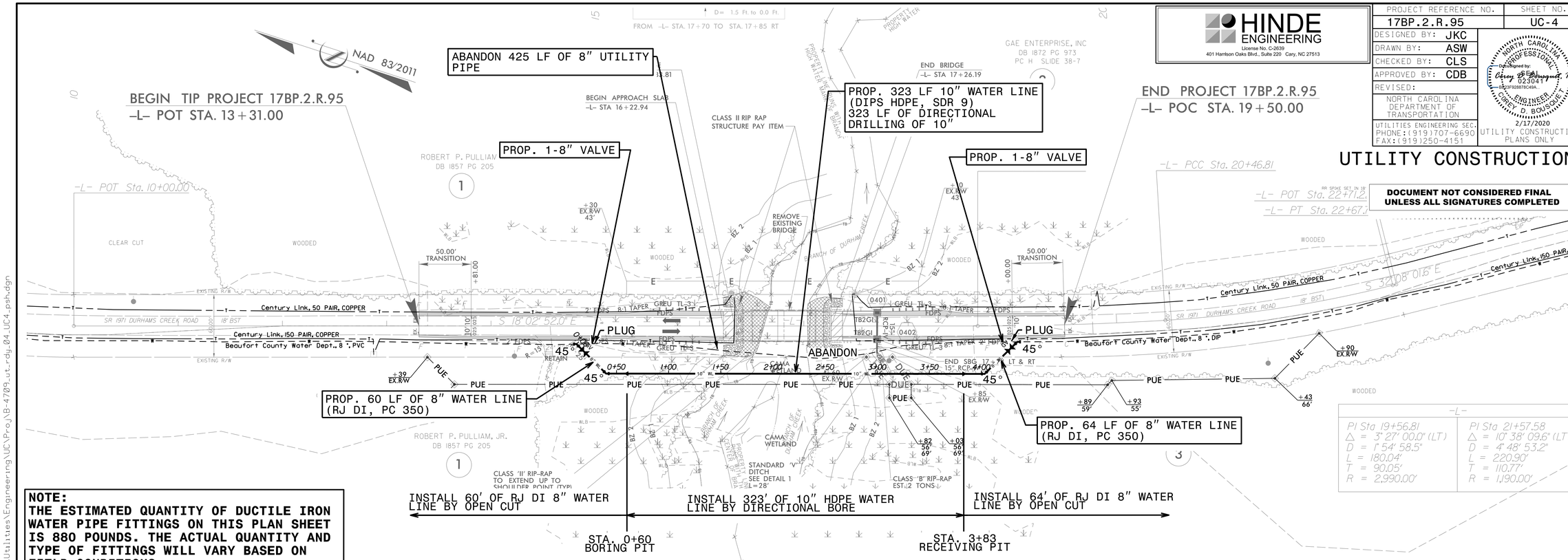

NOTE:
THE ESTIMATED QUANTITY OF DUCTILE IRON WATER PIPE FITTINGS ON THIS PLAN SHEET IS 880 POUNDS. THE ACTUAL QUANTITY AND TYPE OF FITTINGS WILL VARY BASED ON FIELD CONDITIONS.

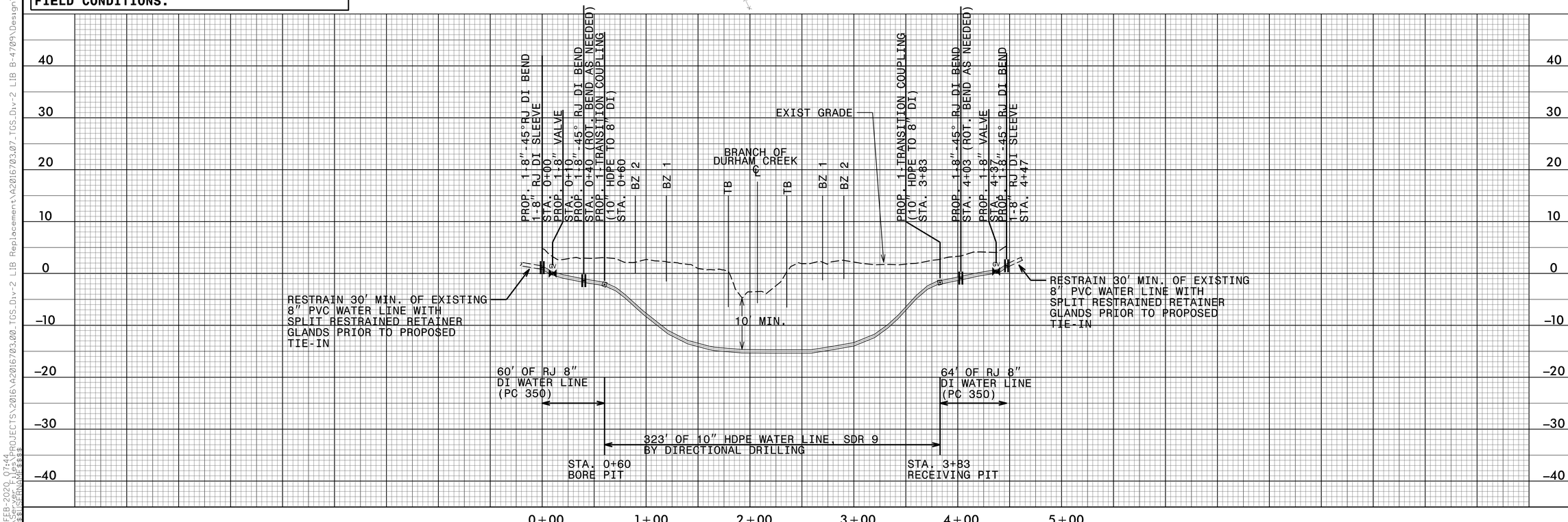

17-FEB-2020 07:46
S:\Unit Projects\B-4709\Design\Utilities\Engineering\UC\Proj\B-4709_ut_rdy_04_UC4_psh.dgn
$$$$USERNAME$$$$ PROJECTS\2016\A2016703.00_TGS_Div-2 LIB Replacement\A2016703.07_TGS_Div-2 LIB B-4709\

TIP PROJECT: 17BP.2.R.95

T.I.P. NO.	SHEET NO.
17BP.2.R.95	UO–1

NOTE:
ALL UTILITY WORK SHOWN ON THIS SHEET IS DONE BY OTHERS.
NO PAYMENT WILL BE MADE TO THE CONTRACTOR FOR UTILITY WORK SHOWN ON THIS SHEET.

STATE OF NORTH CAROLINA
DIVISION OF HIGHWAYS

UTILITIES BY OTHERS PLANS
BEAUFORT COUNTY

LOCATION: REPLACE BRIDGE NO. 14 ON SR 1971 OVER BRANCH OF DURHAM CREEK

TYPE OF WORK: GRADING, DRAINAGE, STRUCTURE, AND PAVING

90% PLAN SUBMITTAL

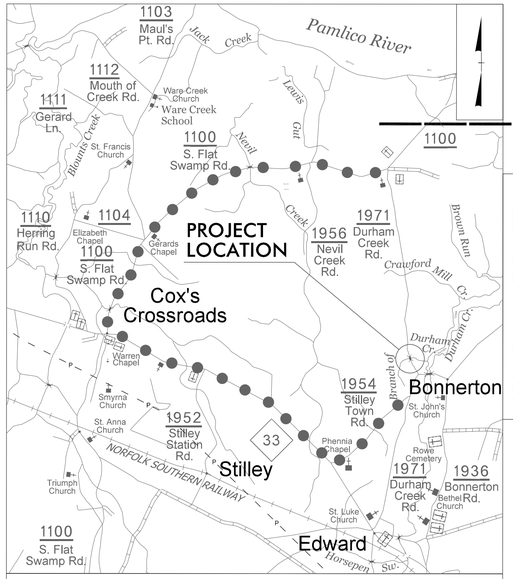

VICINITY MAP
OFFSITE DETOUR

NAD 83/2011

UO–2 4

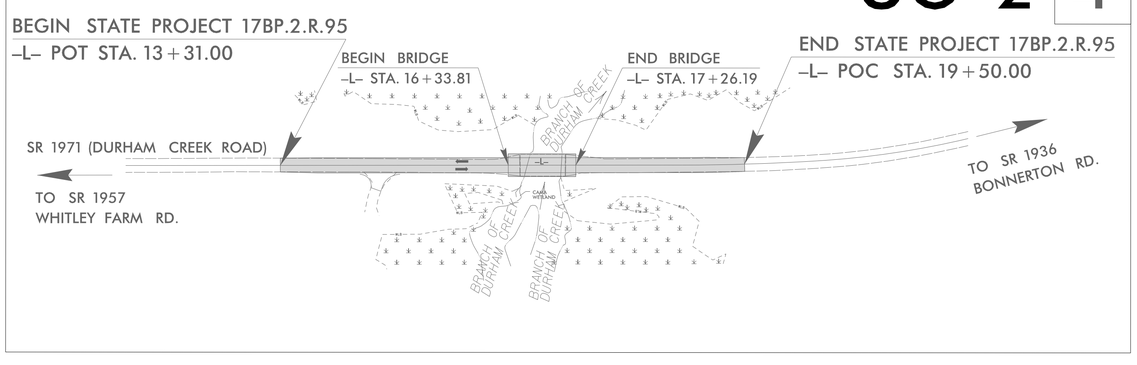

DOCUMENT NOT CONSIDERED FINAL UNLESS ALL SIGNATURES COMPLETED

GRAPHIC SCALES

50 25 0 50 100
PLANS

50 25 0 50 100
PROFILE (HORIZONTAL)

10 5 0 10 20
PROFILE (VERTICAL)

INDEX OF SHEETS

SHEET NO.	DESCRIPTION
UO–1	TITLE SHEET
UO–2	UBO PLAN SHEET

UTILITY OWNERS WITH CONFLICTS

(A) POWER – TIDELAND EMC
(B) TELEPHONE – CENTURYLINK

PREPARED IN THE OFFICE OF:

HINDE ENGINEERING
License No. C-2639
401 Harrison Oaks Blvd., Suite 220 Cary, NC 27513
(919)-653-0001

Michael E. Davis — UTILITY COORDINATION PROJECT MANAGER
Harris Winters — PROJECT UTILITY COORDINATOR
Corey D. Bousquet, P.E. — PROJECT UTILITY DESIGNER

DIVISION OF HIGHWAYS
UTILITIES UNIT
1555 MAIL SERVICES CENTER
RALEIGH NC 27699-1555
PHONE (919) 707-6690
FAX (919) 250-4151

Michael C. Aman, PE — DIVISION CONTACT #1
David P. Kramer — DIVISION CONTACT #2

14-FEB-2020 13:45
S:\Server Files\PROJECTS\2016\A2016703.00_TGS_Div-2 LIB Replacement\A2016703.07_TGS_Div-2 LIB B-4709\Design\Utilities\Engineering\UBO\Proj\B-4709_Ut_tsh_UOL_psh.dgn
$$$$USERNAME$$$$

PROJECT REFERENCE NO.	SHEET NO.
17BP.2.R.95	U0-2
THIS SHEET CORRESPONDS TO RDY-4	

UTILITIES BY OTHERS

NOTE:
ALL UTILITY WORK SHOWN ON THIS SHEET WILL BE DONE BY OTHERS. NO PAYMENT WILL BE MADE TO THE CONTRACTOR FOR UTILITY WORK SHOWN ON THIS SHEET.

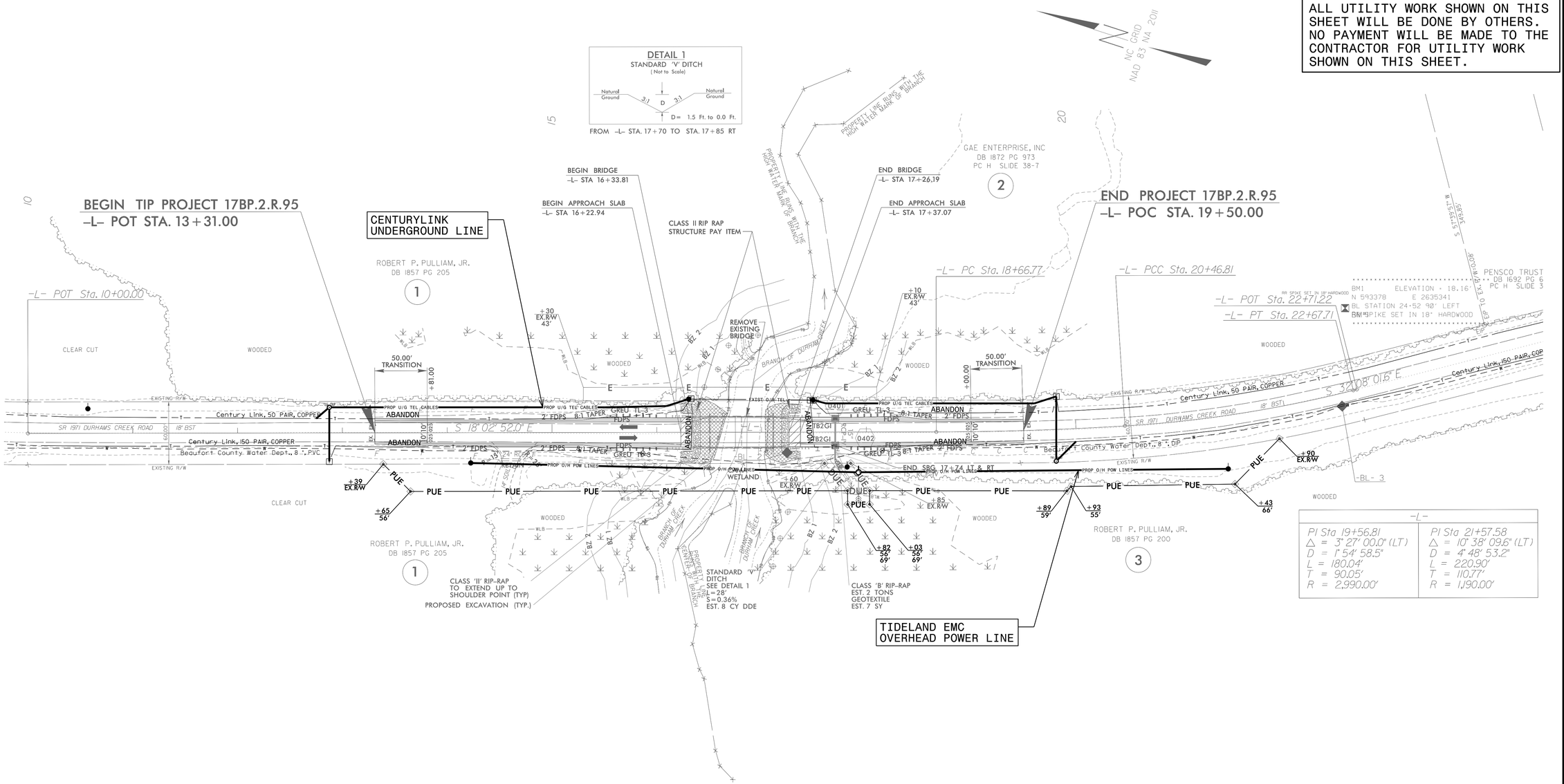

-L-	
PI Sta 19+56.81	PI Sta 21+57.58
Δ = 3° 27' 00.0" (LT)	Δ = 10° 38' 09.6" (LT)
D = 1° 54' 58.5"	D = 4° 48' 53.2"
L = 180.04'	L = 220.90'
T = 90.05'	T = 110.77'
R = 2,990.00'	R = 1,190.00'

HINDE ENGINEERING
License No. C-2639
401 Harrison Oaks Blvd., Suite 220 Cary, NC 27513

14-FEB-2022 13:45
C:\Users\rdy4\DESKTOP\PROJECTS\2016\A2016703.00_TGS_Div-2 LIB Replacement\A2016703.07_TGS_Div-2 LIB B-4709\Design\Utilities\Engineering\UB0\Proj\B-4709_Ut_rdy4_U002.psh.dgn
USERNAME = rdy4

0 5 10	PROJ. REFERENCE NO.	SHEET NO.
	17BP.2.R.95	X-1

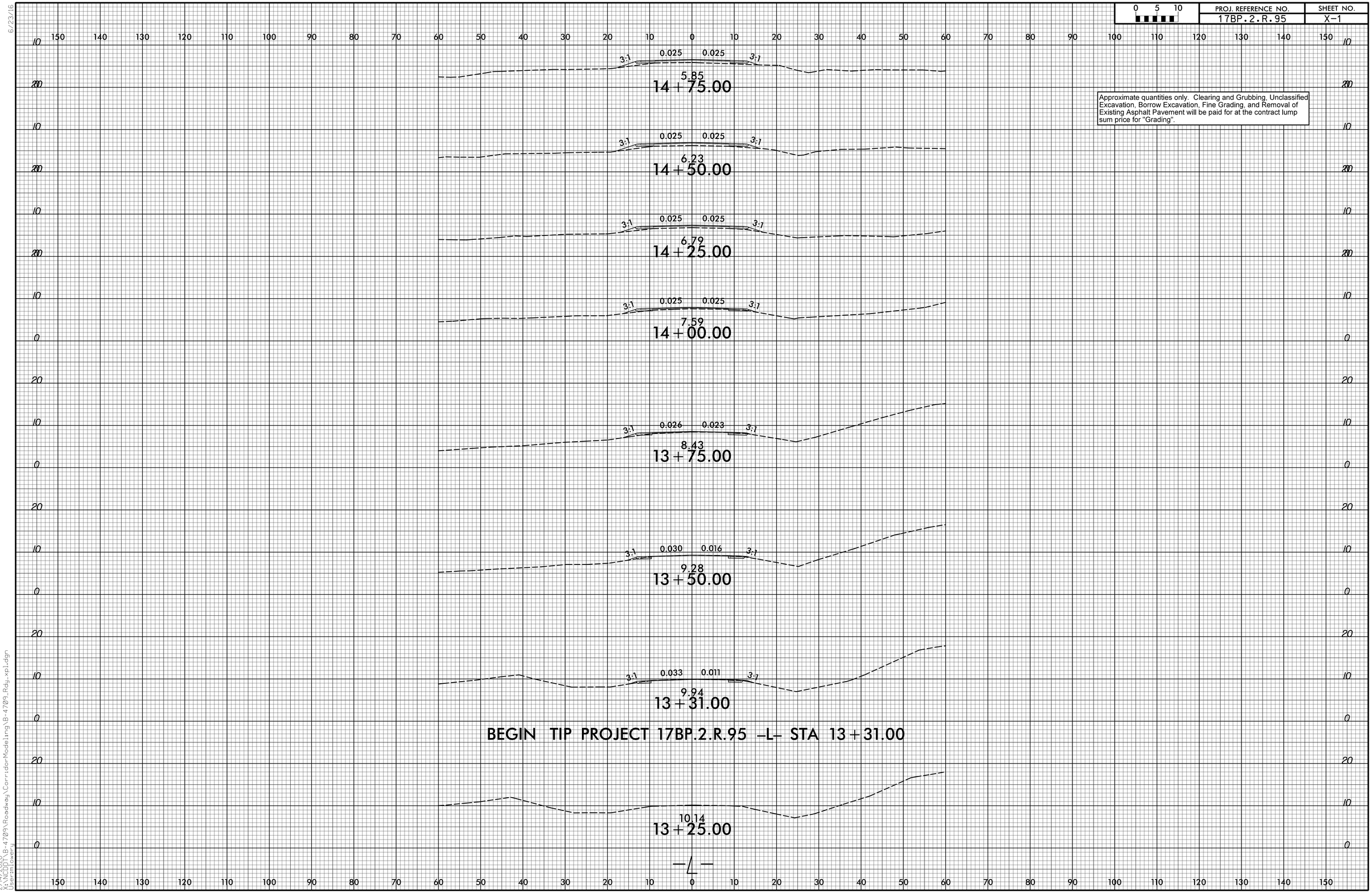

Approximate quantities only. Clearing and Grubbing, Unclassified Excavation, Borrow Excavation, Fine Grading, and Removal of Existing Asphalt Pavement will be paid for at the contract lump sum price for "Grading".

6/23/16

2/14/2020
X:\NCDOT\B-4709\Roadway\CorridorModeling\B-4709_Rdy_xpl.dgn
User:mlowery

PROJ. REFERENCE NO.	SHEET NO.
17BP.2.R.95	X-2

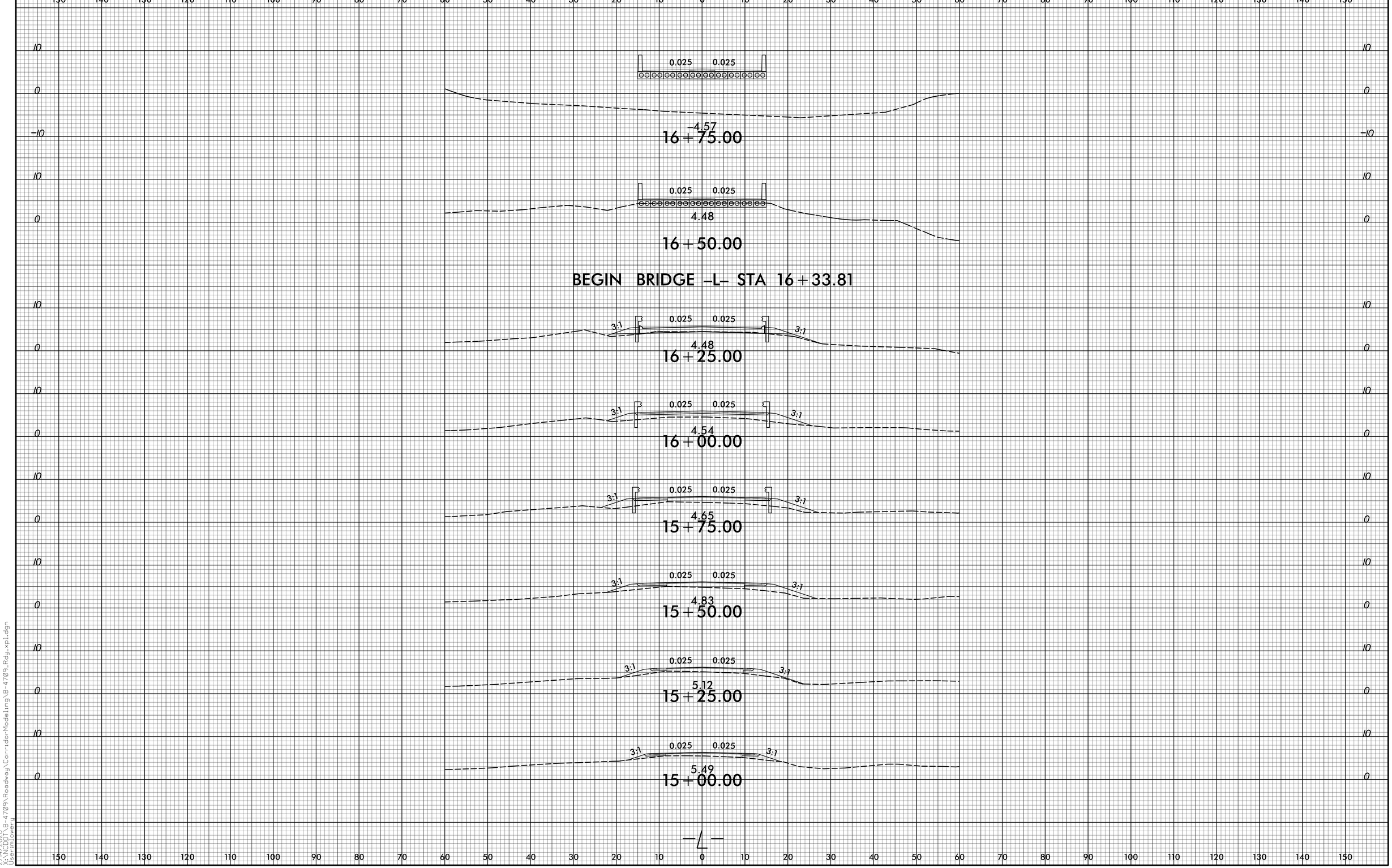

6/23/16

2/14/2020
X:\NCDOT\B-4709\Roadway\CorridorModeling\B-4709_Rdy_xpl.dgn
User:mlowery

PROJ. REFERENCE NO.	SHEET NO.
17BP.2.R.95	X-3

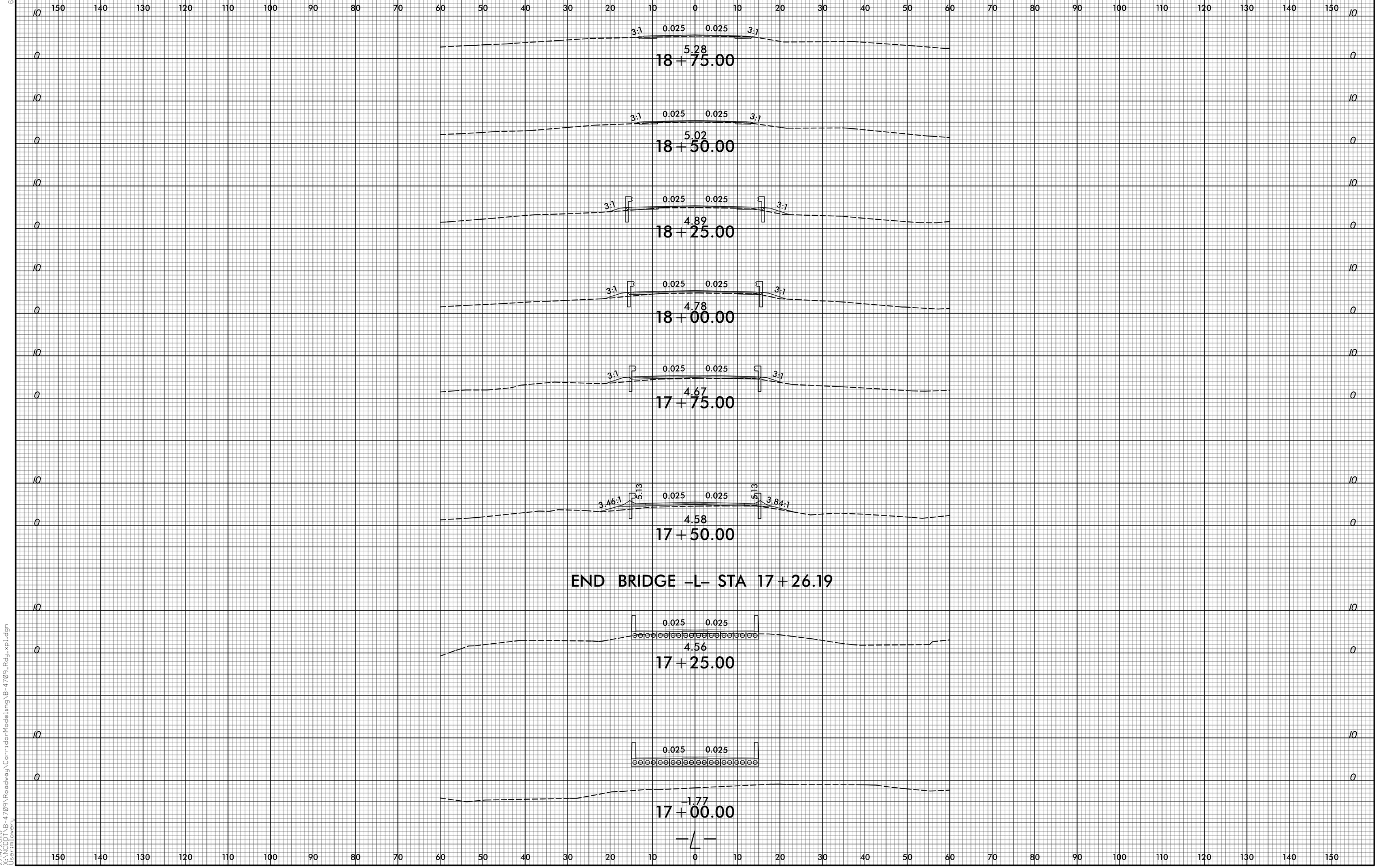

6/23/16

2/14/2020
X:\NCDOT\B-4709\Roadway\CorridorModeling\B-4709_Rdy_xpl.dgn
User:mlowery

6/23/16

0 5 10	PROJ. REFERENCE NO.	SHEET NO.
	17BP.2.R.95	X-4

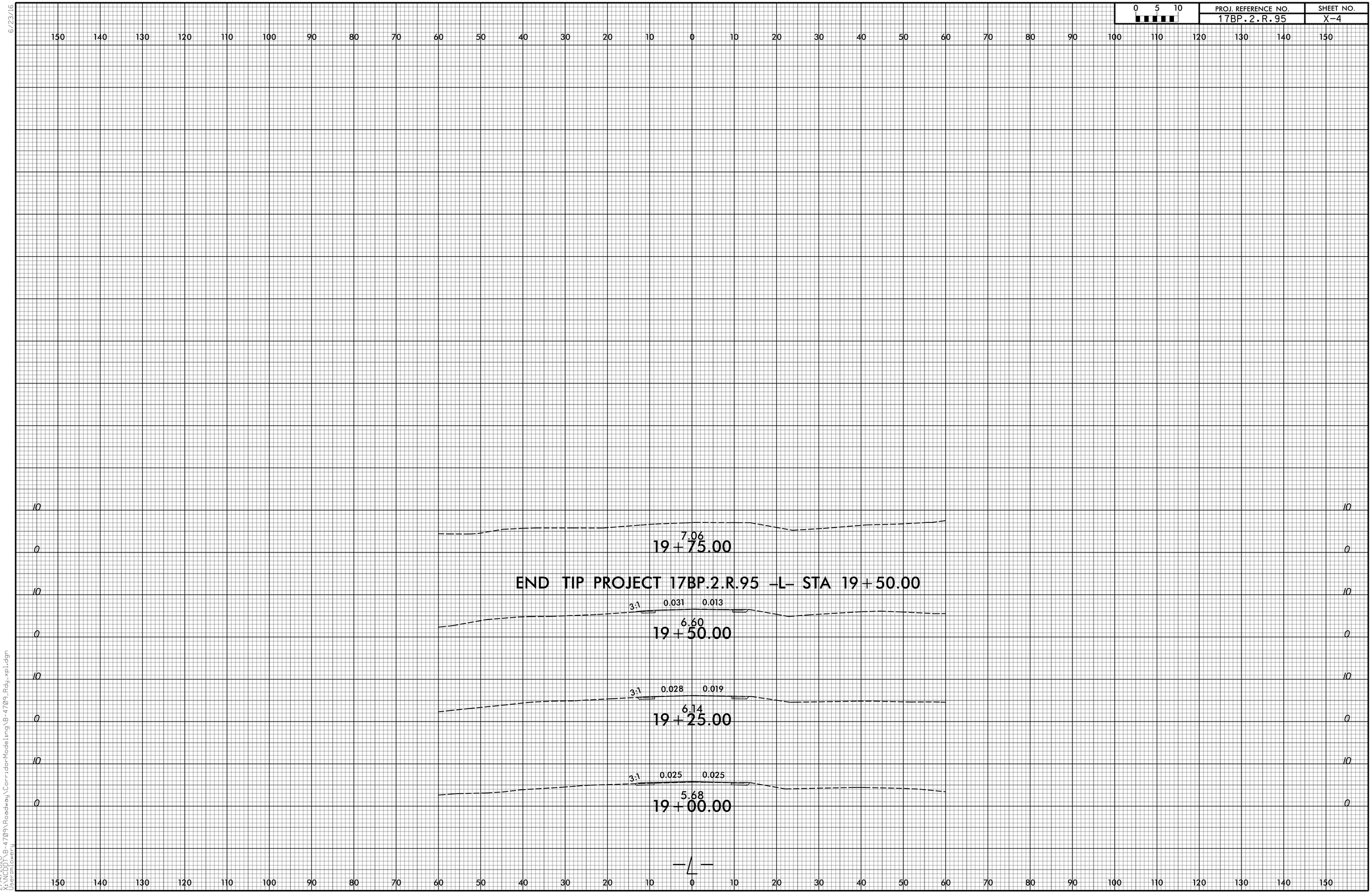

2/14/2020
X:\NCDOT\B-4709\Roadway\CorridorModeling\B-4709_Rdy_xpl.dgn
User:mlowery

DocuSign Envelope ID: 11FEA873-50EA-4A02-B448-8EAF94632600

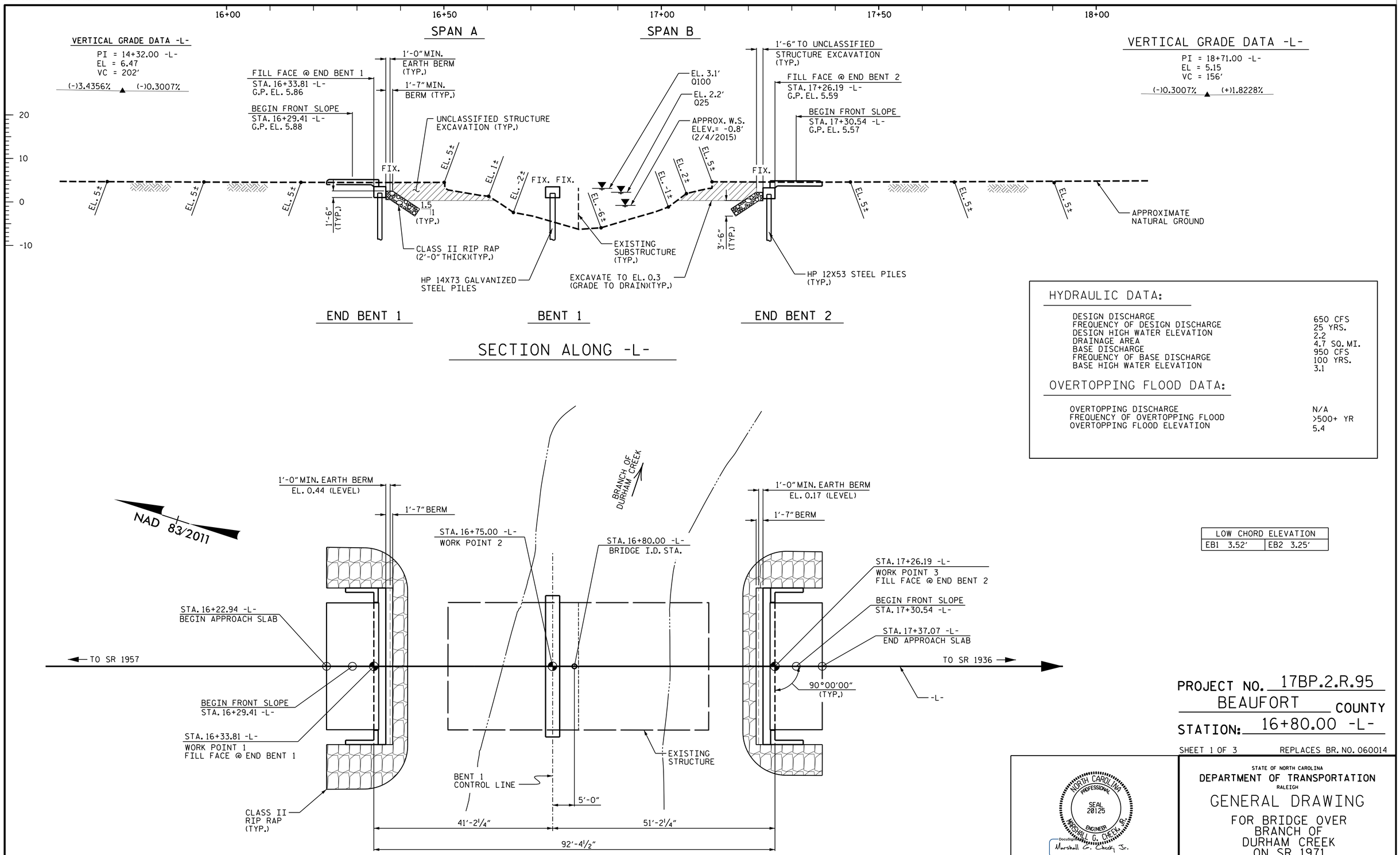

LOW CHORD ELEVATION	
EB1 3.52'	EB2 3.25'

PROJECT NO. 17BP.2.R.95
BEAUFORT COUNTY
STATION: 16+80.00 -L-

SHEET 1 OF 3 REPLACES BR. NO. 060014

NORTH CAROLINA PROFESSIONAL SEAL 20125 ENGINEER MARSHALL G. CHECKY, JR.

DocuSigned by: Marshall G. Checky Jr.
5FBCC2F3A4DC413...
10/14/2019

DOCUMENT NOT CONSIDERED FINAL UNLESS ALL SIGNATURES COMPLETED

TGS ENGINEERS
706 HILLSBOROUGH STREET
SUITE 200
RALEIGH, NC 27603
PH (919) 773-8887
CORP. LICENSE NO.: C-0275

STATE OF NORTH CAROLINA
DEPARTMENT OF TRANSPORTATION
RALEIGH

GENERAL DRAWING
FOR BRIDGE OVER BRANCH OF DURHAM CREEK ON SR 1971 BETWEEN SR 1957 AND SR 1936

REVISIONS						
NO.	BY:	DATE:	NO.	BY:	DATE:	
1			3			
2			4			

SHEET NO. S-1
TOTAL SHEETS 20

DRAWN BY :	TBE	DATE :	01/19
CHECKED BY :	MGC	DATE :	02/19

DocuSign Envelope ID: 11FEA873-50EA-4A02-B448-8EAF94632600

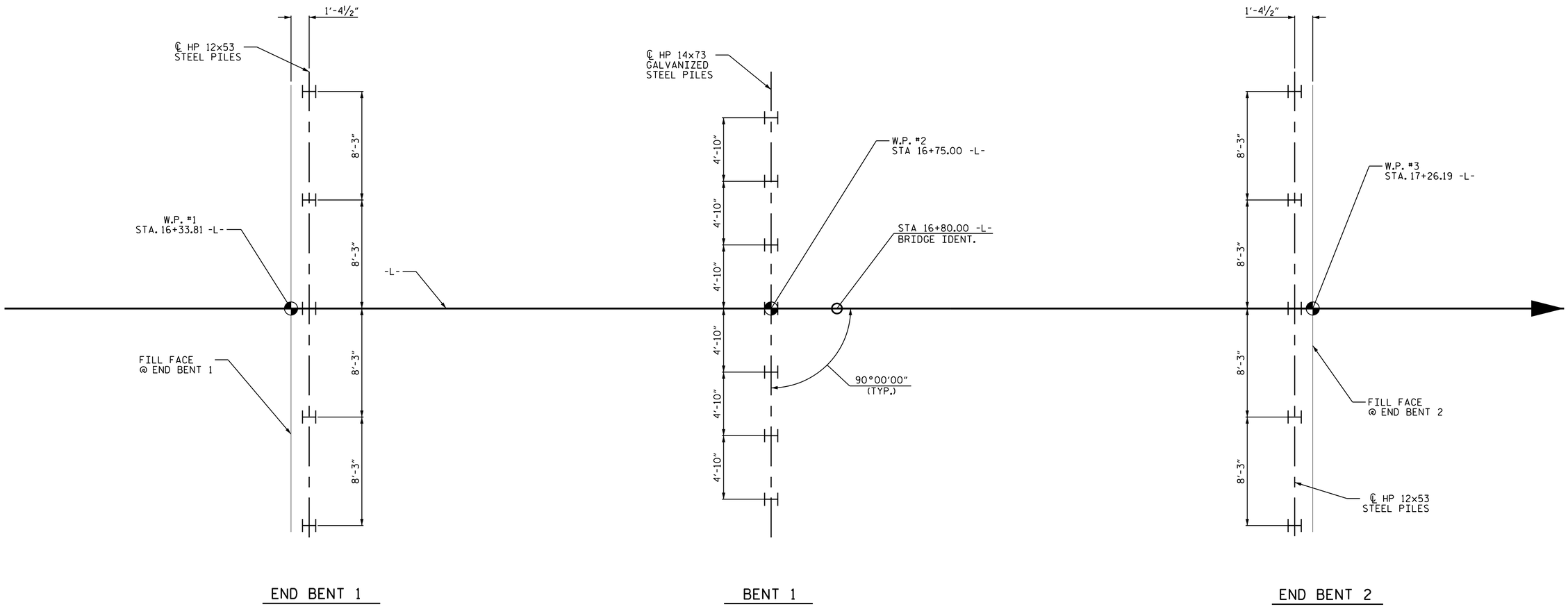

FOUNDATION LAYOUT PLAN

ALL END BENT PILES ARE HP 12x53 STEEL PILES. DIMENSIONS LOCATING PILES ARE SHOWN TO THE CENTERLINE OF PILES. ORIENT PILES AS SHOWN.

ALL BENT PILES ARE HP 14x73 GALVANIZED STEEL PILES.

FOUNDATION RECOMMENDATION NOTES

FOR PILES, SEE SECTION 450 OF THE STANDARD SPECIFICATIONS.

PILES AT END BENT NO. 1 AND END BENT NO. 2 ARE DESIGNED FOR A FACTORED RESISTANCE OF 70 TONS AND 81 TONS PER PILE, RESPECTIVELY.

DRIVE PILES AT END BENT NO. 1 AND END BENT NO. 2 TO A REQUIRED DRIVING RESISTANCE OF 120 TONS AND 135 TONS PER PILE, RESPECTIVELY.

PILES AT BENT NO. 1 ARE DESIGNED FOR A FACTORED RESISTANCE OF 100 TONS PER PILE.

DRIVE PILES AT BENT NO. 1 TO A REQUIRED DRIVING RESISTANCE OF 175 TONS PER PILE. THIS REQUIRED DRIVING RESISTANCE INCLUDES ADDITIONAL RESISTANCE FOR DOWNDRAG OR SCOUR.

INSTALL PILES AT BENT NO. 1 TO A TIP ELEVATION NO HIGHER THAN -45.

THE SCOUR CRITICAL ELEVATION FOR BENT NO. 1 IS ELEVATION -18. SCOUR CRITICAL ELEVATIONS ARE USED TO MONITOR POSSIBLE SCOUR PROBLEMS DURING THE LIFE OF THE STRUCTURE.

TESTING PILES WITH THE PDA DURING DRIVING, RESTRIKING OR REDRIVING MAY BE REQUIRED. THE ENGINEER WILL DETERMINE THE NEED FOR PDA TESTING. FOR PDA TESTING, SEE SECTION 450 OF THE STANDARD SPECIFICATIONS.

PROJECT NO. 17BP.2.R.95
BEAUFORT COUNTY
STATION: 16+80.00 -L-

SHEET 2 OF 3

NORTH CAROLINA PROFESSIONAL SEAL 20125 ENGINEER MARSHALL G. CHECK, JR.

Marshall G. Check Jr.
5FBCC2F3A4DC413...
10/14/2019

DOCUMENT NOT CONSIDERED FINAL UNLESS ALL SIGNATURES COMPLETED

TGS ENGINEERS
706 HILLSBOROUGH STREET
SUITE 200
RALEIGH, NC 27603
PH (919) 773-8887
CORP. LICENSE NO.: C-0275

STATE OF NORTH CAROLINA
DEPARTMENT OF TRANSPORTATION
RALEIGH

GENERAL DRAWING
FOR BRIDGE OVER
BRANCH OF
DURHAM CREEK
ON SR 1971
BETWEEN SR 1957 AND SR 1936

REVISIONS							
NO.	BY:	DATE:	NO.	BY:	DATE:	SHEET NO.	
1			3			S-2	
2			4			TOTAL SHEETS	
						20	

DRAWN BY :	STM	DATE :	01/19
CHECKED BY :	MGC	DATE :	02/19
DESIGN ENGINEER OF RECORD:	MGC	DATE :	07/19

9/24/2019
X:\NCDOT\B-4709\Structures\FinalPlans\DGNs\401_005_B-4709_SMU_ GD2_060014.dgn
Usersmassinople

DocuSign Envelope ID: 11FEA873-50EA-4A02-B448-8EAF94632600

BM #1: RR SPIKE IN BASE OF 18"HARDWOOD, 90' LT OF BL STA. 24+52, ELEV. 18.16

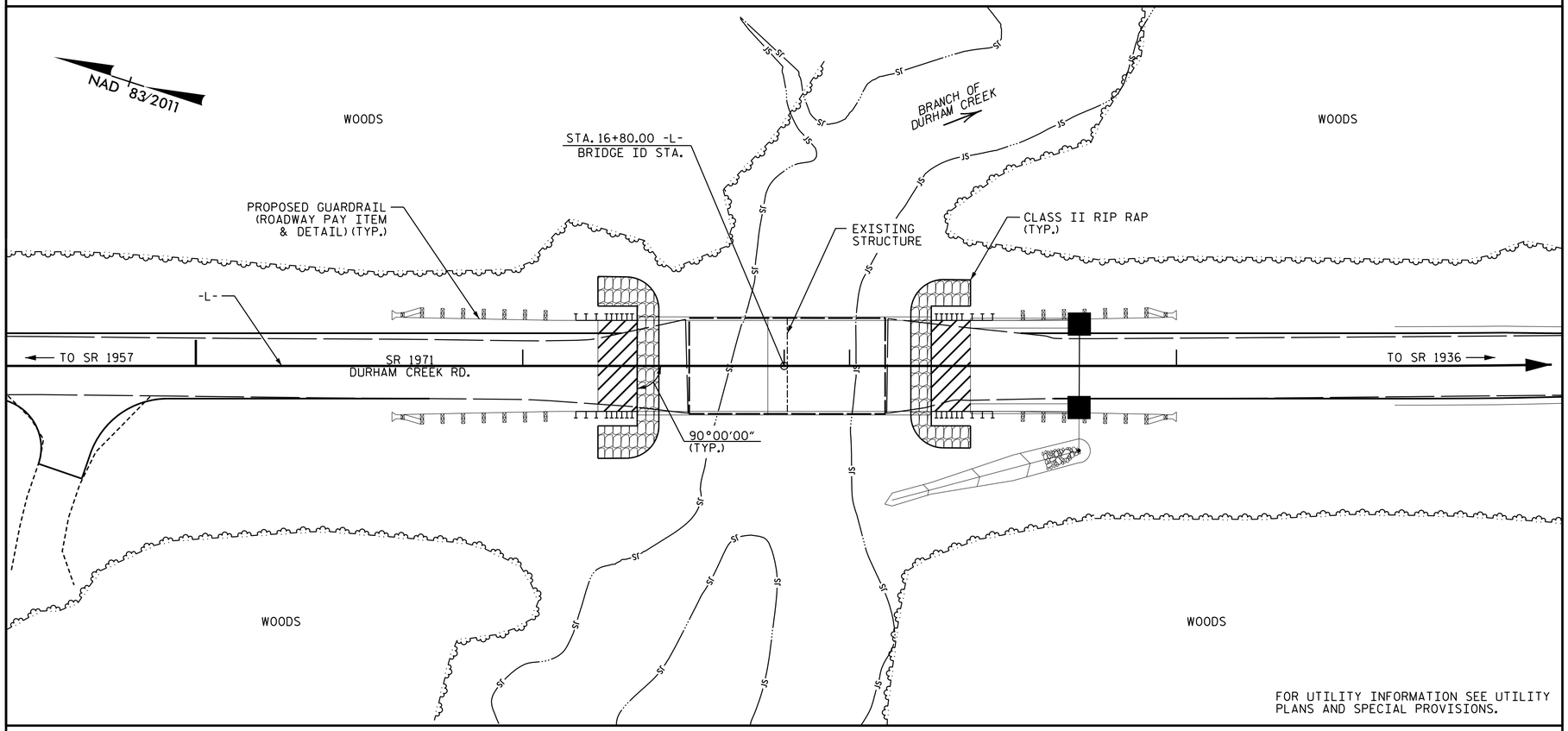

LOCATION SKETCH

NOTES:

ASSUMED LIVE LOAD = HL-93 OR ALTERNATE LOADING.

THIS BRIDGE HAS BEEN DESIGNED IN ACCORDANCE WITH THE AASHTO LRFD BRIDGE DESIGN SPECIFICATIONS.

THIS BRIDGE IS LOCATED IN SEISMIC ZONE 1.

FOR OTHER DESIGN DATA AND GENERAL NOTES, SEE SHEET SN (S-20).

FOR EROSION CONTROL MEASURES, SEE EROSION CONTROL PLANS.

AFTER SERVING AS A TEMPORARY STRUCTURE, THE EXISTING 2 SPAN (2 @ 30'-6") WITH A SUPERSTRUCTURE CONSISTING OF PRESTRESSED CONCRETE CHANNELS AND A SUBSTRUCTURE CONSISTING OF PRESTRESSED CONCRETE CAPS ON TIMBER PILES AND LOCATED AT THE SITE OF THE PROPOSED BRIDGE SHALL BE REMOVED. THE EXISTING BRIDGE IS PRESENTLY POSTED FOR LOAD LIMIT. SHOULD THE STRUCTURAL INTEGRITY OF THE BRIDGE DETERIORATE DURING CONSTRUCTION OF THE PROPOSED BRIDGE, THIS LOAD LIMIT MAY BE REDUCED AS FOUND NECESSARY DURING THE LIFE OF THIS PROJECT.

REMOVAL OF THE EXISTING BRIDGE SHALL BE PERFORMED IN A MANNER THAT PREVENTS DEBRIS FROM FALLING INTO WATER. THE CONTRACTOR SHALL SUBMIT DEMOLITION PLANS FOR REVIEW AND REMOVE THE BRIDGE IN ACCORDANCE WITH ARTICLE 402-2 OF THE STANDARD SPECIFICATIONS.

THE MATERIAL SHOWN IN THE HATCHED AREA (SEE SHEET S-1) SHALL BE EXCAVATED FOR A DISTANCE OF 35 FT (LT) AND 30 FT (RT) AT END BENT 1 AND A DISTANCE OF 30 FT (LT) AND 30 FT (RT) AT END BENT 2 EACH SIDE OF THE CENTERLINE OF THE BRIDGE AS DIRECTED BY THE ENGINEER. THIS WORK WILL BE PAID FOR AT THE CONTRACT LUMP SUM PRICE FOR UNCLASSIFIED STRUCTURE EXCAVATION, SEE SECTION 412 OF THE STANDARD SPECIFICATIONS.

THIS BRIDGE SHALL BE CONSTRUCTED USING TOP-DOWN CONSTRUCTION METHODS. THE USE OF A TEMPORARY CAUSEWAY OR WORK BRIDGE IS NOT PERMITTED.

THE SUBSTRUCTURE OF THE EXISTING BRIDGE INDICATED ON THE PLANS IS FROM THE BEST INFORMATION AVAILABLE. THIS INFORMATION IS SHOWN FOR THE CONVENIENCE OF THE CONTRACTOR. THE CONTRACTOR SHALL HAVE NO CLAIM WHATSOEVER AGAINST THE DEPARTMENT OF TRANSPORTATION FOR ANY DELAYS OR ADDITIONAL COST INCURRED BASED ON DIFFERENCES BETWEEN THE EXISTING BRIDGE SUBSTRUCTURE SHOWN ON THE PLANS AND THE ACTUAL CONDITIONS AT THE PROJECT SITE.

ASPHALT WEARING SURFACE IS INCLUDED IN ROADWAY QUANTITIES ON ROADWAY PLANS.

THIS STRUCTURE HAS BEEN DESIGNED IN ACCORDANCE WITH HEC 18, "EVALUATING SCOUR AT BRIDGES".

FOR GROUT FOR STRUCTURES, SEE SPECIAL PROVISIONS.

FOR FALSEWORK AND FORMWORK, SEE SPECIAL PROVISIONS.

FOR SUBMITTAL OF WORKING DRAWINGS, SEE SPECIAL PROVISIONS.

FOR CRANE SAFETY, SEE SPECIAL PROVISIONS.

FOR ASBESTOS ASSESSMENT FOR BRIDGE DEMOLITION AND RENOVATION ACTIVITIES, SEE SPECIAL PROVISIONS.

FOR FIBER OPTIC CONDUIT SYSTEM, SEE SPECIAL PROVISIONS.

THIS STRUCTURE CONTAINS THE NECESSARY CORROSION PROTECTION REQUIRED FOR A CORROSIVE SITE.

CLASS AA CONCRETE SHALL BE USED IN ALL CAST-IN-PLACE BENT CAPS AND SHALL CONTAIN CALCIUM NITRITE CORROSION INHIBITOR.

ALL BAR SUPPORTS USED IN THE BARRIER RAIL, BENT CAPS, AND ALL INCIDENTAL REINFORCING STEEL SHALL BE EPOXY COATED IN ACCORDANCE WITH THE STANDARD SPECIFICATIONS.

PRESTRESSED CONCRETE CORED SLAB UNITS SHALL CONTAIN CALCIUM NITRITE CORROSION INHIBITOR.

TOTAL BILL OF MATERIAL

ITEM	REMOVAL OF EXISTING STRUCTURE	ASBESTOS ASSESSMENT	PDA TESTING	UNCLASSIFIED STRUCTURE EXCAVATION	CLASS "AA" CONCRETE	BRIDGE APPROACH SLABS	EPOXY COATED REINFORCING STEEL	PILE DRIVING EQUIPMENT SETUP FOR HP 12x53 STEEL PILES	PILE DRIVING EQUIPMENT SETUP FOR HP 14x73 GALVANIZED STEEL PILES	HP 12X53 STEEL PILES		HP 14X73 GALVANIZED STEEL PILES		PILE REDRIVES
	LUMP SUM	LUMP SUM	EACH	LUMP SUM	C.Y.	LUMP SUM	LBS.	EACH	EACH	NO.	LIN. FT.	NO.	LIN. FT.	EACH
SUPERSTRUCTURE														
END BENT 1					13.0		1,914	5		5	325			3
BENT 1					9.8		1,897		7			7	525	4
END BENT 2					13.0		1,914	5		5	350			3
TOTALS	LUMP SUM	LUMP SUM	1	LUMP SUM	35.8	LUMP SUM	5,725	10	7	10	675	7	525	10

TOTAL BILL OF MATERIAL

ITEM	VERTICAL CONCRETE BARRIER RAIL	RIP RAP CLASS II (2'-0" THK.)	GEOTEXTILE FOR DRAINAGE	ELASTOMERIC BEARINGS	3'-0" x 1'-9" PRESTRESSED CONCRETE CORED SLABS		FIBER OPTIC CONDUIT SYSTEM
	LIN. FT.	TONS	SQ. YDS.	LUMP SUM	NO.	LIN. FT.	LIN. FT.
SUPERSTRUCTURE	180.25				20	900.00	176.25
END BENT 1		120	135				
BENT 1							
END BENT 2		110	125				
TOTALS	180.25	230	260	LUMP SUM	20	900.00	176.25

PROJECT NO. 17BP.2.R.95
BEAUFORT COUNTY
STATION: 16+80.00 -L-

SHEET 3 OF 3

NORTH CAROLINA PROFESSIONAL SEAL 20125 ENGINEER MARSHALL C. CHECK, JR.

DocuSigned by: Marshall C. Check, Jr. 5FBCC2F3A4DC413... 10/14/2019

DOCUMENT NOT CONSIDERED FINAL UNLESS ALL SIGNATURES COMPLETED

TGS ENGINEERS
706 HILLSBOROUGH STREET
SUITE 200
RALEIGH, NC 27603
PH (919) 773-8887
CORP. LICENSE NO.: C-0275

STATE OF NORTH CAROLINA
DEPARTMENT OF TRANSPORTATION
RALEIGH

GENERAL DRAWING
FOR BRIDGE OVER BRANCH OF DURHAM CREEK ON SR 1971 BETWEEN SR 1957 AND SR 1936

REVISIONS						SHEET NO.
NO.	BY:	DATE:	NO.	BY:	DATE:	S-3
1			3			TOTAL SHEETS
2			4			20

DRAWN BY :	STM	DATE :	01/19
CHECKED BY :	MGC	DATE :	02/19

DocuSign Envelope ID: 11FEA873-50EA-4A02-B448-8EAF94632600

LOAD AND RESISTANCE FACTOR RATING (LRFD) SUMMARY FOR PRESTRESSED CONCRETE GIRDERS

LEVEL		VEHICLE	WEIGHT (W) (TONS)	CONTROLLING LOAD RATING	MINIMUM RATING FACTORS (RF)	TONS = W X RF	STRENGTH I LIMIT STATE											SERVICE III LIMIT STATE						COMMENT NUMBER
							LIVELOAD FACTORS	MOMENT					SHEAR					LIVELOAD FACTORS	MOMENT					
								DISTRIBUTION FACTORS (DF)	RATING FACTOR	SPAN	GIRDER LOCATION	DISTANCE FROM LEFT END OF SPAN (ft)	DISTRIBUTION FACTORS (DF)	RATING FACTOR	SPAN	GIRDER LOCATION	DISTANCE FROM LEFT END OF SPAN (ft)		DISTRIBUTION FACTORS (DF)	RATING FACTOR	SPAN	GIRDER LOCATION	DISTANCE FROM LEFT END OF SPAN (ft)	
DESIGN LOAD RATING		HL-93(Inv)	N/A	1	1.319	--	1.75	0.278	1.76	40'	EL	19.5	0.549	**1.32**	40'	EL	**1.95**	0.80	0.278	1.55	40'	EL	19.5	
		HL-93(Opr)	N/A	--	1.709	--	1.35	0.278	2.28	40'	EL	19.5	0.549	1.71	40'	EL	1.95	N/A	--	--	--	--	--	
		HS-20(Inv)	36.000	2	1.540	55.449	1.75	0.278	2.21	40'	EL	19.5	0.549	**1.54**	40'	EL	**1.95**	0.80	0.278	1.94	40'	EL	19.5	
		HS-20(Opr)	36.000	--	1.997	71.878	1.35	0.278	2.86	40'	EL	19.5	0.549	2	40'	EL	1.95	N/A	--	--	--	--	--	
LEGAL LOAD RATING	SV	SNSH	13.500	--	3.606	48.687	1.4	0.278	5.1	40'	EL	19.5	0.549	4.13	40'	EL	1.95	0.80	0.278	3.61	40'	EL	19.5	
		SNGARBS2	20.000	--	2.964	59.289	1.4	0.278	4.19	40'	EL	15.6	0.549	3.07	40'	EL	1.95	0.80	0.278	2.96	40'	EL	19.5	
		SNAGRIS2	22.000	--	2.906	63.929	1.4	0.278	4.09	40'	EL	15.6	0.549	2.91	40'	EL	1.95	0.80	0.278	2.92	40'	EL	15.6	
		SNCOTTS3	27.250	--	1.803	49.125	1.4	0.278	2.55	40'	EL	19.5	0.549	2.07	40'	EL	1.95	0.80	0.278	1.80	40'	EL	19.5	
		SNAGGRS4	34.925	--	1.623	56.667	1.4	0.278	2.29	40'	EL	19.5	0.549	1.82	40'	EL	1.95	0.80	0.278	1.62	40'	EL	19.5	
		SNS5A	35.550	--	1.578	56.107	1.4	0.278	2.23	40'	EL	19.5	0.549	1.9	40'	EL	1.95	0.80	0.278	1.58	40'	EL	19.5	
		SNS6A	39.950	--	1.502	59.992	1.4	0.278	2.12	40'	EL	19.5	0.549	1.77	40'	EL	1.95	0.80	0.278	1.50	40'	EL	19.5	
		SNS7B	42.000	3	1.432	60.149	1.4	0.278	2.02	40'	EL	19.5	0.549	1.81	40'	EL	1.95	0.80	0.278	**1.43**	40'	EL	**19.5**	
	TTST	TNAGRIT3	33.000	--	1.848	60.976	1.4	0.278	2.61	40'	EL	19.5	0.549	2.08	40'	EL	1.95	0.80	0.278	1.85	40'	EL	19.5	
		TNT4A	33.075	--	1.872	61.901	1.4	0.278	2.65	40'	EL	19.5	0.549	1.98	40'	EL	1.95	0.80	0.278	1.87	40'	EL	19.5	
		TNT6A	41.600	--	1.587	66.032	1.4	0.278	2.24	40'	EL	19.5	0.549	1.94	40'	EL	1.95	0.80	0.278	1.59	40'	EL	19.5	
		TNT7A	42.000	--	1.627	68.354	1.4	0.278	2.3	40'	EL	19.5	0.549	1.79	40'	EL	1.95	0.80	0.278	1.63	40'	EL	19.5	
		TNT7B	42.000	--	1.664	69.888	1.4	0.278	2.35	40'	EL	19.5	0.549	1.72	40'	EL	1.95	0.80	0.278	1.66	40'	EL	19.5	
		TNAGRIT4	43.000	--	1.619	69.61	1.4	0.278	2.28	40'	EL	15.6	0.549	1.65	40'	EL	1.95	0.80	0.278	1.62	40'	EL	19.5	
		TNAGT5A	45.000	--	1.498	67.412	1.4	0.278	2.12	40'	EL	19.5	0.549	1.71	40'	EL	1.95	0.80	0.278	1.50	40'	EL	19.5	
		TNAGT5B	45.000	--	1.455	65.486	1.4	0.278	2.06	40'	EL	19.5	0.549	1.56	40'	EL	1.95	0.80	0.278	1.46	40'	EL	19.5	

LOAD FACTORS:

DESIGN LOAD RATING FACTORS	LIMIT STATE	γ_{DC}	γ_{DW}
	STRENGTH I	1.25	1.50
	SERVICE III	1.00	1.00

NOTES:

MINIMUM RATING FACTORS ARE BASED ON THE STRENGTH I AND SERVICE III LIMIT STATES.

ALLOWABLE STRESSES FOR SERVICE III LIMIT STATE ARE AS REQUIRED FOR DESIGN.

COMMENTS:

1.
2.
3.
4.

CONTROLLING LOAD RATING

(1) DESIGN LOAD RATING (HL-93)

(2) DESIGN LOAD RATING (HS-20)

(3) LEGAL LOAD RATING **

** SEE CHART FOR VEHICLE TYPE

GIRDER LOCATION

I - INTERIOR GIRDER
EL - EXTERIOR LEFT GIRDER
ER - EXTERIOR RIGHT GIRDER

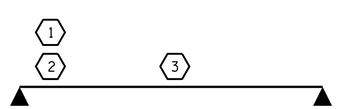

LRFR SUMMARY

FOR SPAN 'A'

PROJECT NO. 17BP.2.R.95
BEAUFORT COUNTY
STATION: 16+80.00 -L-

SHEET 1 OF 2

NORTH CAROLINA PROFESSIONAL SEAL 20125 ENGINEER MARSHALL G. CHECKY, JR.

Marshall G. Checky Jr.
5FBCC2F3A4DC413...
10/14/2019

DOCUMENT NOT CONSIDERED FINAL UNLESS ALL SIGNATURES COMPLETED

TGS ENGINEERS
706 HILLSBOROUGH STREET
SUITE 200
RALEIGH, NC 27603
PH (919) 773-8887
CORP. LICENSE NO.: C-0275

STATE OF NORTH CAROLINA
DEPARTMENT OF TRANSPORTATION
RALEIGH

STANDARD
LRFR SUMMARY FOR
40' CORED SLAB UNIT
90° SKEW
(NON-INTERSTATE TRAFFIC)

REVISIONS						SHEET NO.
NO.	BY:	DATE:	NO.	BY:	DATE:	S-4
1			3			TOTAL SHEETS
2			4			20

ASSEMBLED BY :	STM	DATE :	01/19
CHECKED BY :	MGC	DATE :	02/19
DRAWN BY : CVC	6/10		
CHECKED BY : DNS	6/10		

9/24/2019
X:\NCDOT\B-4709\Structures\FinalPlans\DGNs\401_009_B-4709_SMU_ LRFR1_060014.dgn
User:smassinople

STD. NO. 21LRFR1_90S_40L

DocuSign Envelope ID: 11FEA873-50EA-4A02-B448-8EAF94632600

LOAD AND RESISTANCE FACTOR RATING (LRFD) SUMMARY FOR PRESTRESSED CONCRETE GIRDERS

LEVEL		VEHICLE	WEIGHT (W) (TONS)	CONTROLLING LOAD RATING	MINIMUM RATING FACTORS (RF)	TONS = W X RF	STRENGTH I LIMIT STATE											SERVICE III LIMIT STATE						COMMENT NUMBER
							LIVELOAD FACTORS	MOMENT					SHEAR					LIVELOAD FACTORS	MOMENT					
								DISTRIBUTION FACTORS (DF)	RATING FACTOR	SPAN	GIRDER LOCATION	DISTANCE FROM LEFT END OF SPAN (ft)	DISTRIBUTION FACTORS (DF)	RATING FACTOR	SPAN	GIRDER LOCATION	DISTANCE FROM LEFT END OF SPAN (ft)		DISTRIBUTION FACTORS (DF)	RATING FACTOR	SPAN	GIRDER LOCATION	DISTANCE FROM LEFT END OF SPAN (ft)	
DESIGN LOAD RATING		HL-93(Inv)	N/A	1	1.394	--	1.75	0.276	1.57	50'	EL	24.5	0.531	**1.39**	50'	EL	**2.45**	0.80	0.276	1.44	50'	EL	24.5	
		HL-93(Opr)	N/A	--	1.807	--	1.35	0.276	2.03	50'	EL	24.5	0.531	1.81	50'	EL	2.45	N/A	--	--	--	--	--	
		HS-20(Inv)	36.000	2	1.667	60.007	1.75	0.276	1.95	50'	EL	24.5	0.531	**1.67**	50'	EL	**2.45**	0.80	0.276	1.79	50'	EL	24.5	
		HS-20(Opr)	36.000	--	2.161	77.787	1.35	0.276	2.52	50'	EL	24.5	0.531	2.16	50'	EL	2.45	N/A	--	--	--	--	--	
LEGAL LOAD RATING	SV	SNSH	13.500	--	3.635	49.079	1.4	0.276	4.95	50'	EL	24.5	0.531	4.7	50'	EL	2.45	0.80	0.276	3.64	50'	EL	24.5	
		SNGARBS2	20.000	--	2.871	57.42	1.4	0.276	3.91	50'	EL	24.5	0.531	3.42	50'	EL	2.45	0.80	0.276	2.87	50'	EL	24.5	
		SNAGRIS2	22.000	--	2.778	61.109	1.4	0.276	3.78	50'	EL	19.6	0.531	3.21	50'	EL	2.45	0.80	0.276	2.78	50'	EL	24.5	
		SNCOTTS3	27.250	--	1.814	49.418	1.4	0.276	2.47	50'	EL	24.5	0.531	2.36	50'	EL	2.45	0.80	0.276	1.81	50'	EL	24.5	
		SNAGGRS4	34.925	--	1.577	55.063	1.4	0.276	2.15	50'	EL	24.5	0.531	2.01	50'	EL	2.45	0.80	0.276	1.58	50'	EL	24.5	
		SNS5A	35.550	--	1.537	54.657	1.4	0.276	2.09	50'	EL	24.5	0.531	2.07	50'	EL	2.45	0.80	0.276	1.54	50'	EL	24.5	
		SNS6A	39.950	--	1.438	57.43	1.4	0.276	1.96	50'	EL	24.5	0.531	1.91	50'	EL	2.45	0.80	0.276	1.44	50'	EL	24.5	
		SNS7B	42.000	--	1.370	57.54	1.4	0.276	1.87	50'	EL	24.5	0.531	1.91	50'	EL	2.45	0.80	0.276	1.37	50'	EL	24.5	
	TTST	TNAGRIT3	33.000	--	1.761	58.118	1.4	0.276	2.4	50'	EL	24.5	0.531	2.25	50'	EL	2.45	0.80	0.276	1.76	50'	EL	24.5	
		TNT4A	33.075	--	1.777	58.759	1.4	0.276	2.42	50'	EL	24.5	0.531	2.17	50'	EL	2.45	0.80	0.276	1.78	50'	EL	24.5	
		TNT6A	41.600	--	1.480	61.558	1.4	0.276	2.01	50'	EL	24.5	0.531	2.08	50'	EL	2.45	0.80	0.276	1.48	50'	EL	24.5	
		TNT7A	42.000	--	1.502	63.087	1.4	0.276	2.05	50'	EL	24.5	0.531	1.94	50'	EL	2.45	0.80	0.276	1.50	50'	EL	24.5	
		TNT7B	42.000	--	1.566	65.773	1.4	0.276	2.13	50'	EL	24.5	0.531	1.84	50'	EL	2.45	0.80	0.276	1.57	50'	EL	24.5	
		TNAGRIT4	43.000	--	1.486	63.902	1.4	0.276	2.02	50'	EL	24.5	0.531	1.77	50'	EL	2.45	0.80	0.276	1.49	50'	EL	24.5	
		TNAGT5A	45.000	--	1.388	62.47	1.4	0.276	1.89	50'	EL	24.5	0.531	1.8	50'	EL	2.45	0.80	0.276	1.39	50'	EL	24.5	
		TNAGT5B	45.000	3	1.360	61.206	1.4	0.276	1.85	50'	EL	24.5	0.531	1.68	50'	EL	2.45	0.80	0.276	**1.36**	50'	EL	**24.5**	

LOAD FACTORS:

DESIGN LOAD RATING FACTORS	LIMIT STATE	γ_{DC}	γ_{DW}
	STRENGTH I	1.25	1.50
	SERVICE III	1.00	1.00

NOTES:

MINIMUM RATING FACTORS ARE BASED ON THE STRENGTH I AND SERVICE III LIMIT STATES.

ALLOWABLE STRESSES FOR SERVICE III LIMIT STATE ARE AS REQUIRED FOR DESIGN.

COMMENTS:

1.
2.
3.
4.

CONTROLLING LOAD RATING

(1) DESIGN LOAD RATING (HL-93)

(2) DESIGN LOAD RATING (HS-20)

(3) LEGAL LOAD RATING **

** SEE CHART FOR VEHICLE TYPE

GIRDER LOCATION

I - INTERIOR GIRDER
EL - EXTERIOR LEFT GIRDER
ER - EXTERIOR RIGHT GIRDER

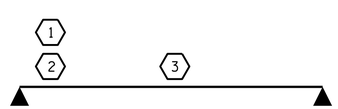

LRFR SUMMARY

FOR SPAN 'B'

PROJECT NO. 17BP.2.R.95
BEAUFORT COUNTY
STATION: 16+80.00 -L-

SHEET 2 OF 2

NORTH CAROLINA PROFESSIONAL SEAL 20125 ENGINEER MARSHALL G. CHECK, JR.

Marshall G. Check, Jr.
5FBCC2F3A4DC413...
10/14/2019

DOCUMENT NOT CONSIDERED FINAL UNLESS ALL SIGNATURES COMPLETED

TGS ENGINEERS
706 HILLSBOROUGH STREET
SUITE 200
RALEIGH, NC 27603
PH (919) 773-8887
CORP. LICENSE NO.: C-0275

STATE OF NORTH CAROLINA
DEPARTMENT OF TRANSPORTATION
RALEIGH

STANDARD
LRFR SUMMARY FOR 50' CORED SLAB UNIT 90° SKEW
(NON-INTERSTATE TRAFFIC)

REVISIONS						SHEET NO.
NO.	BY:	DATE:	NO.	BY:	DATE:	S-5
1			3			TOTAL SHEETS
2			4			20

ASSEMBLED BY :	STM	DATE :	01/19
CHECKED BY :	MGC	DATE :	02/19
DRAWN BY : CVC	6/10		
CHECKED BY : DNS	6/10		

9/24/2019
X:\NCDOT\B-4709\Structures\FinalPlans\DGNs\401_011_B-4709_SMU_ LRFR2_060014.dgn
User:smassinople

STD. NO. 21LRFR1_90S_50L

DocuSign Envelope ID: 11FEA873-50EA-4A02-B448-8EAF94632600

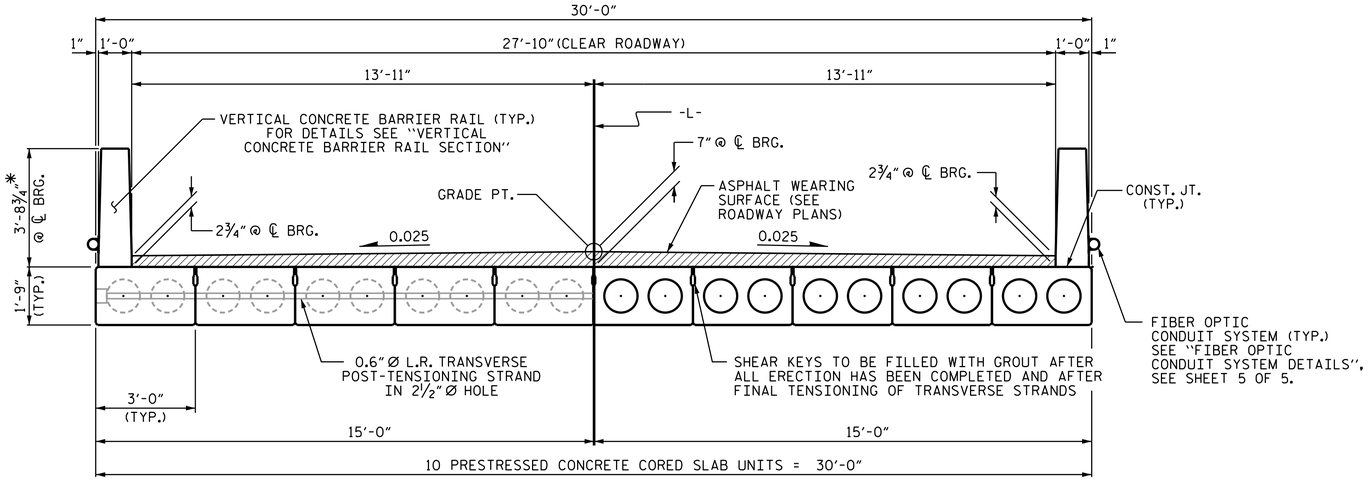

HALF SECTION
AT INTERMEDIATE DIAPHRAGMS

HALF SECTION
THROUGH VOIDS

TYPICAL SECTION

* - THE MAXIMUM BARRIER RAIL HEIGHT AND ASPHALT THICKNESS IS SHOWN. THE HEIGHT OF THE BARRIER RAIL AND ASPHALT THICKNESS VARIES WHILE THE TOP OF THE BARRIER RAIL FOLLOWS THE PROFILE OF THE GUTTERLINE. FOR RAIL HEIGHT DETAILS AND ASPHALT THICKNESS SEE THE "VERTICAL CONCRETE BARRIER RAIL SECTION" DETAIL.

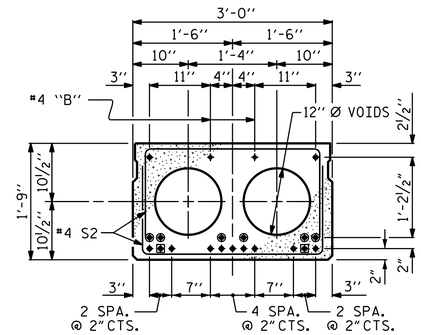

INTERIOR SLAB SECTION (40' UNIT)

(13 STRANDS REQUIRED)

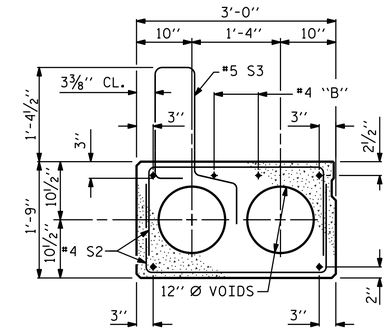

EXT. SLAB SECTION

(FOR PRESTRESSED STRAND LAYOUT, SEE INTERIOR SLAB SECTION.)

▲ BOND SHALL BE BROKEN ON THESE STRANDS FOR A DISTANCE OF 6'-0" FROM END OF CORED SLAB UNIT. SEE STANDARD SPECIFICATIONS, ARTICLE 1078-7.

■ BOND SHALL BE BROKEN ON THESE STRANDS FOR A DISTANCE OF 2'-0" FROM END OF CORED SLAB UNIT. SEE STANDARD SPECIFICATIONS, ARTICLE 1078-7.

● OPTIONAL FULL LENGTH DEBONDED STRANDS. THESE STRANDS ARE NOT REQUIRED. IF THE FABRICATOR CHOOSES TO INCLUDE THESE STRANDS IN THE CORED SLAB UNIT, THE STRANDS SHALL BE DEBONDED FOR THE FULL LENGTH OF THE UNIT AT NO ADDITIONAL COST. SEE STANDARD SPECIFICATIONS, ARTICLE 1078-7.

DEBONDING LEGEND

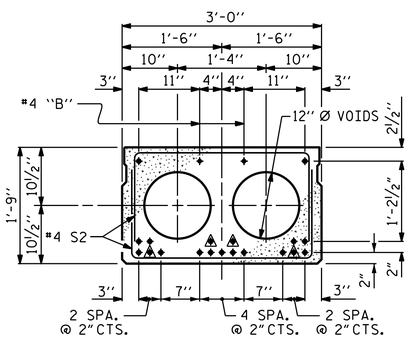

INTERIOR SLAB SECTION (50' UNIT)

(19 STRANDS REQUIRED)

0.6" Ø LOW RELAXATION STRAND LAYOUT

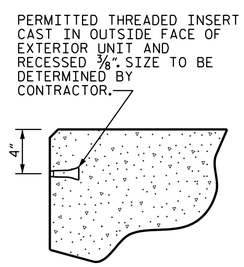

THREADED INSERT DETAIL

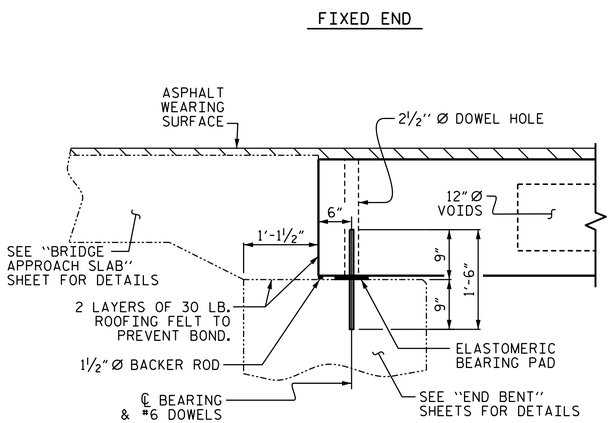

SECTION AT END BENT

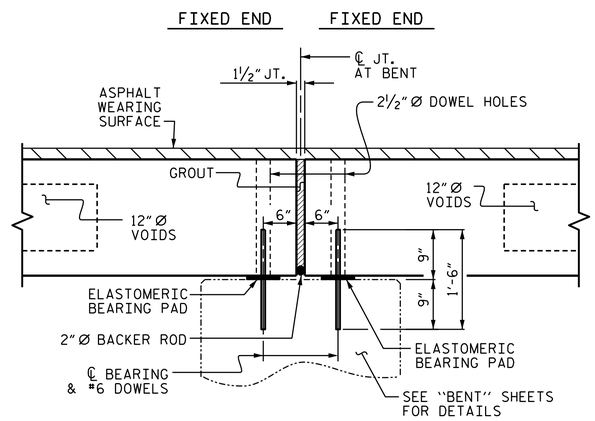

SECTION AT BENT

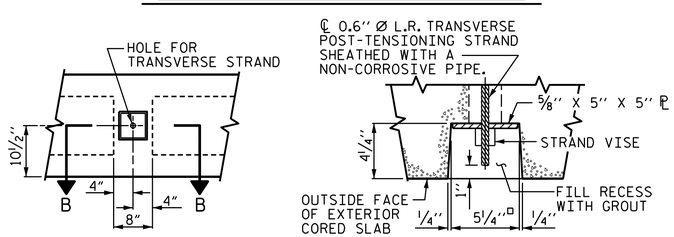

ELEVATION VIEW

SECTION B-B

GROUTED RECESS AT END OF POST-TENSIONED STRAND OF CORED SLABS

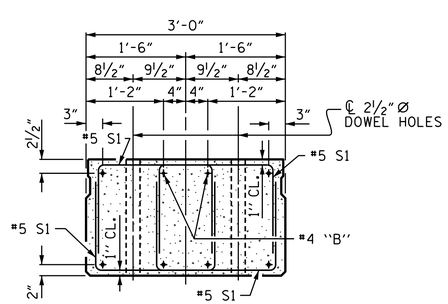

END ELEVATION

SHOWING PLACEMENT OF DOUBLE STIRRUPS AND LOCATION OF DOWEL HOLES. (STRAND LAYOUT NOT SHOWN.) INTERIOR SLAB UNIT SHOWN-EXTERIOR SLAB UNIT SIMILAR EXCEPT SHEAR KEY LOCATION.

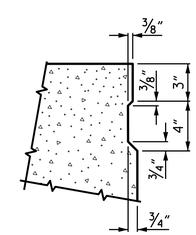

SHEAR KEY DETAIL

NOTE: OMIT SHEAR KEY ON OUTSIDE FACE OF EXTERIOR CORED SLABS.

PROJECT NO. 17BP.2.R.95
BEAUFORT COUNTY
STATION: 16+80.00 -L-

SHEET 1 OF 5

ASSEMBLED BY : STM	DATE : 01/19		
CHECKED BY : MGC	DATE : 02/19		
DRAWN BY : DGE 5/09	REV. 8/14	MAA/TMG	
CHECKED BY : BCH 6/09			

NORTH CAROLINA PROFESSIONAL SEAL 20125 ENGINEER MARSHALL C. CHEEK, JR.
DocuSigned by: Marshall C. Cheek, Jr.
5FBCC2F3A4DC413...
10/14/2019

DOCUMENT NOT CONSIDERED FINAL UNLESS ALL SIGNATURES COMPLETED

TGS ENGINEERS
706 HILLSBOROUGH STREET
SUITE 200
RALEIGH, NC 27603
PH (919) 773-8887
CORP. LICENSE NO.: C-0275

STATE OF NORTH CAROLINA
DEPARTMENT OF TRANSPORTATION
RALEIGH

STANDARD
3'-0" X 1'-9"
PRESTRESSED CONCRETE CORED SLAB UNIT
90° SKEW

REVISIONS								SHEET NO.
NO.	BY:	DATE:	NO.	BY:	DATE:			S-6
1			3					TOTAL SHEETS
2			4					20

STD. NO. 21" PCS2_30_90S

10/8/2019
X:\NCDOT\B-4709\Structures\Final Plans\DGNs\401_013_B-4709_SMU_ CS1_060014.dgn
User:smassinople

DocuSign Envelope ID: 11FEA873-50EA-4A02-B448-8EAF94632600

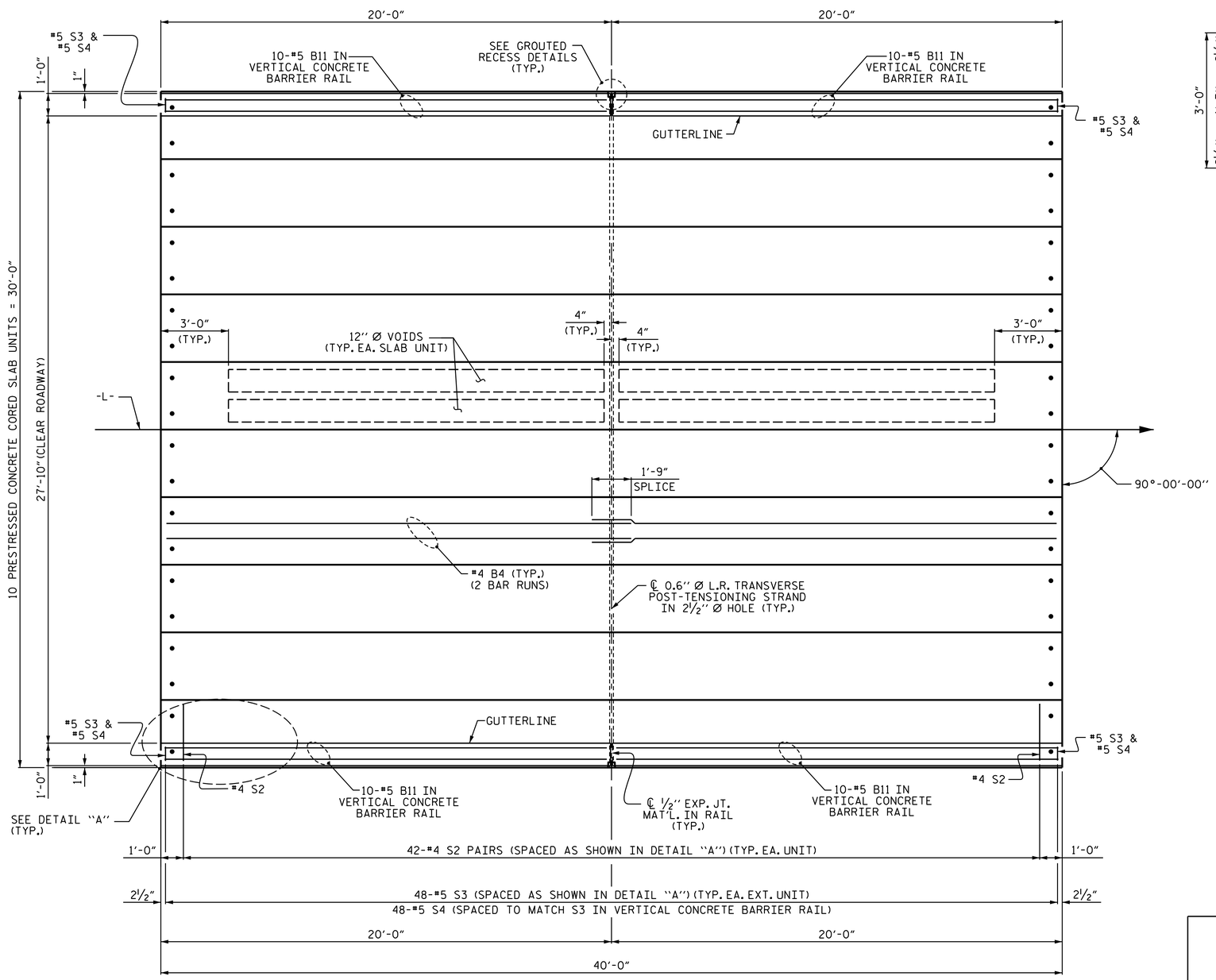

PLAN OF UNIT

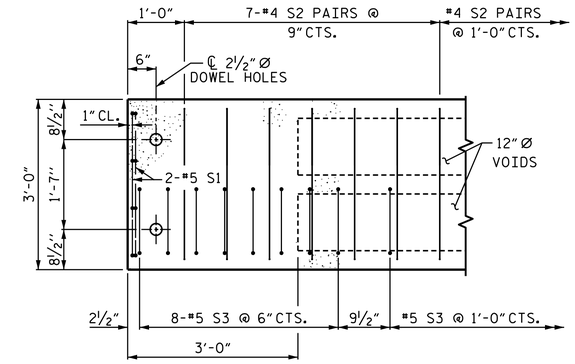

DETAIL "A"

(TYPICAL EACH END OF UNIT)
NOTE: EXTERIOR UNIT SHOWN - INTERIOR UNIT SIMILAR EXCEPT OMIT #5 S3 BARS.

PROJECT NO. 17BP.2.R.95
BEAUFORT COUNTY
STATION: 16+80.00 -L-

SHEET 2 OF 5

STATE OF NORTH CAROLINA
DEPARTMENT OF TRANSPORTATION
RALEIGH

PLAN OF 40' UNIT
27'-10" CLEAR ROADWAY
90° SKEW

NORTH CAROLINA PROFESSIONAL SEAL 20125 ENGINEER MARSHALL C. CHEEK, JR.

DocuSigned by: Marshall C. Cheek, Jr.
5FBCC2F3A4DC413...
10/14/2019

DOCUMENT NOT CONSIDERED FINAL UNLESS ALL SIGNATURES COMPLETED

TGS ENGINEERS
706 HILLSBOROUGH STREET
SUITE 200
RALEIGH, NC 27603
PH (919) 773-8887
CORP. LICENSE NO.: C-0275

REVISIONS						
NO.	BY:	DATE:	NO.	BY:	DATE:	
1			3			
2			4			

SHEET NO. S-7
TOTAL SHEETS 20

ASSEMBLED BY :	STM		DATE :	01/19
CHECKED BY :	MGC		DATE :	02/19
DRAWN BY : DGE	3/09	REV.	12/5/11	MAA/AAC
CHECKED BY : BCH	3/09	REV.	8/14	MAA/TMG

9/24/2019
X:\NCDOT\B-4709\Structures\FinalPlans\DGNs\401_015_B-4709_SMU_ CS2_060014.dgn
User:smassinople

STD. NO. 21"PCS_30_90S_40L

DocuSign Envelope ID: 11FEA873-50EA-4A02-B448-8EAF94632600

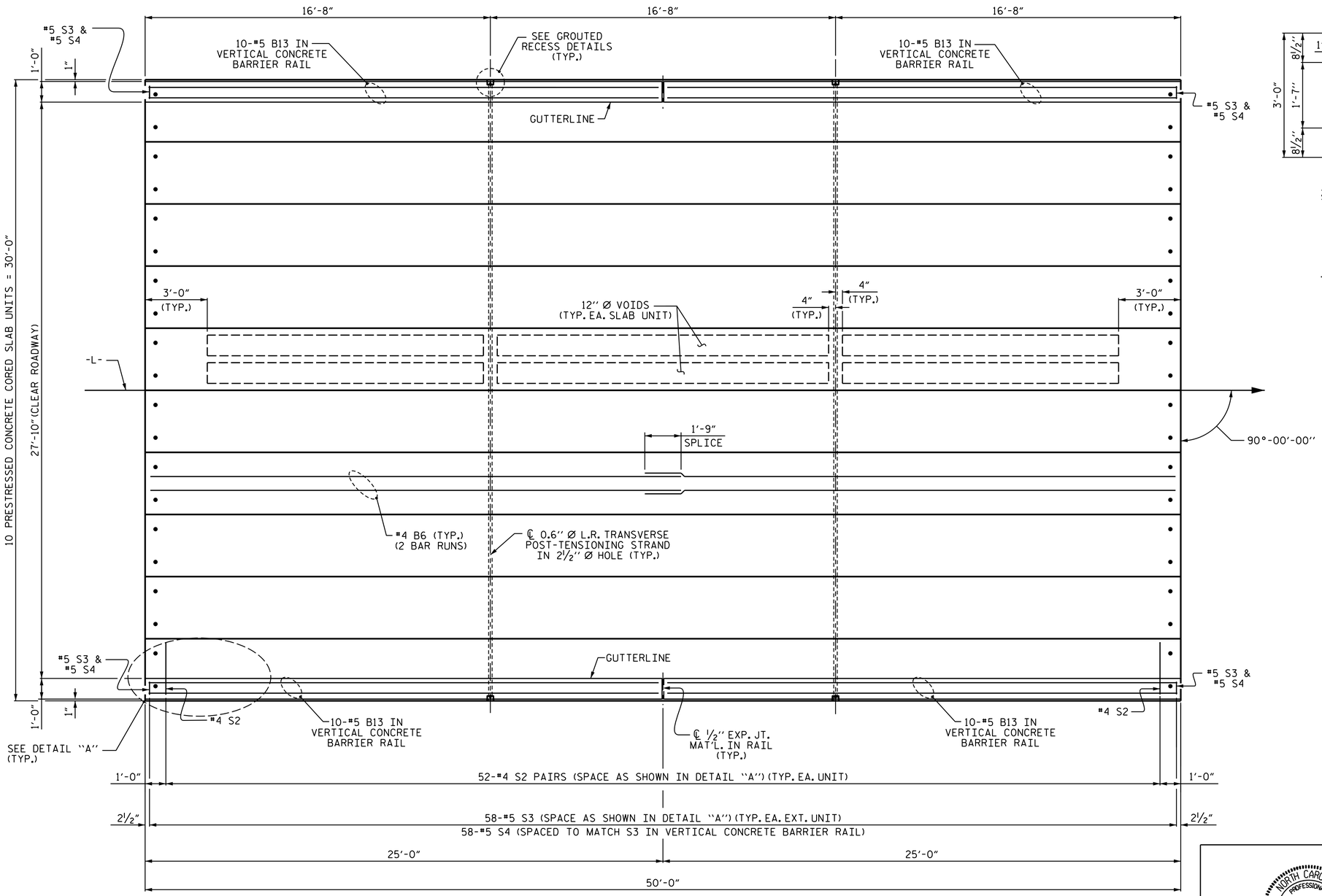

PLAN OF UNIT

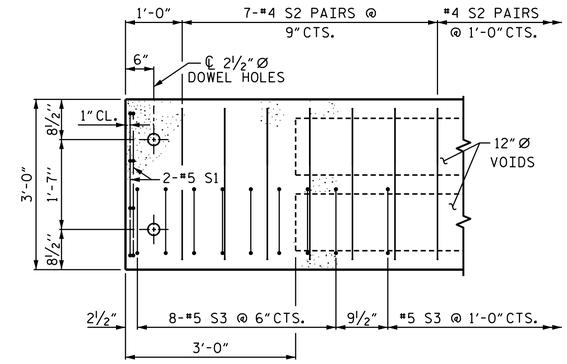

DETAIL "A"

(TYPICAL EACH END OF UNIT)
NOTE: EXTERIOR UNIT SHOWN - INTERIOR UNIT SIMILAR EXCEPT OMIT #5 S3 BARS.

PROJECT NO. 17BP.2.R.95
BEAUFORT COUNTY
STATION: 16+80.00 -L-

SHEET 3 OF 5

NORTH CAROLINA PROFESSIONAL SEAL 20125 ENGINEER MARSHALL G. CHEEK, JR.

DocuSigned by: Marshall G. Cheek, Jr.
5FBCC2F3A4DC413...
10/14/2019

DOCUMENT NOT CONSIDERED FINAL UNLESS ALL SIGNATURES COMPLETED

TGS ENGINEERS
706 HILLSBOROUGH STREET
SUITE 200
RALEIGH, NC 27603
PH (919) 773-8887
CORP. LICENSE NO.: C-0275

STATE OF NORTH CAROLINA
DEPARTMENT OF TRANSPORTATION
RALEIGH

PLAN OF 50' UNIT
27'-10" CLEAR ROADWAY
90° SKEW

ASSEMBLED BY : STM		DATE : 01/19	
CHECKED BY : MGC		DATE : 02/19	
DRAWN BY : DGE 3/09	REV. 12/5/11	MAA/AAC	
CHECKED BY : BCH 3/09	REV. 8/14	MAA/TMG	

REVISIONS								SHEET NO.
NO.	BY:	DATE:	NO.	BY:	DATE:			S-8
1			3					TOTAL SHEETS
2			4					20

9/24/2019
X:\NCDOT\B-4709\Structures\FinalPlans\DGNs\401_017_B-4709_SMU_ CS3_060014.dgn
User:smassinople

STD. NO. 21" PCS_30_90S_50L

DocuSign Envelope ID: 11FEA873-50EA-4A02-B448-8EAF94632600

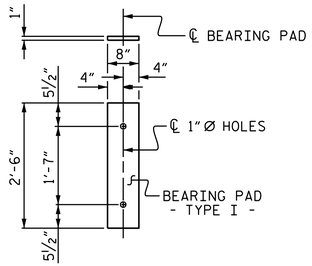

FIXED END
(TYPE I - 40 REQ'D)

ELASTOMERIC BEARING DETAILS

ELASTOMER IN ALL BEARINGS SHALL BE 50 DUROMETER HARDNESS.

GRADE 270 STRANDS	
	0.6"Ø L.R.
AREA (SQUARE INCHES)	0.217
ULTIMATE STRENGTH (LBS. PER STRAND)	58,600
APPLIED PRESTRESS (LBS. PER STRAND)	43,950

BILL OF MATERIAL FOR ONE 40' CORED SLAB UNIT

				EXTERIOR UNIT		INTERIOR UNIT	
BAR	NUMBER	SIZE	TYPE	LENGTH	WEIGHT	LENGTH	WEIGHT
B4	4	#4	STR	20'-9"	55	20'-9"	55
S1	8	#5	3	4'-3"	35	4'-3"	35
S2	84	#4	3	5'-4"	299	5'-4"	299
✱ S3	48	#5	1	5'-7"	280		
REINFORCING STEEL			LBS.		389		389
✱ EPOXY COATED REINFORCING STEEL			LBS.		280		
5000 P.S.I. CONCRETE			CU. YDS.		5.8		5.8
0.6"Ø L.R. STRANDS			No.		13		13

BILL OF MATERIAL FOR ONE 50' CORED SLAB UNIT

				EXTERIOR UNIT		INTERIOR UNIT	
BAR	NUMBER	SIZE	TYPE	LENGTH	WEIGHT	LENGTH	WEIGHT
B6	4	#4	STR	25'-9"	69	25'-9"	69
S1	8	#5	3	4'-3"	35	4'-3"	35
S2	104	#4	3	5'-4"	371	5'-4"	371
✱ S3	58	#5	1	5'-7"	338		
REINFORCING STEEL			LBS.		475		475
✱ EPOXY COATED REINFORCING STEEL			LBS.		338		
6500 P.S.I. CONCRETE			CU. YDS.		7.1		7.1
0.6"Ø L.R. STRANDS			No.		19		19

BILL OF MATERIAL FOR VERTICAL CONCRETE BARRIER RAIL

BAR	BARS PER PAIR OF EXTERIOR UNITS		TOTAL NO.	SIZE	TYPE	LENGTH	WEIGHT
	40' UNIT	50' UNIT					
✱ B11	40		40	#5	STR	19'-7"	817
✱ B13		40	40	#5	STR	24'-7"	1026
✱ S4	96	116	212	#5	2	7'-2"	1585
✱ EPOXY COATED REINFORCING STEEL					LBS.		3428
CLASS AA CONCRETE					CU.YDS.		23.0
TOTAL VERTICAL CONCRETE BARRIER RAIL					LN. FT.		180.25

NOTES

ALL PRESTRESSING STRANDS SHALL BE 7-WIRE LOW RELAXATION GRADE 270 STRANDS AND SHALL CONFORM TO AASHTO M203 EXCEPT FOR SAMPLING REQUIREMENTS WHICH SHALL BE IN ACCORDANCE WITH THE STANDARD SPECIFICATIONS.

ALL REINFORCING STEEL CAST WITH THE CORED SLAB SECTIONS SHALL BE GRADE 60 AND SHALL BE INCLUDED IN THE UNIT PRICE BID FOR PRESTRESSED CONCRETE CORED SLABS.

RECESSES FOR TRANSVERSE STRANDS SHALL BE GROUTED AFTER THE TENSIONING OF THE STRANDS.

THE 2½"Ø DOWEL HOLES AT FIXED ENDS OF SLAB SECTIONS SHALL BE FILLED WITH NON-SHRINK GROUT.

THE BACKER RODS SHALL CONFORM TO THE REQUIREMENTS OF TYPE M BOND BREAKER. SEE SECTION 1028 OF THE STANDARD SPECIFICATIONS.

WHEN CORED SLABS ARE CAST, AN INTERNAL HOLD-DOWN SYSTEM SHALL BE EMPLOYED TO PREVENT VOIDS FROM RISING OR MOVING SIDEWAYS. AT LEAST SIX WEEKS PRIOR TO CASTING CORED SLABS, THE CONTRACTOR SHALL SUBMIT TO THE ENGINEER FOR REVIEW AND COMMENT, DETAILED DRAWINGS OF THE PROPOSED HOLD-DOWN SYSTEM. IN ADDITION TO STRUCTURAL DETAILS, LOCATION AND SPACING OF THE HOLD-DOWNS SHALL BE INDICATED.

ALL REINFORCING STEEL IN THE VERTICAL CONCRETE BARRIER RAIL SHALL BE EPOXY COATED.

PRESTRESSING STRANDS SHALL BE CUT FLUSH WITH THE CORED SLAB UNIT ENDS.

APPLY EPOXY PROTECTIVE COATING TO CORED SLAB UNIT ENDS.

GROOVED CONTRACTION JOINTS, ½" IN DEPTH, SHALL BE TOOLED IN ALL EXPOSED FACES OF THE BARRIER RAIL AND IN ACCORDANCE WITH ARTICLE 825-10(B) OF THE STANDARD SPECIFICATIONS. A CONTRACTION JOINT SHALL BE LOCATED AT EACH THIRD POINT BETWEEN BARRIER RAIL EXPANSION JOINTS. ONLY ONE CONTRACTION JOINT IS REQUIRED AT MIDPOINT OF BARRIER RAIL SEGMENTS LESS THAN 20 FEET IN LENGTH AND NO CONTRACTION JOINTS ARE REQUIRED FOR THOSE SEGMENTS LESS THAN 10 FEET IN LENGTH.

FLAME CUTTING OF THE TRANSVERSE POST-TENSIONING STRAND IS NOT ALLOWED.

THE TRANSFER OF LOAD FROM THE ANCHORAGES TO THE CORED SLAB UNIT SHALL BE DONE WHEN THE CONCRETE HAS REACHED A COMPRESSIVE STRENGTH OF NOT LESS THAN THE REQUIRED STRENGTH SHOWN IN THE "CONCRETE RELEASE STRENGTH" TABLE.

FOR GROUT FOR STRUCTURES, SEE SPECIAL PROVISIONS.

THE PERMITTED THREADED INSERTS ARE DETAILED AS AN OPTION FOR THE CONTRACTOR TO ATTACH FALSEWORK AND FORMWORK DURING CONSTRUCTION.

THE PERMITTED THREADED INSERTS IN THE EXTERIOR UNITS SHALL BE SIZED BY THE CONTRACTOR, SPACED AT 4'-0" CENTERS AND GALVANIZED IN ACCORDANCE WITH SECTION 1076 OF THE STANDARD SPECIFICATIONS. STAINLESS STEEL THREADED INSERTS MAY BE USED AS AN ALTERNATE.

THE PERMITTED THREADED INSERTS SHALL BE GROUTED BY THE CONTRACTOR IMMEDIATELY FOLLOWING REMOVAL OF THE FALSEWORK.

THE COST OF THE PERMITTED THREADED INSERTS SHALL BE INCLUDED IN THE PRICE BID FOR THE PRECAST UNITS.

PRESTRESSED CONCRETE CORED SLAB UNITS SHALL CONTAIN CALCIUM NITRITE CORROSION INHIBITOR.

DEAD LOAD DEFLECTION AND CAMBER

	40' CSU	50' CSU
CORED SLAB UNIT	3'-0" x 1'-9"	3'-0" x 1'-9"
	0.6"Ø L.R. STRAND	0.6"Ø L.R. STRAND
CAMBER (SLAB ALONE IN PLACE)	⅞" ↑	1½" ↑
DEFLECTION DUE TO SUPERIMPOSED DEAD LOAD✱✱	⅛" ↓	⅜" ↓
FINAL CAMBER	¾" ↑	1⅛" ↑

✱✱ INCLUDES FUTURE WEARING SURFACE

GUTTERLINE ASPHALT THICKNESS & RAIL HEIGHT

	ASPHALT OVERLAY THICKNESS	RAIL HEIGHT
	@ MID-SPAN	@ MID-SPAN
40' UNITS	2"	3'-8"
50' UNITS	1⅝"	3'-7⅝"

CORED SLABS REQUIRED

	NUMBER	LENGTH	TOTAL LENGTH
40' UNIT			
EXTERIOR C.S.	2	40'-0"	80'-0"
INTERIOR C.S.	8	40'-0"	320'-0"
TOTAL	10		400'-0"

CORED SLABS REQUIRED

	NUMBER	LENGTH	TOTAL LENGTH
50' UNIT			
EXTERIOR C.S.	2	50'-0"	100'-0"
INTERIOR C.S.	8	50'-0"	400'-0"
TOTAL	10		500'-0"

CONCRETE RELEASE STRENGTH

UNIT	PSI
40' UNITS	4000
50' UNITS	4900

PROJECT NO. 17BP.2.R.95
BEAUFORT COUNTY
STATION: 16+80.00 -L-

SHEET 4 OF 5

NORTH CAROLINA PROFESSIONAL SEAL 20125 ENGINEER MARSHALL C. CHECK, JR.
DocuSigned by: Marshall C. Check, Jr.
5FBCC2F3A4DC413...
10/14/2019

STATE OF NORTH CAROLINA
DEPARTMENT OF TRANSPORTATION
RALEIGH

STANDARD
3'-0" X 1'-9"
PRESTRESSED CONCRETE
CORED SLAB UNIT
90° SKEW

DOCUMENT NOT CONSIDERED FINAL UNLESS ALL SIGNATURES COMPLETED
TGS ENGINEERS
706 HILLSBOROUGH STREET
SUITE 200
RALEIGH, NC 27603
PH (919) 773-8887
CORP. LICENSE NO.: C-0275

REVISIONS						SHEET NO.
NO.	BY:	DATE:	NO.	BY:	DATE:	S-9
1			3			TOTAL SHEETS
2			4			20

ASSEMBLED BY :	STM	DATE :	01/19
CHECKED BY :	MGC	DATE :	02/19
DRAWN BY : DGE 5/09	REV. 5/18	MAA/THC	
CHECKED BY : BCH 6/09			

10/8/2019
X:\NCDOT\B-4709\Structures\FinalPlans\DGNs\401_019_B-4709_SMU_ CS4_060014.dgn
User:smossinople

STD. NO. 21"PCS3_30_90S

DocuSign Envelope ID: 11FEA873-50EA-4A02-B448-8EAF94632600

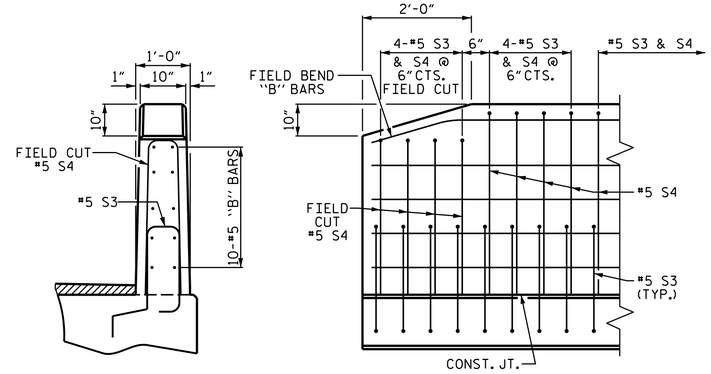

END VIEW

SIDE VIEW

END OF RAIL DETAILS

BAR TYPES

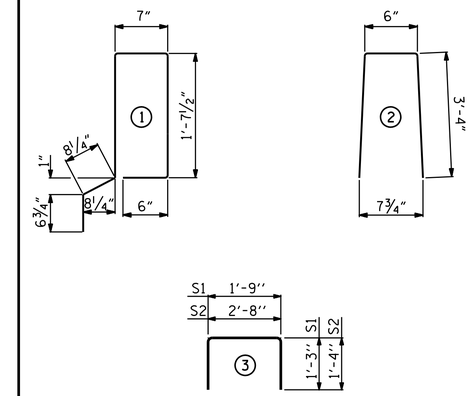

ALL BAR DIMENSIONS ARE OUT TO OUT

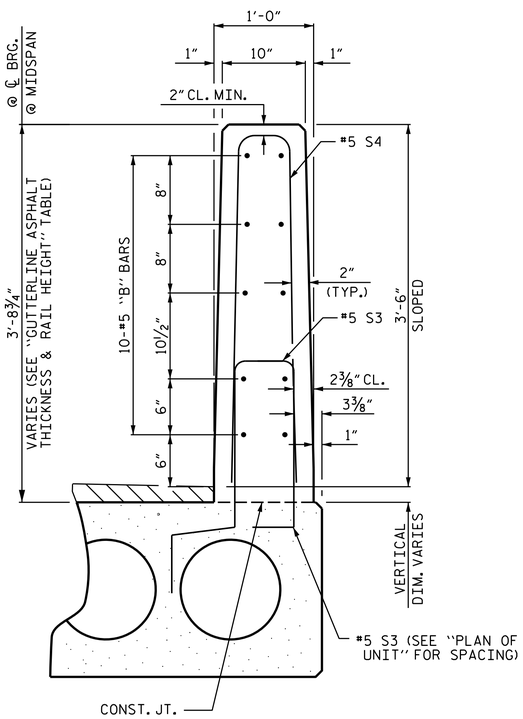

VERTICAL CONCRETE BARRIER RAIL SECTION

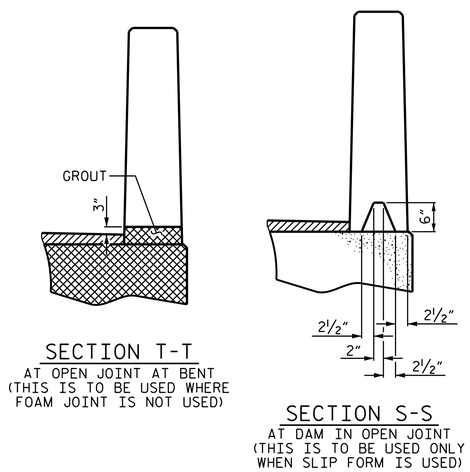

SECTION T-T
AT OPEN JOINT AT BENT
(THIS IS TO BE USED WHERE FOAM JOINT IS NOT USED)

SECTION S-S
AT DAM IN OPEN JOINT
(THIS IS TO BE USED ONLY WHEN SLIP FORM IS USED)

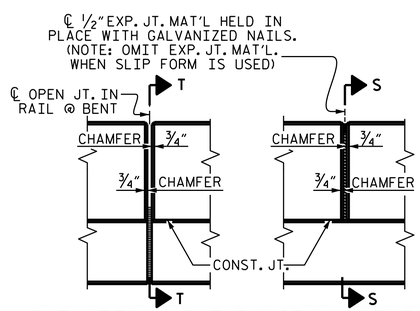

ELEVATION AT EXPANSION JOINTS

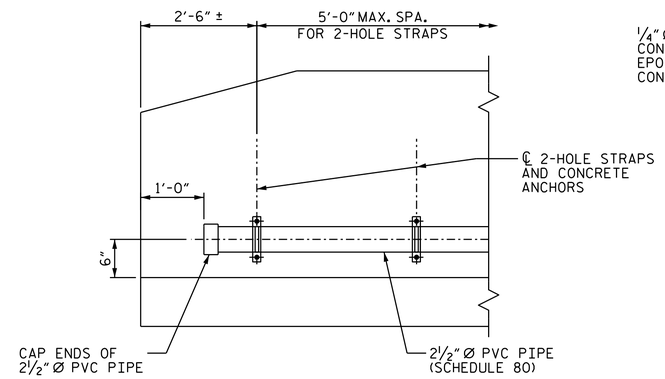

ELEVATION

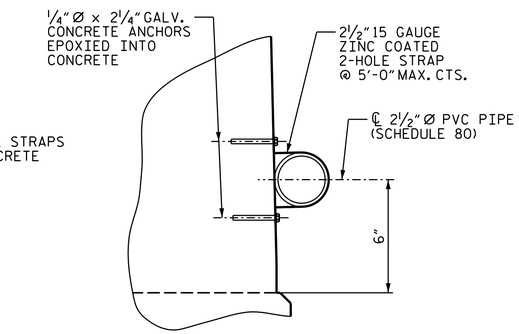

SECTION

FIBER OPTIC CONDUIT SYSTEM DETAILS

2½" Ø SCHEDULE 80 PVC PIPE ATTACHED TO THE BACK OF BOTH RAILS FOR FUTURE FIBER OPTIC CABLE.

PROJECT NO. 17BP.2.R.95
BEAUFORT COUNTY
STATION: 16+80.00 -L-

SHEET 5 OF 5

ASSEMBLED BY : STM	DATE : 01/19		
CHECKED BY : MGC	DATE : 02/19		
DRAWN BY : DGE 5/09	REV. 5/18	MAA/THC	
CHECKED BY : BCH 6/09			

NORTH CAROLINA PROFESSIONAL SEAL 20125 ENGINEER MARSHALL G. CHECK, JR.

Marshall G. Check Jr.
5FBCC2F3A4DC413...
10/14/2019

DOCUMENT NOT CONSIDERED FINAL UNLESS ALL SIGNATURES COMPLETED

TGS ENGINEERS
706 HILLSBOROUGH STREET
SUITE 200
RALEIGH, NC 27603
PH (919) 773-8887
CORP. LICENSE NO.: C-0275

STATE OF NORTH CAROLINA
DEPARTMENT OF TRANSPORTATION
RALEIGH

STANDARD
3'-0" X 1'-9"
PRESTRESSED CONCRETE
CORED SLAB UNIT
90° SKEW

REVISIONS						
NO.	BY:	DATE:	NO.	BY:	DATE:	
1			3			
2			4			

SHEET NO. S-10
TOTAL SHEETS 20

STD. NO. 21" PCS3_30_90S

10/1/2019
X:\NCDOT\B-4709\Structures\FinalPlans\DGNs\401_019_B-4709_SMU_ CS5_060014.dgn
User:smassinople

DocuSign Envelope ID: 11FEA873-50EA-4A02-B448-8EAF94632600

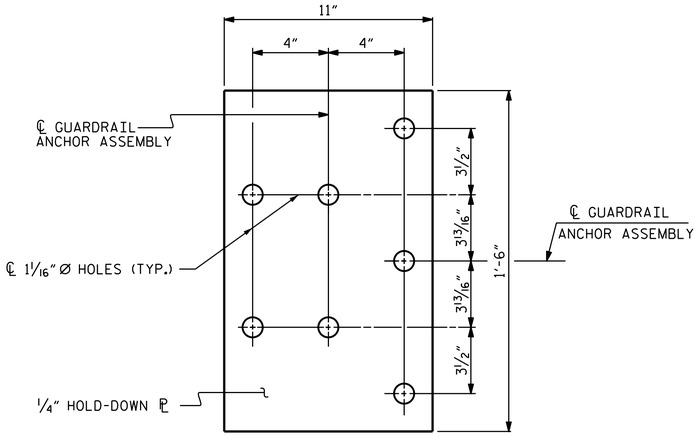

PLAN

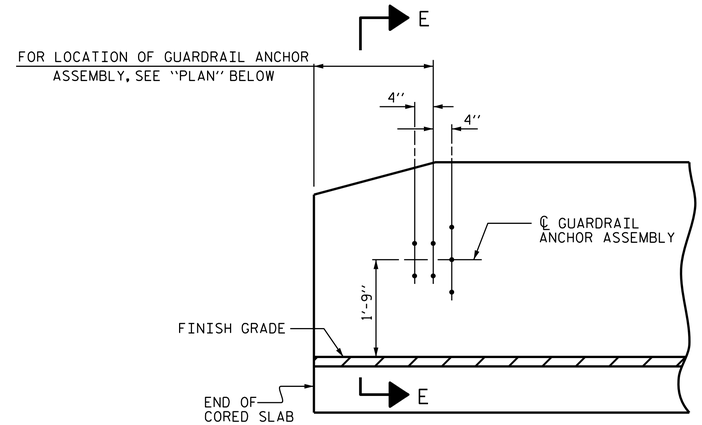

ELEVATION

NOTES

THE GUARDRAIL ANCHOR ASSEMBLY SHALL CONSIST OF A 1/4" HOLD DOWN PLATE AND 7 - 7/8" Ø BOLTS WITH NUTS AND WASHERS.

THE HOLD-DOWN PLATE SHALL CONFORM TO AASHTO M270 GRADE 36. AFTER FABRICATION, THE HOLD-DOWN PLATE SHALL BE HOT-DIP GALVANIZED IN ACCORDANCE WITH AASHTO M111.

BOLTS SHALL CONFORM TO THE REQUIREMENTS OF ASTM A307 AND NUTS SHALL CONFORM TO THE REQUIREMENTS OF AASHTO M291. BOLTS, NUTS AND WASHERS SHALL BE GALVANIZED. (AT THE CONTRACTOR'S OPTION, STAINLESS STEEL BOLTS, NUTS AND WASHERS MAY BE USED AS AN ALTERNATE FOR THE 7/8" Ø GALVANIZED BOLTS, NUTS AND WASHERS. THEY SHALL CONFORM TO OR EXCEED THE MECHANICAL REQUIREMENTS OF ASTM A307. THE USE OF THIS ALTERNATE SHALL BE APPROVED BY THE ENGINEER.)

THE GUARDRAIL ANCHOR ASSEMBLY IS REQUIRED AT ALL POINTS WHERE APPROACH GUARDRAIL IS TO BE ATTACHED TO THE END OF BARRIER RAIL. FOR POINTS OF ATTACHMENT, SEE SKETCH.

AFTER INSTALLATION, THE EXPOSED THREAD OF THE BOLT SHALL BE BURRED WITH A SHARP POINTED TOOL.

THE COST OF THE GUARDRAIL ANCHOR ASSEMBLY SHALL BE INCLUDED IN THE UNIT CONTRACT PRICE BID FOR VERTICAL CONCRETE BARRIER RAIL.

THE VERTICAL REINFORCING BARS MAY BE SHIFTED SLIGHTLY IN THE VERTICAL CONCRETE BARRIER RAIL TO CLEAR ASSEMBLY BOLTS.

THE 1 1/4" Ø HOLES SHALL BE FORMED OR DRILLED WITH A CORE BIT. IMPACT TOOLS WILL NOT BE PERMITTED. ANY CONCRETE DAMAGED BY THIS WORK SHALL BE REPAIRED TO THE SATISFACTION OF THE ENGINEER.

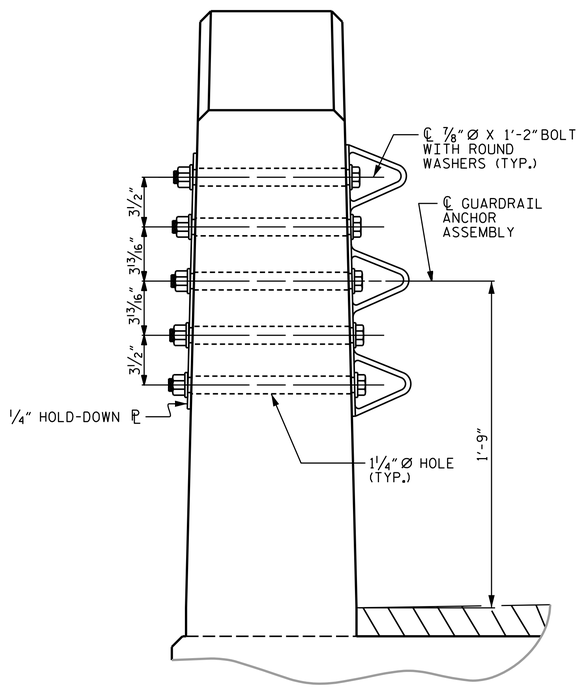

SECTION E-E

GUARDRAIL ANCHOR ASSEMBLY DETAILS

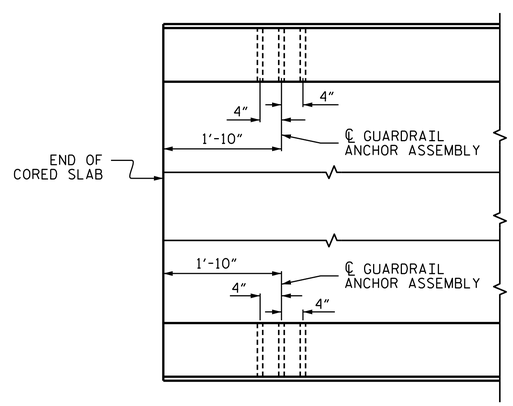

PLAN

LOCATION OF ANCHORS FOR GUARDRAIL

END BENT #1 SHOWN, END BENT #2 SIMILAR.

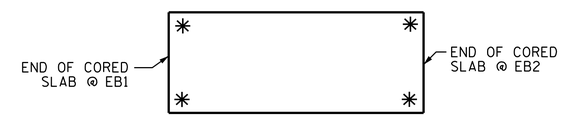

SKETCH SHOWING POINTS OF ATTACHMENT

✳ DENOTES GUARDRAIL ANCHOR ASSEMBLY

PROJECT NO. 17BP.2.R.95
BEAUFORT COUNTY
STATION: 16+80.00 -L-

ASSEMBLED BY :	STM	DATE :	01/19
CHECKED BY :	MGC	DATE :	07/19
DRAWN BY : MAA	5/10	REV. 6/13	MAA/GM
CHECKED BY : GM	5/10	REV. 1/15	MAA/TMG
		REV. 12/17	MAA/THC

NORTH CAROLINA PROFESSIONAL SEAL 20125 ENGINEER MARSHALL G. CHECK, JR.

DocuSigned by: Marshall G. Check, Jr. 5FBCC2F3A4DC413... 10/14/2019

DOCUMENT NOT CONSIDERED FINAL UNLESS ALL SIGNATURES COMPLETED

TGS ENGINEERS
706 HILLSBOROUGH STREET
SUITE 200
RALEIGH, NC 27603
PH (919) 773-8887
CORP. LICENSE NO.: C-0275

STATE OF NORTH CAROLINA
DEPARTMENT OF TRANSPORTATION
RALEIGH

STANDARD
GUARDRAIL ANCHORAGE DETAILS
FOR VERTICAL CONCRETE BARRIER RAIL

REVISIONS						
NO.	BY:	DATE:	NO.	BY:	DATE:	
1			3			
2			4			

SHEET NO. S-11
TOTAL SHEETS 20

STD. NO. GRA3

DocuSign Envelope ID: 11FEA873-50EA-4A02-B448-8EAF94632600

NOTES

STIRRUPS IN CAP MAY BE SHIFTED AS NECESSARY TO CLEAR DOWELS.

THE CONCRETE IN THE SHADED AREA OF THE WING SHALL BE POURED AFTER THE VERTICAL CONCRETE BARRIER RAIL IS CAST IF SLIP FORMING IS USED.

FOR PILE SPLICE DETAILS, SEE SHEET 4 OF 4.

FOR WING DETAILS, SEE SHEET 3 OF 4.

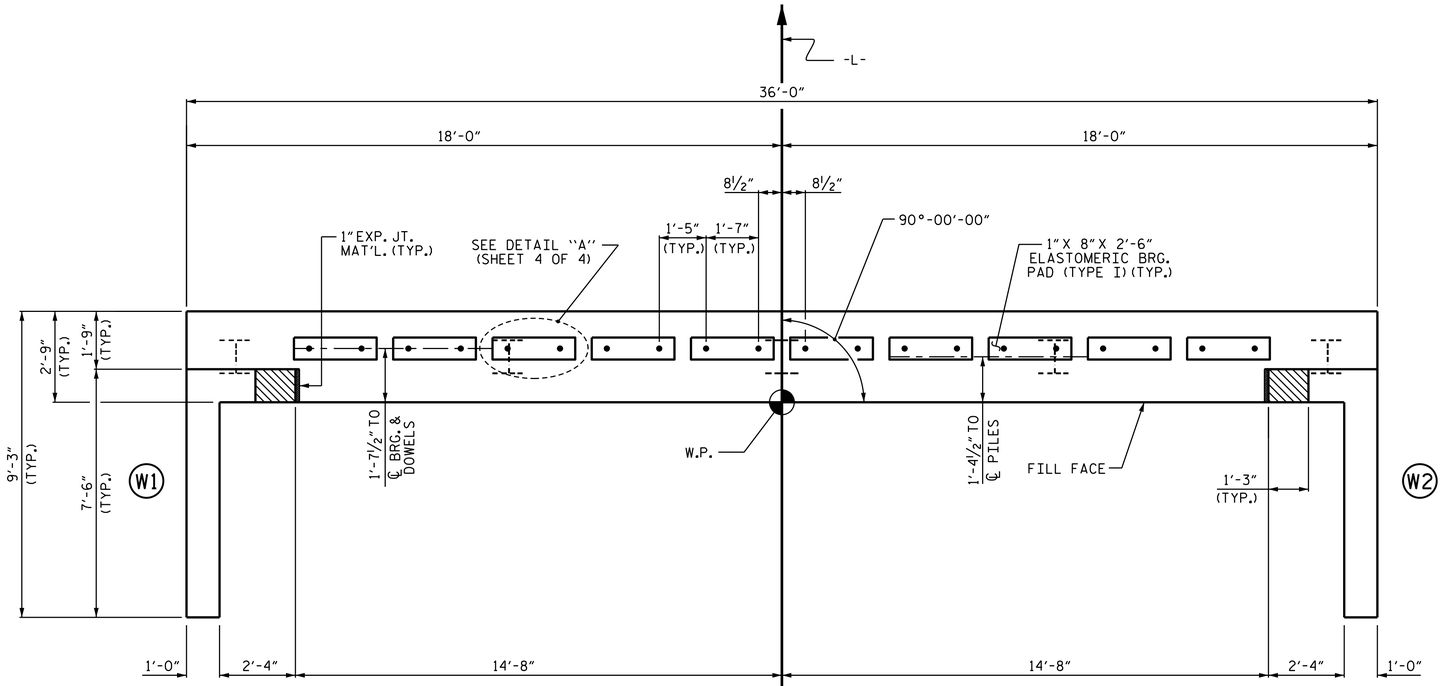

PLAN

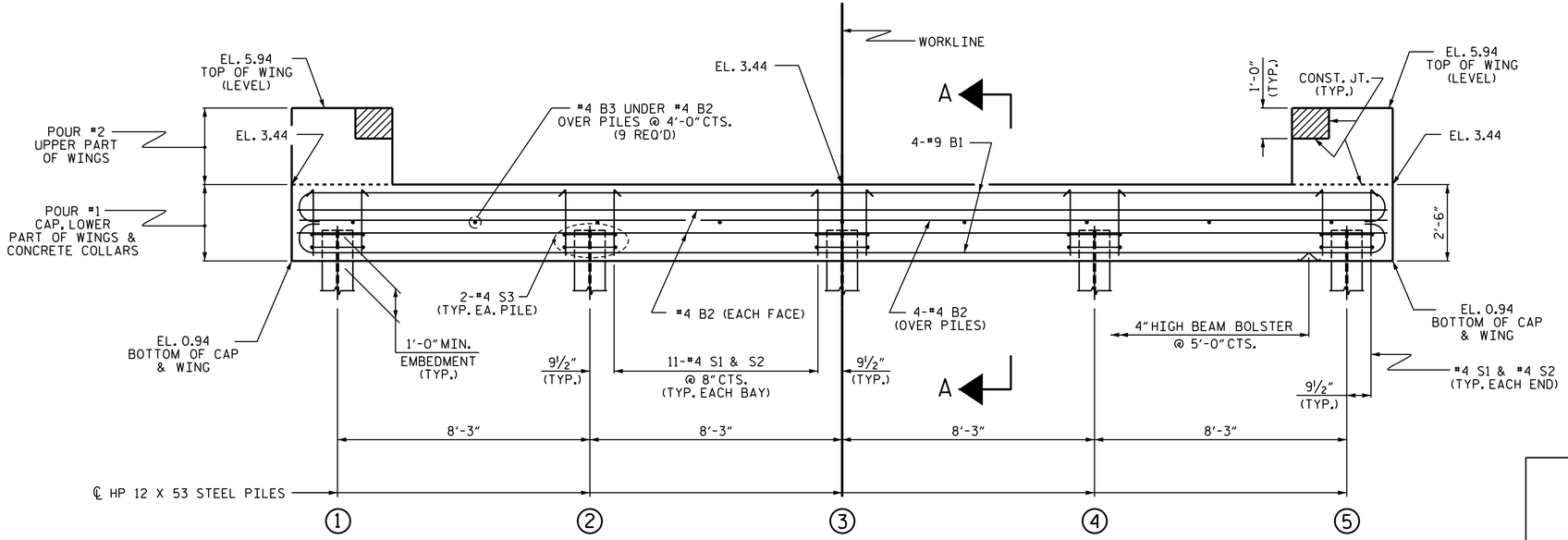

ELEVATION

WINGS NOT SHOWN FOR CLARITY.
FOR SECTION A-A, SEE SHEET 4 OF 4.
CONCRETE COLLARS FOR STEEL PILES NOT SHOWN IN PLAN AND ELEVATION VIEWS FOR CLARITY.
SEE "CORROSION PROTECTION FOR STEEL PILES DETAIL", SHEET 4 OF 4.

PROJECT NO. 17BP.2.R.95
BEAUFORT COUNTY
STATION: 16+80.00 -L-

SHEET 1 OF 4

NORTH CAROLINA PROFESSIONAL SEAL 20125 ENGINEER MARSHALL G. CHEEK, JR.

Marshall G. Cheek Jr.
5FBCC2F3A4DC413...
10/14/2019

DOCUMENT NOT CONSIDERED FINAL UNLESS ALL SIGNATURES COMPLETED

TGS ENGINEERS
706 HILLSBOROUGH STREET
SUITE 200
RALEIGH, NC 27603
PH (919) 773-8887
CORP. LICENSE NO.: C-0275

STATE OF NORTH CAROLINA
DEPARTMENT OF TRANSPORTATION
RALEIGH

SUBSTRUCTURE

END BENT No. 1

ASSEMBLED BY : STM	DATE : 01/19		
CHECKED BY : MGC	DATE : 02/19		
DRAWN BY : DGE 01/10	REV. 4/15	MAA/TMG	
CHECKED BY : MKT 01/10			

REVISIONS						SHEET NO.
NO.	BY:	DATE:	NO.	BY:	DATE:	S-12
1			3			TOTAL SHEETS
2			4			20

10/9/2019
X:\NCDOT\B-4709\Structures\FinalPlans\DGNs\401_025_B-4709_SMU_ EB1_060014.dgn
User:smassinople

STD. NO. EB_30_90S

DocuSign Envelope ID: 11FEA873-50EA-4A02-B448-8EAF94632600

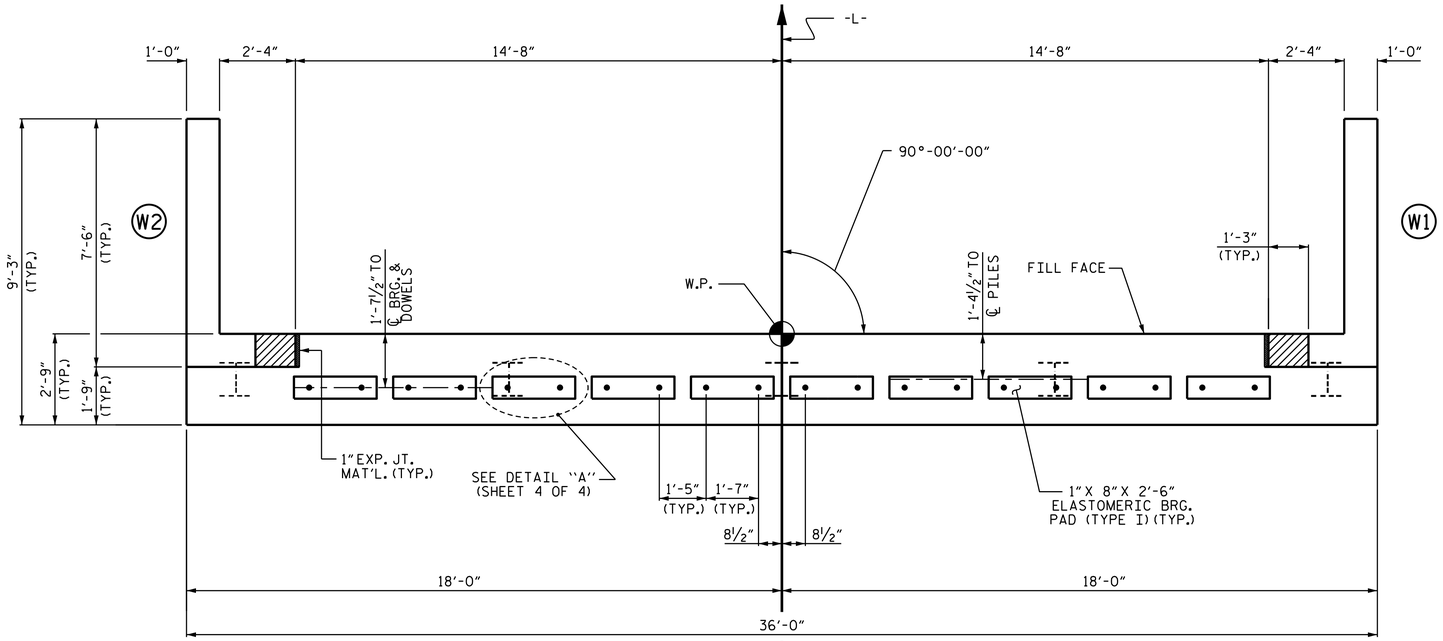

PLAN

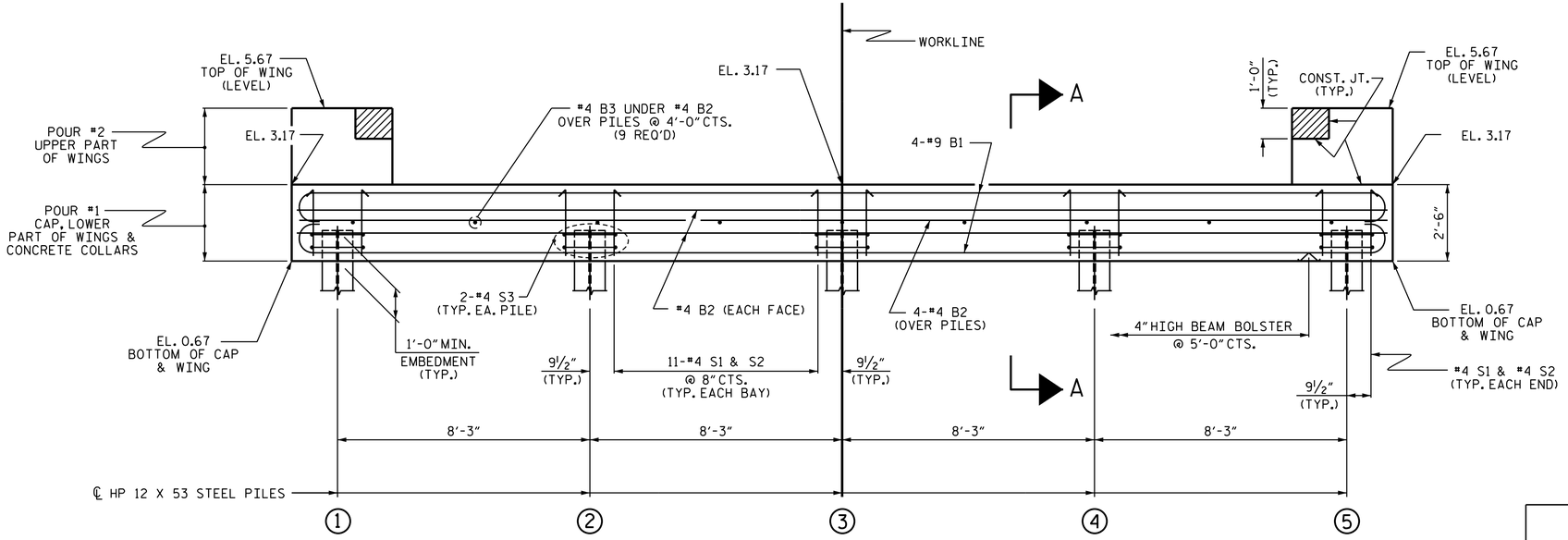

ELEVATION

WINGS NOT SHOWN FOR CLARITY.
FOR SECTION A-A, SEE SHEET 4 OF 4.
CONCRETE COLLARS FOR STEEL PILES NOT SHOWN IN PLAN AND ELEVATION VIEWS FOR CLARITY.
SEE "CORROSION PROTECTION FOR STEEL PILES DETAIL", SHEET 4 OF 4.

NOTES

STIRRUPS IN CAP MAY BE SHIFTED AS NECESSARY TO CLEAR DOWELS.

THE CONCRETE IN THE SHADED AREA OF THE WING SHALL BE POURED AFTER THE VERTICAL CONCRETE BARRIER RAIL IS CAST IF SLIP FORMING IS USED.

FOR PILE SPLICE DETAILS, SEE SHEET 4 OF 4.

FOR WING DETAILS, SEE SHEET 3 OF 4.

PROJECT NO. 17BP.2.R.95
BEAUFORT COUNTY
STATION: 16+80.00 -L-

SHEET 2 OF 4

NORTH CAROLINA PROFESSIONAL SEAL 20125 ENGINEER MARSHALL C. CHECK, JR.

DocuSigned by: Marshall C. Check, Jr.
5FBCC2F3A4DC413...
10/14/2019

STATE OF NORTH CAROLINA
DEPARTMENT OF TRANSPORTATION
RALEIGH

SUBSTRUCTURE

END BENT No. 2

ASSEMBLED BY : STM	DATE : 01/19
CHECKED BY : MGC	DATE : 02/19
DRAWN BY : DGE 01/10	REV. 4/15 MAA/TMG
CHECKED BY : MKT 01/10	

DOCUMENT NOT CONSIDERED FINAL UNLESS ALL SIGNATURES COMPLETED

TGS ENGINEERS
706 HILLSBOROUGH STREET
SUITE 200
RALEIGH, NC 27603
PH (919) 773-8887
CORP. LICENSE NO.: C-0275

REVISIONS								
NO.	BY:	DATE:	NO.	BY:	DATE:			
1			3					
2			4					

SHEET NO. S-13
TOTAL SHEETS 20

10/9/2019
X:\NCDOT\B-4709\Structures\FinalPlans\DGNs\401_027_B-4709_SMU_ EB2_060014.dgn
User:smassinople

STD. NO. EB_30_90S

DocuSign Envelope ID: 11FEA873-50EA-4A02-B448-8EAF94632600

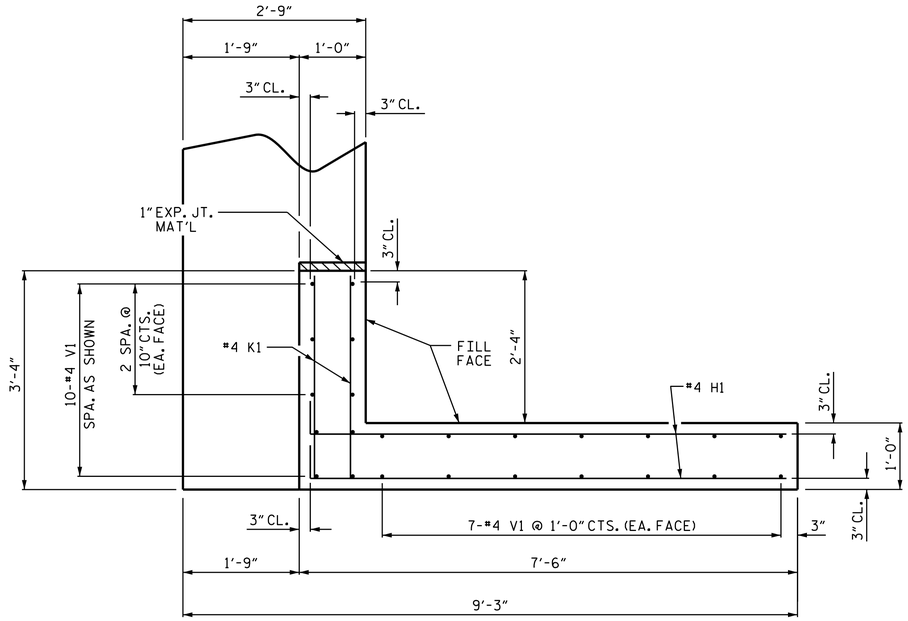

PLAN OF WING (W1)

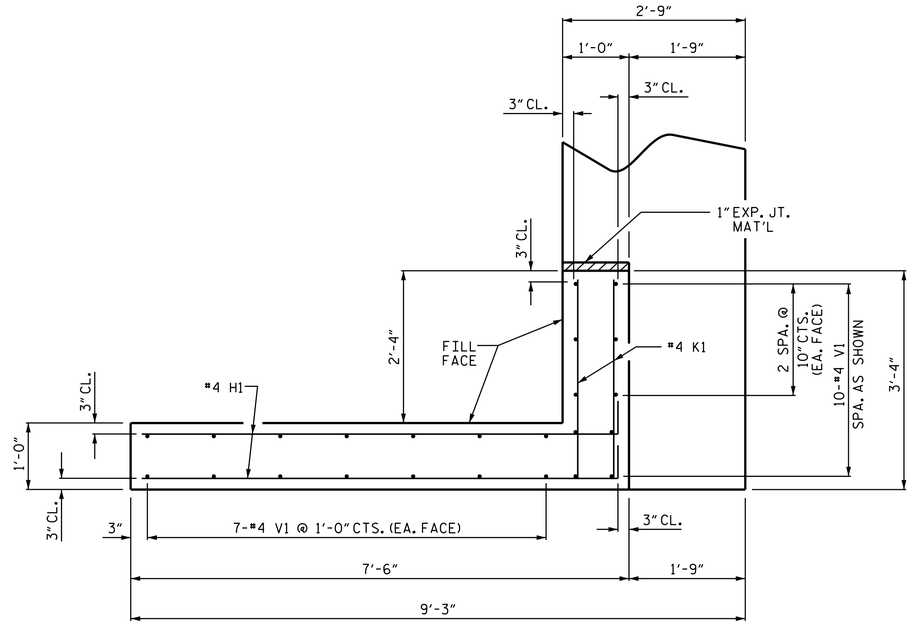

PLAN OF WING (W2)

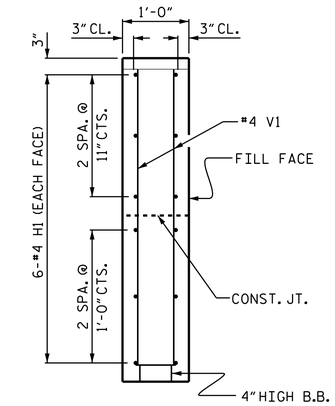

SECTION X-X

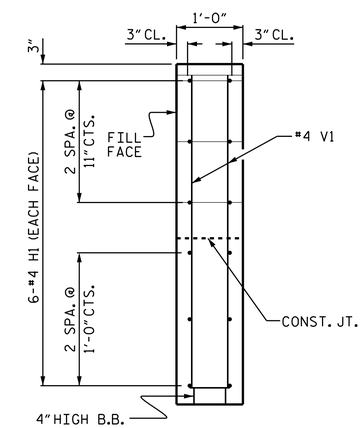

SECTION Y-Y

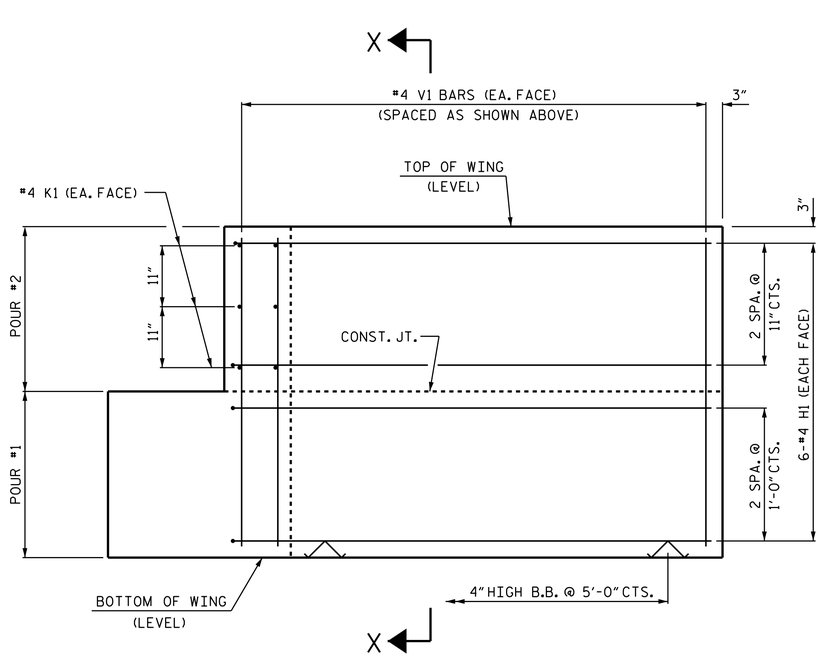

ELEVATION OF WING (W1)

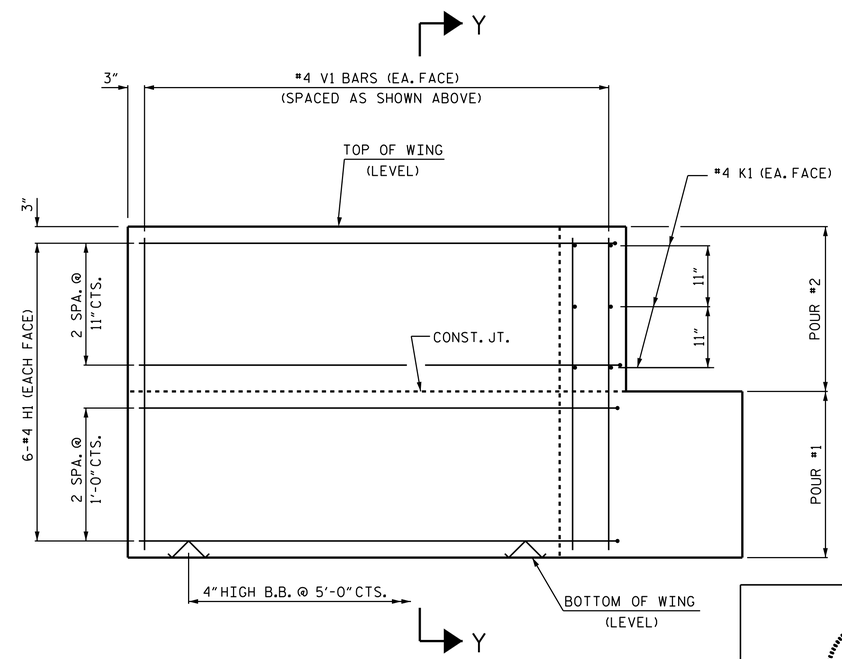

ELEVATION OF WING (W2)

WING DETAILS

PROJECT NO. 17BP.2.R.95

BEAUFORT COUNTY

STATION: 16+80.00 -L-

SHEET 3 OF 4

ASSEMBLED BY : STM		DATE : 01/19	
CHECKED BY : MGC		DATE : 02/19	
DRAWN BY : DGE 02/10	REV. 4/15	MAA/TMG	
CHECKED BY : MKT 02/10			

NORTH CAROLINA PROFESSIONAL SEAL 20125 ENGINEER MARSHALL C. CHEEK, JR.

DocuSigned by: Marshall C. Cheek, Jr. SFBCC2F3A4DC413...

10/14/2019

DOCUMENT NOT CONSIDERED FINAL UNLESS ALL SIGNATURES COMPLETED

TGS ENGINEERS
706 HILLSBOROUGH STREET
SUITE 200
RALEIGH, NC 27603
PH (919) 773-8887
CORP. LICENSE NO.: C-0275

STATE OF NORTH CAROLINA
DEPARTMENT OF TRANSPORTATION
RALEIGH

SUBSTRUCTURE

END BENT
WING DETAILS

REVISIONS						
NO.	BY:	DATE:	NO.	BY:	DATE:	
1			3			
2			4			

SHEET NO. S-14

TOTAL SHEETS 20

10/1/2019
X:\NCDOT\B-4709\Structures\FinalPlans\DGNs\401_029_B-4709_SMU_ EB3_060014.dgn
User:smassinople

STD. NO. EB_30_90S

DocuSign Envelope ID: 11FEA873-50EA-4A02-B448-8EAF94632600

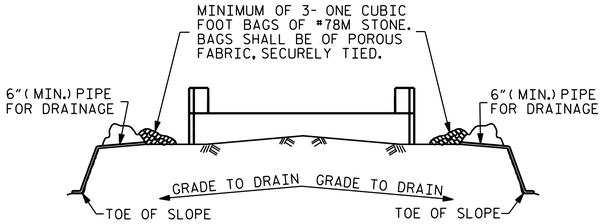

BAGGED STONE AND PIPE SHALL BE PLACED IMMEDIATELY AFTER COMPLETION OF END BENT EXCAVATION. PIPE MAY BE EITHER CONCRETE, CORRUGATED STEEL, CORRUGATED ALUMINUM ALLOY, OR CORRUGATED PLASTIC. PERFORATED PIPE WILL NOT BE ALLOWED.

BAGGED STONE SHALL REMAIN IN PLACE UNTIL THE ENGINEER DIRECTS THAT IT BE REMOVED. THE CONTRACTOR SHALL REMOVE AND DISPOSE OF SILT ACCUMULATIONS AT BAGGED STONE WHEN SO DIRECTED BY THE ENGINEER. BAGS SHALL BE REMOVED AND REPLACED WHENEVER THE ENGINEER DETERMINES THAT THEY HAVE DETERIORATED AND LOST THEIR EFFECTIVENESS.

NO SEPARATE PAYMENT WILL BE MADE FOR THIS WORK AND THE ENTIRE COST OF THIS WORK SHALL BE INCLUDED IN THE UNIT CONTRACT PRICE BID FOR THE SEVERAL PAY ITEMS.

TEMPORARY DRAINAGE AT END BENT

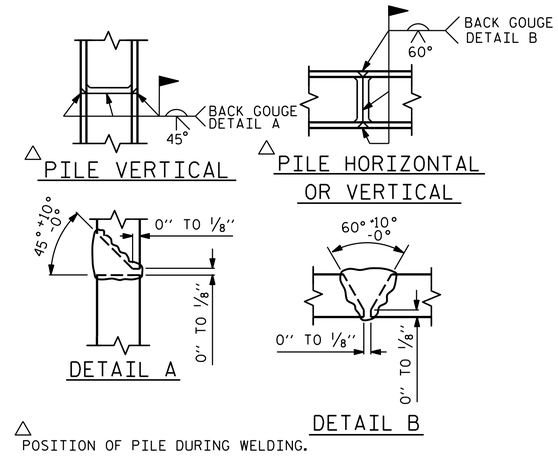

△ POSITION OF PILE DURING WELDING.

PILE SPLICE DETAILS

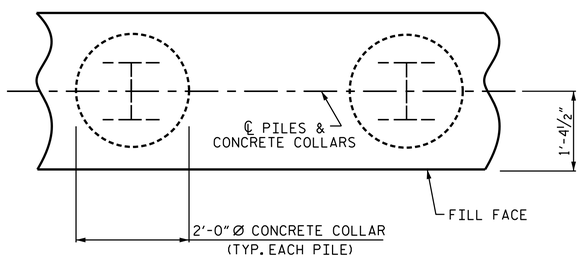

PLAN

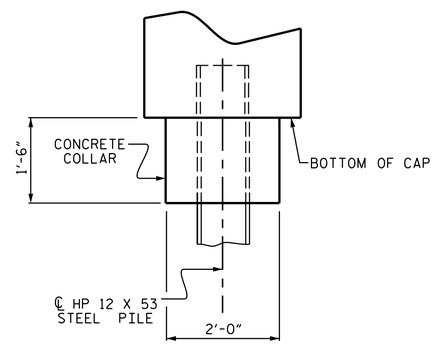

ELEVATION

CORROSION PROTECTION FOR STEEL PILES DETAIL

(END BENT No. 1 SHOWN, END BENT No. 2 SIMILAR BY ROTATION)

BAR TYPES

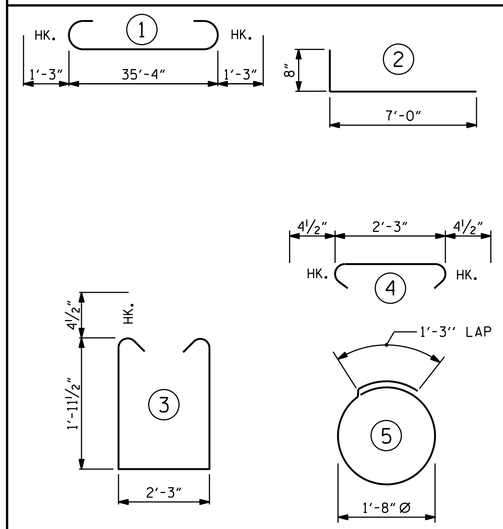

ALL BAR DIMENSIONS ARE OUT TO OUT.

END BENT No. 1	END BENT No. 2
HP 12 X 53 STEEL PILES NO: 5 LIN. FT.= 325	HP 12 X 53 STEEL PILES NO: 5 LIN. FT.= 350
PILE DRIVING EQUIPMENT SETUP FOR HP 12 X 53 STEEL PILES NO: 5	PILE DRIVING EQUIPMENT SETUP FOR HP 12 X 53 STEEL PILES NO: 5
PILE REDRIVES NO: 3	PILE REDRIVES NO: 3

BILL OF MATERIAL FOR ONE END BENT

BAR	NO.	SIZE	TYPE	LENGTH	WEIGHT
B1	8	#9	1	37'-10"	1029
B2	8	#4	STR	35'-6"	190
B3	9	#4	STR	2'-3"	14
D1	20	#6	STR	1'-6"	45
H1	24	#4	2	7'-8"	123
K1	12	#4	STR	2'-10"	23
S1	46	#4	3	6'-11"	213
S2	46	#4	4	3'-0"	92
S3	10	#4	5	6'-6"	43
V1	48	#4	STR	4'-5"	142

EPOXY COATED REINFORCING STEEL (FOR ONE END BENT) 1914 LBS.

CLASS AA CONCRETE BREAKDOWN (FOR ONE END BENT)

POUR #1 CAP, LOWER PART OF WINGS & COLLARS 11.2 C.Y.

POUR #2 UPPER PART OF WINGS 1.8 C.Y.

TOTAL CLASS AA CONCRETE 13.0 C.Y.

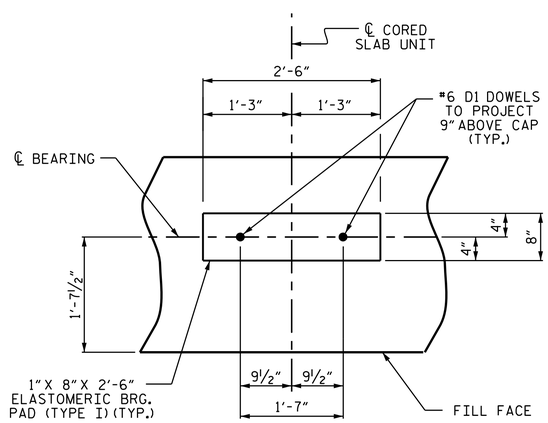

DETAIL "A"

(END BENT No. 1 SHOWN, END BENT No. 2 SIMILAR BY ROTATION)

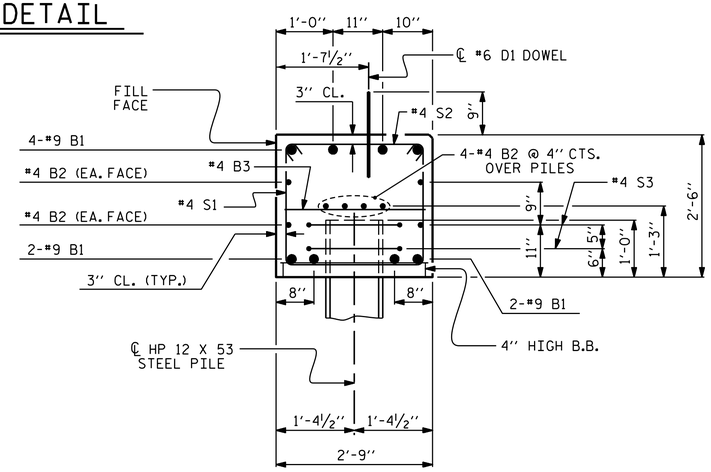

SECTION A-A

(CONCRETE COLLAR NOT SHOWN FOR CLARITY. SEE "CORROSION PROTECTION FOR STEEL PILES DETAIL.")

PROJECT NO. 17BP.2.R.95
BEAUFORT COUNTY
STATION: 16+80.00 -L-

SHEET 4 OF 4

STATE OF NORTH CAROLINA
DEPARTMENT OF TRANSPORTATION
RALEIGH

SUBSTRUCTURE

END BENT No. 1 & 2 DETAILS

NORTH CAROLINA PROFESSIONAL SEAL 20125 ENGINEER MARSHALL G. CHECK, JR.
DocuSigned by: Marshall G. Check, Jr.
5FBCC2F3A4DC413...
10/14/2019

DOCUMENT NOT CONSIDERED FINAL UNLESS ALL SIGNATURES COMPLETED

TGS ENGINEERS
706 HILLSBOROUGH STREET
SUITE 200
RALEIGH, NC 27603
PH (919) 773-8887
CORP. LICENSE NO.: C-0275

REVISIONS							
NO.	BY:	DATE:	NO.	BY:	DATE:	SHEET NO.	S-15
1			3			TOTAL SHEETS	20
2			4				

ASSEMBLED BY :	STM	DATE :	01/19
CHECKED BY :	MGC	DATE :	02/19
DRAWN BY : DGE	12/09	REV. 4/17	MAA/THC
CHECKED BY : MKT	01/10		

10/9/2019
X:\NCDOT\B-4709\Structures\FinalPlans\DGNs\401_031_B-4709_SMU_ EB4_060014.dgn
Usersmassinople

STD. NO. EB_30_90S

DocuSign Envelope ID: 11FEA873-50EA-4A02-B448-8EAF94632600

NOTES

STIRRUPS IN CAP MAY BE SHIFTED AS NECESSARY TO CLEAR DOWELS.

★ INVERT ALTERNATE STIRRUPS.

GALVANIZE THE TOP 26.5 FEET OF EACH INTERIOR BENT PILE IN ACCORDANCE WITH SECTION 1076 OF THE STANDARD SPECIFICATIONS.

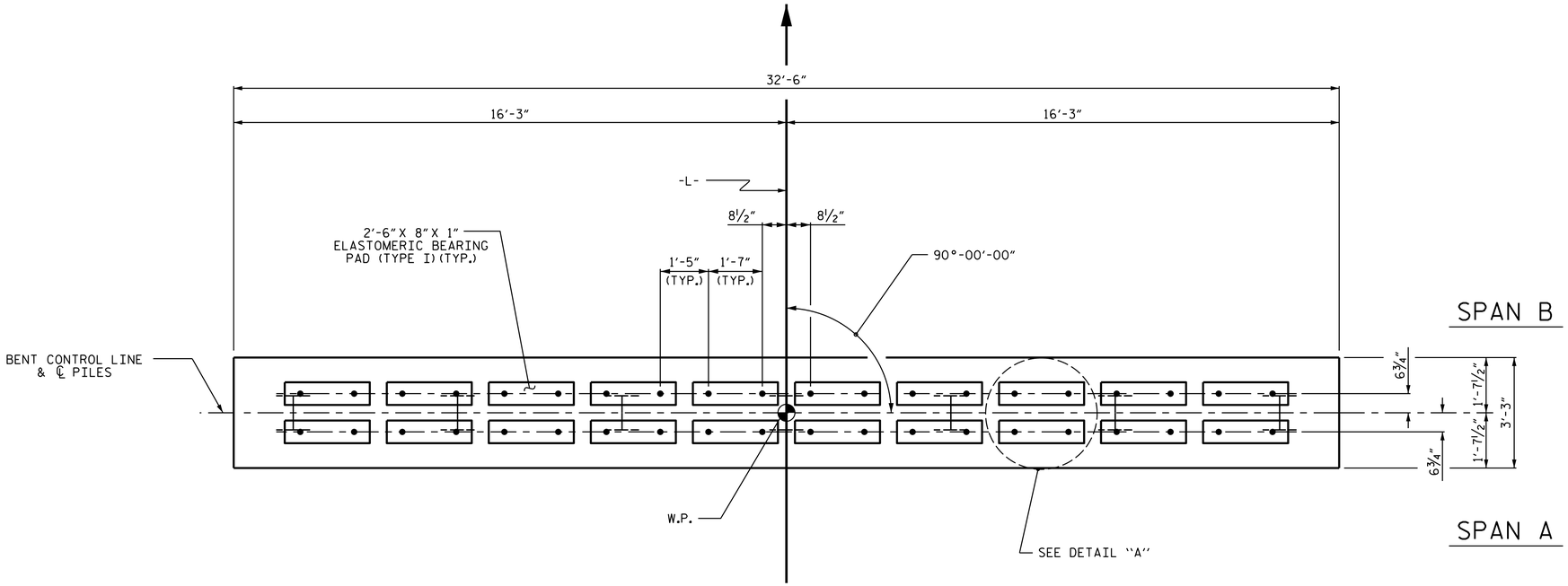

PLAN

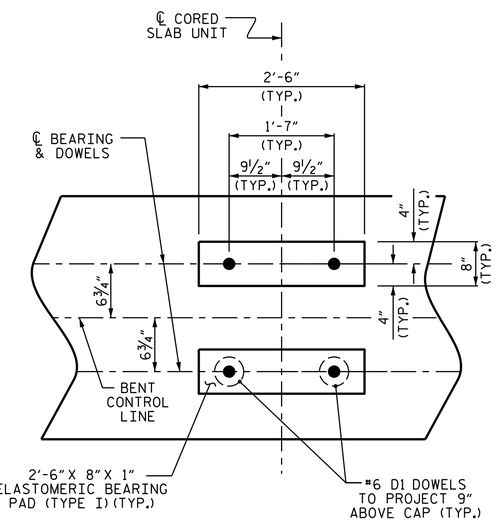

DETAIL "A"

(DIMENSIONS ARE TYPICAL EACH BEARING)

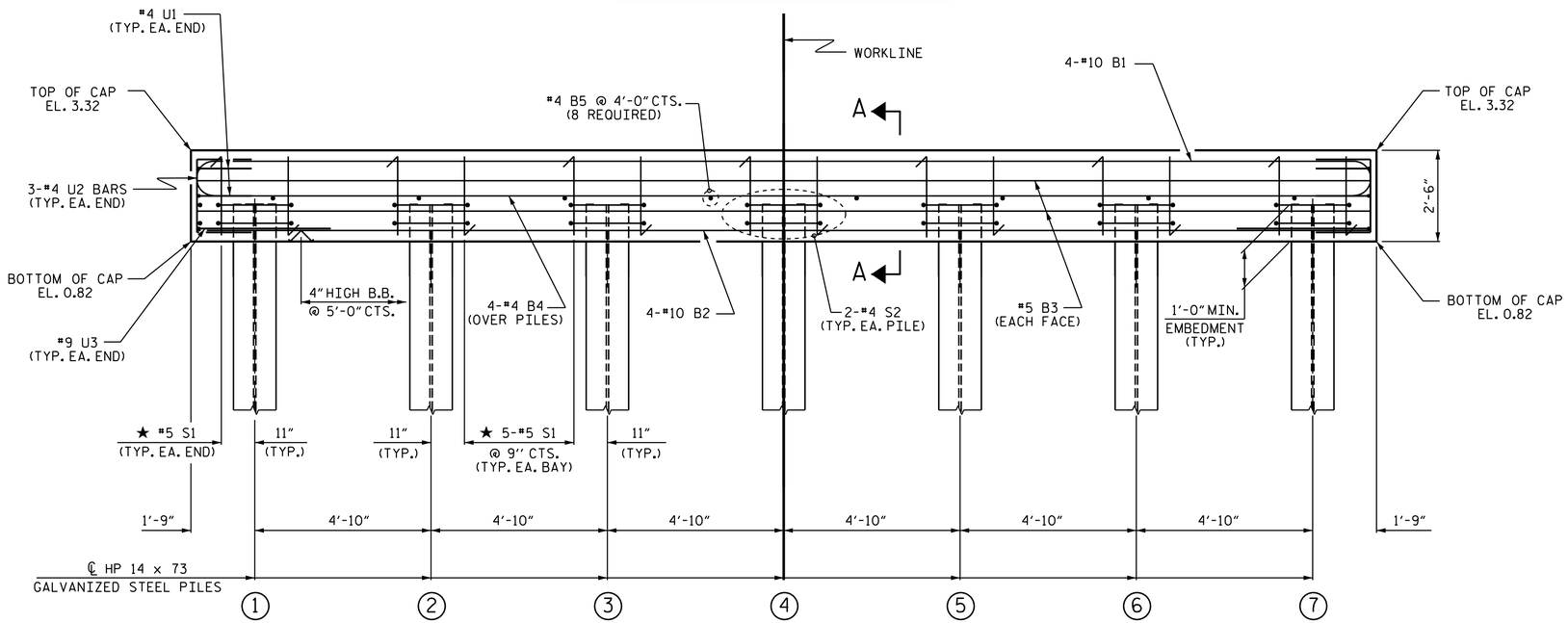

ELEVATION

FOR SECTION A-A, SEE SHEET 2 OF 2

PROJECT NO. 17BP.2.R.95

BEAUFORT COUNTY

STATION: 16+80.00 -L-

SHEET 1 OF 2

NORTH CAROLINA PROFESSIONAL SEAL 20125 ENGINEER MARSHALL C. CHEEK, JR.

DocuSigned by: Marshall C. Cheek, Jr. 5FBCC2F3A4DC413...

10/14/2019

DOCUMENT NOT CONSIDERED FINAL UNLESS ALL SIGNATURES COMPLETED

TGS ENGINEERS
706 HILLSBOROUGH STREET
SUITE 200
RALEIGH, NC 27603
PH (919) 773-8887
CORP. LICENSE NO.: C-0275

STATE OF NORTH CAROLINA
DEPARTMENT OF TRANSPORTATION
RALEIGH

SUBSTRUCTURE

BENT No. 1

REVISIONS						
NO.	BY:	DATE:	NO.	BY:	DATE:	
1			3			
2			4			

SHEET NO. S-16

TOTAL SHEETS 20

ASSEMBLED BY : STM		DATE : 01/19	
CHECKED BY : MGC		DATE : 02/19	
DRAWN BY : DGE 05/10	REV. 6/17	MAA/THC	
CHECKED BY : MKT 05/10			

10/9/2019
X:\NCDOT\B-4709\Structures\FinalPlans\DGNs\401_033_B-4709_SMU_ B1_060014.dgn
User:smassinople

STD. NO. 14" HP_BT_30_90S_<60'

DocuSign Envelope ID: 11FEA873-50EA-4A02-B448-8EAF94632600

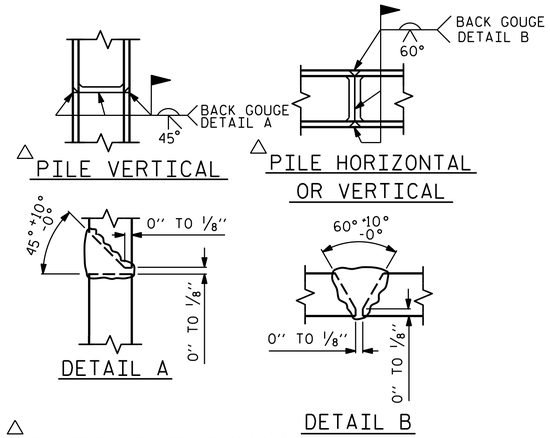

△POSITION OF PILE DURING WELDING.

PILE SPLICE DETAILS

BAR TYPES

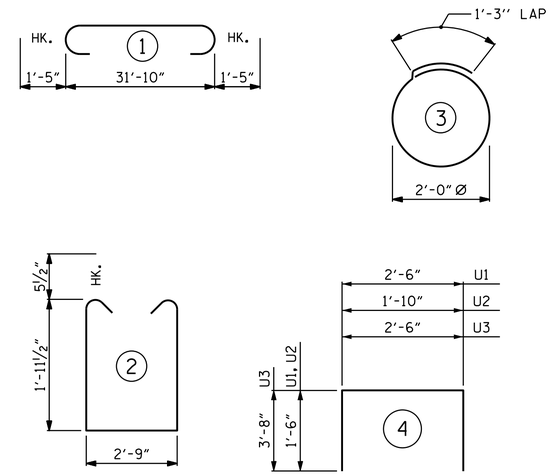

ALL BAR DIMENSIONS ARE OUT TO OUT.

BILL OF MATERIAL
FOR BENT No. 1

BAR	NO.	SIZE	TYPE	LENGTH	WEIGHT
B1	4	#10	1	34'-8"	597
B2	4	#10	STR	32'-0"	551
B3	4	#5	STR	32'-0"	134
B4	4	#4	STR	32'-0"	85
B5	8	#4	STR	2'-9"	15
D1	40	#6	STR	1'-6"	90
S1	32	#5	2	7'-7"	253
S2	14	#4	3	7'-7"	71
U1	4	#4	4	5'-6"	15
U2	6	#4	4	4'-10"	19
U3	2	#9	4	9'-10"	67

EPOXY COATED REINFORCING STEEL 1897 LBS

CLASS AA CONCRETE BREAKDOWN

TOTAL CLASS AA CONCRETE 9.8 C.Y.

HP 14 X 73 GALVANIZED STEEL PILES

No. 7 LIN. FT. 525

PILE DRIVING EQUIPMENT SETUP FOR HP 14 X 73 GALVANIZED STEEL PILES

NO: 7

PILE REDRIVES NO: 4

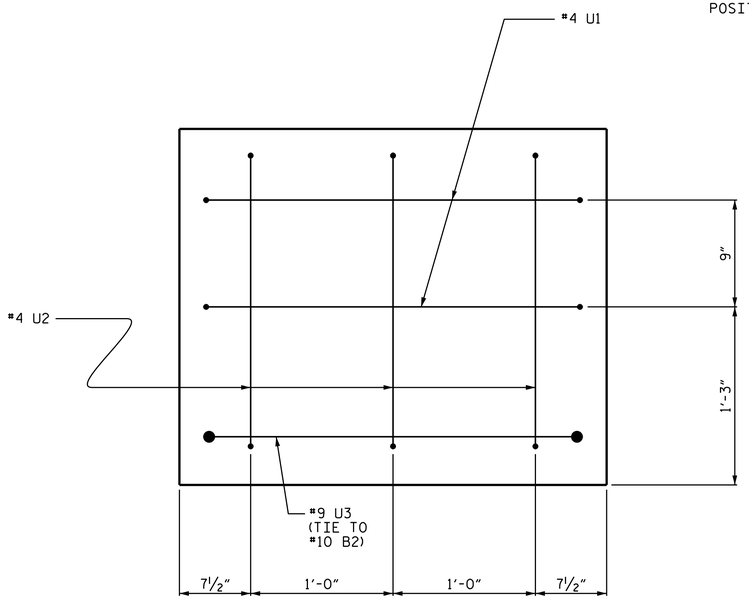

END OF CAP VIEW
(TYPICAL BOTH ENDS)

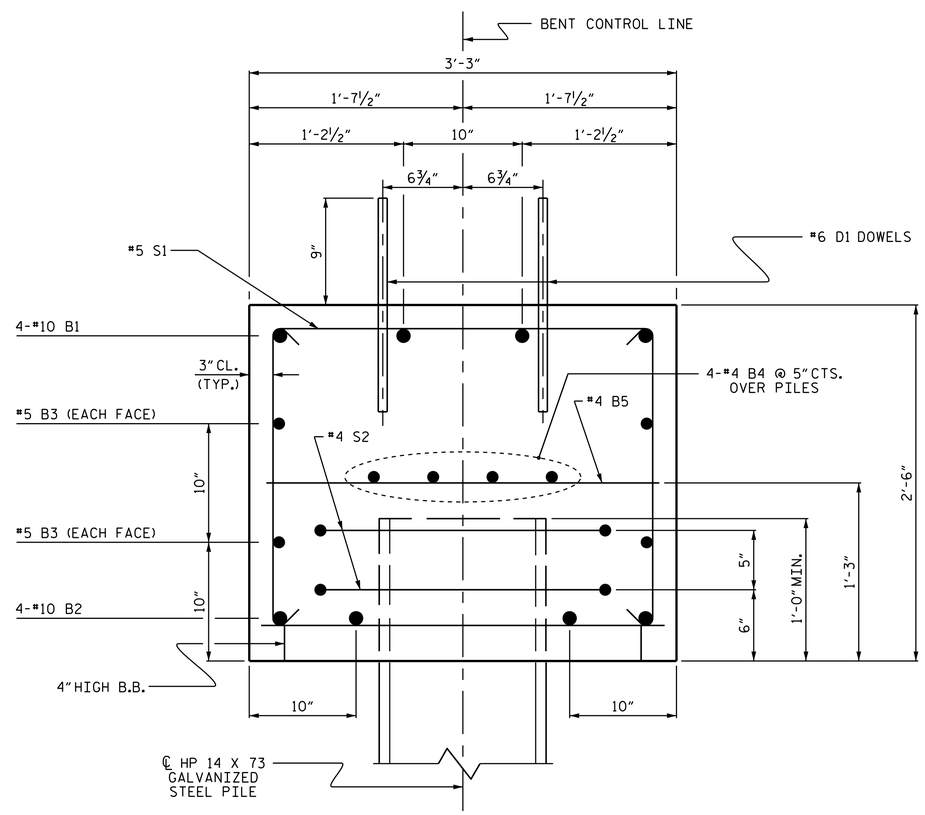

SECTION A-A

PROJECT NO. 17BP.2.R.95
BEAUFORT COUNTY
STATION: 16+80.00 -L-

SHEET 2 OF 2

STATE OF NORTH CAROLINA
DEPARTMENT OF TRANSPORTATION
RALEIGH

SUBSTRUCTURE

BENT No. 1

NORTH CAROLINA PROFESSIONAL SEAL 20125 ENGINEER MARSHALL G. CHECK, JR.
DocuSigned by: Marshall G. Check, Jr. 5FBCC2F3A4DC413...
10/14/2019

DOCUMENT NOT CONSIDERED FINAL UNLESS ALL SIGNATURES COMPLETED

TGS ENGINEERS
706 HILLSBOROUGH STREET
SUITE 200
RALEIGH, NC 27603
PH (919) 773-8887
CORP. LICENSE NO.: C-0275

REVISIONS						SHEET NO.
NO.	BY:	DATE:	NO.	BY:	DATE:	S-17
1			3			TOTAL SHEETS
2			4			20

ASSEMBLED BY : STM		DATE : 01/19	
CHECKED BY : MGC		DATE : 02/19	
DRAWN BY : DGE 05/10	REV. 6/17	MAA/THC	
CHECKED BY : MKT 05/10			

10/9/2019
X:\NCDOT\B-4709\Structures\FinalPlans\DGNs\401_035_B-4709_SMU_ B2_060014.dgn
Usersmassinople

STD. NO. 14" HP_BT_30_90S_<60'

DocuSign Envelope ID: 11FEA873-50EA-4A02-B448-8EAF94632600

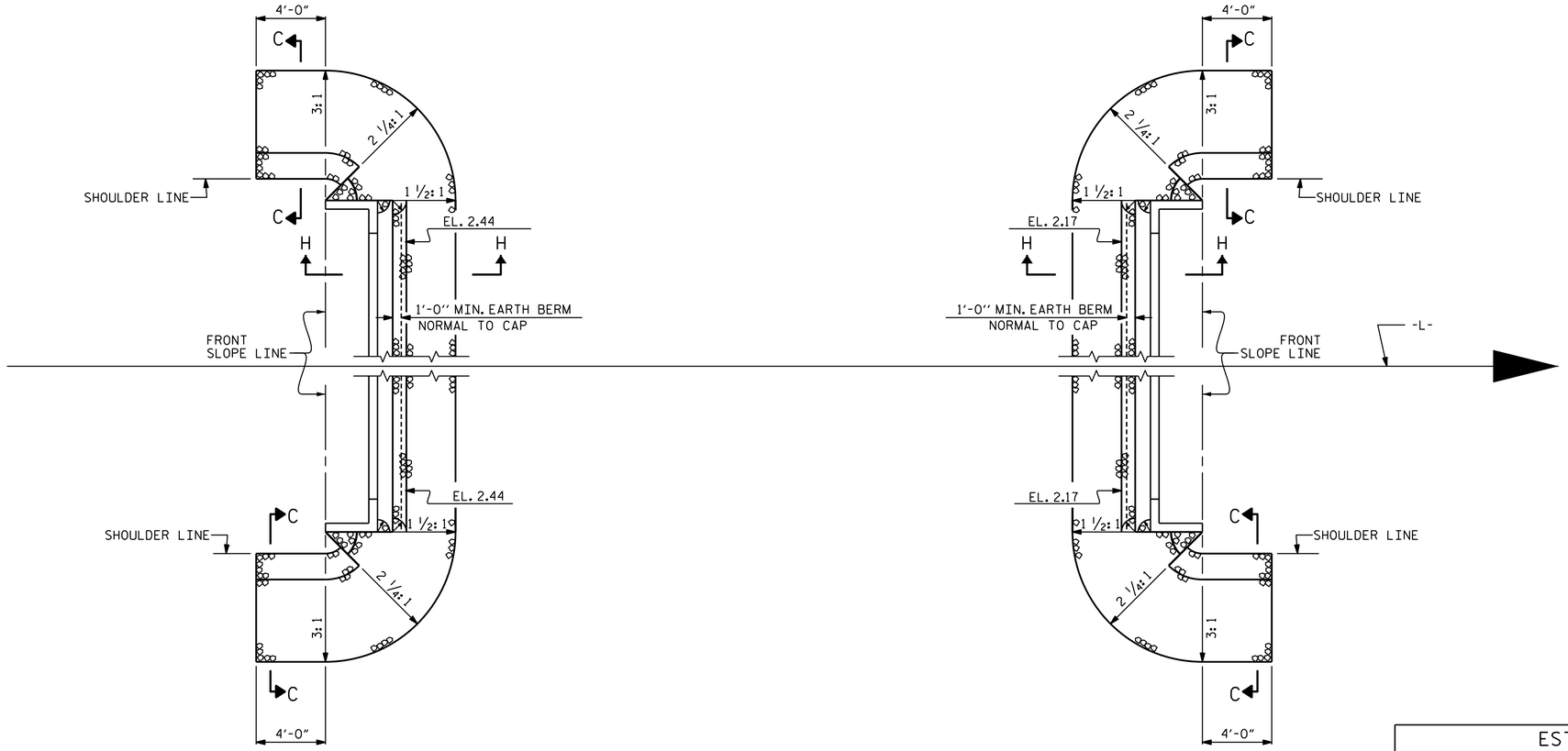

END BENT 1

END BENT 2

PLAN

ESTIMATED QUANTITIES		
BRIDGE @ STA. 16+80.00 -L-	RIP RAP CLASS II (2'-0" THICK)	GEOTEXTILE FOR DRAINAGE
	TONS	SQUARE YARDS
END BENT 1	120	135
END BENT 2	110	125

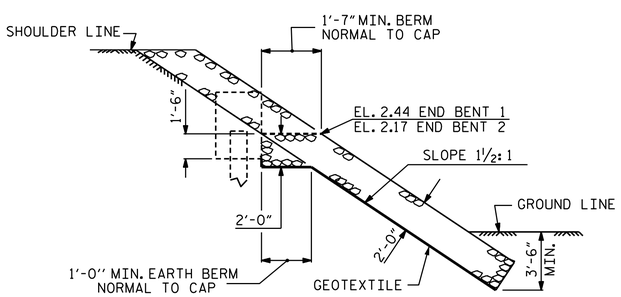

SECTION H-H

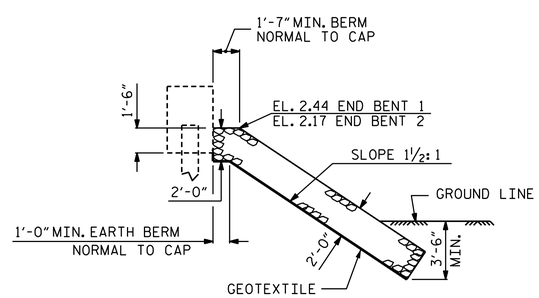

℄ SECTION
BERM RIP RAPPED

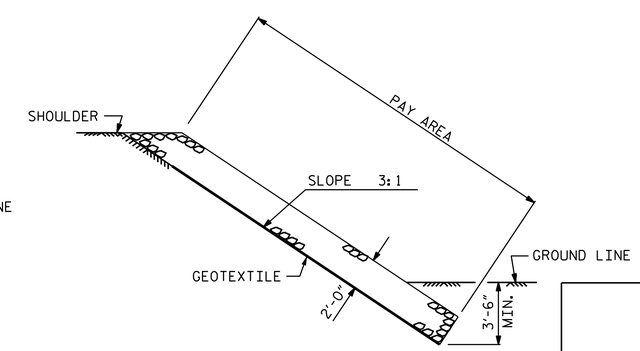

SECTION C-C

PROJECT NO. 17BP.2.R.95
BEAUFORT COUNTY
STATION: 16+80.00 -L-

NORTH CAROLINA PROFESSIONAL SEAL 20125 ENGINEER MARSHALL C. CREEK, JR.
DocuSigned by: Marshall C. Creek, Jr.
5FBCC2F3A4DC413...
10/14/2019

DOCUMENT NOT CONSIDERED FINAL UNLESS ALL SIGNATURES COMPLETED

TGS ENGINEERS
706 HILLSBOROUGH STREET
SUITE 200
RALEIGH, NC 27603
PH (919) 773-8887
CORP. LICENSE NO.: C-0275

STATE OF NORTH CAROLINA
DEPARTMENT OF TRANSPORTATION
RALEIGH

STANDARD

RIP RAP DETAILS

ASSEMBLED BY : STM	DATE : 01/19
CHECKED BY : MGC	DATE : 02/19

DRAWN BY : REK 1/84	REV. 10/1/11 MAA/GM
CHECKED BY : RDU 1/84	REV. 12/21/11 MAA/GM
	REV. 12/17 MAA/THC

REVISIONS						SHEET NO.
NO.	BY:	DATE:	NO.	BY:	DATE:	S-18
1			3			TOTAL SHEETS
2			4			20

10/1/2019
X:\NCDOT\B-4709\Structures\FinalPlans\DGNs\401_037_B-4709_SMU_ RR_060014.dgn
User:smassinople

STD. NO. RR1

DocuSign Envelope ID: 11FEA873-50EA-4A02-B448-8EAF94632600

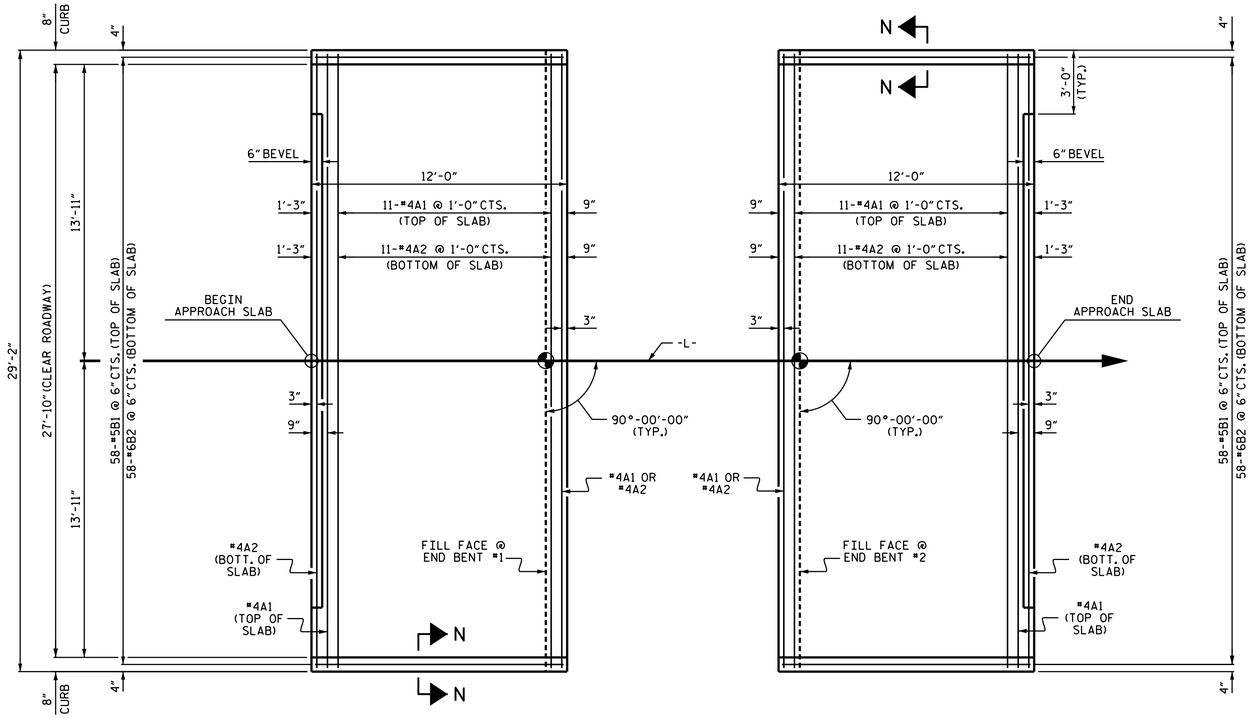

PLAN @ END BENT #1

PLAN @ END BENT #2

DIMENSIONS SHOWN ARE TYPICAL FOR BOTH APPROACH SLABS

NOTES

FOR BRIDGE APPROACH FILL INCLUDING GEOTEXTILE, 4"Ø DRAINAGE PIPE, AND SELECT MATERIAL BACKFILL, SEE ROADWAY PLANS.

GEOTEXTILE SHALL BE TYPE 1 IN ACCORDANCE WITH THE STANDARD SPECIFICATIONS SECTION 1056.

SELECT MATERIAL BACKFILL (CLASS V OR CLASS VI) SHALL BE IN ACCORDANCE WITH STANDARD SPECIFICATIONS SECTION 1016.

SELECT MATERIAL BACKFILL IS TO BE CONTINUOUS ALONG FILL FACE OF BACKWALL FROM OUTSIDE EDGE TO OUTSIDE EDGE OF APPROACH SLAB.

FOR THE 4"Ø DRAINAGE PIPE OUTLET(S), SEE ROADWAY STANDARD DRAWINGS.

AREA BETWEEN THE WINGWALL AND APPROACH SLAB SHALL BE GRADED TO DRAIN THE WATER AWAY FROM THE FILL FACE OF THE BRIDGE AND SHALL BE PAVED. SEE ROADWAY PLANS.

APPROACH SLAB GROOVING IS NOT REQUIRED.

BILL OF MATERIAL

APPROACH SLAB AT EB #1

BAR	NO.	SIZE	TYPE	LENGTH	WEIGHT
* A1	13	#4	STR	28'-10"	250
A2	13	#4	STR	28'-10"	250
* B1	58	#5	STR	11'-2"	676
B2	58	#6	STR	11'-8"	1016
REINFORCING STEEL				LBS.	1266
* EPOXY COATED REINFORCING STEEL				LBS.	926
CLASS AA CONCRETE				C. Y.	16.7

APPROACH SLAB AT EB #2

BAR	NO.	SIZE	TYPE	LENGTH	WEIGHT
* A1	13	#4	STR	28'-10"	250
A2	13	#4	STR	28'-10"	250
* B1	58	#5	STR	11'-2"	676
B2	58	#6	STR	11'-8"	1016
REINFORCING STEEL				LBS.	1266
* EPOXY COATED REINFORCING STEEL				LBS.	926
CLASS AA CONCRETE				C. Y.	16.7

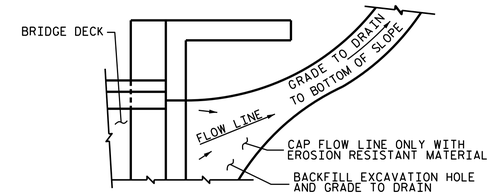

NOTE: IF THE APPROACH SLAB IS NOT CONSTRUCTED IMMEDIATELY AFTER THE BACKFILLING OF THE END BENT EXCAVATION, GRADE TO DRAIN TO THE BOTTOM OF THE SLOPE AND PROVIDE EROSION RESISTANT MATERIAL, SUCH AS FIBERGLASS ROVING OR AS DIRECTED BY THE ENGINEER TO PREVENT SOIL EROSION AND TO PROTECT THE AREA ADJACENT TO THE STRUCTURE. THE CONTRACTOR WILL BE REQUIRED TO REMOVE THESE MATERIALS PRIOR TO CONSTRUCTION OF THE APPROACH SLAB.

TEMPORARY DRAINAGE DETAIL

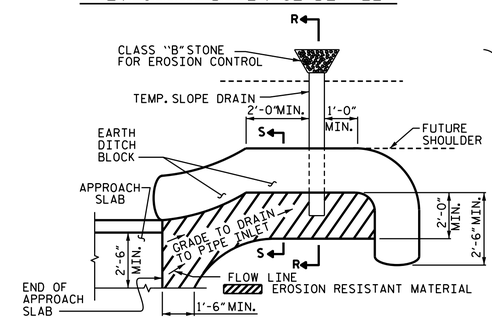

NOTE: IMMEDIATELY AFTER THE CONSTRUCTION OF THE APPROACH SLAB, THE CONTRACTOR SHALL PROVIDE TEMPORARY BERM AND SLOPE DRAIN. CONTRACTOR SHALL GRADE TO PIPE INLET AND PROVIDE EROSION RESISTANT MATERIAL AS SHOWN. THE EROSION RESISTANT MATERIAL SHALL BE EITHER 1) ASPHALT PLANT MIX, TYPE 1 OR TYPE 2, MIN. 2" DEPTH, 2) EROSION CONTROL MAT, OR 3) CONCRETE, AS DIRECTED BY THE ENGINEER. THE SLOPE DRAIN SHALL CONSIST OF A NON-PERFORATED TEMPORARY DRAINAGE PIPE, 12 INCHES IN DIAMETER.

PLAN VIEW

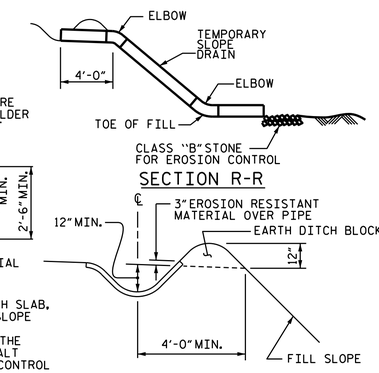

SECTION S-S

TEMPORARY BERM AND SLOPE DRAIN DETAILS

(TO BE USED WHEN SHOULDER BERM GUTTER IS REQUIRED)

SPLICE LENGTHS		
BAR SIZE	EPOXY COATED	UNCOATED
#4	2'-0"	1'-9"
#5	2'-6"	2'-2"
#6	3'-10"	2'-7"

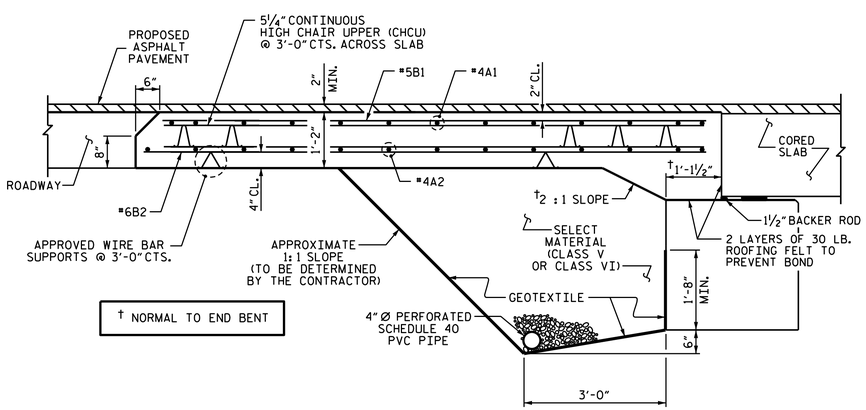

† NORMAL TO END BENT

SECTION THRU SLAB

(TYPE II - MODIFIED APPROACH FILL)

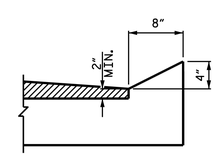

SECTION N-N

CURB DETAILS

PROJECT NO. 17BP.2.R.95

BEAUFORT COUNTY

STATION: 16+80.00 -L-

NORTH CAROLINA PROFESSIONAL SEAL 20125 ENGINEER MARSHALL G. CHECK, JR.

DocuSigned by: Marshall G. Check Jr. 5FBCC2F3A4DC413...

10/14/2019

DOCUMENT NOT CONSIDERED FINAL UNLESS ALL SIGNATURES COMPLETED

TGS ENGINEERS
706 HILLSBOROUGH STREET
SUITE 200
RALEIGH, NC 27603
PH (919) 773-8887
CORP. LICENSE NO.: C-0275

STATE OF NORTH CAROLINA
DEPARTMENT OF TRANSPORTATION
RALEIGH

STANDARD
BRIDGE APPROACH SLAB
FOR PRESTRESSED CONCRETE
CORED SLAB UNIT
(SUB-REGIONAL TIER)
90° SKEW

REVISIONS						
NO.	BY:	DATE:	NO.	BY:	DATE:	
1			3			
2			4			

SHEET NO. S-19

TOTAL SHEETS 20

ASSEMBLED BY : STM		DATE : 01/19	
CHECKED BY : MGC		DATE : 02/19	
DRAWN BY : SHS/MAA 5-09	REV. 12-17	MAA/THC	
CHECKED BY : BCH 5-09			

9/24/2019
X:\NCDOT\B-4709\Structures\FinalPlans\DGNs\401_039_B-4709_SMU_ AS_060014.dgn
User:smassinople

STD. NO. BAS_30_90S

DocuSign Envelope ID: 11FEA873-50EA-4A02-B448-8EAF94632600

STANDARD NOTES

DESIGN DATA:

SPECIFICATIONS	A.A.S.H.T.O. (CURRENT)
LIVE LOAD	SEE PLANS
IMPACT ALLOWANCE	SEE A.A.S.H.T.O.
STRESS IN EXTREME FIBER OF STRUCTURAL STEEL - AASHTO M270 GRADE 36	20,000 LBS. PER SQ. IN.
- AASHTO M270 GRADE 50W	27,000 LBS. PER SQ. IN.
- AASHTO M270 GRADE 50	27,000 LBS. PER SQ. IN.
REINFORCING STEEL IN TENSION - GRADE 60	24,000 LBS. PER SQ. IN.
CONCRETE IN COMPRESSION	1,200 LBS. PER SQ. IN.
CONCRETE IN SHEAR	SEE A.A.S.H.T.O.
STRUCTURAL TIMBER - TREATED OR UNTREATED EXTREME FIBER STRESS	1,800 LBS. PER SQ. IN.
COMPRESSION PERPENDICULAR TO GRAIN OF TIMBER	375 LBS. PER SQ. IN.
EQUIVALENT FLUID PRESSURE OF EARTH	30 LBS. PER CU. FT. (MINIMUM)

MATERIAL AND WORKMANSHIP:

EXCEPT AS MAY OTHERWISE BE SPECIFIED ON PLANS OR IN THE SPECIAL PROVISIONS, ALL MATERIAL AND WORKMANSHIP SHALL BE IN ACCORDANCE WITH THE 2018 "STANDARD SPECIFICATIONS FOR ROADS AND STRUCTURES" OF THE N. C. DEPARTMENT OF TRANSPORTATION.

STEEL SHEET PILING FOR PERMANENT OR TEMPORARY APPLICATIONS SHALL BE HOT ROLLED.

CONCRETE:

UNLESS OTHERWISE REQUIRED ON PLANS, CLASS A CONCRETE SHALL BE USED FOR ALL PORTIONS OF ALL STRUCTURES WITH THE EXCEPTION THAT: CLASS AA CONCRETE SHALL BE USED IN BRIDGE SUPERSTRUCTURES, ABUTMENT BACKWALLS, AND APPROACH SLABS; AND CLASS B CONCRETE SHALL BE USED FOR SLOPE PROTECTION AND RIP RAP.

CONCRETE CHAMFERS:

UNLESS OTHERWISE NOTED ON THE PLANS, ALL EXPOSED CORNERS ON STRUCTURES SHALL BE CHAMFERED ¾" WITH THE FOLLOWING EXCEPTIONS: TOP CORNERS OF CURBS MAY BE ROUNDED TO 1½" RADIUS WHICH IS BUILT INTO CURB FORMS; CORNERS OF TRANSVERSE FLOOR EXPANSION JOINTS SHALL BE ROUNDED WITH A ¼" FINISHING TOOL UNLESS OTHERWISE REQUIRED ON PLANS; AND CORNERS OF EXPANSION JOINTS IN THE ROADWAY FACES AND TOPS OF CURBS AND SIDEWALKS SHALL BE ROUNDED TO A ¼" RADIUS WITH A FINISHING STONE OR TOOL UNLESS OTHERWISE REQUIRED ON PLANS.

DOWELS:

DOWELS WHEN INDICATED ON PLANS AS FOR CULVERT EXTENSIONS, SHALL BE EMBEDDED AT LEAST 12" INTO THE OLD CONCRETE AND GROUTED INTO PLACE WITH 1:2 CEMENT MORTAR.

ALLOWANCE FOR DEAD LOAD DEFLECTION, SETTLEMENT, ETC. IN CASTING SUPERSTRUCTURES:

BRIDGES SHALL BE BUILT ON THE GRADE OR VERTICAL CURVE SHOWN ON PLANS. SLABS, CURBS AND PARAPETS SHALL CONFORM TO THE GRADE OR CURVE.

ALL DIMENSIONS WHICH ARE GIVEN IN SECTION AND ARE AFFECTED BY DEAD LOAD DEFLECTIONS ARE DIMENSIONS AT CENTER LINE OF BEARING UNLESS OTHERWISE NOTED ON PLANS. IN SETTING FORMS FOR STEEL BEAM BRIDGES AND PRESTRESSED CONCRETE GIRDER BRIDGES, ADJUSTMENTS SHALL BE MADE DUE TO THE DEAD LOAD DEFLECTIONS FOR THE ELEVATIONS SHOWN. WHERE BLOCKS ARE SHOWN OVER BEAMS FOR BUILDING UP TO THE SLAB, THE VERTICAL DIMENSIONS OF THE BLOCKS SHALL BE ADJUSTED BETWEEN BEARINGS TO COMPENSATE FOR DEAD LOAD DEFLECTIONS, VERTICAL CURVE ORDINATE, AND ACTUAL BEAM CAMBER. WHERE BOTTOM OF SLAB IS IN LINE WITH BOTTOM OF TOP FLANGES, DEPTH OF SLAB BETWEEN BEARINGS SHALL BE ADJUSTED TO COMPENSATE FOR DEAD LOAD DEFLECTION, VERTICAL CURVE ORDINATE, AND ACTUAL BEAM CAMBER.

IN SETTING FALSEWORK AND FORMS FOR REINFORCED CONCRETE SPANS, AN ALLOWANCE SHALL BE MADE FOR DEAD LOAD DEFLECTIONS, SETTLEMENT OF FALSEWORK, AND PERMANENT CAMBER WHICH SHALL BE PROVIDED FOR IN ADDITION TO THE ELEVATIONS SHOWN. AFTER REMOVAL OF THE FALSEWORK, THE FINISHED STRUCTURES SHALL CONFORM TO THE PROFILE AND ELEVATIONS SHOWN ON THE PLANS AND CONSTRUCTION ELEVATIONS FURNISHED BY THE ENGINEER.

DETAILED DRAWINGS FOR FALSEWORK OR FORMS FOR BRIDGE SUPERSTRUCTURE AND ANY STRUCTURE OR PARTS OF A STRUCTURE AS NOTED ON THE PLANS SHALL BE SUBMITTED TO THE ENGINEER FOR APPROVAL BEFORE CONSTRUCTION OF THE FALSEWORK OR FORMS IS STARTED.

REINFORCING STEEL:

ALL REINFORCING STEEL SHALL BE DEFORMED. DIMENSIONS RELATIVE TO PLACEMENT OF REINFORCING ARE TO CENTERS OF BARS UNLESS OTHERWISE INDICATED IN THE PLANS. DIMENSIONS ON BAR DETAILS ARE TO CENTERS OF BARS OR ARE OUT TO OUT AS INDICATED ON PLANS.

WIRE BAR SUPPORTS SHALL BE PROVIDED FOR REINFORCING STEEL WHERE INDICATED ON THE PLANS. WHEN BAR SUPPORT PIECES ARE PLACED IN CONTINUOUS LINES, THEY SHALL BE SO PLACED THAT THE ENDS OF THE SUPPORTING WIRES SHALL BE LAPPED TO LOCK LEGS ON ADJOINING PIECES.

STRUCTURAL STEEL:

AT THE CONTRACTOR'S OPTION, HE MAY SUBSTITUTE ⅞" Ø SHEAR STUDS FOR THE ¾" Ø STUDS SPECIFIED ON THE PLANS. THIS SUBSTITUTION SHALL BE MADE AT THE RATE OF 3 - ⅞" Ø STUDS FOR 4 - ¾" Ø STUDS, AND STUD SPACING CHANGES SHALL BE MADE AS NECESSARY TO PROVIDE THE SAME EQUIVALENT NUMBER OF ⅞" Ø STUDS ALONG THE BEAM AS SHOWN FOR ¾" Ø STUDS BASED ON THE RATIO OF 3 - ⅞" Ø STUDS FOR 4 - ¾" Ø STUDS. STUDS OF THE LENGTH SPECIFIED ON THE PLANS MUST BE PROVIDED. THE MAXIMUM SPACING SHALL BE 2'-0".

EXCEPT AT THE INTERIOR SUPPORTS OF CONTINUOUS BEAMS WHERE THE COVER PLATE IS IN CONTACT WITH BEARING PLATE, THE CONTRACTOR MAY, AT HIS OPTION, SUBSTITUTE FOR THE COVER PLATES DESIGNATED ON THE PLANS COVER PLATES OF THE EQUIVALENT AREA PROVIDED THESE PLATES ARE AT LEAST 5/16" IN THICKNESS AND DO NOT EXCEED A WIDTH EQUAL TO THE FLANGE WIDTH LESS 2" OR A THICKNESS EQUAL TO 2 TIMES THE FLANGE THICKNESS. THE SIZE OF FILLET WELDS SHALL CONFORM TO THE REQUIREMENTS OF THE CURRENT ANSI/AASHTO/AWS "BRIDGE WELDING CODE". ELECTROSLAG WELDING WILL NOT BE PERMITTED.

WITH THE SOLE EXCEPTION OF EDGES AT SURFACES WHICH BEAR ON OTHER SURFACES, ALL SHARP EDGES AND ENDS OF SHAPES AND PLATES SHALL BE SLIGHTLY ROUNDED BY SUITABLE MEANS TO A RADIUS OF APPROXIMATELY 1/16 INCH OR EQUIVALENT FLAT SURFACE AT A SUITABLE ANGLE PRIOR TO PAINTING, GALVANIZING, OR METALLIZING.

HANDRAILS AND POSTS:

METAL STANDARDS AND FACES OF THE CONCRETE END POSTS FOR THE METAL RAIL SHALL BE SET NORMAL TO THE GRADE OF THE CURB, UNLESS OTHERWISE SHOWN ON PLANS. THE METAL RAIL AND TOPS OF CONCRETE POSTS USED WITH THE ALUMINUM RAIL SHALL BE BUILT PARALLEL TO THE GRADE OF THE CURB.

METAL HANDRAILS SHALL BE IN ACCORDANCE WITH THE PLANS. RAILS SHALL BE AS MANUFACTURED FOR BRIDGE RAILING. CASTINGS SHALL BE OF A UNIFORM APPEARANCE. FINS AND OTHER DEFORMATIONS RESULTING FROM CASTING OR OTHERWISE SHALL BE REMOVED IN A MANNER SO THAT A UNIFORM COLORING OF THE COMPLETED CASTING SHALL BE OBTAINED. CASTINGS WITH DISCOLORATIONS OR OF NON-UNIFORM COLORING WILL NOT BE ACCEPTED. CERTIFIED MILL REPORTS ARE REQUIRED FOR METAL RAILS AND POSTS.

SPECIAL NOTES:

GENERALLY, IN CASE OF DISCREPANCY, THIS STANDARD SHEET OF NOTES SHALL GOVERN OVER THE SPECIFICATIONS, BUT THE REMAINDER OF THE PLANS SHALL GOVERN OVER NOTES HEREON, AND SPECIAL PROVISIONS SHALL GOVERN OVER ALL. SEE SPECIFICATIONS ARTICLE 105-4.

PROJECT NO. 17BP.2.R.95
BEAUFORT COUNTY
STATION: 16+80.00 -L-

STATE OF NORTH CAROLINA
DEPARTMENT OF TRANSPORTATION
RALEIGH

STANDARD NOTES

REVISIONS						SHEET NO.
NO.	BY:	DATE:	NO.	BY:	DATE:	S-20
1			3			TOTAL SHEETS
2			4			20

STD. NO. SN

REV. 6-16-95 EEM (✓) RGW REV. 5-7-03 RWW (✓) JTE REV. 10-1-11 MAA (✓) GM
REV. 8-16-99 RWW (✓) LES REV. 5-1-06 TLA (✓) GM REV. 12-17 MAA (✓) THC

9/24/2019
X:\NCDOT\B-4709\Structures\Final Plans\DGNs\401_041_B-4709_SMU_ NOTES_060014.dgn
User:smassinople