DocuSign Envelope ID: 05DC3F60-E828-43B7-A744-8FEA1EE577CE

09/08/99

PROJECT: BP2.R001

CONTRACT: DB00557

See Sheet 1A For Index of Sheets
See Sheet 1B For Conventional Plan Sheet Symbols
See Sheets RW01 Thru RW04 For Right of Way Plan Sheets

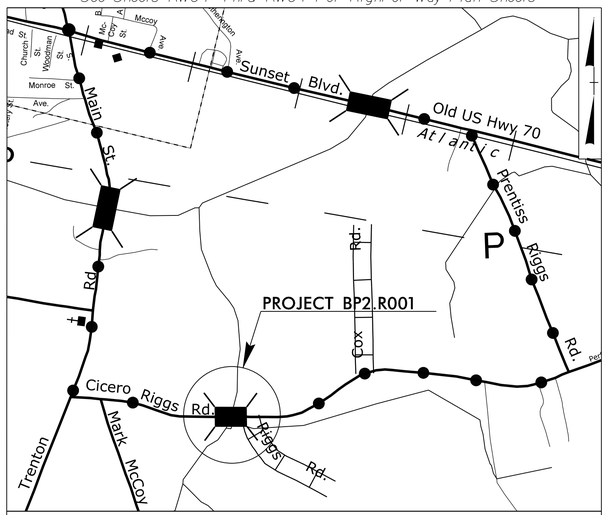

VICINITY MAP

DETOUR ROUTE

STATE OF NORTH CAROLINA
DIVISION OF HIGHWAYS

CRAVEN COUNTY

STATE	STATE PROJECT REFERENCE NO.	SHEET NO.	TOTAL SHEETS
N.C.	BP2.R001	1	

STATE PROJ. NO.	F. A. PROJ. NO.	DESCRIPTION
BP2.R001.1	N/A	PE
BP2.R001.2	N/A	R/W & UTILITIES
BP2.R001.3	N/A	CONST.

LOCATION: BRIDGE NO. 66 ON SR 1232 (CICERO RIGGS ROAD) OVER GRAPE BRANCH CANAL

TYPE OF WORK: GRADING, DRAINAGE, PAVING, AND STRUCTURE

NAD 83/NA 2011

4

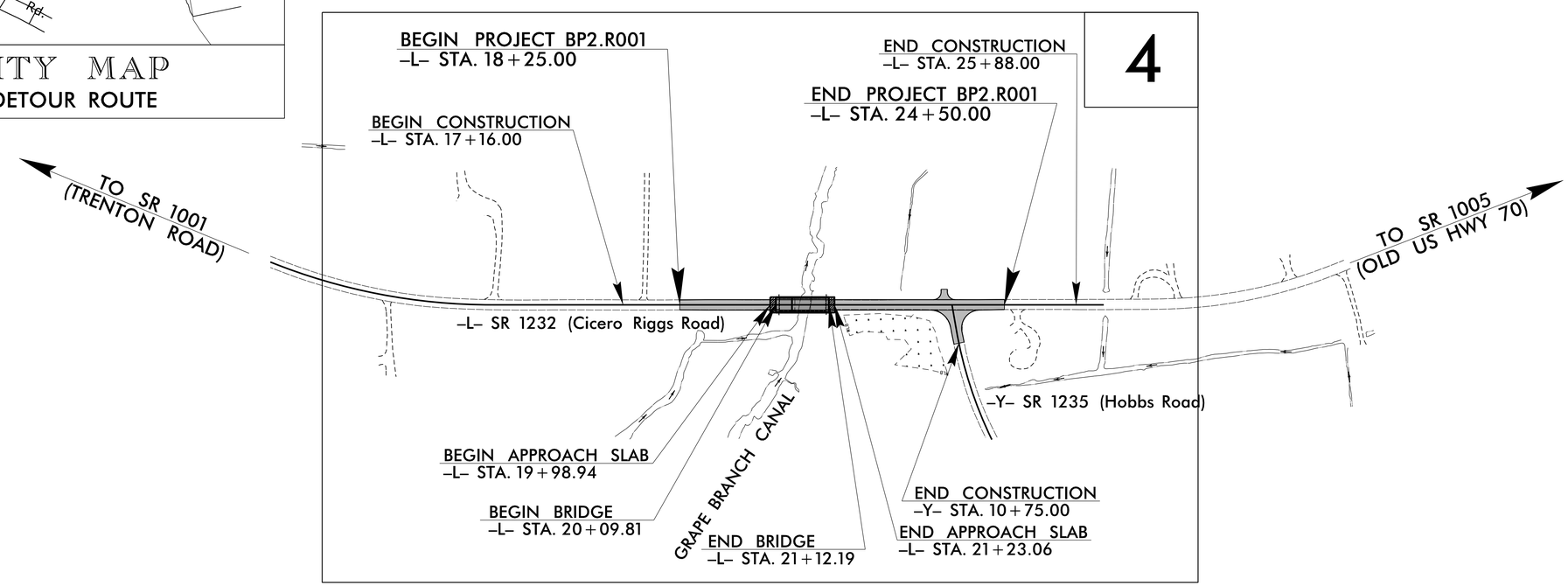

DOCUMENT NOT CONSIDERED FINAL
UNLESS ALL SIGNATURES COMPLETED

GRAPHIC SCALES

50 25 0 50 100
PLANS

50 25 0 50 100
PROFILE (HORIZONTAL)

10 5 0 10 20
PROFILE (VERTICAL)

DESIGN DATA

ADT 2023 = 304
ADT 2040 = 460
K = %
D = %
T = % *
V = 60 MPH
* TTST = DUAL =
FUNC CLASS = RURAL LOCAL

"SUB-REGIONAL TIER"

PROJECT LENGTH

LENGTH ROADWAY TIP PROJECT BP2.R001 = 0.099 MILES
LENGTH STRUCTURE TIP PROJECT BP2.R001 = 0.019 MILES
TOTAL LENGTH TIP PROJECT BP2.R001 = 0.118 MILES

Prepared In the Office of:

TRANSYSTEMS

1 Glenwood Avenue
Raleigh, NC 27603
Tel:919.789.9977
Fax:919.789.9591
License: F-0453

2018 STANDARD SPECIFICATIONS

RIGHT OF WAY DATE:
JULY 20, 2022

LETTING DATE:
MAY 10, 2023

RAJIT RAMKUMAR, PE, LEED AP
PROJECT ENGINEER

DANIEL W. GARDNER, JR., PE
PROJECT DESIGN ENGINEER

MICHAEL AMAN, PE
NCDOT CONTACT

HYDRAULICS ENGINEER

2023.03.16
DocuSigned by:
Brian A. Mazzeldi
7E5A9AD4E75407
SIGNATURE: P.E.
NORTH CAROLINA PROFESSIONAL SEAL 33719 ENGINEER BRIAN A. MAZZELDI

ROADWAY DESIGN ENGINEER

2023.03.16
DocuSigned by:
Daniel W. Gardner, Jr.
SIGNATURE: P.E.
NORTH CAROLINA PROFESSIONAL SEAL 033871 ENGINEER DANIEL W. GARDNER, JR.

STATE OF NORTH CAROLINA DEPARTMENT OF TRANSPORTATION

3/13/2023
...\Proj\BP2.R001_Rdy_tsh.dgn
USER:dgardner

DocuSign Envelope ID: 84A99F31-7826-4C7A-A1D5-71DF2D5CCA0E

8/17/99

TRANSYSTEMS
1 Glenwood Avenue
Raleigh, NC 27603
Tel:919.789.9977
Fax:919.789.9591
License: F-0453

PROJECT REFERENCE NO.	SHEET NO.
BP2.R001	1A

ROADWAY DESIGN ENGINEER

NORTH CAROLINA PROFESSIONAL SEAL 033871 ENGINEER DANIEL W. GARDNER, JR.

2023-03-13 DocuSigned by: Daniel W. Gardner, Jr. 4290D7EA4DCF4ED...

DOCUMENT NOT CONSIDERED FINAL UNLESS ALL SIGNATURES COMPLETED

INDEX OF SHEETS

SHEET NUMBER	SHEET
1	TITLE SHEET
1A	INDEX OF SHEETS, GENERAL NOTES, AND LIST OF STANDARD DRAWINGS
1B	CONVENTIONAL PLAN SHEET SYMBOLS
2A-1 THRU 2A-2	PAVEMENT SCHEDULE, WEDGING DETAIL, AND TYPICAL SECTIONS
2C-1	GUARDRAIL INSTALLATION DETAIL
2C-2	GUARDRAIL TYPE III ANCHOR UNIT DETAIL
2C-3	ROCK PLATING DETAIL
3B-1	SUMMARY OF EARTHWORK, GUARDRAIL SUMMARY, ASPHALT PAVEMENT REMOVAL SUMMARY, AND SHOULDER BERM GUTTER SUMMARY
3D-1	DRAINAGE SUMMARY
3G-1	GEOTECHNICAL SUMMARIES
4	PLAN SHEET
5	PROFILE SHEET
RW01 THRU RW04	RIGHT OF WAY PLAN SHEETS
TMP-1 THRU TMP-2	TRAFFIC MANAGEMENT PLANS
PMP-1 THRU PMP-2	PAVEMENT MARKING PLANS
EC-1 THRU EC-5	EROSION CONTROL PLANS
RF-1	REFORESTATION PLANS
UC-1 THRU UC-5	UTILITIES CONSTRUCTION PLANS
UO-1 THRU UO-2	UTILITIES BY OTHERS PLANS
X-1	CROSS-SECTION INDEX SHEET
X-1A	CROSS-SECTION SUMMARY SHEET
X-1 THRU X-6	CROSS-SECTIONS
S-1 THRU S-25	STRUCTURE PLANS

GENERAL NOTES:

2018 SPECIFICATIONS
EFFECTIVE: 01-16-2018
REVISED:

GRADING AND SURFACING OR RESURFACING AND WIDENING:

THE GRADE LINES SHOWN DENOTE THE FINISHED ELEVATION OF THE PROPOSED SURFACING AT GRADE POINTS SHOWN ON THE TYPICAL SECTIONS. WHERE NO GRADE LINES ARE SHOWN, THE PROFILES SHOWN DENOTE THE TOP ELEVATION OF THE EXISTING PAVEMENT ALONG THE CENTER LINE OF SURVEY ON WHICH THE PROPOSED RESURFACING WILL BE PLACED. GRADE LINES MAY BE ADJUSTED BY THE ENGINEER IN ORDER TO SECURE A PROPER TIE-IN.

CLEARING:

CLEARING ON THIS PROJECT SHALL BE PERFORMED TO THE LIMITS ESTABLISHED BY METHOD II.

SUPERELEVATION:

ALL CURVES ON THIS PROJECT SHALL BE SUPERELEVATED IN ACCORDANCE WITH STD. NO. 225.04 USING THE RATE OF SUPERELEVATION AND RUNOFF SHOWN ON THE PLANS. SUPERELEVATION IS TO BE REVOLVED ABOUT THE GRADE POINTS SHOWN ON THE TYPICAL SECTIONS.

SHOULDER CONSTRUCTION:

ASPHALT, EARTH, AND CONCRETE SHOULDER CONSTRUCTION ON THE HIGH SIDE OF SUPERELEVATED CURVES SHALL BE IN ACCORDANCE WITH STD. NO. 560.01

SIDE ROADS:

THE CONTRACTOR WILL BE REQUIRED TO DO ALL NECESSARY WORK TO PROVIDE SUITABLE CONNECTIONS WITH ALL ROADS, STREETS, AND DRIVES ENTERING THIS PROJECT. THIS WORK WILL BE PAID FOR AT THE CONTRACT UNIT PRICE FOR THE PARTICULAR ITEMS INVOLVED.

SUBSURFACE DRAINS:

SUBSURFACE DRAINS SHALL BE CONSTRUCTED IN ACCORDANCE WITH STD. NO. 815.02 AT LOCATIONS DIRECTED BY THE ENGINEER.

GUARDRAIL:

THE GUARDRAIL LOCATIONS SHOWN ON THE PLANS MAY BE ADJUSTED DURING CONSTRUCTION AS DIRECTED BY THE ENGINEER. THE CONTRACTOR SHOULD CONSULT WITH THE ENGINEER PRIOR TO ORDERING GUARDRAIL MATERIAL.

TEMPORARY SHORING:

SHORING REQUIRED FOR THE MAINTENANCE OF TRAFFIC WILL BE PAID FOR AS "EXTRA WORK" IN ACCORDANCE WITH SECTION 104-7.

SUBSURFACE PLNAS:

NO SUBSURFACE PLANS ARE AVAILABLE ON THIS PROJECT. THE CONTRACTOR SHOULD MAKE HIS OWN INVESTIGATIONS AS TO THE SUBSURFACE CONDITIONS.

END BENTS:

THE ENGINEER SHALL CHECK THE STRUCTURE END BENT PLANS, DETAILS, AND CROSS-SECTION PRIOR TO SETTING OF THE SLOPE STAKES FOR THE EMBANKMENT OR EXCAVATION APPROACHING A BRIDGE.

UTILITIES:

UTILITY OWNERS ON THIS PROJECT ARE Power - Duke Energy, Telecom - Centurylink, and Water - Craven County.

ANY RELOCATION OF EXISTING UTILITIES WILL BE ACCOMPLISHED BY OTHERS, EXCEPT AS SHOWN ON THE PLANS.

EFF. 01-16-2018
REV.

2018 ROADWAY ENGLISH STANDARD DRAWINGS

The following Roadway Standards as appear in "Roadway Standard Drawings" Highway Design Branch - N. C. Department of Transportation - Raleigh, N. C., Dated January, 2018 are applicable to this project and by reference hereby are considered a part of these plans:

STD.NO.	TITLE
DIVISION 2 - EARTHWORK	
200.02	Method of Clearing - Method II
225.02	Guide for Grading Subgrade - Secondary and Local
225.04	Method of Obtaining Superelevation - Two Lane Pavement
225.06	Method of Grading Sight Distance at Intersections
275.01	Rock Plating (Use Special Detail)
DIVISION 3 - PIPE CULVERTS	
300.01	Method of Pipe Installation
310.10	Driveway Pipe Construction
DIVISION 4 - MAJOR STRUCTURES	
422.02	Bridge Approach Fills - Type II Modified Approach Fill
DIVISION 5 - SUBGRADE, BASES AND SHOULDERS	
560.01	Method of Shoulder Construction - High Side of Superelevated Curve - Method I
DIVISION 8 - INCIDENTALS	
815.02	Subsurface Drain
840.00	Concrete Base Pad for Drainage Structures
840.25	Anchorage for Frames - Brick or Concrete or Precast
840.29	Frame and Narrow Slot Flat Grates
840.35	Traffic Bearing Grated Drop Inlet - for Cast Iron Double Frame and Grates
840.46	Traffic Bearing Precast Drainage Structure
840.66	Drainage Structure Steps
846.01	Concrete Curb, Gutter and Curb & Gutter
846.04	Drop Inlet Installation in Shoulder Berm Gutter
848.04	Street Turnout
862.01	Guardrail Placement
862.02	Guardrail Installation
862.03	Structure Anchor Units
876.02	Guide for Rip Rap at Pipe Outlets

3/13/2023
...\Proj\BP2.R001.1_Rdy_psh_1A.dgn
USERdgardner

9/10/2021

PROJECT REFERENCE NO.	SHEET NO.
BP2.R001	1B

STATE OF NORTH CAROLINA, DIVISION OF HIGHWAYS

CONVENTIONAL PLAN SHEET SYMBOLS

Note: Not to Scale

BOUNDARIES AND PROPERTY:

- State Line
- County Line
- Township Line
- City Line
- Reservation Line
- Property Line
- Existing Iron Pin (EIP) — EIP
- Computed Property Corner
- Existing Concrete Monument (ECM) — ECM
- Parcel/Sequence Number — 123
- Existing Fence Line
- Proposed Woven Wire Fence
- Proposed Chain Link Fence
- Proposed Barbed Wire Fence
- Existing Wetland Boundary — WLB
- Proposed Wetland Boundary — WLB
- Existing Endangered Animal Boundary — EAB
- Existing Endangered Plant Boundary — EPB
- Existing Historic Property Boundary — HPB
- Known Contamination Area: Soil — S
- Potential Contamination Area: Soil — S
- Known Contamination Area: Water — W
- Potential Contamination Area: Water — W
- Contaminated Site: Known or Potential

BUILDINGS AND OTHER CULTURE:

- Gas Pump Vent or U/G Tank Cap
- Sign — S
- Well — W
- Small Mine
- Foundation
- Area Outline
- Cemetery
- Building
- School
- Church
- Dam

HYDROLOGY:

- Stream or Body of Water
- Hydro, Pool or Reservoir
- Jurisdictional Stream — JS
- Buffer Zone 1 — BZ 1
- Buffer Zone 2 — BZ 2
- Flow Arrow
- Disappearing Stream
- Spring
- Wetland
- Proposed Lateral, Tail, Head Ditch — FLOW
- False Sump

RAILROADS:

- Standard Gauge — CSX TRANSPORTATION
- RR Signal Milepost — MILEPOST 35
- Switch — SWITCH
- RR Abandoned
- RR Dismantled

RIGHT OF WAY & PROJECT CONTROL:

- Primary Horiz Control Point
- Primary Horiz and Vert Control Point
- Secondary Horiz and Vert Control Point
- Vertical Benchmark
- Existing Right of Way Monument
- Proposed Right of Way Monument (Rebar and Cap)
- Proposed Right of Way Monument (Concrete)
- Existing Permanent Easement Monument
- Proposed Permanent Easement Monument (Rebar and Cap)
- Existing C/A Monument
- Proposed C/A Monument (Rebar and Cap)
- Proposed C/A Monument (Concrete)
- Existing Right of Way Line
- Proposed Right of Way Line — RW
- Existing Control of Access Line — CA
- Proposed Control of Access Line — CA
- Proposed ROW and CA Line — RW CA
- Existing Easement Line — E
- Proposed Temporary Construction Easement — E
- Proposed Temporary Drainage Easement — TDE
- Proposed Permanent Drainage Easement — PDE
- Proposed Permanent Drainage/Utility Easement — DUE
- Proposed Permanent Utility Easement — PUE
- Proposed Temporary Utility Easement — TUE
- Proposed Aerial Utility Easement — AUE

ROADS AND RELATED FEATURES:

- Existing Edge of Pavement
- Existing Curb
- Proposed Slope Stakes Cut — C
- Proposed Slope Stakes Fill — F
- Proposed Curb Ramp — CR
- Existing Metal Guardrail
- Proposed Guardrail
- Existing Cable Guiderail
- Proposed Cable Guiderail
- Equality Symbol
- Pavement Removal

VEGETATION:

- Single Tree
- Single Shrub
- Hedge
- Woods Line
- Orchard
- Vineyard — Vineyard

EXISTING STRUCTURES:

MAJOR:

- Bridge, Tunnel or Box Culvert — CONC
- Bridge Wing Wall, Head Wall and End Wall — CONC WW

MINOR:

- Head and End Wall — CONC HW
- Pipe Culvert
- Footbridge
- Drainage Box: Catch Basin, DI or JB — CB
- Paved Ditch Gutter
- Storm Sewer Manhole — S
- Storm Sewer — S

UTILITIES:

** SUE – Subsurface Utility Engineering*
LOS – Level of Service – A,B,C or D (Accuracy)

POWER:

- Existing Power Pole
- Proposed Power Pole
- Existing Joint Use Pole
- Proposed Joint Use Pole
- Power Manhole — P
- Power Line Tower
- Power Transformer
- U/G Power Cable Hand Hole — HH
- H–Frame Pole
- U/G Power Line Test Hole (SUE – LOS A)*
- U/G Power Line (SUE – LOS B)* — P
- U/G Power Line (SUE – LOS C)* — P
- U/G Power Line (SUE – LOS D)* — P

TELEPHONE:

- Existing Telephone Pole
- Proposed Telephone Pole
- Telephone Manhole — T
- Telephone Pedestal — T
- Telephone Cell Tower
- U/G Telephone Cable Hand Hole — HH
- U/G Telephone Test Hole (SUE – LOS A)*
- U/G Telephone Cable (SUE – LOS B)* — T
- U/G Telephone Cable (SUE – LOS C)* — T
- U/G Telephone Cable (SUE – LOS D)* — T
- U/G Telephone Conduit (SUE – LOS B)* — TC
- U/G Telephone Conduit (SUE – LOS C)* — TC
- U/G Telephone Conduit (SUE – LOS D)* — TC
- U/G Fiber Optics Cable (SUE – LOS B)* — T FO
- U/G Fiber Optics Cable (SUE – LOS C)* — T FO
- U/G Fiber Optics Cable (SUE – LOS D)* — T FO

WATER:

- Water Manhole — W
- Water Meter
- Water Valve
- Water Hydrant
- U/G Water Line Test Hole (SUE – LOS A)*
- U/G Water Line (SUE – LOS B)* — W
- U/G Water Line (SUE – LOS C)* — W
- U/G Water Line (SUE – LOS D)* — W
- Above Ground Water Line — A/G Water

TV:

- TV Pedestal — C
- TV Tower
- U/G TV Cable Hand Hole — HH
- U/G TV Test Hole (SUE – LOS A)*
- U/G TV Cable (SUE – LOS B)* — TV
- U/G TV Cable (SUE – LOS C)* — TV
- U/G TV Cable (SUE – LOS D)* — TV
- U/G Fiber Optic Cable (SUE – LOS B)* — TV FO
- U/G Fiber Optic Cable (SUE – LOS C)* — TV FO
- U/G Fiber Optic Cable (SUE – LOS D)* — TV FO

GAS:

- Gas Valve
- Gas Meter
- U/G Gas Line Test Hole (SUE – LOS A)*
- U/G Gas Line (SUE – LOS B)* — G
- U/G Gas Line (SUE – LOS C)* — G
- U/G Gas Line (SUE – LOS D)* — G
- Above Ground Gas Line — A/G Gas

SANITARY SEWER:

- Sanitary Sewer Manhole
- Sanitary Sewer Cleanout
- U/G Sanitary Sewer Line — SS
- Above Ground Sanitary Sewer — A/G Sanitary Sewer
- SS Force Main Line Test Hole (SUE – LOS A)*
- SS Force Main Line (SUE – LOS B)* — FSS
- SS Force Main Line (SUE – LOS C)* — FSS
- SS Force Main Line (SUE – LOS D)* — FSS

MISCELLANEOUS:

- Utility Pole
- Utility Pole with Base
- Utility Located Object
- Utility Traffic Signal Box — S
- Utility Unknown U/G Line (SUE – LOS B)* — ?UTL
- U/G Tank; Water, Gas, Oil
- Underground Storage Tank, Approx. Loc. — UST
- A/G Tank; Water, Gas, Oil
- Geoenvironmental Boring
- Abandoned According to Utility Records — AATUR
- End of Information — E.O.I.

DocuSign Envelope ID: 84A99F31-7826-4C7A-A1D5-71DF2D5CCA0E

6/2/99

PROJECT REFERENCE NO.	SHEET NO.
BP2.R001	2A-1

ROADWAY DESIGN ENGINEER

NORTH CAROLINA PROFESSIONAL SEAL 033871 ENGINEER DANIEL W. GARDNER JR.

2023/03/13 DocuSigned by: Daniel W. Gardner, Jr. C2B0FFA6A7CF4C...

DOCUMENT NOT CONSIDERED FINAL UNLESS ALL SIGNATURES COMPLETED

TRANSYSTEMS
1 Glenwood Avenue
Raleigh, NC 27603
Tel:919.789.9977
Fax:919.789.9591
License: F-0453

FINAL PAVEMENT SCHEDULE

C1	PROP. APPROX. 1½" ASPHALT CONCRETE SURFACE COURSE, TYPE S9.5B, AT AN AVERAGE RATE OF 165 LBS. PER SQ. YD.	R	PROP. CONCRETE SHOULDER BERM GUTTER.
C2	PROP. APPROX. 3" ASPHALT CONCRETE SURFACE COURSE, TYPE S9.5B, AT AN AVERAGE RATE OF 165 LBS. PER SQ. YD. IN EACH OF TWO LAYERS.	T	EARTH MATERIAL.
C3	PROP. VAR. DEPTH ASPHALT CONCRETE SURFACE COURSE, TYPE S9.5B, AT AN AVERAGE RATE OF 110 LBS. PER SQ. YD. PER 1" DEPTH. TO BE PLACED IN LAYERS NOT TO EXCEED 1½" IN DEPTH.	U	EXISTING PAVEMENT.
E1	PROP. APPROX. 5" ASPHALT CONCRETE BASE COURSE, TYPE B25.0C, AT AN AVERAGE RATE OF 570 LBS. PER SQ. YD.	V	VARIABLE DEPTH MILLING (0" TO 1.5").
E2	PROP. VAR. DEPTH ASPHALT CONCRETE BASE COURSE, TYPE B25.0C, AT AN AVERAGE RATE OF 114 LBS. PER SQ. YD. PER 1" DEPTH. TO BE PLACED IN LAYERS NOT LESS THAN 3" IN DEPTH OR GREATER THAN 5½" IN DEPTH.	W	VARIABLE DEPTH ASPHALT PAVEMENT (SEE STANDARD WEDGING DETAIL).

NOTE: PAVEMENT EDGE SLOPES ARE 1:1 UNLESS SHOWN OTHERWISE.

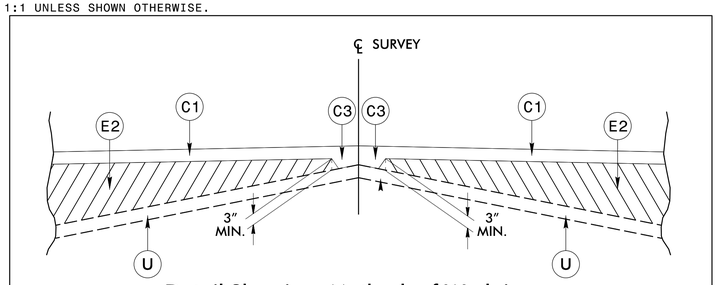

Detail Showing Method of Wedging

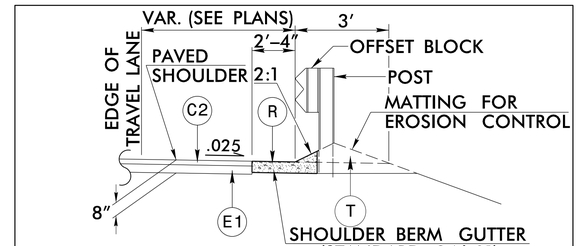

DETAIL SHOWING SHOULDER BERM GUTTER
USE WITH TYPICAL SECTION NO. 2
(SEE PLANS FOR LOCATIONS)

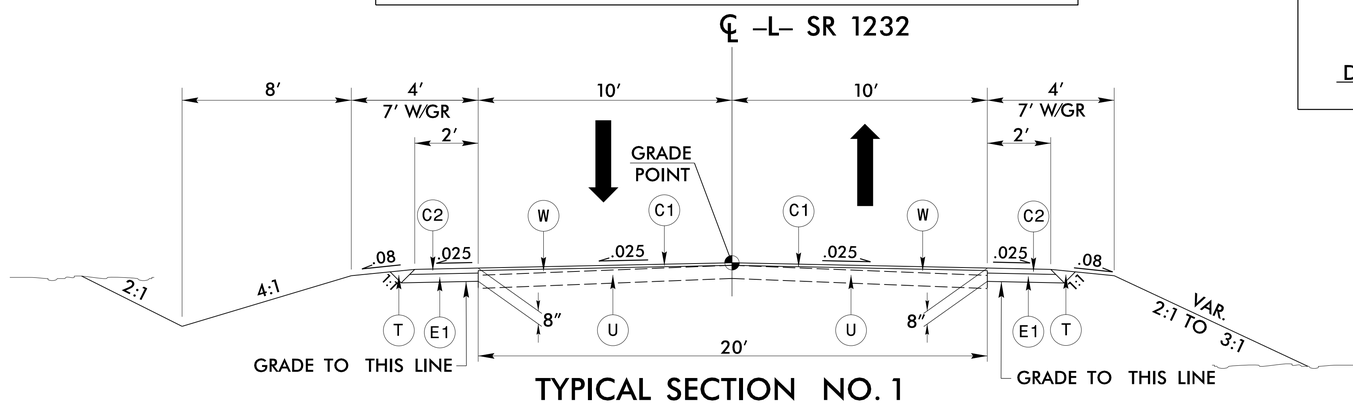

TYPICAL SECTION NO. 1

USE TYPICAL SECTION NO. 1 AS FOLLOWS
-L- STA 18+75.00 TO STA 19+61.00
-L- STA. 21+61.00 TO STA. 24+00.00

NOTE: TRANSITION FROM EXISTING TO TYPICAL SECTION NO. 1 -L- STA. 18+25.00 TO STA. 18+75.00
TRANSITION FROM TYPICAL SECTION NO. 1 TO EXISTING -L STA. 24+00.00 TO STA. 24+50.00

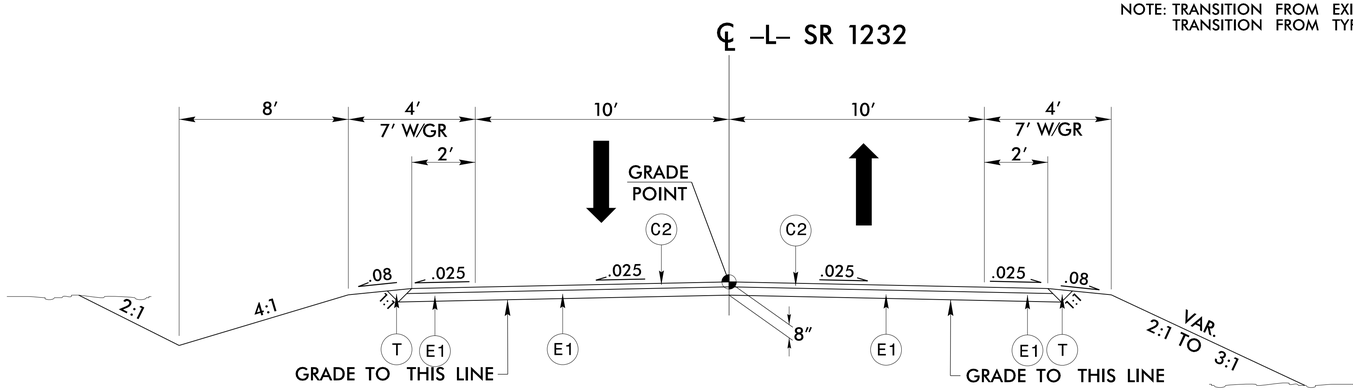

TYPICAL SECTION NO. 2

USE TYPICAL SECTION NO. 2 AS FOLLOWS
-L- STA 19+61.00 TO STA 20+09.81 (BEGIN BRIDGE)
-L- STA. 21+12.19 (END BRIDGE) TO STA. 21+61.00

3/13/2023
BP2_R001_1_Rdy_typ.dgn
jISFRidgeder

DocuSign Envelope ID: 84A99F31-7826-4C7A-A1D5-71DF2D5CCA0E

6/2/99

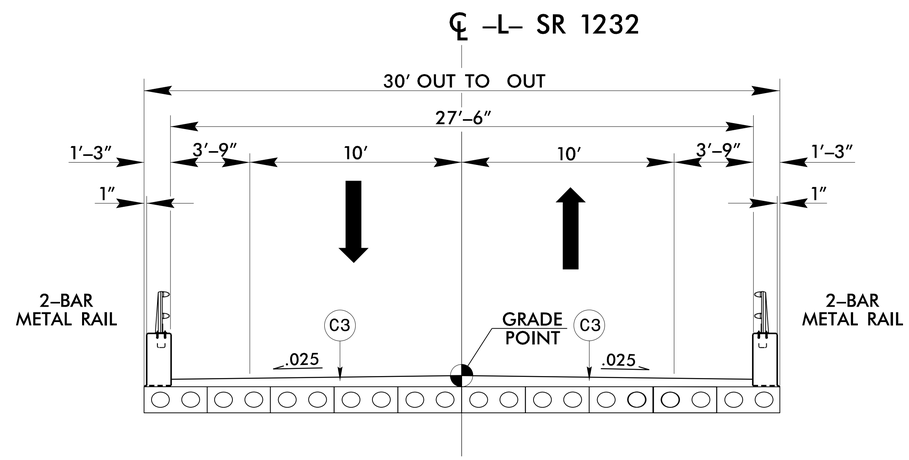

TYPICAL SECTION NO. 3

USE TYPICAL SECTION NO. 3 AS FOLLOWS
–L– STA 20+09.81 (BEGIN BRIDGE) TO STA 21+12.19 (END BRIDGE)

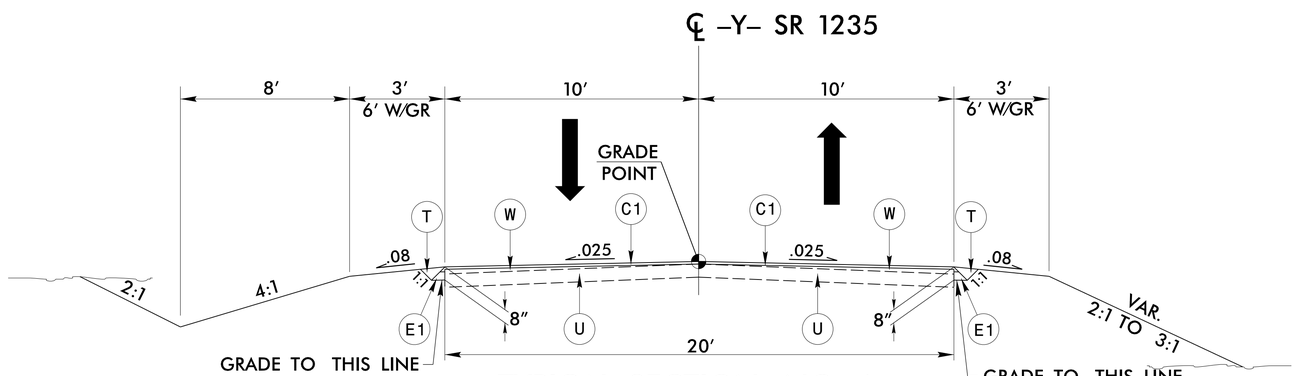

TYPICAL SECTION NO. 4

USE TYPICAL SECTION NO. 4 AS FOLLOWS
–Y– STA 10+53.76 TO STA 10+75.00

INCIDENTAL MILLING DETAIL

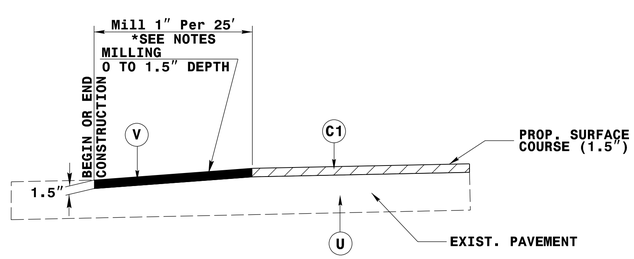

–L– STA. 18+25.00 TO STA. 18+62.50
–L– STA. 24+12.50 TO STA. 24+50.00
–Y– STA. 10+37.50 TO STA. 10+75.00

*NOTES: MIRROR FOR END OF CONSTRUCTION
MILL AS DIRECTED BY ENGINEER

PROJECT REFERENCE NO.	SHEET NO.
BP2.R001	2A–2

ROADWAY DESIGN ENGINEER

NORTH CAROLINA PROFESSIONAL SEAL 033871 ENGINEER DANIEL W. GARDNER, JR.

2023/03/13 08:29:42 PM EDT
DocuSign
Daniel W. Gardner, Jr.
4D9D7E4A1CEAED...

DOCUMENT NOT CONSIDERED FINAL UNLESS ALL SIGNATURES COMPLETED

TRANSYSTEMS
1 Glenwood Avenue
Raleigh, NC 27603
Tel:919.789.9977
Fax:919.789.9591
License: F-0453

PAVEMENT SCHEDULE

C1	1½″ TYPE S9.5B
C2	3″ TYPE S9.5B
C3	VAR. TYPE S9.5B
E1	5″ TYPE B25.0C
E2	VAR. TYPE B25.0C
R	SHOULDER BERM GUTTER.
T	EARTH MATERIAL.
U	EXISTING PAVEMENT
V	VAR. DEPTH MILLING
W	VAR. DEPTH WEDGING

3/13/2023
BP2.R001.1.Rdy_typ.dgn
USER:gardner

DocuSign Envelope ID: 553E9A58-79C8-4CC7-8814-99F935C0B242

PROJECT REFERENCE NO.	SHEET NO.
BP2.R001	2C-1

DOCUMENT NOT CONSIDERED FINAL UNLESS ALL SIGNATURES COMPLETED

STATE OF NORTH CAROLINA
DEPT. OF TRANSPORTATION
DIVISION OF HIGHWAYS
RALEIGH, N.C.

ROADWAY DETAIL DRAWING FOR
GUARDRAIL INSTALLATION

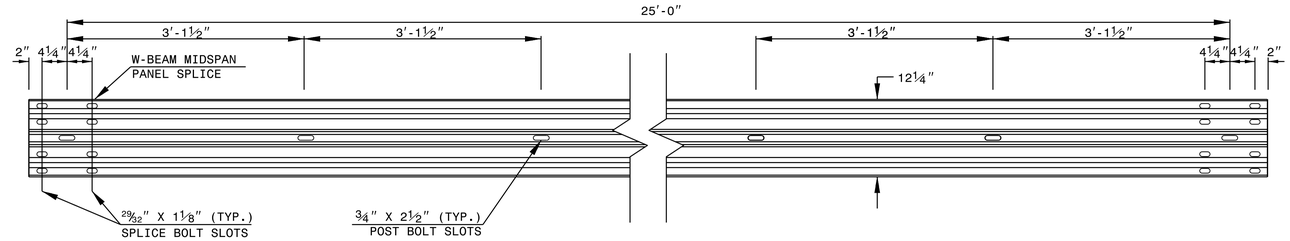

STANDARD W-BEAM GUARDRAIL

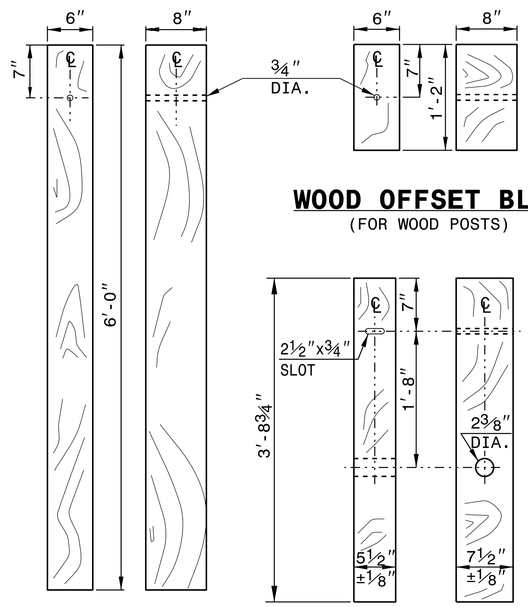

STANDARD LINE POST

WOOD OFFSET BLOCK
(FOR WOOD POSTS)

SHORT WOOD BREAKAWAY POST

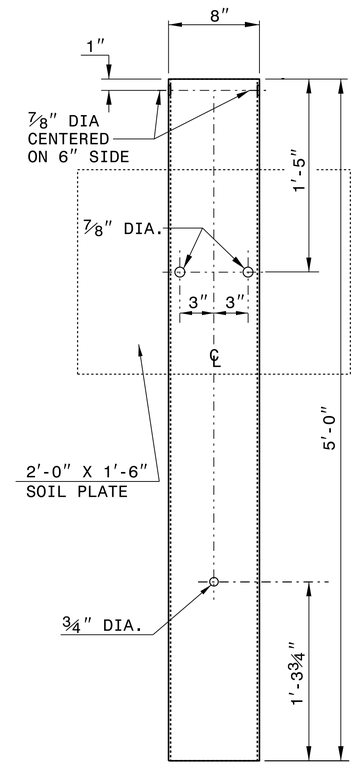

STEEL TUBE
TS 6"x8"x0.1875"

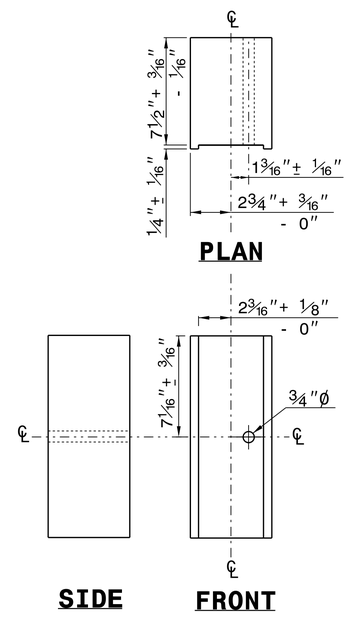

SIDE FRONT
ROUTED OFFSET BLOCK

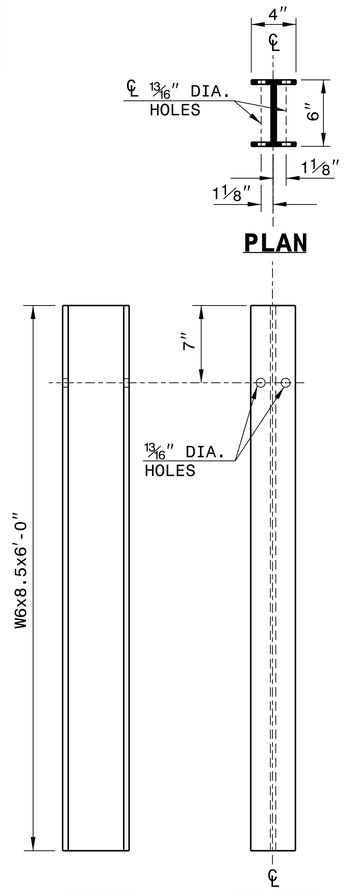

SIDE FRONT
"W6" STEEL POST

SYSTEM PARTS

SHEET 6 OF 8
862D02

STATE OF NORTH CAROLINA
DEPT. OF TRANSPORTATION
DIVISION OF HIGHWAYS
RALEIGH, N.C.

ROADWAY DETAIL DRAWING FOR
GUARDRAIL INSTALLATION

SHEET 6 OF 8
862D02

NORTH CAROLINA PROFESSIONAL SEAL 33144 ENGINEER NICOLE M. HUCKLER

DocuSigned by: Nicole M. Huckler
5884323034164C5...
2023.03.14

CONTRACTS STANDARDS AND DEVELOPMENT UNIT
Office 919-707-6950 FAX 919-250-4119

SEE TITLE BLOCK

ORIGINAL BY: J.HOWERTON DATE: 3-7-2018
MODIFIED BY: DATE:
CHECKED BY: DATE:
FILE SPEC.:

DocuSign Envelope ID: 553E9A58-79C9-4CC7-8814-99F93C08242

14-DEC-2017 10:36
S:\Contracts\Contracts\Special Details\jhowerton\Standard Drawings\2018 Standard Drawings\Details in Lieu of Standards\Division 8\0862d0301.dgn
jhowerton AT CSD-292595

STATE OF NORTH CAROLINA
DEPT. OF TRANSPORTATION
DIVISION OF HIGHWAYS
RALEIGH, N.C.

ROADWAY DETAIL DRAWING FOR
STRUCTURE ANCHOR UNITS
GUARDRAIL ANCHOR UNIT, TYPE III
FOR ATTACHMENT TO RAIL ON BRIDGE

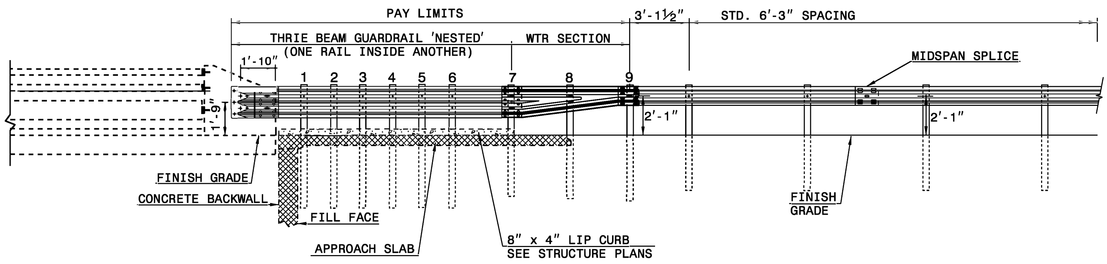

ELEVATION

NOTE:
**POST NOT REQUIRED FOR SKEW ANGLES GREATER THAN 150° OR LESS THAN 30° UNLESS OTHERWISE DIRECTED BY THE ENGINEER.
*THE DISTANCE FROM END OF BRIDGE RAIL TO CENTER LINE OF THE FIRST POST SHOULD BE 11½" IF CONCRETE BACKWALL IS NOT PRESENT.
-SHOULDER BERM GUTTER MUST BE INSTALLED TO THE LIMITS 8" x 4" LIP CURB IS SHOWN IF ANCHOR UNIT IS NOT ADJACENT TO AN APPROACH SLAB.
-MEASURE GUARDRAIL HEIGHT FROM THE TOP OF ADJACENT SURFACE (SHOULDER, BERM, OR GUTTER).
-LAP JOINTS IN THE DIRECTION OF TRAFFIC FLOW.
-SEE SHEET 3 FOR POST SECTIONS 1 THRU 9.

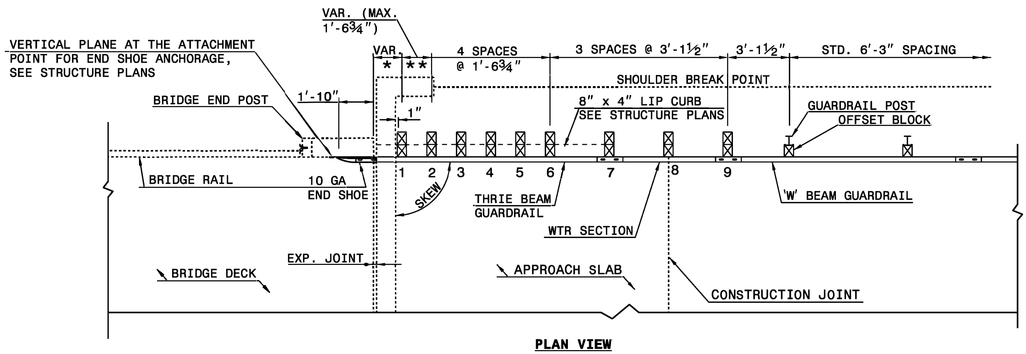

PLAN VIEW

GUARDRAIL ANCHOR UNIT, TYPE III FOR ATTACHMENT TO RAIL ON BRIDGE

SHEET 1 OF 7
862D03

STATE OF NORTH CAROLINA
DEPT. OF TRANSPORTATION
DIVISION OF HIGHWAYS
RALEIGH, N.C.

ROADWAY DETAIL DRAWING FOR
STRUCTURE ANCHOR UNITS
GUARDRAIL ANCHOR UNIT, TYPE III
FOR ATTACHMENT TO RAIL ON BRIDGE

SHEET 1 OF 7
862D03

STATE OF NORTH CAROLINA
DEPT. OF TRANSPORTATION
DIVISION OF HIGHWAYS
RALEIGH, N.C.

ROADWAY DETAIL DRAWING FOR
STRUCTURE ANCHOR UNITS
GUARDRAIL ANCHOR UNIT, TYPE III FOR ATTACHMENT TO RAIL ON BRIDGE - SUB REGIONAL TIER

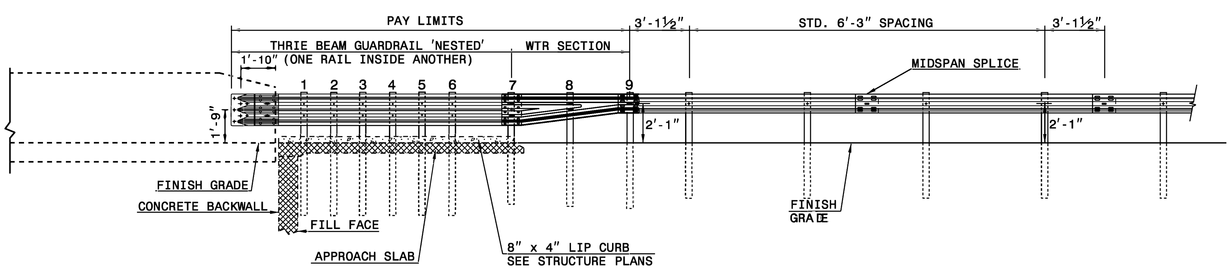

ELEVATION

NOTE:
**POST NOT REQUIRED FOR SKEW ANGLES GREATER THAN 150° OR LESS THAN 30° UNLESS OTHERWISE DIRECTED BY THE ENGINEER.
*THE DISTANCE FROM END OF BRIDGE RAIL TO CENTER LINE OF THE FIRST POST SHOULD BE 11½" IF CONCRETE BACKWALL IS NOT PRESENT.
-SHOULDER BERM GUTTER MUST BE INSTALLED TO THE LIMITS 8" x 4" LIP CURB IS SHOWN IF ANCHOR UNIT IS NOT ADJACENT TO AN APPROACH SLAB.
-MEASURE GUARDRAIL HEIGHT FROM THE TOP OF ADJACENT SURFACE (SHOULDER, BERM, OR GUTTER).
-LAP JOINTS IN THE DIRECTION OF TRAFFIC FLOW.
-SEE SHEET 3 FOR POST SECTIONS 1 THRU 9.

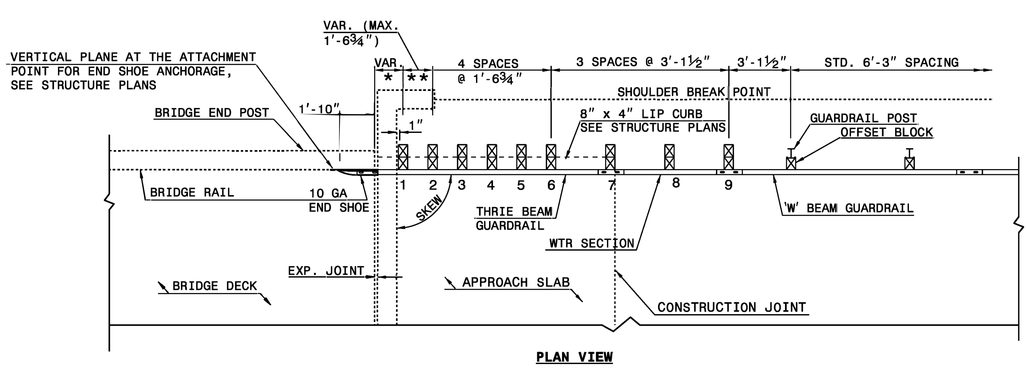

PLAN VIEW

GUARDRAIL ANCHOR UNIT, TYPE III FOR ATTACHMENT TO RAIL ON BRIDGE - SUB REGIONAL TIER

SHEET 2 OF 7
862D03

STATE OF NORTH CAROLINA
DEPT. OF TRANSPORTATION
DIVISION OF HIGHWAYS
RALEIGH, N.C.

ROADWAY DETAIL DRAWING FOR
STRUCTURE ANCHOR UNITS
GUARDRAIL ANCHOR UNIT, TYPE III FOR ATTACHMENT TO RAIL ON BRIDGE - SUB REGIONAL TIER

SHEET 2 OF 7
862D03

ORIGINAL BY: J. HOWERTON
MODIFIED BY:
CHECKED BY:
FILE SPEC.:
DATE: 06-22-12
DATE:
DATE:

SEE TITLE BLOCK

CONTRACT STANDARDS AND DEVELOPMENT UNIT
Office 919-707-6950 FAX 919-250-4119

DOCUMENT NOT CONSIDERED FINAL UNLESS ALL SIGNATURES COMPLETED

NORTH CAROLINA PROFESSIONAL SEAL 33144 ENGINEER NICHOLAS H. HAKKI

DocuSigned by:
Nicholas H. Hakki
5B8A32D2341462...
2023.03.14

PROJECT REFERENCE NO.: BP2.R001
SHEET NO.: 2C-2

DocuSign Envelope ID: 553E9A58-79C8-4CC7-8814-99F935C0B242

PROJECT REFERENCE NO.	SHEET NO.
BP2.R001	2C-3

STATE OF
NORTH CAROLINA
DEPT. OF TRANSPORTATION
DIVISION OF HIGHWAYS
RALEIGH, N.C.

ROADWAY DETAIL DRAWING FOR

ROCK PLATING

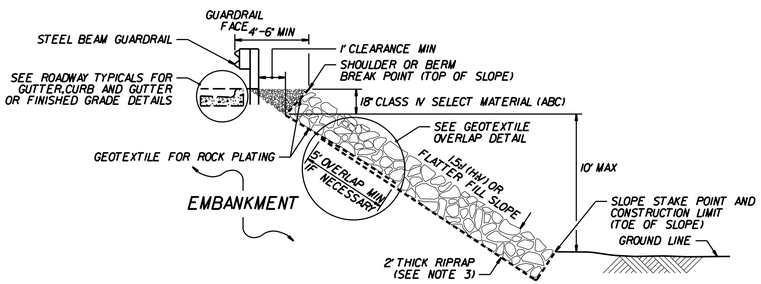

ROCK PLATING DETAIL NO. 1 – TYPICAL SECTION

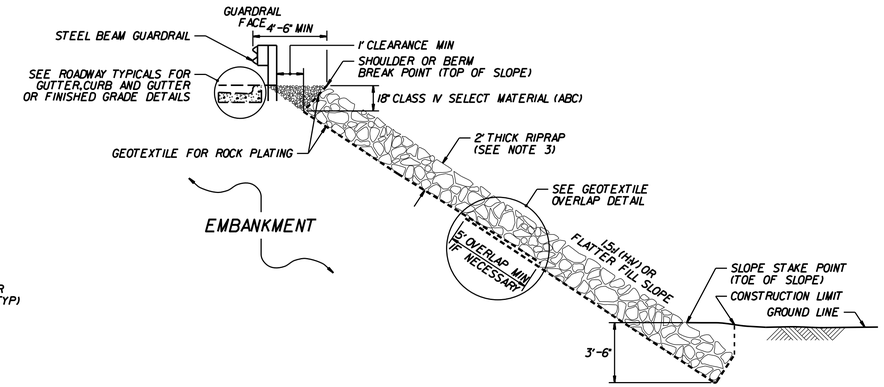

ROCK PLATING DETAIL NO. 2 – TYPICAL SECTION

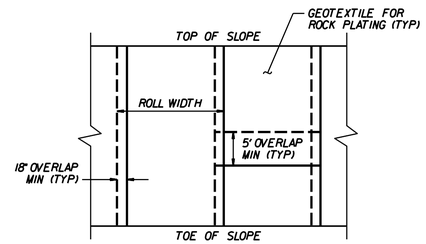

GEOTEXTILE OVERLAP DETAIL
(PLAN VIEW)

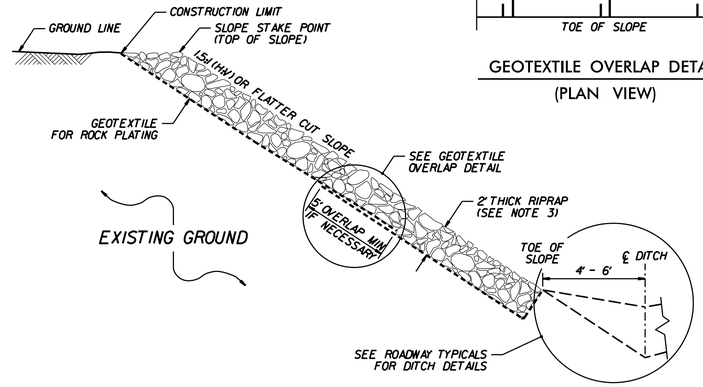

ROCK PLATING DETAIL NO. 3 – TYPICAL SECTION

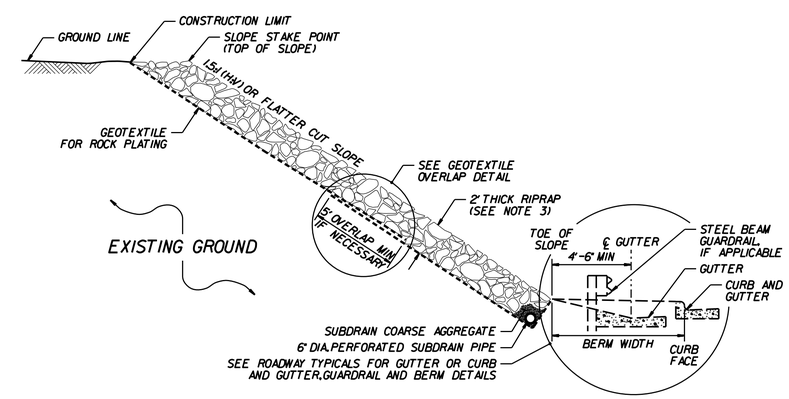

ROCK PLATING DETAIL NO. 4 – TYPICAL SECTION

NOTES:

1. SEE ROADWAY PLANS AND SUMMARY SHEETS FOR ROCK PLATING LOCATIONS.
2. FOR ROCK PLATING,SEE SECTION 275 OF THE STANDARD SPECIFICATIONS.
3. USE CLASS I,2 OR B RIPRAP UNLESS REQUIRED OTHERWISE IN THE ROADWAY SUMMARY SHEETS.

SHEET 1 OF 1
275D01

STATE OF
NORTH CAROLINA
DEPT. OF TRANSPORTATION
DIVISION OF HIGHWAYS
RALEIGH, N.C.

ROADWAY DETAIL DRAWING FOR

ROCK PLATING

SHEET 1 OF 1
275D01

$$$$$$SYSTIME$$$$$
$$$$$$$$$$$$$$$$DGN$$$$$$$$$$$$$$$$$$$$
$$$$$$USERNAME$$$$

NORTH CAROLINA PROFESSIONAL SEAL 33144 ENGINEER NICOLE M. HUCKLER

DocuSigned by:
Nicole M. Huckler
5884323D341664C5...
2023.03.14

CONTRACT STANDARDS
AND DEVELOPMENT UNIT
Office 919-707-6900 FAX 919-250-4119

SEE TITLE BLOCK

ORIGINAL BY: S. HIDDEN DATE: 03-11-22
MODIFIED BY: DATE:
CHECKED BY: DATE:
FILE SPEC.:

COMPUTED BY: HLMB DATE: 12/2/2021
CHECKED BY: DWG DATE: 10/6/2022

PROJECT REFERENCE NO.	SHEET NO.
BP2.R001	3B-1

TRANSYSTEMS
1 Glenwood Avenue
Raleigh, NC 27603
Tel:919.789.9977
Fax:919.789.9591
License: F-0453

STATE OF NORTH CAROLINA
DIVISION OF HIGHWAYS

SUMMARY OF EARTHWORK

IN CUBIC YARDS

STATION	STATION	UNCL. EXCAV.	EMBANK. +%	BORROW	WASTE
SUMMARY NO. 1					
–L– STA. 18+25.00	–L– STA. 20+09.81 (BB)	17	112	95	0
TOTAL SUMMARY NO. 1		17	112	95	0
SUMMARY NO. 2					
–L– STA. 21+12.19 (EB)	–L– STA. 24+50.00	15	300	285	0
–Y– STA. 10+10.15	–Y– STA. 10+75.00	20	5		15
TOTAL SUMMARY NO. 2		35	305	285	15
SUMMARY TOTALS		52	417	380	15
WASTE IN LIEU OF BORROW				–15	–15
PROJECT TOTALS		52	417	365	0
EST. 5% TO REPLACE TOP SOIL ON BORROW PIT				18	
GRAND TOTALS		52	417	383	0
SAY		60		425	

UNDERCUT = 300 CY
SELECT GRANULAR MATERIAL = 300 CY
GEOTEXTILE FOR SOIL STABILIZATION = 300 SY

Earthwork quantities are calculated by TRANSYSTEMS.
These earthwork quantities are based in part on subsurface data provided by the NCDOT engineering group.

Note: Approximate quantities only. Unclassified Excavation, Borrow Excavation, Fine Grading, Clearing and Grubbing, Removal of Existing Pavement will be paid for at the contract lump sum price for "Grading."

"N" = DISTANCE FROM EDGE OF LANE TO FACE OF GUARDRAIL.
TOTAL SHOULDER WIDTH = DISTANCE FROM EDGE OF TRAVEL LANE TO SHOULDER BREAK POINT.
FLARE LENGTH = DISTANCE FROM LAST SECTION OF PARALLEL GUARDRAIL TO END OF GUARDRAIL.
W = TOTAL WIDTH OF FLARE FROM BEGINNING OF TAPER TO END OF GUARDRAIL.
G = GATING IMPACT ATTENUATOR TYPE 350
NG = NON–GATING IMPACT ATTENUATOR TYPE 350

GUARDRAIL SUMMARY

SURVEY LINE	BEG. STA.	END STA.	LOCATION	LENGTH			WARRANT POINT		"N" DIST. FROM E.O.L.	TOTAL SHOUL. WIDTH	FLARE LENGTH		W		ANCHORS								IMPACT ATTENUATOR TYPE 350			SINGLE FACED GUARDRAIL	REMOVE EXISTING GUARDRAIL	REMOVE AND STOCKPILE EXISTING GUARDRAIL	REMARKS
				STRAIGHT	SHOP CURVED	DOUBLE FACED	APPROACH END	TRAILING END			APPROACH END	TRAILING END	APPROACH END	TRAILING END	GREU TL–3	TYPE–III							EA	G	NG				
–L–	19+34.81	20+09.81	LT	75.00′				20+11.00	3.75′	7′		50′		1′	1	1													
–L–	21+12.19	21+87.19	LT	75.00′			21+11.00		3.75	7′	50′		1′		1	1													
–L–	19+34.81	20+09.81	RT	75.00′			20+11.00		3.75′	7′	50′		1′		1	1													
–L–	21+12.19	21+87.19	RT	75.00′				21+11.00	3.75′	7′		50′		1′	1	1													
			SUBTOTAL	300.00′											4	4													
		LESS ANCHOR DEDUCTION																											
		GREU TL–3, 4 @ 50′=		200.00′																									
		TYPE–III, 4 @ 18.75′=		75.00′																									
			TOTAL	25.00′											4	4													
ADDITIONAL GUARDRAIL POSTS = 5 EACH			SAY	50.00′											4	4													

ASPHALT PAVEMENT REMOVAL SUMMARY

SURVEY LINE	STATION	STATION	LOCATION LT/RT/CL	SQUARE YARDS
–L–	19+61.00	20+16.05	LT./RT.	113.61
–L–	21+07.18	21+61.00	LT./RT.	109.14
			TOTALS	222.75
			SAY	230.00

SHOULDER BERM GUTTER SUMMARY

SURVEY LINE	STATION	STATION	LENGTH
–L– LT.	19+88.34	19+98.94	10.60
–L– RT.	19+88.34	19+98.94	10.60
		TOTALS	21.20
		SAY	25.00

8/17/99
3/13/2023
BP2.R001_Rdy_sum_3B-1.dgn
USER:hlmb
PLANSHEET

COMPUTED BY: DWG DATE: 3/8/2022
CHECKED BY: BM DATE: 12/8/2022

PROJECT REFERENCE NO.	SHEET NO.
BP2.R001	3D-1

STATE OF NORTH CAROLINA
DIVISION OF HIGHWAYS

NOTE: Invert Elevations are for Bid Purposes only and shall not be used for project construction stakeout. See "Standard Specifications For Roads and Structures, Section 300–5".

SUB–REGIONAL & REGIONAL
LIST OF PIPES, ENDWALLS, ETC. (FOR PIPES 48" & UNDER)

| STATION / SIZE / THICKNESS OR GAUGE | LOCATION (LT,RT, OR CL) | STRUCTURE NO. FROM. | STRUCTURE NO. TO | TOP ELEVATION | INVERT ELEVATION | INVERT ELEVATION | SLOPE CRITICAL | DRAINAGE PIPE (RCP, CSP, CAAP, HDPE, or PVC) 12" | 15" | 18" | 24" | 30" | 36" | 42" | 48" | DO NOT USE RCP | DO NOT USE CSP | DO NOT USE CAAP | DO NOT USE HDPE | C.S. PIPE 12" | 15" | 18" | 24" | 36" | 42" | 48" | R.C. PIPE (CLASS III) 15" | 18" | 24" | 30" | 36" | 42" | 48" | R.C. PIPE (CLASS IV) 12" | 15" | 18" | 24" | 30" | 36" | 42" | 48" | | | | 15" SIDE DRAIN PIPE | 18" SIDE DRAIN PIPE | ENDWALLS STD. 838.01, STD. 838.11 OR STD. 838.80 (UNLESS NOTED OTHERWISE) CU. YDS. R.C.P. | C.S.P. | QUANTITIES FOR DRAINAGE STRUCTURES * TOTAL L.F. FOR PAY QUANTITY SHALL BE COL. "A" + (1.3 X COL. B') PER EACH (0' THRU 5.0') | LIN. *FT. A 5.0' THRU 10.0' | B 10.0' AND ABOVE | C.B. STD. 840.01 OR STD. 840.02 | FRAME, GRATES AND HOOD STANDARD 840.03 TYPE OF GRATE E | F | G | | CONCRETE TRANSITIONAL SECTION CATCH BASIN | DROP INLET | T.B.D.I. STD. 840.35 | G.D.I. (N.S. FLAT) FRAME WITH TWO GRATES STD. 840.29 | | | | | | | 15" DRAINAGE PIPE ELBOWS, NO. | PIPE REMOVAL LIN.FT. | REMARKS |
|---|---|---

COMPUTED BY: Tyler Bottoms DATE: 3/10/2022
CHECKED BY: Jinyoung Park DATE: 4/21/2022

TRANSYSTEMS
1 Glenwood Avenue
Raleigh, NC 27603
Tel:919.789.9977
Fax:919.789.9591
License: F-0453

PROJECT REFERENCE NO.	SHEET NO.
BP2.R001	3G–1

STATE OF NORTH CAROLINA
DIVISION OF HIGHWAYS

SUMMARY OF QUANTITIES

SUMMARY OF SUBSURFACE DRAINAGE

LINE	STATION	STATION	LOCATION LT/RT/CL	DRAIN TYPE* UD/BD/SD	LF
	CONTINGENCY			SD	200
				TOTAL LF:	200

*UD = UNDERDRAIN
*BD = BLIND DRAIN
*SD = SUBSURFACE DRAIN

SUMMARY OF ROCK PLATING

LINE	Beginning Slope (H:V)	Approx. Station	Ending Slope (H:V)	Approx. Station	Location LT/RT	Rock Plating Detail No. 1/2/3/4	Riprap Class* 1/2/B	Rock Plating SY
–L–	2:1	19+50+/–	2:1	20+01+/–	LT	1		70
–L–	2:1	19+50+/–	2:1	20+01+/–	RT	1		50
–L–	2:1	21+21+/–	2:1	23+00+/–	LT	1		320
–L–	2:1	21+21+/–	2:1	22+50+/–	RT	1		165
							TOTAL SY:	605

*Use Class 1, 2, or B riprap if riprap class is not shown for rock plating location.

8/17/99
3/13/2023
...\BP2R001_Rdy_sum_3G-1.dgn
USER:Rdgonder

DocuSign Envelope ID: 05DC3F60-E828-43B7-A744-8FEA1EE577CE

-L-	-Y-	
PI Sta 12+35.05	PI Sta 12+24.16	PI Sta 16+27.37
Δ = 23° 11' 00.0" (LT)	Δ = 25° 02' 30.5" (LT)	Δ = 27° 46' 55.1" (LT)
D = 4° 59' 59.9"	D = 7° 13' 30.4"	D = 8° 11' 21.1"
L = 463.67'	L = 346.59'	L = 339.25'
T = 235.05'	T = 176.11'	T = 173.03'
R = 1,145.92'	R = 793.01'	R = 699.65'
	S.E. = SEE PLANS	

DETAIL 1
ROCK PLATING
(Not to Scale)

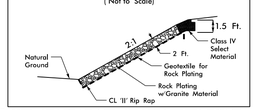

FROM STA. 19+50 TO STA. 20+03 -L- LT AND RT
FROM STA. 21+18 TO STA. 22+50 -L- LT AND RT

TRANSYSTEMS
1 Glenwood Avenue
Raleigh, NC 27603
Tel:919.789.9977
Fax:919.789.9591
License: F-0453

PROJECT REFERENCE NO.	SHEET NO.
BP2.R001	4

ROADWAY DESIGN ENGINEER
NORTH CAROLINA PROFESSIONAL SEAL 033871 ENGINEER DANIEL W. GARDNER, JR.
2023.03.16 DocuSigned by: Daniel W. Gardner, Jr.

HYDRAULICS ENGINEER
NORTH CAROLINA PROFESSIONAL SEAL 33719 ENGINEER BRIAN A. MAZZOCHI
2023.03.16 DocuSigned by: Brian A. Mazzochi

DOCUMENT NOT CONSIDERED FINAL UNLESS ALL SIGNATURES COMPLETED

NAD 83/NA 2011

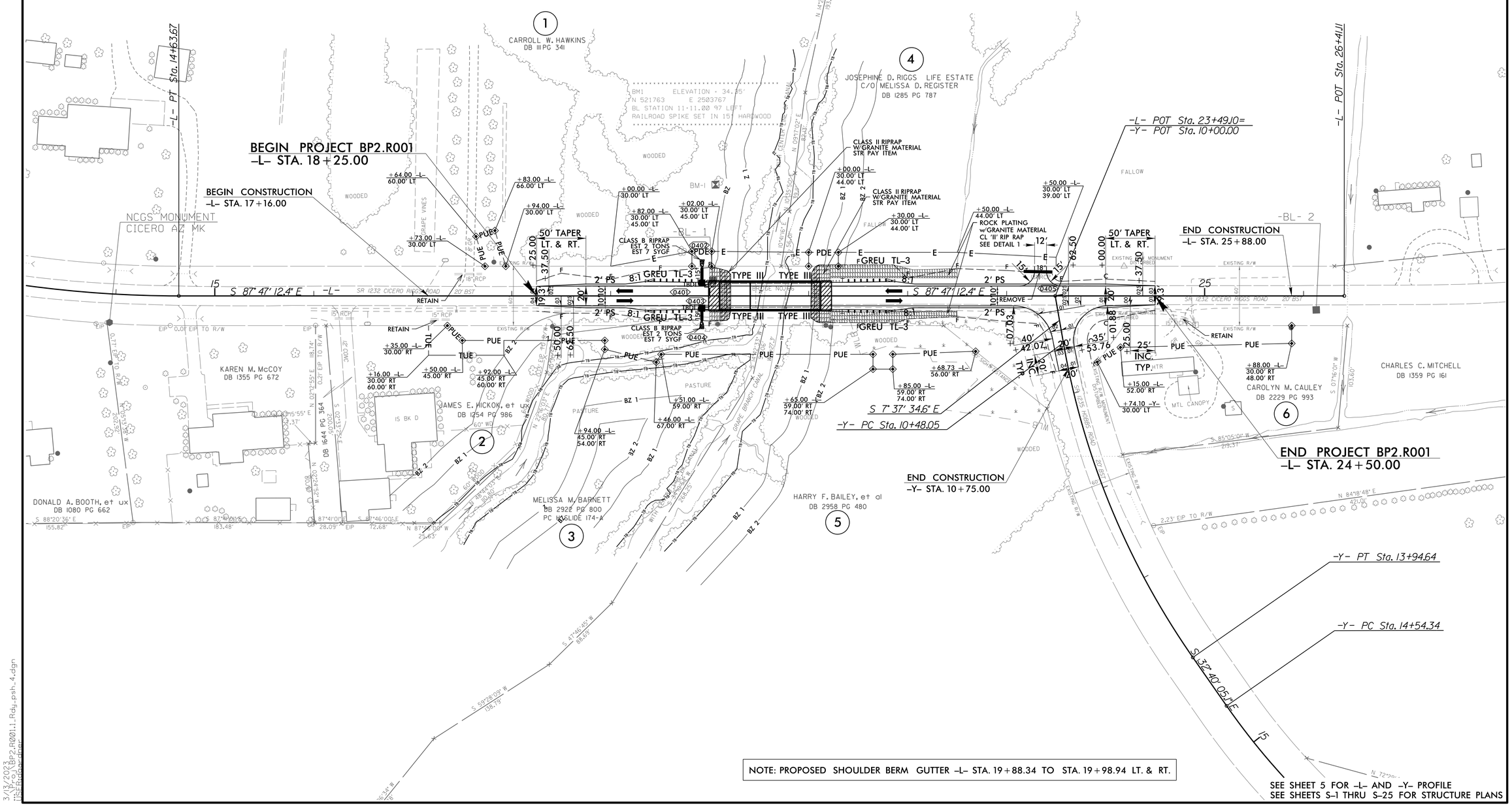

NOTE: PROPOSED SHOULDER BERM GUTTER -L- STA. 19+88.34 TO STA. 19+98.94 LT. & RT.

6/2/99

3/13/2023
BP2.R001.1.Rdy.psh.4.dgn
USER:RDAY dgn

DocuSign Envelope ID: 05DC3F60-E828-43B7-A744-8FEA1EE577CE

5/28/99

PROJECT REFERENCE NO.	SHEET NO.
BP2.R001	5

ROADWAY DESIGN ENGINEER
NORTH CAROLINA PROFESSIONAL SEAL 033871 ENGINEER DANIEL W. GARDNER, JR.
2023.04.19
DocuSigned by: Daniel W. Gardner, Jr.
4396D7E4A1CE4ED...

HYDRAULICS ENGINEER
NORTH CAROLINA PROFESSIONAL SEAL 33719 ENGINEER BRIAN R. MAZZOCHI
2023.04.19
DocuSigned by: Brian R. Mazzochi
1FE52A9BC0487...

DOCUMENT NOT CONSIDERED FINAL UNLESS ALL SIGNATURES COMPLETED

TRANSYSTEMS
1 Glenwood Avenue
Raleigh, NC 27603
Tel:919.789.9977
Fax:919.789.9591
License: F-0453

BRIDGE HYDRAULIC DATA

DESIGN DISCHARGE	= 660	CFS
DESIGN FREQUENCY	= 25	YRS
DESIGN HW ELEVATION	= 34.3	FT
BASE DISCHARGE	= 1000	CFS
BASE FREQUENCY	= 100	YRS
BASE HW ELEVATION	= 35.1	FT
OVERTOPPING DISCHARGE	= 2150	CFS
OVERTOPPING FREQUENCY	= >500	YRS
OVERTOPPING ELEVATION	= 37.8	FT
	=	FT
DATE OF SURVEY	= 11/2021	
W.S. ELEVATION AT DATE OF SURVEY	= 28.4	FT

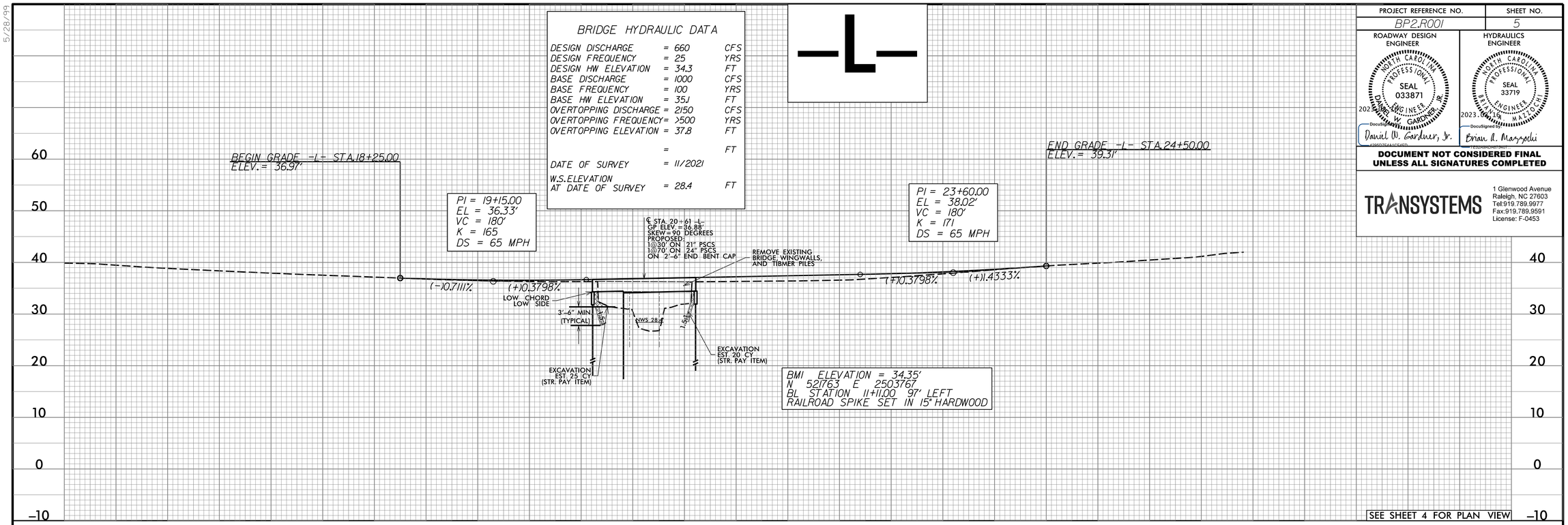

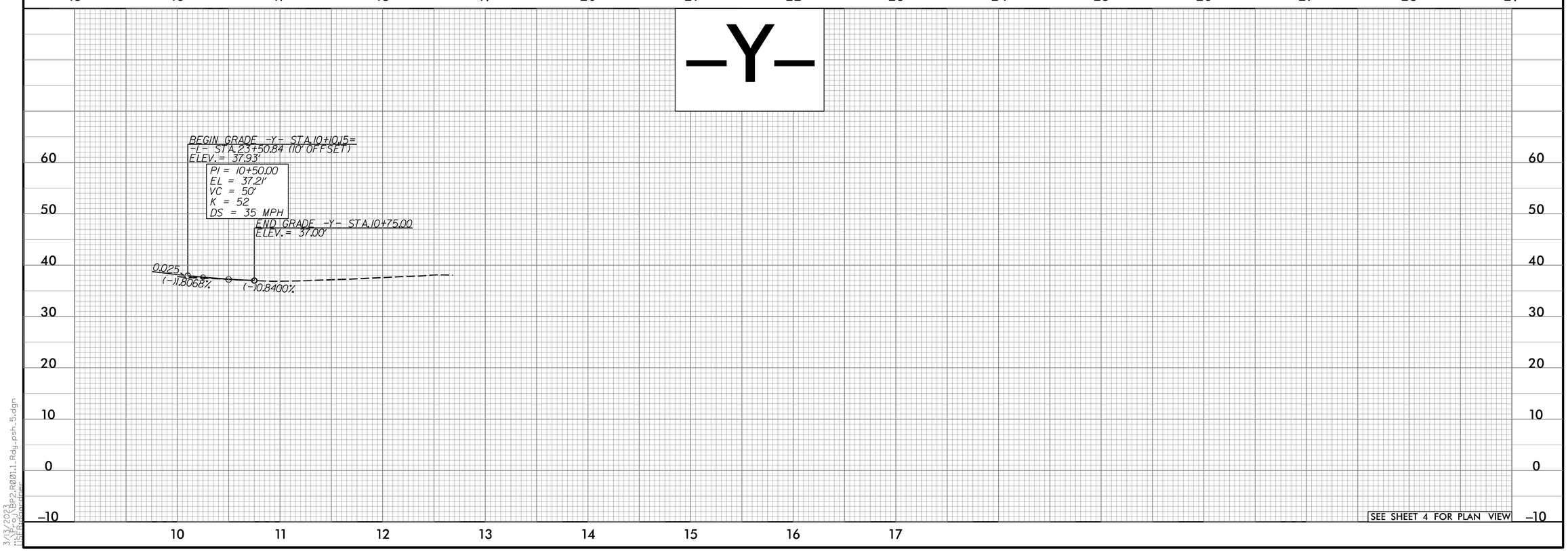

3/13/2023
1:50 PM
BP2.R001_Rdy_psh_5.dgn
USER:bgardner

DocuSign Envelope ID: B0731B8E-9244-450A-A208-38BBE3793455

09/08/99

TIP PROJECT: BP2.R001

STATE	STATE PROJECT REFERENCE NO.	SHEET NO.	TOTAL SHEETS
N.C.	BP2.R001	RW01	04

STATE OF NORTH CAROLINA
DIVISION OF HIGHWAYS

SURVEY CONTROL, EXISTING CENTERLINES, RIGHT OF WAY, EASEMENTS AND PROPERTY TIES

CRAVEN COUNTY

N
NC GRID
NAD 83 NA 2011

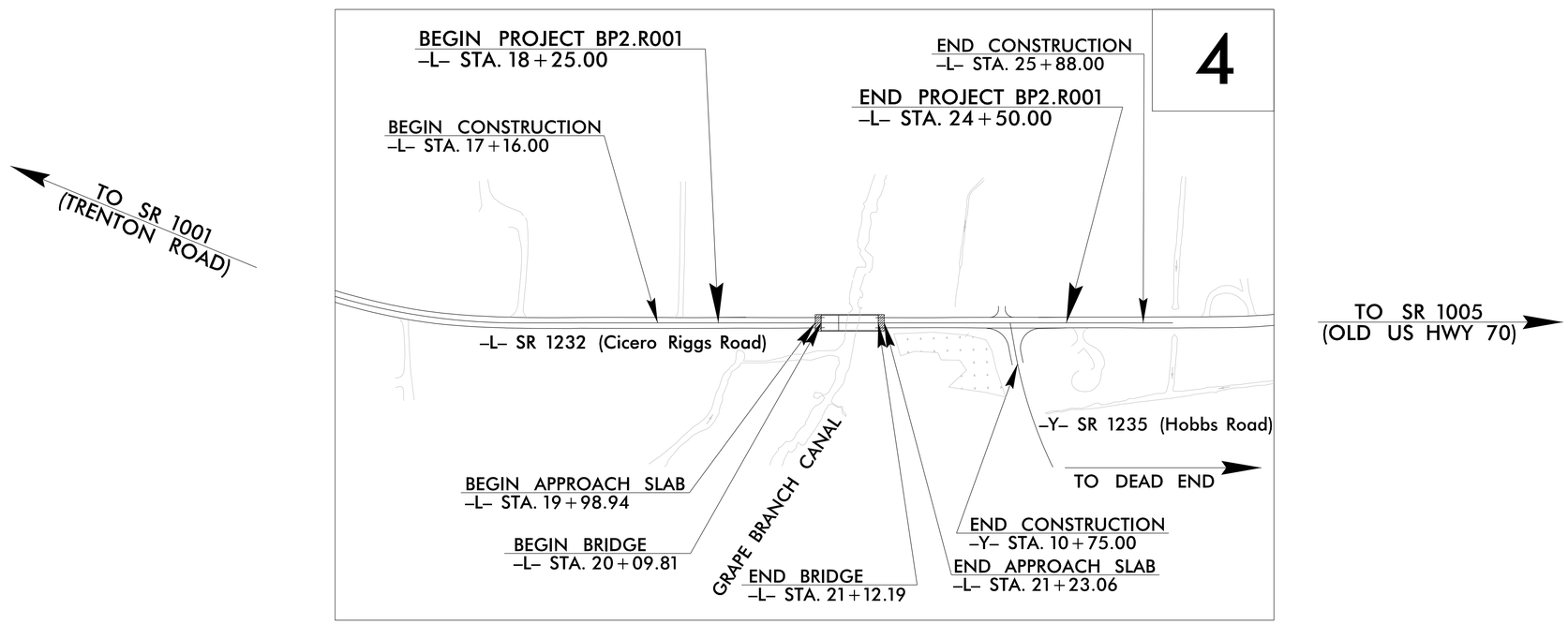

NOT TO SCALE

DOCUMENT NOT CONSIDERED FINAL UNLESS ALL SIGNATURES COMPLETED

GRAPHIC SCALE

NOT TO SCALE

DATUM DESCRIPTION

THE LOCALIZED COORDINATE SYSTEM DEVELOPED FOR THIS PROJECT
IS BASED ON THE STATE PLANE COORDINATES ESTABLISHED BY
NCGS FOR MONUMENT "P-4"
WITH NAD 83/NSRS 2011 STATE PLANE GRID COORDINATES OF
NORTHING: 521641.747(ft) EASTING: 2503488.717(ft)
ELEVATION: 36.618(ft)
THE AVERAGE COMBINED GRID FACTOR USED ON THIS PROJECT
(GROUND TO GRID) IS: 0.99987731
THE N.C. LAMBERT GRID BEARING AND
LOCALIZED HORIZONTAL GROUND DISTANCE FROM
"P-4" TO -L- STATION 18+25.00 IS
N 36°55'46.7" W 25.52(ft)
ALL LINEAR DIMENSIONS ARE LOCALIZED HORIZONTAL DISTANCES
VERTICAL DATUM USED IS NAVD 88, GEOID 12(CONUS)

Prepared in the Office of:

ESP
LICENSE NO. F-1407

2200 GATEWAY CENTRE BLVD., SUITE 216
MORRISVILLE, NC 27560
LICENSE NO. F-1407

2018 STANDARD SPECIFICATIONS

RIGHT OF WAY DATE:	*LETTING DATE:*
07/20/2022	*03/22/2023*

PROFESSIONAL LAND SURVEYOR

NORTH CAROLINA PROFESSIONAL SEAL L-3866 LAND SURVEYOR TOYNIA E.S. GIBBS

NORTH CAROLINA LICENSE NO. F-1407 ESP ASSOCIATES, INC.

Toynia Gibbs
2E2F55AA0EC84DA...

2/3/2023

SIGNATURE: *Date:*

STATE OF NORTH CAROLINA • DEPARTMENT OF TRANSPORTATION •

$$$$SYSTIME$$$$
$$$$USERNAME$$$$EDGN$$$$

DocuSign Envelope ID: B0731B8E-9244-450A-A208-38BBE3793455

6/2/99

REVISIONS

PROPOSED ALIGNMENT CONTROL SHEET

PROJECT REFERENCE NO.	SHEET NO.
BP2R001	RW02D-1

Location and Surveys

ESP
LICENSE NO. F-1407
2200 GATEWAY CENTRE BLVD, SUITE 216
MORRISVILLE, NC 27560
LICENSE NO. F-1407

PROJECT SURVEYOR

NORTH CAROLINA PROFESSIONAL SEAL L-3866 LAND SURVEYOR TOYNIA E.S. GIBBS
NORTH CAROLINA LICENSE NO. F-1407 GIBBS ASSOCIATES, INC.

2/3/2023
DocuSigned by:
Toynia Gibbs
2E2F55AA0EC84DA...

DOCUMENT NOT CONSIDERED FINAL UNLESS ALL SIGNATURES COMPLETED

I, Toynia E.S. Gibbs, PLS, certify that the data compiled came from available surveys/mapping performed by others and provided to me by NCDOT and do not certify to the accuracy or quality of the individual data sources.

Witness my original signature and seal this day 2/3/2023.

DocuSigned by:
Toynia Gibbs
2E2F55AA0EC84DA...
Professional Land Surveyor L-3866

NORTH CAROLINA PROFESSIONAL SEAL L-3866 LAND SURVEYOR TOYNIA E.S. GIBBS
2/3/2023
DocuSigned by:
Toynia Gibbs
2E2F55AA0EC84DA...

L

TYPE	STATION	NORTH	EAST
PC	10+00.00	521781.7742	2502774.0332
PT	14+63.67	521671.8886	2503221.2427
POT	26+41.11	521626.4178	2504397.8015

Y

TYPE	STATION	NORTH	EAST
POT	10+00.00	521637.6945	2504106.0165
PC	10+48.05	521590.0691	2504112.3933
PT	13+94.64	521267.2661	2504230.8239
PC	14+54.34	521217.0173	2504263.0436
PT	17+93.59	520986.0246	2504506.9623
POT	19+22.54	520922.4283	2504619.1401

NOTES:

1. PROJECT CONTROL WAS ESTABLISHED USING GNSS, THE GLOBAL NAVIGATION SATELLITE SYSTEM.

2. THE PROPOSED ALIGNMENT CONTROL DATA FOR THIS PROJECT HAS BEEN COMPILED FROM VARIOUS SOURCES. IF FURTHER INFORMATION REGARDING PROJECT CONTROL IS NEEDED, PLEASE CONTACT THE LOCATION AND SURVEYS UNIT.

$$$$SYSTIME$$$$
$$$$USERNAME$$$$DGN$$$$$$$$$$$$$$$$

DocuSign Envelope ID: B0731B8E-9244-450A-A208-38BBE3793455

6/2/99

REVISIONS

RIGHT OF WAY CONTROL SHEET

PROJECT REFERENCE NO.	SHEET NO.
BP2R001	RW03E-2

Location and Surveys

ESP
LICENSE NO. F-1407
2200 GATEWAY CENTRE BLVD., SUITE 216
MORRISVILLE, NC 27560
LICENSE NO. F-1407

PROJECT SURVEYOR

NORTH CAROLINA PROFESSIONAL SEAL L-3866 LAND SURVEYOR TOYNIA E.S. GIBBS
2/3/2023
DocuSigned by: Toynia Gibbs 2E2F55AA0EC84DA...

NORTH CAROLINA LICENSE NO. F-1407 ESP ASSOCIATES, INC.

DOCUMENT NOT CONSIDERED FINAL UNLESS ALL SIGNATURES COMPLETED

PERMANENT EASEMENT MARKER IRON PIN AND CAP-E

ALIGN	STATION	OFFSET	NORTH	EAST
L	17+35.00	30.00	521631.4325	2503491.2133
L	17+50.00	45.00	521615.8645	2503505.6229
L	17+64.00	-60.00	521720.2455	2503523.6673
L	17+73.00	-30.00	521689.9203	2503531.5021
L	17+83.00	-66.00	521725.5073	2503542.8849
L	17+94.00	-30.00	521689.1093	2503552.4864
L	18+94.00	45.00	521610.3034	2503649.5154
L	18+94.00	54.00	521601.3101	2503649.1679
L	19+46.00	67.00	521586.3117	2503700.6270
L	19+51.00	59.00	521594.1126	2503705.9323
L	19+82.00	-30.00	521681.8490	2503740.3462
L	19+82.00	-45.00	521696.8379	2503740.9255
L	20+02.00	-45.00	521696.0655	2503760.9105
L	20+02.00	-30.00	521681.0767	2503760.3313
L	21+00.00	-30.00	521677.2921	2503858.2582
L	21+00.00	-44.00	521691.2816	2503858.7988
L	21+30.00	-44.00	521690.1231	2503888.7764
L	21+30.00	-30.00	521676.1335	2503888.2358
L	21+65.00	59.00	521585.8483	2503919.7726
L	21+65.00	74.00	521570.8595	2503919.1933
L	21+85.00	59.00	521585.0759	2503939.7577
L	21+85.00	74.00	521570.0871	2503939.1784
L	22+68.73	56.00	521584.8403	2504023.5380
L	24+15.00	52.00	521583.1884	2504169.8565
L	25+88.00	30.00	521598.4910	2504343.5770
L	25+88.00	48.00	521580.5045	2504342.8819

PERMANENT EASEMENT MARKER IRON PIN AND CAP-E

ALIGN	STATION	OFFSET	NORTH	EAST
Y	10+74.10	-30.00	521569.2671	2504145.8616

I , Toynia E.S. Gibbs, PLS, certify that the right of way and permanent easement monumentation for this project shown herein was completed under my direct and responsible charge from an actual survey made under my supervision; that all horizontal closures had a minimum ratio of precision of 1:10,000 (Class A). Field work was performed in January 2023, and all coordinates are based on NAD83/2011; That this survey was performed to meet the requirements of 21NCAC 56.1600 as applicable.

Witness my original signature and seal this day 2/3/2023.

DocuSigned by: Toynia Gibbs 2E2F55AA0EC84DA...
Professional Land Surveyor L-3866

NORTH CAROLINA PROFESSIONAL SEAL L-3866 LAND SURVEYOR TOYNIA E.S. GIBBS
2/3/2023
DocuSigned by: Toynia Gibbs 2E2F55AA0EC84DA...

NOTES:

1. IF FURTHER INFORMATION REGARDING PROJECT CONTROL IS NEEDED PLEASE CONTACT THE LOCATION AND SURVEYS UNIT.
2. PROJECT CONTROL WAS ESTABLISHED USING GNSS, THE GLOBAL NAVIGATION SATELLITE SYSTEM.
3. RIGHT OF WAY MONUMENTATION ESTABLISHED JUNE 2022 TO JULY 2022 .

$$$$SYSTIME$$$$
$$$$TIME$$$$
$$$$USERNAME$$$$ON$$$$$$$$$$$$$$$$

DocuSign Envelope ID: 235B76E2-628F-4A71-A8AC-CA4665543EE9

PROJECT REFERENCE NO.	SHEET NO.
BP2R001	RW04

Location and Surveys

ESP
LICENSE NO. F-1407
2200 GATEWAY CENTRE BLVD., SUITE 236
MORRISVILLE, NC 27560
LICENSE NO. F-1407

PROJECT SURVEYOR

NORTH CAROLINA PROFESSIONAL SEAL L-3866 LAND SURVEYOR TOYNIA E. S. GIBBS

NORTH CAROLINA LICENSE NO. F-1407 ESP ASSOCIATES, INC.

2/3/2023
DocuSigned by:
Toynia Gibbs
2E2F55AA0EC84DA...

DOCUMENT NOT CONSIDERED FINAL UNLESS ALL SIGNATURES COMPLETED

I , Toynia E.S. Gibbs, PLS, certify that the right of way and permanent easement monumentation for this project shown herein was completed under my direct and responsible charge from an actual survey made under my supervision; that all horizontal closures had a minimum ratio of precision of 1:10,000 (Class A). Field work was performed in January 2023, and all coordinates are based on NAD83/2011; That this survey was performed to meet the requirements of 21NCAC 56.1600 as applicable.

Witness my original signature and seal this day 2/3/2023.

DocuSigned by:
Toynia Gibbs
2E2F55AA0EC84DA...

Professional Land Surveyor L-3866

NORTH CAROLINA PROFESSIONAL SEAL L-3866 LAND SURVEYOR TOYNIA E. S. GIBBS

2/3/2023
DocuSigned by:
Toynia Gibbs
2E2F55AA0EC84DA...

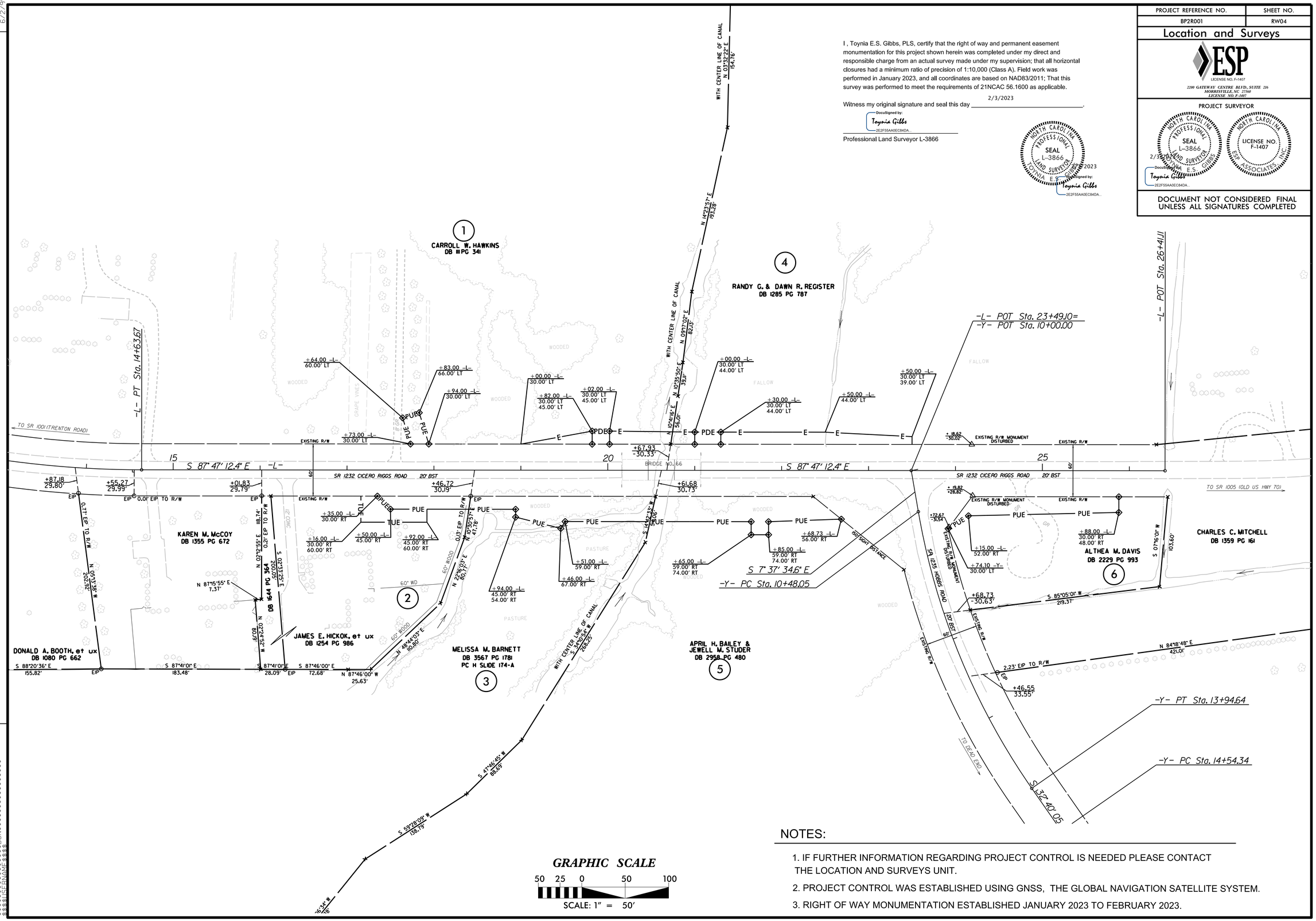

NOTES:

1. IF FURTHER INFORMATION REGARDING PROJECT CONTROL IS NEEDED PLEASE CONTACT THE LOCATION AND SURVEYS UNIT.
2. PROJECT CONTROL WAS ESTABLISHED USING GNSS, THE GLOBAL NAVIGATION SATELLITE SYSTEM.
3. RIGHT OF WAY MONUMENTATION ESTABLISHED JANUARY 2023 TO FEBRUARY 2023.

REVISIONS

6/2/99

DocuSign Envelope ID: 88F0DFB3-BCD9-41B2-BA46-D6271A63AC43

STATE OF NORTH CAROLINA
DIVISION OF HIGHWAYS

TRANSPORTATION MANAGEMENT PLAN

CRAVEN COUNTY

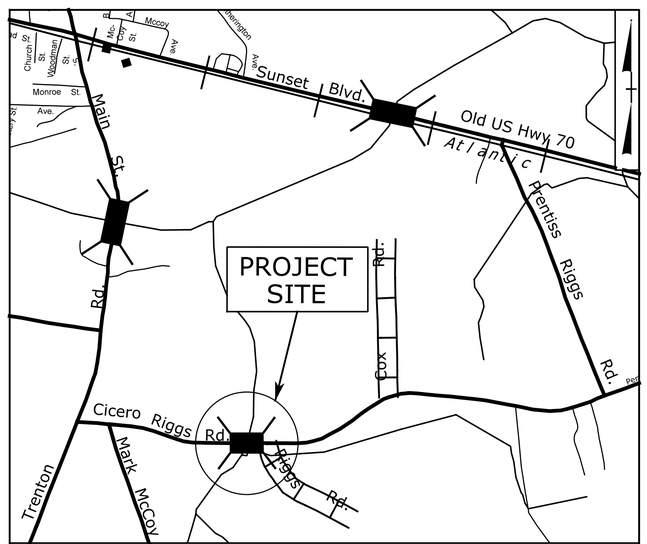

VICINITY MAP

LOCATION: BRIDGE NO. 66 ON SR 1232 (CICERO RIGGS ROAD) OVER GRAPE CREEK

TYPE OF WORK: GRADING, DRAINAGE, PAVING, AND STRUCTURE

INDEX OF SHEETS

SHEET NO.	TITLE
TMP-1	TITLE SHEET, VICINITY MAP, AND INDEX OF SHEETS
TMP-1A	LIST OF APPLICABLE ROADWAY STANDARD DRAWINGS AND LEGEND
TMP-1B	TRANSPORTATION OPERATIONS PLAN: (MANAGEMENT STRATEGIES AND GENERAL NOTES)
TMP-2	OFF-SITE DETOUR

SHEET NO.
TMP-1

PROJECT: BP2.R001.1

DOCUMENT NOT CONSIDERED FINAL UNLESS ALL SIGNATURES COMPLETED

WORK ZONE SAFETY & MOBILITY
"from the MOUNTAINS to the COAST"

PLANS PREPARED BY:

JOHN BAUMAN, P.E.

STEVE MILLER, P.E.

NCDOT CONTACTS:

MICHAEL AMAN, P.E.

DIVISION OF HIGHWAYS
STATE OF NORTH CAROLINA
DEPARTMENT OF TRANSPORTATION
WORK ZONE TRAFFIC CONTROL

TRANSYSTEMS
1 Glenwood Avenue
Raleigh, NC 27603
Tel:919.789.9977
Fax:919.789.9591
License: F-0453

APPROVED: DocuSigned by: John Bauman 78FA6638FE27475...

DATE: 2023.03.14

SEAL

NORTH CAROLINA PROFESSIONAL SEAL 052428 ENGINEER JOHN BAUMAN

3/14/2023
X:\2019\SEI9.II0.05_BP2.R001_Bridge 66\TP\Traffic\TMP\BP2.R001_TMP-1.dgn
jbauman

DocuSign Envelope ID: 88F0DFB3-BCD9-41B2-BA46-D6271A63AC43

PROJ. REFERENCE NO.	SHEET NO.
BP2.R001.1	TMP-1A

ROADWAY STANDARD DRAWINGS

THE FOLLOWING ROADWAY STANDARDS AS SHOWN IN "ROADWAY STANDARD DRAWINGS" - PROJECT SERVICES UNIT - N.C. DEPARTMENT OF TRANSPORTATION - RALEIGH, N.C., DATED JANUARY 2018 ARE APPLICABLE TO THIS PROJECT AND BY REFERENCE HEREBY ARE CONSIDERED A PART OF THESE PLANS:

STD. NO.	TITLE
1101.01	WORK ZONE ADVANCE WARNING SIGNS
1101.03	TEMPORARY ROAD CLOSURES
1101.05	WORK ZONE VEHICLE ACCESSES
1101.11	TRAFFIC CONTROL DESIGN TABLES
1110.01	STATIONARY WORK ZONE SIGNS
1145.01	BARRICADES - TYPE III

LEGEND

GENERAL

- DIRECTION OF TRAFFIC FLOW
- DIRECTION OF PEDESTRIAN TRAFFIC FLOW
- EXIST. PVMT.
- NORTH ARROW
- PROPOSED PVMT.
- TEMP. SHORING (LOCATION PURPOSES ONLY)
- WORK AREA
- REMOVAL

SIGNALS

- EXISTING
- PROPOSED
- TEMPORARY

PAVEMENT MARKINGS

- EXISTING LINES
- TEMPORARY LINES

TRAFFIC CONTROL DEVICES

- BARRICADE (TYPE III)
- CONE
- DRUM
- SKINNY DRUM
- TUBULAR MARKER
- TEMPORARY CRASH CUSHION
- FLASHING ARROW BOARD
- FLAGGER
- LAW ENFORCEMENT
- TRUCK MOUNTED ATTENUATOR (TMA)
- CHANGEABLE MESSAGE SIGN

TEMPORARY SIGNING

- PORTABLE SIGN
- STATIONARY SIGN
- STATIONARY OR PORTABLE SIGN

PAVEMENT MARKERS

- CRYSTAL/CRYSTAL
- CRYSTAL/RED
- YELLOW/YELLOW

PAVEMENT MARKING SYMBOLS

- PAVEMENT MARKING SYMBOLS

TRANSYSTEMS
1 Glenwood Avenue
Raleigh, NC 27603
Tel:919.789.9977
Fax:919.789.9591
License: F-0453

APPROVED: DocuSigned by: John Bauman 78FA8638FE27475...

DATE: 2023.03.14

SEAL

NORTH CAROLINA PROFESSIONAL SEAL 052428 ENGINEER JOHN BAUMAN

DOCUMENT NOT CONSIDERED FINAL UNLESS ALL SIGNATURES COMPLETED

DIVISION OF HIGHWAYS STATE OF NORTH CAROLINA DEPARTMENT OF TRANSPORTATION WORK ZONE TRAFFIC CONTROL

ROADWAY STANDARD DRAWINGS & LEGEND

3/14/2023
X:\2019\SEI9.I10.05_BP2.R001.1_Bridge 66\TP\Traffic\TMP\BP2.R001.1 TMP-1A.dgn
jbauman

DocuSign Envelope ID: 88F0DFB3-BCD9-41B2-BA46-D6271A63AC43

PROJ. REFERENCE NO.	SHEET NO.
RP2.R001.1	TMP-1B

MANAGEMENT STRATEGIES

- CLOSE SR 1232 (CICERO RIGGS ROAD) AND DETOUR TRAFFIC OFF-SITE VIA SR 1001 (TRENTON RD.), SR 1005 (OLD US HWY 70), SR 1233 (PRENTISS RIGGS RD.), AND BACK TO SR 1232 (CICERO RIGGS ROAD).

- LOCAL ACCESS TO ALL RESIDENCES AND BUSINESSES WILL BE MAINTAINED BETWEEN CLOSURE POINTS AT ALL TIMES DURING CONSTRUCTION.

- PROVIDE ONE MONTH NOTICE TO THE ENGINEER, CRAVEN COUNTY EMERGENCY SERVICES, AND CRAVEN COUNTY SCHOOL OFFICIALS PRIOR TO ROAD CLOSURE.

GENERAL NOTES

CHANGES MAY BE REQUIRED WHEN PHYSICAL DIMENSIONS IN THE DETAIL DRAWINGS, STANDARD DETAILS, AND ROADWAY DETAILS ARE NOT ATTAINABLE TO MEET FIELD CONDITIONS OR RESULT IN DUPLICATE OR UNDESIRED OVERLAPPING OF DEVICES. MODIFICATION MAY INCLUDE: MOVING, SUPPLEMENTING, COVERING, OR REMOVAL OF DEVICES AS DIRECTED BY THE ENGINEER.

THE FOLLOWING GENERAL NOTES APPLY AT ALL TIMES FOR THE DURATION OF THE CONSTRUCTION PROJECT EXCEPT WHEN OTHERWISE NOTED IN THE PLAN OR DIRECTED BY THE ENGINEER.

TRAFFIC PATTERN ALTERATIONS

A) NOTIFY THE ENGINEER THIRTY (30) CALENDAR DAYS PRIOR TO ANY TRAFFIC PATTERN ALTERATION.

SIGNING

B) INSTALL ADVANCE WORK ZONE WARNING SIGNS WHEN WORK IS WITHIN 40 FT FROM THE EDGE OF TRAVEL LANE AND NO MORE THAN THREE (3) DAYS PRIOR TO THE BEGINNING OF CONSTRUCTION.

C) PROVIDE SIGNING AND DEVICES REQUIRED TO CLOSE THE ROAD ACCORDING TO THE ROADWAY STANDARD DRAWINGS AND TRAFFIC CONTROL PLANS.

PROVIDE SIGNING REQUIRED FOR THE OFF-SITE DETOUR ROUTE AS SHOWN IN THE TRAFFIC CONTROL PLANS.

D) COVER OR REMOVE ALL SIGNS AND DEVICES REQUIRED TO CLOSE THE ROAD WHEN ROAD CLOSURE IS NOT IN OPERATION.

COVER OR REMOVE ALL SIGNS REQUIRED FOR THE OFF-SITE DETOUR WHEN THE DETOUR IS NOT IN OPERATION.

E) ENSURE ALL NECESSARY SIGNING IS IN PLACE PRIOR TO ALTERING ANY TRAFFIC PATTERN.

TRAFFIC CONTROL DEVICES

F) PLACE TYPE III BARRICADES, WITH "ROAD CLOSED" SIGN R11-2 ATTACHED, OF SUFFICIENT LENGTH TO CLOSE ENTIRE ROADWAY.

G) STATE FORCES WILL INSTALL AND MAINTAIN THE PROJECT DETOUR AND TYPE III BARRICADES AT THE PROJECT LIMITS. STATE FORCES WILL INSTALL MARKING AND MARKERS ON THE FINISHED PROJECT. CONTACT JIM EVANS AT (252)439-2829 TWO WEEKS PRIOR TO CLOSING THE ROAD FOR DETOUR INSTALLATION.

TRANSYSTEMS
1 Glenwood Avenue
Raleigh, NC 27603
Tel:919.789.9977
Fax:919.789.9591
License: F-0453

APPROVED: DocuSigned by: John Bauman 78FA6638FE27475...

DATE: 2023.03.14

SEAL

NORTH CAROLINA PROFESSIONAL SEAL 052428 ENGINEER JOHN BAUMAN

DOCUMENT NOT CONSIDERED FINAL UNLESS ALL SIGNATURES COMPLETED

DIVISION OF HIGHWAYS STATE OF NORTH CAROLINA DEPARTMENT OF TRANSPORTATION WORK ZONE TRAFFIC CONTROL

TRANSPORTATION OPERATION PLAN

3/14/2023
X:\2019\SE19.10.05_BP2.R001.1_Bridge 66\TP\Traffic\TMP\BP2.R001.1TMP-1B.dgn
jbauman

DocuSign Envelope ID: 88F0DFB3-BCD9-41B2-BA46-D6271A63AC43

PROJ. REFERENCE NO.	SHEET NO.
BP2.R001.1	TMP-2

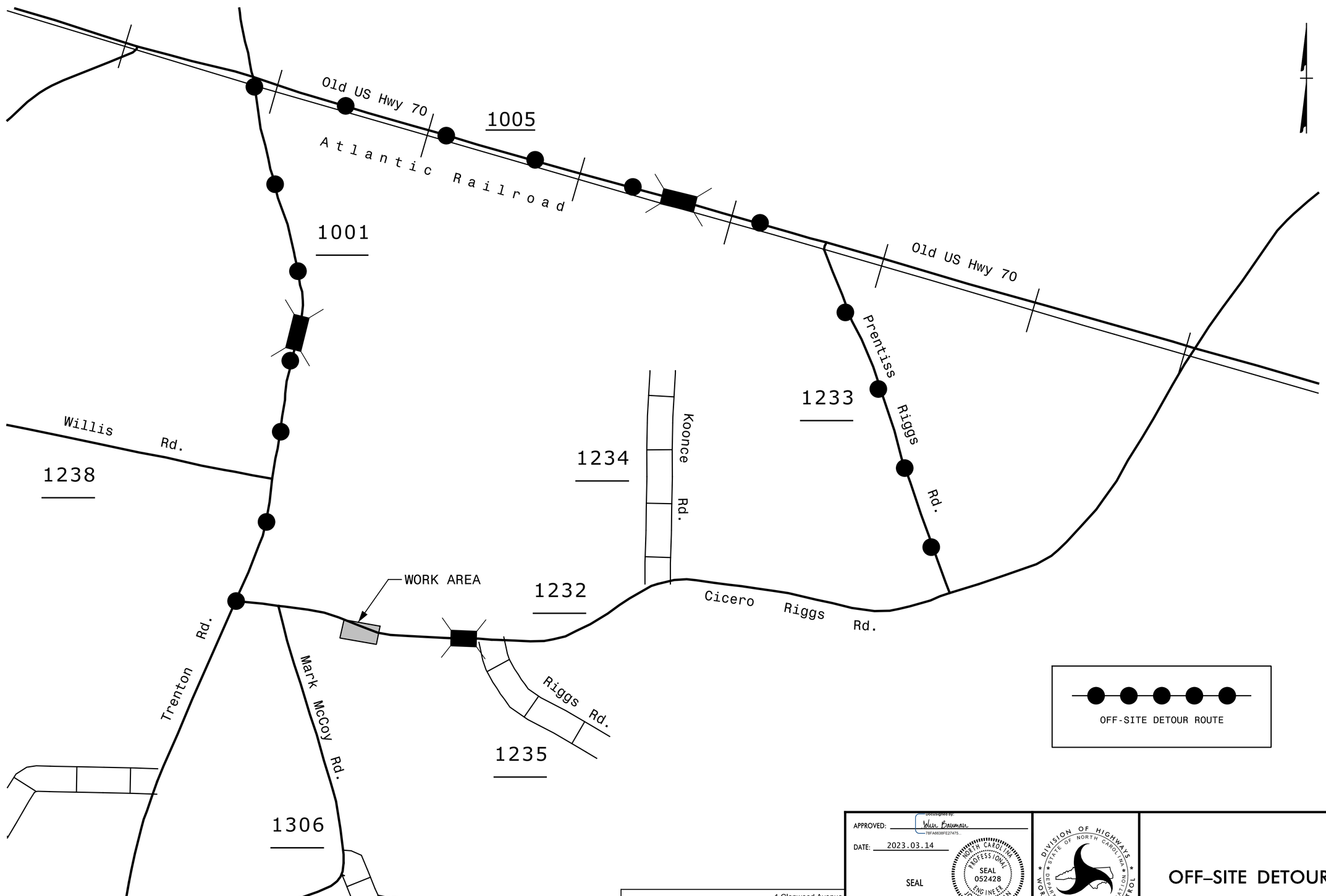

APPROVED: John Bauman
DocuSigned by:
7BFA6630FE27475...

DATE: 2023.03.14

SEAL

NORTH CAROLINA PROFESSIONAL SEAL 052428 ENGINEER JOHN BAUMAN

DOCUMENT NOT CONSIDERED FINAL UNLESS ALL SIGNATURES COMPLETED

DIVISION OF HIGHWAYS STATE OF NORTH CAROLINA DEPARTMENT OF TRANSPORTATION WORK ZONE TRAFFIC CONTROL

OFF–SITE DETOUR

TRANSYSTEMS
1 Glenwood Avenue
Raleigh, NC 27603
Tel:919.789.9977
Fax:919.789.9591
License: F-0453

3/14/2023
X:\2019\SE19.10.05_BP2.R001.1_Bridge 66\TP\Traffic\TMP\BP2.R001.1TMP-2.dgn
jbauman

DocuSign Envelope ID: 88F0DFB3-BCD9-41B2-BA46-D6271A63AC43

PROJECT: BP2.R001.1

PROJECT NO.	SHEET NO.
BP2.R001.1	PMP-1

APPROVED: DocuSigned by: John Bauman 78FA6638FE27475...

DATE: 2023.03.14

SEAL

NORTH CAROLINA PROFESSIONAL SEAL 052428 ENGINEER JOHN BAUMAN

DOCUMENT NOT CONSIDERED FINAL UNLESS ALL SIGNATURES COMPLETED

PAVEMENT MARKING PLAN
CRAVEN COUNTY

LOCATION: BRIDGE NO. 66 ON SR 1232 (CICERO RIGGS ROAD) OVER GRAPE CREEK

INDEX

SHEET NO.	DESCRIPTION
PMP-1	PAVEMENT MARKING PLAN TITLE, GENERAL NOTES, STANDARD DRAWINGS, MARKING SCHEDULE, AND QUANTITITES
PMP-2	PAVEMENT MARKING DETAIL

ROADWAY STANDARD DRAWING

THE FOLLOWING ROADWAY STANDARDS AS APPEAR IN "ROADWAY STANDARD DRAWINGS" - PROJECT SERVICES UNIT - N.C. DEPARTMENT OF TRANSPORTATION - RALEIGH, N.C., DATED JANUARY 2018 ARE APPLICABLE TO THIS PROJECT AND BY REFERENCE HEREBY ARE CONSIDERED A PART OF THESE PLANS:

STD. NO.	TITLE
1205.01	PAVEMENT MARKINGS - LINE TYPES AND OFFSETS
1205.02	PAVEMENT MARKINGS - TWO-LANE AND MULTILANE ROADWAYS
1205.12	PAVEMENT MARKINGS - BRIDGES
1250.01	RAISED PAVEMENT MARKERS - INSTALLATION SPACING
1251.01	RAISED PAVEMENT MARKERS - PERMANENT AND TEMPORARY
1253.01	RAISED PAVEMENT MARKERS - SNOWPLOWABLE

PAVEMENT MARKING SCHEDULE

SYMBOL	DESCRIPTION
	THERMOPLASTIC (24", 90 MILS)
T61	WHITE STOPBAR
	THERMOPLASTIC (4", 90 MILS)
T1	WHITE EDGELINE
T5	2 FT. - 6 FT./SP WHITE MINISKIP
T13	YELLOW DOUBLE CENTER
	POLYUREA (4", 20 MILS)
V1	WHITE EDGELINE
V13	YELLOW DOUBLE CENTER
	PERMANENT RAISED PAVEMENT MARKERS
MA	YELLOW & YELLOW
	NON CAST IRON SNOWPLOWABLE PAVEMENT MARKERS
ME	YELLOW & YELLOW

GENERAL NOTES

THE FOLLOWING GENERAL NOTES APPLY AT ALL TIMES FOR THE DURATION OF THE CONSTRUCTION PROJECT, EXCEPT WHEN OTHERWISE NOTED IN THE PLAN, OR DIRECTED BY THE ENGINEER.

A) INSTALL PAVEMENT MARKINGS AND PAVEMENT MARKERS ON THE FINAL SURFACE AS FOLLOWS:

ROAD NAME	MARKING	MARKER
CICERO RIGGS RD. SR 1232	THERMOPLASTIC	SNOWPLOWABLE
BRIDGE 66	POLYUREA	PERMANENT

B) TIE PROPOSED PAVEMENT MARKING LINES TO EXISTING PAVEMENT MARKING LINES.

C) REMOVE/REPLACE ANY CONFLICTING/DAMAGED PAVEMENT MARKINGS AND MARKERS.

D) REMOVE ALL RESIDUE AND SURFACE LAITANCE BY ACCEPTABLE METHODS ON CONCRETE BRIDGE DECKS PRIOR TO PLACING POLYUREA PAVEMENT MARKING MATERIAL.

SUMMARY OF QUANTITIES

ITEM NO. DESC. NO.	ITEM NO. SECT. NO.	ITEM DESCRIPTION	QUANTITY	UNIT
4685000000-E	1205	THERMOPLASTIC PAVEMENT MARKING LINES (4", 90 MILS)	2325	LF
4847010000-E	1205	POLYUREA PAVEMENT MARKING LINES (4", 20 MILS)	500	LF
4891000000-E	1205	GENERIC PAVEMENT MARKING ITEM (24", 90 MILS)	20	LF
4895000000-N	SP	NON CAST IRON SNOWPLOWABLE PAVEMENT MARKERS	15	EA
4900000000-N	1251	PERMANENT RAISED PAVEMENT MARKERS	3	EA

PLAN PREPARED BY: SEPI INC.

John Bauman, P.E. TRAFFIC DESIGNER

Steve Miller, P.E. TRAFFIC PROJECT MANAGER

TRANSYSTEMS
1 Glenwood Avenue
Raleigh, NC 27603
Tel:919.789.9977
Fax:919.789.9591
License: F-0453

3/14/2023
1:57:04 PM BP2.R001.1_PM_1.dgn
USER: J.Bauman

DocuSign Envelope ID: 88F0DFB3-BCD9-41B2-BA46-D6271A63AC43

TIP NO.	SHEET NO.
BP2.R001.1	PMP-2

APPROVED: DocuSigned by: John Bauman 78FA6638FE27475...

DATE: 2023.03.14

SEAL

NORTH CAROLINA PROFESSIONAL SEAL 052428 ENGINEER JOHN BAUMAN

DOCUMENT NOT CONSIDERED FINAL UNLESS ALL SIGNATURES COMPLETED

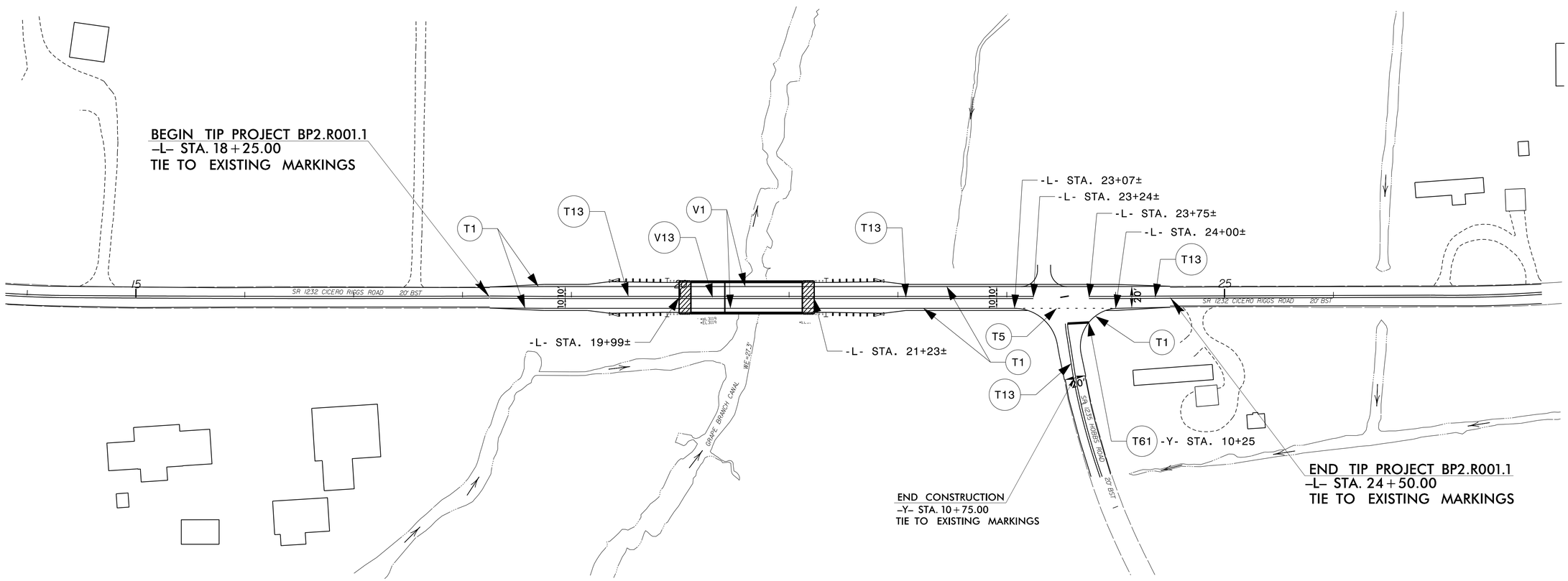

TRANSYSTEMS
1 Glenwood Avenue
Raleigh, NC 27603
Tel:919.789.9977
Fax:919.789.9591
License: F-0453

PAVEMENT MARKING DETAIL

3/14/2023
DGN: BP2_R001.1_PM_2.dgn
USER: bauman

TIP PROJECT: BP2.R001.1

STATE	STATE PROJECT REFERENCE NO.	SHEET NO.	TOTAL SHEETS
N.C.	BP2.R001.1	EC-1	

STATE PROJ. NO.	F. A. PROJ. NO.	DESCRIPTION
BP2.R001.1	N/A	PE

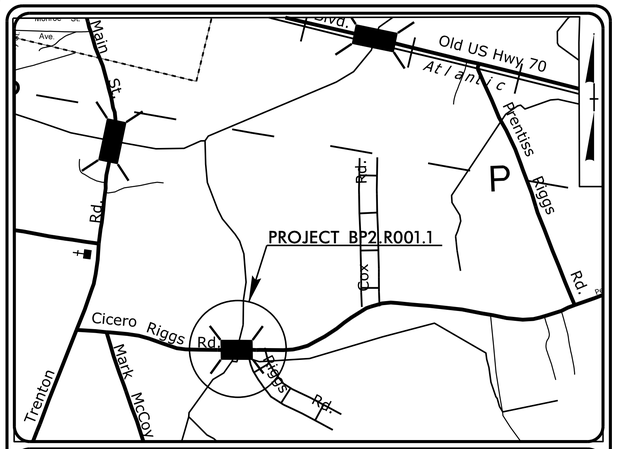

VICINITY MAP
NOT TO SCALE

STATE OF NORTH CAROLINA
DIVISION OF HIGHWAYS

PLAN FOR PROPOSED
HIGHWAY EROSION CONTROL

CRAVEN COUNTY

LOCATION: BRIDGE NO. 66 ON SR 1232 (CICERO RIGGS ROAD) OVER GRAPE CREEK
TYPE OF WORK: GRADING, DRAINAGE, PAVING, EROSION CONTROL, AND STRUCTURE

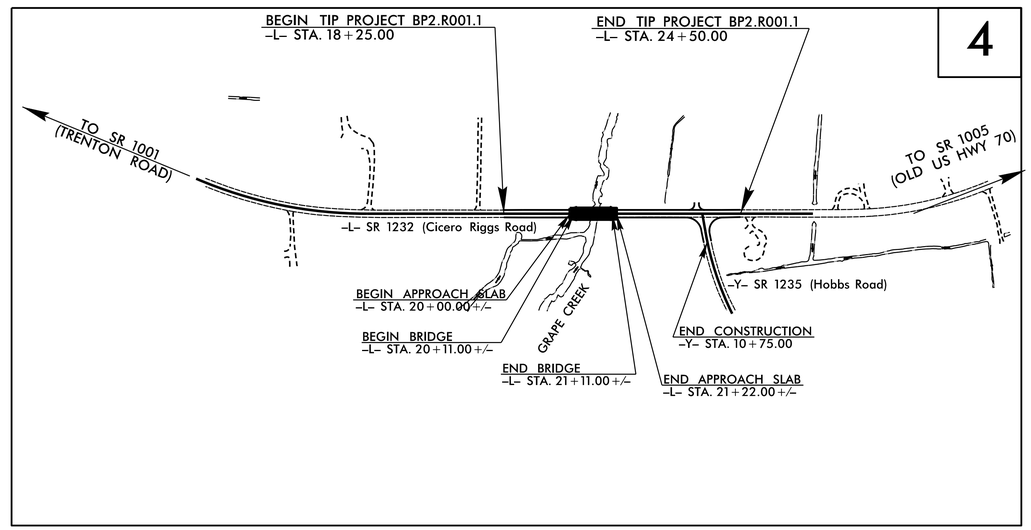

NAD 83/NA 2011

ENVIRONMENTALLY SENSITIVE AREA(S) EXIST ON THIS PROJECT

Refer To E. C. Special Provisions for Special Considerations.

EROSION AND SEDIMENT CONTROL MEASURES

Std. #	Description	Symbol
1630.03	Temporary Silt Ditch	TSD
1630.05	Temporary Diversion	TD
1605.01	Temporary Silt Fence	
1606.01	Special Sediment Control Fence	
1622.01	Temporary Berms and Slope Drains	
1630.02	Silt Basin Type B	
1633.01	Temporary Rock Silt Check Type-A	
	Temporary Rock Silt Check Type-A with Matting and Polyacrylamide (PAM)	
1633.02	Temporary Rock Silt Check Type-B	
	Wattle/ Coir Fiber Wattle	SW CFW
	Wattle/ Coir Fiber Wattle with Polyacrylamide (PAM)	
1634.01	Temporary Rock Sediment Dam Type-A	
1634.02	Temporary Rock Sediment Dam Type-B	
1635.01	Rock Pipe Inlet Sediment Trap Type-A	
1635.02	Rock Pipe Inlet Sediment Trap Type-B	
1630.04	Stilling Basin	
1630.06	Special Stilling Basin	
	Rock Inlet Sediment Trap:	
1632.01	Type A	A
1632.02	Type B	B
1632.03	Type C	C
	Skimmer Basin	
	Tiered Skimmer Basin	
	Infiltration Basin	

THIS PROJECT CONTAINS EROSION CONTROL PLANS FOR CLEARING AND GRUBBING PHASE OF CONSTRUCTION.

THIS PROJECT HAS BEEN DESIGNED TO SENSITIVE WATERSHED STANDARDS.

GRAPHIC SCALE

50 25 0 50 100
PLANS

THESE EROSION AND SEDIMENT CONTROL PLANS COMPLY WITH THE APPLICABLE REGULATIONS SET FORTH BY THE NCG-010000 GENERAL CONSTRUCTION PERMIT EFFECTIVE APRIL 1, 2019 AND ISSUED BY THE NORTH CAROLINA DEPARTMENT OF ENVIRONMENTAL QUALITY DIVISION OF WATER RESOURCES.

SEPI
Engineering & Construction, Inc.

Prepared In the Office of:

SEPI, Inc.
1 Glenwood Avenue
Raleigh, NC 27603
Tel:919.789.9977
Fax:919.789.9591
License: C-2197

Designed by:

ANDREW M. HOWELL ***3105***
NAME *LEVEL III CERTIFICATION NO.*

Roadway Standard Drawings

The following roadway english standards as appear in "Roadway Standard Drawings"- Roadway Design Unit - N. C. Department of Transportation - Raleigh, N. C., dated January 2018 and the latest revison thereto are applicable to this project and by reference hereby are considered a part of these plans.

1604.01	Railroad Erosion Control Detail	1632.01	Rock Inlet Sediment Trap Type A
1605.01	Temporary Silt Fence	1632.02	Rock Inlet Sediment Trap Type B
1606.01	Special Sediment Control Fence	1632.03	Rock Inlet Sediment Trap Type C
1607.01	Gravel Construction Entrance	1633.01	Temporary Rock Silt Check Type A
1622.01	Temporary Berms and Slope Drains	1633.02	Temporary Rock Silt Check Type B
1630.01	Riser Basin	1634.01	Temporary Rock Sediment Dam Type A
1630.02	Silt Basin Type B	1634.02	Temporary Rock Sediment Dam Type B
1630.03	Temporary Silt Ditch	1635.01	Rock Pipe Inlet Sediment Trap Type A
1630.04	Stilling Basin	1635.02	Rock Pipe Inlet Sediment Trap Type B
1630.05	Temporary Diversion	1640.01	Coir Fiber Baffle
1630.06	Special Stilling Basin	1645.01	Temporary Stream Crossing
1631.01	Matting Installation		

PROJECT REFERENCE NO.	SHEET NO.
BP.2.R001.1	EC-2

TEMPORARY ROCK SILT CHECK TYPE 'A' WITH EXCELSIOR MATTING AND POLYACRYLAMIDE (PAM)

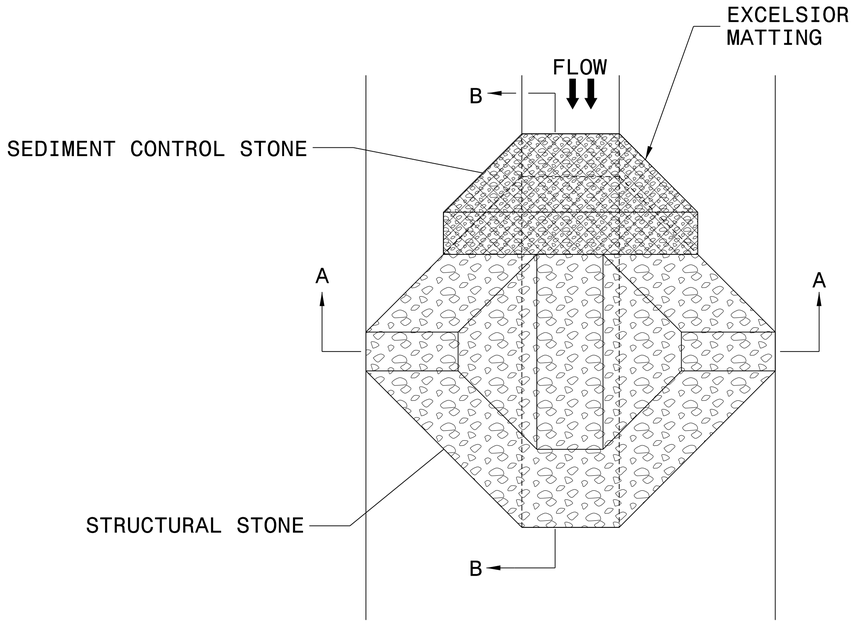

PLAN

NOTES:

INSTALL TEMPORARY ROCK SILT CHECK TYPE A IN ACCORDANCE WITH ROADWAY STANDARD DRAWING NO. 1633.01.

USE EXCELSIOR FOR MATTING MATERIAL AND ANCHOR MATTING SECTION AT TOP AND BOTTOM WITH CLASS B STONE.

PRIOR TO POLYACRYLAMIDE (PAM) APPLICATION, OBTAIN A SOIL SAMPLE FROM PROJECT LOCATION, AND FROM OFFSITE MATERIAL, AND ANALYZE FOR APPROPRIATE PAM FLOCCULANT TO BE APPLIED TO EACH ROCK SILT CHECK.

INITIALLY APPLY 4 OUNCES OF POLYACRYLAMIDE (PAM) TO TOP OF MATTING SECTION AND AFTER EVERY RAINFALL EVENT THAT EQUALS OR EXCEEDS 0.50 INCHES.

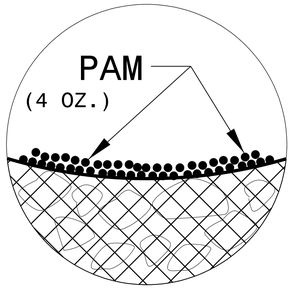

INSET A

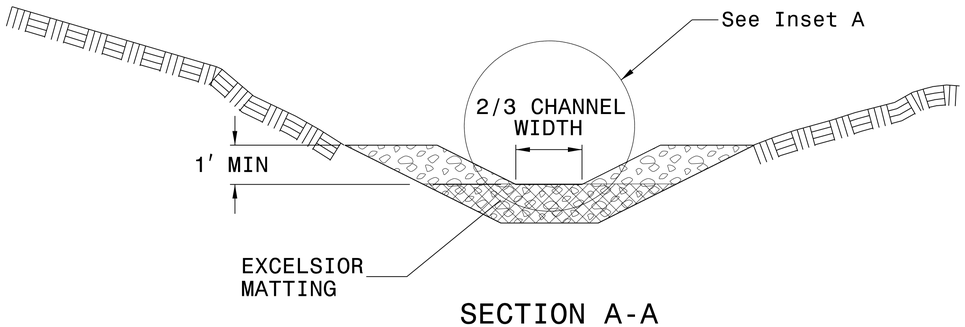

SECTION A-A

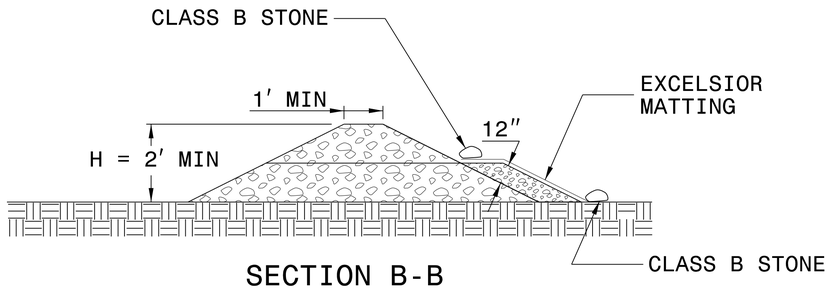

SECTION B-B

NOT TO SCALE

PROJECT REFERENCE NO.	SHEET NO.
BP2.R001J	EC-2A

SEPI Engineering & Construction, Inc.
1 Glenwood Avenue
Raleigh, NC 27603
Tel:919.789.9977
Fax:919.789.9591
License: C-2197

ONSITE CONCRETE WASHOUT STRUCTURE WITH LINER

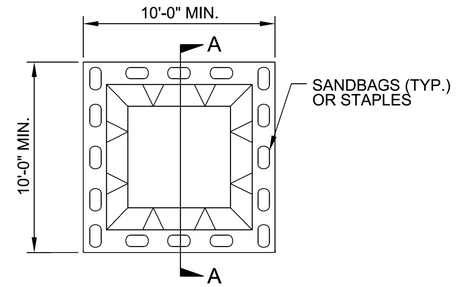

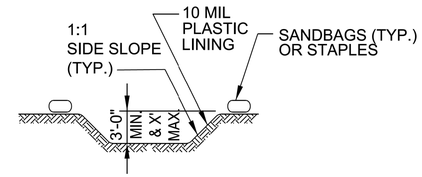

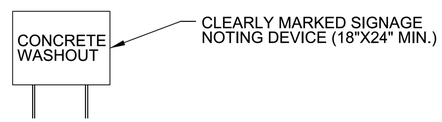

PLAN

SECTION A-A

NOTES:
1. ACTUAL LOCATION DETERMINED IN FIELD

2. THE CONCRETE WASHOUT STRUCTURES SHALL BE MAINTAINED WHEN THE LIQUID AND/OR SOLID REACHES 75% OF THE STRUCTURES CAPACITY.

3.CONCRETE WASHOUT STRUCTURE NEEDS TO BE CLEARY MARKED WITH SIGNAGE NOTING DEVICE.

BELOW GRADE WASHOUT STRUCTURE

NOT TO SCALE

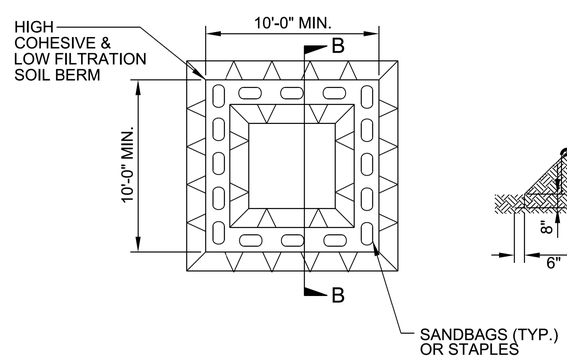

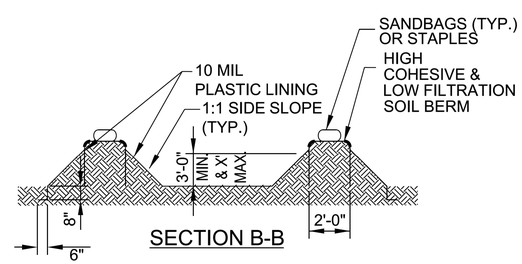

SECTION B-B

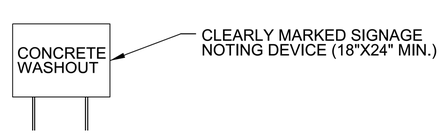

PLAN

NOTES:
1. ACTUAL LOCATION DETERMINED IN FIELD

2. THE CONCRETE WASHOUT STRUCTURES SHALL BE MAINTAINED WHEN THE LIQUID AND/OR SOLID REACHES 75% OF THE STRUCTURES CAPACITY TO PROVIDE ADEQUATE HOLDING CAPACITY WITH A MINIMUM 12 INCHES OF FREEBOARD.

3.CONCRETE WASHOUT STRUCTURE NEEDS TO BE CLEARY MARKED WITH SIGNAGE NOTING DEVICE.

ABOVE GRADE WASHOUT STRUCTURE

NOT TO SCALE

6/2/99
4/22/2022 12:43:46 PM
USER:bmazzeo
rev_EC2_Detail.dgn

PROJECT REFERENCE NO.	SHEET NO.
BP2.R001J	EC-2B

SEPI Engineering & Construction, Inc.
1 Glenwood Avenue
Raleigh, NC 27603
Tel:919.789.9977
Fax:919.789.9591
License: C-2197

COIR FIBER WATTLE WITH POLYACRYLAMIDE (PAM) DETAIL

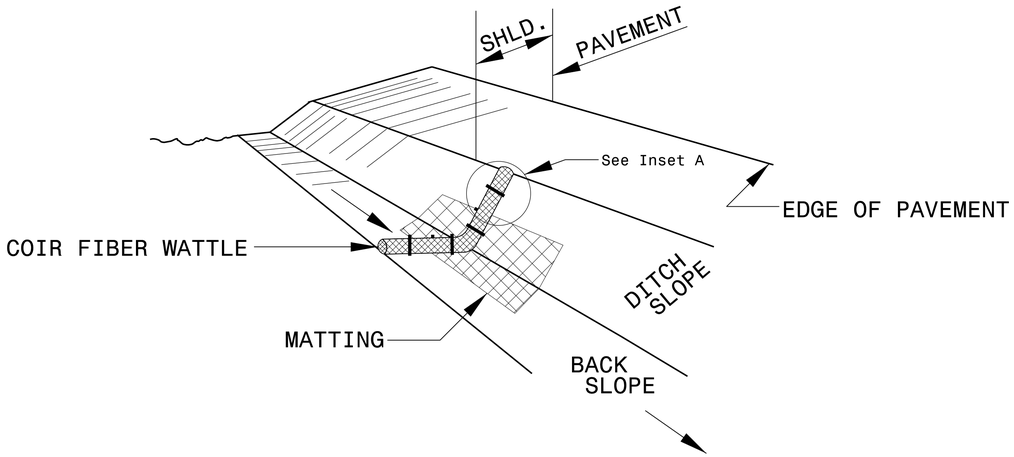

ISOMETRIC VIEW

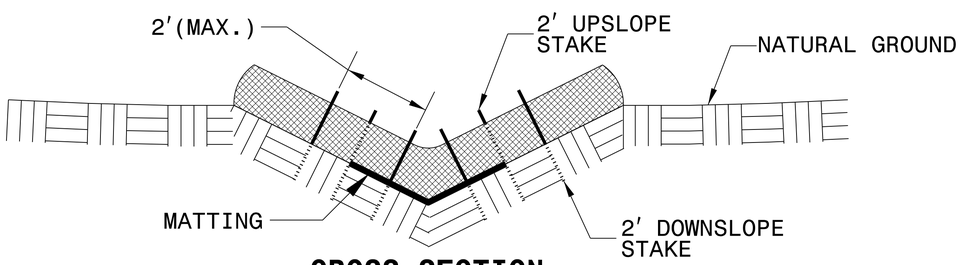

CROSS SECTION VEE DITCH

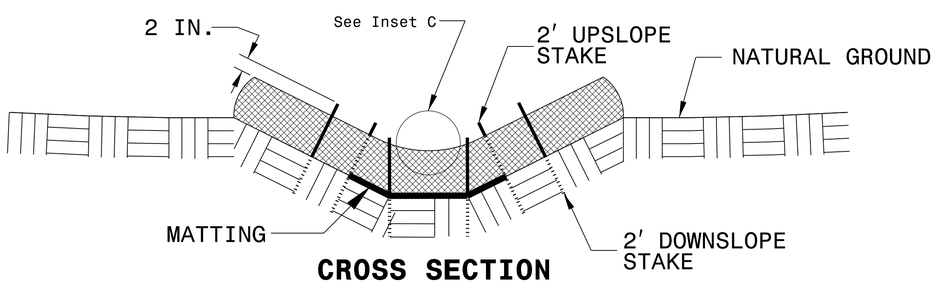

CROSS SECTION TRAPEZOIDAL DITCH

NOTES:

USE MINIMUM 12 IN. DIAMETER COIR FIBER (COCONUT FIBER) WATTLE.

USE 2 FT. WOODEN STAKES WITH A 2 IN. BY 2 IN. NOMINAL CROSS SECTION.

ONLY INSTALL WATTLE(S) TO A HEIGHT IN DITCH SO FLOW WILL NOT WASH AROUND WATTLE AND SCOUR DITCH SLOPES AND AS DIRECTED.

INSTALL A MINIMUM OF 2 UPSLOPE STAKES AND 4 DOWNSLOPE STAKES AT AN ANGLE TO WEDGE WATTLE TO BOTTOM OF DITCH.

PROVIDE STAPLES MADE OF 0.125 IN. DIAMETER STEEL WIRE FORMED INTO A U SHAPE NOT LESS THAN 12" IN LENGTH.

INSTALL STAPLES APPROXIMATELY EVERY 1 LINEAR FOOT ON BOTH SIDES OF WATTLE AND AT EACH END TO SECURE IT TO THE SOIL.

INSTALL MATTING IN ACCORDANCE WITH SECTION 1631 OF THE STANDARD SPECIFICATIONS.

PRIOR TO POLYACRYLAMIDE (PAM) APPLICATION, OBTAIN A SOIL SAMPLE FROM PROJECT LOCATION, AND FROM OFFSITE MATERIAL, AND ANALYZE FOR APPROPRIATE PAM FLOCCULANT TO BE APPLIED TO EACH WATTLE.

INITIALLY APPLY 2 OUNCES OF ANIONIC OR NEUTRALLY CHARGED PAM OVER WATTLE WHERE WATER WILL FLOW AND 1 OUNCE OF PAM ON MATTING ON EACH SIDE OF WATTLE. REAPPLY PAM AFTER EVERY RAINFALL EVENT THAT IS EQUAL TO OR EXCEEDS 0.50 IN.

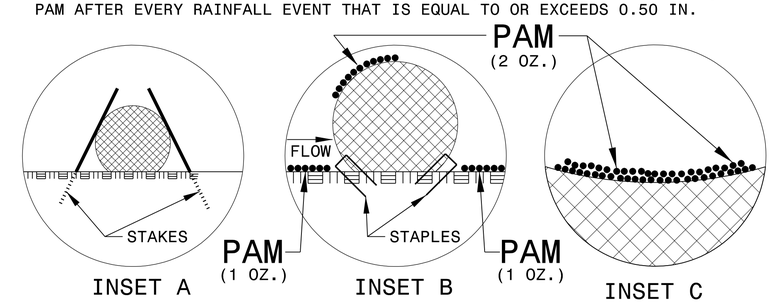

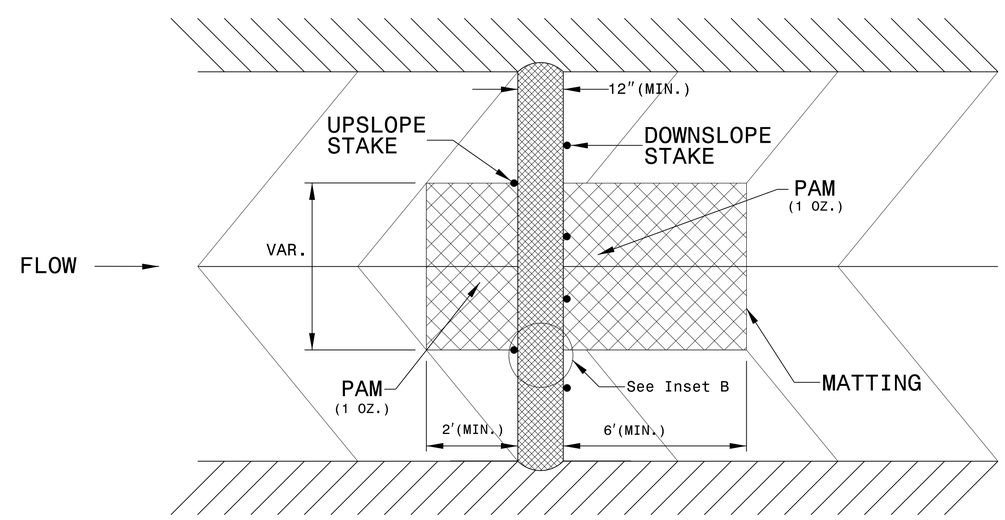

TOP VIEW

PROJECT REFERENCE NO.	SHEET NO.
BP2.R001J	EC-2C

SEPI Engineering & Construction, Inc.
1 Glenwood Avenue
Raleigh, NC 27603
Tel:919.789.9977
Fax:919.789.9591
License: C-2197

SILT FENCE COIR FIBER WATTLE BREAK DETAIL

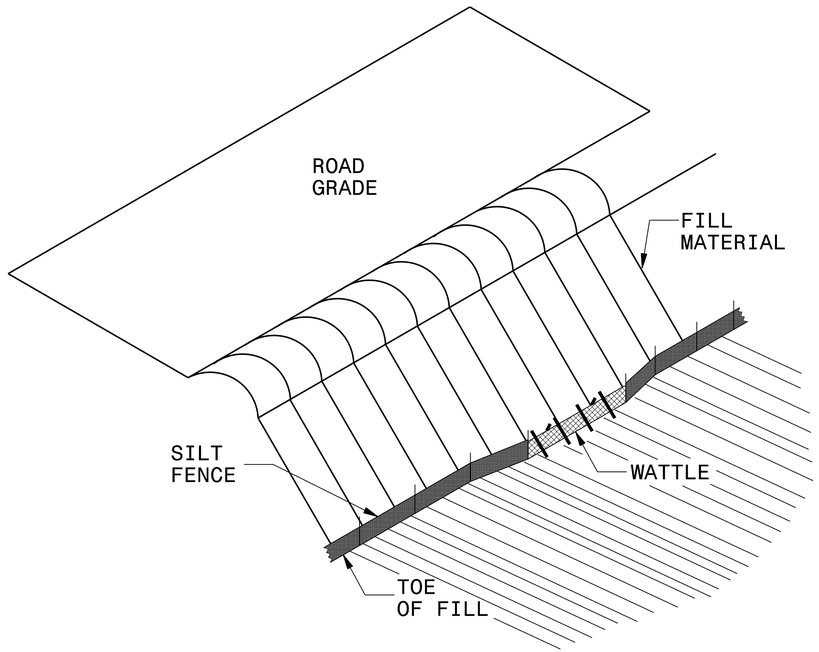

ISOMETRIC VIEW

NOTES:

USE MINIMUM 12 IN. DIAMETER COIR FIBER (COCONUT FIBER) WATTLE AND LENGTH OF 10 FT.

EXCAVATE A 1 TO 2 INCH TRENCH FOR WATTLE TO BE PLACED.

DO NOT PLACE WATTLE ON TOE OF SLOPE.

USE 2 FT. WOODEN STAKES WITH A 2 IN. BY 2 IN. NOMINAL CROSS SECTION.

INSTALL A MINIMUM OF 2 UPSLOPE STAKES AND 4 DOWNSLOPE STAKES AT AN ANGLE TO WEDGE WATTLE TO GROUND.

PROVIDE STAPLES MADE OF 0.125 IN. DIAMETER STEEL WIRE FORMED INTO A U SHAPE NOT LESS THAN 12″ IN LENGTH.

INSTALL STAPLES APPROXIMATELY EVERY 1 LINEAR FOOT ON BOTH SIDES OF WATTLE AND AT EACH END TO SECURE IT TO THE SOIL.

WATTLE INSTALLATION CAN BE ON OUTSIDE OF THE SILT FENCE AS DIRECTED.

INSTALL TEMPORARY SILT FENCE IN ACCORDANCE WITH SECTION 1605 OF THE STANDARD SPECIFICATIONS.

INSET A

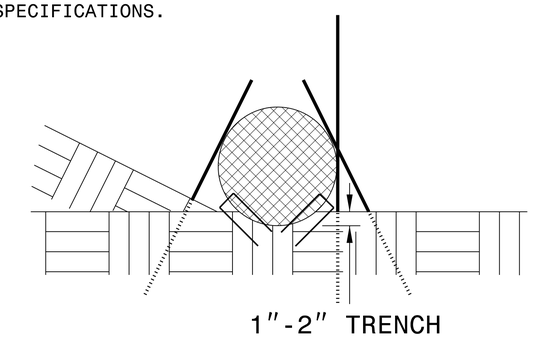

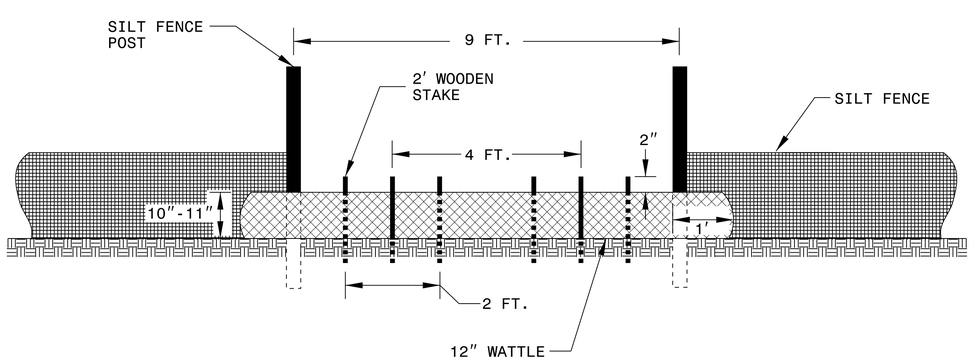

VIEW FROM SLOPE

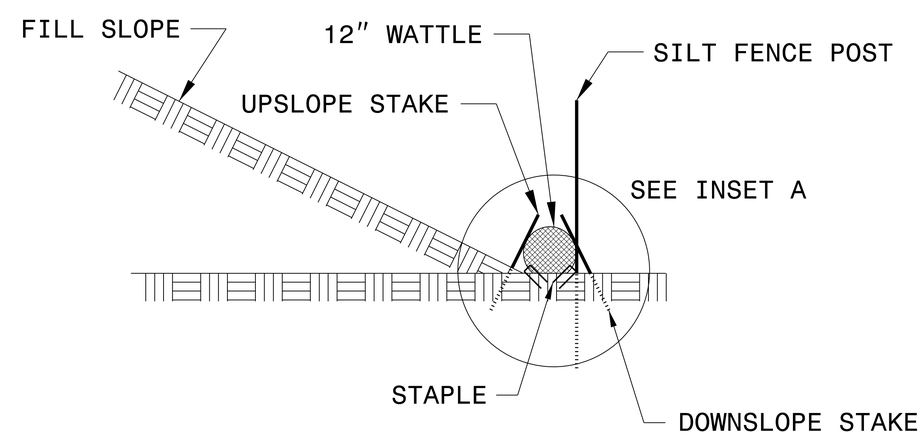

SIDE VIEW

PROJECT REFERENCE NO.	SHEET NO.
BP2.R001.1	EC-3

SEPI Engineering & Construction, Inc.
1 Glenwood Avenue
Raleigh, NC 27603
Tel:919.789.9977
Fax:919.789.9591
License: C-2197

DIVISION OF HIGHWAYS
STATE OF NORTH CAROLINA

SOIL STABILIZATION TIMEFRAMES

SITE DESCRIPTION	STABILIZATION TIME	TIMEFRAME EXCEPTIONS
PERIMETER DIKES, SWALES, DITCHES AND SLOPES	7 DAYS	NONE
HIGH QUALITY WATER (HQW) ZONES	7 DAYS	NONE
SLOPES STEEPER THAN 3:1	7 DAYS	IF SLOPES ARE 10' OR LESS IN LENGTH AND ARE NOT STEEPER THAN 2:1, 14 DAYS ARE ALLOWED.
SLOPES 3:1 OR FLATTER	14 DAYS	7 DAYS FOR SLOPES GREATER THAN 50' IN LENGTH.
ALL OTHER AREAS WITH SLOPES FLATTER THAN 4:1	14 DAYS	NONE, EXCEPT FOR PERIMETERS AND HQW ZONES.

PROJECT REFERENCE NO.	SHEET NO.
BP2.R001J	EC-3A

SEPI Engineering & Construction, Inc.
1 Glenwood Avenue
Raleigh, NC 27603
Tel:919.789.9977
Fax:919.789.9591
License: C-2197

DIVISION OF HIGHWAYS
STATE OF NORTH CAROLINA

SOIL STABILIZATION SUMMARY SHEET

MATTING FOR EROSION CONTROL

CONST SHEET NO.	LINE	FROM STATION	TO STATION	SIDE	ESTIMATE (SY)
4	-L-	18+50	20+60	LT	210
4	-L-	18+50	20+60	RT	210
4	-L-	20+90	23+25	LT	230
4	-L-	21+40	23+00	RT	225
				SUBTOTAL	875
MISCELLANEOUS MATTING TO BE INSTALLED AS DIRECTED BY THE ENGINEER					1590
				TOTAL	2525

MATTING FOR EROSION CONTROL

CONST SHEET NO.	LINE	FROM STATION	TO STATION	SIDE	ESTIMATE (SY)

6/2/99

SEPI Engineering & Construction, Inc.
1 Glenwood Avenue
Raleigh, NC 27603
Tel:919.789.9977
Fax:919.789.9591
License: C-2197

PROJECT REFERENCE NO.	SHEET NO.
BP2.R001.I	EC-4/CONST-4
ROADWAY DESIGN ENGINEER	PAVEMENT DESIGN ENGINEER

INCOMPLETE PLANS
DO NOT USE FOR R/W ACQUISITION

DOCUMENT NOT CONSIDERED FINAL UNLESS ALL SIGNATURES COMPLETED

NAD 83/NA 2011

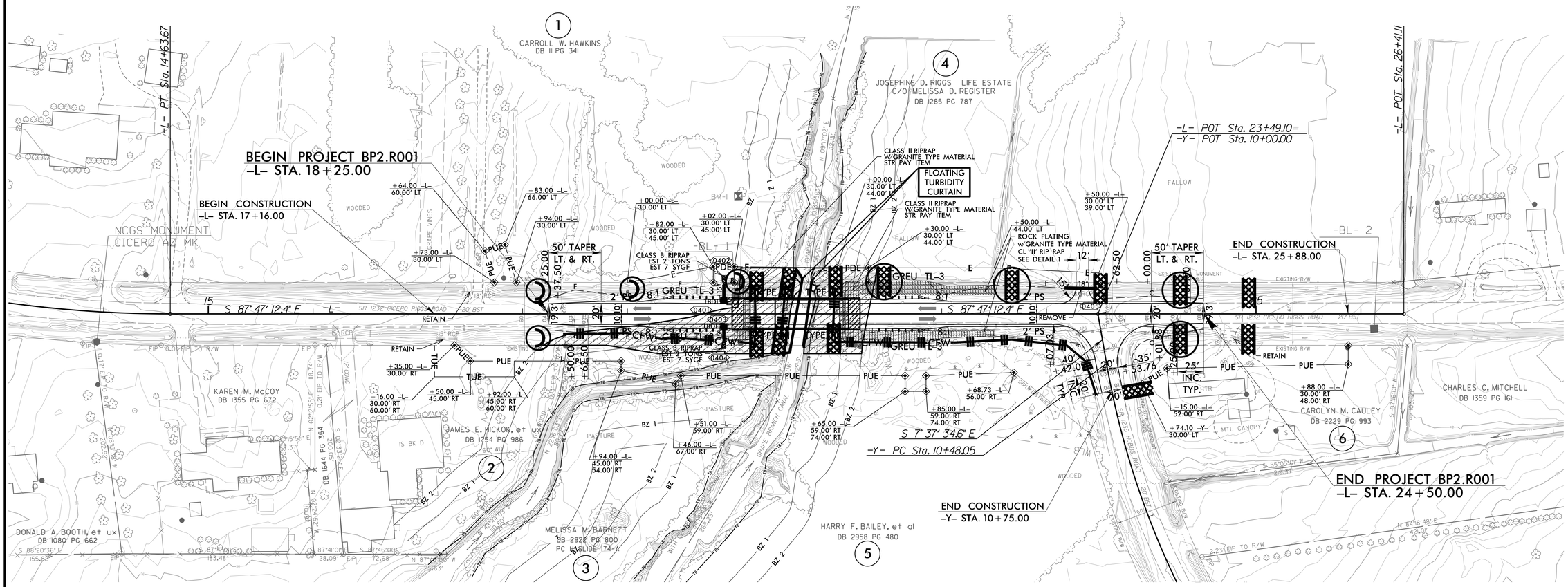

DO NOT INSTALL MATTING WITH NYLON MESH WITHIN 25' OF THE TOP OF STREAM BANK OR OPEN WATER

CLEARING AND GRUBBING EROSION CONTROL FOR CONSTRUCTION SHEET 4

NOTE:
PLACE TEMPORARY ROCK SEDIMENT DAMS TYPE – B AND TEMPORARY ROCK SILT CHECKS TYPE – A AT DRAINAGE OUTLETS.

12/8/2022
BP2.R001.I_EC_CG.dgn
jgstephens7zach

6/2/99

SEPI Engineering & Construction, Inc.
1 Glenwood Avenue
Raleigh, NC 27603
Tel:919.789.9977
Fax:919.789.9591
License: C-2197

PROJECT REFERENCE NO.	SHEET NO.
BP2.R001.I	EC-5/CONST-4
ROADWAY DESIGN ENGINEER	PAVEMENT DESIGN ENGINEER

INCOMPLETE PLANS
DO NOT USE FOR R/W ACQUISITION

DOCUMENT NOT CONSIDERED FINAL UNLESS ALL SIGNATURES COMPLETED

NAD 83/NA 2011

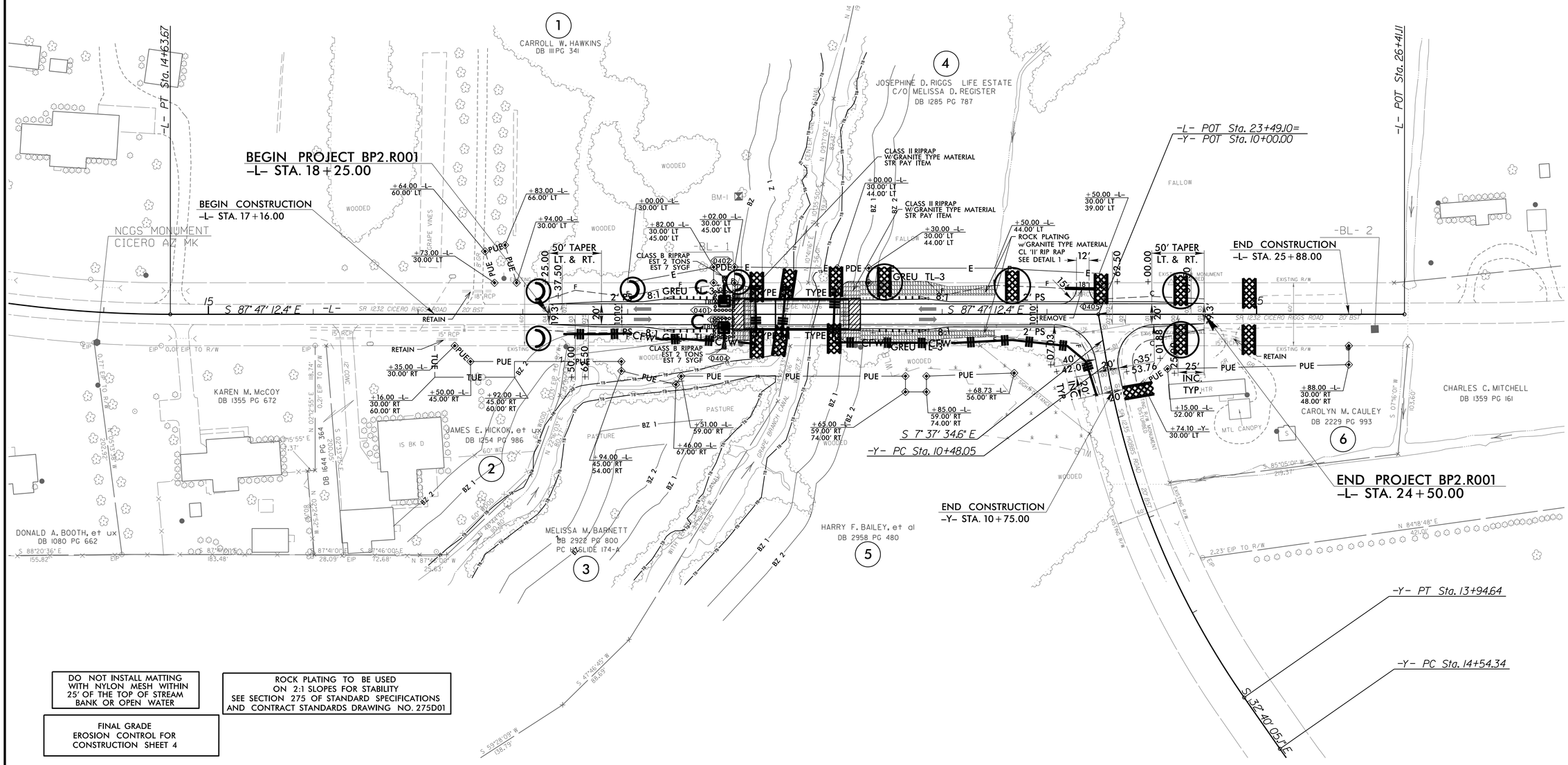

DO NOT INSTALL MATTING WITH NYLON MESH WITHIN 25' OF THE TOP OF STREAM BANK OR OPEN WATER

ROCK PLATING TO BE USED ON 2:1 SLOPES FOR STABILITY SEE SECTION 275 OF STANDARD SPECIFICATIONS AND CONTRACT STANDARDS DRAWING NO. 275D01

FINAL GRADE EROSION CONTROL FOR CONSTRUCTION SHEET 4

12/8/2022
BP2.R001.I_EC_Final.dgn
USER:BMcFadden

PROJECT REFERENCE NO.	SHEET NO.
BP.2.R001J	RF-1

SEPI Engineering & Construction, Inc.
1 Glenwood Avenue
Raleigh, NC 27603
Tel:919.789.9977
Fax:919.789.9591
License: C-2197

PLANTING DETAILS

SEEDLING / LINER BAREROOT PLANTING DETAIL

HEALING IN

1. Locate a healing-in site in a shady, well protected area.
2. Excavate a flat bottom trench 12 inches deep and provide drainage.

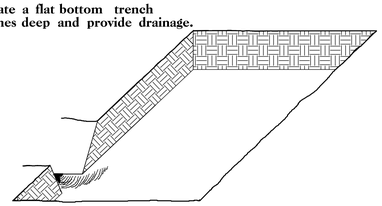

3. Backfill the trench with 2 inches well rotted sawdust. Place a 2 inch layer of well rotted sawdust at a sloping angle at one end of the trench.

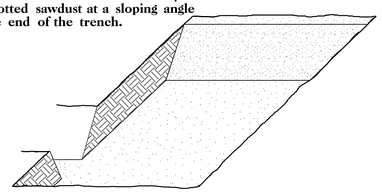

4. Place a single layer of plants against the sloping end so that the root collar is at ground level.

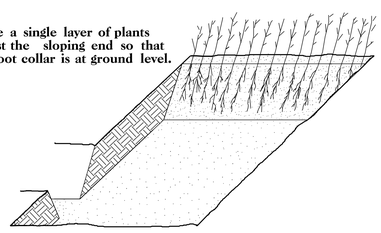

5. Place a 2 inch layer of well rotted sawdust over the roots maintaining a sloping angle.

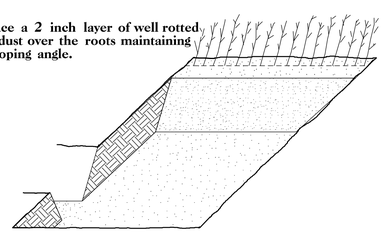

6. Repeat layers of plants and sawdust as necessary and water thoroughly.

DIBBLE PLANTING METHOD
USING THE KBC PLANTING BAR

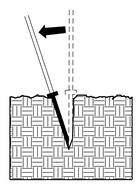

1. Insert planting bar as shown and pull handle toward planter.

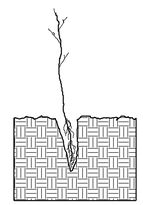

2. Remove planting bar and place seedling at correct depth.

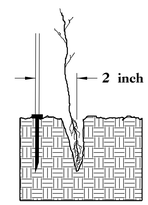

3. Insert planting bar 2 inches toward planter from seedling.

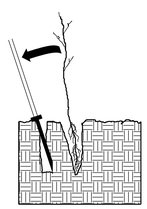

4. Pull handle of bar toward planter, firming soil at bottom.

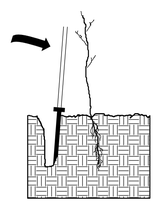

5. Push handle forward firming soil at top.

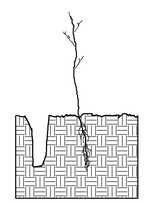

6. Leave compaction hole open. Water thoroughly.

PLANTING NOTES:

PLANTING BAG
During planting, seedlings shall be kept in a moist canvas bag or similar container to prevent the root systems from drying.

KBC PLANTING BAR
Planting bar shall have a blade with a triangular cross section, and shall be 12 inches long, 4 inches wide and 1 inch thick at center.

ROOT PRUNING
All seedlings shall be root pruned, if necessary, so that no roots extend more than 10 inches below the root collar.

REFORESTATION

☐ TREE REFORESTATION SHALL BE PLANTED 6 FT. TO 10 FT. ON CENTER, RANDOM SPACING, AVERAGING 8 FT. ON CENTER, APPROXIMATELY 680 PLANTS PER ACRE.

REFORESTATION

MIXTURE, TYPE, SIZE, AND FURNISH SHALL CONFORM TO THE FOLLOWING:

33%	LIRIODENDRON TULIPIFERA	TULIP POPLAR	12 in – 18 in BR
33%	PLATANUS OCCIDENTALIS	AMERICAN SYCAMORE	12 in – 18 in BR
34%	BETULA NIGRA	RIVER BIRCH	12 in – 18 in BR

REFORESTATION DETAIL SHEET

N.C.D.O.T. - ROADSIDE ENVIRONMENTAL UNIT

DocuSign Envelope ID: B6AB875C-AFFF-4541-B775-5CF9C0CF8A54

TIP PROJECT: BP2.R001.1

T.I.P. NO.	SHEET NO.
BP2.R001.1	UC–1

DOCUMENT NOT CONSIDERED FINAL UNLESS ALL SIGNATURES COMPLETED

STATE OF NORTH CAROLINA
DIVISION OF HIGHWAYS

UTILITY CONSTRUCTION PLANS
CRAVEN COUNTY

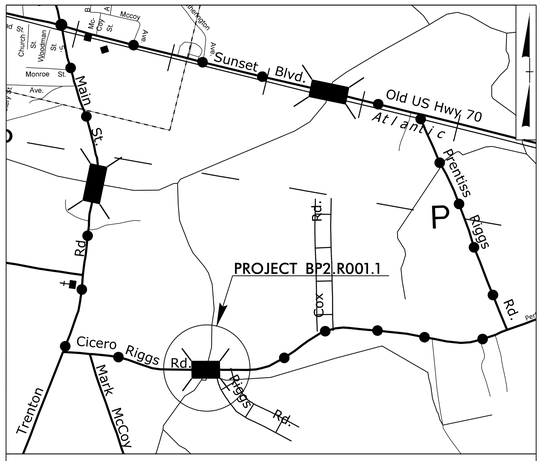

VICINITY MAP

DETOUR ROUTE

LOCATION: BRIDGE NO.66 ON SR 1232 (CICERO RIGGS RD) OVER GRAPE CREEK

TYPE OF WORK: WATER LINE RELOCATION

(UC–4)

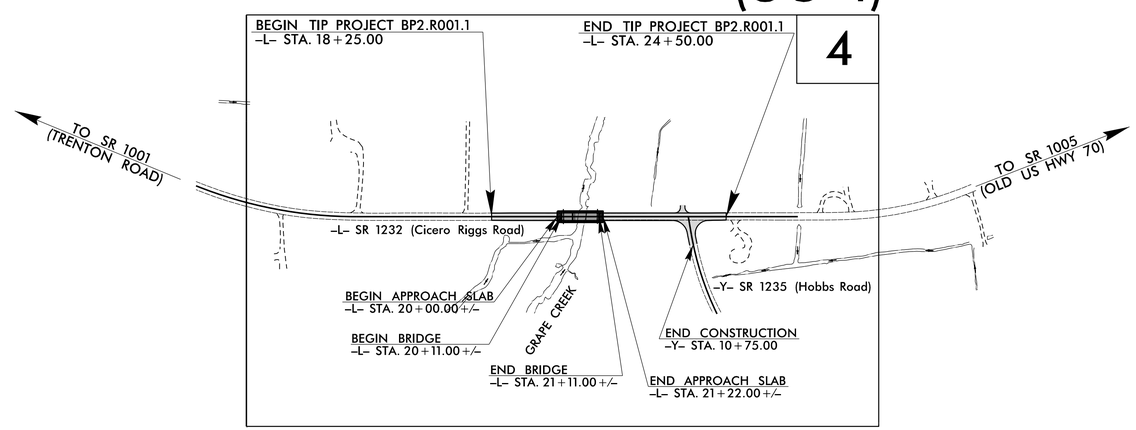

NAD 83/NA 2011

GRAPHIC SCALES

50 25 0 50 100
PLANS

50 25 0 50 100
PROFILE (HORIZONTAL)

10 5 0 10 20
PROFILE (VERTICAL)

INDEX OF SHEETS

SHEET NO.	DESCRIPTION
UC–1	TITLE SHEET
UC–2	UTILITY SYMBOLOGY
UC–3	NOTES
UC–3A	DETAILS
UC–4	UTILITY CONSTRUCTION SHEET
UC–5	PROFILE SHEET

WATER OWNER ON PROJECT

(A) CRAVEN COUNTY

PREPARED IN THE OFFICE OF:

HINDE ENGINEERING
License No. C-2639
401 Harrison Oaks Blvd., Suite 220 Cary, NC 27513
Ph. (919) 653-0001

Clint L. Stevens, P.E.	UTILITIES PROJECT MANAGER
Jordan K. Chapman	UTILITIES PROJECT ENGINEER
James N. Arnold	UTILITIES PROJECT DESIGNER

SEAL

Docu Signed by:
Clint L. Stevens
040370
9D6B32D777EB42D...
1/30/2023

DIVISION OF HIGHWAYS
DIVISION 2
2815 ROUSE ROAD EXTENSION
KINSTON NC 28504
PHONE (252) 775–6100
FAX (252) 208–7862

Jeff Cabaniss, P.E.	DIVISION ENGINEER
Cadmus Capehart, P.E.	DIVISION CONSTRUCTION ENGR
David Kramer	DIVISION UTILITY ENGINEER

11-JAN-2023 13:25
>\\Hindelocal\Shares\Server Files\PROJECTS\2021\A202180L00_SEPI_BP2-R001-L_(B-4483)\Design\Utilities\Engineering\UC\Proj\BP2.R001.LUT_tsh_UCL.psh.dgn
$$$$USERNAME$$$$

STATE OF NORTH CAROLINA
DIVISION OF HIGHWAYS

HINDE ENGINEERING
License No. C-2639
401 Harrison Oaks Blvd., Suite 220 Cary, NC 27513

PROJECT REFERENCE NO.	SHEET NO.
BP2.R001.1	UC-2

UTILITIES PLAN SHEET SYMBOLS

PROPOSED WATER SYMBOLS

- Water Line (Sized as Shown) — 12" WL
- 11¼ Degree Bend
- 22½ Degree Bend
- 45 Degree Bend
- 90 Degree Bend
- Plug
- Tee
- Cross
- Reducer
- Gate Valve — GV
- Butterfly Valve — BV
- Tapping Valve — TGV
- Line Stop — LS
- Line Stop with Bypass — LS/BP
- Blow Off — BO
- Fire Hydrant — PFH
- Relocate Fire Hydrant — RFH
- Remove Fire Hydrant — REM FH
- Water Meter — PWM
- Relocate Water Meter — RWM
- Remove Water Meter — REM WM
- Water Pump Station — PS(W)
- RPZ Backflow Preventer — PRPZ
- DCV Backflow Preventer — PBFP
- Relocate RPZ Backflow Preventer — RRPZ
- Relocate DCV Backflow Preventer — RBFP

PROPOSED SEWER SYMBOLS

- Gravity Sewer Line (Sized as Shown) — 12" SS
- Force Main Sewer Line (Sized as Shown) — 12" FSS
- Manhole (Sized per Note)
- Sewer Pump Station — PS(SS)

PROPOSED MISCELLANOUS UTILITIES SYMBOLS

- Power Pole
- Telephone Pole
- Joint Use Pole
- Telephone Pedestal — TEL PED
- Utility Line by Others (Type as Shown) — PROP O/H POW LINES
- Trenchless Installation — 12" TL INSTALL
- Encasement by Open Cut — 24" ENCAS BY OC
- Encasement — 24" ENCASEMENT
- Thrust Block
- Air Release Valve — AR
- Utility Vault — UV
- Concrete Pier — CP
- Steel Pier — SP
- Plan Note — NOTE
- Pay Item Note — PAY ITEM

EXISTING UTILITIES SYMBOLS

- Power Pole
- Telephone Pole
- Joint Use Pole
- Utility Pole
- Utility Pole with Base
- H-Frame Pole
- Power Transmission Line Tower
- Water Manhole
- Power Manhole
- Telephone Manhole
- Sanitary Sewer Manhole
- Hand Hole for Cable
- Power Transformer
- Telephone Pedestal
- CATV Pedestal
- Gas Valve
- Gas Meter
- Located Miscellaneous Utility Object
- Abandoned According to Utility Records — AATUR
- End of Information — E.O.I.
- *Underground Power Line — P
- *Underground Telephone Cable — T
- *Underground Telephone Conduit — TC
- *Underground Fiber Optics Telephone Cable — T FO
- *Underground TV Cable — TV
- *Underground Fiber Optics TV Cable — TV FO
- *Underground Gas Pipeline — G
- Aboveground Gas Pipeline — A/G Gas
- *Underground Water Line — W
- Aboveground Water Line — A/G Water
- *Underground Gravity Sanitary Sewer Line — SS
- Aboveground Gravity Sanitary Sewer Line — A/G Sanitary Sewer
- *Underground SS Forced Main Line — FSS
- Underground Unknown Utility Line — ?UTL
- SUE Test Hole
- Water Meter
- Water Valve
- Fire Hydrant
- Sanitary Sewer Cleanout

*For Existing Utilities

- Utility Line Drawn from Record (Type as Shown) — W
- Designated Utility Line (Type as Shown) — W

REV: 2/1/2012

ln_SEP1_BP2_UC2.dgn 1:25
JAN-07-2021 13:03
$$$$USERNAME$$$$
$$$$(Design\Utilities\Engineering\UC\Proj\BP2.R001.1_Ut_sym_UC2_psh.dgn

DocuSign Envelope ID: D8F91F64-98A9-4836-BA35-742D06ED4010

UTILITY CONSTRUCTION

HINDE ENGINEERING
License No. C-2639
401 Harrison Oaks Blvd., Suite 220 Cary, NC 27513

DOCUMENT NOT CONSIDERED FINAL UNLESS ALL SIGNATURES COMPLETED

PROJECT REFERENCE NO.	SHEET NO.
BP2.R001.1	UC-3
DESIGNED BY: JKC	
DRAWN BY: JNA	
CHECKED BY: JKC	
APPROVED BY: CLS	
REVISED:	
NORTH CAROLINA DEPARTMENT OF TRANSPORTATION	
UTILITIES ENGINEERING SEC. PHONE:(919)707-6690 FAX:(919)250-4151	1/30/2023 UTILITY CONSTRUCTION PLANS ONLY

DocuSigned by: Clint L. Stevens 9D6132D777EB42D...

NORTH CAROLINA PROFESSIONAL SEAL 040370 ENGINEER CLINT L. STEVENS

UTILITY CONSTRUCTION

GENERAL NOTES:

1. THE PROPOSED UTILITY CONSTRUCTION SHALL MEET THE APPLICABLE REQUIREMENTS OF THE NC DEPARTMENT OF TRANSPORTATION'S "STANDARD SPECIFICATIONS FOR ROADS AND STRUCTURES" DATED JANUARY 2018.

2. THE EXISTING UTILITIES BELONG TO CRAVEN COUNTY. THE CONTACT PERSON IS:

ELLIOT THOMAS
ASSISTANT SUPERINTENDENT
252-636-6615

IN THE EVENT OF A CONFLICT BETWEEN THE UTILITY OWNER'S TECHNICAL SPECIFICATIONS AND NCDOT STANDARD SPECIFICATIONS/PROJECT SPECIAL PROVISIONS, THE MOST STRINGENT SHALL GOVERN.

3. ALL WATER LINES TO BE INSTALLED WITHIN COMPLIANCE OF THE RULES AND REGULATIONS OF THE NORTH CAROLINA DEPARTMENT OF ENVIRONMENTAL QUALITY, DIVISION OF WATER RESOURCES, PUBLIC WATER SUPPLY SECTION. ALL SEWER LINES TO BE INSTALLED WITHIN COMPLIANCE OF THE RULES AND REGULATIONS OF THE NORTH CAROLINA DEPARTMENT OF ENVIRONMENT QUALITY, DIVISION OF WATER RESOURCES, WATER QUALITY SECTION. PERFORM ALL WORK IN ACCORDANCE WITH THE APPLICABLE PLUMBING CODES.

4. THE UTILITY OWNER OWNS THE EXISTING UTILITY FACILITIES AND WILL OWN THE NEW UTILITY FACILITIES AFTER ACCEPTANCE BY THE DEPARTMENT. THE DEPARTMENT OWNS THE CONSTRUCTION CONTRACT AND HAS ADMINISTRATIVE AUTHORITY. COMMUNICATIONS AND DECISIONS BETWEEN THE CONTRACTOR AND UTILITY OWNER ARE NOT BINDING UPON THE DEPARTMENT OR THIS CONTRACT UNLESS AUTHORIZED BY THE ENGINEER. AGREEMENTS BETWEEN THE UTILITY OWNER AND CONTRACTOR FOR THE WORK THAT IS NOT PART OF THIS CONTRACT OR IS SECONDARY TO THIS CONTRACT ARE ALLOWED, BUT ARE NOT BINDING UPON THE DEPARTMENT.

5. PROVIDE ACCESS FOR THE DEPARTMENT PERSONNEL AND THE OWNER'S REPRESENTATIVES TO ALL PHASES OF CONSTRUCTION. NOTIFY DEPARTMENT PERSONNEL AND THE UTILITY OWNER TWO WEEKS PRIOR TO COMMENCEMENT OF ANY WORK AND ONE WEEK PRIOR TO SERVICE INTERRUPTION. KEEP UTILITY OWNERS' REPRESENTATIVES INFORMED OF WORK PROGRESS AND PROVIDE OPPORTUNITY FOR INSPECTION OF CONSTRUCTION AND TESTING.

6. THE PLANS DEPICT THE BEST AVAILABLE INFORMATION FOR THE LOCATION, SIZE, AND TYPE OF MATERIAL FOR ALL EXISTING UTILITIES. MAKE INVESTIGATIONS FOR DETERMINING THE EXACT LOCATION, SIZE, AND TYPE MATERIAL OF THE EXISTING FACILITIES AS NECESSARY FOR THE CONSTRUCTION OF THE PROPOSED UTILITIES AND FOR AVOIDING DAMAGE TO EXISTING FACILITIES. REPAIR ANY DAMAGE INCURRED TO EXISTING FACILITIES TO THE ORIGINAL OR BETTER CONDITION AT NO ADDITIONAL COST TO THE DEPARTMENT.

7. MAKE FINAL CONNECTIONS OF THE NEW WORK TO THE EXISTING SYSTEM WHERE INDICATED ON THE PLANS, AS REQUIRED TO FIT THE ACTUAL CONDITIONS, OR AS DIRECTED.

8. MAKE CONNECTIONS BETWEEN EXISTING AND PROPOSED UTILITIES AT TIMES MOST CONVENIENT TO THE PUBLIC, WITHOUT ENDANGERING THE UTILITY SERVICE, AND IN ACCORDANCE WITH THE UTILITY OWNER'S REQUIREMENTS. MAKE CONNECTIONS ON WEEKENDS, AT NIGHT, AND ON HOLIDAYS IF NECESSARY.

9. ALL UTILITY MATERIALS SHALL BE APPROVED PRIOR TO DELIVERY TO THE PROJECT. SEE 1500-7, " SUBMITTALS AND RECORDS" IN SECTION 1500 OF THE STANDARD SPECIFICATIONS.

10. ALL WATER LINE INSTALLED ON THIS PROJECT SHALL MEET THE REQUIREMENTS OF THE RULES GOVERNING PUBLIC WATER SYSTEMS. VERTICAL SEPARATION BETWEEN PROPOSED WATER MAINS AND STORM DRAINAGE SHALL BE A MINIMUM OF 18-INCHES PER RECOMMENDED STANDARDS OF WATER WORKS. ALL PROPOSED WATER LINE SHALL HAVE A MINIMUM COVER OF 36-INCHES. PROPOSED WATER MAINS SHALL HAVE A MINIMUM HORIZONTAL SEPARATION OF 10-FEET FROM SEWER MAINS (REF. RULE .0904, RULE.0906). UTILITIES BEING RELOCATED OR INSTALLED AS SHOWN ON THE UTILITY CONSTRUCTION PLANS MUST BE ADJUSTED ACCORDINGLY TO MEET THESE CRITERIA.

PROJECT SPECIFIC NOTES:

1. CONTRACTOR'S ATTENTION IS DIRECTED TO SECTIONS 102, 107, AND 1550 OF THE STANDARD SPECIFICATIONS CONCERNING TRENCHLESS INSTALLATION. IT IS CONTRACTOR'S RESPONSIBILITY TO HAVE BORE DESIGNED AND SEALED BY A LICENSED NORTH CAROLINA PROFESSIONAL ENGINEER. NO DAMAGE IS ALLOWED TO RIVER, WETLANDS, OR BUFFER ZONES.

2. ALL PIPE SHALL BE RESTRAINED BY USE OF MEGALUG RESTRAINTS OR APPROVED EQUAL.

25-JAN-2023 15:20
$$$$ C:\Users\ $$$$ PROJECTS\2021\A2021801.00.SEP1.BP2-R001-1.(B-4483)\Design\Utilities\Engineering\UC\Proj\BP2.R001.1.Ut_notes.UC3.psh.dgn
$$$$ CERNAVE $$$$

DocuSign Envelope ID: 4C6E03E5-C3FF-437C-AB21-581406CD7FD3

NOT TO SCALE

PROJECT DETAILS

HINDE ENGINEERING
License No. C-2839
401 Harrison Oaks Blvd., Suite 220 Cary, NC 27513

DOCUMENT NOT CONSIDERED FINAL UNLESS ALL SIGNATURES COMPLETED

PROJECT REFERENCE NO.	SHEET NO.
BP2.R002.1	UC-3A

DESIGNED BY: JKC
DRAWN BY: JNA
CHECKED BY: JKC
APPROVED BY: CLS
REVISED:

NORTH CAROLINA DEPARTMENT OF TRANSPORTATION

UTILITIES ENGINEERING SEC.
PHONE:(919)707-6690
FAX:(919)250-4151

NORTH CAROLINA PROFESSIONAL ENGINEER SEAL 040370 CLINT L. STEVENS

DocuSigned by: Clint L. Stevens
9D6F32D777EB42D...
1/30/2023

UTILITY CONSTRUCTION PLANS ONLY

UTILITY CONSTRUCTION

TRENCH DETAIL

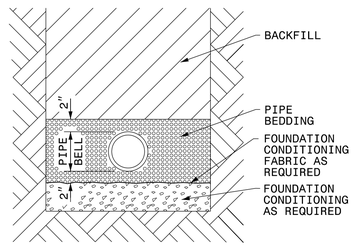

PLACE FOUNDATION CONDITIONING MATERIAL BELOW BEDDING IF REQUIRED, AS DIRECTED BY ENGINEER. PIPE BEDDED IN SELECT MATERIAL, CLASS II (TYPE 1) OR CLASS III. TRENCH BACKFILLED IN LOOSE 6" LAYERS COMPACTED TO TOP OF TRENCH USING LOCAL EXCAVATED MATERIAL IF APPROVED BY THE ENGINEER, OR SELECT MATERIAL. ALL MATERIAL SHALL BE FREE OF ROCKS, FOREIGN MATERIAL, AND FROZEN EARTH. COMPACTION SHALL BE TO APPROXIMATELY 95% DENSITY IN ACCORDANCE WITH AASHTO T-99 AS MODIFIED BY THE DEPARTMENT OF TRANSPORTATION.

MAXIMUM TRENCH WIDTH AT TOP OF PIPE

NOMINAL PIPE SIZE (INCHES)	TRENCH WIDTH (INCHES)	NOMINAL PIPE SIZE (INCHES)	TRENCH WIDTH (INCHES)
4	28	20	44
6	30	24	48
8	32	30	54
10	34	36	60
12	36	42	66
14	38	48	72
16	40	54	78
18	42		

L-JAN-2023 13:25
S:\Proof Files\PROJECTS\2021\A2021801.00_SEPI_BP2-R001-1_(B-4483)\Design\Utilities\Engineering\UC\Proj\BP2.R001.1.Ut_dtl_UC3A_psh.dgn
$$$$USERNAME$$$$

DocuSign Envelope ID: A255BCE0-E69F-41ED-A6C8-EEA2B5428BC4

HINDE ENGINEERING
License No. C-2639
401 Harrison Oaks Blvd., Suite 220 Cary, NC 27513

DOCUMENT NOT CONSIDERED FINAL UNLESS ALL SIGNATURES COMPLETED

PROJECT REFERENCE NO.	SHEET NO.
BP2.R001.1	UC-4
DESIGNED BY: JKC	
DRAWN BY: JNA	
CHECKED BY: JKC	
APPROVED BY: CLS	
REVISED:	
NORTH CAROLINA DEPARTMENT OF TRANSPORTATION	
UTILITIES ENGINEERING SEC. PHONE:(919)707-6690 FAX:(919)250-4151	UTILITY CONSTRUCTION PLANS ONLY

DocuSigned by: Clint L. Stevens 9D6F32D777EB42D
NORTH CAROLINA PROFESSIONAL SEAL 040370 ENGINEER CLINT L. STEVENS 1/30/2023

UTILITY CONSTRUCTION

NAD 83/NA 2011

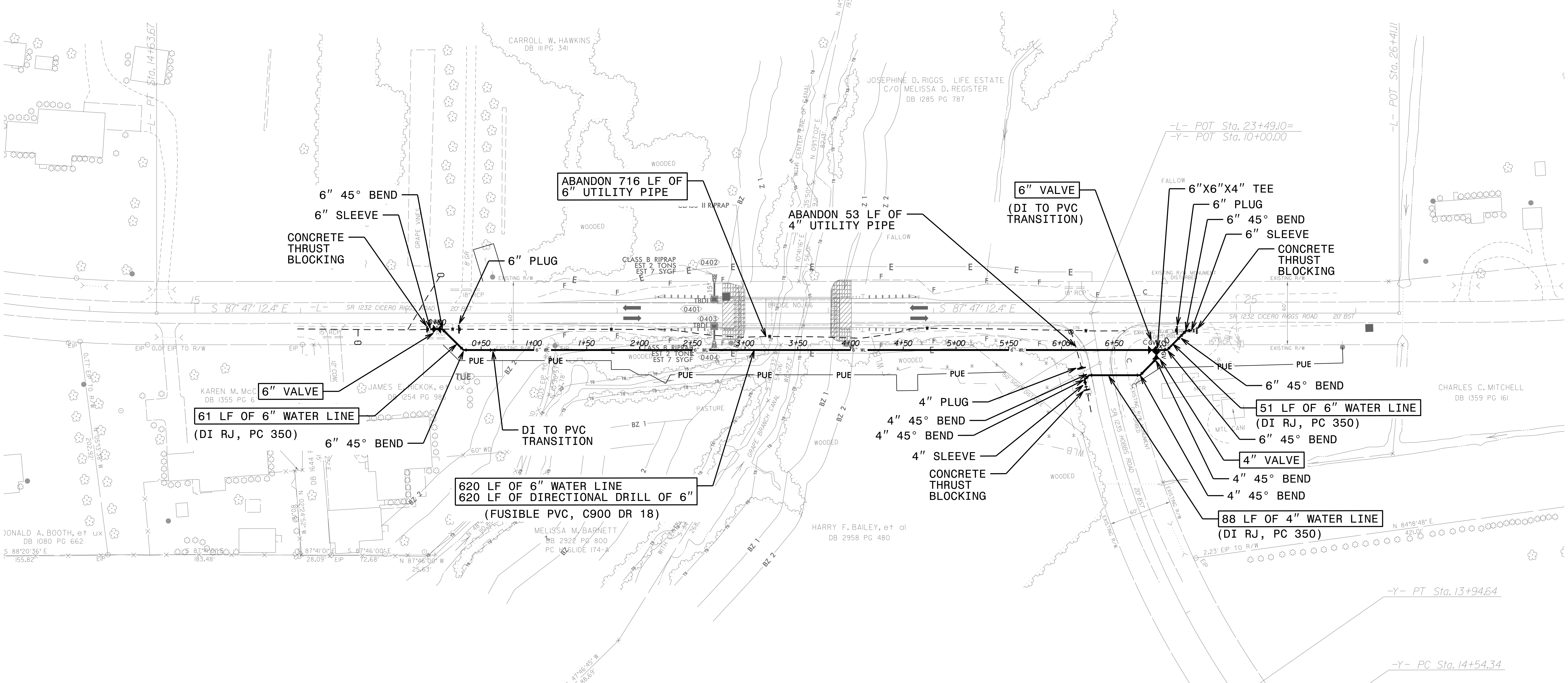

NOTE:
THE ESTIMATED QUANTITY OF DUCTILE IRON WATER PIPE FITTINGS ON THIS PLAN SHEET IS 1060 POUNDS. THE ACTUAL QUANTITY AND TYPE OF FITTINGS WILL VARY BASED ON FIELD CONDITIONS.

26-JAN-2023 15:20
\\Hinde.local\shares\Server Files\PROJECTS\2021\A202180l.00_SEPI_BP2-R001-1_(B-4483)\Design\Utilities\Engineering\UC\Proj\BP2.R001.1_Ut_rdy4_UC4_psh.dgn
$$$$USERNAME$$$$

DocuSign Envelope ID: 7407AD81-1476-4F2F-9B06-D28E1D0BC902

HINDE ENGINEERING
License No. C-2839
401 Harrison Oaks Blvd., Suite 220 Cary, NC 27513

DOCUMENT NOT CONSIDERED FINAL UNLESS ALL SIGNATURES COMPLETED

PROJECT REFERENCE NO.	SHEET NO.
BP2.R001.1	UC-5
DESIGNED BY: JKC	
DRAWN BY: JNA	
CHECKED BY: JKC	
APPROVED BY: CLS	
REVISED:	
NORTH CAROLINA DEPARTMENT OF TRANSPORTATION	
UTILITIES ENGINEERING SEC. PHONE:(919)707-6690 FAX:(919)250-4151	UTILITY CONSTRUCTION PLANS ONLY

DocuSigned by: Clint L. Stevens
9D6F32D777EB42D...
1/30/2023

UTILITY CONSTRUCTION

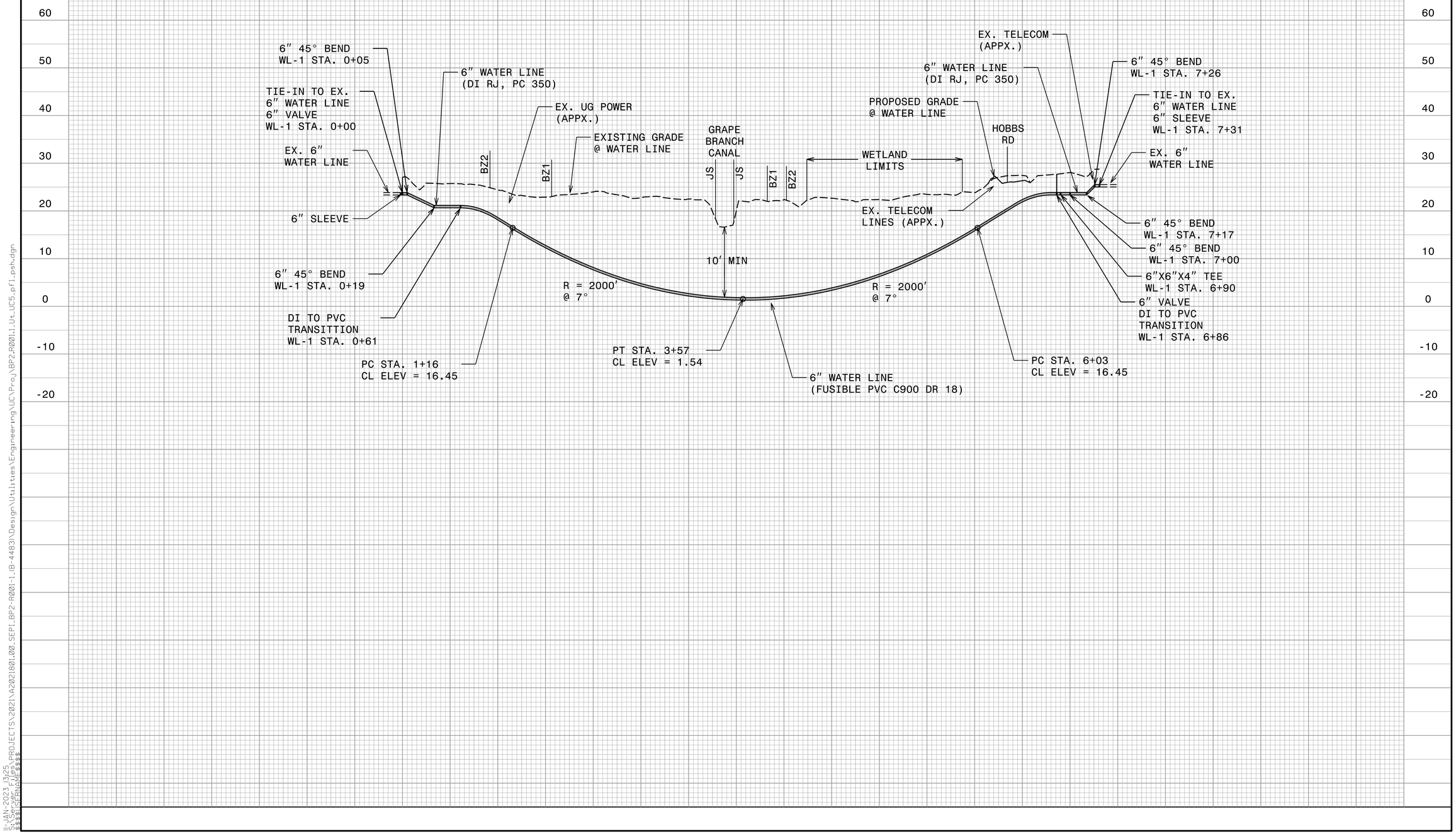

11-JAN-2023 13:25
$$$$USERNAME$$$$ C:\Users\PROJECTS\2021\A2021801.00_SEPI_BP2-R001-1_(B-4483)\Design\Utilities\Engineering\UC\Proj\BP2.R001.1.Ut_UC5_pfl_psh.dgn

TIP PROJECT: BP2.R001.1

T.I.P. NO.	SHEET NO.
BP2.R001.1	UO–1

NOTE:
ALL UTILITY WORK SHOWN ON THIS SHEET IS DONE BY OTHERS.
NO PAYMENT WILL BE MADE TO THE CONTRACTOR FOR UTILITY WORK SHOWN ON THIS SHEET.

STATE OF NORTH CAROLINA
DIVISION OF HIGHWAYS

UTILITIES BY OTHERS PLANS
CRAVEN COUNTY

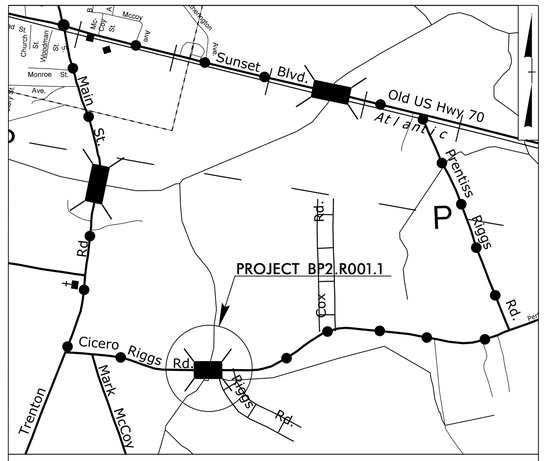

VICINITY MAP

DETOUR ROUTE

LOCATION: BRIDGE NO.66 ON SR 1232 (CICERO RIGGS RD) OVER GRAPE CREEK

TYPE OF WORK: UTILILIES BY OTHERS RELOCATIONS

(UO–2)

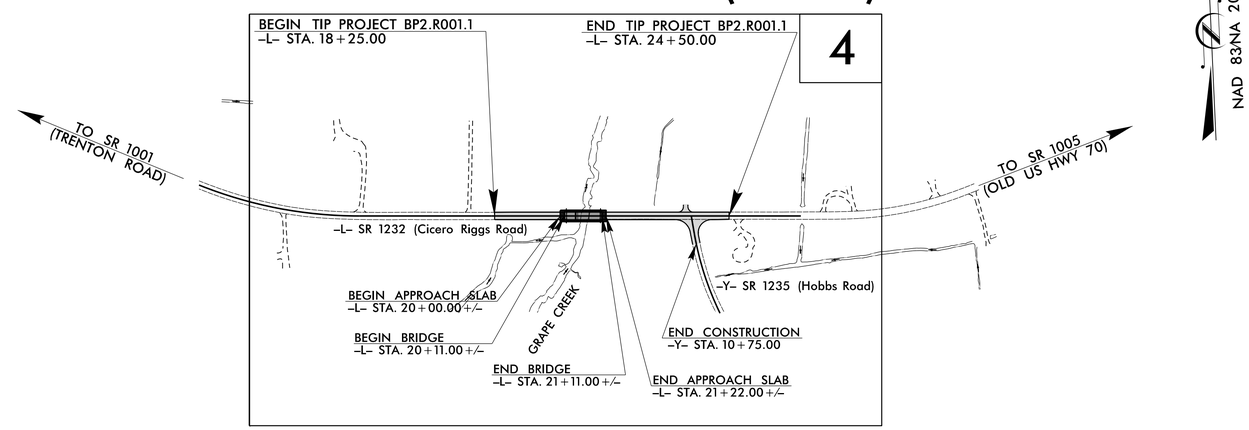

GRAPHIC SCALES

50 25 0 50 100
PLANS

50 25 0 50 100
PROFILE (HORIZONTAL)

10 5 0 10 20
PROFILE (VERTICAL)

INDEX OF SHEETS

SHEET NO.	DESCRIPTION
UO–1	TITLE SHEET
UO–2	UBO PLAN SHEET

UTILITY OWNERS WITH CONFLICTS

(A) POWER – DUKE ENERGY
(B) TELECOM – CENTURYLINK

PREPARED IN THE OFFICE OF:

HINDE ENGINEERING
License No. C-2639
401 Harrison Oaks Blvd., Suite 220 Cary, NC 27513
(919)-653-0001

Clint L. Stevens, P.E. — UTILITY COORDINATION PROJECT MANAGER
Harris S. Winters — PROJECT UTILITY COORDINATOR
Jordan K. Chapman — PROJECT UTILITY DESIGNER

DIVISION OF HIGHWAYS
DIVISION 2
2815 ROUSE ROAD EXTENSION
KINSTON NC 28504
PHONE (252) 775-6100
FAX (252) 208-7862

Jeff Cabaniss, P.E. — DIVISION ENGINEER
Cadmus Capehart, P.E. — DIVISION CONSTRUCTION ENGR

10-OCT-2022 13:19
\\Hinde-local\Shares\Server Files\PROJECTS\2021\A202180L00_SEPI_BP2-R001-L_(B-4483)\Design\Utilities\Engineering\UBO\Proj\BP2.R001_UT_tsh_UOL_psh.dgn
$$$$USERNAME$$$$

PROJECT REFERENCE NO.	SHEET NO.
BP2.R001.1	U0-2
THIS SHEET CORRESPONDS TO RDY-4	

UTILITIES BY OTHERS

NOTE:
ALL UTILITY WORK SHOWN ON THIS SHEET WILL BE DONE BY OTHERS. NO PAYMENT WILL BE MADE TO THE CONTRACTOR FOR UTILITY WORK SHOWN ON THIS SHEET.

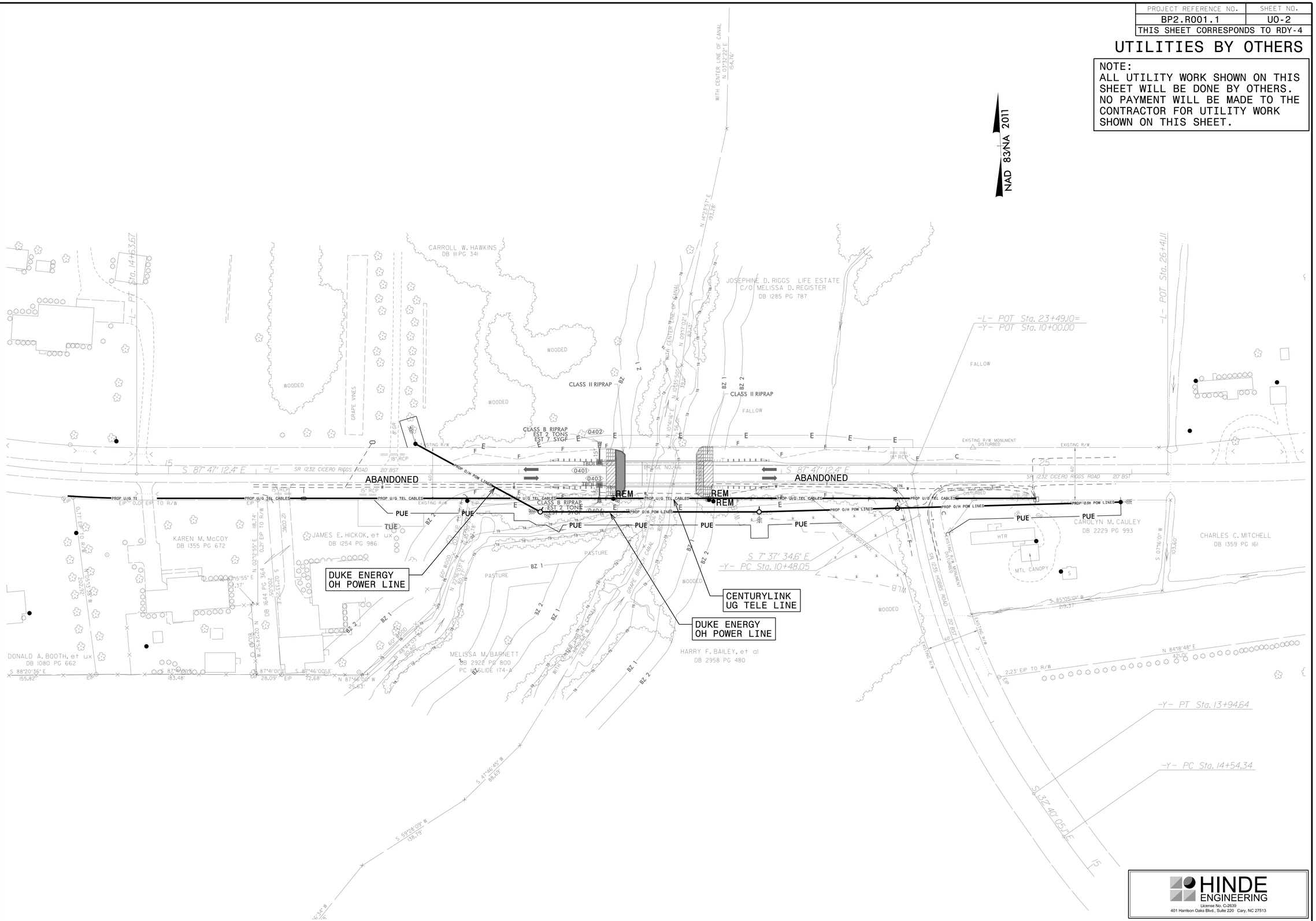

HINDE ENGINEERING
License No. C-2639
401 Harrison Oaks Blvd., Suite 220 Cary, NC 27513

10-OCT-2022 13:19
\\hinde-fs\shares\Server Files\PROJECTS\2021\A2021801.00_SEPI_BP2-R001-1_(B-4483)\Design\Utilities\Engineering\UBO\Proj\BP2.R001.1.Ut_rdy4_U02_psh.dgn

PROJECT REFERENCE NO.	SHEET NO.
BP2.R001	X-1

STATE OF NORTH CAROLINA
DIVISION OF HIGHWAYS

BP2.R001
CROSS SECTION INDEX OF SHEETS

ALIGNMENT AND STATIONING	SHEET NUMBERS
-L- STA. 17+00.00 TO STA. 26+00.00	X-2 TO X-5
-Y- STA. 10+00.00 TO STA. 11+00.00	X-6

3/13/2023
BP2.R001_Rdy_xsc_Index.dgn
jlsHigginsdner

STATE OF NORTH CAROLINA
DIVISION OF HIGHWAYS

PROJ. REFERENCE NO.	SHEET NO.
BP2.R001	X-1A

Approximate quantities only. Unclassified excavation, borrow excavation, fine grading, clearing and grubbing, and removal of existing pavement will be paid for at the lump sum price for "Grading".

NOTE: EMBANKMENT COLUMN DOES NOT INCLUDE BACKFILL FOR UNDERCUT

CROSS-SECTION SUMMARY

Station L	Uncl. Exc. (cu. yd.)	Embt (cu. yd.)	UnderCut (cu. yd.)
18+25.00	0	0	0
18+50.00	1	2	0
19+00.00	5	7	0
19+50.00	3	17	0
20+00.00	6	48	0
20+09.81	2	12	0

Station L	Uncl. Exc. (cu. yd.)	Embt (cu. yd.)	UnderCut (cu. yd.)
21+12.19	0	0	0
21+50.00	0	78	0
22+00.00	0	65	0
22+50.00	0	32	0
23+00.00	0	37	0
23+50.00	1	19	0
24+00.00	7	0	0
24+50.00	7	0	0

Station Y	Uncl. Exc. (cu. yd.)	Embt (cu. yd.)	UnderCut (cu. yd.)
10+10.15	0	0	0
10+25.00	8	1	0
10+50.00	8	2	0
10+75.00	4	1	0

0 2.5 5	PROJ. REFERENCE NO.	SHEET NO.
	BP2.R001	X-2

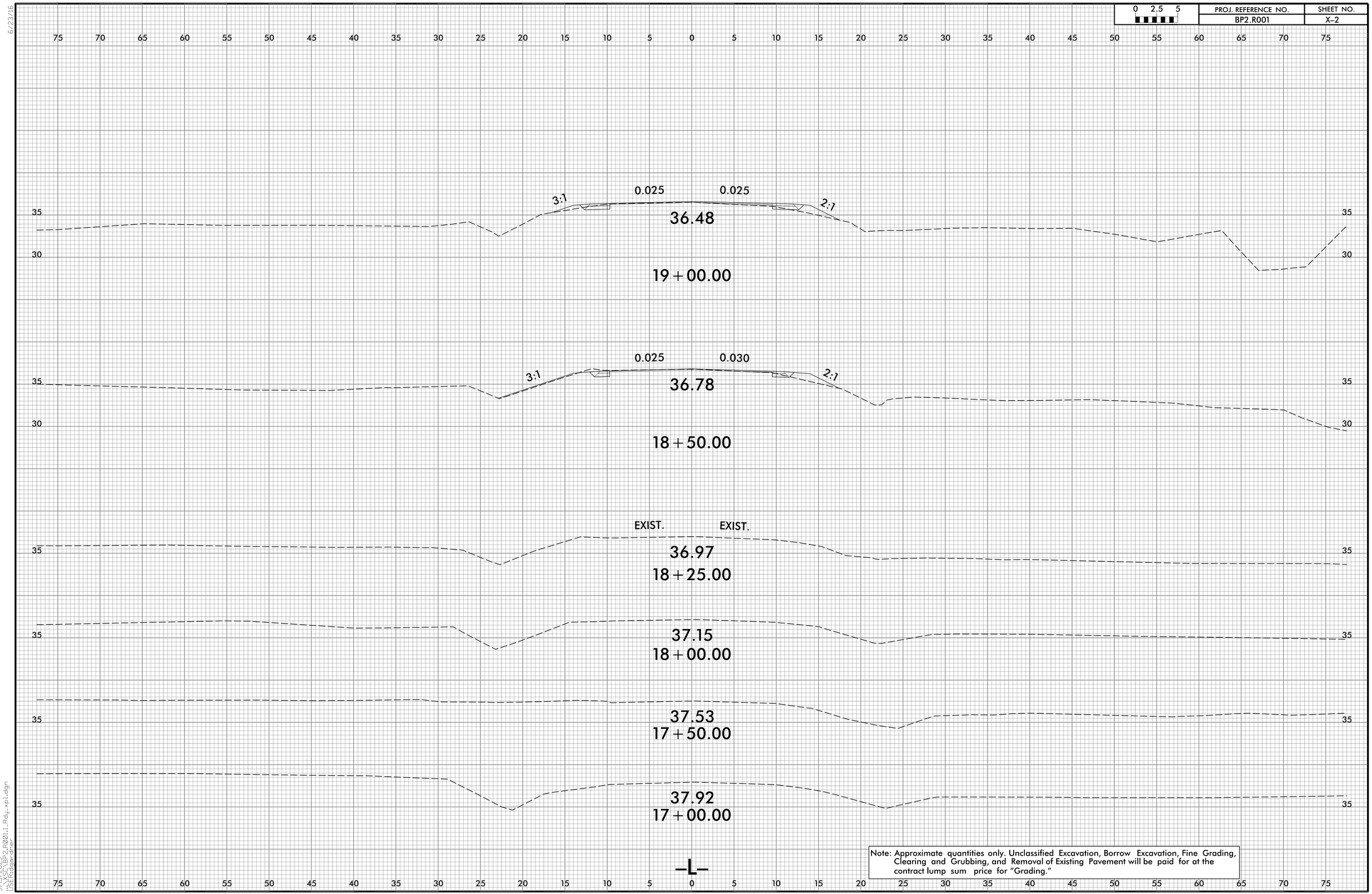

Note: Approximate quantities only. Unclassified Excavation, Borrow Excavation, Fine Grading, Clearing and Grubbing, and Removal of Existing Pavement will be paid for at the contract lump sum price for "Grading."

6/23/16

3/13/2023
...\XSC\BP2.R001.1 Rdy xpl.dgn
USER:Radar-Gner

0 2.5 5	PROJ. REFERENCE NO.	SHEET NO.
	BP2.R001	X-3

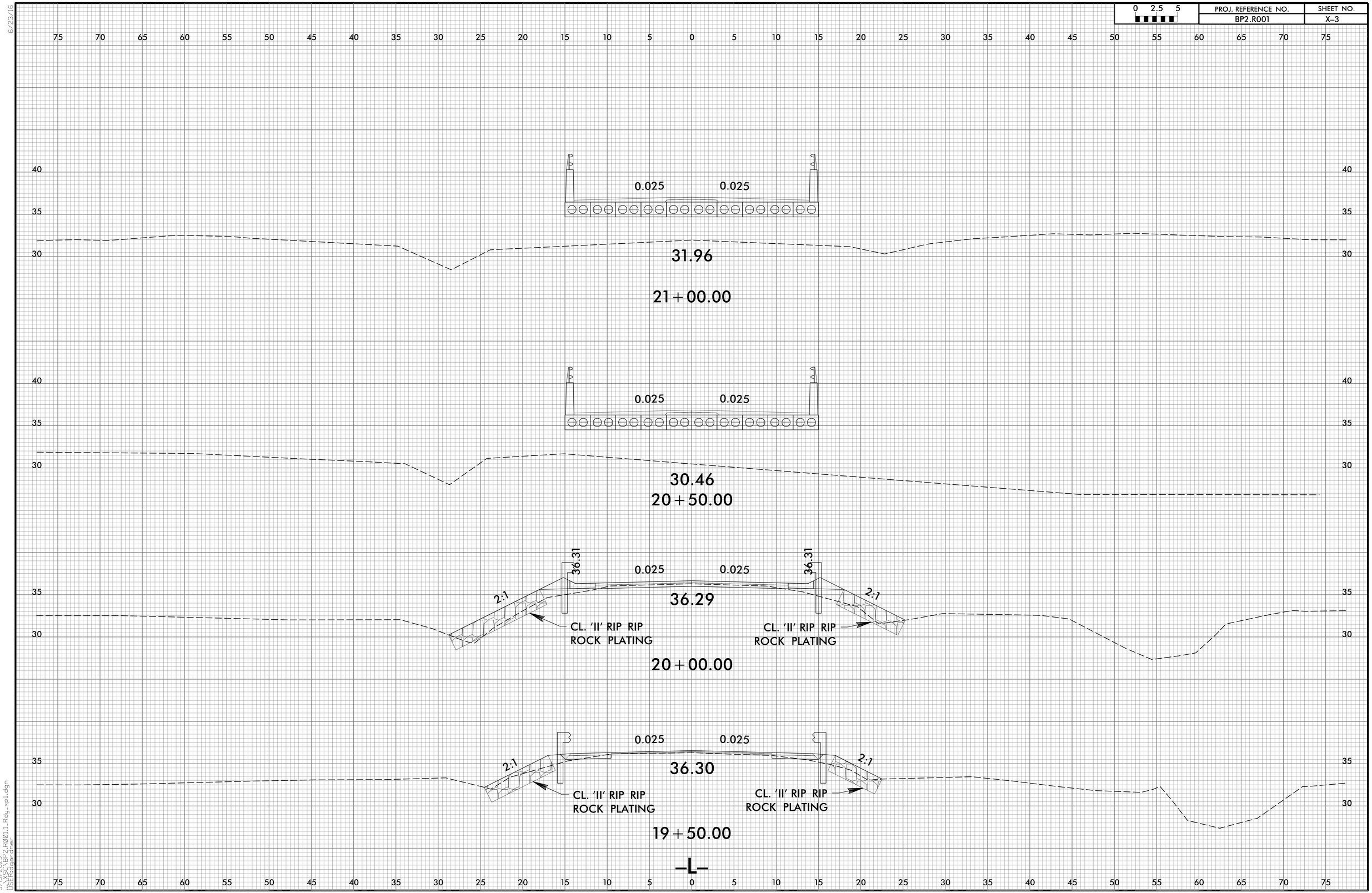

6/23/16

3/13/2023
:\XSC\BP2.R001.1.Rdy.xpl.dgn
USER:edgardner

0 2.5 5	PROJ. REFERENCE NO.	SHEET NO.
	BP2.R001	X-4

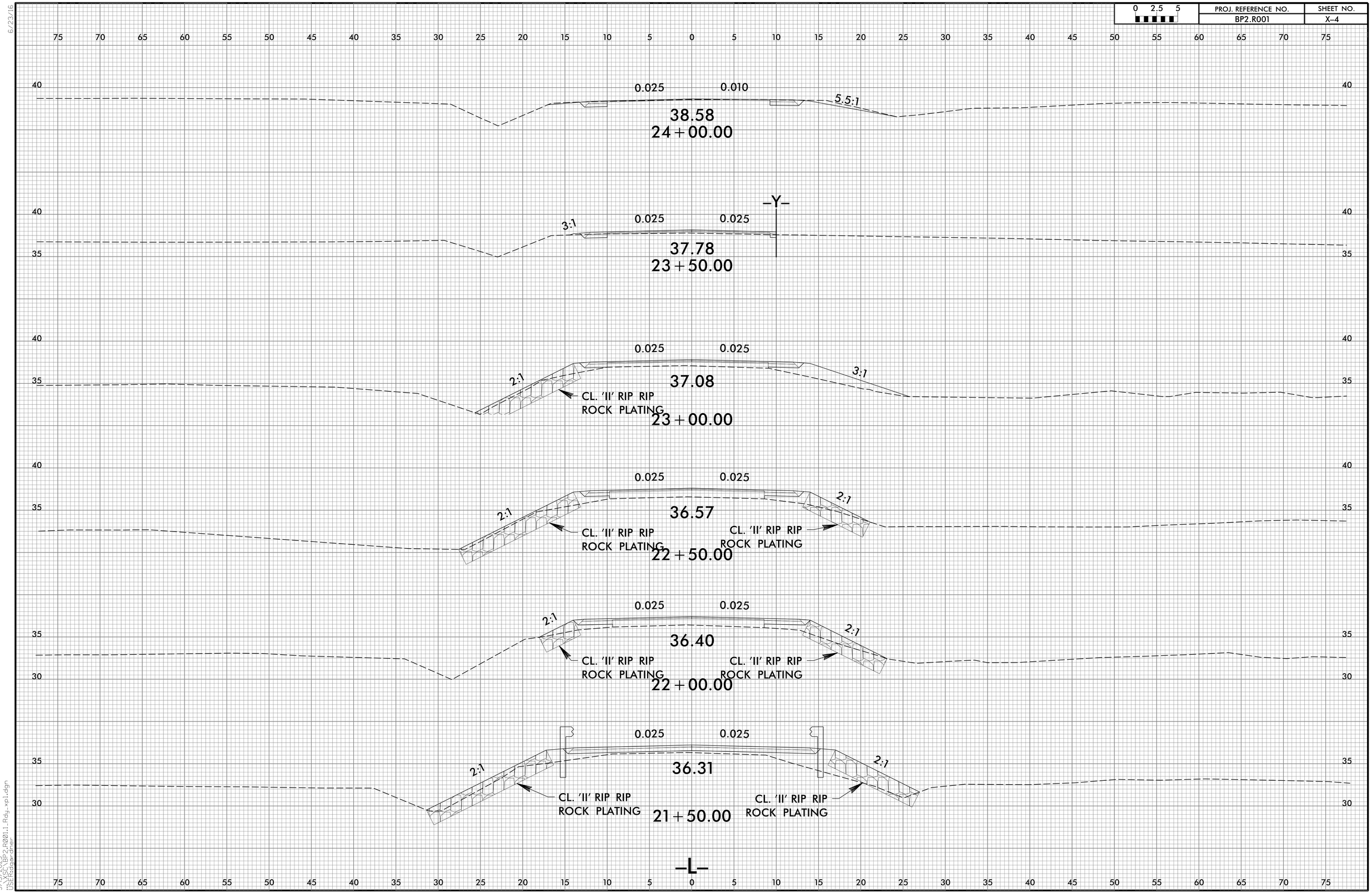

6/23/16

3/13/2023
:\XSC\BP2.R001.1_Rdy_xpl.dgn
USER:dgardner

6/23/16

0 2.5 5	PROJ. REFERENCE NO.	SHEET NO.
	BP2.R001	X-5

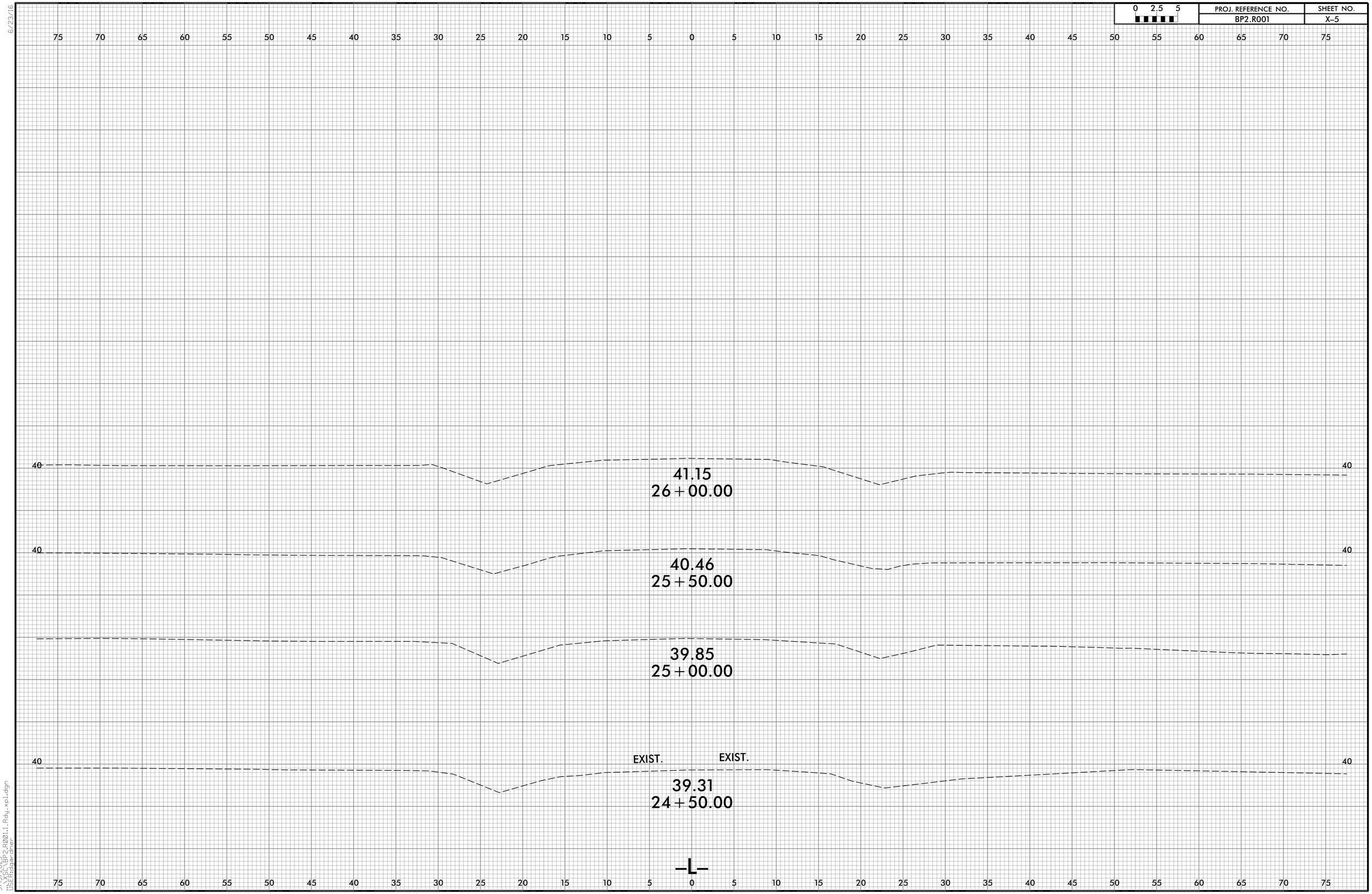

3/13/2023
:\XSC\BP2.R001.1_Rdy_xpl.dgn
USER:dgardner

0 2.5 5	PROJ. REFERENCE NO.	SHEET NO.
	BP2.R001	X-6

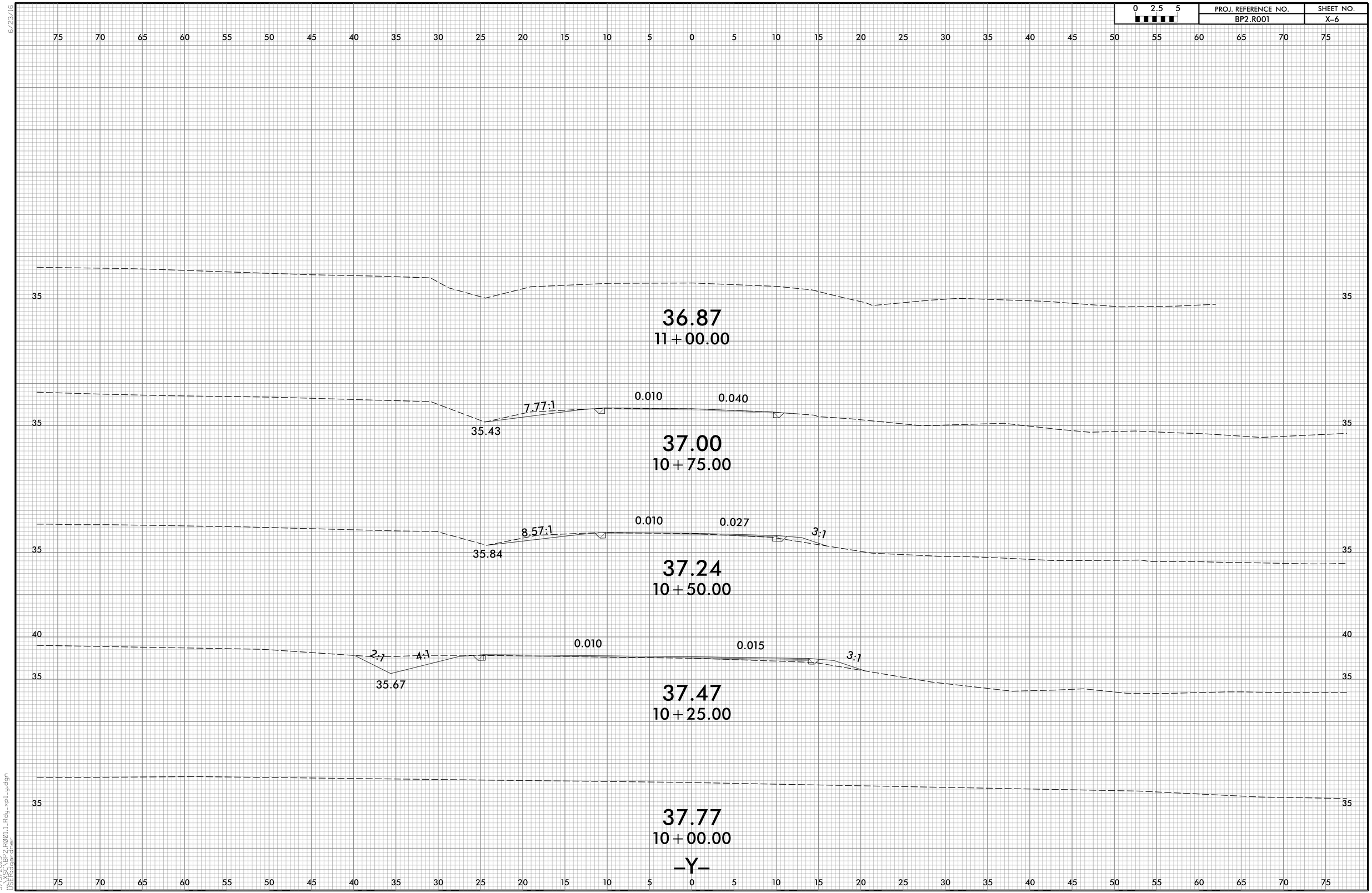

6/23/16

3/13/2023
...\SC\BP2.R001.1.Rdy.xpl.y.dgn
USER:Edgar.Gner

DocuSign Envelope ID: E4A23A6E-0A83-4B90-BC13-B7CF7F588565

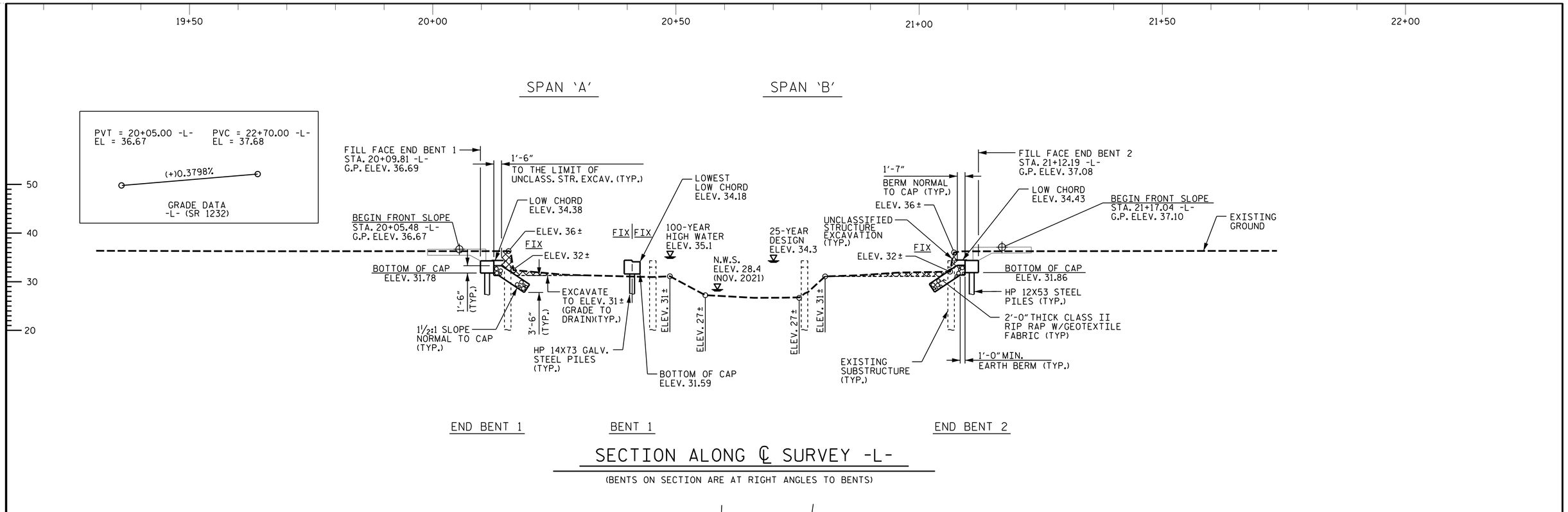

SECTION ALONG ℄ SURVEY -L-

(BENTS ON SECTION ARE AT RIGHT ANGLES TO BENTS)

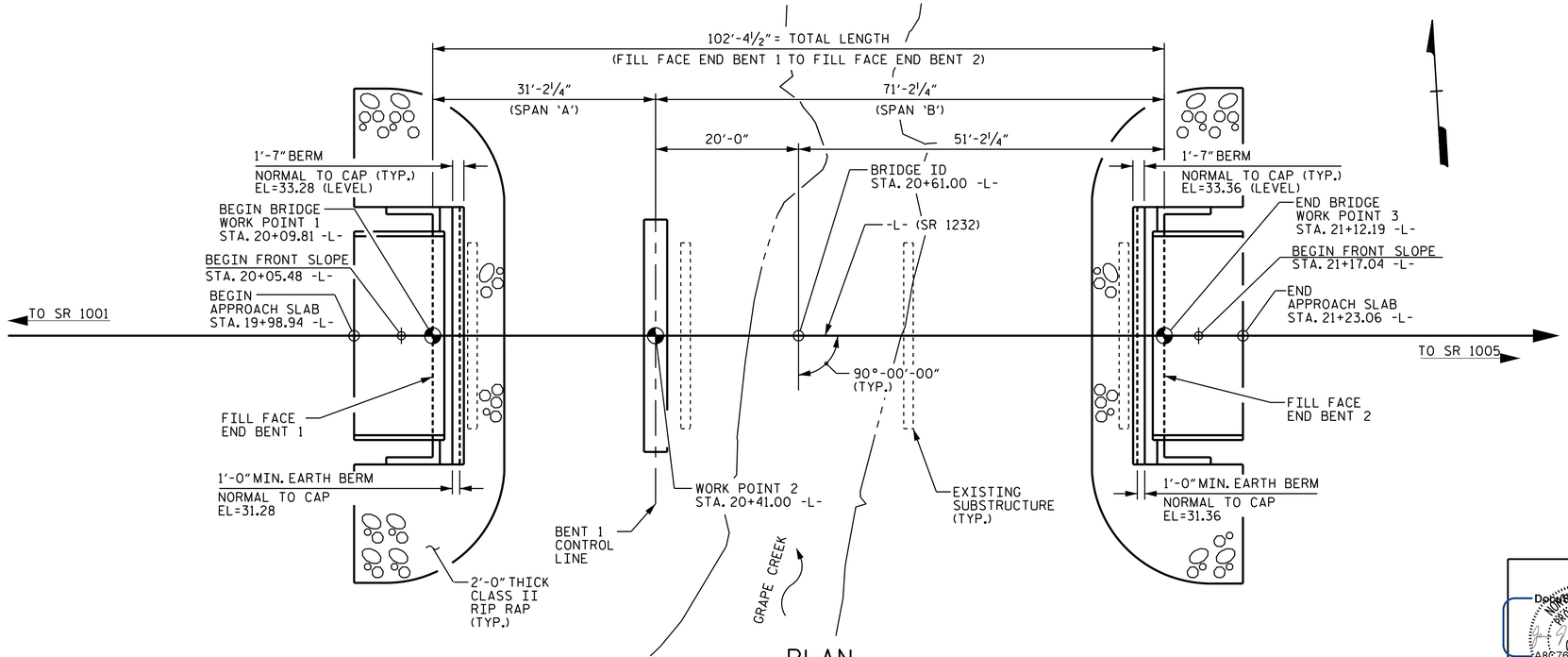

PLAN

(PILES NOT SHOWN FOR CLARITY)

DRAWN BY : CT STONE 5/10/22
CHECKED BY : T. G. ZEBLO 5/10/22
ENGINEER OF RECORD : JAMES J. BARCOMB

DocuSigned by:
A8C76487F8048C...
10/13/2022

NORTH CAROLINA PROFESSIONAL SEAL 022997 ENGINEER JAMES J. BARCOMB

DOCUMENT NOT CONSIDERED FINAL UNLESS ALL SIGNATURES COMPLETED

PLAN PREPARED BY:

ALPHA & OMEGA GROUP
CIVIL | STRUCTURAL | WATER RESOURCES

ALPHA AND OMEGA GROUP, PC
4601 LAKE BOONE TRAIL, SUITE 3C, RALEIGH, NC 27607
Firm License No. C-1684 www.aogroup.com
PROJECT NO. : 2021.058

PROJECT NO. BP2.R001.1
CRAVEN COUNTY
STATION: 20+61.00 -L-

SHEET 1 OF 4 REPLACES BRIDGE NO. 66

STATE OF NORTH CAROLINA
DEPARTMENT OF TRANSPORTATION
RALEIGH

GENERAL DRAWING
BRIDGE ON SR 1232
OVER GRAPE CREEK
BETWEEN SR 1001 & SR 1005
27'-6" CLEAR ROADWAY - 90° SKEW

REVISIONS						SHEET NO.
NO.	BY:	DATE:	NO.	BY:	DATE:	S-1
1			3			TOTAL SHEETS
2			4			25

DocuSign Envelope ID: 4F0C3925-8920-4E5D-9B45-C84F7DD33A94

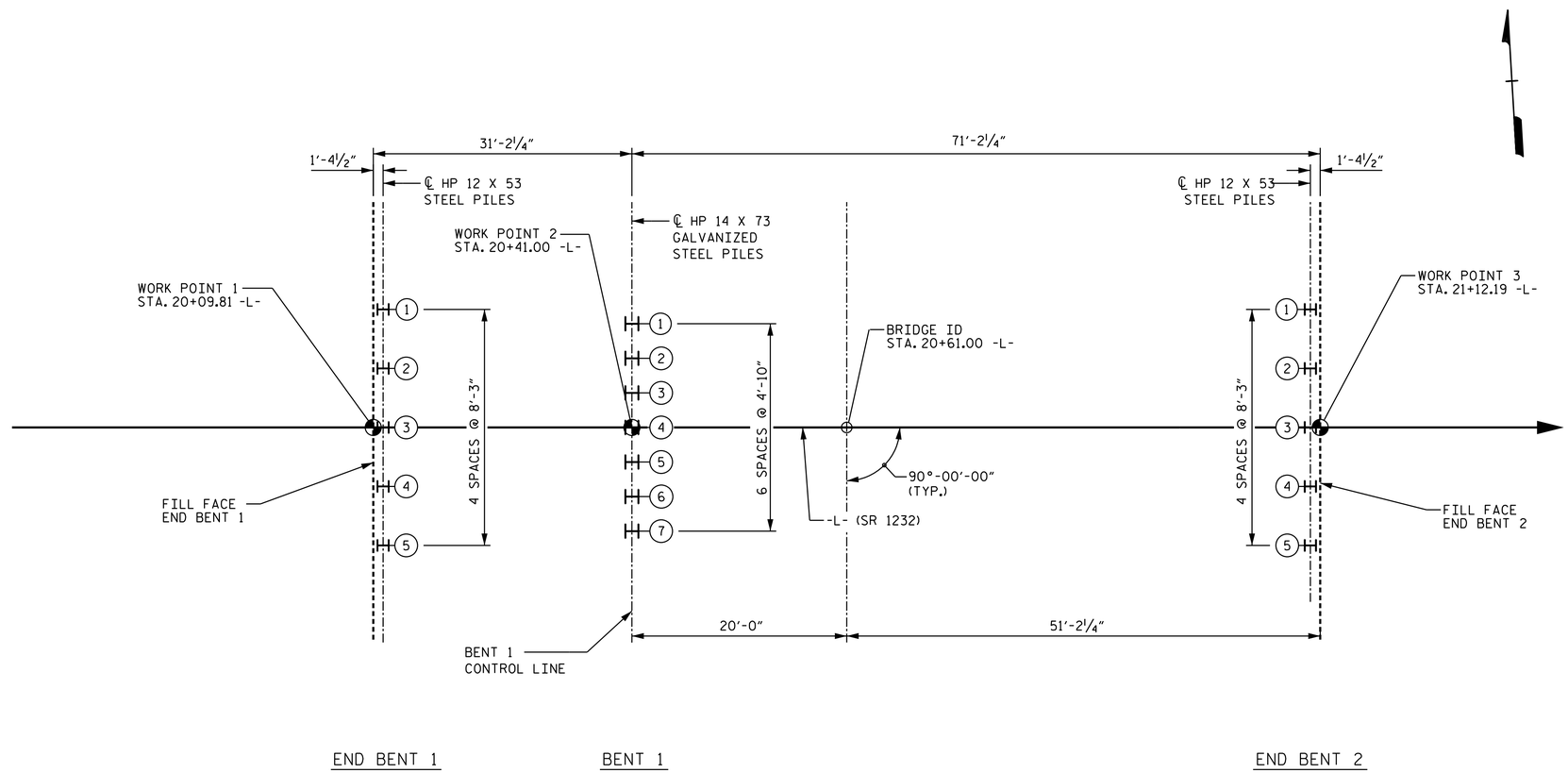

FOUNDATION LAYOUT PLAN

(NOTE: ALL PILES ARE VERTICAL)

PLAN PREPARED BY:

ALPHA & OMEGA GROUP
CIVIL | STRUCTURAL | WATER RESOURCES

ALPHA AND OMEGA GROUP, PC
4601 LAKE BOONE TRAIL, SUITE 3C, RALEIGH, NC 27607

Firm License No. C-1684 www.aogroup.com
PROJECT NO. : 2021.058

PROJECT NO. BP2.R001.1

CRAVEN COUNTY

STATION: 20+61.00 -L-

SHEET 2 OF 4

STATE OF NORTH CAROLINA
DEPARTMENT OF TRANSPORTATION
RALEIGH

GENERAL DRAWING

BRIDGE ON SR 1232
OVER GRAPE CREEK
BETWEEN SR 1001 & SR 1005
27'-6" CLEAR ROADWAY - 90° SKEW

DocuSigned by:
NORTH CAROLINA PROFESSIONAL SEAL 022997 ENGINEER JAMES J. BARCOMB
A8C764571F80496...
10/13/2022

DOCUMENT NOT CONSIDERED FINAL UNLESS ALL SIGNATURES COMPLETED

REVISIONS						SHEET NO.
NO.	BY:	DATE:	NO.	BY:	DATE:	S-2
1			3			TOTAL SHEETS
2			4			25

DRAWN BY : CT STONE 5/10/22
CHECKED BY : TG ZEBLO 5/10/22
ENGINEER OF RECORD : JAMES J. BARCOMB

DocuSign Envelope ID: D8CB8CE9-77D4-4E83-A77E-E3AF1A00D444

SUMMARY OF PILE INFORMATION/INSTALLATION

(Blank entries indicate item is not applicable to structure)

End Bent/ Bent No, Pile(s) #-# (e.g., "Bent 1, Piles 1-5")	Factored Resistance per Pile TONS	Pile Cut-Off (Top of Pile) Elevation FT	Estimated Pile Lenth per Pile FT	Scour Critical Elevation FT	Driven Piles			Predrilling for Piles*			Drilled-In Piles		
					Min Pile Tip (Tip No Higher Than) Elev FT	Required Driving Resistance (RDR)** per Pile TONS	Total Pile Redrives Quantity EACH	Predrilling Length per Pile Lin FT	Predrilling Elevation (Elev Not To Predrill Below) FT	Maximum Predrilling Dia INCHES	Pile Excavation (Bottom of Hole) Elev FT	Pile Exc Not In Soil per Pile Lin FT	Pile Exc In Soil per Pile Lin FT
End Bent 1, Piles 1-5	61	32.8	55			145							
Bent 1, Piles 1-7	118	32.6	75	15.0	-6.0	205	9						
End Bent 2, Piles 1-5	97	32.9	75			100							

*Predrilling for Piles is required for end bents/bents with a predrilling length and at the Contractor's option for end bents/bents with predrilling information but no predrilling length.

$$^{**}RDR = \frac{Factored\ Resistance + Factored\ Downdrag\ Load + Factored\ Dead\ Load}{Dynamic\ Resistance\ Factor} + Nominal\ Downdrag\ Resistance + \frac{Nominal\ Scour\ Resistance}{Scour\ Resistance\ Factor}$$

SUMMARY OF PDA/PILE ORDER LENGTHS

(Blank entries indicate item is not applicable to structure)

Pile Driving Analyzer (PDA)				Pile Order Lengths	
End Bent/ Bent No	PDA Testing Required? YES or MAYBE	PDA Test Pile Length FT	Total PDA Testing Quantity EACH	End Bent/ Bent No(s)	Pile Order Length Basis* EST or PDA
End Bent 1, Piles 1-5	MAYBE	60			
Bent 1, Piles 1-7	MAYBE	80	1		
End Bent 2, Piles 1-5	MAYBE	80			

*EST = Pile order lengths from estimated pile lengths; PDA = Pile order lengths based on PDA testing. For groups of end bents/bents with pile order lengths based on PDA testing, the first end bent/bent no. listed for each group is the representative end bent/bent with the PDA.

PILE DESIGN INFORMATION

(Blank entries indicate item is not applicable to structure)

End Bent/ Bent No, Pile(s) #-# (e.g., "Bent 1, Piles 1-5")	Factored Axial Load per Pile TONS	Factored Downdrag Load per Pile TONS	Factored Dead Load* per Pile TONS	Dynamic Resistance Factor	Nominal Downdrag Resistance per Pile TONS	Nominal Scour Resistance per Pile TONS	Scour Resistance Factor (Default = 1.00)
End Bent 1, Piles 1-5	61			0.60			
Bent 1, Piles 1-7	118			0.60		7.0	1.00
End Bent 2, Piles 1-5	97			0.60			

*Factored Dead Load is factored weight of pile above the ground line.

NOTES:

1. The Pile Foundation Tables are based on the bridge substructure design and foundation recommendations sealed by a North Carolina Professional Engineer (Jinyoung Park, PE# 032171) on 4-19-2022.
2. Total Pile Driving Equipment Setup quantity (not shown in Pile Foundation Tables) equals the number of driven piles, i.e., the number of piles with a Required Driving Resistance.
3. The Engineer will determine the need for PDA Testing when PDAs may be required.
4. For piles, see piles provision and section 450 of the Standard Specifications.
5. Use Type II modified bridge approach fill details at each End Bent.
6. No waiting period is required before beginning of End Bent 1 and End Bent 2 construction.
7. The design scour elevation for Bent No. 1 is 17.5 FT.
8. Use a single row of plumb piles at all Bents.

PROJECT NO. BP2.R001.1 (SF-240066)

CRAVEN COUNTY

STATION: 20+61.00 -L-

SHEET 3 OF 4

STATE OF NORTH CAROLINA
DEPARTMENT OF TRANSPORTATION
RALEIGH

PILE FOUNDATION TABLES

DocuSigned by:
A8C764871E80489...
10/13/2022

SIGNATURE DATE

DOCUMENT NOT CONSIDERED FINAL UNLESS ALL SIGNATURES COMPLETED

REVISIONS						SHEET NO.
NO.	BY:	DATE:	NO.	BY:	DATE:	S-3
1			3			TOTAL SHEETS
2			4			25

DocuSign Envelope ID: 1146104C-D447-4A2D-8E5A-326E1D6F5BD7

BM1: RR SPIKE SET IN 15" HARDWOOD STA. 20+05.81 -L- 116.75' LT ELEV. 34.35

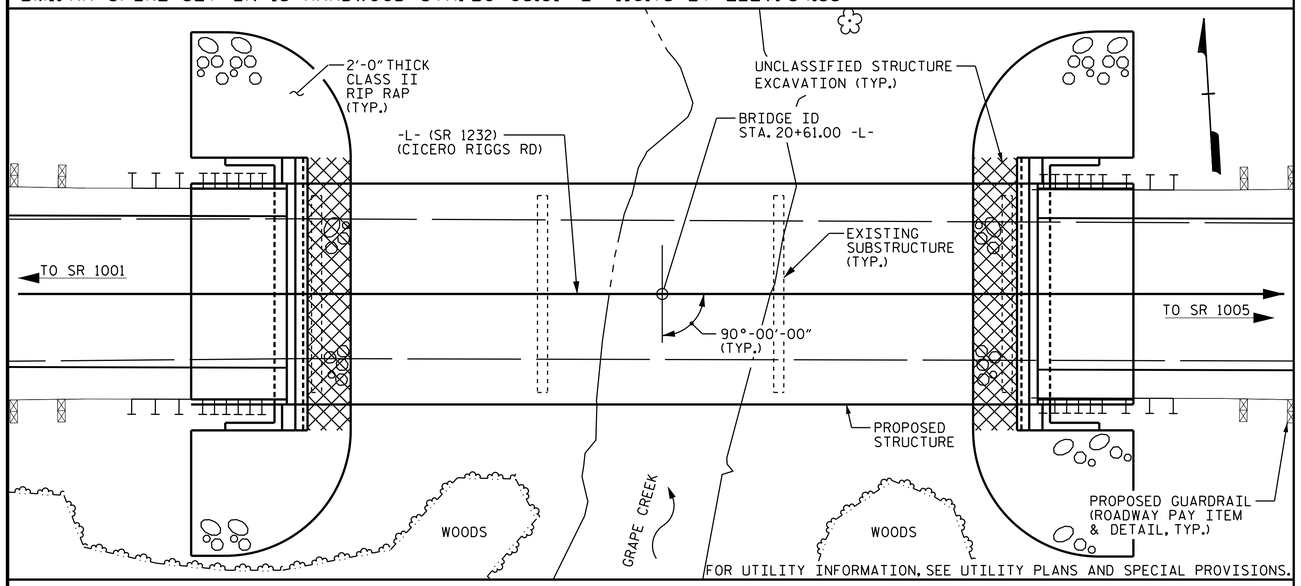

FOR UTILITY INFORMATION, SEE UTILITY PLANS AND SPECIAL PROVISIONS.

LOCATION SKETCH

TOTAL BILL OF MATERIAL

	REMOVAL OF EXISTING STRUCTURE @ STA. 20+61.00 -L-	ASBESTOS ASSESSMENT	PDA TESTING	UNCLASSIFIED STRUCTURE EXCAVATION	CLASS A CONCRETE	BRIDGE APPROACH SLABS	REINFORCING STEEL	PILE DRIVING EQUIPMENT SETUP FOR HP12X53 STEEL PILES	PILE DRIVING EQUIPMENT SETUP FOR HP14X73 STEEL PILES
	LUMP SUM	LUMP SUM	EA.	LUMP SUM	CU. YDS.	LUMP SUM	LBS.	EA.	EA.
SUPERSTRUCTURE						LUMP SUM			
END BENT NO. 1			1	LUMP SUM	12.2		1965	5	
BENT NO. 1			1		10.4		2113		7
END BENT NO. 2			1	LUMP SUM	12.4		1965	5	
TOTAL	LUMP SUM	LUMP SUM	3	LUMP SUM	35.0	LUMP SUM	6043	10	7

TOTAL BILL OF MATERIAL

	HP 12 X 53 STEEL PILES		HP 14 X 73 GALVANIZED STEEL PILES		PILE REDRIVES	TWO BAR METAL RAIL	1'-2" X 2'-8⅝" CONCRETE PARAPET	1'-2" X 2'-8" CONCRETE PARAPET	PLAIN RIP RAP CLASS II (2'-0" THICK)	GEOTEXTILE FOR DRAINAGE (2'-0" THICK)	ELASTOMERIC BEARINGS	3'-0" X 1'-9" PRESTRESSED CONCRETE CORED SLABS		3'-0" X 2'-0" PRESTRESSED CONCRETE CORED SLABS	
	NO.	LIN.FT.	NO.	LIN.FT.	EA.	LIN.FT.	LIN.FT.	LIN.FT.	TON	SQ.YDS.	LUMP SUM	NO.	LIN.FT.	NO.	LIN.FT.
SUPERSTRUCTURE						185	60.00	140.00			LUMP SUM	10	300	10	700
END BENT NO. 1	5	275			3				45	50					
BENT NO. 1			7	525	3										
END BENT NO. 2	5	375			3				45	50					
TOTAL	10	650	7	525	9	185	60.00	140.00	90	100	LUMP SUM	10	300	10	700

NOTES

ASSUMED LIVE LOAD = HL-93 OR ALTERNATE LOADING.

THIS BRIDGE HAS BEEN DESIGNED IN ACCORDANCE WITH THE REQUIREMENTS OF THE AASHTO LRFD BRIDGE DESIGN SPECIFICATIONS.

THIS BRIDGE IS LOCATED IN SEISMIC ZONE 1.

FOR OTHER DESIGN DATA AND GENERAL NOTES, SEE SHEET SN.

FOR SUBMITTAL OF WORKING DRAWINGS, SEE SPECIAL PROVISIONS.

FOR FALSEWORK AND FORMWORK, SEE SPECIAL PROVISIONS.

FOR CRANE SAFETY, SEE SPECIAL PROVISIONS.

FOR GROUT FOR STRUCTURES, SEE SPECIAL PROVISIONS.

FOR FOUNDATION NOTES, SEE SHEET 3 OF 4.

FOR EROSION CONTROL MEASURES, SEE EROSION CONTROL PLANS.

DECK DRAINS ARE NOT REQUIRED.

ASHPALT WEARING SURFACE IS INCLUDED IN ROADWAY QUANTITY ON ROADWAY PLANS.

ALL PAVEMENT MARKING WILL BE IN ACCORDANCE WITH THE PAVEMENT MARKING PLANS AND SHALL PROVIDE FOR BICYCLES.

THE MATERIAL SHOWN IN THE CROSS-HATCHED AREA SHALL BE EXCAVATED FOR A DISTANCE OF 25FT +/- EACH SIDE OF CENTERLINE ROADWAY AS DIRECTED BY THE ENGINEER. THIS WORK WILL BE PAID FOR AT THE CONTRACT LUMP SUM PRICE FOR UNCLASSIFIED STRUCTURE EXCAVATION. SEE SECTION 412 OF THE STANDARD SPECIFICATIONS.

THE SUBSTRUCTURE OF THE EXISTING BRIDGE INDICATED ON THE PLANS IS FROM THE BEST INFORMATION AVAILABLE. THIS INFORMATION IS SHOWN FOR THE CONVENIENCE OF THE CONTRACTOR. THE CONTRACTOR SHALL HAVE NO CLAIM WHATSOEVER AGAINST THE DEPARTMENT OF TRANSPORTATION FOR ANY DELAYS OR ADDITIONAL COST INCURRED BASED ON DIFFERENCES BETWEEN THE EXISTING BRIDGE SUBSTRUCTURE SHOWN ON THE PLANS AND THE ACTUAL CONDITIONS AT THE PROJECT SITE.

REMOVAL OF THE EXISTING BRIDGE SHALL BE PERFORMED IN A MANNER THAT PREVENTS DEBRIS FROM FALLING INTO THE WATER. THE CONTRACTOR SHALL SUBMIT DEMOLITION PLANS FOR REVIEW AND REMOVE THE BRIDGE IN ACCORDANCE WITH ARTICLE 402-2 OF THE STANDARD SPECIFICATIONS.

THIS STRUCTURE HAS BEEN DESIGNED IN ACCORDANCE WITH "HEC-18 - EVALUATING SCOUR AT BRIDGES."

THE EXISTING STRUCTURE CONSISTING OF (3) 30' SPANS OF PRESTRESSED CONCRETE CHANNELS WITH A CLEAR ROADWAY WIDTH OF 24'-2" WITH ASPHALT OVERLAY ON PRECAST CONCRETE CAPS AND TIMBER PILES SHALL BE REMOVED. THE EXISTING BRIDGE IS PRESENTLY POSTED FOR LOAD LIMIT. SHOULD THE STRUCTURAL INTEGRITY OF THE BRIDGE DETERIORATE DURING CONSTRUCTION OF THE PROPOSED BRIDGE, A LOAD LIMIT MAY BE POSTED AND MAY BE REDUCED AS FOUND NECCESSARY DURING THE LIFE OF THE PROJECT.

FOR INTERIOR BENT No. 1, ONLY PARTIAL GALVANIZING OF THE PILES IS REQUIRED. SEE INTERIOR BENT SHEETS FOR REQUIRED GALVANIZED LENGTH. PAYMENT FOR PARTIALLY GALVANIZED PILES WILL BE MADE UNDER THE CONTRACT UNIT PRICE FOR GALVANIZED STEEL PILES.

FOR ASBESTOS ASSESSMENT FOR BRIDGE DEMOLITION AND RENOVATION ACTIVITIES, SEE SPECIAL PROVISIONS.

HYDRAULIC DATA:

DESIGN DISCHARGE -	660	CFS
DESIGN FREQUENCY -	25	YRS
DESIGN HW ELEVATION -	34.3	FT
DRAINAGE AREA -	5.1	SQ. MI.
BASE DISCHARGE (Q100) -	1000	CFS
BASE HW ELEVATION -	35.1	FT

OVERTOPPING DATA:

OVERTOPPING DISCHARGE -	2150	CFS
OVERTOPPING FREQUENCY -	>500	YRS
OVERTOPPING HW ELEVATION -	37.8	FT

LOW POINT OF ROADWAY OVERTOPPING PROFILE OCCURS AT -L- STA. 19+42.34

PROJECT NO. BP2.R001.1

CRAVEN COUNTY

STATION: 20+61.00 -L-

SHEET 4 OF 4

PLAN PREPARED BY:

Founded 1998

ALPHA & OMEGA GROUP
CIVIL | STRUCTURAL | WATER RESOURCES

ALPHA AND OMEGA GROUP, PC
4601 LAKE BOONE TRAIL, SUITE 3C, RALEIGH, NC 27607

Firm License No. C-1684 www.aogroup.com
PROJECT NO. : 2021.058

NORTH CAROLINA PROFESSIONAL SEAL 022997 ENGINEER JAMES J. BARCOMB

DocuSigned by: 10/13/2022

DOCUMENT NOT CONSIDERED FINAL UNLESS ALL SIGNATURES COMPLETED

STATE OF NORTH CAROLINA
DEPARTMENT OF TRANSPORTATION
RALEIGH

GENERAL DRAWING

BRIDGE ON SR 1232
OVER GRAPE CREEK
BETWEEN SR 1001 & SR 1005
27'-6" CLEAR ROADWAY - 90° SKEW

REVISIONS						SHEET NO.
NO.	BY:	DATE:	NO.	BY:	DATE:	S-4
1			3			TOTAL SHEETS
2			4			25

DRAWN BY : CT STONE 5/10/22
CHECKED BY : TG ZEBLO 5/10/22
ENGINEER OF RECORD : JAMES J. BARCOMB

$$$$$$SYSTIME$$$$$
$$$$$$$$$$$$$$$$$$$$$$$$DGN$$$$$$$$$$$$$$$$$$$$$$$$
$$$$USERNAME$$$$

DocuSign Envelope ID: F10D605F-0ADF-4763-B91E-7365ACB1A0EB

LOAD AND RESISTANCE FACTOR RATING (LRFD) SUMMARY FOR PRESTRESSED CONCRETE GIRDERS

LEVEL		VEHICLE	WEIGHT (W) (TONS)	CONTROLLING LOAD RATING	MINIMUM RATING FACTORS (RF)	TONS = W X RF	STRENGTH I LIMIT STATE											SERVICE III LIMIT STATE						COMMENT NUMBER
							LIVELOAD FACTORS	MOMENT					SHEAR					LIVELOAD FACTORS	MOMENT					
								DISTRIBUTION FACTORS (DF)	RATING FACTOR	SPAN	GIRDER LOCATION	DISTANCE FROM LEFT END OF SPAN (ft)	DISTRIBUTION FACTORS (DF)	RATING FACTOR	SPAN	GIRDER LOCATION	DISTANCE FROM LEFT END OF SPAN (ft)		DISTRIBUTION FACTORS (DF)	RATING FACTOR	SPAN	GIRDER LOCATION	DISTANCE FROM LEFT END OF SPAN (ft)	
DESIGN LOAD RATING		HL-93(Inv)	N/A	1	1.037	--	1.75	0.283	1.83	30'	EL	14.5	0.574	**1.04**	30'	EL	**1.45**	0.80	0.283	1.58	30'	EL	14.5	
		HL-93(Opr)	N/A	--	1.344	--	1.35	0.283	2.38	30'	EL	14.5	0.574	1.34	30'	EL	1.45	N/A	--	--	--	--	--	
		HS-20(Inv)	36.000	2	1.183	42.587	1.75	0.283	2.53	30'	EL	11.6	0.574	**1.18**	30'	EL	**1.45**	0.80	0.283	2.20	30'	EL	11.6	
		HS-20(Opr)	36.000	--	1.533	55.205	1.35	0.283	3.28	30'	EL	11.6	0.574	1.53	30'	EL	1.45	N/A	--	--	--	--	--	
LEGAL LOAD RATING	SV	SNSH	13.500	--	2.895	39.081	1.4	0.283	5.18	30'	EL	14.5	0.574	2.89	30'	EL	1.45	0.80	0.283	3.56	30'	EL	14.5	
		SNGARBS2	20.000	--	2.240	44.792	1.4	0.283	4.53	30'	EL	11.6	0.574	2.24	30'	EL	1.45	0.80	0.283	3.15	30'	EL	11.6	
		SNAGRIS2	22.000	--	2.157	47.463	1.4	0.283	4.6	30'	EL	11.6	0.574	2.16	30'	EL	1.45	0.80	0.283	3.20	30'	EL	11.6	
		SNCOTTS3	27.250	--	1.462	39.849	1.4	0.283	2.6	30'	EL	14.5	0.574	1.46	30'	EL	1.45	0.80	0.283	1.79	30'	EL	14.5	
		SNAGGRS4	34.925	--	1.346	46.999	1.4	0.283	2.5	30'	EL	14.5	0.574	1.35	30'	EL	1.45	0.80	0.283	1.72	30'	EL	14.5	
		SNS5A	35.550	--	1.427	50.733	1.4	0.283	2.42	30'	EL	14.5	0.574	1.43	30'	EL	1.45	0.80	0.283	1.67	30'	EL	14.5	
		SNS6A	39.950	--	1.341	53.59	1.4	0.283	2.29	30'	EL	14.5	0.574	1.34	30'	EL	1.45	0.80	0.283	1.58	30'	EL	14.5	
		SNS7B	42.000	--	1.369	57.505	1.4	0.283	2.23	30'	EL	14.5	0.574	1.37	30'	EL	1.45	0.80	0.283	1.53	30'	EL	14.5	
	TTST	TNAGRIT3	33.000	--	1.593	52.58	1.4	0.283	2.97	30'	EL	14.5	0.574	1.59	30'	EL	1.45	0.80	0.283	2.04	30'	EL	14.5	
		TNT4A	33.075	--	1.483	49.043	1.4	0.283	2.82	30'	EL	14.5	0.574	1.48	30'	EL	1.45	0.80	0.283	1.94	30'	EL	14.5	
		TNT6A	41.600	--	1.433	59.622	1.4	0.283	2.56	30'	EL	14.5	0.574	1.43	30'	EL	1.45	0.80	0.283	1.76	30'	EL	14.5	
		TNT7A	42.000	--	1.363	57.264	1.4	0.283	2.64	30'	EL	14.5	0.574	1.36	30'	EL	1.45	0.80	0.283	1.82	30'	EL	14.5	
		TNT7B	42.000	--	1.331	55.915	1.4	0.283	2.49	30'	EL	14.5	0.574	1.33	30'	EL	1.45	0.80	0.283	1.72	30'	EL	14.5	
		TNAGRIT4	43.000	--	1.287	55.356	1.4	0.283	2.58	30'	EL	14.5	0.574	1.29	30'	EL	1.45	0.80	0.283	1.78	30'	EL	14.5	
		TNAGT5A	45.000	--	1.381	62.151	1.4	0.283	2.5	30'	EL	14.5	0.574	1.38	30'	EL	1.45	0.80	0.283	1.72	30'	EL	14.5	
		TNAGT5B	45.000	3	1.212	54.54	1.4	0.283	2.41	30'	EL	11.6	0.574	**1.21**	30'	EL	**1.45**	0.80	0.283	1.66	30'	EL	11.6	

LOAD FACTORS:

DESIGN LOAD RATING FACTORS	LIMIT STATE	γ_{DC}	γ_{DW}
	STRENGTH I	1.25	1.50
	SERVICE III	1.00	1.00

NOTES:

MINIMUM RATING FACTORS ARE BASED ON THE STRENGTH I AND SERVICE III LIMIT STATES.

ALLOWABLE STRESSES FOR SERVICE III LIMIT STATE ARE AS REQUIRED FOR DESIGN.

COMMENTS:

1.
2.
3.
4.

(#) CONTROLLING LOAD RATING

(1) DESIGN LOAD RATING (HL-93)

(2) DESIGN LOAD RATING (HS-20)

(3) LEGAL LOAD RATING **

** SEE CHART FOR VEHICLE TYPE

GIRDER LOCATION

I - INTERIOR GIRDER
EL - EXTERIOR LEFT GIRDER
ER - EXTERIOR RIGHT GIRDER

LRFR SUMMARY

FOR SPAN 'A'

PROJECT NO. BP2.R001.1

CRAVEN COUNTY

STATION: 20+61.00 -L-

PLAN PREPARED BY:

ALPHA & OMEGA GROUP
CIVIL | STRUCTURAL | WATER RESOURCES

ALPHA AND OMEGA GROUP, PC
4601 LAKE BOONE TRAIL, SUITE 3C, RALEIGH, NC 27607

Firm License No. C-1684 www.aogroup.com

A&O PROJECT NO. : 2021.058

THIS DRAWING REVIWED AND ADOPTED FOR USE AT THE REFERENCED LOCATION BY THE UNDERSIGNED:

NORTH CAROLINA PROFESSIONAL SEAL 022997 ENGINEER JAMES J. BARCONIC

DocuSigned by: A8C784871E8048C...

10/13/2022

DOCUMENT NOT CONSIDERED FINAL UNLESS ALL SIGNATURES COMPLETED

STATE OF NORTH CAROLINA
DEPARTMENT OF TRANSPORTATION
RALEIGH

STANDARD
LRFR SUMMARY FOR 30' CORED SLAB UNIT 90° SKEW
(NON-INTERSTATE TRAFFIC)

REVISIONS						SHEET NO.
NO.	BY:	DATE:	NO.	BY:	DATE:	S-5
1			3			TOTAL SHEETS
2			4			25

ASSEMBLED BY : CT STONE DATE :5/4/2022
CHECKED BY : TG ZEBLO DATE :5/5/2022
DRAWN BY : CVC 6/10
CHECKED BY : DNS 6/10

$$$$$$SYSTIME$$$$$
$$$$$$$$$$$$$$$$$$$$$$$$DGN$$$$$$$$$$$$$$$$$$$$$$$
$$$$USERNAME$$$$

STD. NO. 21LRFR1_90S_30L

DocuSign Envelope ID: 2183F094-1229-41CE-AB0E-AC555E6AA427

LOAD AND RESISTANCE FACTOR RATING (LRFD) SUMMARY FOR PRESTRESSED CONCRETE GIRDERS

LEVEL		VEHICLE	WEIGHT (W) (TONS)	CONTROLLING LOAD RATING	MINIMUM RATING FACTORS (RF)	TONS = W X RF	STRENGTH I LIMIT STATE											SERVICE III LIMIT STATE						COMMENT NUMBER
							LIVELOAD FACTORS	MOMENT					SHEAR					LIVELOAD FACTORS	MOMENT					
								DISTRIBUTION FACTORS (DF)	RATING FACTOR	SPAN	GIRDER LOCATION	DISTANCE FROM LEFT END OF SPAN (ft)	DISTRIBUTION FACTORS (DF)	RATING FACTOR	SPAN	GIRDER LOCATION	DISTANCE FROM LEFT END OF SPAN (ft)		DISTRIBUTION FACTORS (DF)	RATING FACTOR	SPAN	GIRDER LOCATION	DISTANCE FROM LEFT END OF SPAN (ft)	
DESIGN LOAD RATING		HL-93(Inv)	N/A	1	1.006	--	1.75	0.273	1.03	70'	EL	34.5	0.507	1.32	70'	EL	6.9	0.80	0.273	**1.01**	70'	EL	**34.5**	
		HL-93(Opr)	N/A	--	1.341	--	1.35	0.273	1.34	70'	EL	34.5	0.507	1.72	70'	EL	6.9	N/A	--	--	--	--	--	
		HS-20(Inv)	36.000	2	1.306	47.02	1.75	0.273	1.34	70'	EL	34.5	0.507	1.65	70'	EL	6.9	0.80	0.273	**1.31**	70'	EL	**34.5**	
		HS-20(Opr)	36.000	--	1.74	62.64	1.35	0.273	1.74	70'	EL	34.5	0.507	2.14	70'	EL	6.9	N/A	--	--	--	--	--	
LEGAL LOAD RATING	SV	SNSH	13.500	--	2.917	39.379	1.4	0.273	3.75	70'	EL	34.5	0.507	4.87	70'	EL	6.9	0.80	0.273	2.92	70'	EL	34.5	
		SNGARBS2	20.000	--	2.187	43.741	1.4	0.273	2.81	70'	EL	34.5	0.507	3.47	70'	EL	6.9	0.80	0.273	2.19	70'	EL	34.5	
		SNAGRIS2	22.000	--	2.077	45.69	1.4	0.273	2.67	70'	EL	34.5	0.507	3.23	70'	EL	6.9	0.80	0.273	2.08	70'	EL	34.5	
		SNCOTTS3	27.250	--	1.452	39.565	1.4	0.273	1.87	70'	EL	34.5	0.507	2.43	70'	EL	6.9	0.80	0.273	1.45	70'	EL	34.5	
		SNAGGRS4	34.925	--	1.218	42.554	1.4	0.273	1.57	70'	EL	34.5	0.507	2.03	70'	EL	6.9	0.80	0.273	1.22	70'	EL	34.5	
		SNS5A	35.550	--	1.191	42.346	1.4	0.273	1.53	70'	EL	34.5	0.507	2.06	70'	EL	6.9	0.80	0.273	1.19	70'	EL	34.5	
		SNS6A	39.950	--	1.095	43.747	1.4	0.273	1.41	70'	EL	34.5	0.507	1.88	70'	EL	6.9	0.80	0.273	1.10	70'	EL	34.5	
		SNS7B	42.000	--	1.043	43.801	1.4	0.273	1.34	70'	EL	34.5	0.507	1.85	70'	EL	6.9	0.80	0.273	1.04	70'	EL	34.5	
	TTST	TNAGRIT3	33.000	--	1.336	44.087	1.4	0.273	1.72	70'	EL	34.5	0.507	2.23	70'	EL	6.9	0.80	0.273	1.34	70'	EL	34.5	
		TNT4A	33.075	--	1.342	44.401	1.4	0.273	1.72	70'	EL	34.5	0.507	2.17	70'	EL	6.9	0.80	0.273	1.34	70'	EL	34.5	
		TNT6A	41.600	--	1.1	45.746	1.4	0.273	1.41	70'	EL	34.5	0.507	1.98	70'	EL	6.9	0.80	0.273	1.10	70'	EL	34.5	
		TNT7A	42.000	--	1.106	46.462	1.4	0.273	1.42	70'	EL	34.5	0.507	1.94	70'	EL	6.9	0.80	0.273	1.11	70'	EL	34.5	
		TNT7B	42.000	--	1.147	48.18	1.4	0.273	1.47	70'	EL	34.5	0.507	1.8	70'	EL	6.9	0.80	0.273	1.15	70'	EL	34.5	
		TNAGRIT4	43.000	--	1.089	46.838	1.4	0.273	1.4	70'	EL	34.5	0.507	1.74	70'	EL	6.9	0.80	0.273	1.09	70'	EL	34.5	
		TNAGT5A	45.000	--	1.026	46.175	1.4	0.273	1.32	70'	EL	34.5	0.507	1.74	70'	EL	6.9	0.80	0.273	1.03	70'	EL	34.5	
		TNAGT5B	45.000	3	1.013	45.579	1.4	0.273	1.3	70'	EL	34.5	0.507	1.66	70'	EL	6.9	0.80	0.273	**1.01**	70'	EL	**34.5**	

LOAD FACTORS:

DESIGN LOAD RATING FACTORS	LIMIT STATE	γ_{DC}	γ_{DW}
	STRENGTH I	1.25	1.50
	SERVICE III	1.00	1.00

NOTES:

MINIMUM RATING FACTORS ARE BASED ON THE STRENGTH I AND SERVICE III LIMIT STATES.

ALLOWABLE STRESSES FOR SERVICE III LIMIT STATE ARE AS REQUIRED FOR DESIGN.

COMMENTS:

1.
2.
3.
4.

(#) CONTROLLING LOAD RATING

(1) DESIGN LOAD RATING (HL-93)

(2) DESIGN LOAD RATING (HS-20)

(3) LEGAL LOAD RATING **

** SEE CHART FOR VEHICLE TYPE

GIRDER LOCATION

I - INTERIOR GIRDER
EL - EXTERIOR LEFT GIRDER
ER - EXTERIOR RIGHT GIRDER

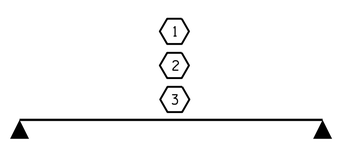

LRFR SUMMARY

FOR SPAN 'B'

PROJECT NO. BP2.R001.1

CRAVEN COUNTY

STATION: 20+61.00 -L-

PLAN PREPARED BY:

ALPHA & OMEGA GROUP
CIVIL | STRUCTURAL | WATER RESOURCES
ALPHA AND OMEGA GROUP, PC
4601 LAKE BOONE TRAIL, SUITE 3C, RALEIGH, NC 27607
Firm License No. C-1684 www.aogroup.com
A&O PROJECT NO.: 2021.058

THIS DRAWING REVIWED AND ADOPTED FOR USE AT THE REFERENCED LOCATION BY THE UNDERSIGNED:

NORTH CAROLINA PROFESSIONAL SEAL 022997 ENGINEER JAMES J. BARCONE

DocuSigned by: A8C764871F804C...

10/13/2022

DOCUMENT NOT CONSIDERED FINAL UNLESS ALL SIGNATURES COMPLETED

STATE OF NORTH CAROLINA
DEPARTMENT OF TRANSPORTATION
RALEIGH

STANDARD
LRFR SUMMARY FOR 70' CORED SLAB UNIT 90° SKEW
(NON-INTERSTATE TRAFFIC)

REVISIONS						SHEET NO.
NO.	BY:	DATE:	NO.	BY:	DATE:	S-6
1			3			TOTAL SHEETS
2			4			25

ASSEMBLED BY : CT STONE DATE : 5/4/2022
CHECKED BY : TG ZEBLO DATE : 5/5/2022
DRAWN BY : CVC 6/10
CHECKED BY : DNS 6/10

$$$$$$SYSTIME$$$$$
$$$$$$$$$$$$$$$$$$$$$$$$DGN$$$$$$$$$$$$$$$$$$$$$$$$
$$$$USERNAME$$$$

STD. NO. 24LRFR1_90S_70L

DocuSign Envelope ID: AE734BB8-C4C5-4F39-BBCE-E0EC34EA71CE

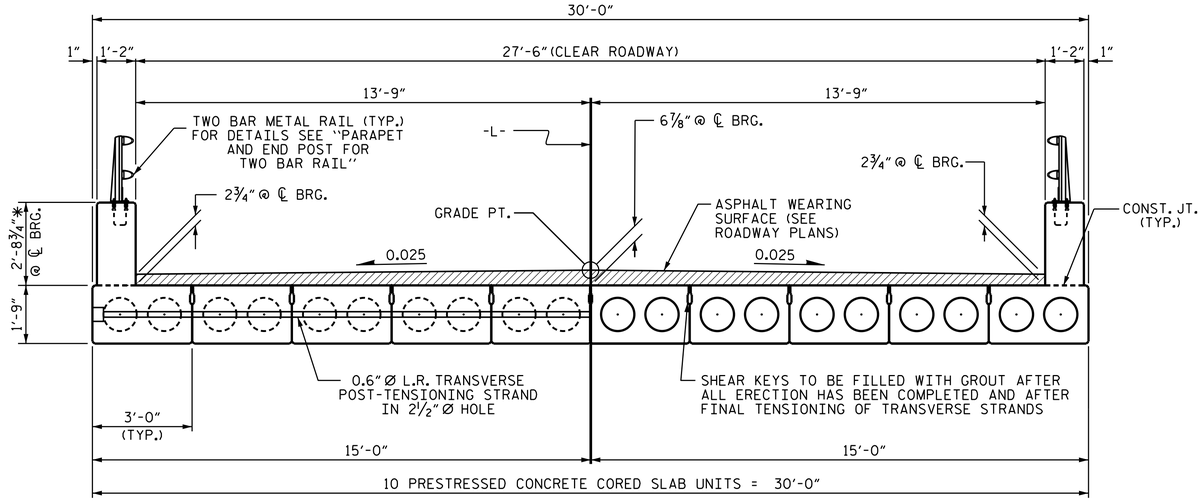

HALF SECTION
AT INTERMEDIATE DIAPHRAGMS

HALF SECTION
THROUGH VOIDS

TYPICAL SECTION

*- THE MAXIMUM PARAPET HEIGHT AND ASPHALT THICKNESS IS SHOWN. THE HEIGHT OF THE PARAPET AND ASPHALT THICKNESS VARIES WHILE THE TOP OF THE PARAPET FOLLOWS THE PROFILE OF THE GUTTERLINE. FOR PARAPET HEIGHT DETAILS AND ASPHALT THICKNESS SEE THE "PARAPET AND END POST FOR TWO BAR RAIL" DETAIL.

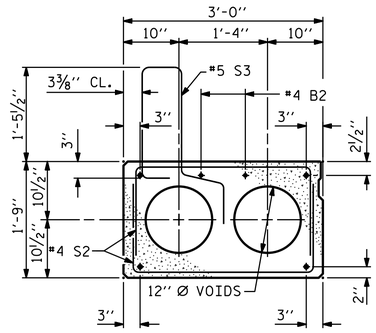

EXT. SLAB SECTION

(FOR PRESTRESSED STRAND LAYOUT, SEE INTERIOR SLAB SECTION.)

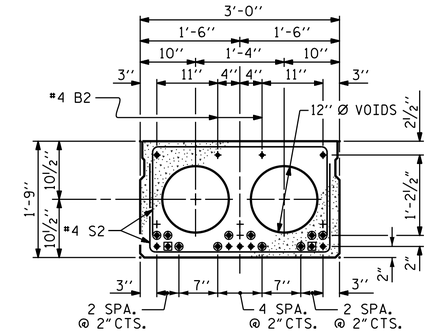

INTERIOR SLAB SECTION
(30' UNIT)
(9 STRANDS REQUIRED)

0.6" Ø LOW RELAXATION STRAND LAYOUT

● BOND SHALL BE BROKEN ON THESE STRANDS FOR A DISTANCE OF 2'-0" FROM END OF CORED SLAB UNIT. SEE STANDARD SPECIFICATIONS, ARTICLE 1078-7.

◉ OPTIONAL FULL LENGTH DEBONDED STRANDS. THESE STRANDS ARE NOT REQUIRED. IF THE FABRICATOR CHOOSES TO INCLUDE THESE STRANDS IN THE CORED SLAB UNIT, THE STRANDS SHALL BE DEBONDED FOR THE FULL LENGTH OF THE UNIT AT NO ADDITIONAL COST. SEE STANDARD SPECIFICATIONS, ARTICLE 1078-7.

DEBONDING LEGEND

FIXED END

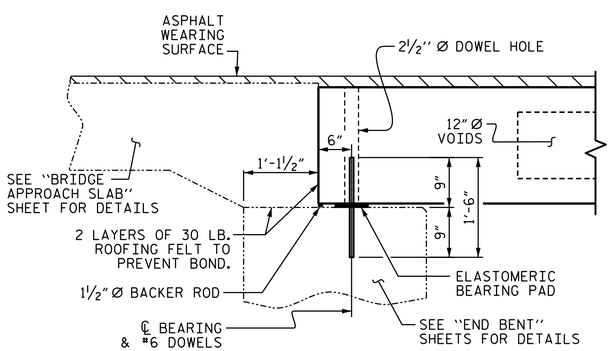

SECTION AT END BENT

FIXED END FIXED END

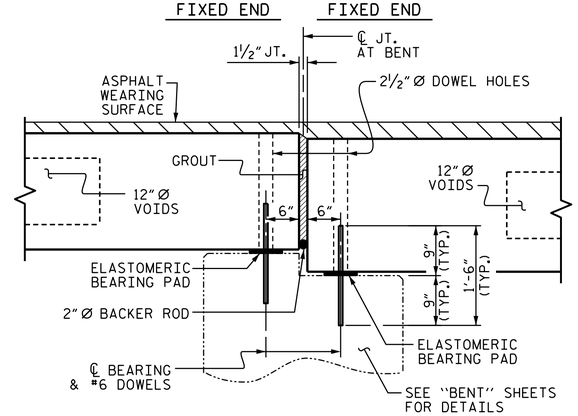

SECTION AT BENT No. 1

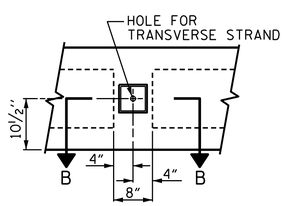

ELEVATION VIEW

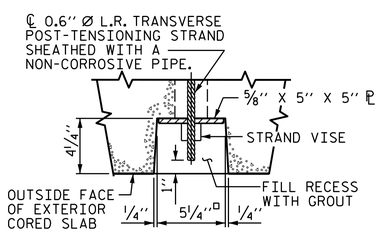

SECTION B-B

GROUTED RECESS AT END OF POST-TENSIONED STRAND OF CORED SLABS

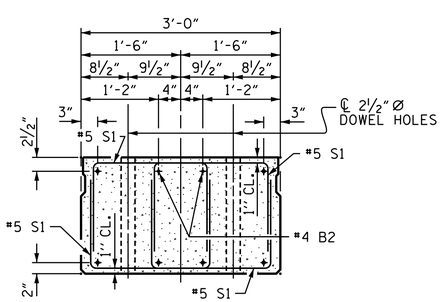

END ELEVATION

SHOWING PLACEMENT OF DOUBLE STIRRUPS AND LOCATION OF DOWEL HOLES. (STRAND LAYOUT NOT SHOWN.) INTERIOR SLAB UNIT SHOWN-EXTERIOR SLAB UNIT SIMILAR EXCEPT SHEAR KEY LOCATION.

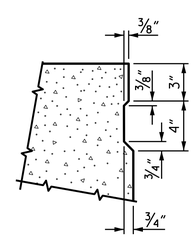

SHEAR KEY DETAIL

NOTE: OMIT SHEAR KEY ON OUTSIDE FACE OF EXTERIOR CORED SLABS.

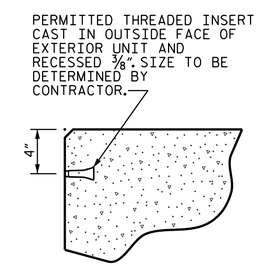

THREADED INSERT DETAIL

PROJECT NO. BP2.R001.1
CRAVEN COUNTY
STATION: 20+61.00 -L-

SHEET 1 OF 3

STATE OF NORTH CAROLINA
DEPARTMENT OF TRANSPORTATION
RALEIGH

STANDARD
3'-0" X 1'-9"
PRESTRESSED CONCRETE
CORED SLAB UNIT
90° SKEW
SPAN 'A'

ASSEMBLED BY : CT STONE	DATE : 5/4/22
CHECKED BY : TG ZEBLO	DATE : 5/5/22
DRAWN BY : DGE 5/09	REV. 8/14 MAA/TMG
CHECKED BY : BCH 6/09	

PLAN PREPARED BY:
Founded 1998
ALPHA & OMEGA GROUP
CIVIL | STRUCTURAL | WATER RESOURCES
ALPHA AND OMEGA GROUP, PC
4601 LAKE BOONE TRAIL, SUITE 3C, RALEIGH, NC 27607
Firm License No. C-1684 www.aogroup.com
A&O PROJECT NO. : 2021.058

NORTH CAROLINA PROFESSIONAL ENGINEER SEAL 022997 JAMES J. BARCONE
DocuSigned by: A8C764871F8049C...
10/13/2022

DOCUMENT NOT CONSIDERED FINAL UNLESS ALL SIGNATURES COMPLETED

REVISIONS						
NO.	BY:	DATE:	NO.	BY:	DATE:	
1			3			
2			4			

SHEET NO. S-7
TOTAL SHEETS 25

STD. NO. 21"PCS2_30_90S

DocuSign Envelope ID: 014F2AEC-4DE1-46E7-A2E2-46E48EECC876

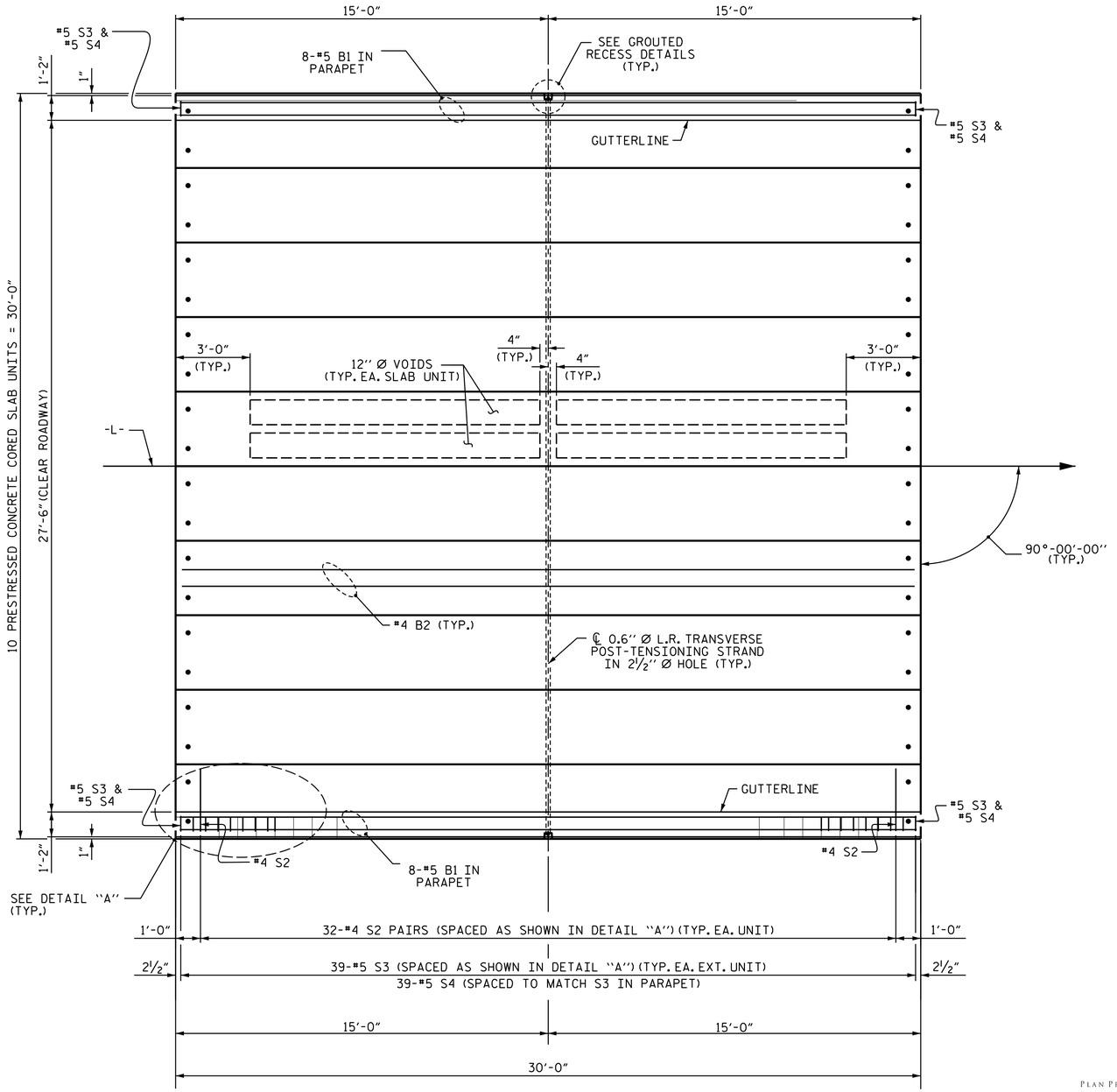

PLAN OF UNIT

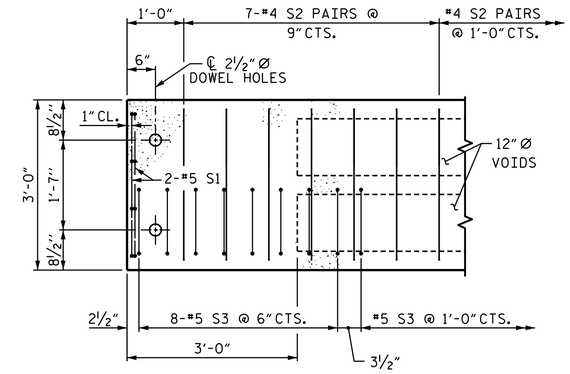

DETAIL "A"

(TYPICAL EACH END OF UNIT)
NOTE: EXTERIOR UNIT SHOWN - INTERIOR UNIT SIMILAR EXCEPT OMIT #5 S3 BARS.

PROJECT NO. BP2.R001.1
CRAVEN COUNTY
STATION: 20+61.00 -L-

SHEET 2 OF 3

STATE OF NORTH CAROLINA
DEPARTMENT OF TRANSPORTATION
RALEIGH

PLAN OF 30' UNIT
27'-6" CLEAR ROADWAY
90° SKEW
SPAN 'A'

PLAN PREPARED BY:

ALPHA & OMEGA GROUP
CIVIL | STRUCTURAL | WATER RESOURCES
ALPHA AND OMEGA GROUP, PC
4601 LAKE BOONE TRAIL, SUITE 3C, RALEIGH, NC 27607
Firm License No. C-1684 www.aogroup.com
A&O PROJECT NO.: 2021.058

DocuSigned by:
A8C764871F8049C...
10/13/2022

DOCUMENT NOT CONSIDERED FINAL UNLESS ALL SIGNATURES COMPLETED

REVISIONS							
NO.	BY:	DATE:	NO.	BY:	DATE:		
1			3				
2			4				

SHEET NO. S-8
TOTAL SHEETS 25

ASSEMBLED BY : CT STONE		DATE : 5/4/22	
CHECKED BY : TG ZEBLO		DATE : 5/5/22	
DRAWN BY : DGE 3/09	REV. 12/5/11	MAA/AAC	
CHECKED BY : BCH 3/09	REV. 8/14	MAA/TMG	

STD. NO. 21" PCS_30_90S_30L

$$$$$$SYSTIME$$$$$
$$$$$$$$$$$$$$$$$$$$$$$$DGN$$$$$$$$$$$$$$$$$$$$$$$
$$$$USERNAME$$$$

DocuSign Envelope ID: DE772F4B-FFEF-4883-AB24-A21A718399EF

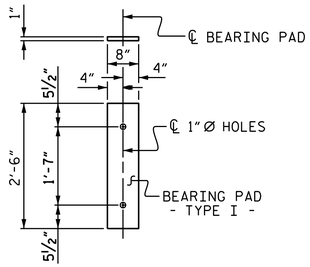

FIXED END
(TYPE I - 20 REQ'D)

ELASTOMERIC BEARING DETAILS

ELASTOMER IN BEARINGS FOR 21"CSU SHALL BE 50 DUROMETER HARDNESS.

BILL OF MATERIAL FOR ONE 30' CORED SLAB UNIT

				EXTERIOR UNIT		INTERIOR UNIT	
BAR	NUMBER	SIZE	TYPE	LENGTH	WEIGHT	LENGTH	WEIGHT
B2	2	#4	STR	29'-8"	40	29'-8"	40
S1	8	#5	3	4'-3"	35	4'-3"	35
S2	64	#4	3	5'-4"	228	5'-4"	228
✳ S3	39	#5	1	5'-10"	237		
REINFORCING STEEL			LBS.		303		303
✳ EPOXY COATED REINFORCING STEEL			LBS.		237		
5000 P.S.I. CONCRETE			CU. YDS.		4.4		4.4
0.6" Ø L.R. STRANDS			No.		9		9

BAR TYPES

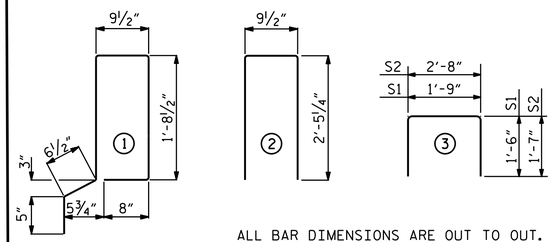

ALL BAR DIMENSIONS ARE OUT TO OUT.

GUTTERLINE ASPHALT THICKNESS & PARAPET HEIGHT

	ASPHALT OVERLAY THICKNESS	PARAPET HEIGHT
	@ MID-SPAN	@ MID-SPAN
30' UNITS	2⅝"	2'-8⅝"

DEAD LOAD DEFLECTION AND CAMBER

	3'-0" x 1'-9"
30' CORED SLAB UNIT	0.6" Ø L.R. STRAND
CAMBER (SLAB ALONE IN PLACE)	¼" ↑
DEFLECTION DUE TO SUPERIMPOSED DEAD LOAD✳✳	⅛" ↓
FINAL CAMBER	⅛" ↑

✳✳ INCLUDES FUTURE WEARING SURFACE

CORED SLABS REQUIRED

	NUMBER	LENGTH	TOTAL LENGTH
30' UNIT			
EXTERIOR C.S.	2	30'-0"	60'-0"
INTERIOR C.S.	8	30'-0"	240'-0"
TOTAL	10		300'-0"

BILL OF MATERIAL FOR PARAPET AND ONE END POST

BAR	NUMBER	SIZE	TYPE	LENGTH	WEIGHT
✳ B1	8	#5	STR	29'-8"	248
✳ E1	2	#7	STR	2'-6"	10
✳ E2	2	#7	STR	3'-0"	12
✳ E3	2	#7	STR	3'-6"	14
✳ E4	2	#7	STR	4'-0"	16
✳ E5	2	#7	STR	4'-4"	18
✳ F1	2	#6	STR	2'-0"	6
✳ F2	2	#6	STR	3'-5"	10
✳ F3	2	#6	STR	3'-9"	11
✳ S4	39	#5	2	5'-8"	231
✳ EPOXY COATED REINFORCING STEEL			LBS.		576
CLASS "AA" CONCRETE			C.Y.		4.0
CONCRETE PARAPET			L.F.		30.00

NOTES

ALL PRESTRESSING STRANDS SHALL BE 7-WIRE LOW RELAXATION GRADE 270 STRANDS AND SHALL CONFORM TO AASHTO M203 EXCEPT FOR SAMPLING REQUIREMENTS WHICH SHALL BE IN ACCORDANCE WITH THE STANDARD SPECIFICATIONS.

ALL REINFORCING STEEL CAST WITH THE CORED SLAB SECTIONS SHALL BE GRADE 60 AND SHALL BE INCLUDED IN THE UNIT PRICE BID FOR PRESTRESSED CONCRETE CORED SLABS.

RECESSES FOR TRANSVERSE STRANDS SHALL BE GROUTED AFTER THE TENSIONING OF THE STRANDS.

THE 2½" Ø DOWEL HOLES AT FIXED ENDS OF SLAB SECTIONS SHALL BE FILLED WITH NON-SHRINK GROUT.

THE BACKER RODS SHALL CONFORM TO THE REQUIREMENTS OF TYPE M BOND BREAKER. SEE SECTION 1028 OF THE STANDARD SPECIFICATIONS.

WHEN CORED SLABS ARE CAST, AN INTERNAL HOLD-DOWN SYSTEM SHALL BE EMPLOYED TO PREVENT VOIDS FROM RISING OR MOVING SIDEWAYS. AT LEAST SIX WEEKS PRIOR TO CASTING CORED SLABS, THE CONTRACTOR SHALL SUBMIT TO THE ENGINEER FOR REVIEW AND COMMENT, DETAILED DRAWINGS OF THE PROPOSED HOLD-DOWN SYSTEM. IN ADDITION TO STRUCTURAL DETAILS, LOCATION AND SPACING OF THE HOLD-DOWNS SHALL BE INDICATED.

ALL REINFORCING STEEL IN THE CONCRETE END POSTS AND PARAPET SHALL BE EPOXY COATED.

PRESTRESSING STRANDS SHALL BE CUT FLUSH WITH THE CORED SLAB UNIT ENDS.

APPLY EPOXY PROTECTIVE COATING TO CORED SLAB UNIT ENDS.

GROOVED CONTRACTION JOINTS, ½" IN DEPTH, SHALL BE TOOLED IN ALL EXPOSED FACES OF THE PARAPET AND END POST AND IN ACCORDANCE WITH ARTICLE 825-10(B) OF THE STANDARD SPECIFICATIONS. A CONTRACTION JOINT SHALL BE LOCATED AT EACH THIRD POINT BETWEEN PARAPET EXPANSION JOINTS. ONLY ONE CONTRACTION JOINT IS REQUIRED AT MIDPOINT OF PARAPET SEGMENTS LESS THAN 20 FEET IN LENGTH AND NO CONTRACTION JOINTS ARE REQUIRED FOR THOSE SEGMENTS LESS THAN 10 FEET IN LENGTH.

FLAME CUTTING OF THE TRANSVERSE POST-TENSIONING STRAND IS NOT ALLOWED.

THE TRANSFER OF LOAD FROM THE ANCHORAGES TO THE CORED SLAB UNIT SHALL BE DONE WHEN THE CONCRETE HAS REACHED A COMPRESSIVE STRENGTH OF NOT LESS THAN THE REQUIRED STRENGTH SHOWN IN THE "CONCRETE RELEASE STRENGTH" TABLE.

FOR GROUT FOR STRUCTURES, SEE SPECIAL PROVISIONS.

THE PERMITTED THREADED INSERTS ARE DETAILED AS AN OPTION FOR THE CONTRACTOR TO ATTACH FALSEWORK AND FORMWORK DURING CONSTRUCTION.

THE PERMITTED THREADED INSERTS IN THE EXTERIOR UNITS SHALL BE SIZED BY THE CONTRACTOR, SPACED AT 4'-0" CENTERS AND GALVANIZED IN ACCORDANCE WITH SECTION 1076 OF THE STANDARD SPECIFICATIONS. STAINLESS STEEL THREADED INSERTS MAY BE USED AS AN ALTERNATE.

THE PERMITTED THREADED INSERTS SHALL BE GROUTED BY THE CONTRACTOR IMMEDIATELY FOLLOWING REMOVAL OF THE FALSEWORK.

THE COST OF THE PERMITTED THREADED INSERTS SHALL BE INCLUDED IN THE PRICE BID FOR THE PRECAST UNITS.

CONCRETE RELEASE STRENGTH

UNIT	PSI
30' UNITS	4000

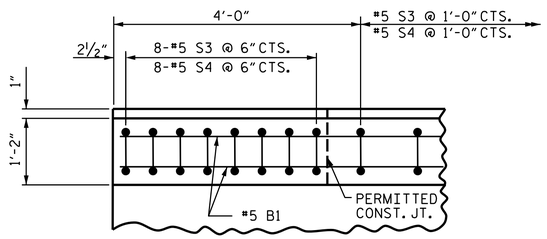

PLAN OF PARAPET

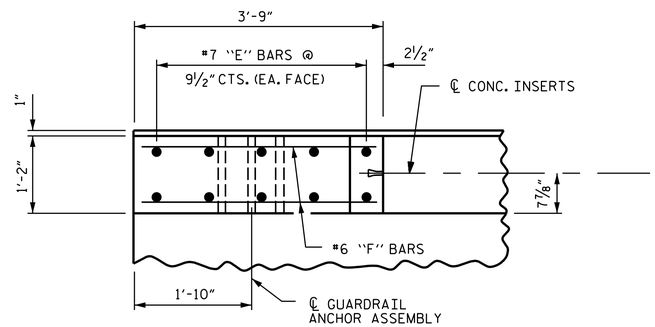

PLAN OF END POST

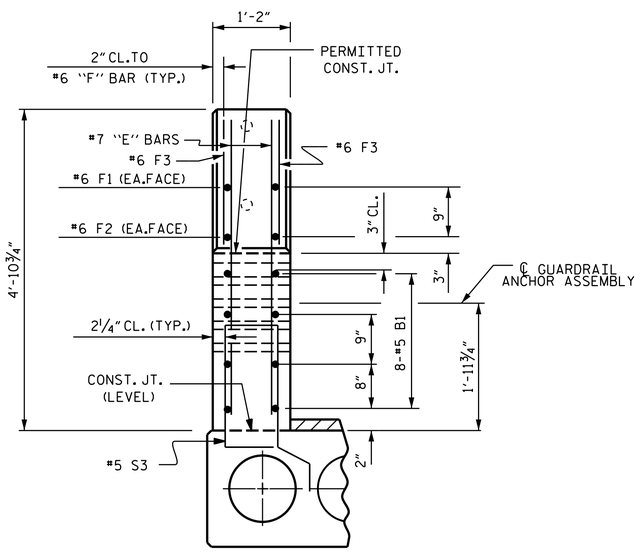

ELEVATION

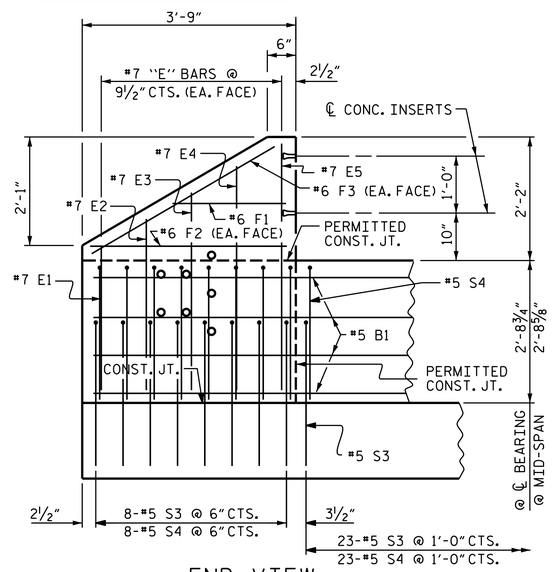

END VIEW

PARAPET AND END POST FOR TWO BAR RAIL

GRADE 270 STRANDS

	0.6" Ø L.R.
AREA (SQUARE INCHES)	0.217
ULTIMATE STRENGTH (LBS. PER STRAND)	58,600
APPLIED PRESTRESS (LBS. PER STRAND)	43,950

PROJECT NO. BP2.R001.1
CRAVEN COUNTY
STATION: 20+61.00 -L-

SHEET 3 OF 3

STATE OF NORTH CAROLINA
DEPARTMENT OF TRANSPORTATION
RALEIGH

STANDARD

3'-0" X 1'-9"
PRESTRESSED CONCRETE
CORED SLAB UNIT
SPAN 'A'

ASSEMBLED BY : CT STONE	DATE : 5/4/22
CHECKED BY : TG ZEBLO	DATE : 5/5/22
DRAWN BY : DGE 5/09	REV. 5/18 MAA/THC
CHECKED BY : BCH 6/09	

PLAN PREPARED BY:

Founded 1998

ALPHA & OMEGA GROUP
CIVIL | STRUCTURAL | WATER RESOURCES

ALPHA AND OMEGA GROUP, PC
4601 LAKE BOONE TRAIL, SUITE 3C, RALEIGH, NC 27607

Firm License No. C-1684 www.aogroup.com
A&O PROJECT NO. : 2021.058

DocuSigned by:
A8C76487F8049C
10/13/2022

DOCUMENT NOT CONSIDERED FINAL UNLESS ALL SIGNATURES COMPLETED

REVISIONS						SHEET NO.
NO.	BY:	DATE:	NO.	BY:	DATE:	S-9
1			3			TOTAL SHEETS
2			4			25

$$$$$$SYSTIME$$$$$
$$$$$$$$$$$$$$$$$$$$DGN$$$$$$$$$$$$$$$$$$$$$$$$
$$$$USERNAME$$$$

DocuSign Envelope ID: 020DBFA3-ACF3-48F2-AF52-DEB874E978BC

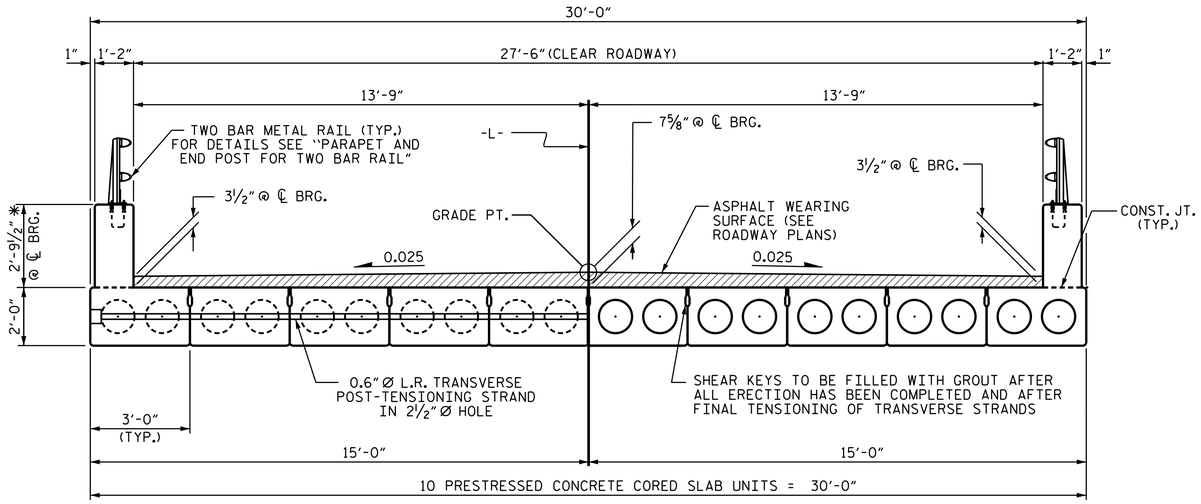

HALF SECTION
AT INTERMEDIATE DIAPHRAGMS

HALF SECTION
THROUGH VOIDS

TYPICAL SECTION

* - THE MAXIMUM PARAPET HEIGHT AND ASPHALT THICKNESS IS SHOWN. THE HEIGHT OF THE PARAPET AND ASPHALT THICKNESS VARIES WHILE THE TOP OF THE PARAPET FOLLOWS THE PROFILE OF THE GUTTERLINE. FOR PARAPET HEIGHT DETAILS AND ASPHALT THICKNESS SEE THE "PARAPET AND END POST FOR TWO BAR RAIL" DETAIL.

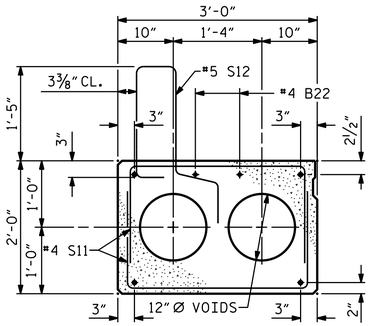

EXTERIOR SLAB SECTION

(FOR PRESTRESSED STRAND LAYOUT, SEE INTERIOR SLAB SECTION.)

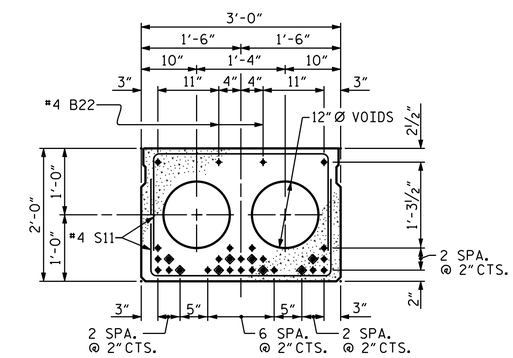

INTERIOR SLAB SECTION (70' UNIT)

(28 STRANDS REQUIRED)

0.6'' Ø LOW RELAXATION STRAND LAYOUT

◈ BOND SHALL BE BROKEN ON THESE STRANDS FOR A DISTANCE OF 12'-0" FROM END OF CORED SLAB UNIT. SEE STANDARD SPECIFICATIONS, ARTICLE 1078-7.

DEBONDING LEGEND

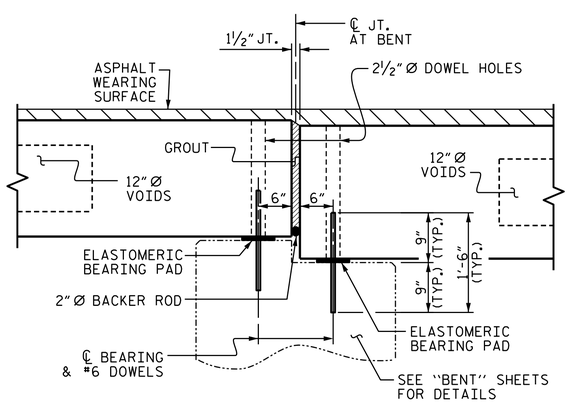

SECTION AT BENT No. 1

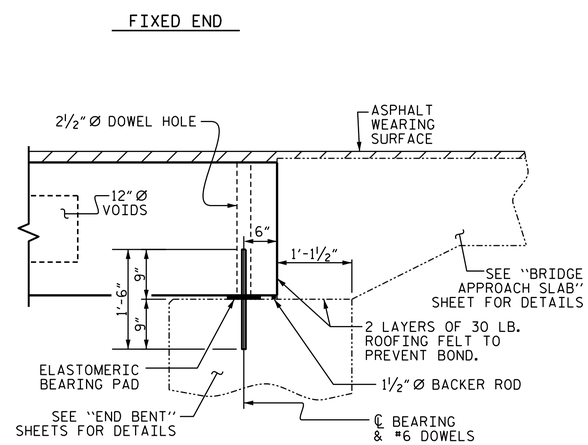

SECTION AT END BENT

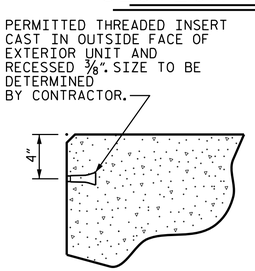

THREADED INSERT DETAIL

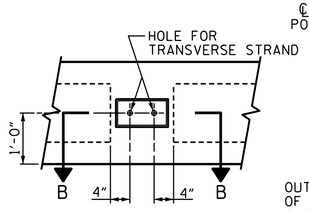

ELEVATION VIEW

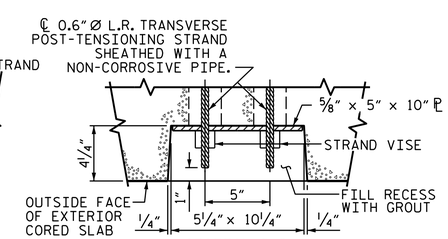

SECTION B-B

GROUTED RECESS AT END OF POST-TENSIONED STRAND•CORED SLABS

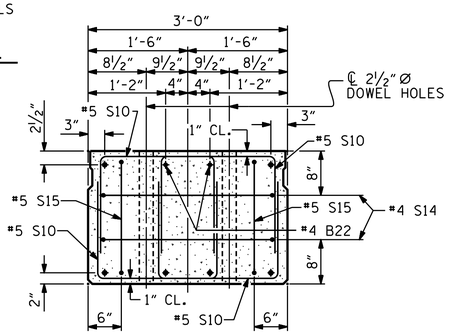

END ELEVATION

SHOWING PLACEMENT OF DOUBLE STIRRUPS AND LOCATION OF DOWEL HOLES. (STRAND LAYOUT NOT SHOWN.) INTERIOR SLAB UNIT SHOWN-EXTERIOR SLAB UNIT SIMILAR EXCEPT SHEAR KEY LOCATION.

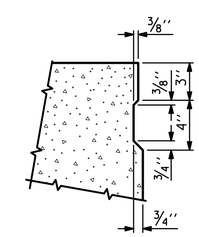

SHEAR KEY DETAIL

NOTE: OMIT SHEAR KEY ON OUTSIDE FACE OF EXTERIOR CORED SLABS.

PROJECT NO. BP2.R001.1
CRAVEN COUNTY
STATION: 20+61.00 -L-

SHEET 1 OF 3

STATE OF NORTH CAROLINA
DEPARTMENT OF TRANSPORTATION
RALEIGH

STANDARD
3'-0'' X 2'-0''
PRESTRESSED CONCRETE CORED SLAB UNIT
SPAN 'B'

PLAN PREPARED BY:
Founded 1998
ALPHA & OMEGA GROUP
CIVIL | STRUCTURAL | WATER RESOURCES
ALPHA AND OMEGA GROUP, PC
4601 LAKE BOONE TRAIL, SUITE 3C, RALEIGH, NC 27607
Firm License No. C-1684 www.aogroup.com
A&O PROJECT NO. : 2021.058

NORTH CAROLINA PROFESSIONAL SEAL 022997 ENGINEER JAMES J. BARCOS
DocuSigned by: A8C764871F8049C...
10/13/2022

DOCUMENT NOT CONSIDERED FINAL UNLESS ALL SIGNATURES COMPLETED

ASSEMBLED BY : CT STONE	DATE : 5/4/22
CHECKED BY : TG ZEBLO	DATE : 5/5/22
DRAWN BY : MAA 6/10	REV. 8/14 MAA/TMG
CHECKED BY : MKT 7/10	

REVISIONS								SHEET NO.
NO.	BY:	DATE:	NO.	BY:	DATE:			S-10
1			3					TOTAL SHEETS
2			4					25

STD. NO. 24PCS4_30_90S

$$$$$$SYSTIME$$$$$
$$$$$$$$$$$$$$$$$$$$$$DGN$$$$$$$$$$$$$$$$$$$$$$$$
$$$$USERNAME$$$$

DocuSign Envelope ID: 56D11779-4A60-4B22-B035-F243D3D8E939

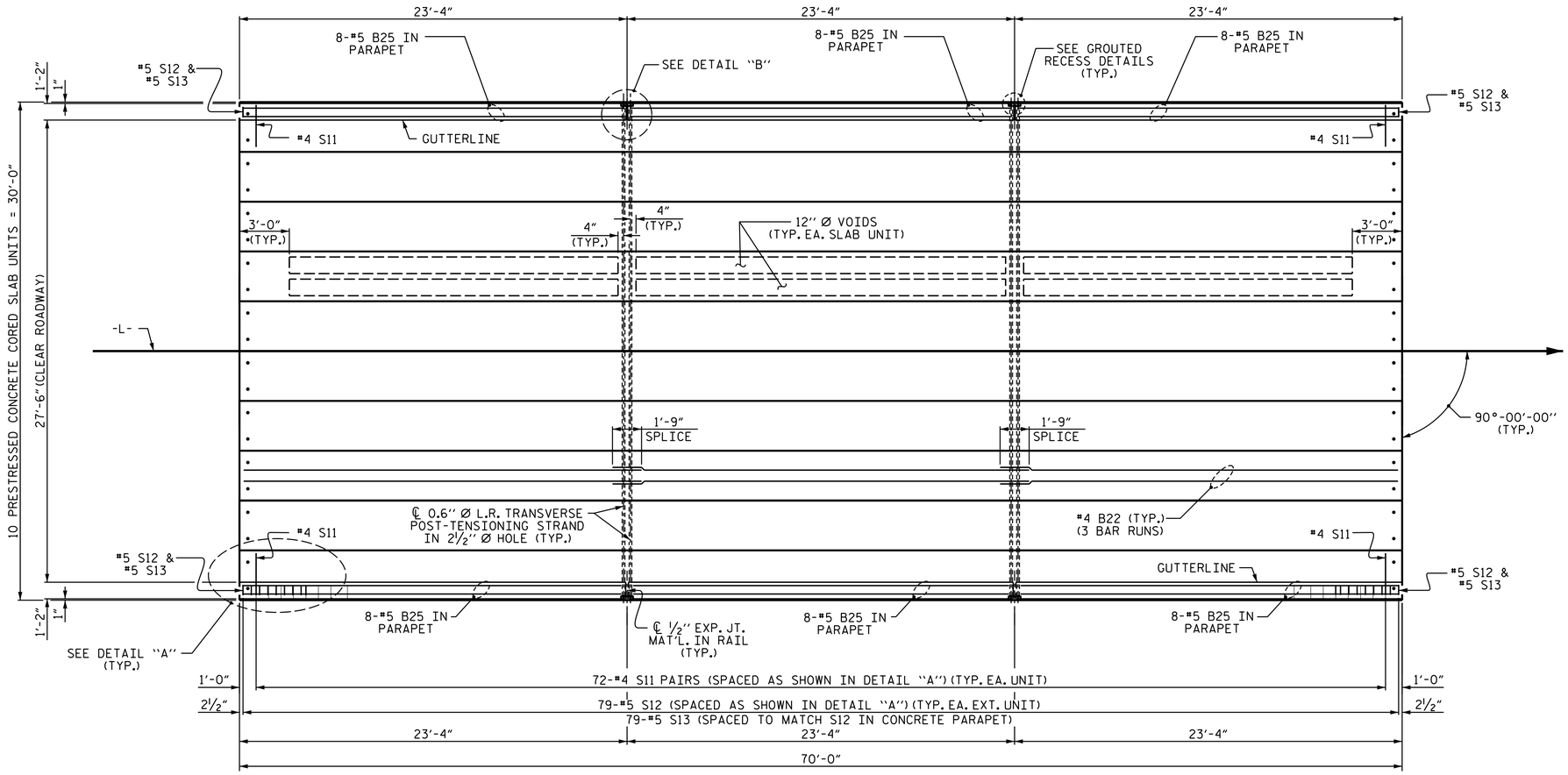

PLAN OF UNIT

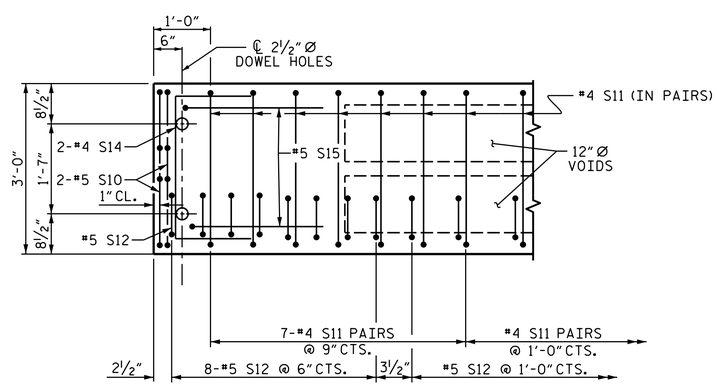

DETAIL "A"

(TYPICAL EACH END OF UNIT)
NOTE: EXTERIOR UNIT SHOWN - INTERIOR UNIT SIMILAR EXCEPT OMIT #5 S12 BARS.

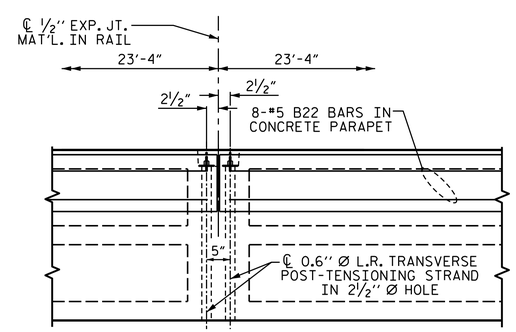

DETAIL "B"

#4 S11 BARS MAY BE SHIFTED AS NECESSARY TO MAINTAIN 1" CLEAR TO GROUTED RECESS AND 2½" Ø TRANSVERSE POST-TENSIONING STRAND HOLES

ASSEMBLED BY : CT STONE	DATE : 5/4/22		
CHECKED BY : TG ZEBLO	DATE : 5/5/22		
DRAWN BY : MAA	6/10	REV. 12/5/11	MAA/AAC
CHECKED BY : MKT	7/10	REV. 8/14	MAA/TMG

PLAN PREPARED BY:

ALPHA & OMEGA GROUP
CIVIL | STRUCTURAL | WATER RESOURCES
Founded 1998

ALPHA AND OMEGA GROUP, PC
4601 LAKE BOONE TRAIL, SUITE 3C, RALEIGH, NC 27607
Firm License No. C-1684 www.aogroup.com
A&O PROJECT NO. : 2021.058

DocuSigned by:
A8C764871F8049C...
NORTH CAROLINA PROFESSIONAL SEAL 022997 ENGINEER JAMES J. BARCO
10/13/2022

DOCUMENT NOT CONSIDERED FINAL UNLESS ALL SIGNATURES COMPLETED

PROJECT NO. BP2.R001.1
CRAVEN COUNTY
STATION: 20+61.00 -L-

SHEET 2 OF 3

STATE OF NORTH CAROLINA
DEPARTMENT OF TRANSPORTATION
RALEIGH

PLAN OF 70' UNIT
27'-6" CLEAR ROADWAY
90° SKEW
SPAN 'B'

REVISIONS							
NO.	BY:	DATE:	NO.	BY:	DATE:	SHEET NO.	S-11
1			3			TOTAL SHEETS	25
2			4				

STD. NO. 24PCS_30_90S_70L

$$$$$$SYSTIME$$$$$
$$$$$$$$$$$$$$$$$$$$$$DGN$$$$$$$$$$$$$$$$$$$$$$$$
$$$$USERNAME$$$$

DocuSign Envelope ID: 21D85391-2F53-4C61-A1AB-B02C498E2A9E

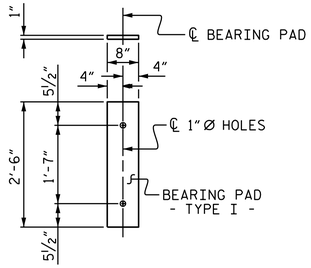

FIXED END
(TYPE I - 20 REQ'D)

ELASTOMERIC BEARING DETAILS

ELASTOMER IN ALL BEARINGS SHALL BE 60 DUROMETER HARDNESS.

BILL OF MATERIAL FOR ONE 70' CORED SLAB UNIT

				EXTERIOR UNIT		INTERIOR UNIT	
BAR	NUMBER	SIZE	TYPE	LENGTH	WEIGHT	LENGTH	WEIGHT
B22	6	#4	STR	24'-6"	98	24'-6"	98
S10	8	#5	3	4'-9"	40	4'-9"	40
S11	144	#4	3	5'-10"	561	5'-10"	561
✱S12	79	#5	1	5'-9"	474		
S14	4	#4	3	5'-7"	15	5'-7"	15
S15	4	#5	3	7'-1"	30	7'-1"	30
REINFORCING STEEL			LBS.		744		744
✱EPOXY COATED REINFORCING STEEL			LBS.		474		
7000 P.S.I. CONCRETE			CU. YDS.		11.8		11.8
0.6"Ø L.R. STRANDS			No.		28		28

BAR TYPES

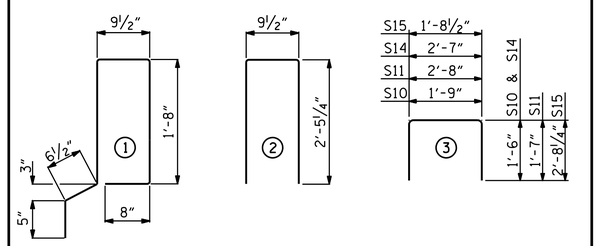

ALL BAR DIMENSIONS ARE OUT TO OUT.

GUTTERLINE ASPHALT THICKNESS & PARAPET HEIGHT

	ASPHALT OVERLAY THICKNESS @ MID-SPAN	PARAPET HEIGHT @ MID-SPAN
70' UNITS	2"	2'-8"

CORED SLABS REQUIRED

	NUMBER	LENGTH	TOTAL LENGTH
70' UNIT			
EXTERIOR C.S.	2	70'-0"	140'-0"
INTERIOR C.S.	8	70'-0"	560'-0"
TOTAL	10		700'-0"

DEAD LOAD DEFLECTION AND CAMBER

	3'-0" x 2'-0"
70' CORED SLAB UNIT	0.6"Ø L.R. STRAND
CAMBER (SLAB ALONE IN PLACE)	2¼" ↑
DEFLECTION DUE TO SUPERIMPOSED DEAD LOAD✱✱	¾" ↓
FINAL CAMBER	1½" ↑

✱✱ INCLUDES FUTURE WEARING SURFACE

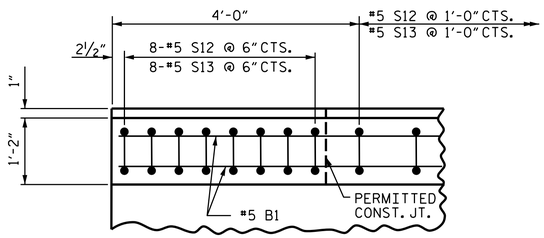

PLAN OF PARAPET

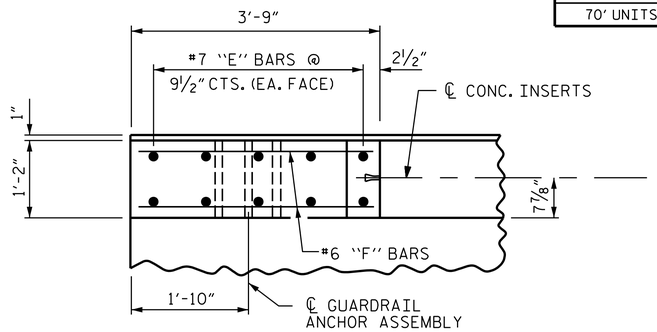

PLAN OF END POST

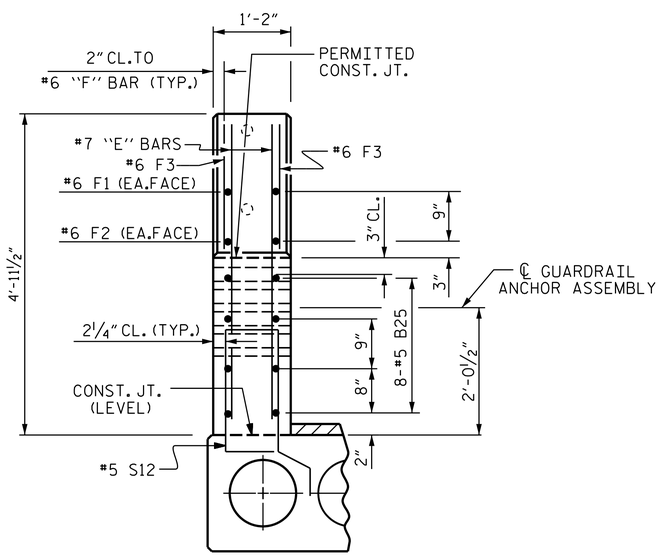

ELEVATION

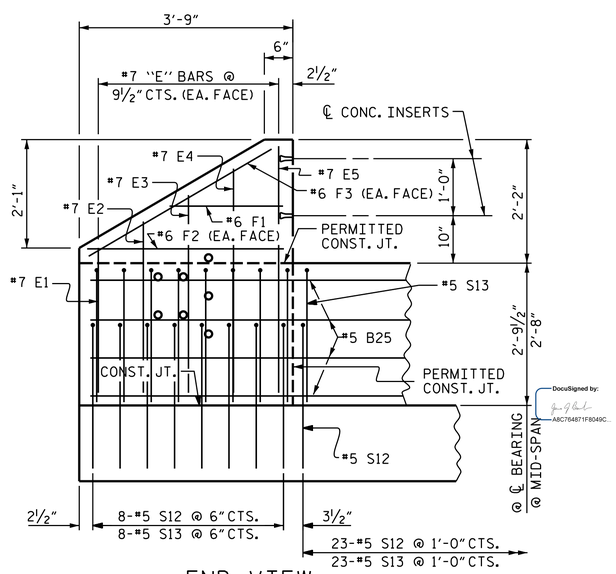

END VIEW

PARAPET AND END POST FOR TWO BAR RAIL

BILL OF MATERIAL FOR PARAPET AND ONE END POST

BAR	NUMBER	SIZE	TYPE	LENGTH	WEIGHT
✱B25	24	#5	STR	23'-0"	576
✱ E1	2	#7	STR	2'-6"	10
✱ E2	2	#7	STR	3'-0"	12
✱ E3	2	#7	STR	3'-6"	14
✱ E4	2	#7	STR	4'-0"	16
✱ E5	2	#7	STR	4'-4"	18
✱ F1	2	#6	STR	2'-0"	6
✱ F2	2	#6	STR	3'-5"	10
✱ F3	2	#6	STR	3'-9"	11
✱S13	79	#5	2	5'-8"	467
✱EPOXY COATED REINFORCING STEEL			LBS.		1140
CLASS "AA" CONCRETE			C.Y.		9.0
CONCRETE PARAPET			L.F.		70.00

NOTES

ALL PRESTRESSING STRANDS SHALL BE 7-WIRE LOW RELAXATION GRADE 270 STRANDS AND SHALL CONFORM TO AASHTO M203 EXCEPT FOR SAMPLING REQUIREMENTS WHICH SHALL BE IN ACCORDANCE WITH THE STANDARD SPECIFICATIONS.

ALL REINFORCING STEEL CAST WITH THE CORED SLAB SECTIONS SHALL BE GRADE 60 AND SHALL BE INCLUDED IN THE UNIT PRICE BID FOR PRESTRESSED CONCRETE CORED SLABS.

RECESSES FOR TRANSVERSE STRANDS SHALL BE GROUTED AFTER THE TENSIONING OF THE STRANDS.

THE 2½"Ø DOWEL HOLES AT FIXED ENDS OF SLAB SECTIONS SHALL BE FILLED WITH NON-SHRINK GROUT.

THE BACKER RODS SHALL CONFORM TO THE REQUIREMENTS OF TYPE M BOND BREAKER. SEE SECTION 1028 OF THE STANDARD SPECIFICATIONS.

WHEN CORED SLABS ARE CAST, AN INTERNAL HOLD-DOWN SYSTEM SHALL BE EMPLOYED TO PREVENT VOIDS FROM RISING OR MOVING SIDEWAYS. AT LEAST SIX WEEKS PRIOR TO CASTING CORED SLABS, THE CONTRACTOR SHALL SUBMIT TO THE ENGINEER FOR REVIEW AND COMMENT, DETAILED DRAWINGS OF THE PROPOSED HOLD-DOWN SYSTEM. IN ADDITION TO STRUCTURAL DETAILS, LOCATION AND SPACING OF THE HOLD-DOWNS SHALL BE INDICATED.

THE TRANSFER OF LOAD FROM THE ANCHORAGES TO THE CORED SLAB UNIT SHALL BE DONE WHEN THE CONCRETE HAS REACHED A COMPRESSIVE STRENGTH OF NOT LESS THAN THE REQUIRED STRENGTH SHOWN IN THE "CONCRETE RELEASE STRENGTH" TABLE.

ALL REINFORCING STEEL IN CONCRETE END POST & PARAPET SHALL BE EPOXY COATED.

PRESTRESSING STRANDS SHALL BE CUT FLUSH WITH THE CORED SLAB UNIT ENDS.

APPLY EPOXY PROTECTIVE COATING TO CORED SLAB UNIT ENDS.

GROOVED CONTRACTION JOINTS, ½" IN DEPTH, SHALL BE TOOLED IN ALL EXPOSED FACES OF THE END POST AND PARAPET AND IN ACCORDANCE WITH ARTICLE 825-10(B) OF THE STANDARD SPECIFICATIONS. A CONTRACTION JOINT SHALL BE LOCATED AT EACH THIRD POINT BETWEEN PARAPET EXPANSION JOINTS. ONLY ONE CONTRACTION JOINT IS REQUIRED AT MIDPOINT OF PARAPET SEGMENTS LESS THAN 20 FEET IN LENGTH AND NO CONTRACTION JOINTS ARE REQUIRED FOR THOSE SEGMENTS LESS THAN 10 FEET IN LENGTH.

FLAME CUTTING OF THE TRANSVERSE POST-TENSIONING STRAND IS NOT ALLOWED.

MAINTAIN A SYMMETRIC TENSION FORCE BETWEEN EACH PAIR OF TRANSVERSE POST TENSIONING STRANDS IN THE DIAPHRAGM.

THE #4 S11 STIRRUPS MAY BE SHIFTED AS NECESSARY TO MAINTAIN 1" CLEAR TO THE GROUTED RECESS.

FOR GROUT FOR STRUCTURES, SEE SPECIAL PROVISIONS.

THE PERMITTED THREADED INSERTS ARE DETAILED AS AN OPTION FOR THE CONTRACTOR TO ATTACH FALSEWORK AND FORMWORK DURING CONSTRUCTION.

THE PERMITTED THREADED INSERTS IN THE EXTERIOR UNITS SHALL BE SIZED BY THE CONTRACTOR, SPACED AT 4'-0" CENTERS AND GALVANIZED IN ACCORDANCE WITH SECTION 1076 OF THE STANDARD SPECIFICATIONS. STAINLESS STEEL THREADED INSERTS MAY BE USED AS AN ALTERNATE.

THE PERMITTED THREADED INSERTS SHALL BE GROUTED BY THE CONTRACTOR IMMEDIATELY FOLLOWING REMOVAL OF THE FALSEWORK.

THE COST OF THE PERMITTED THREADED INSERTS SHALL BE INCLUDED IN THE PRICE BID FOR THE PRECAST UNITS.

CONCRETE RELEASE STRENGTH

UNIT	PSI
70' UNITS	5500

GRADE 270 STRANDS

	0.6"Ø L.R.
AREA (SQUARE INCHES)	0.217
ULTIMATE STRENGTH (LBS. PER STRAND)	58,600
APPLIED PRESTRESS (LBS. PER STRAND)	43,950

PROJECT NO. BP2.R001.1
CRAVEN COUNTY
STATION: 20+61.00 -L-

SHEET 3 OF 3

STATE OF NORTH CAROLINA
DEPARTMENT OF TRANSPORTATION
RALEIGH

STANDARD
3'-0" X 2'-0"
PRESTRESSED CONCRETE
CORED SLAB UNIT
SPAN 'B'

PLAN PREPARED BY:

ALPHA & OMEGA GROUP
CIVIL | STRUCTURAL | WATER RESOURCES
ALPHA AND OMEGA GROUP, PC
4601 LAKE BOONE TRAIL, SUITE 3C, RALEIGH, NC 27607
Firm License No. C-1684 www.aogroup.com
A&O PROJECT NO. : 2021.058

NORTH CAROLINA PROFESSIONAL ENGINEER SEAL 022097 JAMES J. BARCON
DocuSigned by: A8C764871F8049C...
10/13/2022

DOCUMENT NOT CONSIDERED FINAL UNLESS ALL SIGNATURES COMPLETED

REVISIONS							
NO.	BY:	DATE:	NO.	BY:	DATE:		
1			3				
2			4				

SHEET NO. S-12
TOTAL SHEETS 25

ASSEMBLED BY :	CT STONE	DATE :	5/4/22
CHECKED BY :	TG ZEBLO	DATE :	5/5/22
DRAWN BY :	MAA 6/10	REV. 5/18	MAA/THC
CHECKED BY :	MKT 7/10		

$$$$$$SYSTIME$$$$$
$$$$$$$$$$$$$$$$$$$$DGN$$$$$$$$$$$$$$$$$$$$$$$
$$$$USERNAME$$$$

STD. NO. 24PCS3_30_90S

DocuSign Envelope ID: 74A02B62-B132-4DA9-BB1A-0AACD658FC4D

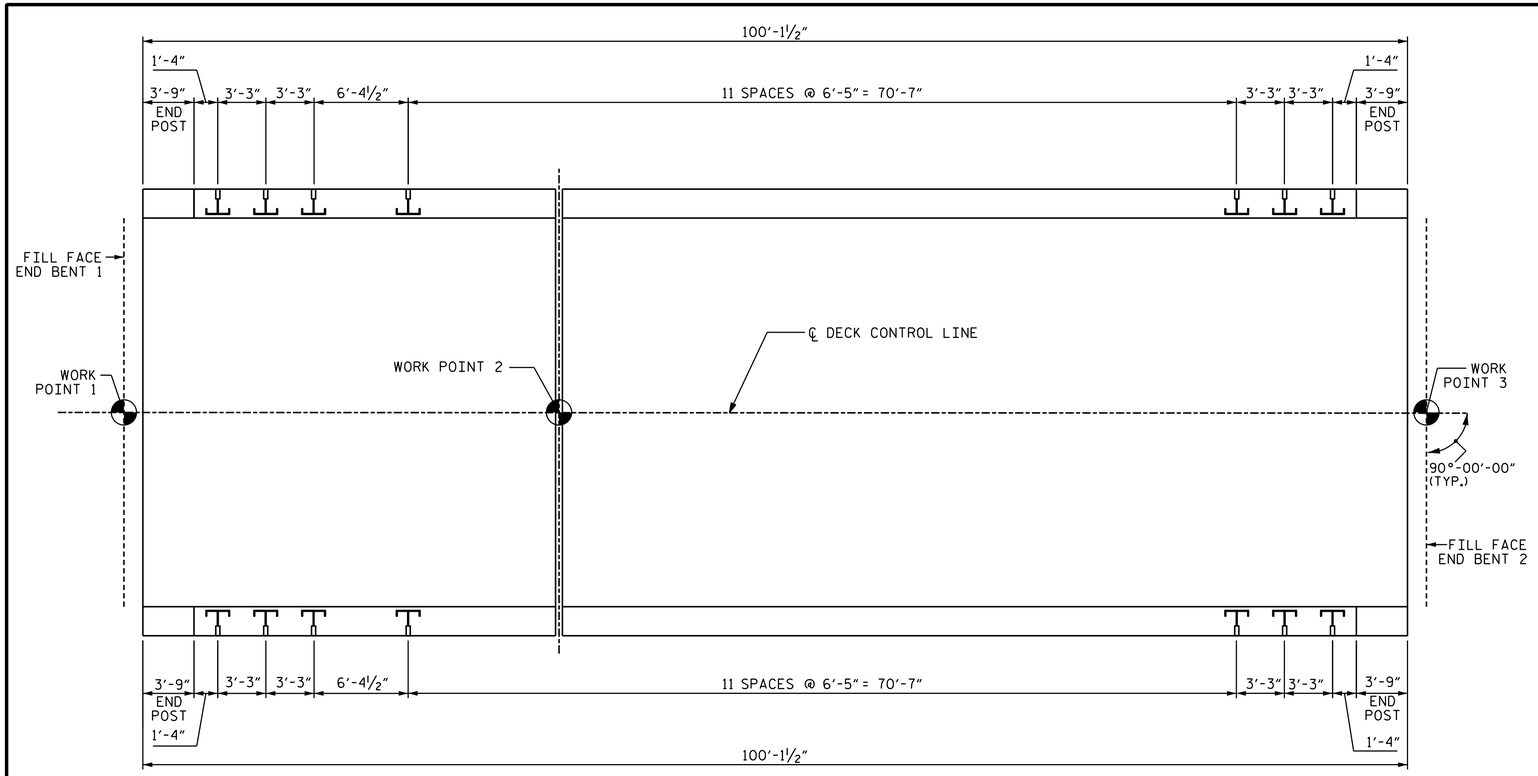

PLAN OF RAIL POST SPACINGS

NOTES

STRUCTURAL CONCRETE INSERT

THE STRUCTURAL CONCRETE INSERT ASSEMBLY SHALL CONSIST OF THE FOLLOWING COMPONENTS:

A. FERRULES SHALL BE MADE FROM STEEL MEETING THE REQUIREMENTS OF AASHTO M169, GRADE 12L14 AND SHALL HAVE A MINIMUM LENGTH OF THREADS OF 1½".

B. 1 - ¾" Ø X 1⅝" BOLT WITH WASHER. BOLT SHALL CONFORM TO THE REQUIREMENTS OF ASTM A307. BOLT AND WASHER SHALL BE GALVANIZED. (AT THE CONTRACTOR'S OPTION, STAINLESS STEEL BOLT AND WASHER MAY BE USED AS AN ALTERNATE FOR THE ¾" Ø X 1⅝" GALVANIZED BOLT AND WASHER. THEY SHALL CONFORM TO OR EXCEED THE MECHANICAL REQUIREMENTS OF ASTM A307. THE USE OF THIS ALTERNATE SHALL BE APPROVED BY THE ENGINEER.)

C. WIRE STRUT SHOWN IN THE CONCRETE INSERT ASSEMBLY DETAIL IS THE MINIMUM ALLOWABLE SIZE AND SHALL HAVE A MINIMUM TENSILE STRENGTH OF 100,000 PSI. AS AN OPTION, A 7/16" Ø WIRE STRUT WITH A MINIMUM TENSILE STRENGTH OF 90,000 PSI IS ACCEPTABLE.

NOTES

METAL RAIL TO END POST CONNECTION

THE METAL RAIL TO END POST CONNECTION SHALL CONSIST OF THE FOLLOWING COMPONENTS:

A. ½" PLATES SHALL CONFORM TO AASHTO M270 GRADE 36 AND SHALL BE GALVANIZED AFTER FABRICATION.

B. ¾" STRUCTURAL CONCRETE INSERT SHALL HAVE A WORKING LOAD SHEAR CAPACITY OF 4800 LBS. THE FERRULES SHALL ENGAGE A ¾"Ø X 1⅝" BOLT WITH 2" O.D. WASHER IN PLACE. THE ¾"Ø X 1⅝" BOLT SHALL HAVE N. C. THREADS.

C. CAP SCREWS FOR RAIL ATTACHMENT TO ANGLE SHALL CONFORM TO THE REQUIREMENTS OF ASTM F593 ALLOY 305 STAINLESS STEEL. CAP SCREWS TO BE CENTERED IN SLOTS AT 60°F.

D. STANDARD CLAMP BARS (SEE METAL RAIL SHEET).

E. ½" Ø PIPE SLEEVES (IF REQUIRED) TO BE GALVANIZED.

THE COST OF THE STANDARD CLAMP BARS AND CAP SCREWS USED IN THE METAL RAIL TO END POST CONNECTION SHALL BE INCLUDED IN THE UNIT CONTRACT PRICE BID FOR LINEAR FEET OF 1 OR 2 BAR METAL RAILS.

THE ¾" STRUCTURAL CONCRETE INSERT WITH BOLT SHALL BE ASSEMBLED IN THE SHOP.

THE COST OF THE ¾" STRUCTURAL CONCRETE INSERT ASSEMBLY, AND THE ½" PLATES COMPLETE IN PLACE SHALL BE INCLUDED IN THE VARIOUS PAY ITEMS.

THE CONTRACTOR, AT HIS OPTION, MAY USE AN ADHESIVE BONDING SYSTEM IN LIEU OF THE STRUCTURAL CONCRETE INSERT EMBEDDED IN THE END POST. IF THE ADHESIVE BONDING SYSTEM IS USED, THE ¾" Ø X 1⅝" BOLT WITH WASHER SHALL BE REPLACED WITH A ¾"Ø X 6½" BOLT AND 2" O.D. WASHER. ALL SPECIFICATIONS THAT APPLY TO THE ¾" Ø X 1⅝" BOLT SHALL APPLY TO THE ¾"Ø X 6 ½" BOLT. FIELD TESTING OF THE ADHESIVE BONDING SYSTEM IS NOT REQUIRED.

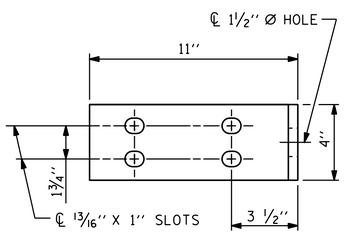

ELEVATION

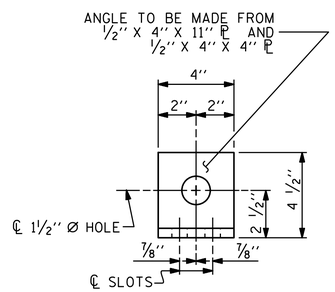

END VIEW (FIX AND EXP.)

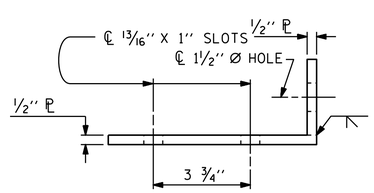

TOP VIEW

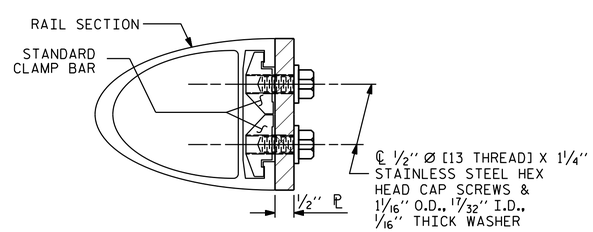

SECTION H-H (FIX)

FIXED

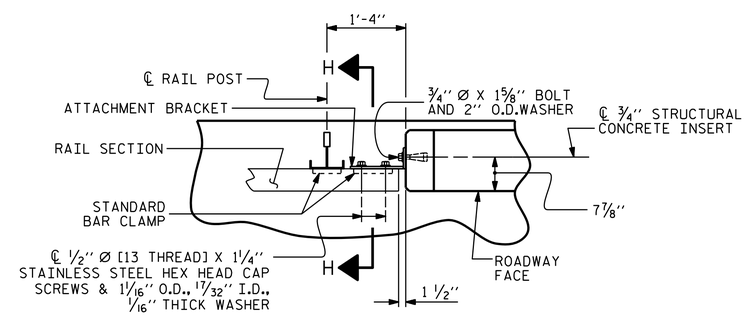

PLAN - RAIL AND END POST

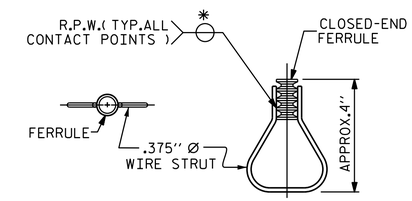

STRUCTURAL CONCRETE INSERT

* EACH WELDED ATTACHMENT OF WIRE TO FERRULE SHALL DEVELOP THE TENSILE STRENGTH OF THE WIRE.

PROJECT NO. BP2.R001.1

CRAVEN COUNTY

STATION: 20+61.00 -L-

DETAILS FOR ATTACHING METAL RAIL TO END POST

ASSEMBLED BY : CT STONE	DATE :5/4/2022	
CHECKED BY : TG ZEBLO	DATE :5/5/2022	
DRAWN BY : FCJ 1/88	REV. 5/1/06	TLA/GM
CHECKED BY : CRK 3/89	REV. 10/1/11	MAA/GM
	REV. 12/17	MAA/THC

$$$$$$$SYSTIME$$$$$
$$$$$$$$$$$$$$$$$$$$$$$$DGN$$$$$$$$$$$$$$$$$$$$$$$$$
$$$$USERNAME$$$$

PLAN PREPARED BY:

ALPHA & OMEGA GROUP
CIVIL | STRUCTURAL | WATER RESOURCES
ALPHA AND OMEGA GROUP, PC
4601 LAKE BOONE TRAIL, SUITE 3C, RALEIGH, NC 27607
Firm License No. C-1684 www.aogroup.com
A&O PROJECT NO. : 2021.058

NORTH CAROLINA PROFESSIONAL SEAL 022997 ENGINEER JAMES J. BARCONE
DocuSigned by: AAC7646717F8049C...
10/13/2022

DOCUMENT NOT CONSIDERED FINAL UNLESS ALL SIGNATURES COMPLETED

STATE OF NORTH CAROLINA
DEPARTMENT OF TRANSPORTATION
RALEIGH

STANDARD

RAIL POST SPACINGS AND END OF RAIL DETAILS

FOR ONE OR TWO BAR METAL RAILS

REVISIONS								SHEET NO.
NO.	BY:	DATE:	NO.	BY:	DATE:			S-13
1			3					TOTAL SHEETS
2			4					25

STD. NO. BMR2

DocuSign Envelope ID: AFAEA142-4E88-4245-B09E-8D822C533B66

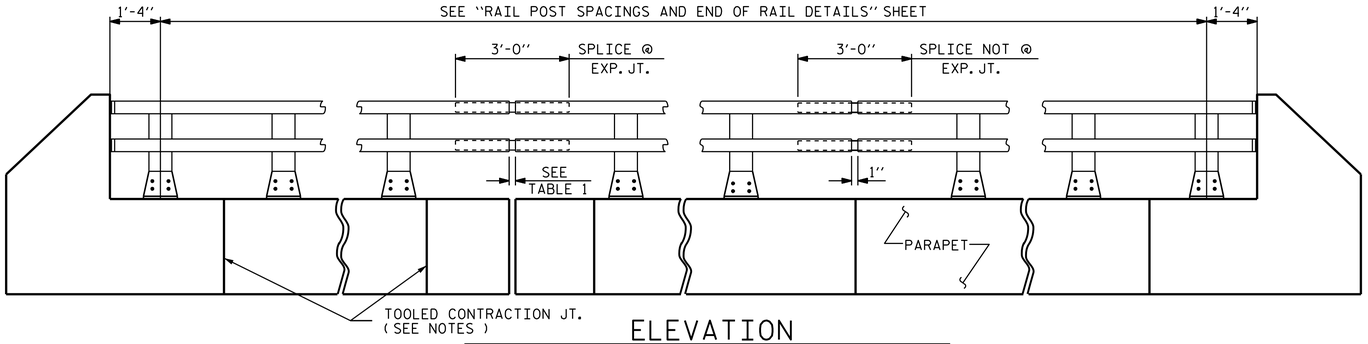

ELEVATION

NOTE : FOR ATTACHMENT OF METAL RAIL TO END POST, SEE STANDARD NO. BMR2.

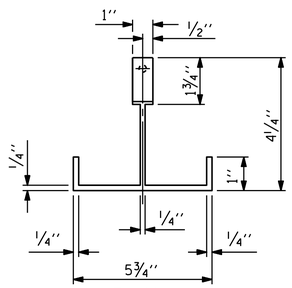

PLAN

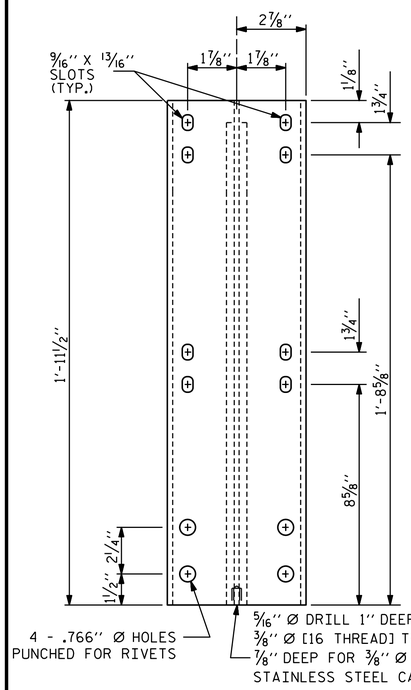

FRONT ELEVATION

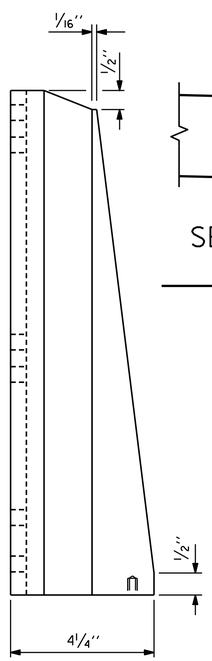

SIDE ELEVATION

DETAILS OF POST

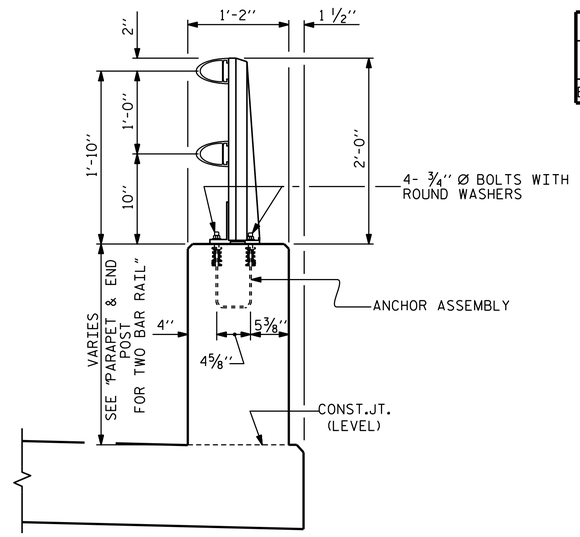

SECTION THRU PARAPET AND RAIL

TABLE 1	
℄ EXP. JT. @	RAIL OPENING
BENT 1	1 1/2"

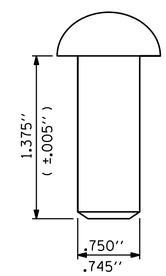

RIVET DETAIL

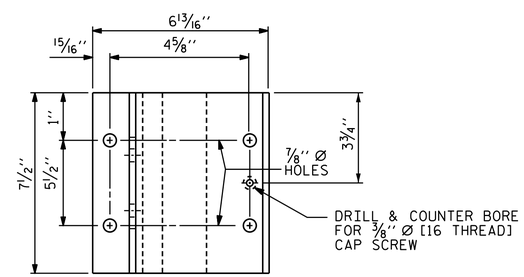

PLAN

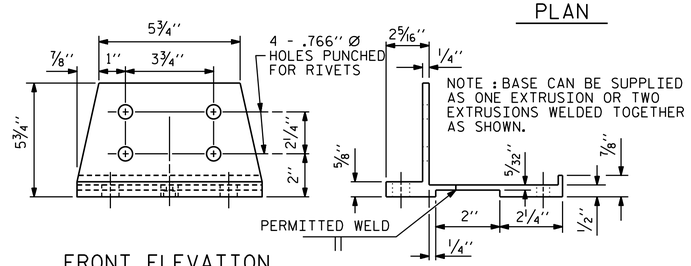

FRONT ELEVATION

SIDE ELEVATION

POST BASE DETAILS

NOTES

AT THE CONTRACTOR'S OPTION, METAL RAIL MAY BE EITHER ALUMINUM OR GALVANIZED STEEL IN ACCORDANCE WITH THE REQUIREMENTS OF THE GENERAL NOTES AND THE FOLLOWING SPECIFICATIONS FOR THE ALTERNATE MATERIALS; HOWEVER, THE CONTRACTOR WILL BE REQUIRED TO USE THE SAME RAIL MATERIAL ON ALL STRUCTURES ON THE PROJECT FOR WHICH METAL RAIL IS DESIGNATED.

UNLESS OTHERWISE REQUIRED IN THE CONTRACT DOCUMENTS, THE CONTRACTOR HAS THE OPTION TO USE AN ALTERNATE TO THE 2 BAR METAL RAIL. THE ALTERNATE RAIL SHALL MEET THE REQUIREMENTS OF THE AASHTO LRFDBRIDGE DESIGN SPECIFICATIONS AND MUST BE LISTED ON THE DEPARTMENT'S APPROVED PRODUCTS LIST (APL) UNDER "2 BAR METAL RAIL ALTERNATE". ADJUSTMENTS TO THE CONCRETE PARAPET WILL NOT BE ALLOWED.

ALUMINUM RAILS

MATERIAL FOR POSTS, BASES AND RAILS, EXPANSION BARS AND CLAMP BARS SHALL BE ASTM B-221 ALLOY 6061-T6.

MATERIAL FOR RIVETS SHALL BE ASTM B316 ALLOY 6061-T6. RIVETS SHALL BE STANDARD BUTTON HEAD AND CONE POINT COLD DRIVEN AS PER DRAWING.

THE BASE OF RAIL POSTS, OR ANY OTHER ALUMINUM SURFACE IN CONTACT WITH CONCRETE SHALL BE THOROUGHLY COATED WITH AN ALUMINUM IMPREGNATED CAULKING COMPOUND OF APPROVED QUALITY.

MATERIAL FOR SHIMS TO BE ASTM B209 ALLOY 6061-T6.

GENERAL NOTES

RAILING SHALL BE CONTINUOUS FROM END POST TO END POST OF BRIDGE. EACH JOINT IN RAIL LENGTH SHALL BE SPLICED AS DETAILED. PANEL LENGTHS OF RAIL SHALL BE ATTACHED TO A MINIMUM OF THREE POSTS.

FOR END OF RAIL TO CLEAR FACE OF CONCRETE END POST DIMENSION, SEE STANDARD NO. BMR2.

CAP SCREWS SHALL BE ASTM F593 ALLOY 305 STAINLESS STEEL. WASHERS SHALL MEET THE REQUIREMENTS OF ASTM F844 EXCEPT THEY SHALL BE MADE FROM ALLOY 304 STAINLESS STEEL.

CERTIFIED MILL REPORTS ARE REQUIRED FOR RAILS AND POSTS. SHOP INSPECTION IS NOT REQUIRED.

METAL RAIL POSTS SHALL BE SET NORMAL TO CURB GRADE.

METHOD OF MEASUREMENT FOR METAL RAILS: FOR LENGTH OF METAL RAILS TO BE PAID FOR, SEE THE STANDARD SPECIFICATIONS.

CURVED RAIL USAGE: WHERE RAILS ARE TO BE USED ON BRIDGES ON HORIZONTAL AND/OR VERTICAL CURVATURE THE CONTRACTOR MAY, AT HIS OPTION, HAVE THE REQUIRED CURVATURE IN THE RAIL FORMED IN THE SHOP OR IN THE FIELD. IN EITHER EVENT, THE RAIL SHALL CONFORM WITHOUT BUCKLING OR KINKING TO THE REQUIRED CURVATURE IN A UNIFORM MANNER ACCEPTABLE TO THE ENGINEER.

TO INSURE FUTURE IDENTIFICATION OF THE FABRICATOR, A PERMANENT IDENTIFYING MARK SHALL BE PLACED ON EACH POST. THE METHOD OF MARKING AND LOCATION SHALL BE SUCH THAT IT DOES NOT DETRACT FROM THE APPEARANCE OF THE POST, BUT REMAINS VISIBLE AFTER RAIL PLACEMENT.

SHIMS SHALL BE USED AS NECESSARY FOR POST ALIGNMENT.

ALLOY 6351-T5 MAY BE SUBSTITUTED FOR ALLOY 6061-T6 WHERE APPLICABLE.

MINOR VARIATIONS IN DETAILS OF METAL RAIL WILL BE CONSIDERED. DETAILS OF SUCH VARIATIONS, IF DESIRED, SHALL BE SUBMITTED FOR APPROVAL.

GROOVED CONTRACTION JOINTS, 1/2" IN DEPTH, SHALL BE TOOLED IN ALL EXPOSED FACES OF THE PARAPET AND IN ACCORDANCE WITH ARTICLE 825-10(B) OF THE STANDARD SPECIFICATIONS. A CONTRACTION JOINT SHALL BE LOCATED AT EACH THIRD POINT BETWEEN PARAPET EXPANSION JOINTS. ONLY ONE CONTRACTION JOINT IS REQUIRED AT MIDPOINT OF PARAPET SEGMENTS LESS THAN 20 FEET IN LENGTH AND NO CONTRACTION JOINTS ARE REQUIRED FOR THOSE SEGMENTS LESS THAN 10 FEET IN LENGTH.

PAY LENGTH = 185 LIN. FT.

PROJECT NO. BP2.R001.1
CRAVEN COUNTY
STATION: 20+61.00 -L-

SHEET 1 OF 2

STATE OF NORTH CAROLINA
DEPARTMENT OF TRANSPORTATION
RALEIGH

STANDARD

2 BAR METAL RAIL

ASSEMBLED BY : CT STONE	DATE : 5/4/22		
CHECKED BY : TG ZEBLO	DATE : 5/5/22		
DRAWN BY : EEM 6/94	REV. 10/1/11	MAA/GM	
CHECKED BY : RGW 6/94	REV. 6/13	MAA/GM	
	REV. 12/17	MAA/THC	

PLAN PREPARED BY:
Founded 1998
ALPHA & OMEGA GROUP
CIVIL | STRUCTURAL | WATER RESOURCES
ALPHA AND OMEGA GROUP, PC
4601 LAKE BOONE TRAIL, SUITE 3C, RALEIGH, NC 27607
Firm License No. C-1684 www.aogroup.com
A&O PROJECT NO. : 2021.058

NORTH CAROLINA PROFESSIONAL SEAL 022997 ENGINEER JAMES J. BARCONE
DocuSigned by:
A8C764871F804E0...
10/13/2022

DOCUMENT NOT CONSIDERED FINAL UNLESS ALL SIGNATURES COMPLETED

REVISIONS						
NO.	BY:	DATE:	NO.	BY:	DATE:	
1			3			
2			4			

SHEET NO. S-14
TOTAL SHEETS 25

STD. NO. BMR3

$$$$$$$SYSTIME$$$$$
$$$$$$$$$$$$$$$$$$$$$$$$$DGN$$$$$$$$$$$$$$$$$$$$$$$$
$$$$USERNAME$$$$

DocuSign Envelope ID: 74DBF141-E107-4FFF-9704-DD6450097E99

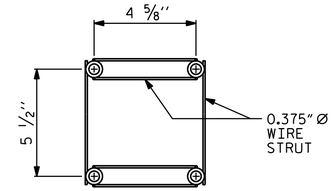

PLAN

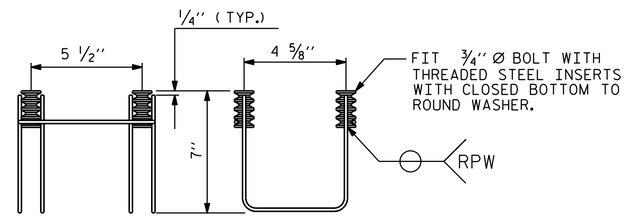

SIDE VIEW ELEVATION

4-BOLT METAL RAIL ANCHOR ASSEMBLY

(34 ASSEMBLIES REQUIRED)

NOTES

STRUCTURAL CONCRETE ANCHOR ASSEMBLY

THE STRUCTURAL CONCRETE ANCHOR ASSEMBLY SHALL CONSIST OF THE FOLLOWING COMPONENTS :

A. FERRULES SHALL BE MADE FROM STEEL MEETING THE REQUIREMENTS OF AASHTO M169, GRADE 12L14 AND SHALL HAVE A MINIMUM LENGTH OF THREADS OF 2'' FOR 3/4'' FERRULES.

B. 4 - 3/4'' Ø X 2 1/2'' BOLTS WITH WASHERS. BOLTS SHALL CONFORM TO THE REQUIREMENTS OF ASTM A307. BOLTS AND WASHERS SHALL BE GALVANIZED. AT THE CONTRACTOR'S OPTION, STAINLESS STEEL BOLTS AND WASHERS MAY BE USED AS AN ALTERNATE FOR THE 3/4'' Ø X 2 1/2'' GALVANIZED BOLTS AND WASHERS. THEY SHALL CONFORM TO OR EXCEED THE MECHANICAL REQUIREMENTS OF ASTM A307. THE USE OF THIS ALTERNATE SHALL BE APPROVED BY THE ENGINEER.

C. WIRE STRUT SHOWN IN THE CONCRETE ANCHOR ASSEMBLY DETAIL IS THE MINIMUM ALLOWABLE SIZE AND SHALL HAVE A MINIMUM TENSILE STRENGTH OF 100,000 PSI. AS AN OPTION, A 7/16'' Ø WIRE STRUT WITH A MINIMUM TENSILE STRENGTH OF 90,000 PSI IS ACCEPTABLE.

D. THE METAL RAIL ANCHOR ASSEMBLIES TO BE HOT DIPPED GALVANIZED TO CONFORM TO REQUIREMENTS OF AASHTO M111.

E. THE COST OF THE METAL RAIL ANCHOR ASSEMBLY WITH BOLTS AND WASHERS COMPLETE IN PLACE SHALL BE INCLUDED IN THE PRICE BID FOR LINEAR FEET OF METAL RAIL.

F. BOLTS TO BE TIGHTENED ONE-HALF TURN WITH A WRENCH FROM A FINGER-TIGHT POSITION.

THE CONTRACTOR MAY USE ADHESIVELY ANCHORED ANCHOR BOLTS IN PLACE OF THE METAL RAIL ANCHOR ASSEMBLY. LEVEL ONE FIELD TESTING IS REQUIRED, AND THE YIELD LOAD OF THE 3/4" Ø BOLT IS 10 KIPS. FOR ADHESIVELY ANCHORED ANCHOR BOLTS OR DOWELS, SEE THE STANDARD SPECIFICATIONS.

WHEN ADHESIVELY ANCHORED ANCHOR BOLTS ARE USED, BOLTS SHALL MEET THE REQUIREMENTS OF ASTM F593 ALLOY 304 STAINLESS STEEL WITH MINIMUM 75,000 PSI ULTIMATE STRENGTH. NUTS SHALL MEET THE REQUIREMENTS OF ASTM F594 ALLOY 304 STAINLESS STEEL AND WASHERS SHALL MEET THE REQUIREMENTS OF ASTM F844 EXCEPT THEY SHALL BE MADE FROM ALLOY 304 STAINLESS STEEL.

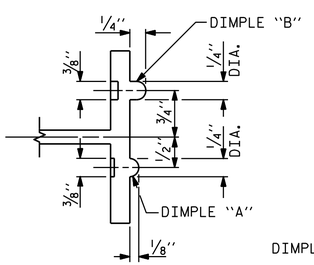

SECTION B - B

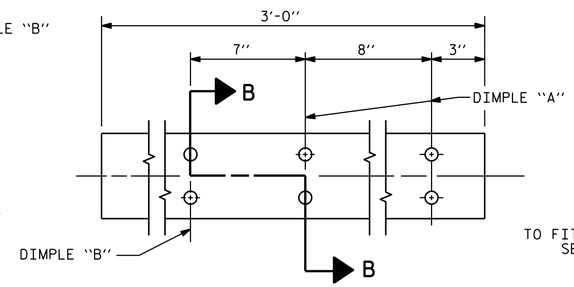

EXPANSION BAR DETAILS

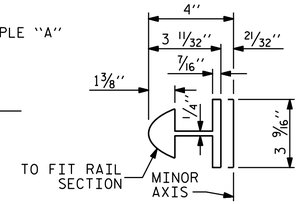

BAR SECTION

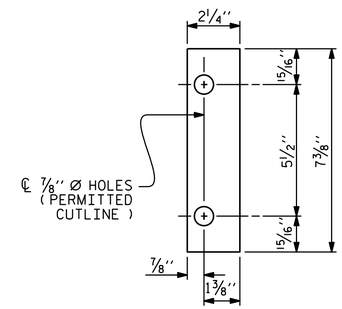

FRONT PLATE

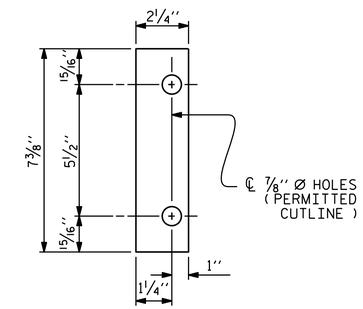

REAR PLATE

SHIM DETAILS

NOTE :
SHIMS MAY BE CUT ALONG PERMITTED CUTLINE OR SLOTTED TO EDGE OF PLATE TO FACILITATE PLACEMENT.

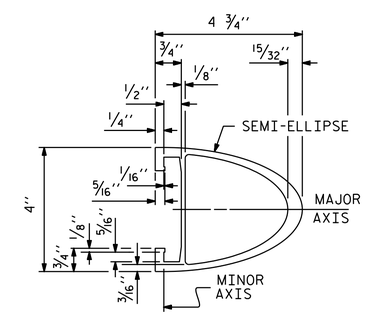

RAIL SECTION

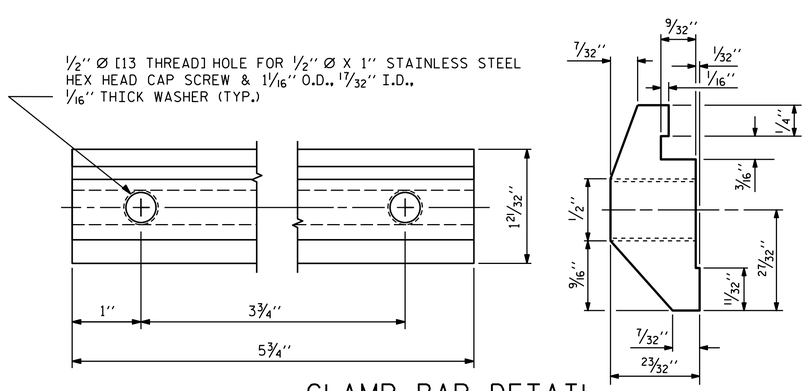

CLAMP BAR DETAIL

(4 REQUIRED PER POST)

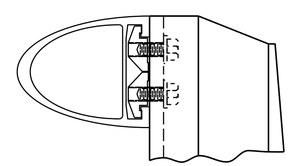

CLAMP ASSEMBLY

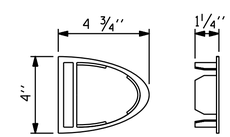

RAIL CAP

PROJECT NO. BP2.R001.1
CRAVEN COUNTY
STATION: 20+61.00 -L-

SHEET 2 OF 2

STATE OF NORTH CAROLINA
DEPARTMENT OF TRANSPORTATION
RALEIGH

STANDARD

2 BAR METAL RAIL

PLAN PREPARED BY:

Founded 1998

ALPHA & OMEGA GROUP
CIVIL | STRUCTURAL | WATER RESOURCES

ALPHA AND OMEGA GROUP, PC
4601 LAKE BOONE TRAIL, SUITE 3C, RALEIGH, NC 27607

Firm License No. C-1684 www.aogroup.com
A&O PROJECT NO. : 2021.058

NORTH CAROLINA PROFESSIONAL SEAL 022997 ENGINEER JAMES J. BARCONE
DocuSigned by: A8C764871F8048C...
10/13/2022

DOCUMENT NOT CONSIDERED FINAL UNLESS ALL SIGNATURES COMPLETED

ASSEMBLED BY : CT STONE	DATE : 5/4/22
CHECKED BY : TG ZEBLO	DATE : 5/5/22
DRAWN BY : EEM 6/94	REV. 5/1/06R KMM/GM
CHECKED BY : RGW 6/94	REV. 10/1/11 MAA/GM
	REV. 12/17 MAA/THC

REVISIONS								
NO.	BY:	DATE:	NO.	BY:	DATE:	SHEET NO.	TOTAL SHEETS
1			3			S-15	25
2			4				

STD. NO. BMR4

$$$$$$SYSTIME$$$$$
$$$$$$$$$$$$$$$$$$$$$$$$DGN$$$$$$$$$$$$$$$$$$$$$$$$
$$$$USERNAME$$$$

DocuSign Envelope ID: 23380BEE-B7F4-4BFC-85C3-A01932186A8F

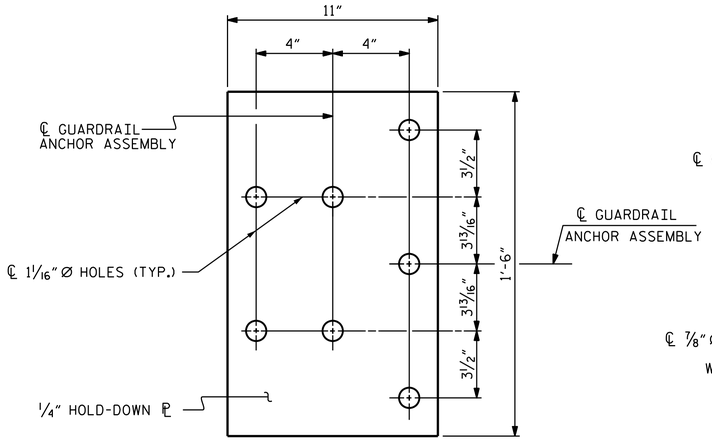

PLAN

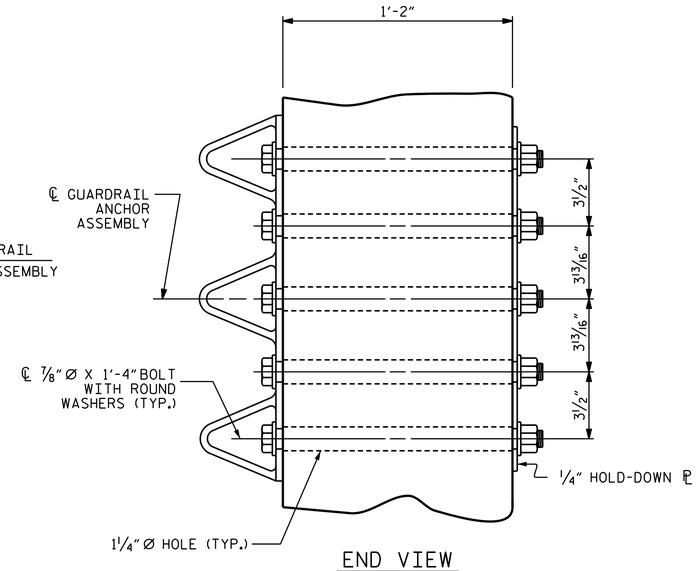

END VIEW

GUARDRAIL ANCHOR ASSEMBLY DETAILS

NOTES

THE GUARDRAIL ANCHOR ASSEMBLY SHALL CONSIST OF A 1/4" HOLD DOWN PLATE AND 7 - 7/8" Ø BOLTS WITH NUTS AND WASHERS.

THE HOLD-DOWN PLATE SHALL CONFORM TO AASHTO M270 GRADE 36. AFTER FABRICATION, THE HOLD-DOWN PLATE SHALL BE HOT-DIP GALVANIZED IN ACCORDANCE WITH AASHTO M111.

BOLTS SHALL CONFORM TO THE REQUIREMENTS OF ASTM A307 AND NUTS SHALL CONFORM TO THE REQUIREMENTS OF AASHTO M291. BOLTS, NUTS AND WASHERS SHALL BE GALVANIZED. AT THE CONTRACTOR'S OPTION, STAINLESS STEEL BOLTS, NUTS AND WASHERS MAY BE USED AS AN ALTERNATE FOR THE 7/8" Ø GALVANIZED BOLTS, NUTS AND WASHERS. THEY SHALL CONFORM TO OR EXCEED THE MECHANICAL REQUIREMENTS OF ASTM A307. THE USE OF THIS ALTERNATE SHALL BE APPROVED BY THE ENGINEER.

THE GUARDRAIL ANCHOR ASSEMBLY IS REQUIRED AT ALL POINTS WHERE APPROACH GUARDRAIL IS TO BE ATTACHED TO THE END OF THE PARAPET. FOR POINTS OF ATTACHMENT, SEE SKETCH.

AFTER INSTALLATION, THE EXPOSED THREAD OF THE BOLT SHALL BE BURRED WITH A SHARP POINTED TOOL.

THE COST OF THE GUARDRAIL ANCHOR ASSEMBLIES WITH BOLTS, NUTS AND WASHERS COMPLETE IN PLACE, SHALL BE INCLUDED IN THE VARIOUS PAY ITEMS.

THE VERTICAL REINFORCING BARS MAY BE SHIFTED SLIGHTLY IN THE END POST TO CLEAR ASSEMBLY BOLTS.

THE 1 1/4" Ø HOLES SHALL BE FORMED OR DRILLED WITH A CORE BIT. IMPACT TOOLS WILL NOT BE PERMITTED. ANY CONCRETE DAMAGED BY THIS WORK SHALL BE REPAIRED TO THE SATISFACTION OF THE ENGINEER.

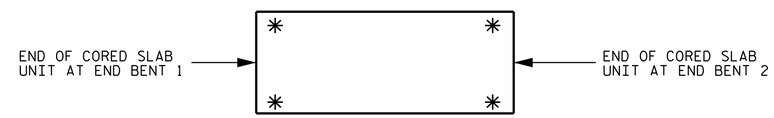

SKETCH SHOWING POINTS OF ATTACHMENT

✳ LOCATION OF GUARDRAIL ATTACHMENT

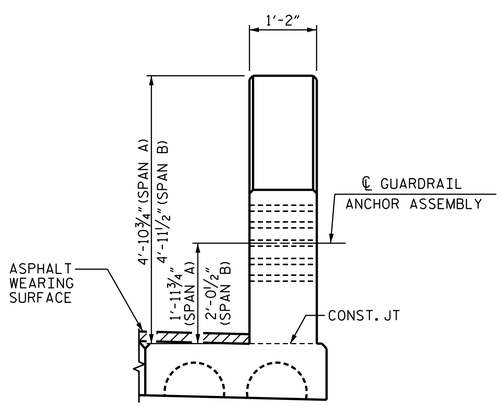

END VIEW
(TWO BAR METAL RAIL)

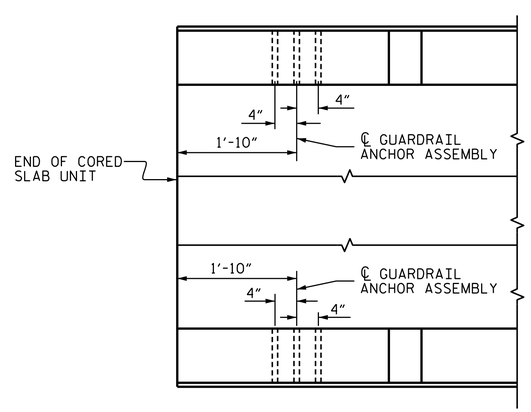

PLAN

LOCATION OF GUARDRAIL ANCHOR AT END POST

PROJECT NO. BP2.R001.1
CRAVEN COUNTY
STATION: 20+61.00 -L-

STATE OF NORTH CAROLINA
DEPARTMENT OF TRANSPORTATION
RALEIGH

STANDARD
GUARDRAIL ANCHORAGE DETAILS FOR METAL RAILS

PLAN PREPARED BY:
Founded 1998
ALPHA & OMEGA GROUP
CIVIL | STRUCTURAL | WATER RESOURCES
ALPHA AND OMEGA GROUP, PC
4601 LAKE BOONE TRAIL, SUITE 3C, RALEIGH, NC 27607
Firm License No. C-1684 www.aogroup.com
A&O PROJECT NO. : 2021.058

NORTH CAROLINA PROFESSIONAL SEAL 027997 ENGINEER JAMES J. BARCO
DocuSigned by: A8C764871F8049C...
10/13/2022

DOCUMENT NOT CONSIDERED FINAL UNLESS ALL SIGNATURES COMPLETED

REVISIONS						
NO.	BY:	DATE:	NO.	BY:	DATE:	
1			3			
2			4			

SHEET NO. S-16
TOTAL SHEETS 25

ASSEMBLED BY : CT STONE		DATE : 5/9/22	
CHECKED BY : TG ZEBLO		DATE : 5/9/22	
DRAWN BY : MAA 5/10	REV. 1/15	MAA/TMG	
CHECKED BY : GM 5/10	REV. 12/17	MAA/THC	
	REV. 5/18	MAA/THC	

(SHT 2) STD. NO. GRA3

$$$$$$SYSTIME$$$$$
$$$$$$$$$$$$$$$$$$$$$$DGN$$$$$$$$$$$$$$$$$$$$$$$$
$$$$USERNAME$$$$

DocuSign Envelope ID: 6E212C7F-9A91-401A-A513-F90A089FBCAF

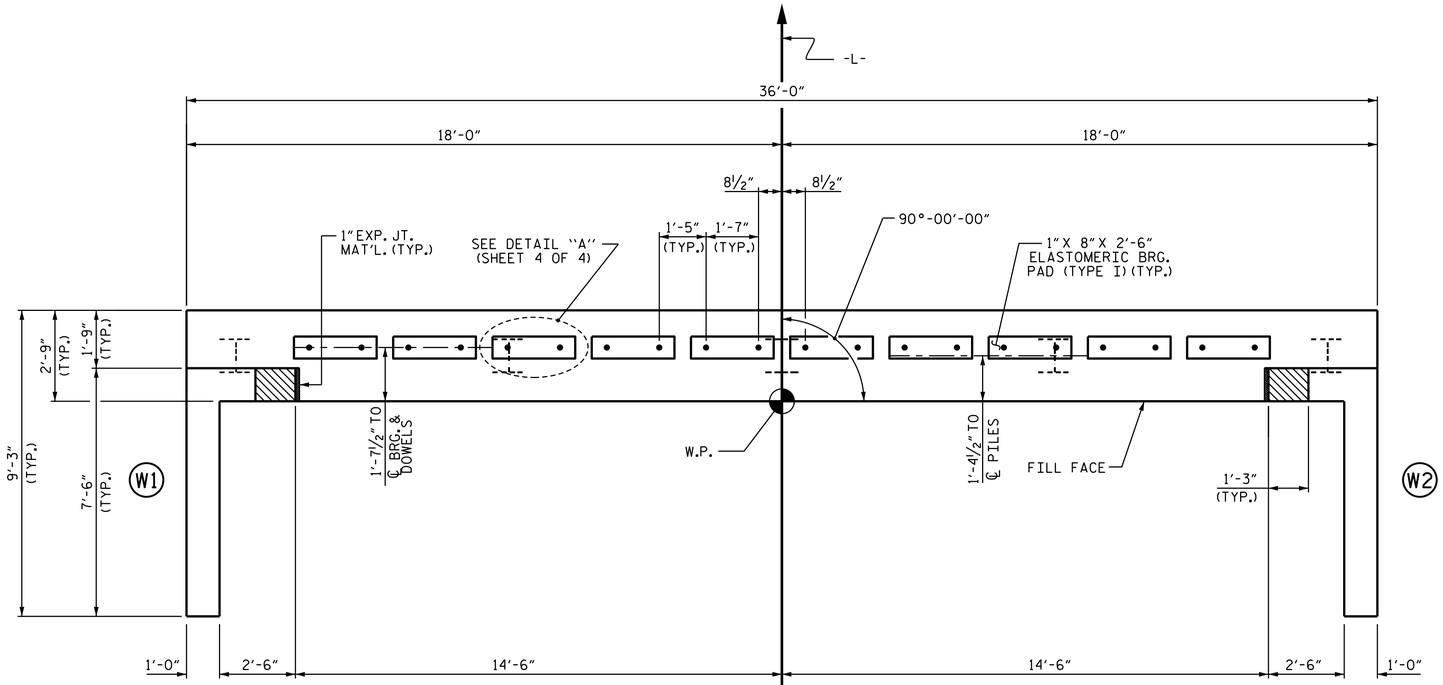

PLAN

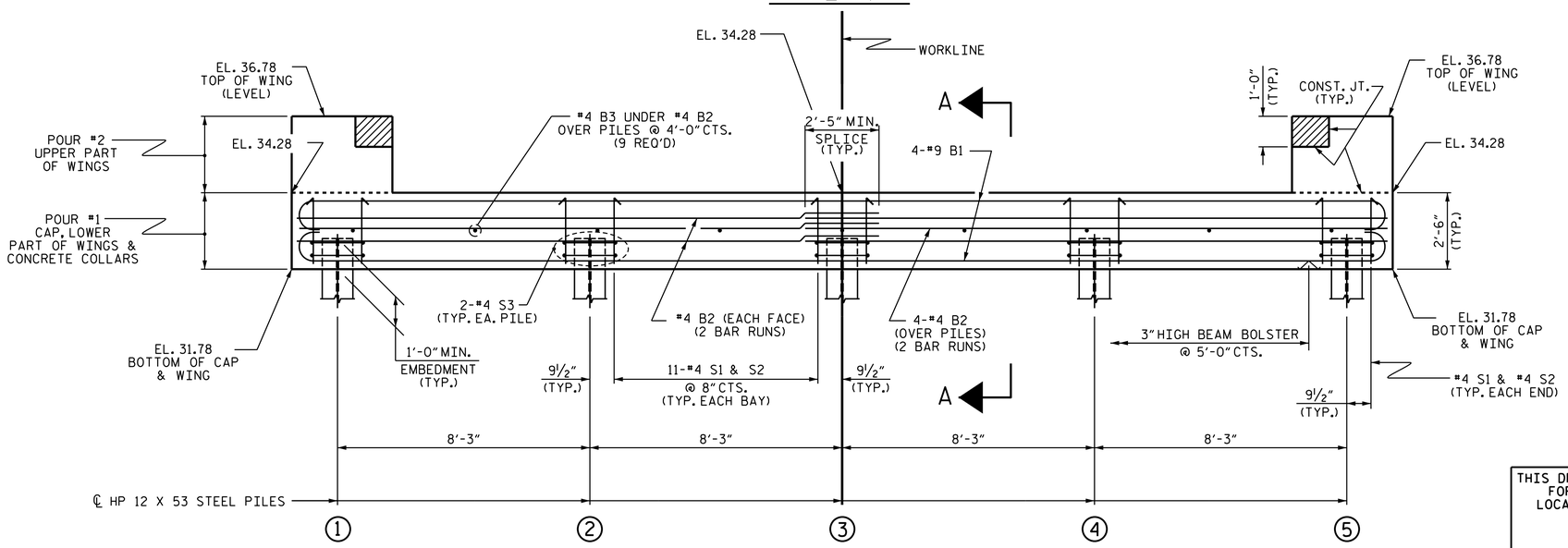

ELEVATION

WINGS NOT SHOWN FOR CLARITY.
FOR SECTION A-A, SEE SHEET 4 OF 4.
CONCRETE COLLARS FOR STEEL PILES NOT SHOWN IN PLAN AND ELEVATION VIEWS FOR CLARITY.
SEE "CORROSION PROTECTION FOR STEEL PILES DETAIL", SHEET 4 OF 4.

NOTES

STIRRUPS IN CAP MAY BE SHIFTED AS NECESSARY TO CLEAR DOWELS.

THE CONCRETE IN THE SHADED AREA OF THE WING SHALL BE POURED AFTER THE VERTICAL CONCRETE BARRIER RAIL IS CAST IF SLIP FORMING IS USED.

FOR PILE SPLICE DETAILS, SEE SHEET 4 OF 4.

FOR WING DETAILS, SEE SHEET 3 OF 4.

PROJECT NO. BP2.R001.1
CRAVEN COUNTY
STATION: 20+61.00 -L-

SHEET 1 OF 4

ASSEMBLED BY : CT STONE	DATE : 5/9/22
CHECKED BY : TG ZEBLO	DATE : 5/9/22
DRAWN BY : DGE 01/10	REV. 4/15 MAA/TMG
CHECKED BY : MKT 01/10	

PLAN PREPARED BY:
ALPHA & OMEGA GROUP
CIVIL | STRUCTURAL | WATER RESOURCES
ALPHA AND OMEGA GROUP, PC
4601 LAKE BOONE TRAIL, SUITE 3C, RALEIGH, NC 27607
Firm License No. C-1684 www.aogroup.com
A&O PROJECT NO. : 2021.058

THIS DRAWING REVIWED AND ADOPTED FOR USE AT THE REFERENCED LOCATION BY THE UNDERSIGNED:

NORTH CAROLINA PROFESSIONAL SEAL 022997 ENGINEER JAMES J. BARCONE
DocuSigned by: A8C754B71E804BC...
10/13/2022

DOCUMENT NOT CONSIDERED FINAL UNLESS ALL SIGNATURES COMPLETED

STATE OF NORTH CAROLINA
DEPARTMENT OF TRANSPORTATION
RALEIGH

SUBSTRUCTURE
END BENT No. 1

REVISIONS						SHEET NO.
NO.	BY:	DATE:	NO.	BY:	DATE:	S-17
1			3			TOTAL SHEETS
2			4			25

STD. NO. EB_30_90S

$$$$$$SYSTIME$$$$$
$$$$$$$$$$$$$$$$$$$$$$DGN$$$$$$$$$$$$$$$$$$$$$$$$
$$$$USERNAME$$$$

DocuSign Envelope ID: 00B32105-A8C6-42CA-84DF-88057E2B2BBD

NOTES

STIRRUPS IN CAP MAY BE SHIFTED AS NECESSARY TO CLEAR DOWELS.

THE CONCRETE IN THE SHADED AREA OF THE WING SHALL BE POURED AFTER THE VERTICAL CONCRETE BARRIER RAIL IS CAST IF SLIP FORMING IS USED.

FOR PILE SPLICE DETAILS, SEE SHEET 4 OF 4.

FOR WING DETAILS, SEE SHEET 3 OF 4.

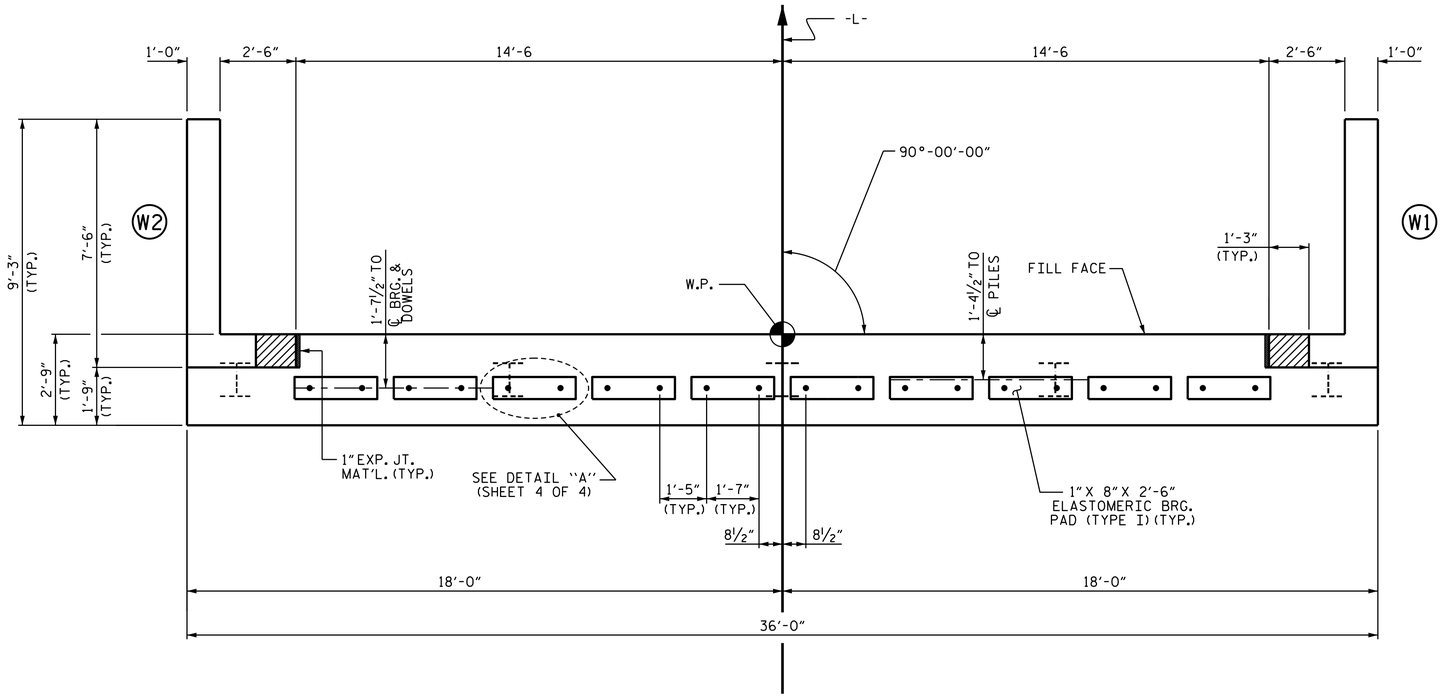

PLAN

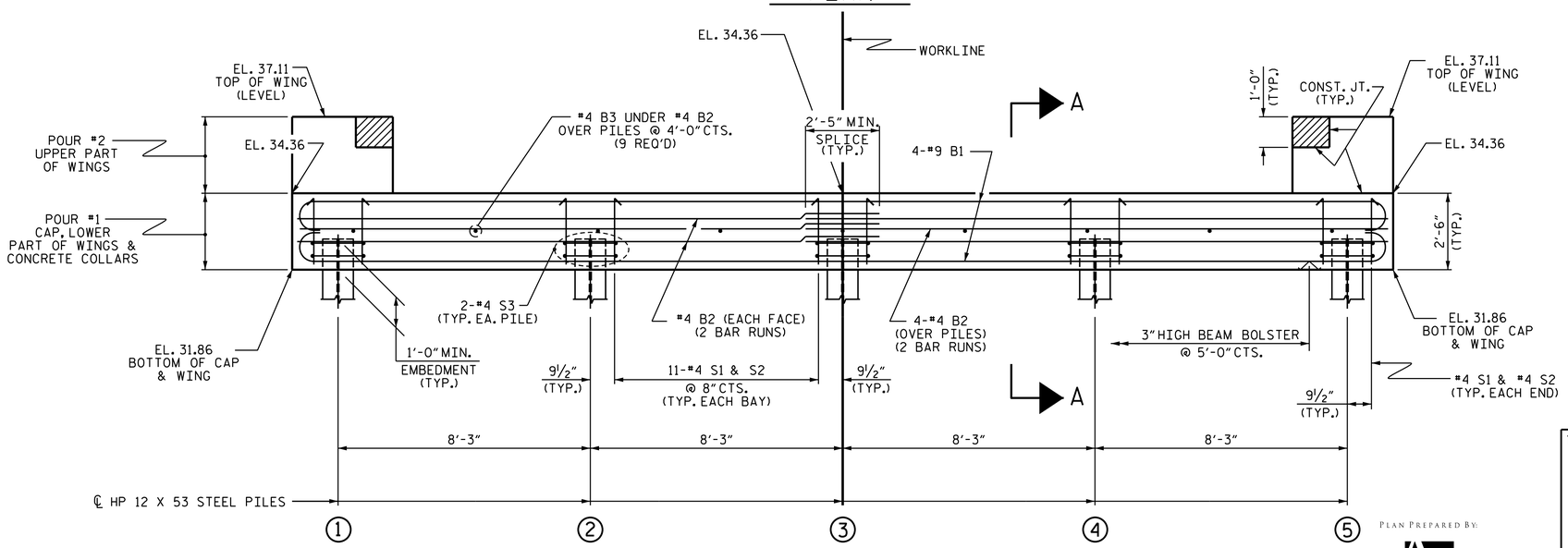

ELEVATION

WINGS NOT SHOWN FOR CLARITY.
FOR SECTION A-A, SEE SHEET 4 OF 4.
CONCRETE COLLARS FOR STEEL PILES NOT SHOWN IN PLAN AND ELEVATION VIEWS FOR CLARITY.
SEE "CORROSION PROTECTION FOR STEEL PILES DETAIL", SHEET 4 OF 4.

PROJECT NO. BP2.R001.1
CRAVEN COUNTY
STATION: 20+61.00 -L-

SHEET 2 OF 4

THIS DRAWING REVIWED AND ADOPTED FOR USE AT THE REFERENCED LOCATION BY THE UNDERSIGNED:

NORTH CAROLINA PROFESSIONAL SEAL 022997 ENGINEER JAMES J. BARCOTT
A8C764871F80...
10/13/2022

DOCUMENT NOT CONSIDERED FINAL UNLESS ALL SIGNATURES COMPLETED

STATE OF NORTH CAROLINA
DEPARTMENT OF TRANSPORTATION
RALEIGH

SUBSTRUCTURE

END BENT No. 2

REVISIONS							SHEET NO.
NO.	BY:	DATE:	NO.	BY:	DATE:		S-18
1			3				TOTAL SHEETS
2			4				25

ASSEMBLED BY : CT STONE		DATE : 5/9/22	
CHECKED BY : TG ZEBLO		DATE : 5/9/22	
DRAWN BY : DGE	01/10	REV. 4/15	MAA/TMG
CHECKED BY : MKT	01/10		

PLAN PREPARED BY:
Founded 1998
ALPHA & OMEGA GROUP
CIVIL | STRUCTURAL | WATER RESOURCES
ALPHA AND OMEGA GROUP, PC
4601 LAKE BOONE TRAIL, SUITE 3C, RALEIGH, NC 27607
Firm License No. C-1684 www.aogroup.com
A&O PROJECT NO. : 2021.058

STD. NO. EB_30_90S

$$$$$$SYSTIME$$$$$
$$$$$$$$$$$$$$$$$$$$DGN$$$$$$$$$$$$$$$$$$$$$$$$$
$$$$USERNAME$$$$

DocuSign Envelope ID: 5EE76A7B-A986-449D-804D-8FA6D70079C7

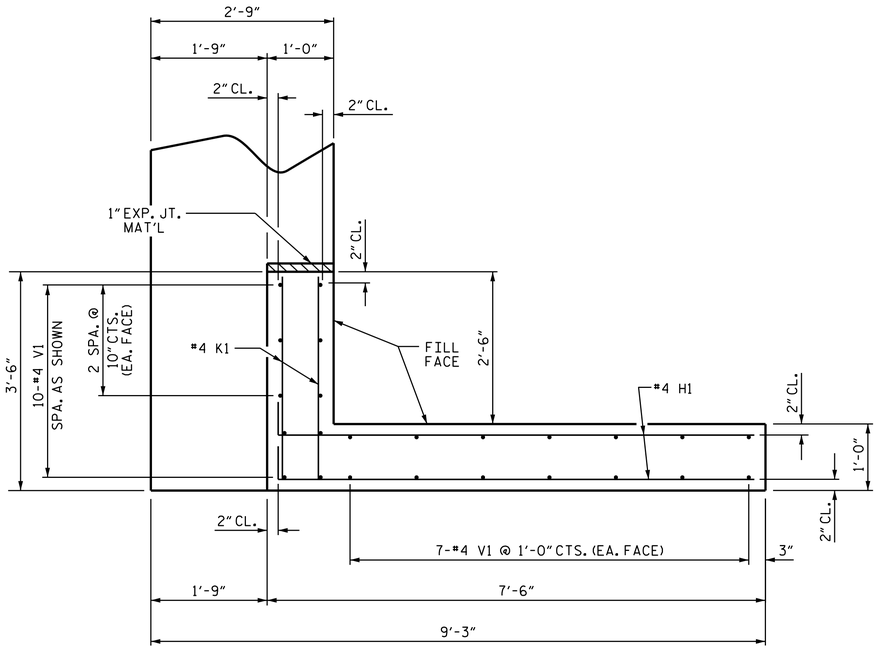

PLAN OF WING (W1)

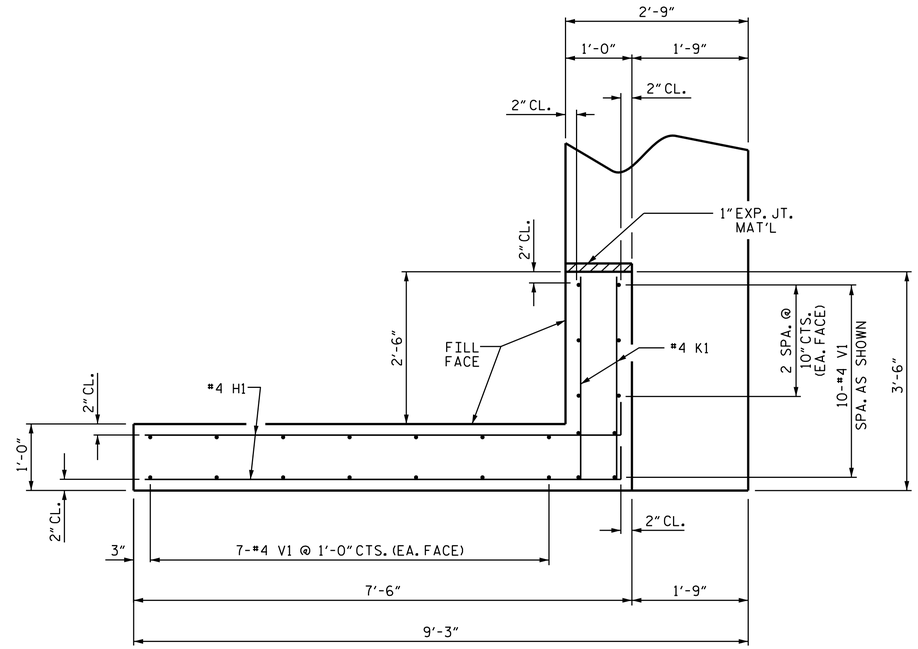

PLAN OF WING (W2)

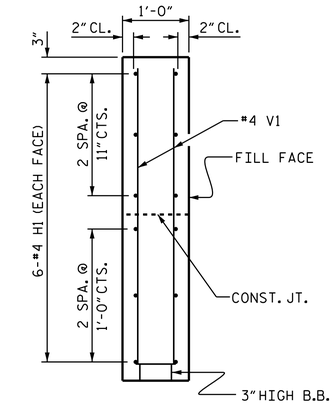

SECTION X-X

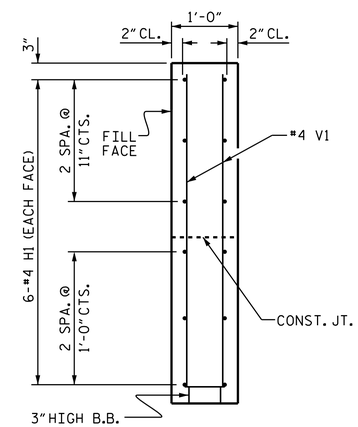

SECTION Y-Y

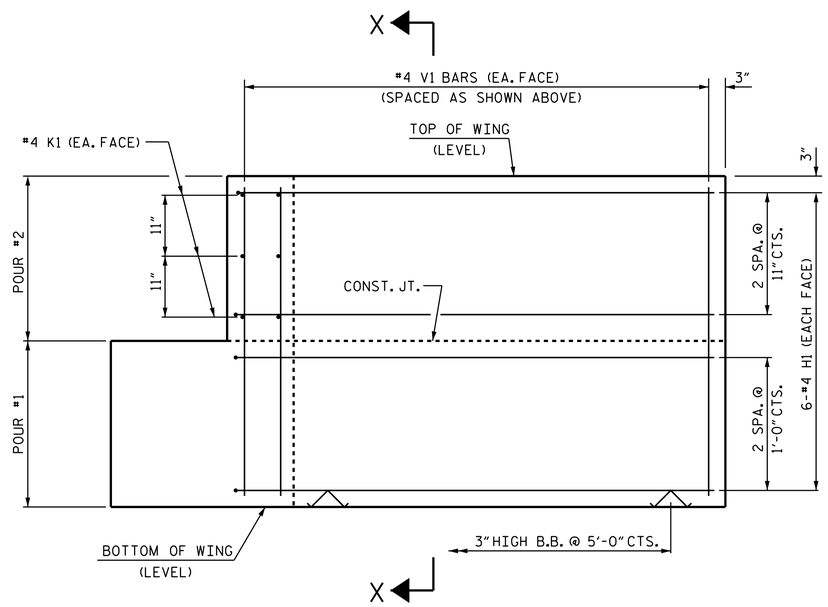

ELEVATION OF WING (W1)

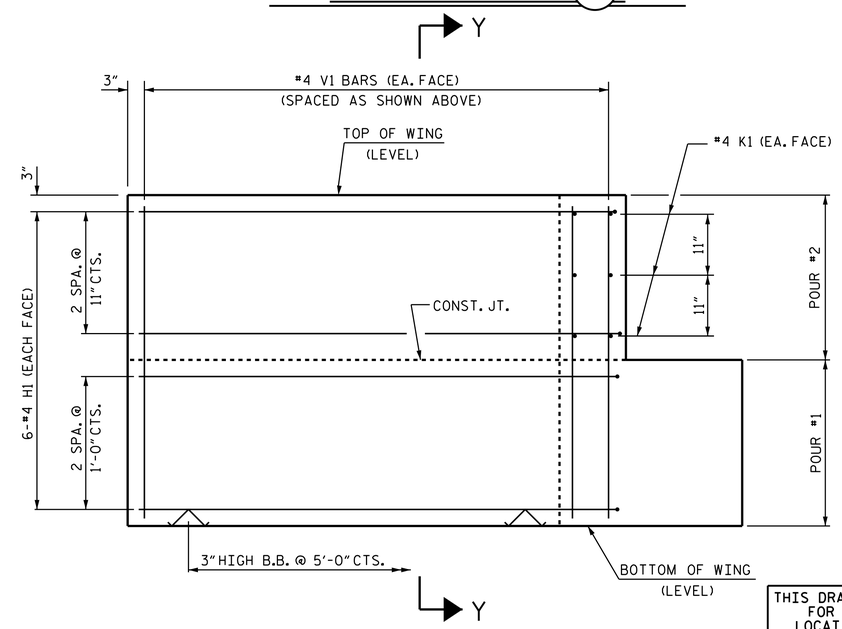

ELEVATION OF WING (W2)

PROJECT NO. BP2.R001.1

CRAVEN COUNTY

STATION: 20+61.00 -L-

SHEET 3 OF 4

THIS DRAWING REVIWED AND ADOPTED FOR USE AT THE REFERENCED LOCATION BY THE UNDERSIGNED:

NORTH CAROLINA PROFESSIONAL SEAL 022997 ENGINEER JAMES J. BARCUS

A8C7B4871F804...

10/13/2022

DOCUMENT NOT CONSIDERED FINAL UNLESS ALL SIGNATURES COMPLETED

STATE OF NORTH CAROLINA
DEPARTMENT OF TRANSPORTATION
RALEIGH

SUBSTRUCTURE

END BENT
WING DETAILS

REVISIONS						SHEET NO.
NO.	BY:	DATE:	NO.	BY:	DATE:	S-19
1			3			TOTAL SHEETS
2			4			25

WING DETAILS

PLAN PREPARED BY:

Founded 1998

ALPHA & OMEGA GROUP
CIVIL | STRUCTURAL | WATER RESOURCES

ALPHA AND OMEGA GROUP, PC
4601 LAKE BOONE TRAIL, SUITE 3C, RALEIGH, NC 27607

Firm License No. C-1684 www.aogroup.com
A&O PROJECT NO. : 2021.058

ASSEMBLED BY : CT STONE	DATE : 5/9/22
CHECKED BY : TG ZEBLO	DATE : 5/9/22
DRAWN BY : DGE 02/10	REV. 4/15 MAA/TMG
CHECKED BY : MKT 02/10	

$$$$$$SYSTIME$$$$$
$$$$$$$$$$$$$$$$$$$$$$$$DGN$$$$$$$$$$$$$$$$$$$$$$$$
$$$$USERNAME$$$$

STD. NO. EB_30_90S

DocuSign Envelope ID: 8257A545-F10E-46FF-B692-48F0EE425BB7

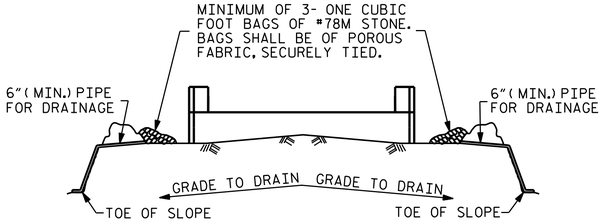

BAGGED STONE AND PIPE SHALL BE PLACED IMMEDIATELY AFTER COMPLETION OF END BENT EXCAVATION. PIPE MAY BE EITHER CONCRETE, CORRUGATED STEEL, CORRUGATED ALUMINUM ALLOY, OR CORRUGATED PLASTIC. PERFORATED PIPE WILL NOT BE ALLOWED.

BAGGED STONE SHALL REMAIN IN PLACE UNTIL THE ENGINEER DIRECTS THAT IT BE REMOVED. THE CONTRACTOR SHALL REMOVE AND DISPOSE OF SILT ACCUMULATIONS AT BAGGED STONE WHEN SO DIRECTED BY THE ENGINEER. BAGS SHALL BE REMOVED AND REPLACED WHENEVER THE ENGINEER DETERMINES THAT THEY HAVE DETERIORATED AND LOST THEIR EFFECTIVENESS.

NO SEPARATE PAYMENT WILL BE MADE FOR THIS WORK AND THE ENTIRE COST OF THIS WORK SHALL BE INCLUDED IN THE UNIT CONTRACT PRICE BID FOR THE SEVERAL PAY ITEMS.

TEMPORARY DRAINAGE AT END BENT

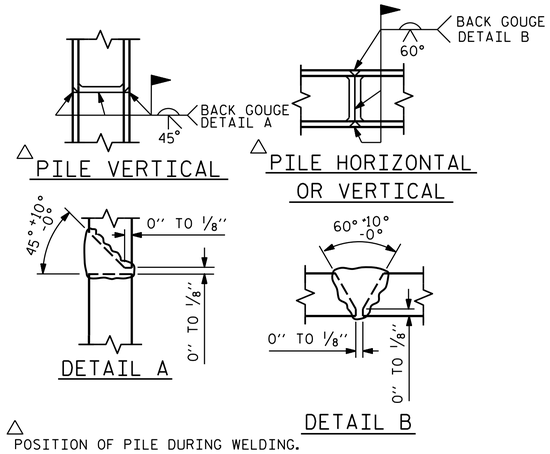

△ POSITION OF PILE DURING WELDING.

PILE SPLICE DETAILS

BAR TYPES

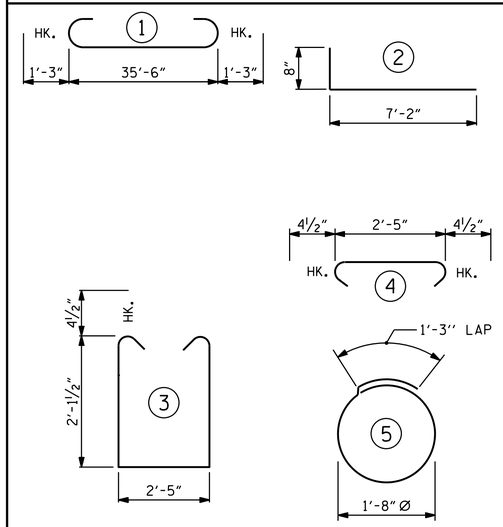

ALL BAR DIMENSIONS ARE OUT TO OUT.

BILL OF MATERIAL
FOR ONE END BENT

BAR	NO.	SIZE	TYPE	LENGTH	WEIGHT
B1	8	#9	1	38'-0"	1034
B2	16	#4	STR	19'-1"	204
B3	9	#4	STR	2'-5"	15
D1	20	#6	STR	1'-6"	45
H1	24	#4	2	7'-10"	126
K1	12	#4	STR	2'-11"	23
S1	46	#4	3	7'-5"	228
S2	46	#4	4	3'-2"	97
S3	10	#4	5	6'-6"	43
V1	48	#4	STR	4'-8"	150

REINFORCING STEEL (FOR ONE END BENT) 1965 LBS.

CLASS A CONCRETE BREAKDOWN (FOR END BENT 1)

POUR #1 CAP, LOWER PART OF WINGS & COLLARS 10.4 C.Y.

POUR #2 UPPER PART OF WINGS 1.9 C.Y.

TOTAL CLASS A CONCRETE 12.2 C.Y.

CLASS A CONCRETE BREAKDOWN (FOR END BENT 2)

POUR #1 CAP, LOWER PART OF WINGS & COLLARS 10.4 C.Y.

POUR #2 UPPER PART OF WINGS 2.1 C.Y.

TOTAL CLASS A CONCRETE 12.4 C.Y.

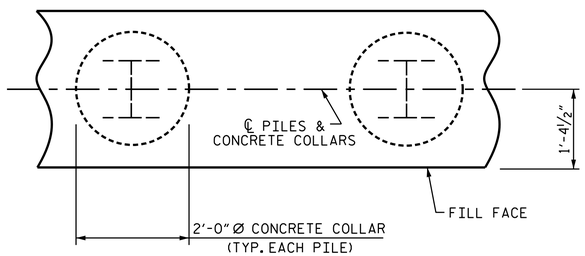

PLAN

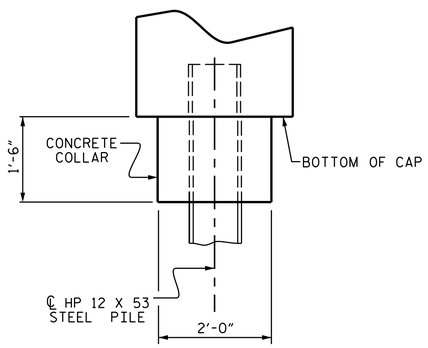

ELEVATION

CORROSION PROTECTION FOR STEEL PILES DETAIL

(END BENT No. 1 SHOWN, END BENT No. 2 SIMILAR BY ROTATION)

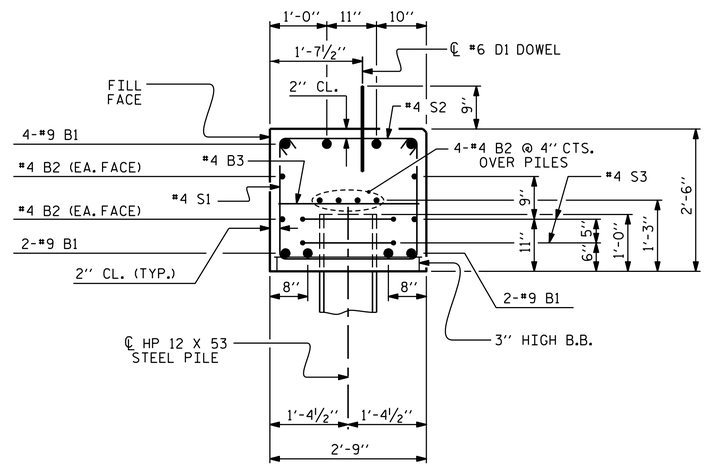

SECTION A-A

(CONCRETE COLLAR NOT SHOWN FOR CLARITY. SEE "CORROSION PROTECTION FOR STEEL PILES DETAIL.")

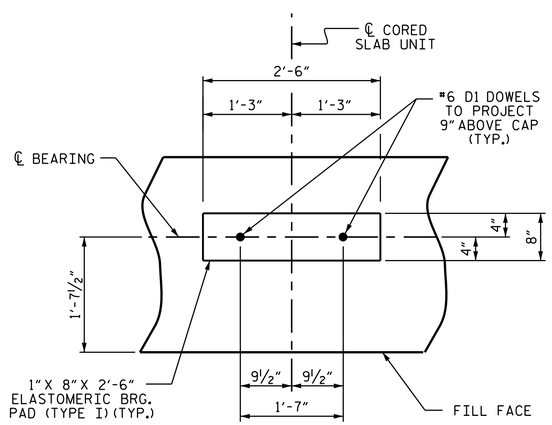

DETAIL "A"

(END BENT No. 1 SHOWN, END BENT No. 2 SIMILAR BY ROTATION)

PROJECT NO. BP2.R001.1

CRAVEN COUNTY

STATION: 20+61.00 -L-

SHEET 4 OF 4

THIS DRAWING REVIWED AND ADOPTED FOR USE AT THE REFERENCED LOCATION BY THE UNDERSIGNED:

NORTH CAROLINA PROFESSIONAL SEAL 022997 ENGINEER JAMES J. BARCONE

10/13/2022

DOCUMENT NOT CONSIDERED FINAL UNLESS ALL SIGNATURES COMPLETED

PLAN PREPARED BY:

Founded 1998

ALPHA & OMEGA GROUP
CIVIL | STRUCTURAL | WATER RESOURCES

ALPHA AND OMEGA GROUP, PC
4601 LAKE BOONE TRAIL, SUITE 3C, RALEIGH, NC 27607

Firm License No. C-1684 www.aogroup.com
A&O PROJECT NO. : 2021.058

STATE OF NORTH CAROLINA
DEPARTMENT OF TRANSPORTATION
RALEIGH

SUBSTRUCTURE

END BENT No. 1 & 2 DETAILS

ASSEMBLED BY : CT STONE	DATE : 5/9/22
CHECKED BY : TG ZEBLO	DATE : 5/9/22
DRAWN BY : DGE 12/09	REV. 4/17 MAA/THC
CHECKED BY : MKT 01/10	

REVISIONS						SHEET NO.
NO.	BY:	DATE:	NO.	BY:	DATE:	S-20
1			3			TOTAL SHEETS
2			4			25

$$$$$$SYSTIME$$$$$
$$$$$$$$$$$$$$$$$$$$DGN$$$$$$$$$$$$$$$$$$$$$$$$$
$$$$USERNAME$$$$

STD. NO. EB_30_90S

DocuSign Envelope ID: CE3B6438-197E-434B-9EC8-EC5DF52962E0

NOTES

STIRRUPS IN CAP MAY BE SHIFTED AS NECESSARY TO CLEAR DOWELS.

✱ INVERT ALTERNATE STIRRUPS.

GALVANIZE THE TOP OF EACH INTERIOR BENT PILE A MINIMUM OF 22.0 FEET. GALVANIZE IN ACCORDANCE WITH SECTION 1076 OF THE STANDARD SPECIFICATIONS.

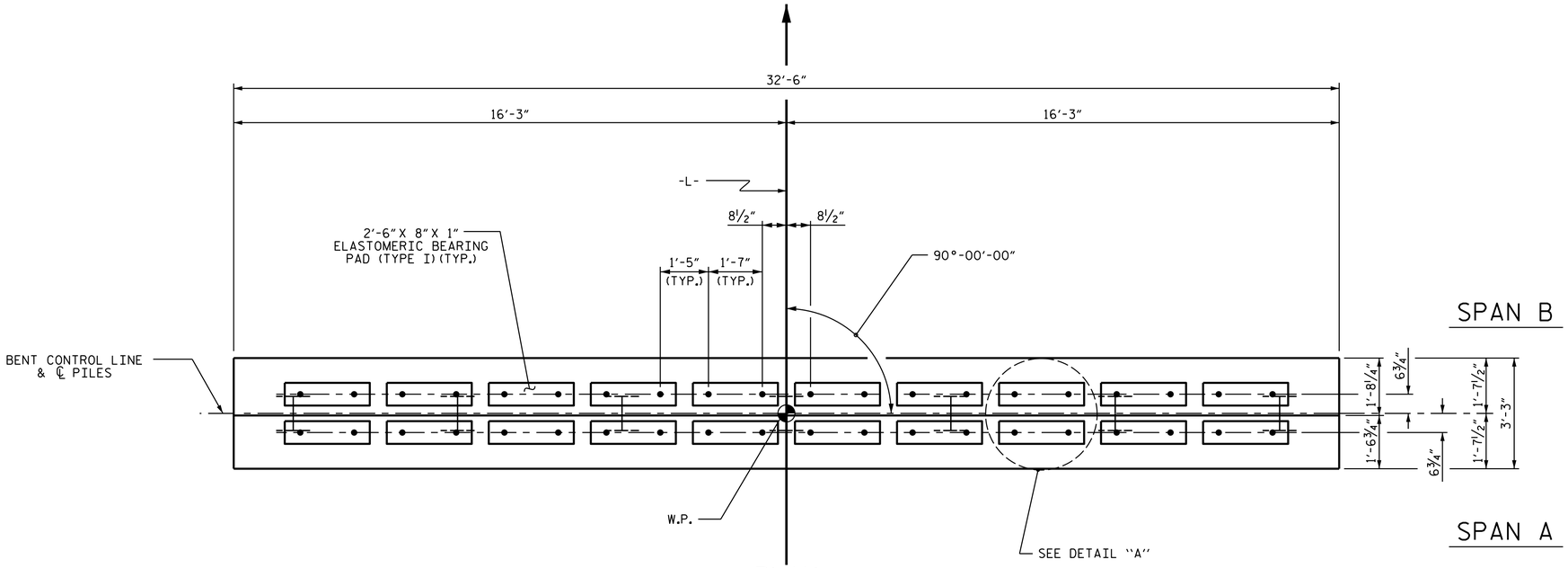

PLAN

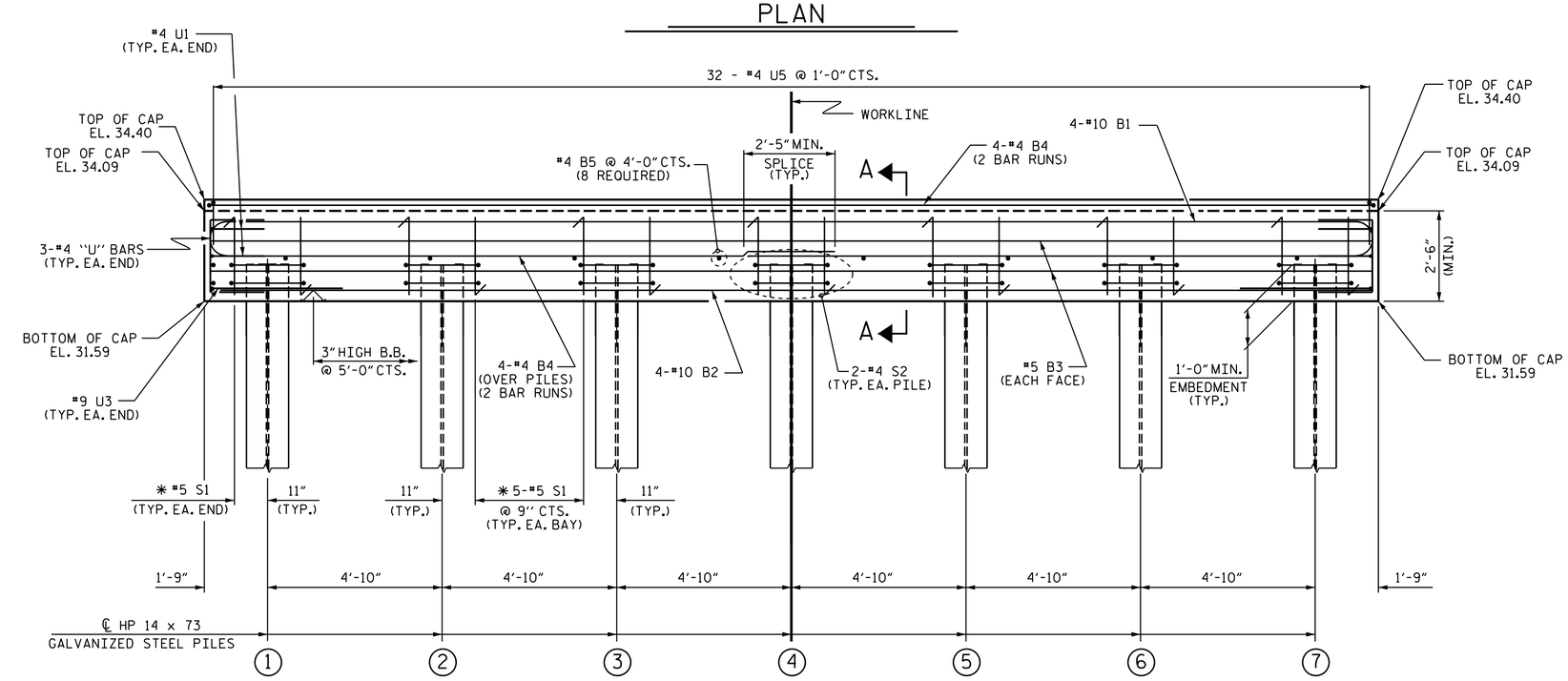

ELEVATION

FOR SECTION A-A, SEE SHEET 2 OF 2

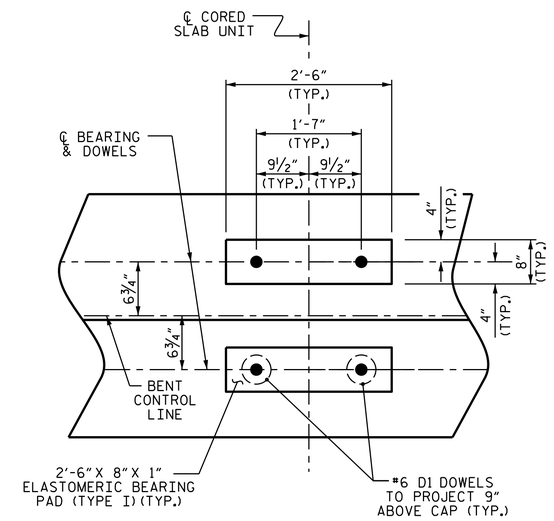

DETAIL "A"

(DIMENSIONS ARE TYPICAL EACH BEARING)

PROJECT NO. BP2.R001.1

CRAVEN COUNTY

STATION: 20+61.00 -L-

SHEET 1 OF 2

THIS DRAWING REVIWED AND ADOPTED FOR USE AT THE REFERENCED LOCATION BY THE UNDERSIGNED:

NORTH CAROLINA PROFESSIONAL SEAL 022997 ENGINEER JAMES J. BARCONE

DocuSigned by: 10/13/2022

DOCUMENT NOT CONSIDERED FINAL UNLESS ALL SIGNATURES COMPLETED

STATE OF NORTH CAROLINA
DEPARTMENT OF TRANSPORTATION
RALEIGH

SUBSTRUCTURE

BENT No. 1

REVISIONS						SHEET NO.
NO.	BY:	DATE:	NO.	BY:	DATE:	S-21
1			3			TOTAL SHEETS
2			4			25

PLAN PREPARED BY:

Founded 1998

ALPHA & OMEGA GROUP
CIVIL | STRUCTURAL | WATER RESOURCES

ALPHA AND OMEGA GROUP, PC
4601 LAKE BOONE TRAIL, SUITE 3C, RALEIGH, NC 27607

Firm License No. C-1684 www.aogroup.com
A&O PROJECT NO. : 2021.058

ASSEMBLED BY : CT STONE		DATE : 5/10/22	
CHECKED BY : TG ZEBLO		DATE : 5/10/22	
DRAWN BY : DGE	05/10	REV. 6/17	MAA/THC
CHECKED BY : MKT	05/10		

$$$$$$SYSTIME$$$$$
$$$$$$$$$$$$$$$$$$$$$$$$DGN$$$$$$$$$$$$$$$$$$$$$$$$
$$$$USERNAME$$$$

STD. NO. 14" HP_BT_30_90S_<60'

DocuSign Envelope ID: 0D203757-77FA-4CCB-8387-D2CF56F18B92

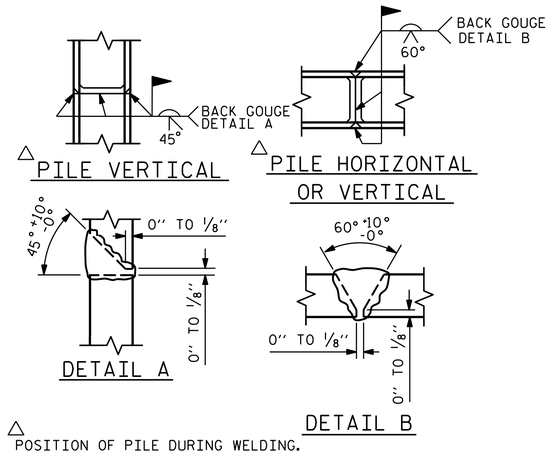

PILE SPLICE DETAILS

BAR TYPES

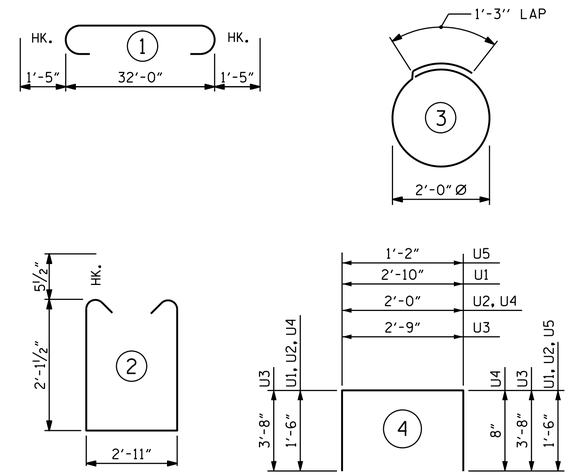

ALL BAR DIMENSIONS ARE OUT TO OUT.

BILL OF MATERIAL
FOR ONE BENT

BAR	NO.	SIZE	TYPE	LENGTH	WEIGHT
B1	4	#10	1	34'-10"	600
B2	4	#10	STR	32'-2"	554
B3	4	#5	STR	32'-2"	134
B4	16	#4	STR	17'-4"	185
B5	8	#4	STR	2'-11"	16
D1	40	#6	STR	1'-6"	90
S1	32	#5	2	8'-1"	270
S2	14	#4	3	7'-7"	71
U1	4	#4	4	5'-10"	16
U2	4	#4	4	5'-0"	13
U3	2	#9	4	10'-1"	69
U4	2	#4	4	4'-2"	6
U5	32	#4	4	4'-2"	89

REINFORCING STEEL (FOR ONE BENT) 2113 LBS

CLASS A CONCRETE BREAKDOWN (FOR ONE BENT)

TOTAL CLASS A CONCRETE 10.4 C.Y.

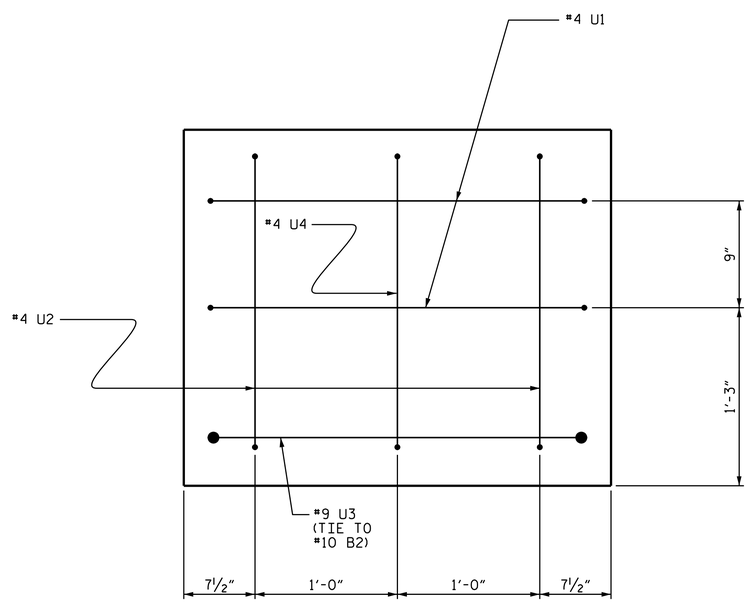

END OF CAP VIEW
(TYPICAL BOTH ENDS)

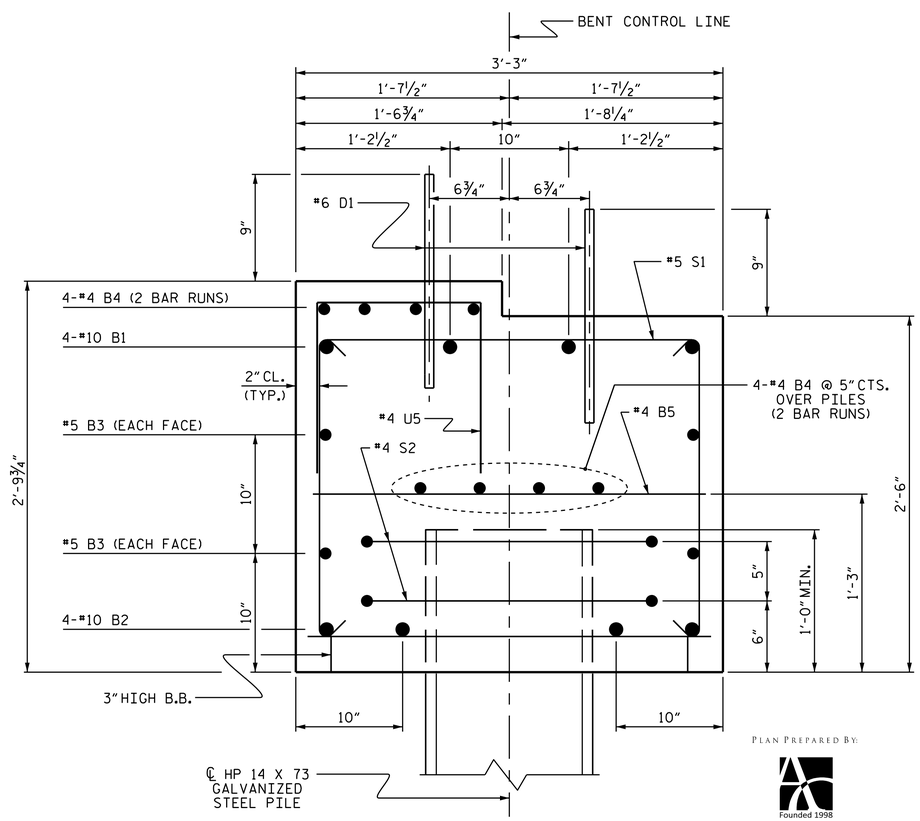

SECTION A-A

PROJECT NO. BP2.R001.1

CRAVEN COUNTY

STATION: 20+61.00 -L-

SHEET 2 OF 2

THIS DRAWING REVIWED AND ADOPTED FOR USE AT THE REFERENCED LOCATION BY THE UNDERSIGNED:

NORTH CAROLINA PROFESSIONAL SEAL 022997 ENGINEER JAMES J. BARCONIC

10/13/2022

DOCUMENT NOT CONSIDERED FINAL UNLESS ALL SIGNATURES COMPLETED

STATE OF NORTH CAROLINA
DEPARTMENT OF TRANSPORTATION
RALEIGH

SUBSTRUCTURE

BENT No. 1

REVISIONS						SHEET NO.
NO.	BY:	DATE:	NO.	BY:	DATE:	S-22
1			3			TOTAL SHEETS
2			4			25

PLAN PREPARED BY:

Founded 1998

ALPHA & OMEGA GROUP
CIVIL | STRUCTURAL | WATER RESOURCES

ALPHA AND OMEGA GROUP, PC
4601 LAKE BOONE TRAIL, SUITE 3C, RALEIGH, NC 27607

Firm License No. C-1684 www.aogroup.com
A&O PROJECCT NO. : 2021.058

ASSEMBLED BY :	CT STONE	DATE :	5/10/22
CHECKED BY :	TG ZEBLO	DATE :	5/10/22
DRAWN BY :	DGE 05/10	REV. 6/17	MAA/THC
CHECKED BY :	MKT 05/10		

$$$$$$SYSTIME$$$$$
$$$$$$$$$$$$$$$$$$$$$$$$DGN$$$$$$$$$$$$$$$$$$$$$$$$
$$$$USERNAME$$$$

STD. NO. 14" HP_BT_30_90S_<60'

DocuSign Envelope ID: E3F08CB1-15EC-4BC3-885A-8753C07FB3D5

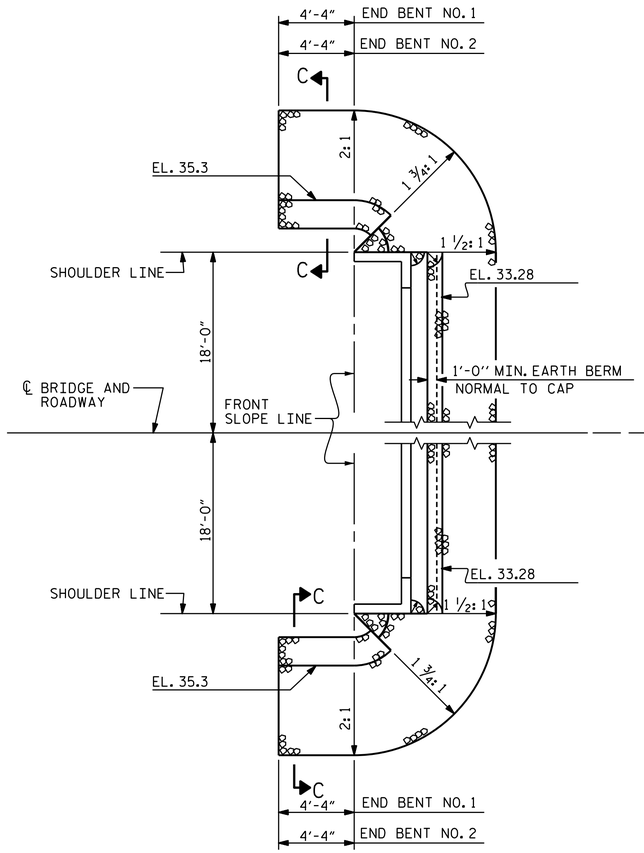

SHOULDER RIP RAP IS HIGHER THAN BERM RIP RAP

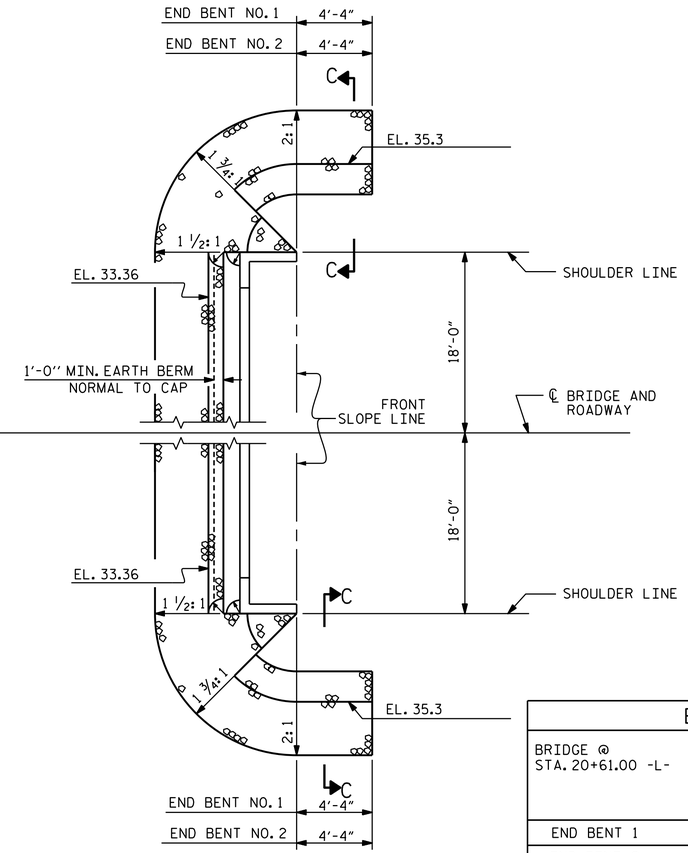

BERM RIP RAPPED

NOTES :

FOR BERM WIDTH DIMENSIONS, SEE GENERAL DRAWING.

ESTIMATED QUANTITIES		
BRIDGE @ STA. 20+61.00 -L-	RIP RAP CLASS II (2'-0" THICK)	GEOTEXTILE FOR DRAINAGE
	TONS	SQUARE YARDS
END BENT 1	45	50
END BENT 2	45	50

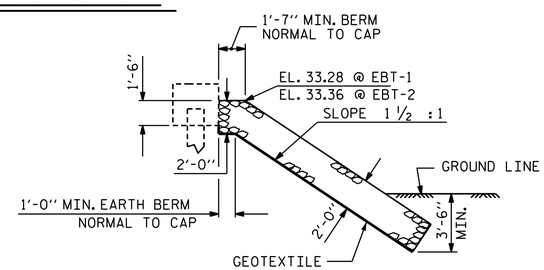

℄ SECTION

BERM RIP RAPPED

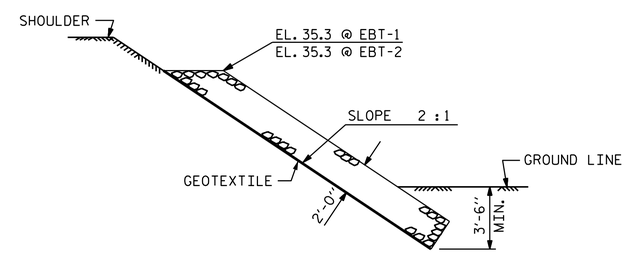

SECTION C-C

PROJECT NO. BP2.R001.1

CRAVEN COUNTY

STATION: 20+61.00 -L-

STATE OF NORTH CAROLINA
DEPARTMENT OF TRANSPORTATION
RALEIGH

STANDARD

RIP RAP DETAILS

PLAN PREPARED BY:

Founded 1998

ALPHA & OMEGA GROUP
CIVIL | STRUCTURAL | WATER RESOURCES

ALPHA AND OMEGA GROUP, PC
4601 LAKE BOONE TRAIL, SUITE 3C, RALEIGH, NC 27607

Firm License No. C-1684 www.aogroup.com
A&O PROJECT NO. : 2021.058

DocuSigned by:
A8C764871F8049C...
10/13/2022

DOCUMENT NOT CONSIDERED FINAL UNLESS ALL SIGNATURES COMPLETED

REVISIONS							
NO.	BY:	DATE:	NO.	BY:	DATE:		
1			3				
2			4				

SHEET NO. S-23

TOTAL SHEETS 25

ASSEMBLED BY :	CT STONE	DATE :	5/10/22
CHECKED BY :	TG ZEBLO	DATE :	5/10/22
DRAWN BY : REK 1/84	REV. 10/1/11	MAA/GM	
CHECKED BY : RDU 1/84	REV. 12/21/11	MAA/GM	
	REV. 12/17	MAA/THC	

$$$$$$$SYSTIME$$$$$
$$$$$$$$$$$$$$$$$$$$$$$$DGN$$$$$$$$$$$$$$$$$$$$$$$$
$$$$USERNAME$$$$

STD. NO. RR1 (Sht 2)

DocuSign Envelope ID: 511E2674-2F53-4235-A756-D5E21CB30F26

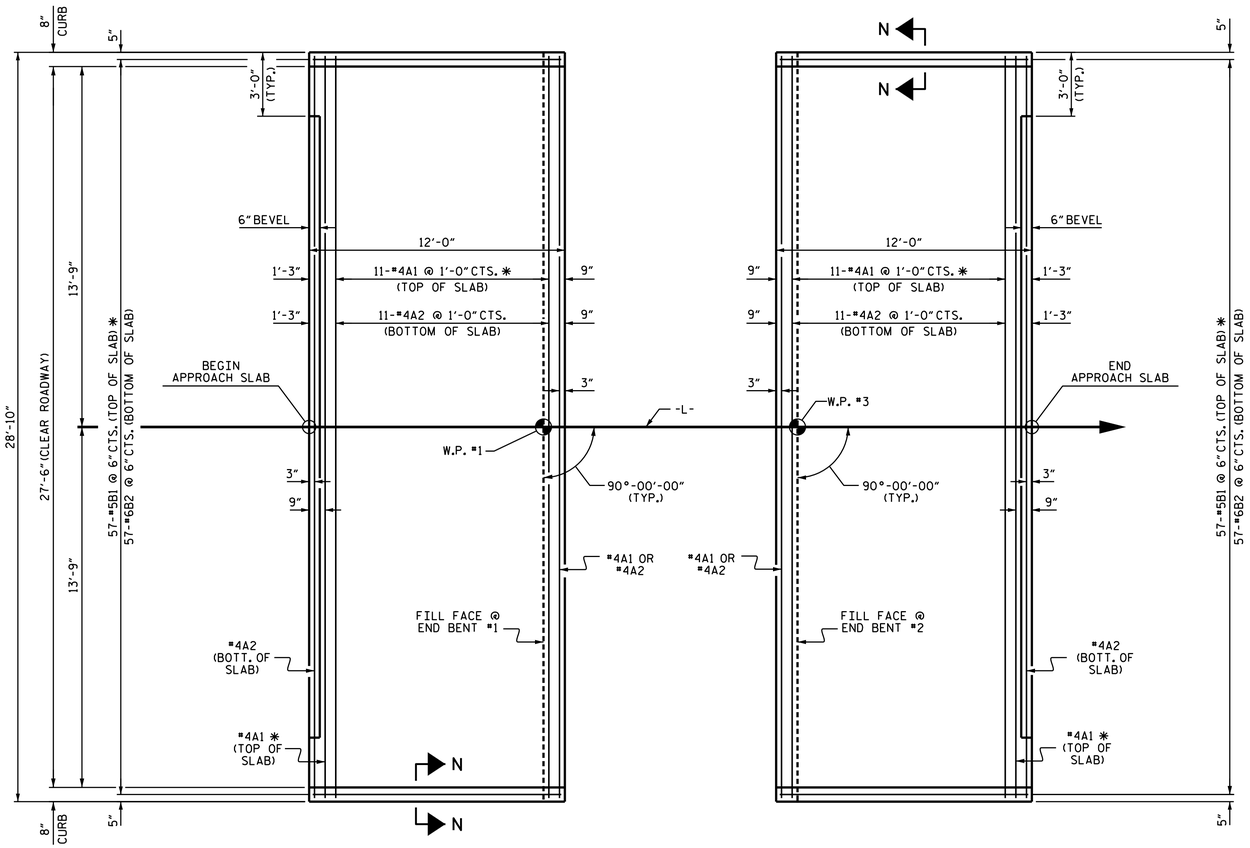

PLAN @ END BENT #1

PLAN @ END BENT #2

DIMENSIONS SHOWN ARE TYPICAL FOR BOTH APPROACH SLABS.

NOTES

FOR BRIDGE APPROACH FILL INCLUDING GEOTEXTILE, 4"Ø DRAINAGE PIPE, AND SELECT MATERIAL BACKFILL, SEE ROADWAY PLANS.

GEOTEXTILE SHALL BE TYPE 1 IN ACCORDANCE WITH THE STANDARD SPECIFICATIONS SECTION 1056.

SELECT MATERIAL BACKFILL (CLASS V OR CLASS VI) SHALL BE IN ACCORDANCE WITH STANDARD SPECIFICATIONS SECTION 1016.

SELECT MATERIAL BACKFILL IS TO BE CONTINUOUS ALONG FILL FACE OF BACKWALL FROM OUTSIDE EDGE TO OUTSIDE EDGE OF APPROACH SLAB.

FOR THE 4"Ø DRAINAGE PIPE OUTLET(S), SEE ROADWAY STANDARD DRAWINGS.

AREA BETWEEN THE WINGWALL AND APPROACH SLAB SHALL BE GRADED TO DRAIN THE WATER AWAY FROM THE FILL FACE OF THE BRIDGE AND SHALL BE PAVED. SEE ROADWAY PLANS.

APPROACH SLAB GROOVING IS NOT REQUIRED.

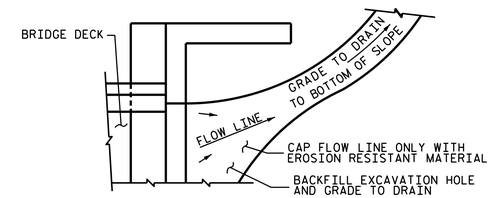

NOTE: IF THE APPROACH SLAB IS NOT CONSTRUCTED IMMEDIATELY AFTER THE BACKFILLING OF THE END BENT EXCAVATION, GRADE TO DRAIN TO THE BOTTOM OF THE SLOPE AND PROVIDE EROSION RESISTANT MATERIAL, SUCH AS FIBERGLASS ROVING OR AS DIRECTED BY THE ENGINEER TO PREVENT SOIL EROSION AND TO PROTECT THE AREA ADJACENT TO THE STRUCTURE. THE CONTRACTOR WILL BE REQUIRED TO REMOVE THESE MATERIALS PRIOR TO CONSTRUCTION OF THE APPROACH SLAB.

TEMPORARY DRAINAGE DETAIL

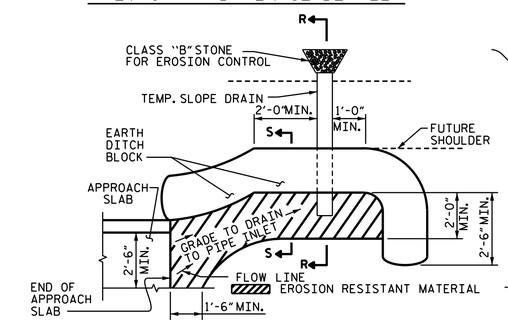

NOTE: IMMEDIATELY AFTER THE CONSTRUCTION OF THE APPROACH SLAB, THE CONTRACTOR SHALL PROVIDE TEMPORARY BERM AND SLOPE DRAIN. CONTRACTOR SHALL GRADE TO PIPE INLET AND PROVIDE EROSION RESISTANT MATERIAL AS SHOWN. THE EROSION RESISTANT MATERIAL SHALL BE EITHER 1) ASPHALT PLANT MIX, TYPE 1 OR TYPE 2, MIN. 2" DEPTH, 2) EROSION CONTROL MAT, OR 3) CONCRETE, AS DIRECTED BY THE ENGINEER. THE SLOPE DRAIN SHALL CONSIST OF A NON-PERFORATED TEMPORARY DRAINAGE PIPE, 12 INCHES IN DIAMETER.

PLAN VIEW

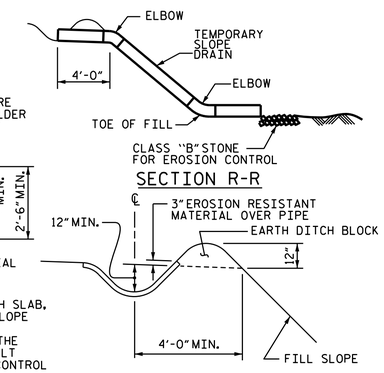

SECTION S-S

TEMPORARY BERM AND SLOPE DRAIN DETAILS

(TO BE USED WHEN SHOULDER BERM GUTTER IS REQUIRED)

BILL OF MATERIAL

APPROACH SLAB AT EB #1

BAR	NO.	SIZE	TYPE	LENGTH	WEIGHT
✱ A1	13	#4	STR	28'-6"	247
A2	13	#4	STR	28'-6"	247
✱ B1	57	#5	STR	11'-2"	664
B2	57	#6	STR	11'-8"	999
REINFORCING STEEL				LBS.	1246
✱ EPOXY COATED REINFORCING STEEL				LBS.	911
CLASS AA CONCRETE				C. Y.	16.4

APPROACH SLAB AT EB #2

BAR	NO.	SIZE	TYPE	LENGTH	WEIGHT
✱ A1	13	#4	STR	28'-6"	247
A2	13	#4	STR	28'-6"	247
✱ B1	57	#5	STR	11'-2"	664
B2	57	#6	STR	11'-8"	999
REINFORCING STEEL				LBS.	1246
✱ EPOXY COATED REINFORCING STEEL				LBS.	911
CLASS AA CONCRETE				C. Y.	17.1

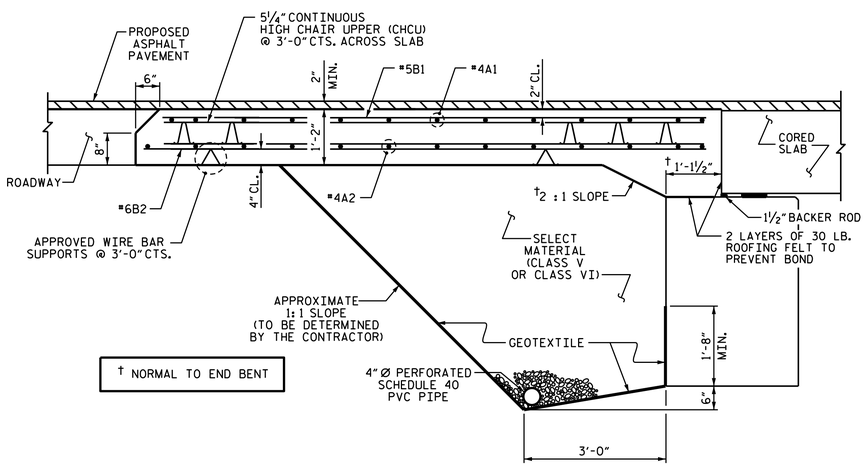

† NORMAL TO END BENT

SECTION THRU SLAB

(TYPE II - MODIFIED APPROACH FILL)

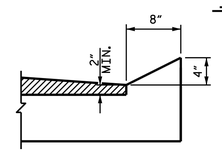

SECTION N-N

CURB DETAILS

SPLICE LENGTHS		
BAR SIZE	EPOXY COATED	UNCOATED
#4	1'-11"	1'-7"
#5	2'-5"	2'-0"
#6	3'-7"	2'-5"

PROJECT NO. BP2.R001.1

CRAVEN COUNTY

STATION: 20+61.00 -L-

ASSEMBLED BY : CT STONE	DATE : 5/10/22		
CHECKED BY : TG ZEBLO	DATE : 5/10/22		
DRAWN BY : SHS/MAA 5-09	REV. 12-17	MAA/THC	
CHECKED BY : BCH 5-09	REV. 08-19	BNB/THC	

PLAN PREPARED BY:

Founded 1998

ALPHA & OMEGA GROUP
CIVIL | STRUCTURAL | WATER RESOURCES

ALPHA AND OMEGA GROUP, PC
4601 LAKE BOONE TRAIL, SUITE 3C, RALEIGH, NC 27607

Firm License No. C-1684 www.aogroup.com
A&O PROJECT NO. : 2021.058

THIS DRAWING REVIWED AND ADOPTED FOR USE AT THE REFERENCED LOCATION BY THE UNDERSIGNED:

DocuSigned by:
A8C764871F8649C...
10/13/2022

DOCUMENT NOT CONSIDERED FINAL UNLESS ALL SIGNATURES COMPLETED

STATE OF NORTH CAROLINA
DEPARTMENT OF TRANSPORTATION
RALEIGH

STANDARD
BRIDGE APPROACH SLAB
FOR PRESTRESSED CONCRETE
CORED SLAB UNIT
(SUB-REGIONAL TIER)
90° SKEW

REVISIONS						SHEET NO.
NO.	BY:	DATE:	NO.	BY:	DATE:	S-24
1			3			TOTAL SHEETS
2			4			25

STD. NO. BAS_36_90S

$$$$$$SYSTIME$$$$$
$$$$$$$$$$$$$$$$$$$$$$$$DGN$$$$$$$$$$$$$$$$$$$$$$$$
$$$$USERNAME$$$$

STANDARD NOTES

DESIGN DATA:

SPECIFICATIONS	A.A.S.H.T.O. (CURRENT)
LIVE LOAD	SEE PLANS
IMPACT ALLOWANCE	SEE A.A.S.H.T.O.
STRESS IN EXTREME FIBER OF STRUCTURAL STEEL - AASHTO M270 GRADE 36	20,000 LBS. PER SQ. IN.
- AASHTO M270 GRADE 50W	27,000 LBS. PER SQ. IN.
- AASHTO M270 GRADE 50	27,000 LBS. PER SQ. IN.
REINFORCING STEEL IN TENSION - GRADE 60	24,000 LBS. PER SQ. IN.
CONCRETE IN COMPRESSION	1,200 LBS. PER SQ. IN.
CONCRETE IN SHEAR	SEE A.A.S.H.T.O.
STRUCTURAL TIMBER - TREATED OR UNTREATED EXTREME FIBER STRESS	1,800 LBS. PER SQ. IN.
COMPRESSION PERPENDICULAR TO GRAIN OF TIMBER	375 LBS. PER SQ. IN.
EQUIVALENT FLUID PRESSURE OF EARTH	30 LBS. PER CU. FT. (MINIMUM)

MATERIAL AND WORKMANSHIP:

EXCEPT AS MAY OTHERWISE BE SPECIFIED ON PLANS OR IN THE SPECIAL PROVISIONS, ALL MATERIAL AND WORKMANSHIP SHALL BE IN ACCORDANCE WITH THE 2018 "STANDARD SPECIFICATIONS FOR ROADS AND STRUCTURES" OF THE N. C. DEPARTMENT OF TRANSPORTATION.

STEEL SHEET PILING FOR PERMANENT OR TEMPORARY APPLICATIONS SHALL BE HOT ROLLED.

CONCRETE:

UNLESS OTHERWISE REQUIRED ON PLANS, CLASS A CONCRETE SHALL BE USED FOR ALL PORTIONS OF ALL STRUCTURES WITH THE EXCEPTION THAT: CLASS AA CONCRETE SHALL BE USED IN BRIDGE SUPERSTRUCTURES, ABUTMENT BACKWALLS, AND APPROACH SLABS; AND CLASS B CONCRETE SHALL BE USED FOR SLOPE PROTECTION AND RIP RAP.

CONCRETE CHAMFERS:

UNLESS OTHERWISE NOTED ON THE PLANS, ALL EXPOSED CORNERS ON STRUCTURES SHALL BE CHAMFERED ¾" WITH THE FOLLOWING EXCEPTIONS: TOP CORNERS OF CURBS MAY BE ROUNDED TO 1½" RADIUS WHICH IS BUILT INTO CURB FORMS; CORNERS OF TRANSVERSE FLOOR EXPANSION JOINTS SHALL BE ROUNDED WITH A ¼" FINISHING TOOL UNLESS OTHERWISE REQUIRED ON PLANS; AND CORNERS OF EXPANSION JOINTS IN THE ROADWAY FACES AND TOPS OF CURBS AND SIDEWALKS SHALL BE ROUNDED TO A ¼" RADIUS WITH A FINISHING STONE OR TOOL UNLESS OTHERWISE REQUIRED ON PLANS.

DOWELS:

DOWELS WHEN INDICATED ON PLANS AS FOR CULVERT EXTENSIONS, SHALL BE EMBEDDED AT LEAST 12" INTO THE OLD CONCRETE AND GROUTED INTO PLACE WITH 1:2 CEMENT MORTAR.

ALLOWANCE FOR DEAD LOAD DEFLECTION, SETTLEMENT, ETC. IN CASTING SUPERSTRUCTURES:

BRIDGES SHALL BE BUILT ON THE GRADE OR VERTICAL CURVE SHOWN ON PLANS. SLABS, CURBS AND PARAPETS SHALL CONFORM TO THE GRADE OR CURVE.

ALL DIMENSIONS WHICH ARE GIVEN IN SECTION AND ARE AFFECTED BY DEAD LOAD DEFLECTIONS ARE DIMENSIONS AT CENTER LINE OF BEARING UNLESS OTHERWISE NOTED ON PLANS. IN SETTING FORMS FOR STEEL BEAM BRIDGES AND PRESTRESSED CONCRETE GIRDER BRIDGES, ADJUSTMENTS SHALL BE MADE DUE TO THE DEAD LOAD DEFLECTIONS FOR THE ELEVATIONS SHOWN. WHERE BLOCKS ARE SHOWN OVER BEAMS FOR BUILDING UP TO THE SLAB, THE VERTICAL DIMENSIONS OF THE BLOCKS SHALL BE ADJUSTED BETWEEN BEARINGS TO COMPENSATE FOR DEAD LOAD DEFLECTIONS, VERTICAL CURVE ORDINATE, AND ACTUAL BEAM CAMBER. WHERE BOTTOM OF SLAB IS IN LINE WITH BOTTOM OF TOP FLANGES, DEPTH OF SLAB BETWEEN BEARINGS SHALL BE ADJUSTED TO COMPENSATE FOR DEAD LOAD DEFLECTION, VERTICAL CURVE ORDINATE, AND ACTUAL BEAM CAMBER.

IN SETTING FALSEWORK AND FORMS FOR REINFORCED CONCRETE SPANS, AN ALLOWANCE SHALL BE MADE FOR DEAD LOAD DEFLECTIONS, SETTLEMENT OF FALSEWORK, AND PERMANENT CAMBER WHICH SHALL BE PROVIDED FOR IN ADDITION TO THE ELEVATIONS SHOWN. AFTER REMOVAL OF THE FALSEWORK, THE FINISHED STRUCTURES SHALL CONFORM TO THE PROFILE AND ELEVATIONS SHOWN ON THE PLANS AND CONSTRUCTION ELEVATIONS FURNISHED BY THE ENGINEER.

DETAILED DRAWINGS FOR FALSEWORK OR FORMS FOR BRIDGE SUPERSTRUCTURE AND ANY STRUCTURE OR PARTS OF A STRUCTURE AS NOTED ON THE PLANS SHALL BE SUBMITTED TO THE ENGINEER FOR APPROVAL BEFORE CONSTRUCTION OF THE FALSEWORK OR FORMS IS STARTED.

REINFORCING STEEL:

ALL REINFORCING STEEL SHALL BE DEFORMED. DIMENSIONS RELATIVE TO PLACEMENT OF REINFORCING ARE TO CENTERS OF BARS UNLESS OTHERWISE INDICATED IN THE PLANS. DIMENSIONS ON BAR DETAILS ARE TO CENTERS OF BARS OR ARE OUT TO OUT AS INDICATED ON PLANS.

WIRE BAR SUPPORTS SHALL BE PROVIDED FOR REINFORCING STEEL WHERE INDICATED ON THE PLANS. WHEN BAR SUPPORT PIECES ARE PLACED IN CONTINUOUS LINES, THEY SHALL BE SO PLACED THAT THE ENDS OF THE SUPPORTING WIRES SHALL BE LAPPED TO LOCK LEGS ON ADJOINING PIECES.

STRUCTURAL STEEL:

AT THE CONTRACTOR'S OPTION, HE MAY SUBSTITUTE ⅞" Ø SHEAR STUDS FOR THE ¾" Ø STUDS SPECIFIED ON THE PLANS. THIS SUBSTITUTION SHALL BE MADE AT THE RATE OF 3 - ⅞" Ø STUDS FOR 4 - ¾" Ø STUDS, AND STUD SPACING CHANGES SHALL BE MADE AS NECESSARY TO PROVIDE THE SAME EQUIVALENT NUMBER OF ⅞" Ø STUDS ALONG THE BEAM AS SHOWN FOR ¾" Ø STUDS BASED ON THE RATIO OF 3 - ⅞" Ø STUDS FOR 4 - ¾" Ø STUDS. STUDS OF THE LENGTH SPECIFIED ON THE PLANS MUST BE PROVIDED. THE MAXIMUM SPACING SHALL BE 2'-0".

EXCEPT AT THE INTERIOR SUPPORTS OF CONTINUOUS BEAMS WHERE THE COVER PLATE IS IN CONTACT WITH BEARING PLATE, THE CONTRACTOR MAY, AT HIS OPTION, SUBSTITUTE FOR THE COVER PLATES DESIGNATED ON THE PLANS COVER PLATES OF THE EQUIVALENT AREA PROVIDED THESE PLATES ARE AT LEAST 5/16" IN THICKNESS AND DO NOT EXCEED A WIDTH EQUAL TO THE FLANGE WIDTH LESS 2" OR A THICKNESS EQUAL TO 2 TIMES THE FLANGE THICKNESS. THE SIZE OF FILLET WELDS SHALL CONFORM TO THE REQUIREMENTS OF THE CURRENT ANSI/AASHTO/AWS "BRIDGE WELDING CODE". ELECTROSLAG WELDING WILL NOT BE PERMITTED.

WITH THE SOLE EXCEPTION OF EDGES AT SURFACES WHICH BEAR ON OTHER SURFACES, ALL SHARP EDGES AND ENDS OF SHAPES AND PLATES SHALL BE SLIGHTLY ROUNDED BY SUITABLE MEANS TO A RADIUS OF APPROXIMATELY 1/16 INCH OR EQUIVALENT FLAT SURFACE AT A SUITABLE ANGLE PRIOR TO PAINTING, GALVANIZING, OR METALLIZING.

HANDRAILS AND POSTS:

METAL STANDARDS AND FACES OF THE CONCRETE END POSTS FOR THE METAL RAIL SHALL BE SET NORMAL TO THE GRADE OF THE CURB, UNLESS OTHERWISE SHOWN ON PLANS. THE METAL RAIL AND TOPS OF CONCRETE POSTS USED WITH THE ALUMINUM RAIL SHALL BE BUILT PARALLEL TO THE GRADE OF THE CURB.

METAL HANDRAILS SHALL BE IN ACCORDANCE WITH THE PLANS. RAILS SHALL BE AS MANUFACTURED FOR BRIDGE RAILING. CASTINGS SHALL BE OF A UNIFORM APPEARANCE. FINS AND OTHER DEFORMATIONS RESULTING FROM CASTING OR OTHERWISE SHALL BE REMOVED IN A MANNER SO THAT A UNIFORM COLORING OF THE COMPLETED CASTING SHALL BE OBTAINED. CASTINGS WITH DISCOLORATIONS OR OF NON-UNIFORM COLORING WILL NOT BE ACCEPTED. CERTIFIED MILL REPORTS ARE REQUIRED FOR METAL RAILS AND POSTS.

SPECIAL NOTES:

GENERALLY, IN CASE OF DISCREPANCY, THIS STANDARD SHEET OF NOTES SHALL GOVERN OVER THE SPECIFICATIONS, BUT THE REMAINDER OF THE PLANS SHALL GOVERN OVER NOTES HEREON, AND SPECIAL PROVISIONS SHALL GOVERN OVER ALL. SEE SPECIFICATIONS ARTICLE 105-4.

ENGLISH

JANUARY, 1990