DocuSign Envelope ID: EAA475DF-956B-4B71-AC72-AAC1B1C6F574

09/08/99

TIP PROJECT: B-4563

CONTRACT: DB00397

STATE OF NORTH CAROLINA
DIVISION OF HIGHWAYS

JONES COUNTY

STATE	STATE PROJECT REFERENCE NO.	SHEET NO.	TOTAL SHEETS
N.C.	B-4563	1	

STATE PROJ. NO.	F.A. PROJ. NO.	DESCRIPTION
38411.1.2		PE
38411.2.1		R/W, UTIL.
38411.3.1		CONST

LOCATION: REPLACE BRIDGE #6 OVER BIG CHINQUAPIN CREEK ON SR 1301

TYPE OF WORK: BRIDGE REPLACEMENT, GUARDRAIL, PAVING, GRADING AND DRAINAGE

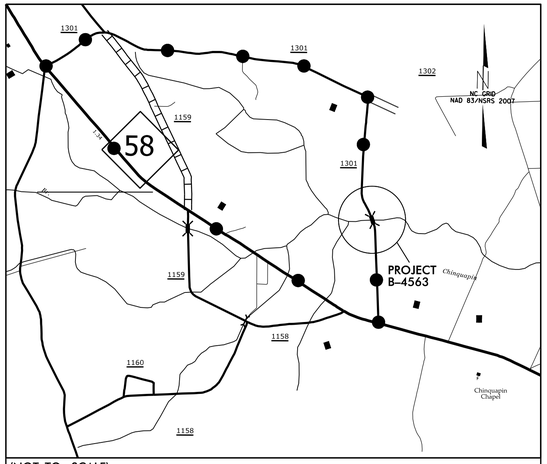

(NOT TO SCALE) VICINITY MAP

OFFSITE DETOUR

See Sheet 1A For Index of Sheets
See Sheet 1B For Conventional Symbols

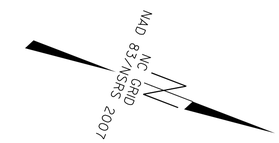

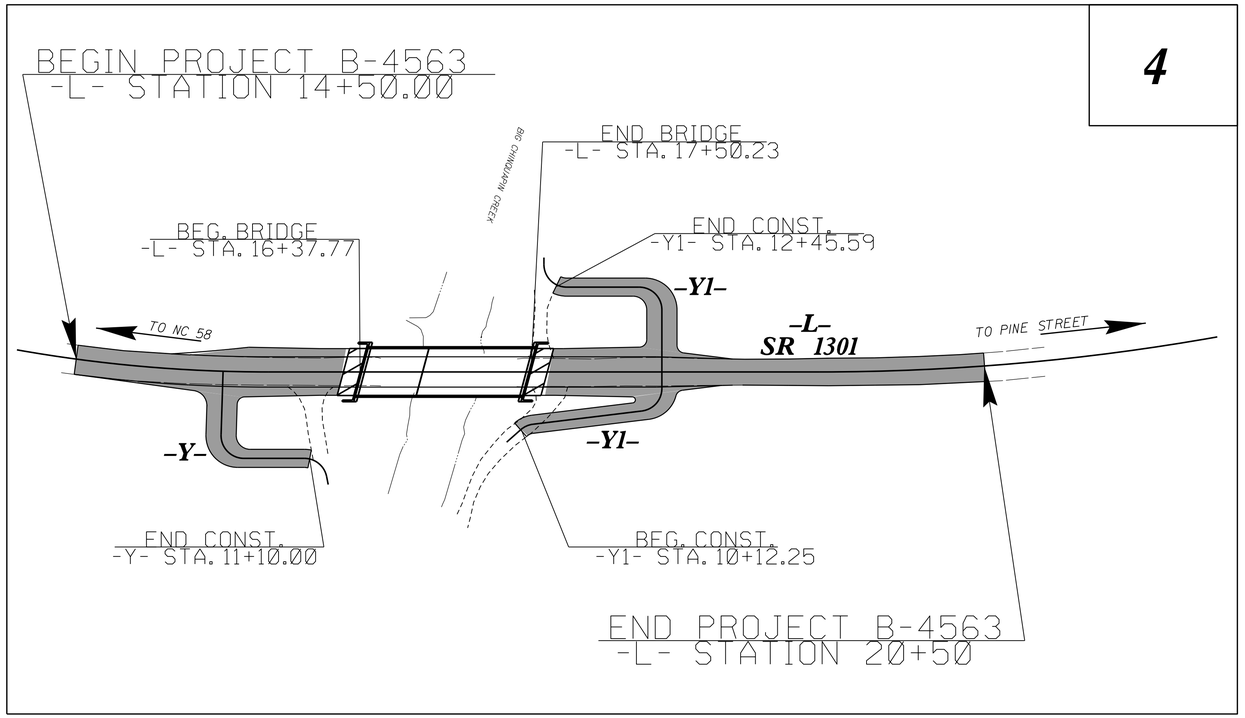

GRAPHIC SCALES

50 25 0 50 100
PLANS

50 25 0 50 100
PROFILE (HORIZONTAL)

10 5 0 10 20
PROFILE (VERTICAL)

PROJECT LENGTH

LENGTH ROADWAY PROJECT B-4536 = 0.093 MILE
LENGTH STRUCTURE PROJECT B-4536 = .021 MILE
TOTAL LENGTH PROJECT B-4536 = 0.114 MILE

Prepared for the North Carolina Department of Transportation in the Office of:

WETHERILL ENGINEERING
1223 JONES FRANKLIN ROAD
Raleigh, N.C. 27606
License No. F-0377
Bus: 919 851 8077
Fax: 919 851 8107

2018 STANDARD SPECIFICATIONS

RIGHT OF WAY DATE: JUNE 2017

LETTING DATE: MAY 2018

NCDOT CONTACT: LANG JONES
DIVISION 2 DDC CONTACT

EDWARD G. WETHERILL, PE
PROJECT ENGINEER

BOB A. MAY, PE
PROJECT DESIGN ENGINEER

HYDRAULICS ENGINEER
4/5/2018
NORTH CAROLINA PROFESSIONAL SEAL 34349 ENGINEER PAUL A. JORDAN, P.E.
DocuSigned by: Paul A. Jordan
SIGNATURE:

ROADWAY DESIGN ENGINEER
3/26/2018
NORTH CAROLINA PROFESSIONAL SEAL 21116 ENGINEER BOB A. MAY, P.E.
DocuSigned by: Bob A. May
SIGNATURE:

STATE OF NORTH CAROLINA DEPARTMENT OF TRANSPORTATION

3/23/2018
R:\Roadway\Proj\jones6_pshl.dgn
USER:bmay

DocuSign Envelope ID: F93BE7B9-224D-49AF-90B7-52E041F876E6

8/17/99

PROJECT REFERENCE NO.	SHEET NO.
B-4563	1A

ROADWAY DESIGN ENGINEER
3/26/2018

NORTH CAROLINA PROFESSIONAL SEAL 21116 ENGINEER BOB A. MAY

DocuSigned by:
Bob A. May

DOCUMENT NOT CONSIDERED FINAL UNLESS ALL SIGNATURES COMPLETED

INDEX OF SHEETS

SHEET NUMBER	SHEET
1	TITLE SHEET
1A	INDEX OF SHEETS, GENERAL NOTES, AND STANDARD DRAWINGS
1B	CONVENTIONAL SYMBOLS
2A-1	PAVEMENT SCHEDULE AND TYPICAL SECTIONS
2C-1	SPECIAL DETAIL FOR W BEAM RAIL SECTION
2C-2	SPECIAL DETAIL FOR TYPE III ANCHOR UNIT
3B-1	ROADWAY & DRAINAGE SUMMARIES
4	PLAN AND PROFILE SHEET
TMP-1 THRU TMP-3	TRAFFIC MANAGEMENT PLANS
PMP-1 THRU PMP-2	PAVEMENT MARKING PLANS
EC-1 THRU EC-5	EROSION CONTROL PLANS
RF-1	REFORESTATION PLANS
UC-1 THRU UC-4	UTILITY CONSTRUCTION PLANS
UO-1 THRU UO-2	UTILITIES BY OTHERS PLANS
X-1	CROSS-SECTION SUMMARY SHEET
X-2 THRU X-9	CROSS-SECTIONS
S-1 THRU S-19	STRUCTURE PLANS
	STRUCTURE STANDARD NOTES

GENERAL NOTES: 2018 SPECIFICATIONS

EFFECTIVE: 01-16-2018
REVISED:

GRADING AND SURFACING OR RESURFACING AND WIDENING:

THE GRADE LINES SHOWN DENOTE THE FINISHED ELEVATION OF THE PROPOSED SURFACING AT GRADE POINTS SHOWN ON THE TYPICAL SECTIONS. WHERE NO GRADE LINES ARE SHOWN, THE PROFILES SHOWN DENOTE THE TOP ELEVATION OF THE EXISTING PAVEMENT ALONG THE CENTER LINE OF SURVEY ON WHICH THE PROPOSED RESURFACING WILL BE PLACED. GRADE LINES MAY BE ADJUSTED BY THE ENGINEER IN ORDER TO SECURE A PROPER TIE-IN.

CLEARING:

CLEARING ON THIS PROJECT SHALL BE PERFORMED TO THE LIMITS ESTABLISHED BY METHOD III.

SUPERELEVATION:

ALL CURVES ON THIS PROJECT SHALL BE SUPERELEVATED IN ACCORDANCE WITH STD. NO. 225.05 USING THE RATE OF SUPERELEVATION AND RUNOFF SHOWN ON THE PLANS. SUPERELEVATION IS TO BE REVOLVED ABOUT THE GRADE POINTS SHOWN ON THE TYPICAL SECTIONS.

SHOULDER CONSTRUCTION:

ASPHALT, EARTH, AND CONCRETE SHOULDER CONSTRUCTION ON THE HIGH SIDE OF SUPERELEVATED CURVES SHALL BE IN ACCORDANCE WITH STD. NO. 560.02

SIDE ROADS:

THE CONTRACTOR WILL BE REQUIRED TO DO ALL NECESSARY WORK TO PROVIDE SUITABLE CONNECTIONS WITH ALL ROADS, STREETS, AND DRIVES ENTERING THIS PROJECT. THIS WORK WILL BE PAID FOR AT THE CONTRACT UNIT PRICE FOR THE PARTICULAR ITEMS INVOLVED.

UNDERDRAINS:

UNDERDRAINS SHALL BE CONSTRUCTED IN ACCORDANCE WITH STD. NO. 815.03 AT LOCATIONS DIRECTED BY THE ENGINEER.

GUARDRAIL:

THE GUARDRAIL LOCATIONS SHOWN ON THE PLANS MAY BE ADJUSTED DURING CONSTRUCTION AS DIRECTED BY THE ENGINEER. THE CONTRACTOR SHOULD CONSULT WITH THE ENGINEER PRIOR TO ORDERING GUARDRAIL MATERIAL.

SUBSURFACE PLANS:

NO SUBSURFACE PLANS ARE AVAILABLE ON THIS PROJECT. THE CONTRACTOR SHOULD MAKE HIS OWN INVESTIGATION AS TO THE SUBSURFACE CONDITIONS.

END BENTS:

THE ENGINEER SHALL CHECK THE STRUCTURE END BENT PLANS, DETAILS, AND CROSS-SECTION PRIOR TO SETTING OF THE SLOPE STAKES FOR THE EMBANKMENT OR EXCAVATION APPROACHING A BRIDGE.

UTILITIES:

UTILITY OWNERS ON THIS PROJECT ARE CENTURY LINK AND JONES COUNTY REGIONAL WATER SYSTEM.

ANY RELOCATION OF EXISTING UTILITIES WILL BE ACCOMPLISHED BY OTHERS.

ANY RELOCATION OF EXISTING UTILITIES WILL BE ACCOMPLISHED BY OTHERS, EXCEPT AS SHOWN ON THE PLANS.

RIGHT-OF-WAY MARKERS:

ALL RIGHT-OF-WAY MARKERS ON THIS PROJECT SHALL BE PLACED BY OTHERS.

EFF. 01-16-2018
REV.

2018 ROADWAY ENGLISH STANDARD DRAWINGS

The following Roadway Standards as appear in "Roadway Standard Drawings" Highway Design Branch – N. C. Department of Transportation – Raleigh, N. C., Dated January, 2018 are applicable to this project and by reference hereby are considered a part of these plans:

STD.NO. TITLE

DIVISION 2 – EARTHWORK

200.03 Method of Clearing – Method III
225.02 Guide for Grading Subgrade – Secondary and Local
225.04 Method of Obtaining Superelevation – Two Lane Pavement

DIVISION 3 – PIPE CULVERTS

300.01 Method of Pipe Installation
310.10 Driveway Pipe Construction

DIVISION 4 – MAJOR STRUCTURES

422.02 Bridge Approach Fills – Type II Modified Approach Fill

DIVISION 5 – SUBGRADE, BASES AND SHOULDERS

560.01 Method of Shoulder Construction – High Side of Superelevated Curve – Method 1

DIVISION 8 – INCIDENTALS

815.03 Pipe Underdrain and Blind Drain
840.00 Concrete Base Pad for Drainage Structures
840.18 Concrete Grated Drop Inlet Type 'B' – 12" thru 36" Pipe
840.24 Frames and Narrow Slot Sag Grates
840.27 Brick Grated Drop Inlet Type 'B' – 12" thru 36" Pipe
840.29 Frames and Narrow Slot Flat Grates
840.45 Precast Drainage Structure
840.46 Traffic Bearing Precast Drainage Structure
840.66 Drainage Structure Steps
846.01 Concrete Curb, Gutter and Curb & Gutter
862.01 Guardrail Placement
862.02 Guardrail Installation (Special Detail for Sheet 6 of 8)
862.03 Structure Anchor Units (Special Detail for Type III Anchor Units Sheets 1 of 7 and 2 of 7)
876.02 Guide for Rip Rap at Pipe Outlets

3/26/2018
R:\Roadway\Proj\jones6_psh1.dgn
lisfkinney

DocuSign Envelope ID: F93BE7B9-224D-49AF-90B7-52E041F876E6

12/2/2016

PROJECT REFERENCE NO.	SHEET NO.
B-4563	1B

STATE OF NORTH CAROLINA, DIVISION OF HIGHWAYS

CONVENTIONAL PLAN SHEET SYMBOLS

Note: Not to Scale

**S.U.E. = Subsurface Utility Engineering*

BOUNDARIES AND PROPERTY:

- State Line
- County Line
- Township Line
- City Line
- Reservation Line
- Property Line
- Existing Iron Pin — EIP
- Computed Property Corner
- Property Monument — ECM
- Parcel/Sequence Number — 123
- Existing Fence Line
- Proposed Woven Wire Fence
- Proposed Chain Link Fence
- Proposed Barbed Wire Fence
- Existing Wetland Boundary — WLB
- Proposed Wetland Boundary — WLB
- Existing Endangered Animal Boundary — EAB
- Existing Endangered Plant Boundary — EPB
- Existing Historic Property Boundary — HPB
- Known Contamination Area: Soil — S
- Potential Contamination Area: Soil — S
- Known Contamination Area: Water — W
- Potential Contamination Area: Water — W
- Contaminated Site: Known or Potential

BUILDINGS AND OTHER CULTURE:

- Gas Pump Vent or U/G Tank Cap
- Sign — S
- Well — W
- Small Mine
- Foundation
- Area Outline
- Cemetery
- Building
- School
- Church
- Dam

HYDROLOGY:

- Stream or Body of Water
- Hydro, Pool or Reservoir
- Jurisdictional Stream — JS
- Buffer Zone 1 — BZ 1
- Buffer Zone 2 — BZ 2
- Flow Arrow
- Disappearing Stream
- Spring
- Wetland
- Proposed Lateral, Tail, Head Ditch — FLOW
- False Sump

RAILROADS:

- Standard Gauge — CSX TRANSPORTATION
- RR Signal Milepost — MILEPOST 35
- Switch — SWITCH
- RR Abandoned
- RR Dismantled

RIGHT OF WAY & PROJECT CONTROL:

- Secondary Horiz and Vert Control Point
- Primary Horiz Control Point
- Primary Horiz and Vert Control Point
- Exist Permanent Easment Pin and Cap
- New Permanent Easement Pin and Cap
- Vertical Benchmark
- Existing Right of Way Marker
- Existing Right of Way Line
- New Right of Way Line — RW
- New Right of Way Line with Pin and Cap — RW
- New Right of Way Line with Concrete or Granite R/W Marker — RW
- New Control of Access Line with Concrete C/A Marker — CA
- Existing Control of Access — CA
- New Control of Access — CA
- Existing Easement Line — E
- New Temporary Construction Easement — E
- New Temporary Drainage Easement — TDE
- New Permanent Drainage Easement — PDE
- New Permanent Drainage / Utility Easement — DUE
- New Permanent Utility Easement — PUE
- New Temporary Utility Easement — TUE
- New Aerial Utility Easement — AUE

ROADS AND RELATED FEATURES:

- Existing Edge of Pavement
- Existing Curb
- Proposed Slope Stakes Cut — C
- Proposed Slope Stakes Fill — F
- Proposed Curb Ramp — CR
- Existing Metal Guardrail
- Proposed Guardrail
- Existing Cable Guiderail
- Proposed Cable Guiderail
- Equality Symbol
- Pavement Removal

VEGETATION:

- Single Tree
- Single Shrub
- Hedge
- Woods Line
- Orchard
- Vineyard — Vineyard

EXISTING STRUCTURES:

MAJOR:

- Bridge, Tunnel or Box Culvert — CONC
- Bridge Wing Wall, Head Wall and End Wall — CONC WW

MINOR:

- Head and End Wall — CONC HW
- Pipe Culvert
- Footbridge
- Drainage Box: Catch Basin, DI or JB — CB
- Paved Ditch Gutter
- Storm Sewer Manhole — S
- Storm Sewer — S

UTILITIES:

POWER:

- Existing Power Pole
- Proposed Power Pole
- Existing Joint Use Pole
- Proposed Joint Use Pole
- Power Manhole — P
- Power Line Tower
- Power Transformer
- U/G Power Cable Hand Hole
- H-Frame Pole
- U/G Power Line LOS B (S.U.E.*) — P
- U/G Power Line LOS C (S.U.E.*) — P
- U/G Power Line LOS D (S.U.E.*) — P

TELEPHONE:

- Existing Telephone Pole
- Proposed Telephone Pole
- Telephone Manhole — T
- Telephone Pedestal — T
- Telephone Cell Tower
- U/G Telephone Cable Hand Hole
- U/G Telephone Cable LOS B (S.U.E.*) — T
- U/G Telephone Cable LOS C (S.U.E.*) — T
- U/G Telephone Cable LOS D (S.U.E.*) — T
- U/G Telephone Conduit LOS B (S.U.E.*) — TC
- U/G Telephone Conduit LOS C (S.U.E.*) — TC
- U/G Telephone Conduit LOS D (S.U.E.*) — TC
- U/G Fiber Optics Cable LOS B (S.U.E.*) — T FO
- U/G Fiber Optics Cable LOS C (S.U.E.*) — T FO
- U/G Fiber Optics Cable LOS D (S.U.E.*) — T FO

WATER:

- Water Manhole — W
- Water Meter
- Water Valve
- Water Hydrant
- U/G Water Line LOS B (S.U.E*) — W
- U/G Water Line LOS C (S.U.E*) — W
- U/G Water Line LOS D (S.U.E*) — W
- Above Ground Water Line — A/G Water

TV:

- TV Pedestal — C
- TV Tower
- U/G TV Cable Hand Hole — HH
- U/G TV Cable LOS B (S.U.E.*) — TV
- U/G TV Cable LOS C (S.U.E.*) — TV
- U/G TV Cable LOS D (S.U.E.*) — TV
- U/G Fiber Optic Cable LOS B (S.U.E.*) — TV FO
- U/G Fiber Optic Cable LOS C (S.U.E.*) — TV FO
- U/G Fiber Optic Cable LOS D (S.U.E.*) — TV FO

GAS:

- Gas Valve
- Gas Meter
- U/G Gas Line LOS B (S.U.E.*) — G
- U/G Gas Line LOS C (S.U.E.*) — G
- U/G Gas Line LOS D (S.U.E.*) — G
- Above Ground Gas Line — A/G Gas

SANITARY SEWER:

- Sanitary Sewer Manhole
- Sanitary Sewer Cleanout
- U/G Sanitary Sewer Line — SS
- Above Ground Sanitary Sewer — A/G Sanitary Sewer
- SS Forced Main Line LOS B (S.U.E.*) — FSS
- SS Forced Main Line LOS C (S.U.E.*) — FSS
- SS Forced Main Line LOS D (S.U.E.*) — FSS

MISCELLANEOUS:

- Utility Pole
- Utility Pole with Base
- Utility Located Object
- Utility Traffic Signal Box — S
- Utility Unknown U/G Line LOS B (S.U.E.*) — ?UTL
- U/G Tank; Water, Gas, Oil
- Underground Storage Tank, Approx. Loc. — UST
- A/G Tank; Water, Gas, Oil
- Geoenvironmental Boring
- U/G Test Hole LOS A (S.U.E.*)
- Abandoned According to Utility Records — AATUR
- End of Information — E.O.I.

DocuSign Envelope ID: 5127C52F-CBE6-4CE0-8C2C-53C650C93DCB

8/17/99

REVISIONS

C1	PROP. APPROX. 3″ ASPHALT CONCRETE SURFACE COURSE, TYPE S9.5B, AT AN AVERAGE RATE OF 168 LBS. PER SQ.YD. IN EACH OF TWO LAYERS.
C2	PROP. VAR. DEPTH ASPHALT CONCRETE SURFACE COURSE, TYPE S9.5B, AT AN AVERAGE RATE OF 112 LBS. PER SQ.YD PER 1″ DEPTH TO BE PLACED IN LAYERS NOT TO EXCEDD 1.5″ IN DEPTH.
D1	PROP. APPROX. 3″ ASPHALT CONCRETE INTERMEDIATE COURSE, TYPE I19.0C, AT AN AVERAGE RATE OF 342 LBS. PER SQ. YD.
D2	PROP. VAR. DEPTH ASPHALT CONCRETE INTERMEDIATE COURSE, TYPE I19.0C, AT AN AVERAGE RATE OF 114 LBS. PER SQ. YD. PER 1″ DEPTH, TO BE PLACED IN LAYERS NOT LESS THAN 2½″ IN DEPTH OR GREATER THAN 4″ IN DEPTH.
E1	PROP. APPROX. 4.5″ ASPHALT CONCRETE BASE COURSE, TYPE B25.0C, AT AN AVERAGE RATE OF 513 LBS. PER SQ. YD.
E2	PROP. VAR. DEPTH ASPHALT CONCRETE SURFACE COURSE, TYPE B25.0C, AT AN AVERAGE RATE OF 114 LBS. PER SQ.YD PER 1″ DEPTH TO BE PLACED IN LAYERS NOT TO EXCEDD 5.5″ IN DEPTH.
J1	6″ AGGREGATE BASE COURSE
R1	SHOULDER BERM GUTTER
T	EARTH MATERIAL.
U	EXISTING PAVEMENT.
U1	CONCRETE CORED SLABS
W	WEDGING (SEE DETAIL)

NOTE: PAVEMENT EDGE SLOPES ARE 1:1 UNLESS SHOWN OTHERWISE.

PROJECT REFERENCE NO.	SHEET NO.
B-4563	2A-1
R/W SHEET NO.	
ROADWAY DESIGN ENGINEER 3/26/2018	PAVEMENT DESIGN ENGINEER 3/26/2018

NORTH CAROLINA PROFESSIONAL SEAL 21116 ENGINEER BOB A. MAY
DocuSigned by: Bob A. May 51D8A42429B0...

NORTH CAROLINA PROFESSIONAL SEAL 33793 ENGINEER WILLIAM C. KINCANNON
DocuSigned by: William C. Kincannon 23FF0460C57240C...

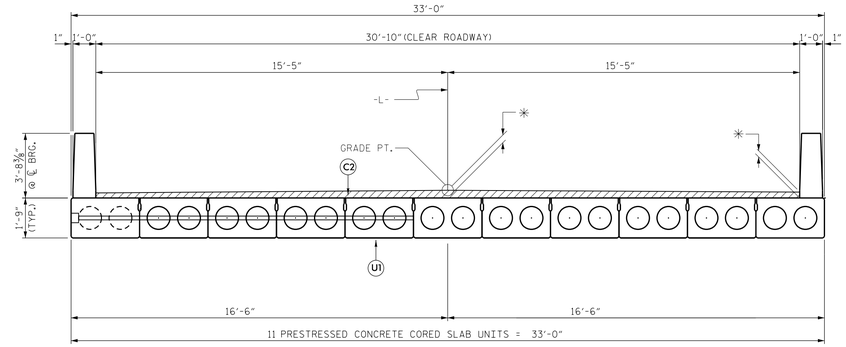

✳ SEE STRUCTURE PLANS

TYPICAL BRIDGE SECTION (NTS)

-L- 16+37.77 - 17+50.23

INCIDENTAL MILLING

-L- STA.14+50.00 - STA.14+87.50
-L- STA.20+12.50 - STA.20+50.00

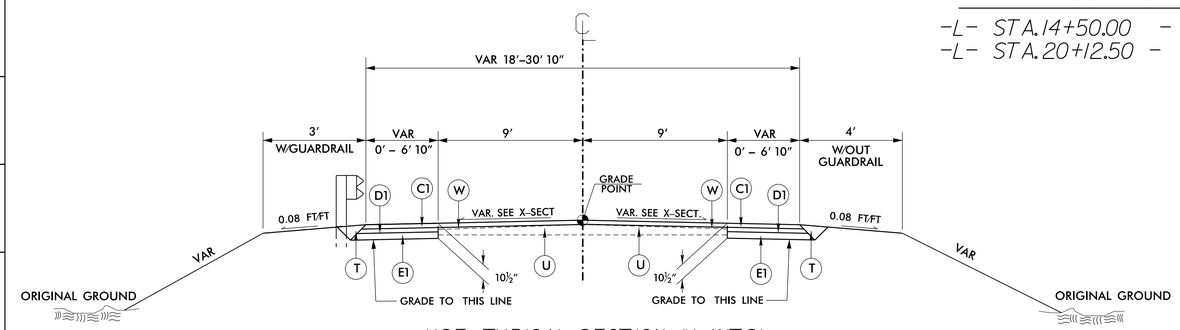

USE TYPICAL SECTION #1 (NTS)

-L- STA.14+50.00 - STA.16+11.00
-L- STA.17+61.06 - STA.20+50.00

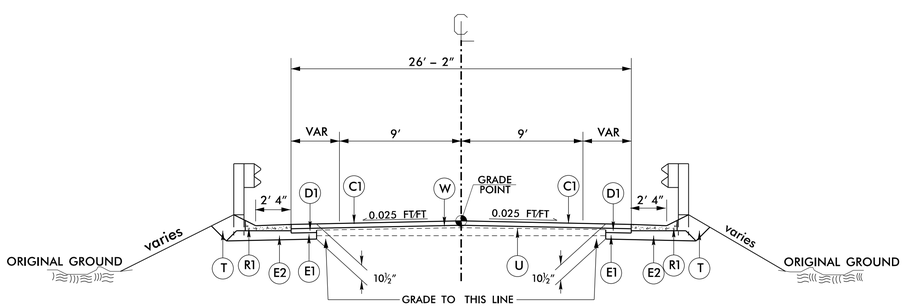

USE TYPICAL SECTION #2 (NTS)

-L- STA.16+11.00 - STA.16+23.43 RT
-L- STA.16+11.00 - STA.16+31.25 LT

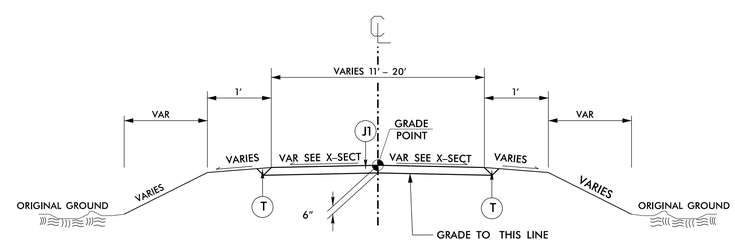

USE TYPICAL SECTION #3

-Y- 10+14.69 - 11+10.00
-Y1- 10+12.25 - 11+12.03
-Y1- 11+40.79 - 12+45.59

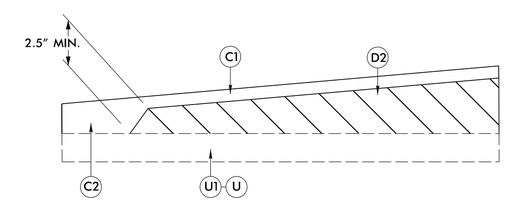

WEDGING DETAIL

NOT TO SCALE

3/26/2018
R:\Roadway\Proj\Jones6_psh2.dgn
USER:kmay

DocuSign Envelope ID: 9403F4FC-A3B1-4843-857B-3A915B9D6AC0

PROJECT REFERENCE NO.	SHEET NO.

DOCUMENT NOT CONSIDERED FINAL UNLESS ALL SIGNATURES COMPLETED

STATE OF NORTH CAROLINA
DEPT. OF TRANSPORTATION
DIVISION OF HIGHWAYS
RALEIGH, N.C.

ROADWAY DETAIL DRAWING FOR
GUARDRAIL INSTALLATION

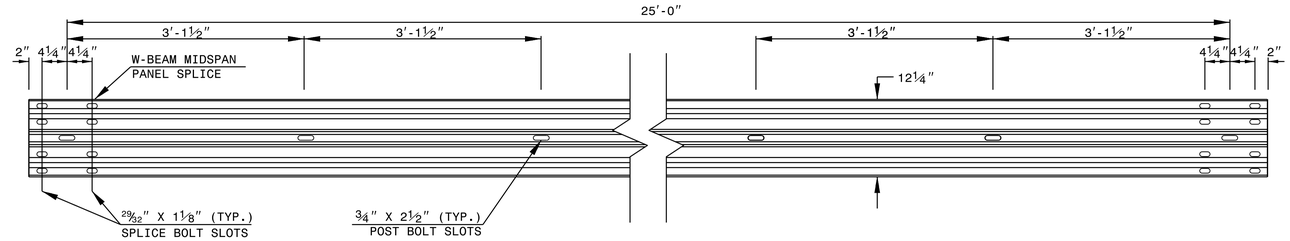

STANDARD W-BEAM GUARDRAIL

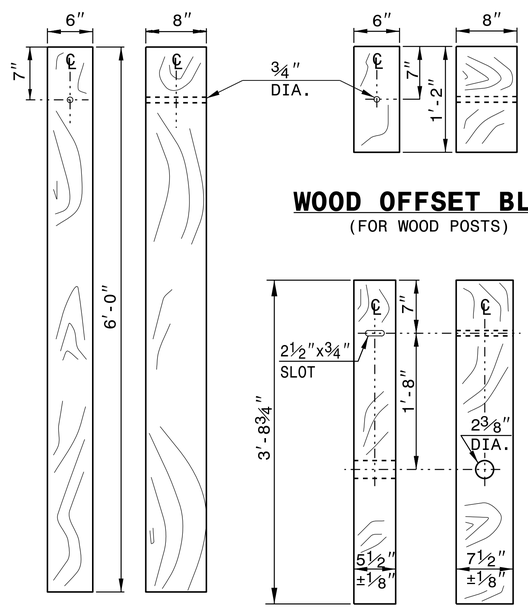

STANDARD LINE POST

SHORT WOOD BREAKAWAY POST

WOOD OFFSET BLOCK
(FOR WOOD POSTS)

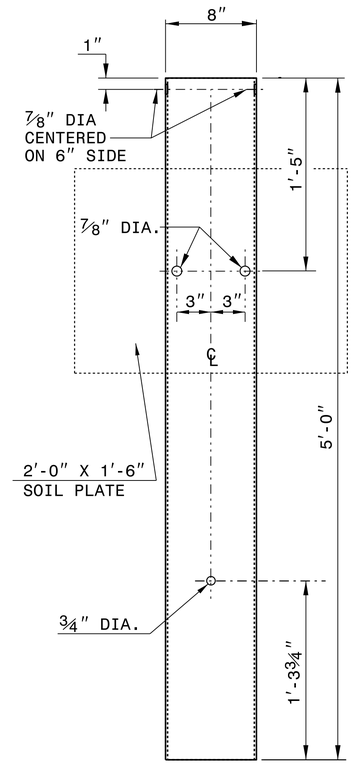

STEEL TUBE
TS 6"x8"x0.1875"

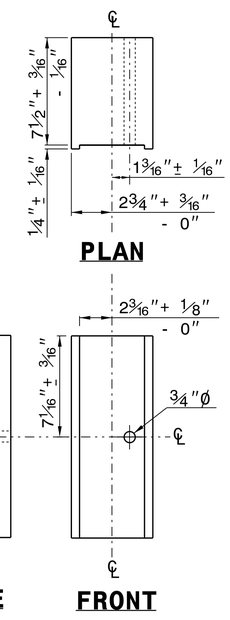

PLAN

SIDE FRONT

ROUTED OFFSET BLOCK

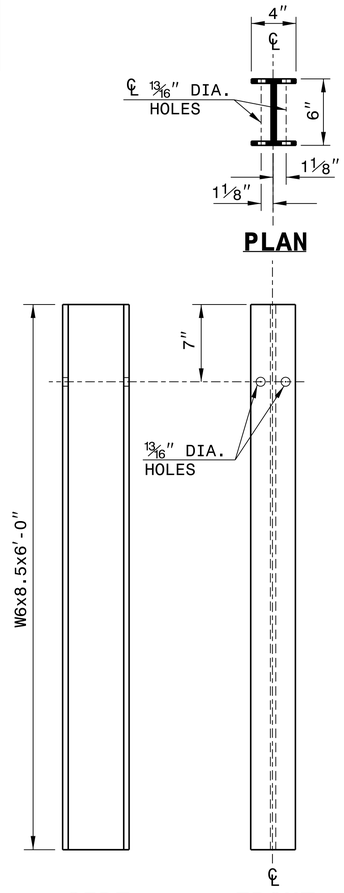

SIDE FRONT

"W6" STEEL POST

SYSTEM PARTS

SHEET 6 OF 8
862D02

STATE OF NORTH CAROLINA
DEPT. OF TRANSPORTATION
DIVISION OF HIGHWAYS
RALEIGH, N.C.

ROADWAY DETAIL DRAWING FOR
GUARDRAIL INSTALLATION

SHEET 6 OF 8
862D02

DocuSigned by: Joel S. Howerton
873F3D17DCDC45F...

NORTH CAROLINA PROFESSIONAL SEAL 022966 ENGINEER JOEL S. HOWERTON
3/27/2018

CONTRACTS STANDARDS AND DEVELOPMENT UNIT
Office 919-707-6950 FAX 919-250-4119

SEE TITLE BLOCK

ORIGINAL BY: J.HOWERTON DATE: 3-7-2018
MODIFIED BY: DATE:
CHECKED BY: DATE:
FILE SPEC.:

DocuSign Envelope ID: 94D3F4FC-A3B1-4843-B57B-3A91589D0AC0

STATE OF NORTH CAROLINA
DEPT. OF TRANSPORTATION
DIVISION OF HIGHWAYS
RALEIGH, N.C.

ROADWAY DETAIL DRAWING FOR
STRUCTURE ANCHOR UNITS
GUARDRAIL ANCHOR UNIT, TYPE III
FOR ATTACHMENT TO RAIL ON BRIDGE

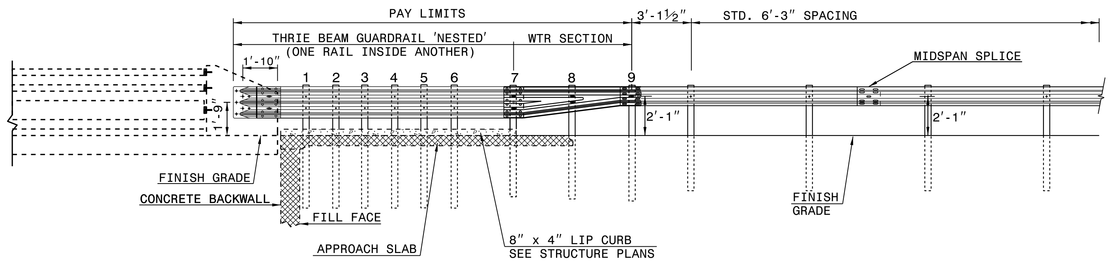

ELEVATION

NOTE:
**POST NOT REQUIRED FOR SKEW ANGLES GREATER THAN 150° OR LESS THAN 30° UNLESS OTHERWISE DIRECTED BY THE ENGINEER.
*THE DISTANCE FROM END OF BRIDGE RAIL TO CENTER LINE OF THE FIRST POST SHOULD BE 11½" IF CONCRETE BACKWALL IS NOT PRESENT.
-SHOULDER BERM GUTTER MUST BE INSTALLED TO THE LIMITS 8" x 4" LIP CURB IS SHOWN IF ANCHOR UNIT IS NOT ADJACENT TO AN APPROACH SLAB.
-MEASURE GUARDRAIL HEIGHT FROM THE TOP OF ADJACENT SURFACE (SHOULDER, BERM, OR GUTTER).
-LAP JOINTS IN THE DIRECTION OF TRAFFIC FLOW.
-SEE SHEET 3 FOR POST SECTIONS 1 THRU 9.

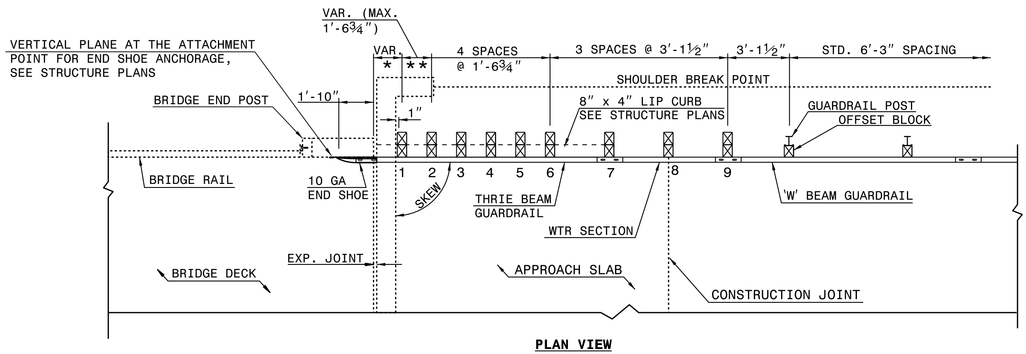

PLAN VIEW

GUARDRAIL ANCHOR UNIT, TYPE III FOR ATTACHMENT TO RAIL ON BRIDGE

SHEET 1 OF 7
862D03

STATE OF NORTH CAROLINA
DEPT. OF TRANSPORTATION
DIVISION OF HIGHWAYS
RALEIGH, N.C.

ROADWAY DETAIL DRAWING FOR
STRUCTURE ANCHOR UNITS
GUARDRAIL ANCHOR UNIT, TYPE III
FOR ATTACHMENT TO RAIL ON BRIDGE

SHEET 1 OF 7
862D03

STATE OF NORTH CAROLINA
DEPT. OF TRANSPORTATION
DIVISION OF HIGHWAYS
RALEIGH, N.C.

ROADWAY DETAIL DRAWING FOR
STRUCTURE ANCHOR UNITS
GUARDRAIL ANCHOR UNIT, TYPE III FOR ATTACHMENT TO
RAIL ON BRIDGE - SUB REGIONAL TIER

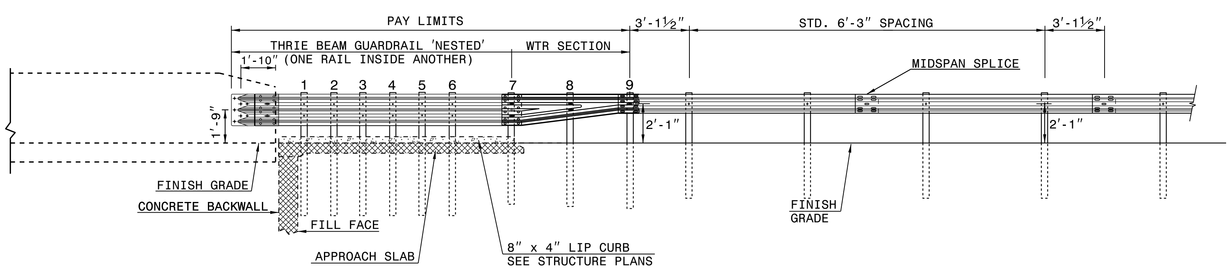

ELEVATION

NOTE:
**POST NOT REQUIRED FOR SKEW ANGLES GREATER THAN 150° OR LESS THAN 30° UNLESS OTHERWISE DIRECTED BY THE ENGINEER.
*THE DISTANCE FROM END OF BRIDGE RAIL TO CENTER LINE OF THE FIRST POST SHOULD BE 11½" IF CONCRETE BACKWALL IS NOT PRESENT.
-SHOULDER BERM GUTTER MUST BE INSTALLED TO THE LIMITS 8" x 4" LIP CURB IS SHOWN IF ANCHOR UNIT IS NOT ADJACENT TO AN APPROACH SLAB.
-MEASURE GUARDRAIL HEIGHT FROM THE TOP OF ADJACENT SURFACE (SHOULDER, BERM, OR GUTTER).
-LAP JOINTS IN THE DIRECTION OF TRAFFIC FLOW.
-SEE SHEET 3 FOR POST SECTIONS 1 THRU 9.

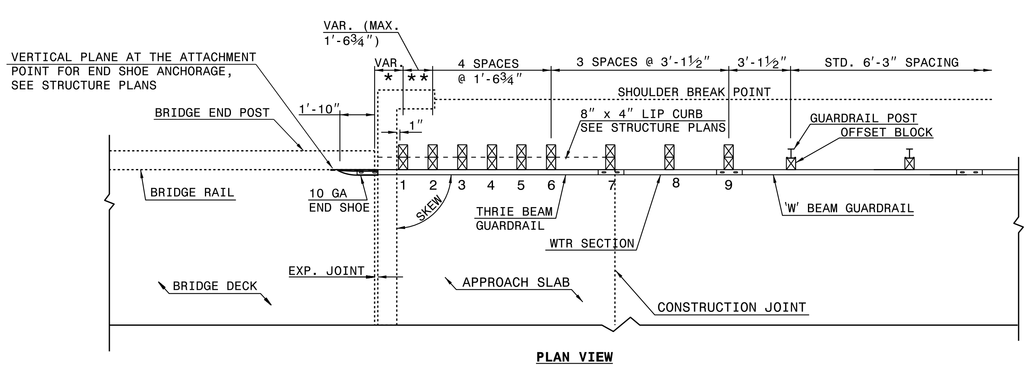

PLAN VIEW

GUARDRAIL ANCHOR UNIT, TYPE III FOR ATTACHMENT TO RAIL ON BRIDGE - SUB REGIONAL TIER

SHEET 2 OF 7
862D03

STATE OF NORTH CAROLINA
DEPT. OF TRANSPORTATION
DIVISION OF HIGHWAYS
RALEIGH, N.C.

ROADWAY DETAIL DRAWING FOR
STRUCTURE ANCHOR UNITS
GUARDRAIL ANCHOR UNIT, TYPE III FOR ATTACHMENT TO
RAIL ON BRIDGE - SUB REGIONAL TIER

SHEET 2 OF 7
862D03

SEE TITLE BLOCK

ORIGINAL BY: J. HOWERTON DATE: 06-22-12
MODIFIED BY: DATE:
CHECKED BY: DATE:
FILE SPEC.:

CONTRACT STANDARDS AND DEVELOPMENT UNIT
Office 919-707-6950 FAX 919-250-4119

DOCUMENT NOT CONSIDERED FINAL UNLESS ALL SIGNATURES COMPLETED

Documents by Joel S. Howerton
EXPIRATION DATE: 31 DEC 2018
NORTH CAROLINA PROFESSIONAL ENGINEER SEAL 022966
Joel S. Howerton, P.E.
3/27/2018

PROJECT REFERENCE NO.
SHEET NO.

DocuSign Envelope ID: F93BE7B9-224D-49AF-90B7-52E041F876E6

6/21/00

COMPUTED BY: REO (WEI)	DATE: 6-15-17
CHECKED BY:	DATE:

PROJECT REFERENCE NO.	SHEET NO.
B-4563	3B-1

STATE OF NORTH CAROLINA
DIVISION OF HIGHWAYS

SUMMARY OF EARTHWORK

STATION	STATION	UNCL. EXCAV.	EMBANK. +%	BORROW	WASTE
-L- 14+50.00	-L- 16+37.77	100	161	61	
-Y- 10+14.69	-Y- 11+10.00	2	206	204	
SUBTOTAL		102	367	265	
-L- 17+50.23	-L- 20+50.00	16	265	249	
-Y1- 10+12.25	-Y1- 11+12.03	16	1		15
-Y1- 11+40.79	-Y1- 12+45.59	3	633	630	
SUBTOTAL		35	899	879	15
PROJECT TOTALS:		137	1266	1144	15
5% TO REPLACE BORROW PIT				56	
WASTE IN LIEU BORROW				-15	-15
GRAND TOTALS:		137	1266	1185	0
SAY:		200		1300	

Approximate quantities only. Unclassified excavation, borrow excavation, shoulder borrow, fine grading, clearing and grubbing, breaking of existing pavement and removal of existing pavement will be paid for at the lump sum price for "Grading".

Earthwork quantities are calculated by the Roadway Design Unit. These earthwork quantities are based in part on subsurface data provided by the Geotechnical Engineering Unit.

SHOULDER BERM GUTTER SUMMARY

SURVEY LINE	STATION	STATION	LENGTH
-L- LT.	16+11.00	16+30.90	19.90'
-L- RT.	16+11.00	16+23.43	12.43'
		TOTAL:	32.33'
		SAY:	40.00'

PAVEMENT REMOVAL SUMMARY

SURVEY LINE	STATION	STATION	LOCATION LT/RT/CL	YD^2
-L-	16+22.59	EX. BRIDGE	CL	60.21
-L-	EX. BRIDGE	17+65.47	CL	50.34
			TOTAL:	110.55
			SAY:	120.00

NOTE: Invert Elevations are for Bid Purposes only and shall not be used for project construction stakeout. See "Standard Specifications For Roads and Structures, Section 300-5".

LIST OF PIPES, ENDWALLS, ETC. (FOR PIPES 48" & UNDER)

| STATION | LOCATION (LT,RT, OR CL) | STRUCTURE NO. FROM | STRUCTURE NO. TO | TOP ELEVATION | INVERT ELEVATION | INVERT ELEVATION | SLOPE CRITICAL | DRAINAGE PIPE (RCP, CSP, CAAP, HDPE, or PVC) SIZE 12" | 15" | 18" | 24" | 30" | 36" | 42" | 48" | C.S. PIPE (UNLESS NOTED OTHRWISE) SIZE 12" | 15" | 18" | 24" | 30" | 36" | 42" | 48" | CLASS IV R.C. PIPE (UNLESS OTHERWISE NOTED) SIZE 12" | 15" | 18" | 24" | 30" | 36" | 42" | 48" | 15" SIDE DRAIN PIPE | 18" SIDE DRAIN PIPE | 24" SIDE DRAIN PIPE | ENDWALLS STD. 838.01, STD. 838.11 OR STD. 838.80 (UNLESS NOTED OTHERWISE) R.C.P. | ENDWALLS STD. 838.01, STD. 838.11 OR STD. 838.80 (UNLESS NOTED OTHERWISE) C.S.P. | QUANTITIES FOR DRAINAGE STRUCTURES * TOTAL L.F. FOR PAY QUANTITY SHALL BE COL. "A" + (1.3 X COL. "B") PER EACH (0' THRU 5.0') | LIN. FT. A 5.0' THRU 10.0' | LIN. FT. B 10.0' AND ABOVE | C.B. STD. 840.01 OR STD. 840.02 | FRAME, GRATES AND HOOD STANDARD 840.03 TYPE OF GRATE E | F | G | D.I. STD. 840.14 OR STD. 840.15 | D.I. FRAME & GRATE STD. 840.16 | G.D.I. TYPE "A" STD. 840.17 OR 840.26 | G.D.I. TYPE "B" STD. 840.18 OR 840.27 | G.D.I. TYPE "D" STD. 840.19 OR 840.28 | G.D.I. FRAME WITH GRATE STD. 840.22 | G.D.I. FRAME WITH TWO GRATES STD. 840.22 | G.D.I. (N.S.) FRAME WITH GRATE STD. 840.24 | G.D.I. (N.S.) FRAME WITH TWO GRATES STD. 840.24 | J.B. STD. 840.31 OR 840.32 | G.D.I. FRAME WITH TWO GRATES STD. 840.20 | G.D.I. (N.S.) FRAME WITH TWO GRATES STD. 840.29 | CORR. STEEL ELBOWS NO. & SIZE | CONC. COLLARS CL. "B" C.Y. STD. 840.72 | CONC. & BRICK PIPE PLUG, C.Y. STD. 840.71 | PIPE REMOVAL LIN.FT. | REMARKS |
|---|---|---|---|---|---

DocuSign Envelope ID: EAA475DF-956B-4B71-AC72-AAC1B1C6F574

8/17/99

-Y-

PI Sta 10+57.50
△ = 91° 48' 09.5" (LT)
D = 381' 58' 18.7"
L = 24.03'
T = 15.48'
R = 15.00'
SE = .02

PI Sta 11+18.28
△ = 78° 32' 48.1" (RT)
D = 381' 58' 18.7"
L = 20.56'
T = 12.27'
R = 15.00'
SE = .02

-Y1-

PI Sta 10+16.92
△ = 34° 35' 41.4" (RT)
D = 381' 58' 18.7"
L = 9.06'
T = 4.67'
R = 15.00'
SE = .02

PI Sta 11+07.11
△ = 83° 03' 42.6" (LT)
D = 381' 58' 18.7"
L = 21.75'
T = 13.29'
R = 15.00'
SE = .02

PI Sta 11+82.41
△ = 90° 00' 00.0" (LT)
D = 381' 58' 18.7"
L = 23.56'
T = 15.00'
R = 15.00'
SE = .02

PI Sta 12+53.87
△ = 90° 00' 00.0" (RT)
D = 381' 58' 18.7"
L = 23.56'
T = 15.00'
R = 15.00'
SE = .02

-L-

PI Sta 14+23.86
△ = 18° 39' 55.9" (LT)
D = 6° 01' 52.1"
L = 309.49'
T = 156.13'
R = 950.00'
SE = EXIST.

PI Sta 20+73.18
△ = 10° 05' 15.6" (LT)
D = 3° 49' 11.0"
L = 264.09'
T = 132.39'
R = 1,500.00'
SE = EXIST.

DETAIL C
RIP RAP AT EMBANKMENT
(Not to Scale)

Type of Liner= 7 TONS,CL II Rip-Rap
Geotextile= 20 sy
FROM STA. 16+90 LT.

WETHERILL ENGINEERING
1223 Jones Franklin Rd.
Raleigh, N.C. 27606
License No. F-0377
Bus: 919 851 8077
Fax: 919 851 8107
TRANSPORTATION PLANNING/DESIGN - BRIDGE/STRUCTURE DESIGN
CIVIL/SITE DESIGN - GIS/GPS - CONSTRUCTION OBSERVATION

PROJECT REFERENCE NO.	SHEET NO.
B-4563	4
R/W SHEET NO.	

ROADWAY DESIGN ENGINEER
4/5/2018
NORTH CAROLINA PROFESSIONAL SEAL 21116 ENGINEER BOB A. MAY
DocuSigned by: Bob A. May
5/10/2018 | 10:09:00 AM PDT

HYDRAULICS ENGINEER
4/5/2018
NORTH CAROLINA PROFESSIONAL SEAL 34349 ENGINEER PAUL A. JORDAN, JR.
DocuSigned by: Paul A. Jordan
5/10/2018 | 8:12:00 AM PDT

DOCUMENT NOT CONSIDERED FINAL UNLESS ALL SIGNATURES COMPLETED

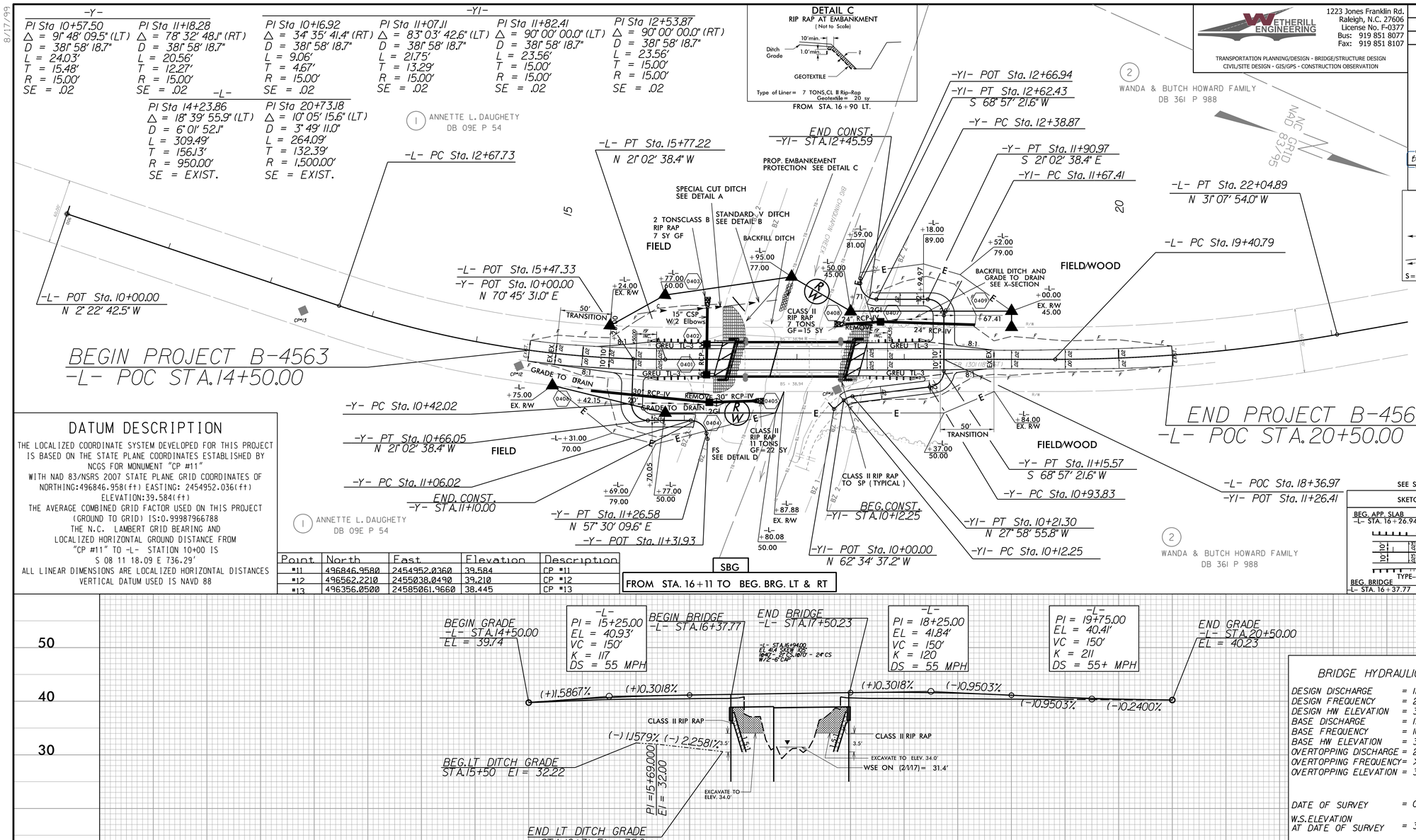

DETAIL D
FALSE SUMP
(Not to Scale)

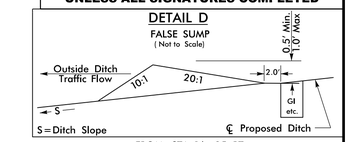

FROM STA. 16+25 RT

DETAIL A
SPECIAL CUT DITCH
(Not to Scale)

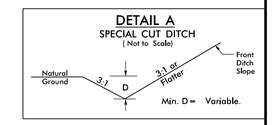

FROM STA.15+50 TO STA.16+31 LT

DETAIL B
STANDARD 'V' DITCH
(Not to Scale)

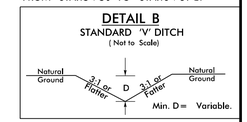

FROM STA.16+31 TO STA.16+80 LT

SEE SHTS. S-1 THRU S-19 FOR STRUCTURE PLANS.

DATUM DESCRIPTION

THE LOCALIZED COORDINATE SYSTEM DEVELOPED FOR THIS PROJECT IS BASED ON THE STATE PLANE COORDINATES ESTABLISHED BY NCGS FOR MONUMENT "CP #11"
WITH NAD 83/NSRS 2007 STATE PLANE GRID COORDINATES OF NORTHING:496846.958(ft) EASTING: 2454952.036(ft)
ELEVATION:39.584(ft)
THE AVERAGE COMBINED GRID FACTOR USED ON THIS PROJECT (GROUND TO GRID) IS:0.99987966788
THE N.C. LAMBERT GRID BEARING AND LOCALIZED HORIZONTAL GROUND DISTANCE FROM "CP #11" TO -L- STATION 10+00 IS
S 08 11 18.09 E 736.29'
ALL LINEAR DIMENSIONS ARE LOCALIZED HORIZONTAL DISTANCES
VERTICAL DATUM USED IS NAVD 88

Point	North	East	Elevation	Description
#11	496846.9580	2454952.0360	39.584	CP #11
#12	496562.2210	2455038.0490	39.210	CP #12
#13	496356.0500	2458506 1.9660	38.445	CP #13

SBG

FROM STA. 16+11 TO BEG. BRG. LT & RT

SKETCH SHOWING BRIDGE /PAVEMENT RELATIONSHIP

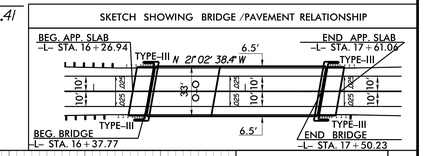

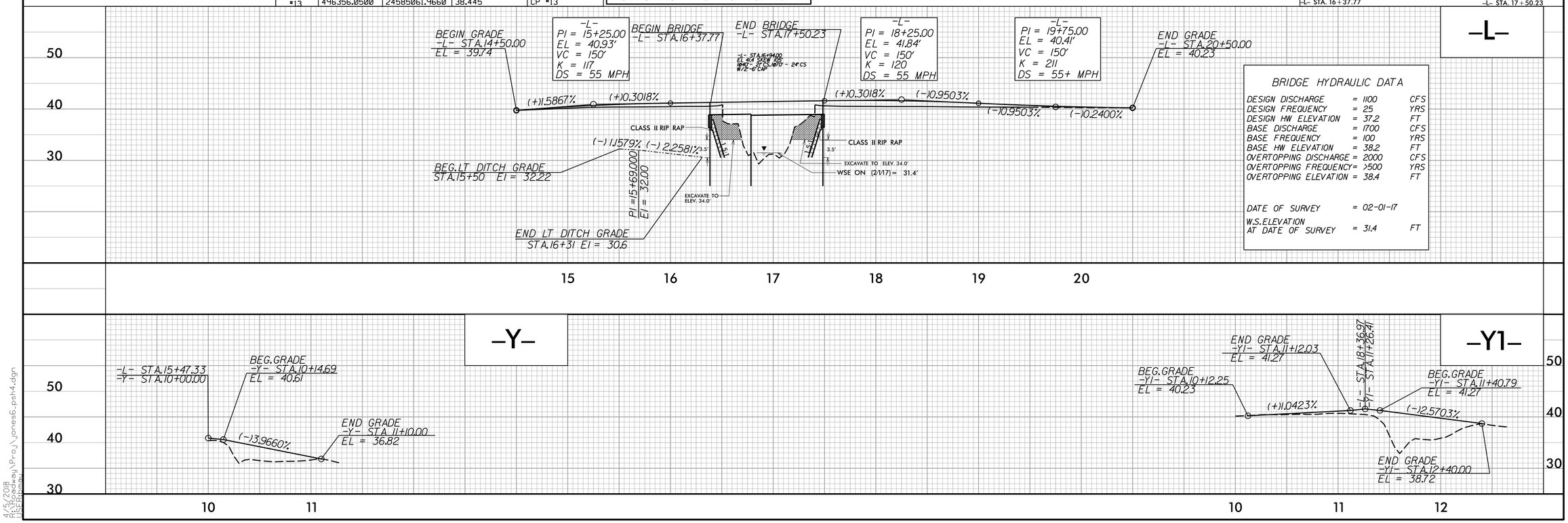

BRIDGE HYDRAULIC DATA

DESIGN DISCHARGE	= 1100	CFS
DESIGN FREQUENCY	= 25	YRS
DESIGN HW ELEVATION	= 37.2	FT
BASE DISCHARGE	= 1700	CFS
BASE FREQUENCY	= 100	YRS
BASE HW ELEVATION	= 38.2	FT
OVERTOPPING DISCHARGE	= 2000	CFS
OVERTOPPING FREQUENCY	= >500	YRS
OVERTOPPING ELEVATION	= 38.4	FT
DATE OF SURVEY	= 02-01-17	
W.S. ELEVATION AT DATE OF SURVEY	= 31.4	FT

4/5/2018
R:\Roadway\Proj\jones6_psh4.dgn
bsfriddy

DocuSign Envelope ID: FBC80115-8498-4E2F-AB6A-641780EA76E2

STATE OF NORTH CAROLINA
DIVISION OF HIGHWAYS

TRANSPORTATION MANAGEMENT PLAN

JONES COUNTY

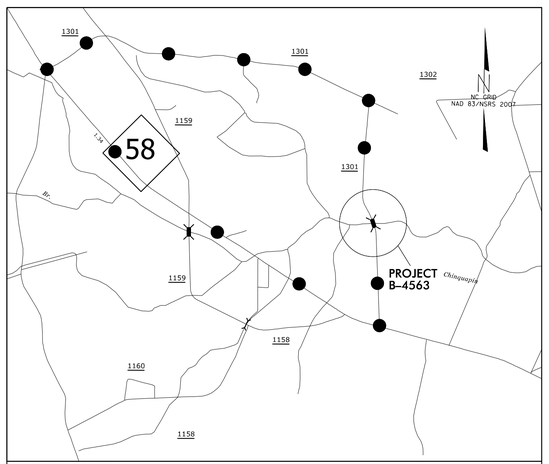

(NOT TO SCALE) VICINITY MAP

OFFSITE DETOUR

LOCATION: BRIDGE #6 OVER BIG CHINQUAPIN CREEK ON SR 1301

TYPE OF WORK: BRIDGE REPLACEMENT, GUARDRAIL, PAVING, GRADING AND DRAINAGE

INDEX OF SHEETS

SHEET NO.	TITLE
TMP-01	TITLE SHEET, VICINITY MAP, AND INDEX OF SHEETS
TMP-01A	LIST OF APPLICABLE ROADWAY STANDARD DRAWINGS, LEGEND, GENERAL NOTES, AND PHASING
TMP-02	OFF-SITE DETOUR
TMP-03	SPECIAL SIGN DESIGNS

SHEET NO.
TMP-01

B-4563

TIP PROJECT:

DOCUMENT NOT CONSIDERED FINAL UNLESS ALL SIGNATURES COMPLETED

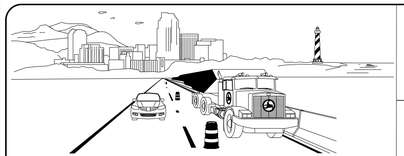

WORK ZONE SAFETY & MOBILITY
"from the MOUNTAINS to the COAST"

PLANS PREPARED BY:

WETHERILL ENGINEERING
1223 Jones Franklin Rd.
Raleigh, N.C. 27606
Liscense No. F-0377
Bus: 919 851 8077
Fax: 919 851 8107

TRANSPORTATION PLANNING/DESIGN - BRIDGE/STRUCTURE DESIGN
CIVIL/SITE DESIGN - GIS/GPS - CONSTRUCTION OBSERVATION

NCDOT CONTACTS:

J. S. KITE, P.E.
PROJECT ENGINEER

MATT SPRINGER, P.E.
PROJECT DESIGN ENGINEER

DIVISION OF HIGHWAYS
STATE OF NORTH CAROLINA
DEPARTMENT OF TRANSPORTATION
WORK ZONE TRAFFIC CONTROL

APPROVED: DocuSigned by: Bob A. May 513C8442442940...

DATE: 10/19/2017

SEAL

NORTH CAROLINA PROFESSIONAL SEAL 21116 ENGINEER BOB A. MAY

10/19/2017
P:\2017\17147.01_B-4563\Traffic\WZTC\TMP\2017_17147.01_B-4563_Traffic_WZTC_TMP_01_Title.dgn
User:AHayes

DocuSign Envelope ID: FBC80115-8498-4E2F-AB6A-641780EA76E2

PROJ. REFERENCE NO.	SHEET NO.
B-4563	TMP-01A

ROADWAY STANDARD DRAWINGS

THE FOLLOWING ROADWAY STANDARDS AS SHOWN IN "ROADWAY STANDARD DRAWINGS" - N.C. DEPARTMENT OF TRANSPORTATION - RALEIGH, N.C., DATED JANUARY 2018 ARE APPLICABLE TO THIS PROJECT AND BY REFERENCE HEREBY ARE CONSIDERED A PART OF THESE PLANS:

STD. NO.	TITLE
1101.03	TEMPORARY ROAD CLOSURES
1110.01	STATIONARY WORK ZONE SIGNS
1145.01	BARRICADES

LEGEND

GENERAL

NORTH ARROW

TRAFFIC CONTROL DEVICES

BARRICADE (TYPE III)

TEMPORARY SIGNING

STATIONARY SIGN

GENERAL NOTES

CHANGES MAY BE REQUIRED WHEN PHYSICAL DIMENSIONS IN THE DETAIL DRAWINGS, STANDARD DETAILS, AND ROADWAY DETAILS ARE NOT ATTAINABLE TO MEET FIELD CONDITIONS OR RESULT IN DUPLICATE OR UNDESIRED OVERLAPPING OF DEVICES. MODIFICATION MAY INCLUDE: MOVING, SUPPLEMENTING, COVERING, OR REMOVAL OF DEVICES AS DIRECTED BY THE ENGINEER.

THE FOLLOWING GENERAL NOTES APPLY AT ALL TIMES FOR THE DURATION OF THE CONSTRUCTION PROJECT EXCEPT WHEN OTHERWISE NOTED IN THE PLAN OR DIRECTED BY THE ENGINEER.

TRAFFIC PATTERN ALTERATIONS

A) NOTIFY THE ENGINEER THIRTY (30) CALENDAR DAYS PRIOR TO ANY TRAFFIC PATTERN ALTERATION.

SIGNING

B) PROVIDE SIGNING AND DEVICES REQUIRED TO CLOSE THE ROAD ACCORDING TO THE ROADWAY STANDARD DRAWINGS AND TRAFFIC CONTROL PLANS.

PROVIDE SIGNING REQUIRED FOR THE OFF-SITE DETOUR ROUTE AS SHOWN IN THE TRAFFIC CONTROL PLANS.

C) COVER OR REMOVE ALL SIGNS AND DEVICES REQUIRED TO CLOSE THE ROAD WHEN ROAD CLOSURE IS NOT IN OPERATION.

COVER OR REMOVE ALL SIGNS REQUIRED FOR THE OFF-SITE DETOUR WHEN THE DETOUR IS NOT IN OPERATION.

D) ENSURE ALL NECESSARY SIGNING IS IN PLACE PRIOR TO ALTERING ANY TRAFFIC PATTERN.

TRAFFIC CONTROL DEVICES

E) PLACE TYPE III BARRICADES, WITH "ROAD CLOSED" SIGN R11-2 ATTACHED, OF SUFFICIENT LENGTH TO CLOSE ENTIRE ROADWAY.

PHASING

STEP 1) INSTALL ALL ROAD CLOSURE SIGNING AND OFF-SITE DETOUR SIGNING. IF CONSTRUCTION DOES NOT BEGIN WITHIN 3 DAYS OF SIGN INSTALLATION, COVER OR REMOVE AT THE DISCRETION OF THE ENGINEER (SEE SHEET TMP-02).

STEP 2) INSTALL TYPE III BARRICADES AND CLOSE -L- (SR 1301 PINE STREET). DETOUR TRAFFIC OFF-SITE. CONSTRUCT ALL -Y- LINES AND TIE TO EXISTING ELEVATION OF -L- (SEE TMP-02).

ADJUST THE TYPE III BARRICADES "J" TO STA. 15+60 +/- AND STA. 18+20 +/-. AWAY FROM TRAFFIC, CONSTRUCT -L- INCLUDING STRUCTURE UP TO AND INCLUDING THE FINAL LIFT OF SURFACE COURSE, FINAL PAVEMENT MARKINGS AND MARKERS ON -L- (SEE FINAL PAVEMENT MARKING PLANS). MATCH ALL -Y- LINE ELEVATIONS TO -L- ELEVATION AT ALL TIMES.

STEP 3) REMOVE TYPE THREE BARRICADES, OPEN -L- TO TRAFFIC, AND REMOVE ALL REMAINING SIGNS AND DEVICES.

ETHERILL ENGINEERING
1223 Jones Franklin Rd.
Raleigh, N.C. 27606
License No. F-0377
Bus: 919 851 8077
Fax: 919 851 8107
TRANSPORTATION PLANNING/DESIGN • BRIDGE/STRUCTURE DESIGN
CIVIL/SITE DESIGN • GIS/GPS • CONSTRUCTION OBSERVATION

APPROVED DocuSigned by: Bob A. May 3130844242429403...
DATE: 10/19/2017

NORTH CAROLINA PROFESSIONAL SEAL 21116 ENGINEER BOB A. MAY

DOCUMENT NOT CONSIDERED FINAL UNLESS ALL SIGNATURES COMPLETED

DIVISION OF HIGHWAYS • STATE OF NORTH CAROLINA • DEPARTMENT OF TRANSPORTATION • WORK ZONE TRAFFIC CONTROL

ROADWAY STANDARD DRAWINGS, LEGEND, GENERAL NOTES, & PHASING

10/19/2017
P:\2017\17147.01_B-4563\Traffic\WZTC\TMP\2017_17147.01_B-4563_Traffic_WZTC_TMP_01A_LEGEND.dgn
User:AHayes

DocuSign Envelope ID: FBC80115-8498-4E2F-AB6A-641780EA76E2

PROJ. REFERENCE NO.	SHEET NO.
B-4563	TMP-02

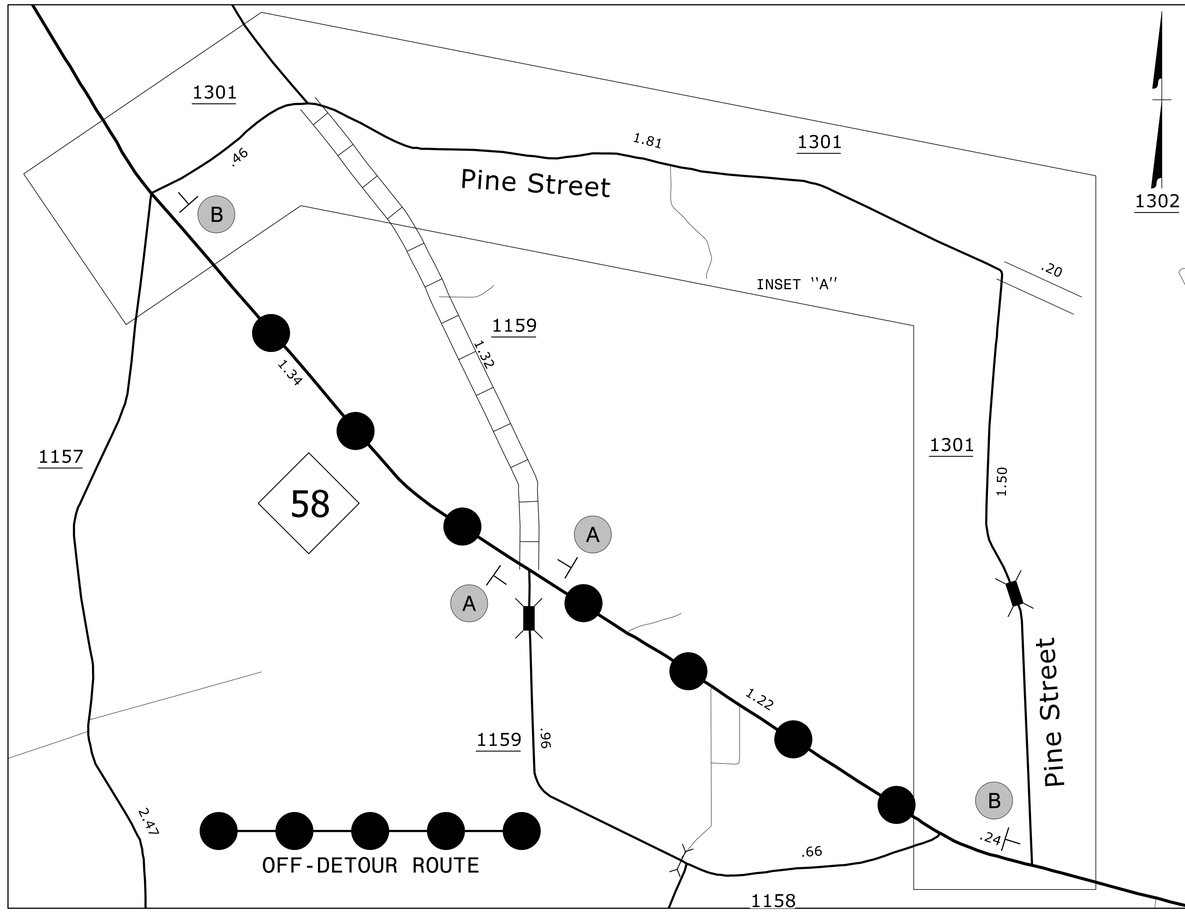

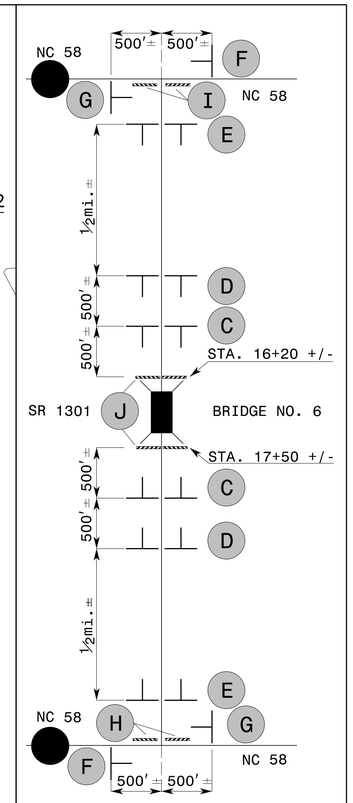

INSET "A"

REFER TO ROADWAY STANDARD DRAWING 1101.03, SHEET 1 OF 9 FOR APPLICABLE NOTES.

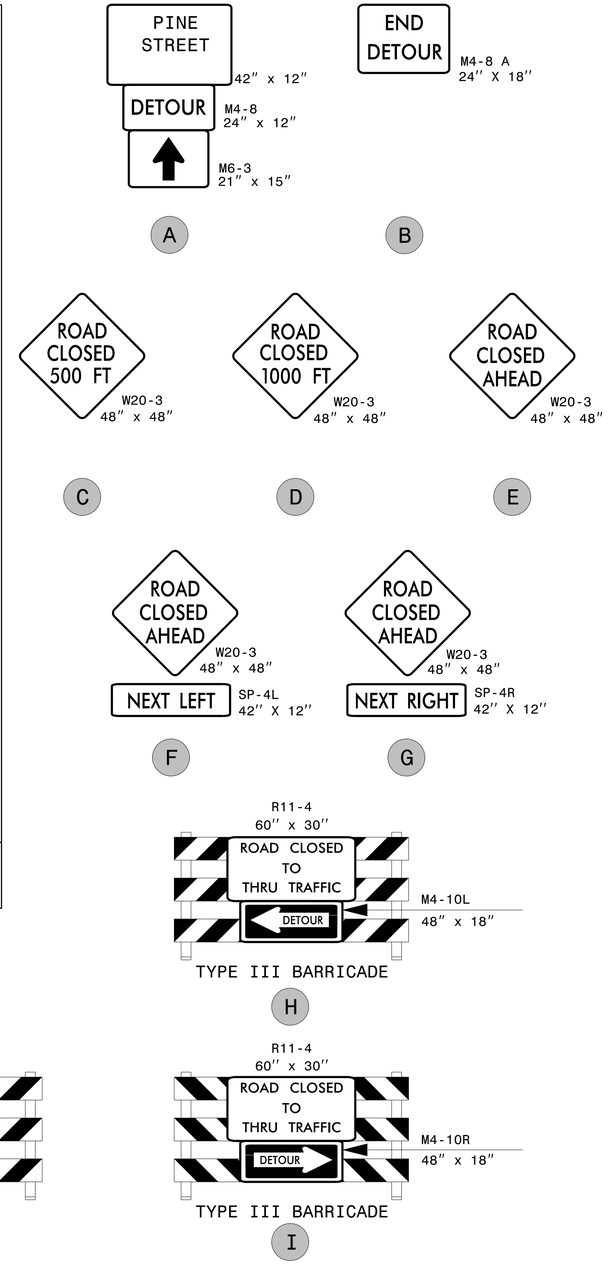

ETHERILL ENGINEERING
1223 Jones Franklin Rd.
Raleigh, N.C. 27606
License No. F-0377
Bus: 919 851 8077
Fax: 919 851 8107
TRANSPORTATION PLANNING/DESIGN - BRIDGE/STRUCTURE DESIGN
CIVIL/SITE DESIGN - GIS/GPS - CONSTRUCTION OBSERVATION

APPROVED: DocuSigned by: Bob A. May 5130B4424429402...

DATE: 10/19/2017

NORTH CAROLINA PROFESSIONAL SEAL 21116 ENGINEER BOB A. MAY

DOCUMENT NOT CONSIDERED FINAL UNLESS ALL SIGNATURES COMPLETED

DIVISION OF HIGHWAYS · STATE OF NORTH CAROLINA · DEPARTMENT OF TRANSPORTATION · WORK ZONE TRAFFIC CONTROL

OFF-SITE DETOUR

10/19/2017
P:\2017\17147.01_B-4563\Traffic\WZTC\TMP\2017_17147.01_B-4563_Traffic_WZTC_TMP_02_OSD.dgn
User:AHayes

DocuSign Envelope ID: FBC80115-8498-4E2F-AB6A-641780EA76E2

PROJ. REFERENCE NO.	SHEET NO.
B-4563	TMP-03

SIGN NUMBER: name
TYPE: STATIONARY
QUANTITY: SEE PLANS

SIGN WIDTH: 3′-6″
HEIGHT: 1′-0″
TOTAL AREA: 3.5 Sq.Ft.

BORDER TYPE: INSET
RECESS: 0.38″
WIDTH: 0.44″
RADII: 1.5″

NO. Z BARS:
LENGTH:

BACKG COLOR: Fluorescent Orange
COPY COLOR: Black

SYMBOL	X	Y	WID	HT

MAT′L: 0.080″ (2.0 mm) ALUMINUM

DESIGN BY: DAH
PROJECT ID: B-4563
CHECKED BY: DAH
DIV: 2
DATE: Oct 12, 2017

USE NOTES: 1,2

1. Legend and border shall be direct applied black non-reflective sheeting.
2. Background shall be NC GRADE B fluoresent orange retroreflective sheeting.

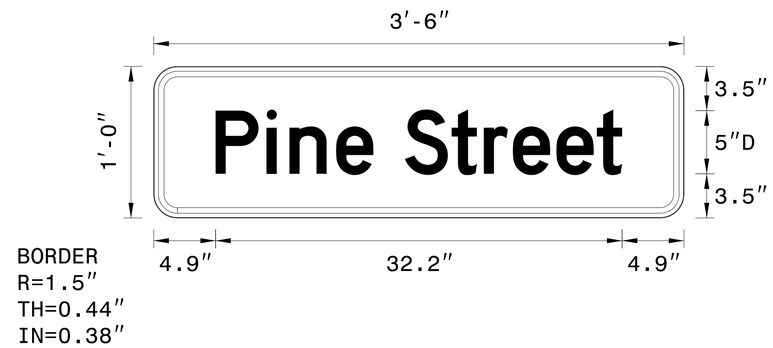

Spacing Factor is 1 unless specified otherwise

LETTER POSITIONS

Letter locations are panel edge to lower left corner

	P	i	n	e		S	t	r	e	e	t	Series/Size Text Length
	4.9	9	10.8	14.5	17.4	19.9	23.6	26.2	28.5	31.9	35.1	D 2000 / 32.2

FILENAME: 2017_17147.01_B-4563_Traffic_WZTC_TMP_BSD

NORTH CAROLINA D.O.T. SIGN DETAIL

ETHERILL ENGINEERING
1223 Jones Franklin Rd.
Raleigh, N.C. 27606
License No. F-0377
Bus: 919 851 8077
Fax: 919 851 8107
TRANSPORTATION PLANNING/DESIGN - BRIDGE/STRUCTURE DESIGN
CIVIL/SITE DESIGN - GIS/GPS - CONSTRUCTION OBSERVATION

APPROVED: DocuSigned by: Bob A. May 5130844244294933...
DATE: 10/19/2017

NORTH CAROLINA PROFESSIONAL SEAL 21116 ENGINEER BOB A. MAY

DOCUMENT NOT CONSIDERED FINAL UNLESS ALL SIGNATURES COMPLETED

DIVISION OF HIGHWAYS · STATE OF NORTH CAROLINA · DEPARTMENT OF TRANSPORTATION · WORK ZONE TRAFFIC CONTROL

SPECIAL SIGN DESIGN

10/19/2017
P:\2017\17147.01_B-4563\Traffic\WZTC\TMP\2017_17147.01_B-4563_Traffic_WZTC_TMP_03_SD.dgn
User:AHayes

DocuSign Envelope ID: FBC80115-8498-4E2F-AB6A-641780EA76E2

T.I.P.: B-4563

CONTRACT: DB00397

TIP NO.	SHEET NO.
B-4563	PMP-01

APPROVED: Bob A. May (DocuSigned by: 5130842442929493)

DATE: 10/19/2017

SEAL

NORTH CAROLINA PROFESSIONAL SEAL 21116 ENGINEER BOB A. MAY

DOCUMENT NOT CONSIDERED FINAL UNLESS ALL SIGNATURES COMPLETED

STATE OF NORTH CAROLINA
DEPARTMENT OF TRANSPORTATION

PAVEMENT MARKING PLAN
JONES COUNTY

INDEX

SHEET NO.	DESCRIPTION
PMP-01	PAVEMENT MARKING PLAN TITLE AND SCHEDULE SHEET
PMP-02	PAVEMENT MARKING DETAIL

ROADWAY STANDARD DRAWING

THE FOLLOWING ROADWAY STANDARDS AS APPEAR IN "ROADWAY STANDARD DRAWINGS" - PROJECT SERVICES UNIT - N.C. DEPARTMENT OF TRANSPORTATION - RALEIGH, N.C., DATED JANUARY 2018 ARE APPLICABLE TO THIS PROJECT AND BY REFERENCE HEREBY ARE CONSIDERED A PART OF THESE PLANS:

STD. NO.	TITLE
1205.01	PAVEMENT MARKINGS - LINE TYPES AND OFFSETS
1205.02	PAVEMENT MARKINGS - TWO-LANE AND MULTILANE ROADWAYS
1205.12	PAVEMENT MARKINGS - BRIDGES
1250.01	RAISED PAVEMENT MARKERS - INSTALLATION SPACING
1251.01	RAISED PAVEMENT MARKERS - PERMANENT AND TEMPORARY
1261.01	GUARDRAIL AND BARRIER DELINEATORS - INSTALLATION SPACING
1261.02	GUARDRAIL AND BARRIER DELINEATORS - TYPES AND MOUNTING
1262.01	GUARDRAIL END DELINEATION

GENERAL NOTES

THE FOLLOWING GENERAL NOTES APPLY AT ALL TIMES FOR THE DURATION OF THE CONSTRUCTION PROJECT, EXCEPT WHEN OTHERWISE NOTED IN THE PLAN, OR DIRECTED BY THE ENGINEER.

A) INSTALL PAVEMENT MARKINGS AND PAVEMENT MARKERS ON THE FINAL SURFACE AS FOLLOWS:

ROAD NAME	MARKING	MARKER
1. -L- (PINE STREET)	PAINT	RAISED

B) PLACE TWO APPLICATIONS OF PAINT PAVEMENT MARKINGS ON THE FINAL WEARING SURFACE. PLACE THE SECOND APPLICATION OF PAINT UPON SUFFICIENT DRYING TIME OF THE FIRST.

C) TIE PROPOSED PAVEMENT MARKING LINES TO EXISTING PAVEMENT MARKING LINES.

D) REMOVE/REPLACE ANY CONFLICTING/DAMAGED PAVEMENT MARKINGS AND MARKERS.

FINAL PAVEMENT MARKING SCHEDULE

SYMB	DESCRIPTION
	PAVEMENT MARKINGS
	PAINT(4")
PA	WHITE EDGELINE
PI	YELLOW DOUBLE CENTER
	PERMANENT RAISED PAVEMENT MARKERS
MA	YELLOW & YELLOW

PLAN SUBMITTED TO:

Ayman Alqudwah, P.E., Signing & Delineation Regional Engineer

STATE OF NORTH CAROLINA DEPARTMENT OF TRANSPORTATION

PLAN PREPARED BY: firms name here

your name title here

your name title here

ETHERILL ENGINEERING
1223 Jones Franklin Rd.
Raleigh, N.C. 27606
License No. F-0377
Bus: 919 851 8077
Fax: 919 851 8107
TRANSPORTATION PLANNING/DESIGN - BRIDGE/STRUCTURE DESIGN
CIVIL/SITE DESIGN - GIS/GPS - CONSTRUCTION OBSERVATION

10/19/2017
R:\Traffic\WZTC\TMP\2017_17147_01_B-4563_Traffic_WZTC_PMP_01.dgn
User:Ahayes

DocuSign Envelope ID: FBC80115-8498-4E2F-AB6A-641780EA76E2

TIP NO.	SHEET NO.
B-4563	PMP-02

APPROVED: DocuSigned by: Bob A. May
-5305642442949...
DATE: 10/19/2017

SEAL

NORTH CAROLINA PROFESSIONAL SEAL 21116 ENGINEER BOB A. MAY

DOCUMENT NOT CONSIDERED FINAL UNLESS ALL SIGNATURES COMPLETED

NC NAD 83/95 GRID

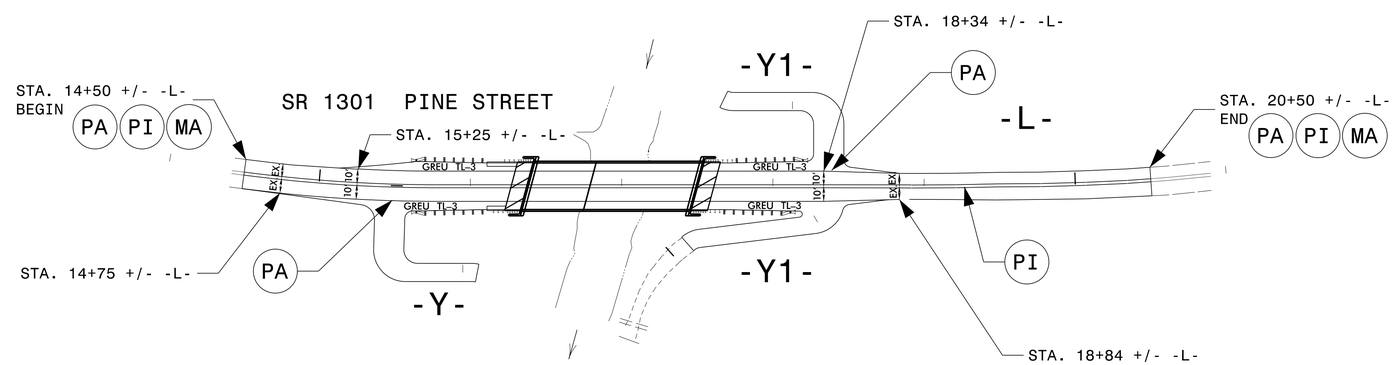

WETHERILL ENGINEERING
1223 Jones Frankiln Rd.
Raleigh, N.C. 27606
License No. F-0377
Bus: 919 851 8077
Fax: 919 851 8107
TRANSPORTATION PLANNING/DESIGN - BRIDGE/STRUCTURE DESIGN
CIVIL/SITE DESIGN - GIS/GPS - CONSTRUCTION OBSERVATION

PAVEMENT MARKING DETAIL

10/19/2017
P:\2017\17147.01_B-4563\Traffic\WZTC\TMP\2017_17147.01_B-4563_Traffic_WZTC_PMP_02.dgn
User:AHoyes

TIP PROJECT: B-4563

STATE	STATE PROJECT REFERENCE NO.	SHEET NO.	TOTAL SHEETS
N.C.	B-4563	EC-1	

STATE PROJ. NO.	F. A. PROJ. NO.	DESCRIPTION

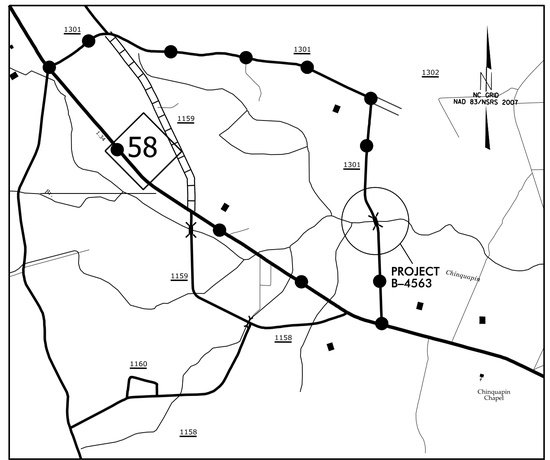

(NOT TO SCALE) VICINITY MAP

OFFSITE DETOUR

STATE OF NORTH CAROLINA
DIVISION OF HIGHWAYS

PLAN FOR PROPOSED
HIGHWAY EROSION CONTROL

JONES COUNTY

LOCATION: BRIDGE #6 OVER BIG CHINQUAPIN CREEK ON SR 1301

TYPE OF WORK: BRIDGE REPLACEMENT, GUARDRAIL, PAVING, GRADING AND DRAINAGE

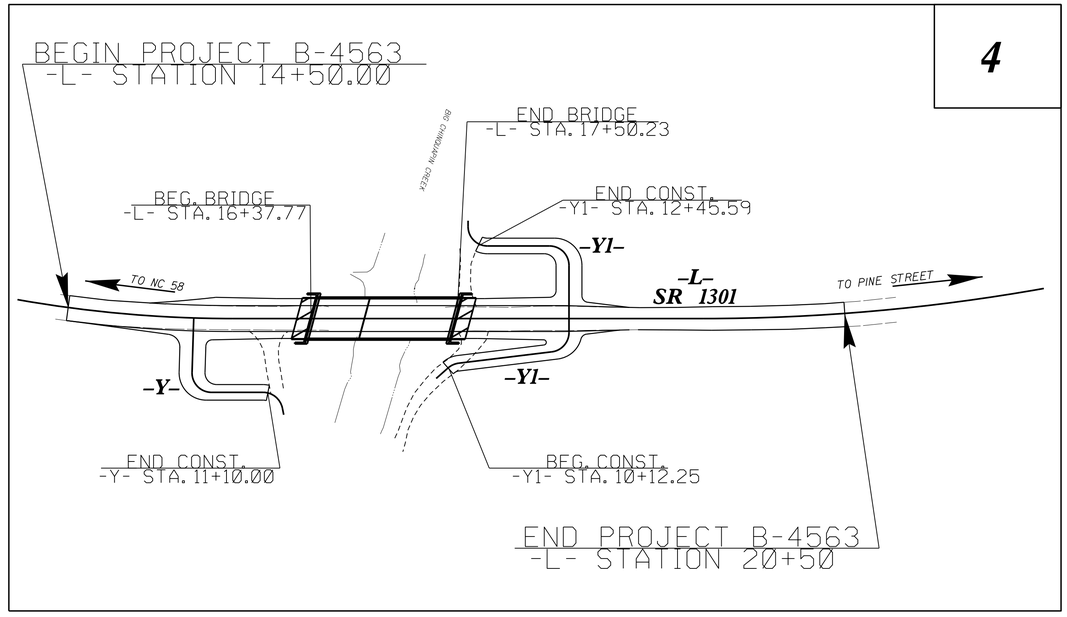

EROSION AND SEDIMENT CONTROL MEASURES

Std. #	Description	Symbol
1630.03	Temporary Silt Ditch	TSD
1630.05	Temporary Diversion	TD
1605.01	Temporary Silt Fence	
1606.01	Special Sediment Control Fence	
1622.01	Temporary Berms and Slope Drains	
1630.02	Silt Basin Type B	
1633.01	Temporary Rock Silt Check Type-A	
	Temporary Rock Silt Check Type-A with Matting and Polyacrylamide (PAM)	
1633.02	Temporary Rock Silt Check Type-B	
	Wattle / Coir Fiber Wattle	SW CFW
	Wattle / Coir Fiber Wattle with Polyacrylamide (PAM)	
1634.01	Temporary Rock Sediment Dam Type-A	
1634.02	Temporary Rock Sediment Dam Type-B	
1635.01	Rock Pipe Inlet Sediment Trap Type-A	
1635.02	Rock Pipe Inlet Sediment Trap Type-B	
1630.04	Stilling Basin	
1630.06	Special Stilling Basin	
	Rock Inlet Sediment Trap:	
1632.01	Type A	A
1632.02	Type B	B
1632.03	Type C	C
	Skimmer Basin	
	Tiered Skimmer Basin	
	Infiltration Basin	

THIS PROJECT CONTAINS EROSION CONTROL PLANS FOR CLEARING AND GRUBBING PHASE OF CONSTRUCTION.

THIS PROJECT HAS BEEN DESIGNED TO SENSITIVE WATERSHED STANDARDS.

ENVIRONMENTALLY SENSITIVE AREA(S) EXIST ON THIS PROJECT

Refer To E. C. Special Provisions for Special Considerations.

GRAPHIC SCALE

0
PLANS

0
PROFILE (HORIZONTAL)

0
PROFILE (VERTICAL)

THESE EROSION AND SEDIMENT CONTROL PLANS COMPLY WITH THE REGULATIONS SET FORTH BY THE NCG-010000 GENERAL CONSTRUCTION PERMIT EFFECTIVE AUGUST 3, 2011 AND ISSUED BY THE NORTH CAROLINA DEPARTMENT OF ENVIRONMENT AND NATURAL RESOURCES DIVISION OF WATER RESOURCES.

Prepared In the Office of:

WETHERILL ENGINEERING

1223 JONES FRANKLIN RD.
RALEIGH, NC 27606

Designed by:

Andrew Hollen — ***3490***

NAME — *LEVEL III CERTIFICATION NO.*

Reviewed In the Office of:

ROADSIDE ENVIRONMENTAL UNIT

1 South Wilmington St.
Raleigh, NC 27611

2012 STANDARD SPECIFICATIONS

Reviewed by:

XXXX XXXX

Roadway Standard Drawings

The following roadway english standards as appear in "Roadway Standard Drawings"– Roadway Design Unit – N. C. Department of Transportation – Raleigh, N. C., dated January 2012 and the latest revison thereto are applicable to this project and by reference hereby are considered a part of these plans.

1604.01	Railroad Erosion Control Detail	1632.01	Rock Inlet Sediment Trap Type A
1605.01	Temporary Silt Fence	1632.02	Rock Inlet Sediment Trap Type B
1606.01	Special Sediment Control Fence	1632.03	Rock Inlet Sediment Trap Type C
1607.01	Gravel Construction Entrance	1633.01	Temporary Rock Silt Check Type A
1622.01	Temporary Berms and Slope Drains	1633.02	Temporary Rock Silt Check Type B
1630.01	Riser Basin	1634.01	Temporary Rock Sediment Dam Type A
1630.02	Silt Basin Type B	1634.02	Temporary Rock Sediment Dam Type B
1630.03	Temporary Silt Ditch	1635.01	Rock Pipe Inlet Sediment Trap Type A
1630.04	Stilling Basin	1635.02	Rock Pipe Inlet Sediment Trap Type B
1630.05	Temporary Diversion	1640.01	Coir Fiber Baffle
1630.06	Special Stilling Basin	1645.01	Temporary Stream Crossing
1631.01	Matting Installation		

$$$$$$$SYSTIME$$$$$$$
$$$$$$$USERNAME$$$$$$$
$$$$$$$DGNFILENAME$$$$$$$

PROJECT REFERENCE NO.	SHEET NO.
B-4563	EC-2
R/W SHEET NO.	
ROADWAY DESIGN ENGINEER	HYDRAULICS ENGINEER

TEMPORARY ROCK SILT CHECK TYPE 'A' WITH EXCELSIOR MATTING AND POLYACRYLAMIDE (PAM)

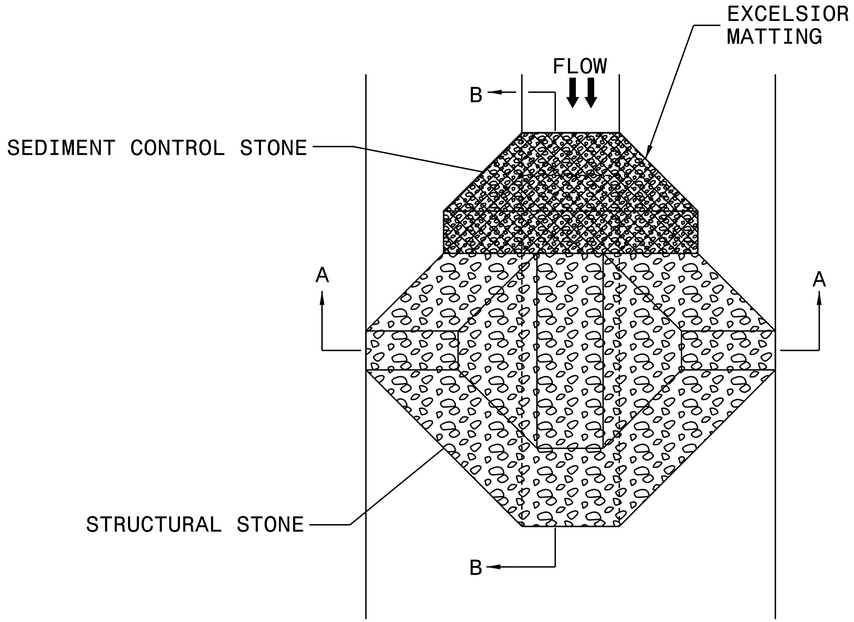

PLAN

NOTES:

INSTALL TEMPORARY ROCK SILT CHECK TYPE A IN ACCORDANCE WITH ROADWAY STANDARD DRAWING NO. 1633.01.

USE EXCELSIOR FOR MATTING MATERIAL AND ANCHOR MATTING SECTION AT TOP AND BOTTOM WITH CLASS B STONE.

PRIOR TO POLYACRYLAMIDE (PAM) APPLICATION, OBTAIN A SOIL SAMPLE FROM PROJECT LOCATION, AND FROM OFFSITE MATERIAL, AND ANALYZE FOR APPROPRIATE PAM FLOCCULANT TO BE APPLIED TO EACH ROCK SILT CHECK.

INITIALLY APPLY 4 OUNCES OF POLYACRYLAMIDE (PAM) TO TOP OF MATTING SECTION AND AFTER EVERY RAINFALL EVENT THAT EQUALS OR EXCEEDS 0.50 INCHES.

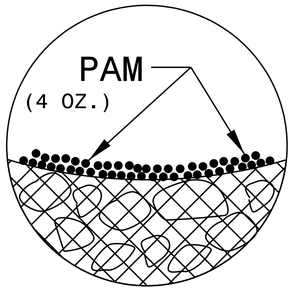

INSET A

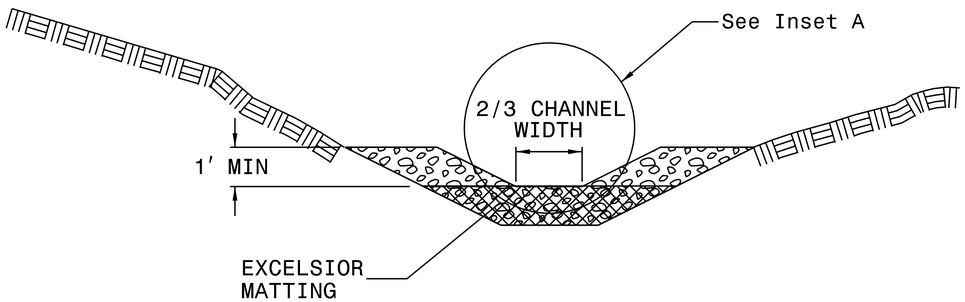

SECTION A-A

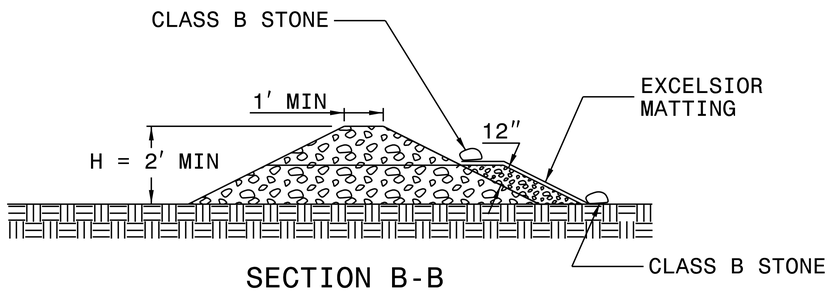

SECTION B-B

NOT TO SCALE

PROJECT REFERENCE NO.	SHEET NO.
B-4563	EC-2A
R/W SHEET NO.	
ROADWAY DESIGN ENGINEER	HYDRAULICS ENGINEER

SILT FENCE COIR FIBER WATTLE BREAK DETAIL

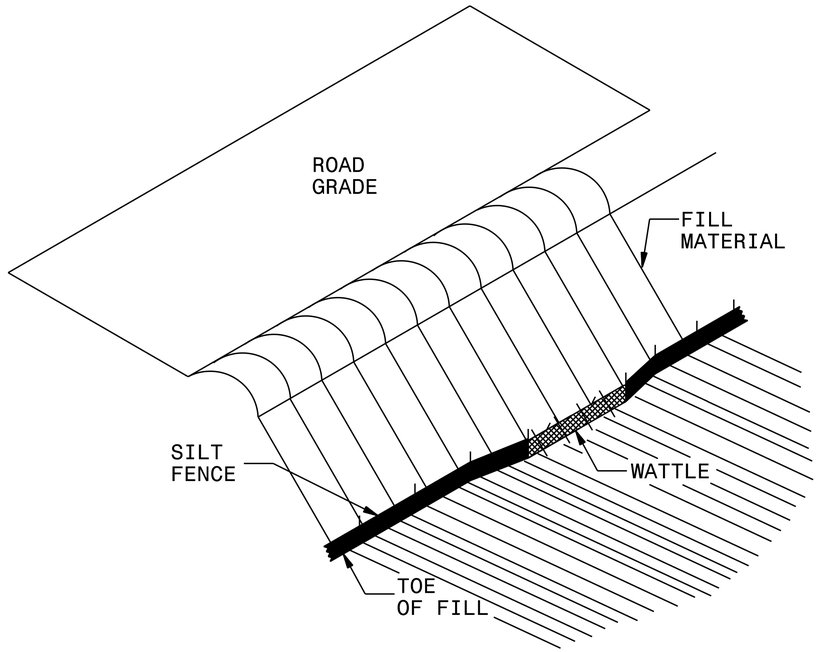

ISOMETRIC VIEW

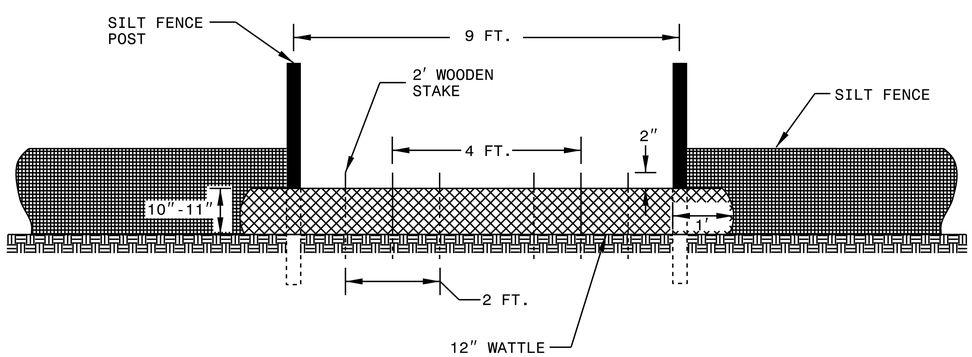

VIEW FROM SLOPE

NOTES:

USE MINIMUM 12 IN. DIAMETER COIR FIBER (COCONUT FIBER) WATTLE AND LENGTH OF 10 FT.

EXCAVATE A 1 TO 2 INCH TRENCH FOR WATTLE TO BE PLACED.

DO NOT PLACE WATTLE ON TOE OF SLOPE.

USE 2 FT. WOODEN STAKES WITH A 2 IN. BY 2 IN. NOMINAL CROSS SECTION.

INSTALL A MINIMUM OF 2 UPSLOPE STAKES AND 4 DOWNSLOPE STAKES AT AN ANGLE TO WEDGE WATTLE TO GROUND.

PROVIDE STAPLES MADE OF 0.125 IN. DIAMETER STEEL WIRE FORMED INTO A U SHAPE NOT LESS THAN 12" IN LENGTH.

INSTALL STAPLES APPROXIMATELY EVERY 1 LINEAR FOOT ON BOTH SIDES OF WATTLE AND AT EACH END TO SECURE IT TO THE SOIL.

WATTLE INSTALLATION CAN BE ON OUTSIDE OF THE SILT FENCE AS DIRECTED.

INSTALL TEMPORARY SILT FENCE IN ACCORDANCE WITH SECTION 1605 OF THE STANDARD SPECIFICATIONS.

INSET A

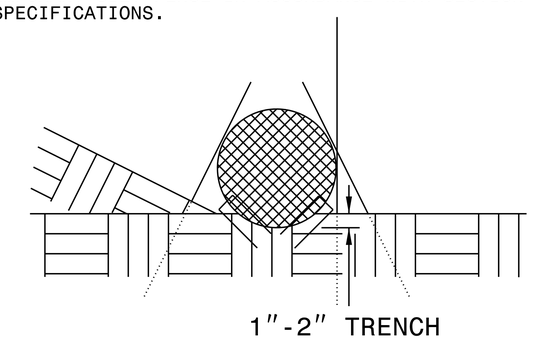

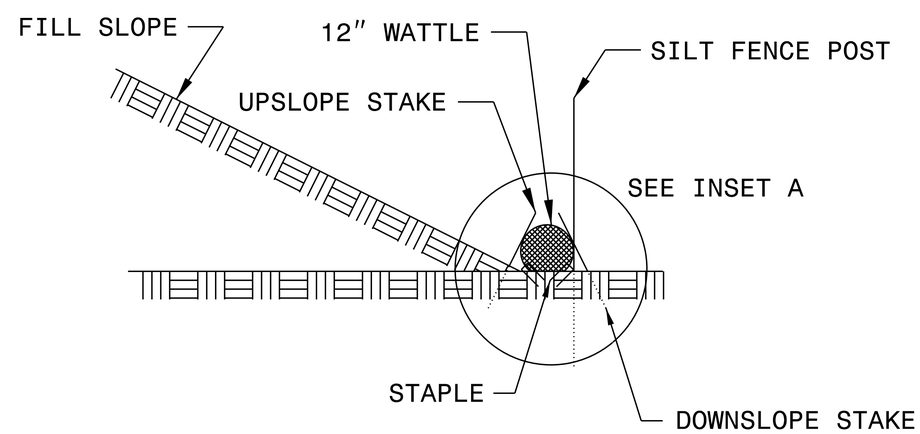

SIDE VIEW

PROJECT REFERENCE NO.	SHEET NO.
B-4563	EC-3
ROADWAY DESIGN ENGINEER	HYDRAULICS ENGINEER

DIVISION OF HIGHWAYS
STATE OF NORTH CAROLINA

SOIL STABILIZATION SUMMARY SHEET

MATTING FOR EROSION CONTROL (SLOPES)

CONST SHEET NO.	LINE	FROM STATION	TO STATION	SIDE	ESTIMATE (SY)
4	4	15+50	16+31	LT	190
4	4	18+65	19+50	LT	80
		SUBTOTAL *SLOPES*			270
		SUBTOTAL *DITCHLINES*			275
MISCELLANEOUS MATTING TO BE INSTALLED AS DIRECTED BY THE ENGINEER					110
				TOTAL	655
				SAY	700

MATTING FOR EROSION CONTROL (DITCHLINES)

CONST SHEET NO.	LINE	FROM STATION	TO STATION	SIDE	ESTIMATE (SY)
4	4	15+50	16+31	LT	275

PROJECT REFERENCE NO.	SHEET NO.
B-4563	EC-3A
ROADWAY DESIGN ENGINEER	HYDRAULICS ENGINEER

DIVISION OF HIGHWAYS
STATE OF NORTH CAROLINA

SOIL STABILIZATION TIMEFRAMES

SITE DESCRIPTION	STABILIZATION TIME	TIMEFRAME EXCEPTIONS
PERIMETER DIKES, SWALES, DITCHES AND SLOPES	7 DAYS	NONE
HIGH QUALITY WATER (HQW) ZONES	7 DAYS	NONE
SLOPES STEEPER THAN 3:1	7 DAYS	IF SLOPES ARE 10' OR LESS IN LENGTH AND ARE NOT STEEPER THAN 2:1, 14 DAYS ARE ALLOWED.
SLOPES 3:1 OR FLATTER	14 DAYS	7 DAYS FOR SLOPES GREATER THAN 50' IN LENGTH.
ALL OTHER AREAS WITH SLOPES FLATTER THAN 4:1	14 DAYS	NONE, EXCEPT FOR PERIMETERS AND HQW ZONES.

8/17/99

REVISIONS

R/W REVISION (7-3-17) - CORRECTED PROPERTY OWNER DESCRIPTION FOR PARCEL NO.1 & 2.(bam)

WETHERILL ENGINEERING
1223 Jones Franklin Rd.
Raleigh, N.C. 27606
License No. F-0377
Bus: 919 851 8077
Fax: 919 851 8107
TRANSPORTATION PLANNING/DESIGN - BRIDGE/STRUCTURE DESIGN
CIVIL/SITE DESIGN - GIS/GPS - CONSTRUCTION OBSERVATION

PROJECT REFERENCE NO.	SHEET NO.
B-4563	EC-4/CONST.4
R/W SHEET NO.	
ROADWAY DESIGN ENGINEER	HYDRAULICS ENGINEER

ENVIRONMENTALLY SENSITIVE AREA
SEE PROJECT SPECIAL PROVISIONS

(1) ANNETTE L. DAUGHETY

DETAIL A
SPECIAL CUT DITCH
(Not to Scale)

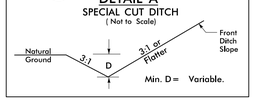

FROM STA.15+50 TO STA.16+31 LT

DETAIL B
STANDARD 'V' DITCH
(Not to Scale)

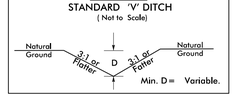

FROM STA.16+31 TO STA.16+80 LT

(2) WANDA & BUTCH HOWARD FAMILY

NC GRID NAD 83/95

FIELD
FIELDWOOD
BACKFILL DITCH
SPECIAL CUT DITCH SEE DETAIL A
STANDARD V DITCH SEE DETAIL B
CLASS B RIP RAP
PROP. CLASS II RIP RAP EMBANKEMENT PROTECTION 1.5 TONS RIP RAP
BACKFILL DITCH AND GRADE TO DRAIN SEE X-SECTION
15" CSP w/ Elbows
24" RCP IV
CLASS II RIP RAP
CFW
GREU TL-3
SR 1301 (18' BST)
GRADE TO DRAIN
30" RCP IV
REMOVE 30" RCP
CLASS II RIP RAP TO SP (TYPICAL)
FS SEE DETAIL D
BZ 1
BZ 2

CLEARING AND GRUBBING
EROSION CONTROL FOR
CONSTRUCTION SHEET 4

NOTE:
PERIMETER EROSION CONTROL MEASURES SHALL BE INSTALLED DURING CLEARING AND GRUBBING PHASE.

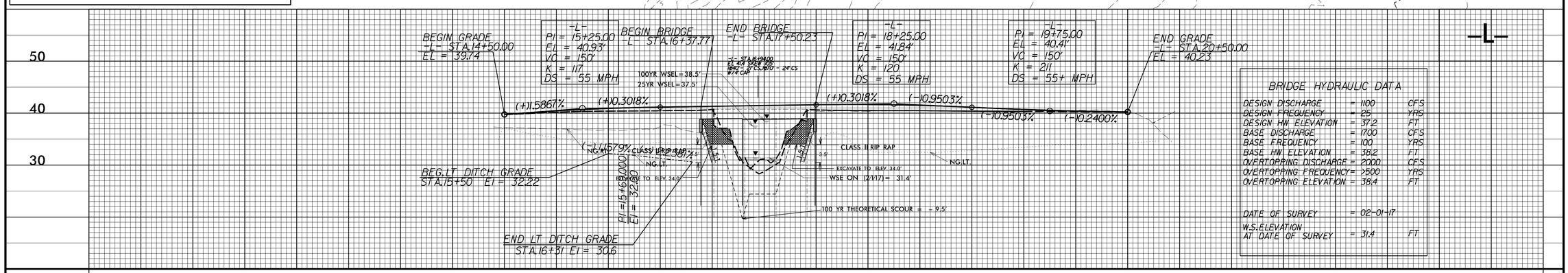

BRIDGE HYDRAULIC DATA

DESIGN DISCHARGE	= 1100	CFS
DESIGN FREQUENCY	= 25	YRS
DESIGN HW ELEVATION	= 37.2	FT
BASE DISCHARGE	= 1700	CFS
BASE FREQUENCY	= 100	YRS
BASE HW ELEVATION	= 38.2	FT
OVERTOPPING DISCHARGE	= 2000	CFS
OVERTOPPING FREQUENCY	= >500	YRS
OVERTOPPING ELEVATION	= 38.4	FT
DATE OF SURVEY	= 02-01-17	
W.S. ELEVATION AT DATE OF SURVEY	= 31.4	FT

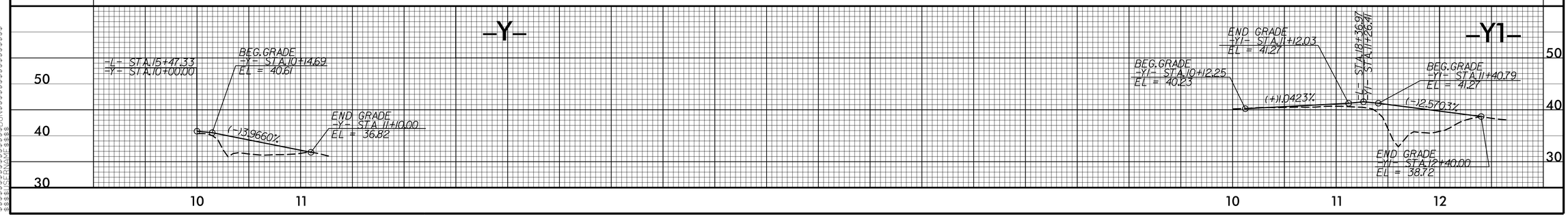

WETHERILL ENGINEERING
1223 Jones Franklin Rd.
Raleigh, N.C. 27606
License No. F-0377
Bus: 919 851 8077
Fax: 919 851 8107
TRANSPORTATION PLANNING/DESIGN - BRIDGE/STRUCTURE DESIGN
CIVIL/SITE DESIGN - GIS/GPS - CONSTRUCTION OBSERVATION

PROJECT REFERENCE NO.	SHEET NO.
B-4563	EC-5/CONST.4
R/W SHEET NO.	
ROADWAY DESIGN ENGINEER	HYDRAULICS ENGINEER

REVISIONS

R/W REVISION (7-3-17) - CORRECTED PROPERTY OWNER DESCRIPTION FOR PARCEL NO.1 & 2.(bam)

8/17/99

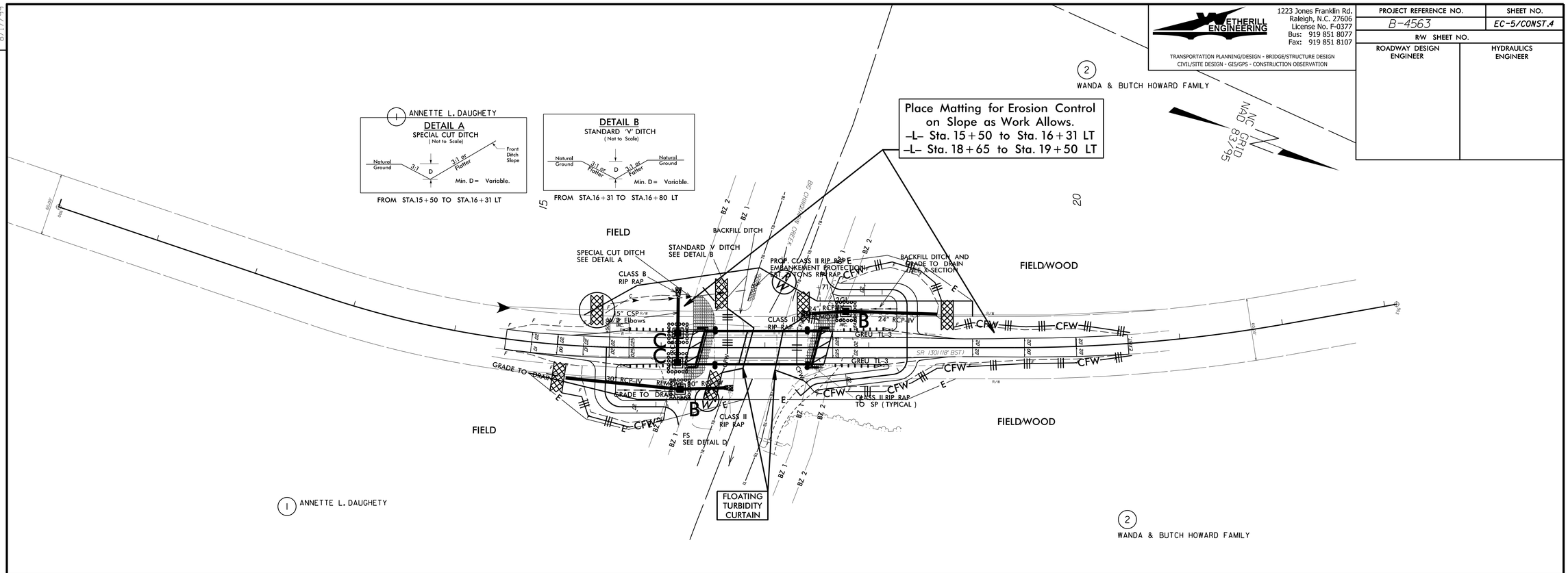

STATE	STATE PROJECT REFERENCE NO.	SHEET NO.	TOTAL SHEETS
N.C.	B-4563	RF-1	
STATE PROJ. NO.	F. A. PROJ. NO.	DESCRIPTION	

PLANTING DETAILS

SEEDLING / LINER BAREROOT PLANTING DETAIL

HEALING IN

1. Locate a healing-in site in a shady, well protected area.
2. Excavate a flat bottom trench 12 inches deep and provide drainage.

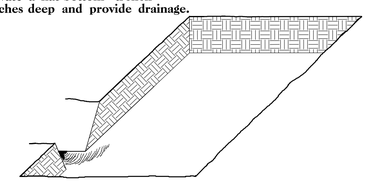

3. Backfill the trench with 2 inches well rotted sawdust. Place a 2 inch layer of well rotted sawdust at a sloping angle at one end of the trench.

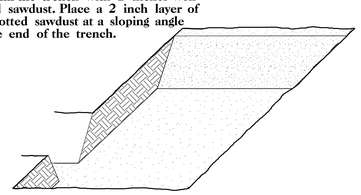

4. Place a single layer of plants against the sloping end so that the root collar is at ground level.

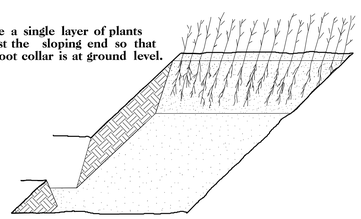

5. Place a 2 inch layer of well rotted sawdust over the roots maintaining a sloping angle.

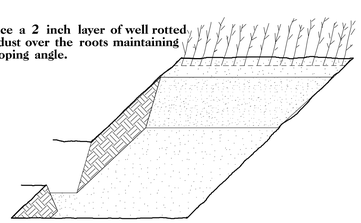

6. Repeat layers of plants and sawdust as necessary and water thoroughly.

DIBBLE PLANTING METHOD
USING THE KBC PLANTING BAR

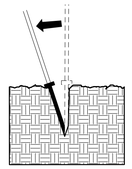

1. Insert planting bar as shown and pull handle toward planter.

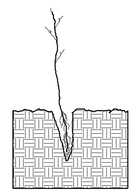

2. Remove planting bar and place seedling at correct depth.

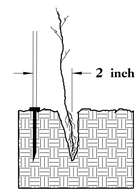

3. Insert planting bar 2 inches toward planter from seedling.

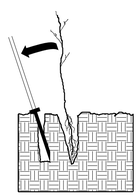

4. Pull handle of bar toward planter, firming soil at bottom.

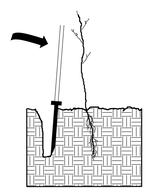

5. Push handle forward firming soil at top.

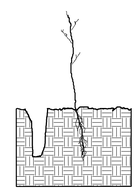

6. Leave compaction hole open. Water thoroughly.

PLANTING NOTES:

PLANTING BAG
During planting, seedlings shall be kept in a moist canvas bag or similar container to prevent the root systems from drying.

KBC PLANTING BAR
Planting bar shall have a blade with a triangular cross section, and shall be 12 inches long, 4 inches wide and 1 inch thick at center.

ROOT PRUNING
All seedlings shall be root pruned, if necessary, so that no roots extend more than 10 inches below the root collar.

REFORESTATION

☐ TREE REFORESTATION SHALL BE PLANTED 6 FT. TO 10 FT. ON CENTER, RANDOM SPACING, AVERAGING 8 FT. ON CENTER, APPROXIMATELY 680 PLANTS PER ACRE.

REFORESTATION

MIXTURE, TYPE, SIZE, AND FURNISH SHALL CONFORM TO THE FOLLOWING:

25%	LIRIODENDRON TULIPIFERA	TULIP POPLAR	12 in – 18 in BR
25%	PLATANUS OCCIDENTALIS	AMERICAN SYCAMORE	12 in – 18 in BR
25%	FRAXINUS PENNSYLVANICA	GREEN ASH	12 in – 18 in BR
25%	BETULA NIGRA	RIVER BIRCH	12 in – 18 in BR

REFORESTATION DETAIL SHEET

N.C.D.O.T. - ROADSIDE ENVIRONMENTAL UNIT

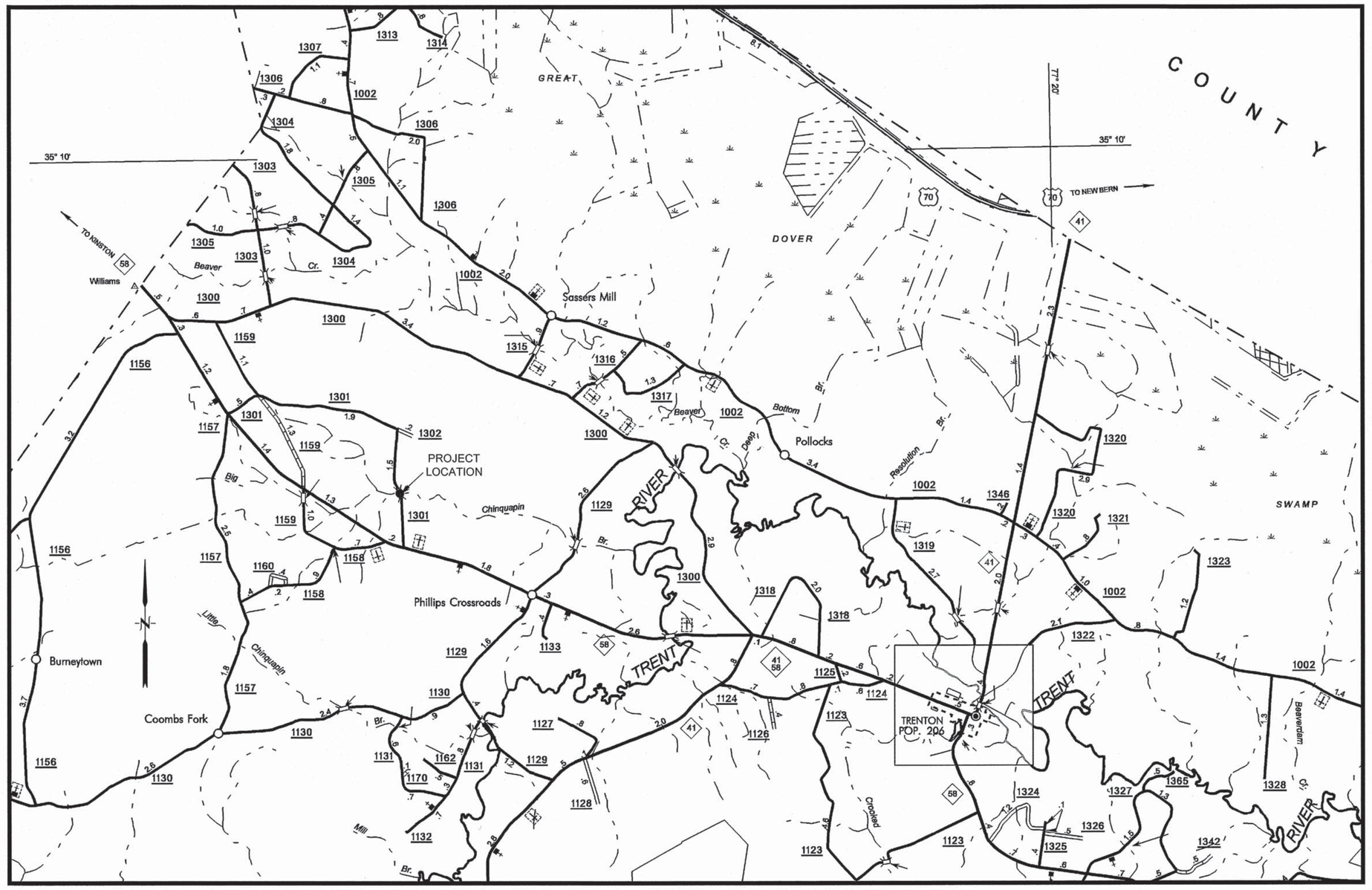

INDEX OF PLANS

Page	Title
1	COVER SHEET
2	NCSR 1301 – PINE STREET
3	GENERAL CONSTRUCTION DETAILS
4	GENERAL CONSTRUCTION DETAILS

COUNTY OF JONES

CONTRACT NO. 14 - PINE STREET BR6 RELOCATION

2017 WATER SYSTEM IMPROVEMENTS

JONES COUNTY, NORTH CAROLINA

AUGUST 28, 2017

McDAVID ASSOCIATES, INC. CORPORATE SEAL 1972 FARMVILLE, N.C.

NORTH CAROLINA PROFESSIONAL SEAL 22956 ENGINEER DAVID E. GURLEY, III

3/19/18

S 20180316 R J-20008 WHITE

REVISIONS

NO.	DATE	DESCRIPTION

McDAVID ASSOCIATES, INC.
Engineers • Planners • Land Surveyors

CORPORATE OFFICE
3714 North Main Street
P. O. Box 1828
Farmville, NC 27828
Telephone: (252) 753-2139
Facsimile: (252) 753-7220

BRANCH OFFICE
109 East Walnut Street
P. O. Box 1775
Goldsboro, NC 27533
Telephone: (919) 736-7830
Facsimile: (919) 735-7351

CAD FILE DIRECTORY: \\G-D4S\D847\2017-6059-4714
CAD DWG FILE NAME: 2017-6059-4714-P01-COVER.DWG
CAD PLOT FILE NAME: 2017-6059-4714-P01.PDF
MAP FILE REFERENCE:
PROJECT NO.: 2-17-6059-4714 — SURVEYED BY:
DRAWING NO.: — COMPUTED BY:
SCALE: 1" = 20' — DRAWN BY:
DATE: AUGUST 28, 2017 — APPROVED BY:

COVER SHEET
CONTRACT NO. 14 - PINE STREET BR6 RELOCATION
2017 WATER SYSTEM IMPROVEMENTS
COUNTY OF JONES
JONES COUNTY NORTH CAROLINA

Drawing: W:\D8xx_gen\D847_id\2017-6059-4714 Jones Co Pine St BR6 Relocation\DWG\2017-6059-4714-P01-Cover.dwg
Layout: P01
Plotted: Monday, March 12, 2018, 11:06:12am

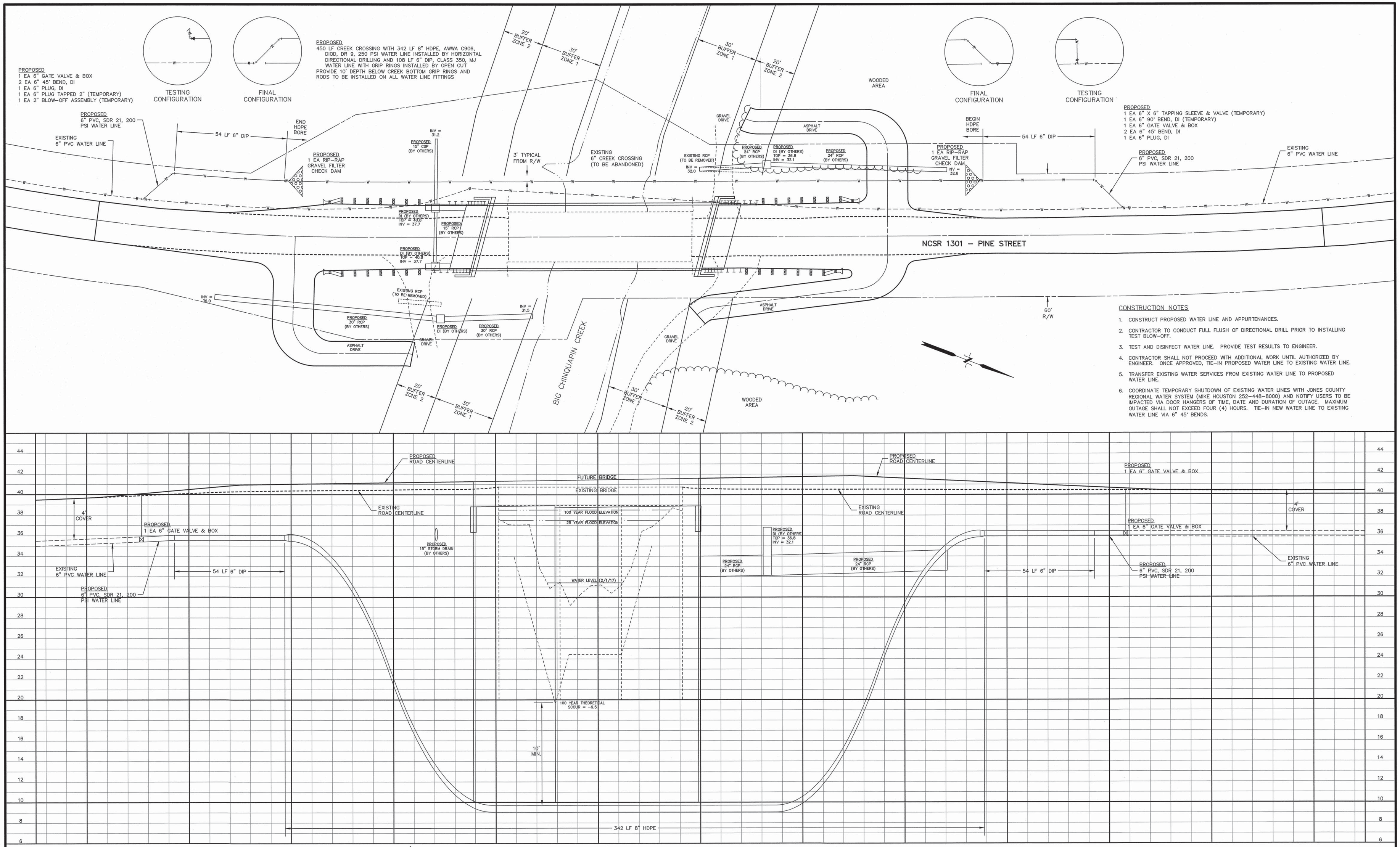

CONSTRUCTION NOTES

1. CONSTRUCT PROPOSED WATER LINE AND APPURTENANCES.
2. CONTRACTOR TO CONDUCT FULL FLUSH OF DIRECTIONAL DRILL PRIOR TO INSTALLING TEST BLOW-OFF.
3. TEST AND DISINFECT WATER LINE. PROVIDE TEST RESULTS TO ENGINEER.
4. CONTRACTOR SHALL NOT PROCEED WITH ADDITIONAL WORK UNTIL AUTHORIZED BY ENGINEER. ONCE APPROVED, TIE-IN PROPOSED WATER LINE TO EXISTING WATER LINE.
5. TRANSFER EXISTING WATER SERVICES FROM EXISTING WATER LINE TO PROPOSED WATER LINE.
6. COORDINATE TEMPORARY SHUTDOWN OF EXISTING WATER LINES WITH JONES COUNTY REGIONAL WATER SYSTEM (MIKE HOUSTON 252-448-8000) AND NOTIFY USERS TO BE IMPACTED VIA DOOR HANGERS OF TIME, DATE AND DURATION OF OUTAGE. MAXIMUM OUTAGE SHALL NOT EXCEED FOUR (4) HOURS. TIE-IN NEW WATER LINE TO EXISTING WATER LINE VIA 6" 45° BENDS.

Drawing: W:\D8xx_gen\D84x_eng\D847_ld\2017-6059-4714 Jones Co Pine St BR6 Relocation\DWG\2017-6059-4714-P02-Relocation.dwg
Layout: P02
Plotted: Monday, March 12, 2018, 11:05:57am

McDAVID ASSOCIATES, INC. CORPORATE SEAL 1972 FARMVILLE, N. C.

STATE OF NORTH CAROLINA PROFESSIONAL SEAL 22956 ENGINEER DAVID E. GURLEY III

REVISIONS		
NO.	DATE	DESCRIPTION
1.	3/10/18	REVISED ROW AND ADDED PROFILE

McDAVID ASSOCIATES, INC.
Engineers • Planners • Land Surveyors
Corporate License No. C-131

CORPORATE OFFICE
3714 North Main Street
P. O. Drawer 49
Farmville, NC 27828
Telephone: (252) 753-2139
Facsimile: (252) 753-7220

BRANCH OFFICE
109 East Walnut Street
P. O. Box 1776
Goldsboro, NC 27533
Telephone: (919) 736-7630
Facsimile: (919) 735-7351

NCSR 1301 - PINE STREET
CONTRACT NO. 14 - PINE STREET BR6 RELOCATION
2017 WATER SYSTEM IMPROVEMENTS
COUNTY OF JONES

JONES COUNTY NORTH CAROLINA

CAD FILE DIRECTORY: \\G-G4S\D847\2017-6059-4714	
CAD DWG FILE NAME: 2017-6059-4714-P02-RELOCATION.DWG	
CAD PLOT FILE NAME: 2017-6059-4714-P02.PDF	
MAP FILE REFERENCE:	
PROJECT NO.: 2-17-6059-4714	SURVEYED BY:
DRAWING NO.:	COMPUTED BY:
SCALE: H: 1"=20' V: 1"=4'	DRAWN BY:
DATE: AUGUST 28, 2017	APPROVED BY:

SHEET 2 OF 4

20000616

SD101500

TABLE 1 – MINIMUM THRUST BLOCK AREAS AND DIMENSIONS

NOMINAL PIPE SIZE	90° BEND			45° BEND			22½° BEND			11¼° BEND			TEES AND PLUGS		
	AREA (sf)	B (in)	H (in)	AREA (sf)	B (in)	H (in)	AREA (sf)	B (in)	H (in)	AREA (sf)	B (in)	H (in)	AREA (sf)	B (in)	H (in)
2"	0.4	10	6	0.2	8	4	0.1	6	3	0.1	6	3	0.3	8	6
3"	0.8	13	9	0.4	10	6	0.2	6	5	0.1	6	4	0.6	11	8
4"	1.5	18	12	0.8	13	9	0.4	10	6	0.2	6	6	1.0	15	10
6"	3.0	24	18	1.6	20	12	0.8	13	9	0.4	8	8	2.1	21	15
8"	5.2	32	24	2.8	24	17	1.4	17	12	0.7	11	11	3.6	26	20
10"	7.7	40	28	4.2	30	20	2.1	22	14	1.1	13	13	5.5	33	24
12"	10.9	50	32	5.9	36	24	3.0	24	18	1.5	15	15	7.7	40	28
16"	18.9	65	42	10.2	46	32	5.3	32	24	2.6	24	16	13.4	54	36

Bearing areas in Table 1 above are based on bearing against sand. For other soil conditions, the areas and dimensions in Table 1 above shall be multiplied by the appropriate multiplier from Table 2 below.

TABLE 2 – SOIL MULTIPLIERS

SOIL TYPE	SOIL BEARING STRENGTH (psf)	AREA MULTIPLIER	DIMENSION MULTIPLIER
Soft Clay	1,000	4.00	2.00
Silt	1,500	2.67	1.64
Sandy Silt	3,000	1.33	1.16
Sand	4,000	1.00	1.00
Sandy Clay	5,000	0.80	0.90
Hard Clay	9,000	0.45	0.67

1. Concrete shall have a minimum compressive strength of 2500 psi at 28 days.
2. Minimum thrust block bearing areas shall be as shown in Table 1. Thrust block dimensions shall be chosen such that the width (B) is between one and two times the block height (H). Dimensions shown in Table 1 are preferred but may be varied to meet site conditions.
3. Thrust blocks shall bear against the item being blocked for a minimum of 60° above and below the horizontal centerline of the item.
4. Surfaces of item being blocked shall be covered with polyethylene encasement prior to placing concrete to prevent direct contact and bonding with concrete.
5. All joints shall be accessible for repair and/or future connections. Concrete shall not cover bolts, nuts, or glands.

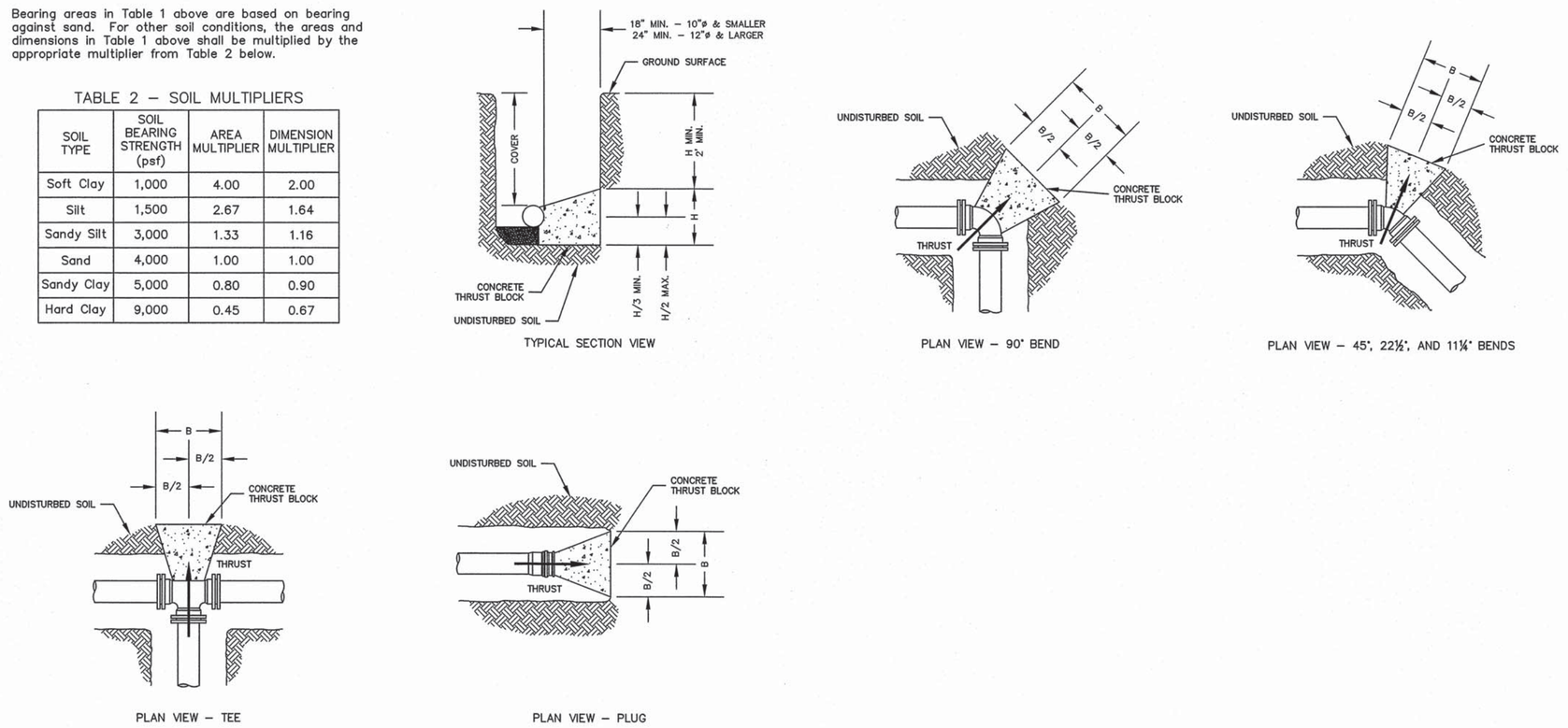

THRUST BLOCKING — A

20080124

SD103003

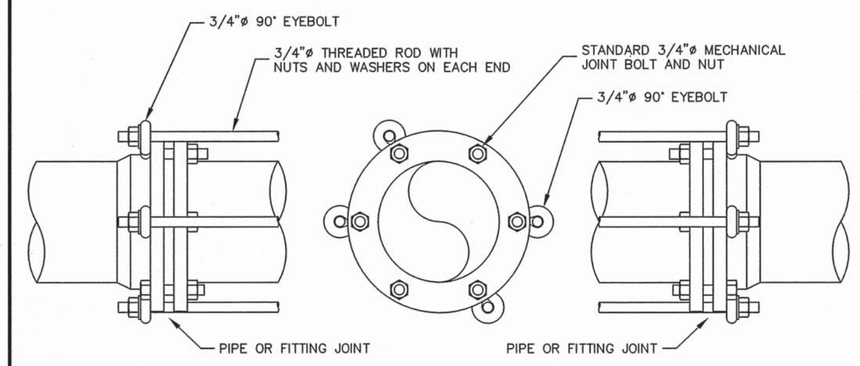

NOMINAL PIPE SIZE (inches)	NUMBER OF THRUST RODS REQUIRED
4	2
6	2
8	2
10	4
12	4

1. PROVIDE THRUST RODDING IN ACCORDANCE WITH SECTION 02668 OF THE SPECIFICATIONS.
2. PROVIDE THRUST RODDING WITH 90° EYEBOLTS, RODDING LUGS, AND THREADED RODS IN ACCORDANCE WITH THE TABLE TO THE LEFT.
3. EVENLY SPACE THE REQUIRED NUMBER OF THRUST RODS AROUND THE PIPE JOINT
4. INSTALL EYEBOLTS IN LIEU OF STANDARD MECHANICAL JOINT BOLTS IN ROUND HOLES. INSTALL RODDING LUGS USING STANDARD MECHANICAL JOINT BOLTS IN SLOTTED HOLES. DO NOT USE EYEBOLTS IN SLOTTED HOLES.
5. COMPLETELY TIGHTEN ALL MECHANICAL JOINT BOLTS BEFORE INSTALLING THREADED RODS.
6. WHERE THRUST RODDING IS REQUIRED AT THE ENDS OF STEEL CASING, WELD EYEBOLTS TO THE OUTSIDE OF THE CASING WITH 1/4" BY 3" LONG WELDS ON EACH SIDE OF EYEBOLTS. SPACE EYEBOLTS AROUND CASING AT ANGULAR LOCATIONS CORRESPONDING TO THE ANGULAR LOCATIONS OF EYEBOLTS AND/OR RODDING LUGS ON THE FITTING OR VALVE.
7. INSTALL THREADED RODS THROUGH EYEBOLTS AND RODDING LUGS. INSTALL NUT AND WASHER ON EACH END OF THREADED ROD AND TIGHTEN SNUG. DO NOT OVERTIGHTEN.

THRUST RODDING — B

SD 042502

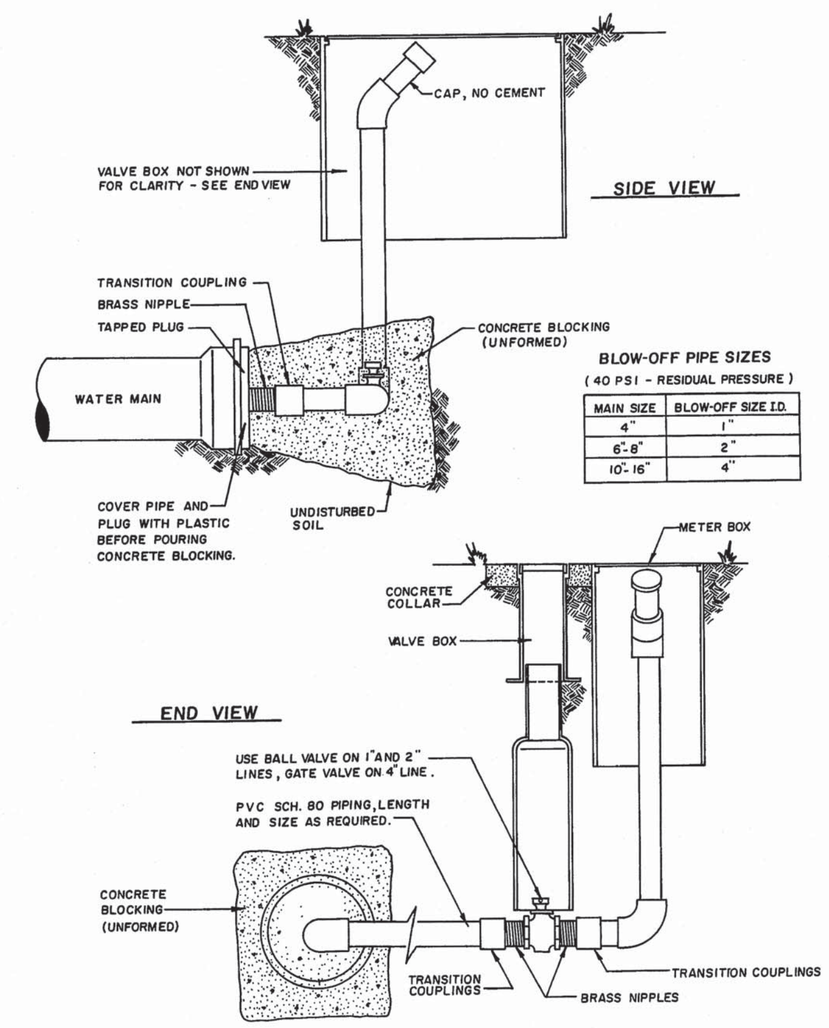

BLOW-OFF PIPE SIZES
(40 PSI - RESIDUAL PRESSURE)

MAIN SIZE	BLOW-OFF SIZE I.D.
4"	1"
6"-8"	2"
10"-16"	4"

BLOW-OFF ASSEMBLY — C

20040803

SD032520

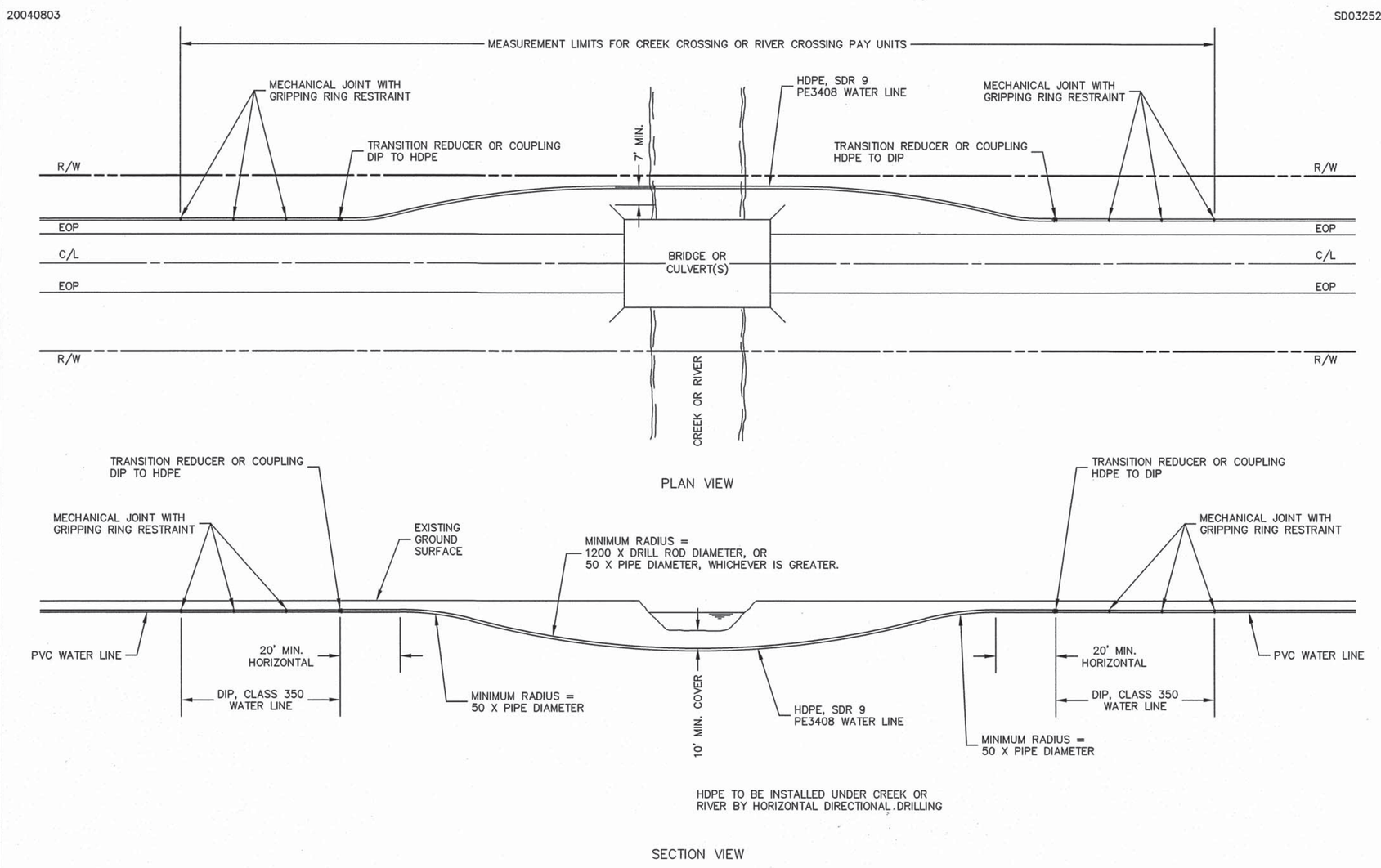

CREEK CROSSING VIA HORIZONTAL DIRECTIONAL DRILLING — D

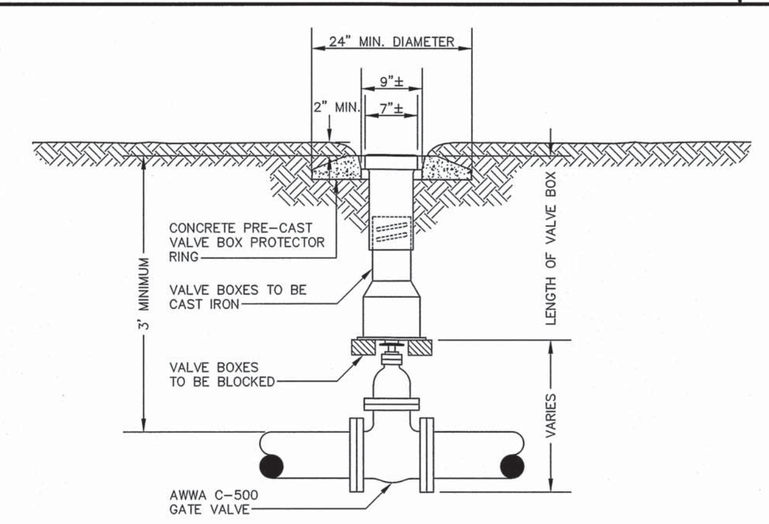

GATE VALVE AND BOX - TYPE "B" — E

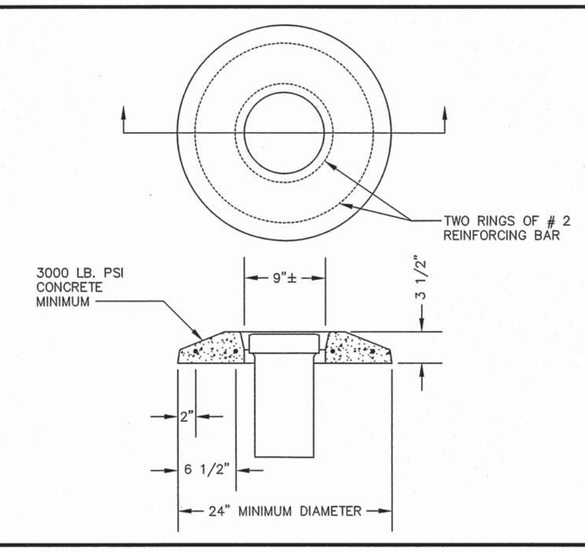

VALVE BOX PROTECTOR RING — F

20000308

SD100007

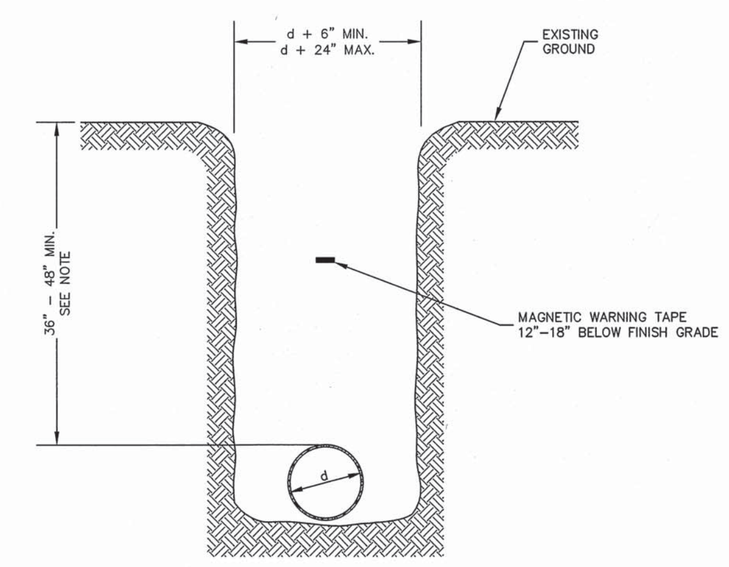

WATER LINES SHALL HAVE MINIMUM COVER OF THREE (3) FEET IN ALL DIRECTIONS WHEN INSTALLED WITHIN TWENTY (20) FEET OF THE ROAD CENTERLINE. IF WATER LINES ARE INSTALLED IN A DITCH OR DITCH SLOPE OR BEYOND TWENTY (20) FEET FROM THE ROAD CENTERLINE, MINIMUM BURY SHALL BE INCREASED TO FOUR (4) FEET IN ALL DIRECTIONS.

McDAVID ASSOCIATES, INC. CORPORATE PE SEAL 1972 FARMVILLE, N.C.

NORTH CAROLINA PROFESSIONAL SEAL 22956 ENGINEER DAVID E. GURLEY, III

2/13/18

TRENCH SECTION — G

REVISIONS

NO.	DATE	DESCRIPTION

McDAVID ASSOCIATES, INC.
Engineers • Planners • Land Surveyors

BRANCH OFFICE
109 East Walnut Street
P. O. Box 1775
Goldsboro, NC 27533
Telephone: (919) 735-7830
Facsimile: (919) 735-7351

CORPORATE OFFICE
3714 North Main Street
P. O. Box 1972
Farmville, NC 27828
Telephone: (252) 753-2139
Facsimile: (252) 753-7220

CAD FILE DIRECTORY: \\G-G4S\D847\2017-6059-4714
CAD DWG FILE NAME: 2017-6059-4714-P03-DETAILS 01.DWG
CAD PLOT FILE NAME: 2017-6059-4714-P03.PDF
MAP FILE REFERENCE:
PROJECT NO.: 2-17-6059-4714 | SURVEYED BY:
DRAWING NO.: | COMPUTED BY:
SCALE: 1" = 20' | DRAWN BY:
DATE: AUGUST 28, 2017 | APPROVED BY:

GENERAL CONSTRUCTION DETAILS
CONTRACT NO. 14 - PINE STREET BR6 RELOCATION
2017 WATER SYSTEM IMPROVEMENTS
COUNTY OF JONES
NORTH CAROLINA
JONES COUNTY

SHEET 3 OF 4

Drawing: W:\D8xx_gen\D84x_eng\D847_ld\2017-6059-4714 Jones Co Pine St BR6 Relocation\DWG\2017-6059-4714-P03-Details 01.dwg
Layout: P03
Plotted: Monday, March 12, 2018, 11:05:15am

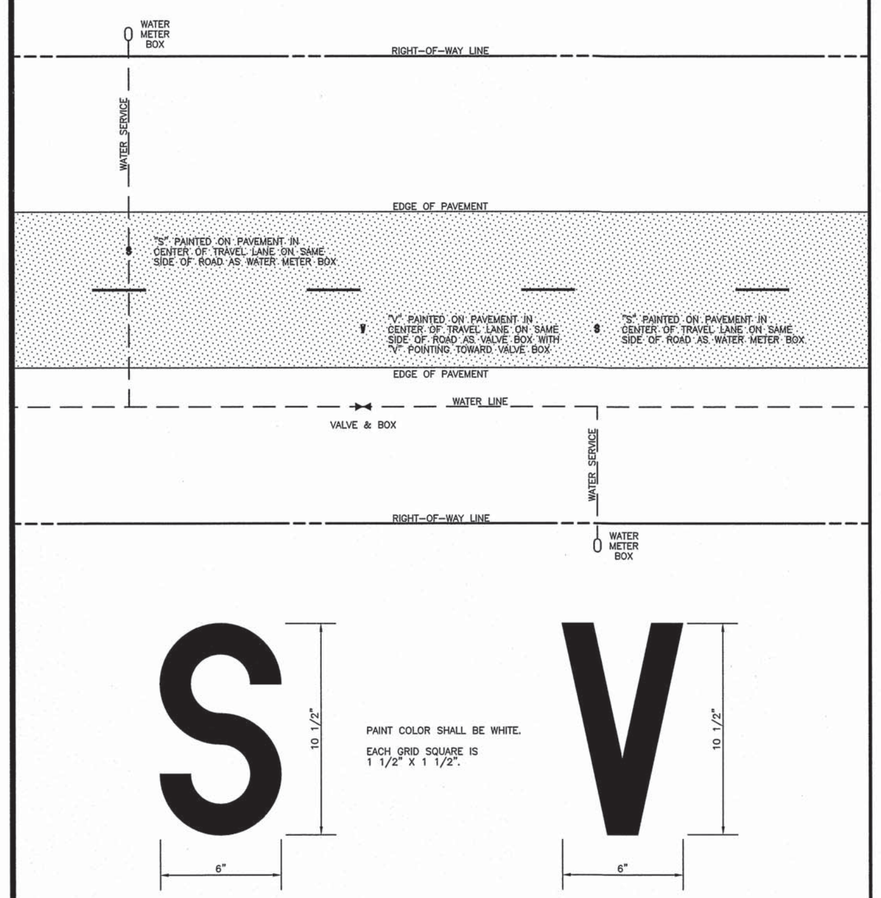

PAVEMENT MARKINGS — A

The Contractor is Responsible to Comply With The Construction General Permit NCG010000

Ground Stabilization		
Site Area Description	Stabilization Time Frame	Stabilization Time Frame Exceptions
• Perimeter dikes, swales, ditches and slopes	7 days	None
• High Quality Water (HQW) Zones	7days	None
• Slopes steeper than 3:1	7 days	If slopes are 10' or less in length and are not steeper than 2:1, 14 days are allowed.
• Slopes 3:1 or flatter	14 days	7 days for slopes greater than 50 feet in length
• All other areas with slopes flatter than 4:1	14 days	None (except for perimeters and HQW Zones)

Building Wastes Handling
• No paint or liquid wastes in stream or storm drains
• Dedicated areas for demolition, construction and other wastes must be located 50 feet from storm drains and streams unless no reasonable alternatives are available.
• Earthen-material stockpiles must be located 50' from storm drains and streams unless no reasonable alternatives are available.
• Concrete materials must be controlled to avoid contact with surface waters, wetlands, or buffers.

Inspections
• Contractor must maintain weekly inspections (Use DWQ Form)
• Contractor must maintain rain gauge and additional inspections after 0.5" rain events. (Forms available @ http://portal.ncdenr.org/web/wq/ws/su/construction)
• Inspections are required only during normal working hours.
• Inspection Reports must be available on-site during business hours unless a site specific exemption is approved.
• Copies of records must be provided with each pay request.

Sediment Basins
• Outlet structures must withdraw from the surface unless drainage area is less than 1 acre.
• Use only DWQ approved flocculants.

GENERAL PERMIT NCG10000 GUIDELINES — B

1. PRODUCTS
   A. Topsoil shall be capable of sustaining vigorous plant growth, not in frozen or muddy condition, containing not less than six (6) percent organic matter, and corrected to pH of 5.9 to 7.0.
   B. Lime shall be dolomitic agricultural–ground limestone containing not less than ten (10) percent magnesium oxide.
   C. Fertilizer shall be commercial type 10–20–20 with fifty (50) percent of the elements derived from organic sources.
   D. Seed.
      1. Seed shall be certified seed or equivalent based on North Carolina Seed Improvement Association requirements for certification. All seed shall be furnished in sealed standard containers. Seed which has become wet, moldy, or otherwise damaged prior to seeding, will not be acceptable.
      2. One (1) percent maximum weed seed content permitted.
      3. Seasonal mixtures for NC DOT right–of–ways:
         a. From September 1 to April 1:
            Seventy–five (75) pounds per acre of Kentucky 31 Fescue, fifty (50) pounds per acre of Pensacola Bahiagrass, and five (5) pounds per acre of Centipede.
         b. From April 1 to September 1:
            Seventy–five (75) pounds per acre of Pensacola Bahiagrass, fifty (50) pounds per acre of Kentucky 31 Fescue, and five (5) pounds per acre of Centipede.
      4. Alternative seasonal mixtures outside NC DOT right–of–ways:
         a. From November 15 to March 1:
            Twenty–five (25) pounds per acre of Rye Grain, seventy–five (75) pounds per acre of Tall Fescue, Kentucky 31 or Alta Tall Fescue and fifty (50) pounds per acre of Pensacola Bahiagrass.
         b. From March 1 to May 15:
            Seventy–five (75) pounds per acre of Tall Fescue, Kentucky 31 or Alta Tall Fescue and fifty (50) pounds per acre of Pensacola Bahiagrass.
         c. From May 15 to September 15:
            Sixty (60) pounds per acre of Pensacola Bahiagrass and forty (40) pounds per acre of Annual Lespedeza (Kobe or Korean).
         d. From September 15 to November 15:
            Seventy–five (75) pounds per acre of Tall Fescue, Kentucky 31 or Alta Tall Fescue and fifty (50) pounds per acre of Pensacola Bahiagrass.
   E. Mulching material shall be oat or wheat straw, in dry condition, reasonably free from weeds and foreign matter detrimental to plant life.
2. GENERAL CONDITIONS
   A. When conditions are such by reason of drought, high winds, excessive moisture or other factors where satisfactory results will not be obtained, the WORK shall be stopped, and resumed only when conditions are favorable.
3. SEEDBED PREPARATION
   A. Protect existing underground improvements from damage.
   B. Clear the ground surface of stumps, stones, roots, cables, wire, grade stakes, and other materials that might hinder proper grading, tillage, seeding or subsequent maintenance operations.
   C. Remove contaminated subsoil.
   D. Grade to eliminate rough spots and low area where ponding may occur. Maintain smooth, uniform grade.
   E. Assure positive drainage away form buildings.
   F. Finish ground level firm and sufficient to prevent sinkage pockets when irrigation is applied.
   G. Grades on the area to be seeded shall be maintained to a true and even condition. Maintenance shall include any necessary repairs to previously graded areas.
   H. Uniformly apply lime at a rate of 4000 pounds per acre prior to preparation of seedbed.
   I. Thoroughly till all graded areas to a depth of at least five (5) inches by plowing, disking, harrowing, or other approved methods until the condition of the soil is acceptable. On sites where soil conditions are such that high clay content and excessive compaction cause difficulty in getting clods and lumps effectively pulverized, use rotary tillage machinery until soil mixture is acceptable and no clods or clumps larger than one–half (1/2) inch in diameter remain.
   J. Remove from site foreign materials collected during tilling.
   K. Uniformly apply fertilizer at a rate of 500 pounds per acre of 10–20–20 analysis.
   L. Incorporate the fertilizer into the upper three (3) or four (4) inches of prepared seedbed just prior to the last tillage operation. However, never apply fertilizer more than (3) days prior to seeding. Use fertilizer immediately after delivery or store it in a manner that will not permit it to harden or destroy its effectiveness.
   M. The seedbed should be firm and compact. Prior to seeding, grade the seedbed and lightly compact it with a land roller, such as a cultipacker.
4. SEEDING
   A. Do not sow seed immediately following rain, when ground is too dry, or during windy periods. Do not apply grass seed and fertilizer at the same time in the same machine.
   B. Apply seed at specified seasonal rate.
   C. Rake seed in lightly.
   D. Roll seeded area with roller not exceeding 112 pounds (50 kg).
   E. Apply water with fine spray immediately after each area has been sown.
5. MULCHING PRACTICES
   A. Apply one (1) to two (2) tons of mulching material per acre to seeded areas. Apply mulching material with mechanical type equipment and obtain a uniform distribution which permits sunlight to penetrate to the ground surface. Bare areas and areas with thick clumps of straw are not acceptable.
   B. Anchor mulching material.
      1. In areas with gentle slopes, crimp mulching material into soil.
      2. On steeper slopes such as the sides of swales, anchor mulch with netting or asphalt tack.
      3. On road shoulders, anchor mulch with asphalt tack if crimping is unsuccessful.
      4. Use asphalt tack in lieu of crimping when required by regulatory agencies or if directed by the ENGINEER. Typically, asphalt tack in lieu of crimping will be required in areas with high traffic because of wind generated by the traffic.
      5. On slopes steeper than 2:1, jute, excelsior, or synthetic matting may be required to protect the slope from erosion. They should be installed before mulch is applied to surrounding areas.
6. WATERING
   A. Lightly water to aid breakdown of fertilizer and to provide moist soil for seed.
7. MAINTENANCE PERIOD
   A. Maintenance Period: until final acceptance.
8. MAINTENANCE
   A. Maintain surfaces and supply additional topsoil where necessary, including areas affected by erosion.
   B. Water to ensure uniform seed germination and to keep surface of soil damp.
   C. Apply water slowly so that surface of soil will not puddle and crust.
   D. Except for rye grain, cut grass first time when it reaches height of two and one–half (2 1/2) inches (60 mm) and maintain to minimum of two (2) inches (50 mm). Do not cut more than 1/3 of blade at any one mowing.
   E. If rye grain is planted mow to maintain grass height between three (3) and six (6) inches until Fescue matures enough to provide ground cover.
   F. After first mowing water grass sufficient to moisten soil from three (3) inches to five (5) inches (76 to 127 mm) deep.
   G. Apply weed killer when weeds start developing, during calm weather when air temperature is above fifty (50) degrees Fahrenheit [ten (10) degrees Celsius].
   H. Replant damaged grass areas showing root growth failure, deterioration, bare or thin spots, and eroded areas.
9. RESTORATION
   A. Restore grassed areas until accepted.
10. ACCEPTANCE
   A. Seeded areas will be accepted at end of maintenance period when seeded areas are properly established and otherwise acceptable.

SEEDING CONSTRUCTION NOTES — C

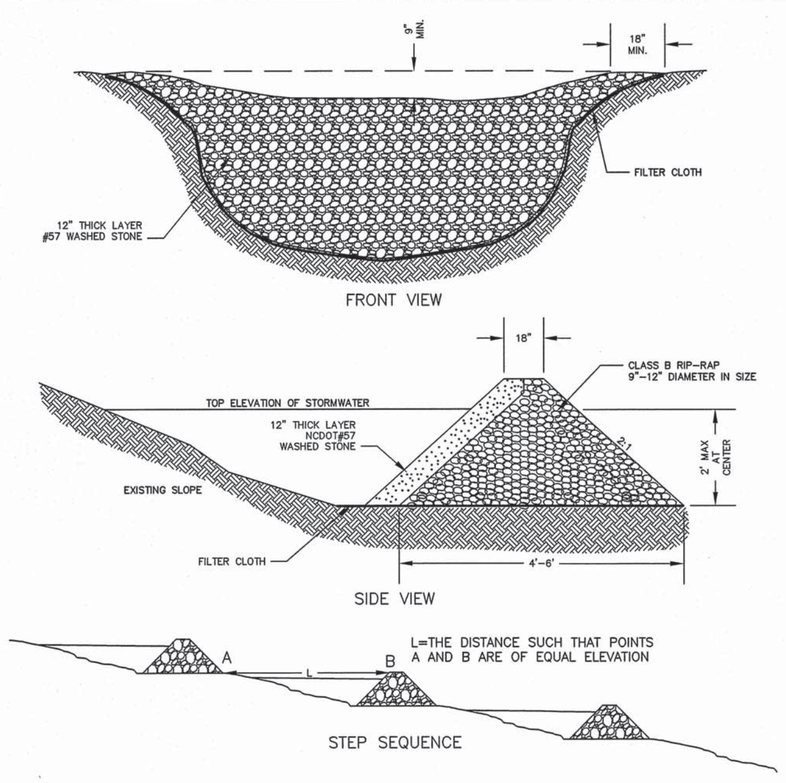

CONSTRUCTION NOTES:

1. PLACE STRUCTURAL STONE (CLASS B) ON A FILTER FABRIC FOUNDATION. THE CREST WIDTH OF THE DAM SHOULD BE A MINIMUM OF 2 FEET.
2. CONSTRUCT SPILLWAY A MINIMUM OF 12 INCHES BELOW LOWEST BANK.
3. PLACE SEDIMENT CONTROL STONE (#57) ON THE UPSTREAM SIDE OF THE DAM A MINIMUM 1 FOOT THICK.
4. PROVIDE AN APRON 3 TIMES THE HEIGHT OF THE DAM. THE APRON WIDTH SHALL BE AT LEAST 4 FEET LONG. UNDERCUT THE APRON SO THAT THE TOP OF THE APRON IS FLUSH WITH THE SURROUNDING GRADE.
5. EXTEND THE STONE AT LEAST 1.5 FEET BEYOND THE DITCH BANK TO KEEP WATER FROM CUTTING AROUND THE ENDS OF THE CHECK DAM.
6. EXCAVATE SEDIMENT STORAGE AREA.

MAINTENANCE NOTES:

1. INSPECT AT LEAST WEEKLY AND AFTER EACH SIGNIFICANT RAINFALL EVENT AND REPAIR IMMEDIATELY. CLEAN OUT SEDIMENT, STRAW, LIMBS, OR OTHER DEBRIS THAT COULD CLOG THE CHANNEL WHEN NEEDED.
2. ANTICIPATE SUBMERGENCE AND DEPOSITION ABOVE THE CHECK DAM AND EROSION FROM HIGH FLOWS AROUND THE EDGES OF THE DAM. CORRECT ALL DAMAGE IMMEDIATELY.
3. REMOVE SEDIMENT ACCUMULATED BEHIND THE DAMS AS NEEDED TO PREVENT DAMAGE TO CHANNEL VEGETATION, ALLOW THE CHANNEL TO DRAIN THROUGH THE STONE CHECK DAM, AND PREVENT LARGE FLOWS FROM CARRYING SEDIMENT OVER THE DAM. ADD STONES TO DAMS AS NEEDED TO MAINTAIN DESIGN HEIGHT AND CROSS SECTION.

RIP RAP GRAVEL FILTER CHECK DAM — D

20130613 SD070525

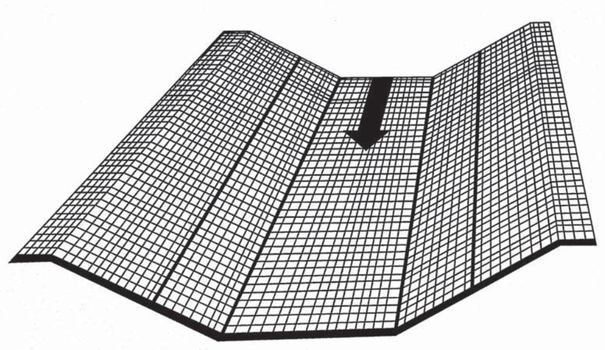

DITCH TREATMENT SHALL BE USED IN AREAS WHERE STEEP GRADES COULD CAUSE DITCH EROSION. USE OF JUTE, MESH, EXCELSIOR MATTING, OR FIBERGLASS ROVING IS ACCEPTABLE. DITCH TREATMENT SHOULD BE INSTALLED BEFORE MULCHING OPERATION.

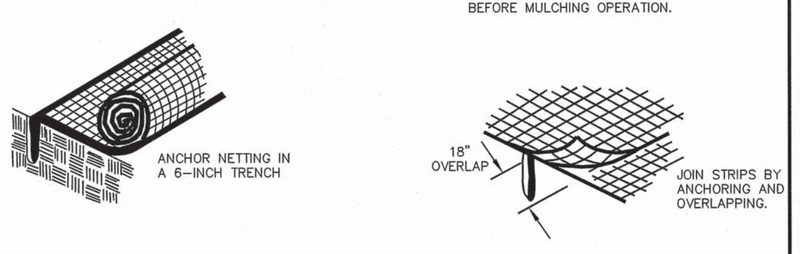

EXCELSIOR MATTING WITH PHOTO DEGRADABLE PLASTIC WEAVING SHALL BE USED AS AUTHORIZED BY THE ENGINEER FOR SLOPE TREATMENT IN AREAS WHERE STEEP GRADES MAY CAUSE EROSION. INSTALLATION INSTRUCTIONS AS FOLLOWS:

1. APPLY LIME, FERTILIZER AND SEED BEFORE LAYING THE MAT.
2. START LAYING THE MAT FROM TOP OF THE SLOPE AND UNROLL IT DOWN THE GRADE. ALLOW MATTING TO LAY LOOSELY ON THE SOIL OR MULCH WITHOUT WRINKLES, DO NOT STRETCH.
3. TO SECURE THE NET, BURY THE UPSLOPE END IN A SLOT OR TRENCH NO LESS THAN 6 INCHES DEEP, COVER WITH SOIL, AND TAMP FIRMLY AS SHOWN. STAPLE THE MAT EVERY 12 INCHES ACROSS THE TOP END AND EVERY 3 FT AROUND THE EDGES AND BOTTOM. WHERE 2 STRIPS OF NET ARE LAID SIDE BY SIDE, THE ADJACENT EDGES SHOULD BE OVERLAPPED 3 INCHES AND STAPLED TOGETHER. EACH STRIP OF NETTING SHOULD ALSO BE STAPLED DOWN THE CENTER, EVERY 3 FT. DO NOT STRETCH THE NET WHEN APPLYING STAPLES.
4. TO JOIN TWO STRIPS, CUT A TRENCH TO ANCHOR THE END OF THE NEW NET. OVERLAP THE END OF THE PREVIOUS ROLL 18 INCHES, AS SHOWN, AND STAPLE EVERY 12 INCHES JUST BELOW THE ANCHOR SLOT.

EXCELSIOR MATTING — E

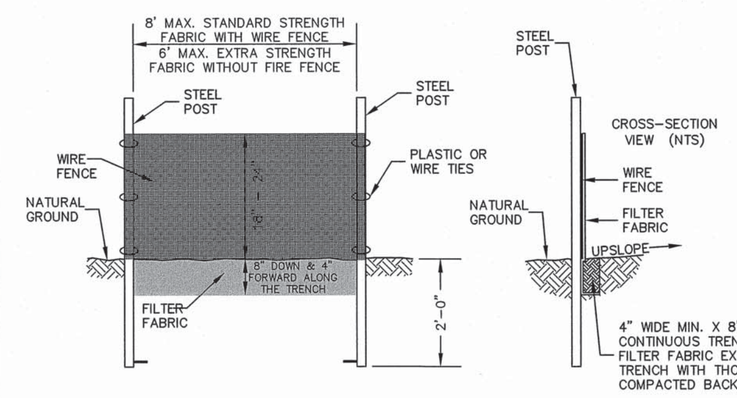

CONSTRUCTION SPECIFICATIONS

MATERIALS

1. USE A SYNTHETIC FILTER FABRIC OF AT LEAST 95% BY WEIGHT OF POLYOLEFINS OR POLYESTER, WHICH IS CERTIFIED BY THE MANUFACTURER OR SUPPLIER AS CONFORMING TO THE REQUIREMENTS IN ASTM D 6461. SYNTHETIC FILTER FABRIC SHOULD CONTAIN ULTRAVIOLET RAY INHIBITORS AND STABILIZERS TO PROVIDE A MINIMUM OF 6 MONTHS OF EXPECTED USABLE CONSTRUCTION LIFE AT A TEMPERATURE RANGE OF 0 TO 120° F.

2. ENSURE THAT POSTS FOR SEDIMENT FENCES ARE 1.33 LB/LINEAR FT STEEL WITH A MINIMUM LENGTH OF 5 FEET. MAKE SURE THAT STEEL POSTS HAVE PROJECTIONS TO FACILITATE FASTENING THE FABRIC.

3. FOR REINFORCEMENT OF STANDARD STRENGTH FILTER FABRIC, USE WIRE FENCE WITH A MINIMUM 14 GAUGE AND A MAXIMUM MESH SPACING OF 6 INCHES.

CONSTRUCTION

1. CONSTRUCT THE SEDIMENT BARRIER OF STANDARD STRENGTH OR EXTRA STRENGTH SYNTHETIC FILTER FABRICS.

2. ENSURE THAT THE HEIGHT OF THE SEDIMENT FENCE DOES NOT EXCEED 24 INCHES ABOVE THE GROUND SURFACE. (HIGHER FENCES MAY IMPOUND VOLUMES OF WATER SUFFICIENT TO CAUSE FAILURE OF THE STRUCTURE.

3. CONSTRUCT THE FILTER FABRIC FROM A CONTINUOUS ROLL CUT TO THE LENGTH OF THE BARRIER TO AVOID JOINTS. WHEN JOINTS ARE NECESSARY, SECURELY FASTEN THE FILTER CLOTH ONLY AT A SUPPORT POST WITHIN 4 FEET MINIMUM OVERLAP TO THE NEXT POST.

4. SUPPORT STANDARD STRENGTH FILTER FABRIC BY WIRE MESH FASTENED SECURELY TO THE UPSLOPE SIDE OF THE POSTS. EXTEND THE WIRE MESH SUPPORT TO THE BOTTOM OF THE TRENCH. FASTEN THE WIRE REINFORCEMENT, THEN FABRIC ON THE UPSLOPE SIDE OF THE FENCE POST. WIRE OR PLASTIC ZIP TIES SHOULD HAVE MINIMUM 50 POUND TENSILE STRENGTH.

5. WHEN A WIRE MESH SUPPORT FENCE IS USED, SPACE POSTS A MAXIMUM OF 8 FEET APART. SUPPORT POSTS SHOULD BE DRIVEN SECURELY INTO THE GROUND A MINIMUM OF 24 INCHES.

6. EXTRA STRENGTH FILTER FABRIC WITH 6 FEET POST SPACING DOES NOT REQUIRE WIRE MESH SUPPORT FENCE. SECURELY FASTEN THE FILTER FABRIC DIRECTLY TO POSTS. WIRE OR PLASTIC ZIP TIES SHOULD HAVE MINIMUM 50 POUND TENSILE STRENGTH.

7. EXCAVATE A TRENCH APPROXIMATELY 4 INCHES WIDE AND 8 INCHES DEEP ALONG THE PROPOSED LINE OF POSTS AND UPSLOPE FROM THE BARRIER.

8. PLACE 12 INCHES OF THE FABRIC ALONG THE BOTTOM AND SIDE OF THE TRENCH.

9. BACKFILL THE TRENCH WITH SOIL PLACED OVER THE FILTER FABRIC AND COMPACT. THOROUGH COMPACTION OF THE BACKFILL IS CRITICAL TO SILT FENCE PERFORMANCE.

10. DO NOT ATTACH FILTER FABRIC TO EXISTING TREES.

INSTALLATION SPECIFICATIONS

1. THE BASE OF BOTH END POSTS SHOULD BE AT LEAST ONE FOOT HIGHER THAN THE MIDDLE OF THE FENCE. CHECK WITH A LEVEL IF NECESSARY.

2. INSTALL POSTS 4 FEET APART IN CRITICAL AREAS 6 FEET APART ON STANDARD APPLICATIONS.

3. INSTALL POSTS 2 FEET DEEP ON THE DOWNSTREAM SIDE OF THE SILT FENCE, AND AS CLOSE AS POSSIBLE TO THE FABRIC, ENABLING POSTS TO SUPPORT THE FABRIC FROM UPSTREAM WATER PRESSURE.

4. INSTALL POSTS WITH THE NIPPLES FACING AWAY FROM THE SILT FABRIC.

5. ATTACH THE FABRIC TO EACH POST WITH THREE TIES, ALL SPACED WITHIN THE TOP 8 INCHES OF THE FABRIC. ATTACH EACH TIE DIAGONALLY 45 DEGREES THROUGH THE FABRIC, WITH EACH PUNCTURE AT LEAST 1 INCH VERTICALLY APART. ALSO, EACH TIE SHOULD BE POSITIONED TO HANG ON A POST NIPPLE WHEN TIGHTENED TO PREVENT SAGGING.

6. WRAP APPROXIMATELY 6 INCHES OF FABRIC AROUND THE END POSTS AND SECURE WITH 3 TIES.

7. NO MORE THAN 24 INCHES OF A 36 INCH FABRIC IS ALLOWED ABOVE GROUND LEVEL.
8. THE INSTALLATION SHOULD BE CHECKED AND CORRECTED FOR ANY DEVIATIONS BEFORE COMPACTION.

9. COMPACTION IS VITALLY IMPORTANT FOR EFFECTIVE RESULTS. COMPACT THE SOIL IMMEDIATELY NEXT TO THE SILT FENCE FABRIC WITH THE FRONT WHEEL OF THE TRACTOR, SKID STEER, OR ROLLER EXERTING AT LEAST 60 POUNDS PER SQUARE INCH. COMPACT THE UPSTREAM SIDE FIRST, AND THEN EACH SIDE TWICE FOR A TOTAL OF 4 TRIPS.

MAINTENANCE

1. INSPECT SEDIMENT FENCES AT LEAST ONCE A WEEK AND AFTER EACH RAINFALL. MAKE ANY REQUIRED REPAIRS IMMEDIATELY.

2. SHOULD THE FABRIC OF A SEDIMENT FENCE COLLAPSE, TEAR, DECOMPOSE OR BECOME INEFFECTIVE, REPLACE IT PROMPTLY.

3. REMOVE SEDIMENT DEPOSITS AS NECESSARY TO PROVIDE ADEQUATE STORAGE VOLUME FOR THE NEXT RAIN AND TO REDUCE PRESSURE ON THE FENCE. TAKE CARE TO AVOID UNDERMINING THE FENCE DURING CLEANOUT.

4. REMOVE ALL FENCING MATERIALS AND UNSTABLE SEDIMENT DEPOSITS AND BRING THE AREA TO GRADE AND STABILIZE IT AFTER THE CONTRIBUTING DRAINAGE AREA HAS BEEN PROPERLY STABILIZED.

SILT FENCING — F

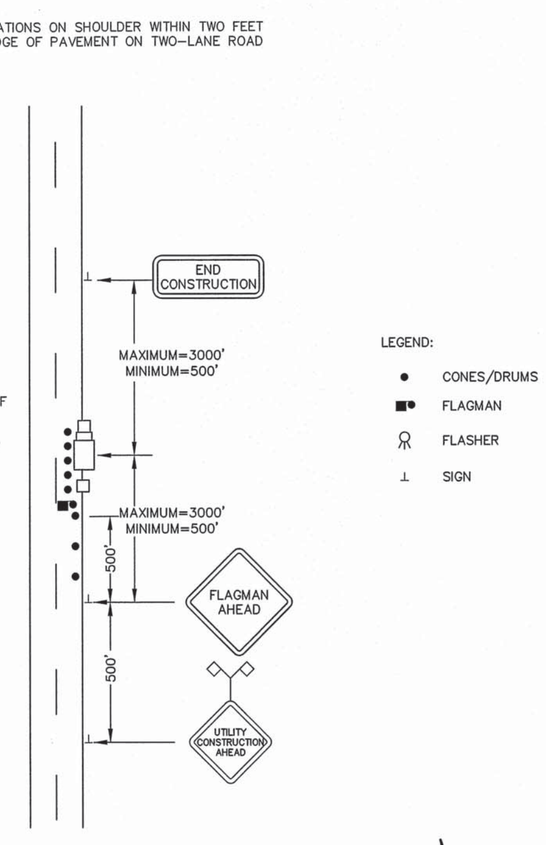

TRAFFIC CONTROL SHALL AT A MINIMUM COMPLY WITH PART VI OF THE "MANUAL ON UNIFORM TRAFFIC CONTROL DEVICES" AND ANY SUPPLEMENTS PUBLISHED BY THE NCDOT.

IF TRAFFIC ENCROACHES INTO OPPOSING LANES, MORE EXTENSIVE SIGNING IS REQUIRED IN BOTH DIRECTIONS, ALONG WITH A FLAGMAN.

McDAVID ASSOCIATES, INC. CORPORATE SEAL 1972 FARMVILLE, N.C.

NORTH CAROLINA PROFESSIONAL SEAL 22956 ENGINEER DAVID E. GURLEY III

TRAFFIC CONTROL — G

REVISIONS

NO.	DATE	DESCRIPTION

McDAVID ASSOCIATES, INC.
Engineers • Planners • Land Surveyors

CORPORATE OFFICE
120 North Main Street
P. O. Drawer 749
Farmville, N.C. 27828
Telephone: (252) 753-2139
Facsimile: (252) 753-7220

BRANCH OFFICE
109 East Walnut Street
P. O. Box 177
Goldsboro, N.C. 27533
Telephone: (919) 736-7830
Facsimile: (919) 735-7351

CAD FILE DIRECTORY: \\G-C4S\D847\2017-6059-4714
CAD DWG FILE NAME: 2017-6059-4714-P04-DETAILS 02.DWG
CAD PLOT FILE NAME: 2017-6059-4714-P04.PDF
MAP FILE REFERENCE:
PROJECT NO.: 2-17-6059-4714 | SURVEYED BY:
DRAWING NO.: | COMPUTED BY:
SCALE: 1" = 20' | DRAWN BY:
DATE: AUGUST 28, 2017 | APPROVED BY:

GENERAL CONSTRUCTION DETAILS
CONTRACT NO. 14 - PINE STREET BR6 RELOCATION
2017 WATER SYSTEM IMPROVEMENTS
COUNTY OF JONES
JONES COUNTY NORTH CAROLINA

Drawing: W:\D8xx_gen\D84x_eng\D847_id\2017-6059-4714 Jones Co Pine St BR6 Relocation\DWG\2017-6059-4714-P04-Details 02.dwg
Layout: P04
Plotted: Monday, March 12, 2018, 11:06:34am

TIP PROJECT: B-4563

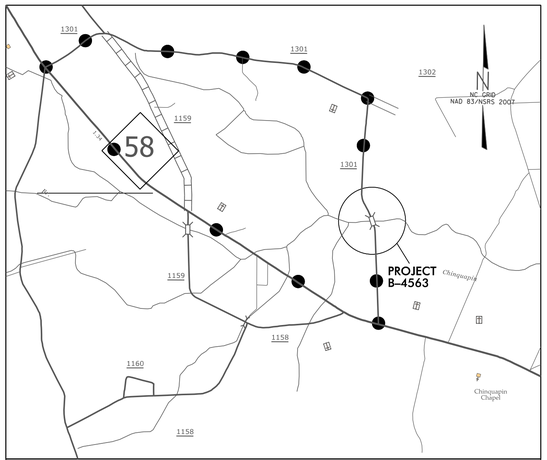

(NOT TO SCALE) VICINITY MAP

OFFSITE DETOUR

STATE OF NORTH CAROLINA
DIVISION OF HIGHWAYS

UTILITIES BY OTHERS PLANS
JONES COUNTY

T.I.P. NO.	SHEET NO.
B–4563	UO–1

NOTE:
ALL UTILITY WORK SHOWN ON THIS SHEET IS DONE BY OTHERS.
NO PAYMENT WILL BE MADE TO THE CONTRACTOR FOR UTILITY WORK SHOWN ON THIS SHEET.

LOCATION: BRIDGE #6 OVER BIG CHINQUAPIN CREEK ON SR 1301 (PINE STREET)

TYPE OF WORK: TELEPHONE RELOCATION

NAD 83/NSRS 2007 NC GRID

UO2 4

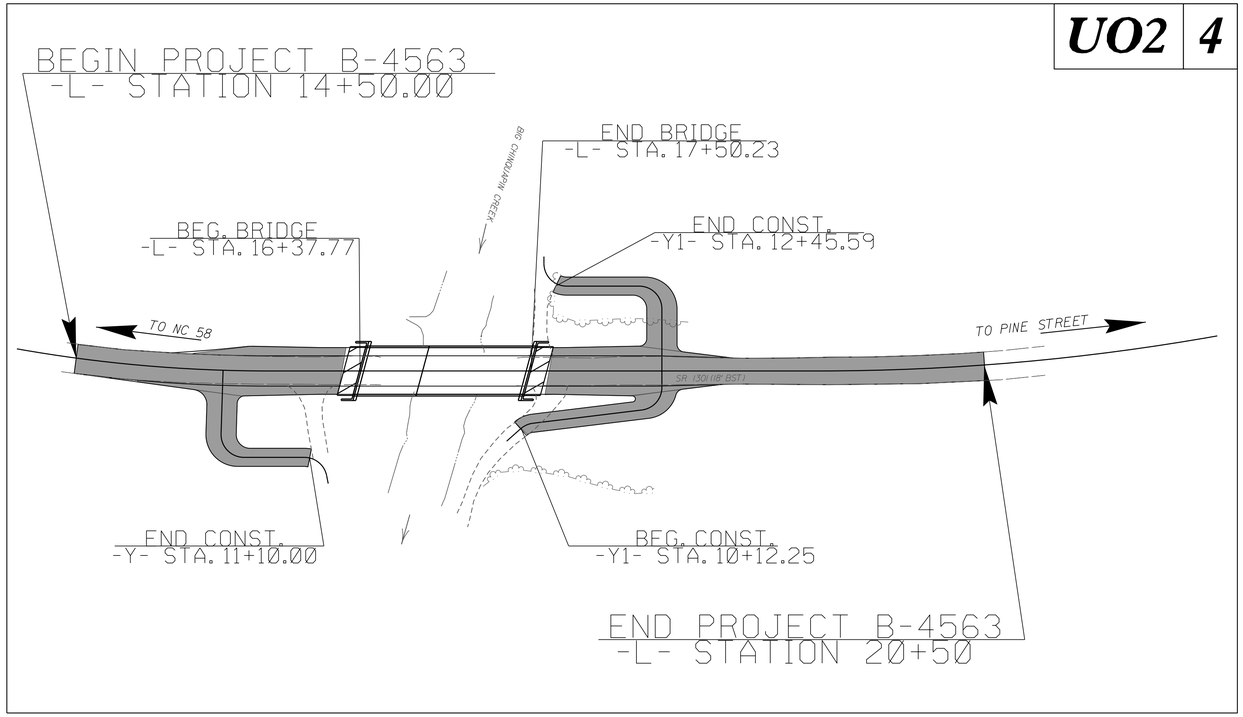

GRAPHIC SCALES

50 25 0 50 100
PLANS

50 25 0 50 100
PROFILE (HORIZONTAL)

10 5 0 10 20
PROFILE (VERTICAL)

INDEX OF SHEETS

SHEET NO.:	*DESCRIPTION:*
UO–1	*TITLE SHEET*
UO–2	*UBO PLAN SHEET*

UTILITY OWNERS WITH CONFLICTS

(A) TELEPHONE – CENTURYLINK

PREPARED IN THE OFFICE OF:

WETHERILL ENGINEERING

1223 Jones Franklin Rd. Raleigh, N.C. 27606
License No. F-0377
Bus: 919.851.8077 Fax: 919.851.8107

John D. Schriner, PLS — *UTILITY PROJECT MANAGER*
John D. Schriner, PLS — *PROJECT UTILITY COORDINATOR*

DIVISION OF HIGHWAYS
DIVISION 2

Highway Division 2
105 Pactolus Hwy. (NC 33)
PO Box 1587
Greenville, NC 27835

Lang Jones — *Division Design Engineer*
Dwayne Smith — *Division Utility Coordinator*

09/08/09
$$$$SYSTIME$$$$
$$$$DGN$$$$
$$$$USERNAME$$$$

PROJECT REFERENCE NO.	SHEET NO.
B-4563	U0-2
THIS SHEET CORRESPONDS TO RDY-4	

UTILITIES BY OTHERS

ALL PROPOSED UTILITY WORK SHOWN ON THIS SHEET WILL BE DONE BY OTHERS. NO PAYMENT WILL BE MADE TO THE CONTRACTOR FOR PROPOSED UTILITY WORK SHOWN ON THIS SHEET.

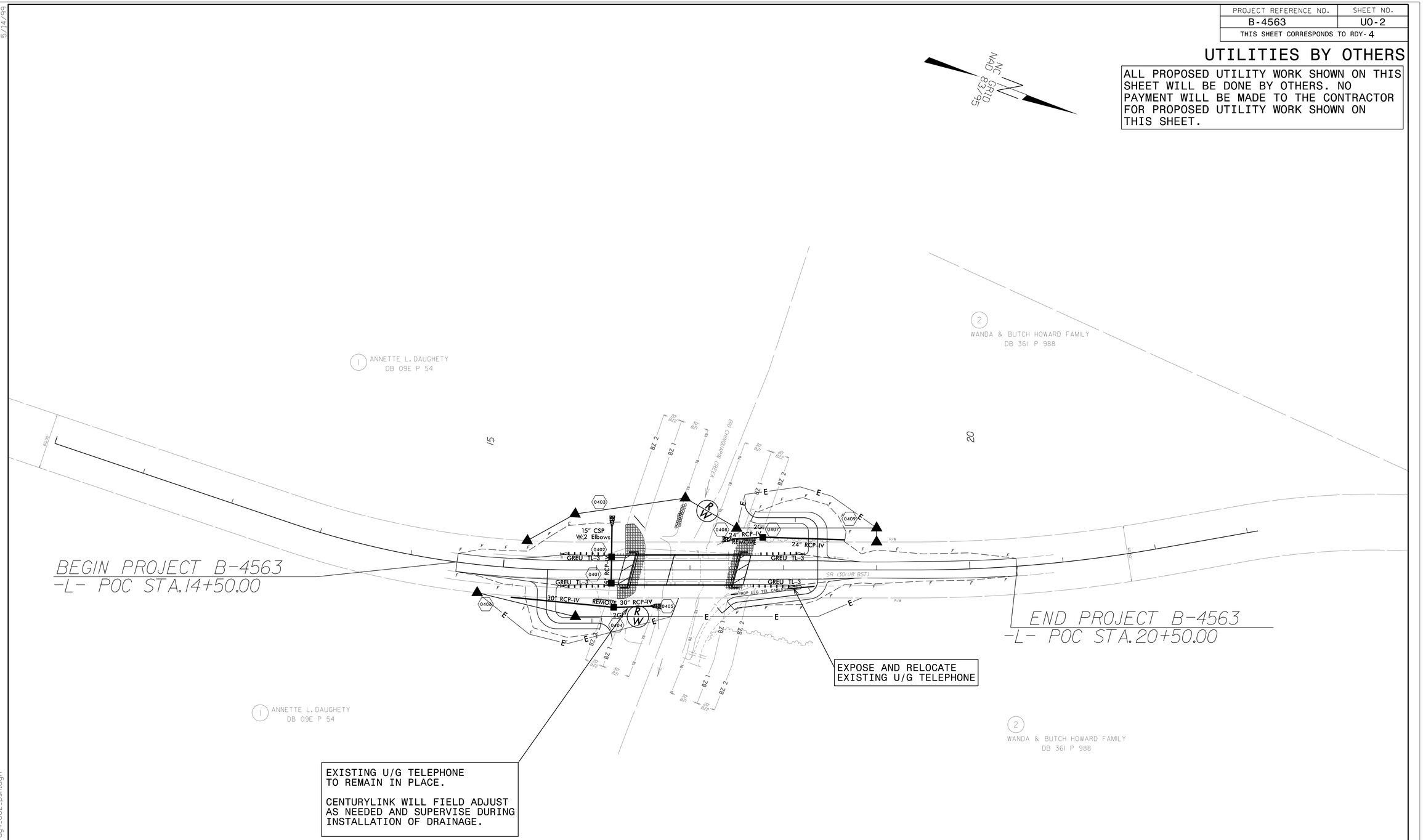

5/14/99

2:12:40 PM
Utilities\Engineering\UBO\Proj\B4563_ut_rdy4_U02_psh.dgn

PROJ. REFERENCE NO.	SHEET NO.
B-4563	X-1

STATE OF NORTH CAROLINA
DIVISION OF HIGHWAYS

NOTE: EMBANKMENT COLUMNDOES NOT INCLUDE BACKFILL FOR UNDERCUT

CROSS-SECTION SUMMARY

Station L	Uncl. Exc. (cu. yd.)	Embt (cu. yd.)	Station Y1	Uncl. Exc. (cu. yd.)	Embt (cu. yd.)
14+50.00	0	0	11+67.41	0	101
14+75.00	1	1	11+92.10	0	172
15+00.00	2	2	12+12.94	0	82
15+25.00	3	4	12+40.00	3	41
15+47.33	2	5			
15+50.00	0	1			
15+69.00	8	21			
16+00.00	37	48			
16+12.78	23	17			
16+18.22	9	7			
16+25.66	10	9			
16+31.34	4	7			
16+37.77	1	7			

Approximate quantities only. Unclassified excavation, borrow excavation, shoulder borrow, fine grading, clearing and grubbing, breaking of existing pavement and removal of existing pavement will be paid for at the lump sum price for "Grading".

Station L	Uncl. Exc. (cu. yd.)	Embt (cu. yd.)
17+50.23	0	0
17+65.35	3	10
18+00.00	8	69
18+20.84	0	58
18+36.97	0	27
18+65.00	1	17
18+83.63	0	9
19+00.00	0	5
19+50.00	2	11
20+00.00	2	6

Station Y	Uncl. Exc. (cu. yd.)	Embt (cu. yd.)
10+20.00	0	0
10+28.76	0	26
10+36.34	0	32
10+51.53	0	44
10+73.73	0	43
11+05.05	2	20

Station Y1	Uncl. Exc. (cu. yd.)	Embt (cu. yd.)
10+12.25	0	0
10+21.30	3	0
10+36.37	4	0
10+50.00	3	0
10+88.42	5	1
11+00.00	1	0

Station Y1	Uncl. Exc. (cu. yd.)	Embt (cu. yd.)
11+46.41	0	0
11+58.69	0	110

0 5 10	PROJ. REFERENCE NO.	SHEET NO.
	B-4563	X-2

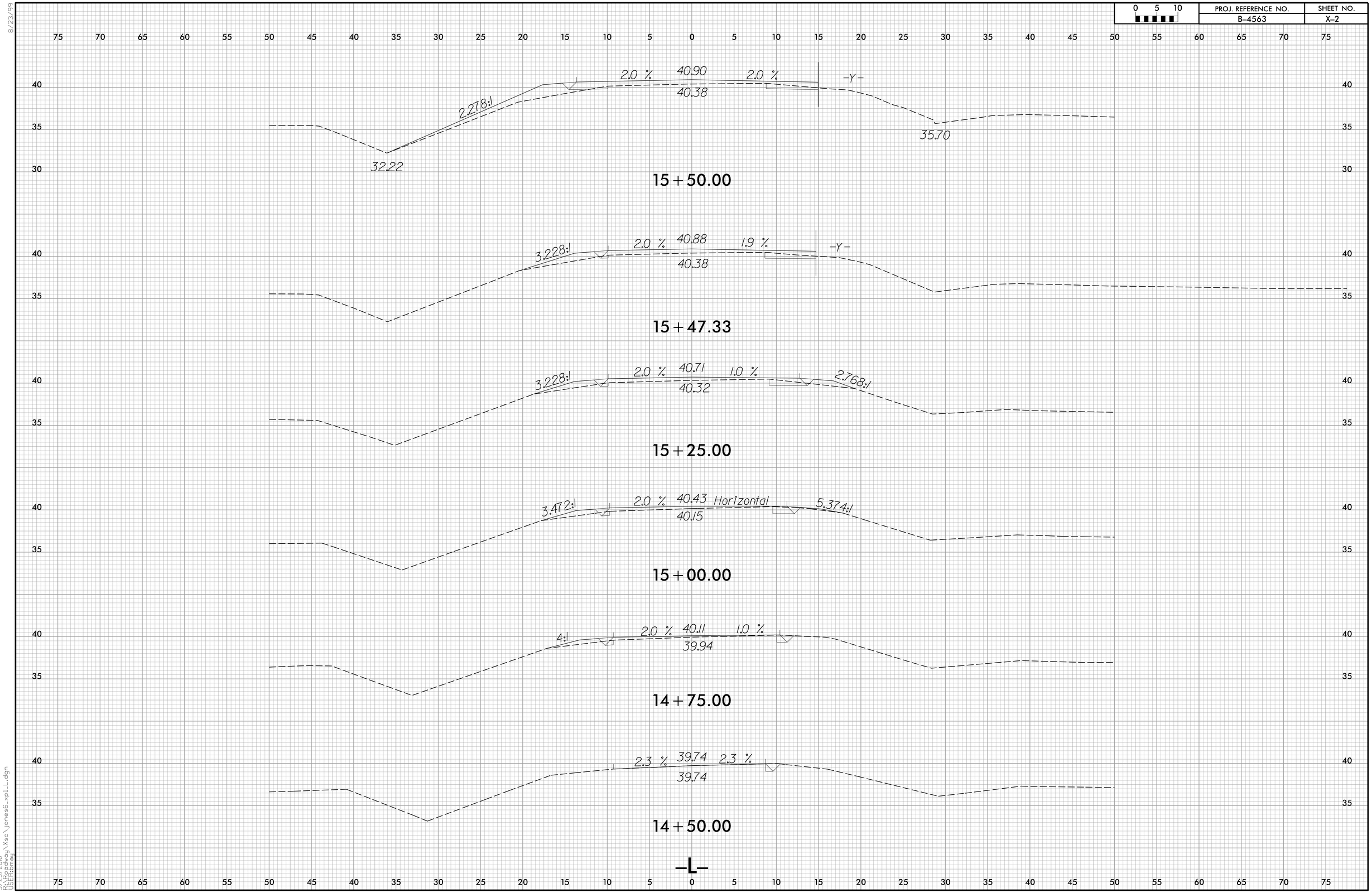

8/23/99

3/23/2018
R:\Roadway\Xsc\jones6_xp1_L.dgn
USER:bmay

0 5 10	PROJ. REFERENCE NO.	SHEET NO.
	B-4563	X-3

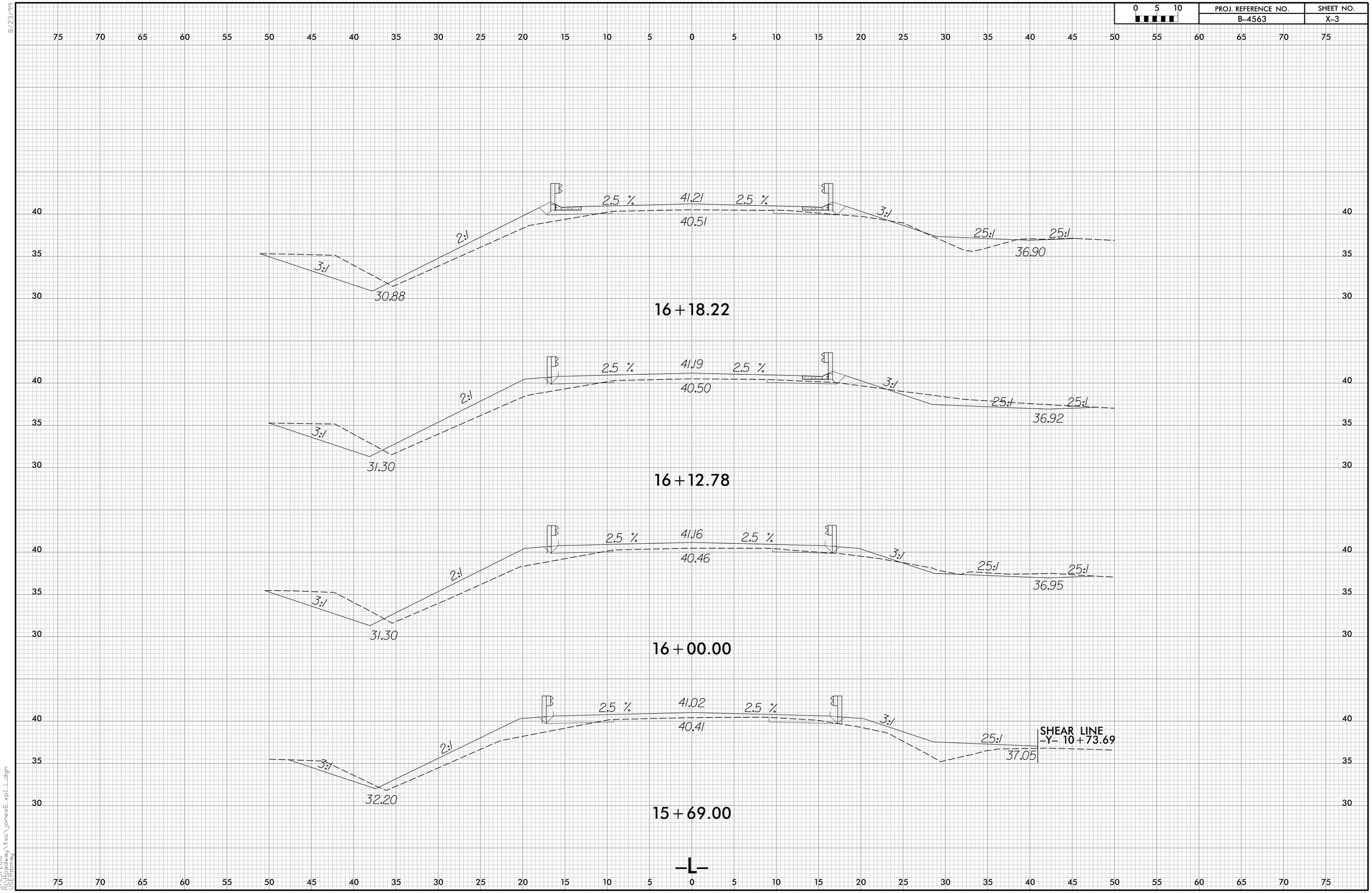

8/23/99

3/23/2018
R:\Roadway\Xsc\jones6_xpl1_l.dgn
USER:ramay

0 5 10	PROJ. REFERENCE NO.	SHEET NO.
	B-4563	X-4

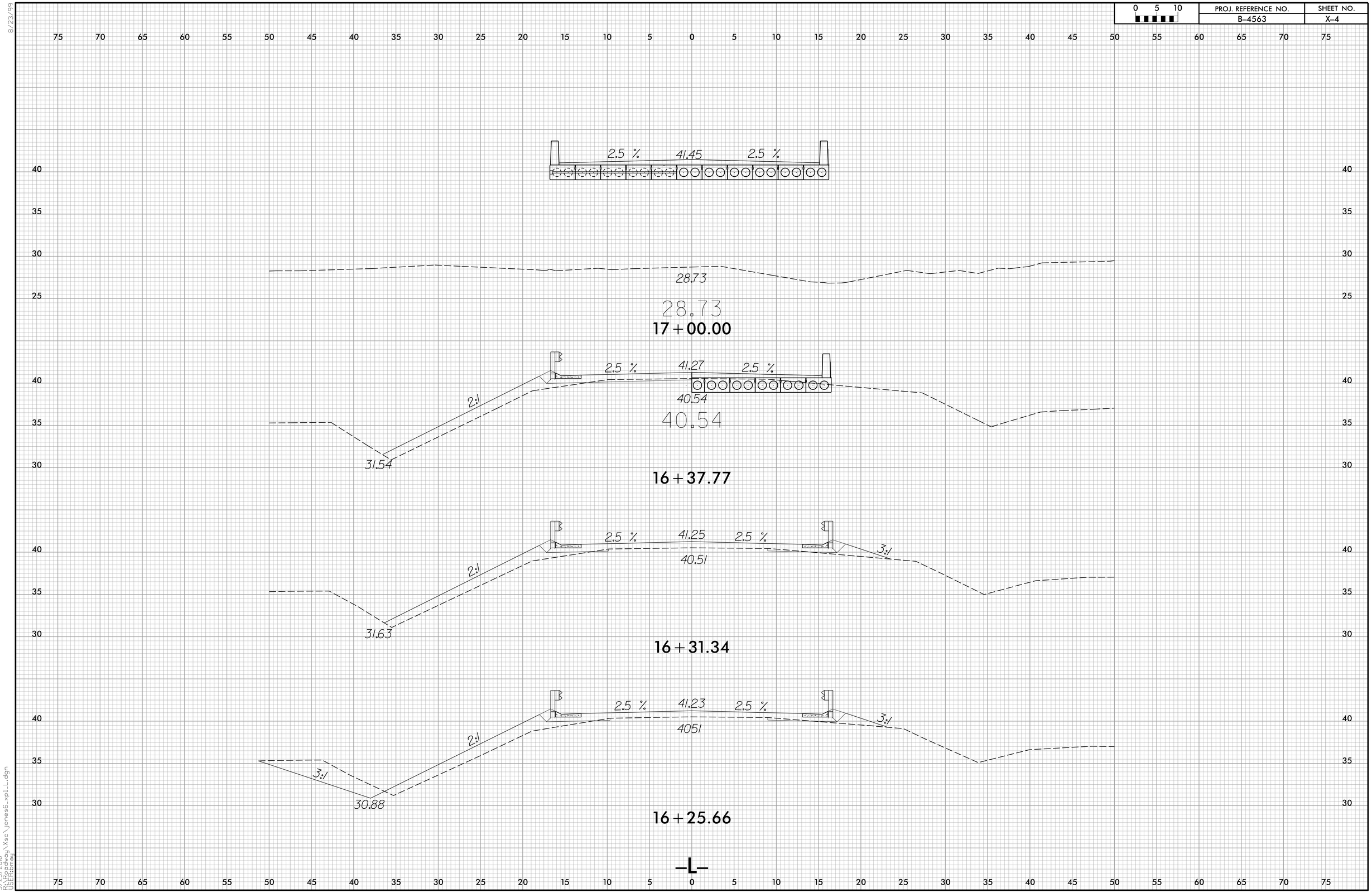

8/23/99

3/23/2018
R:\Roadway\Xsc\jones6_xpl_L.dgn
USER:bmay

0 5 10	PROJ. REFERENCE NO.	SHEET NO.
	B-4563	X-5

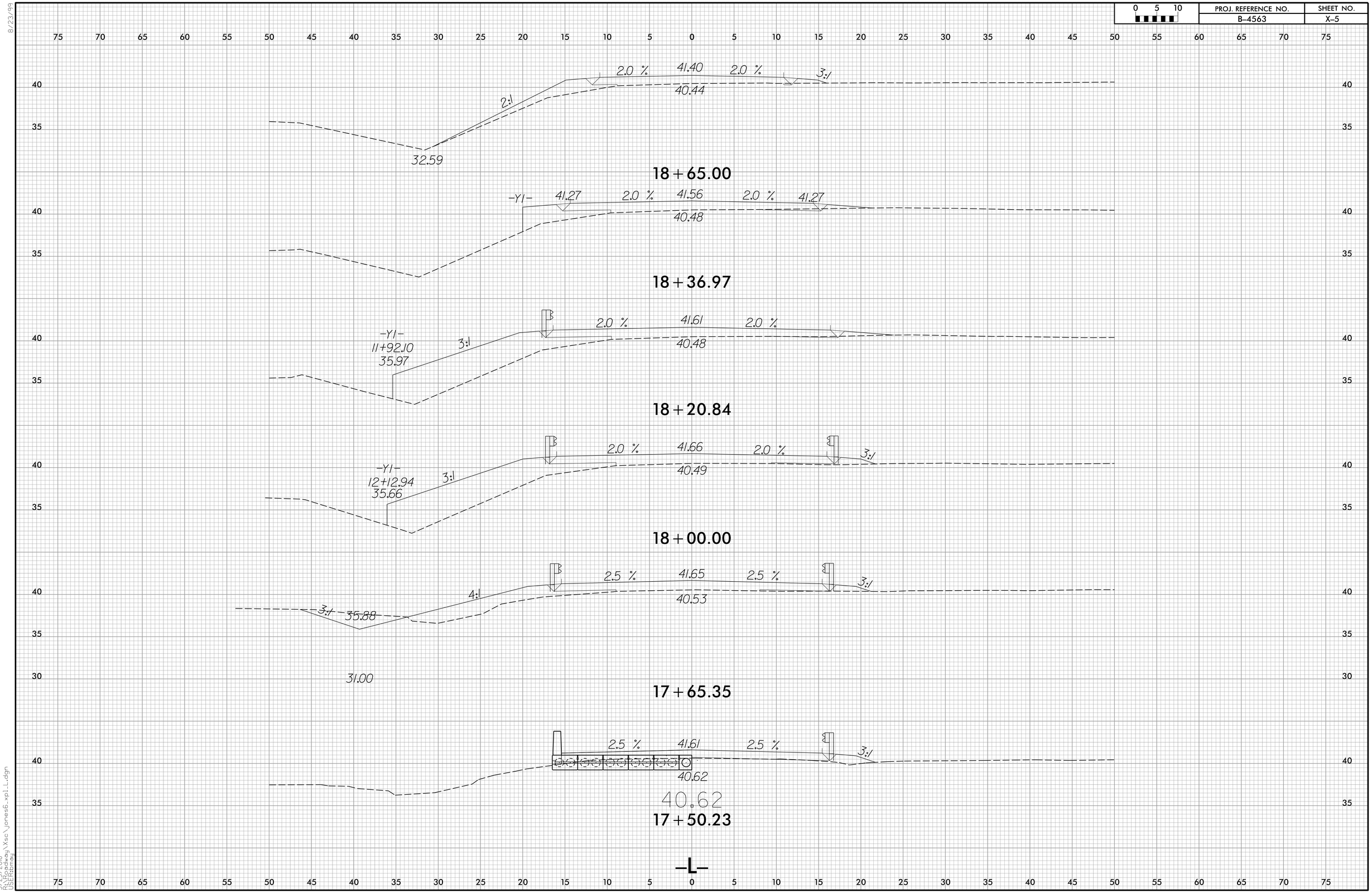

8/23/99

3/23/2018
R:\Projects\Hwy\Xsc\jones6_xp1_L.dgn
USER:bmay

0 5 10	PROJ. REFERENCE NO.	SHEET NO.
	B-4563	X-6

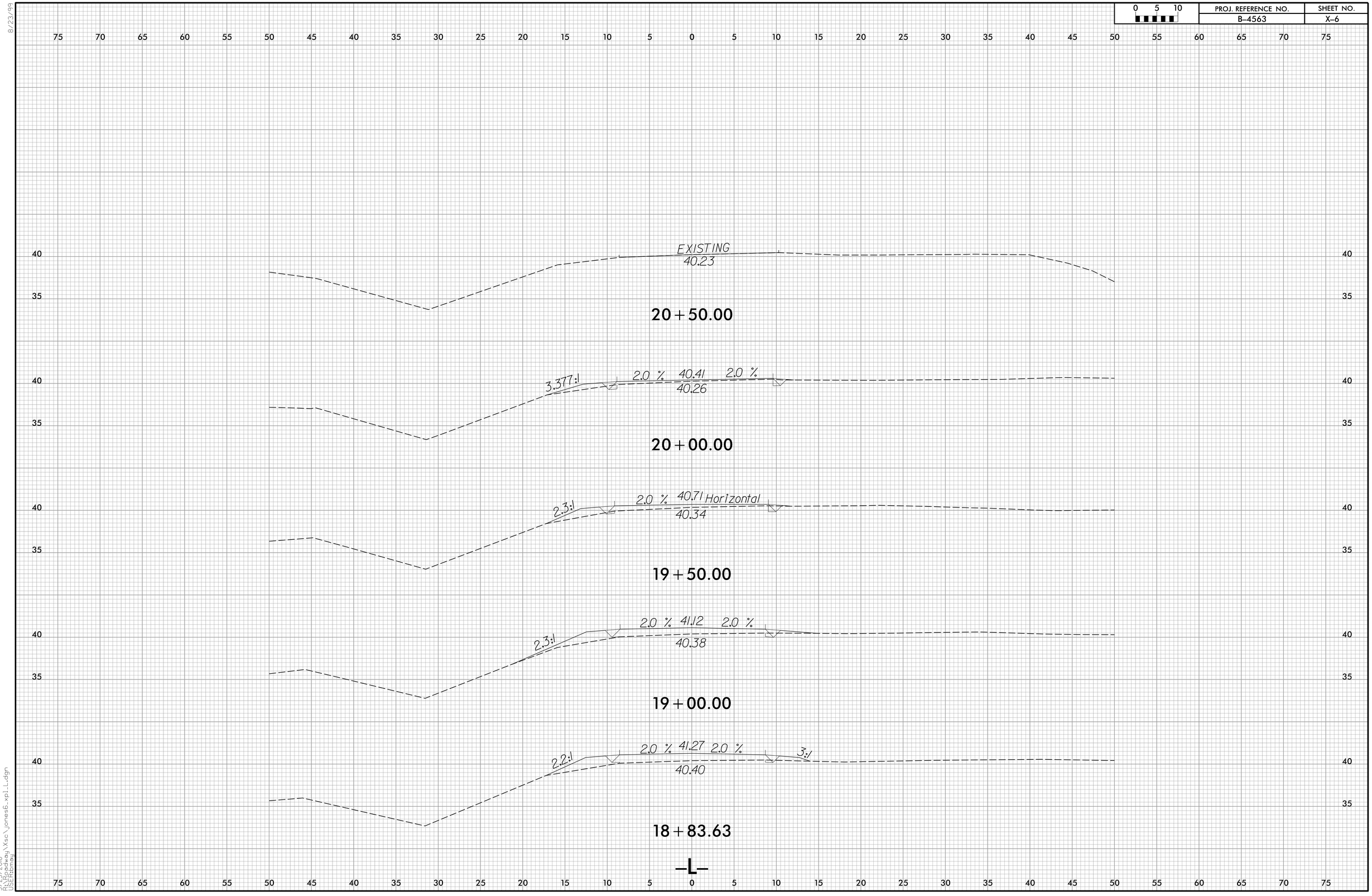

8/23/99

3/23/2018
R:\Roadway\Xsc\jones6_xp1_L.dgn
USER:bmay

0 5 10	PROJ. REFERENCE NO.	SHEET NO.
	B-4563	X-7

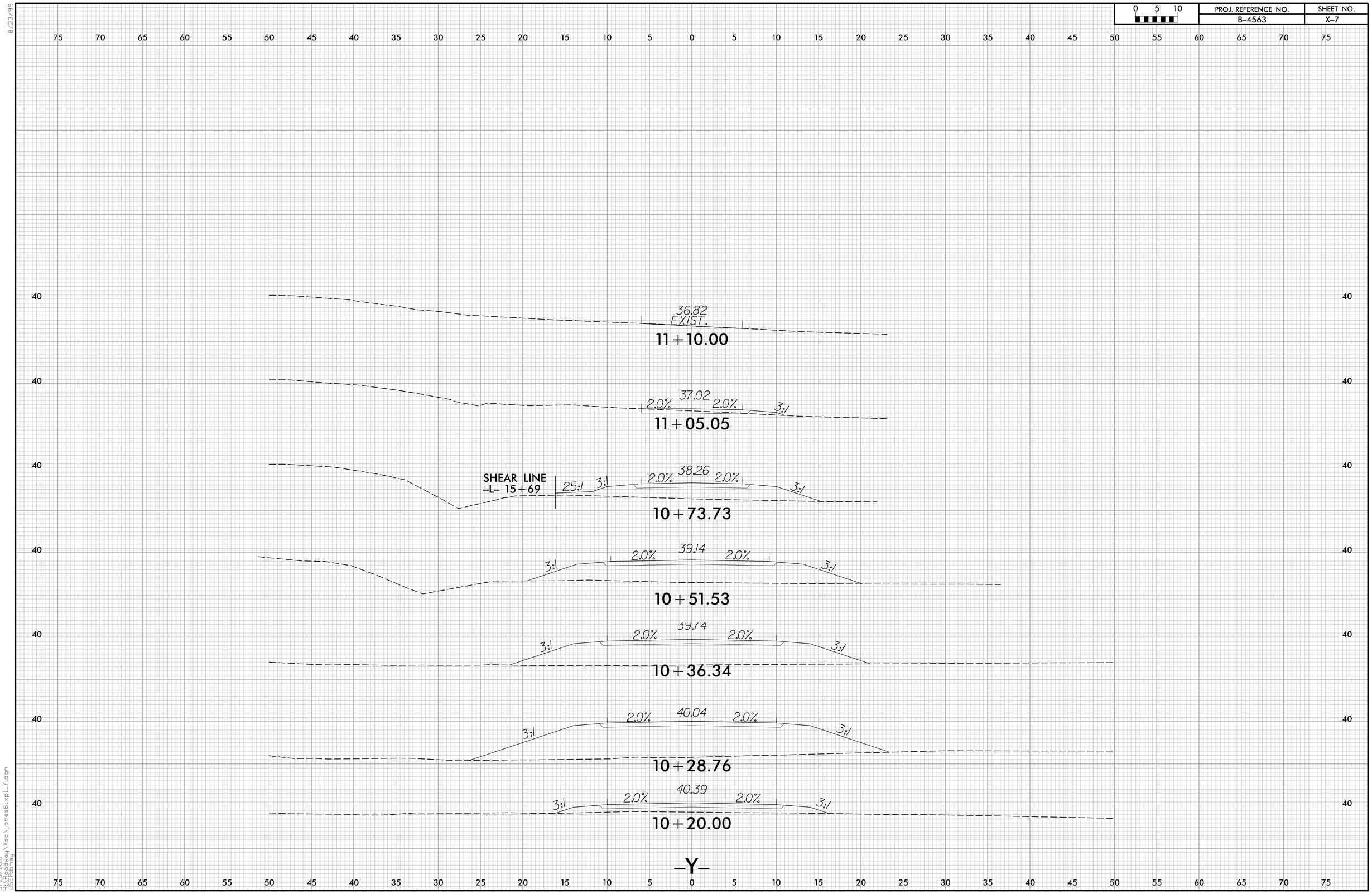

8/23/99

3/23/2018
R:\Roadway\Xsc\jones6_xpl_Y.dgn
USER:bmay

0 5 10	PROJ. REFERENCE NO.	SHEET NO.
	B-4563	X-8

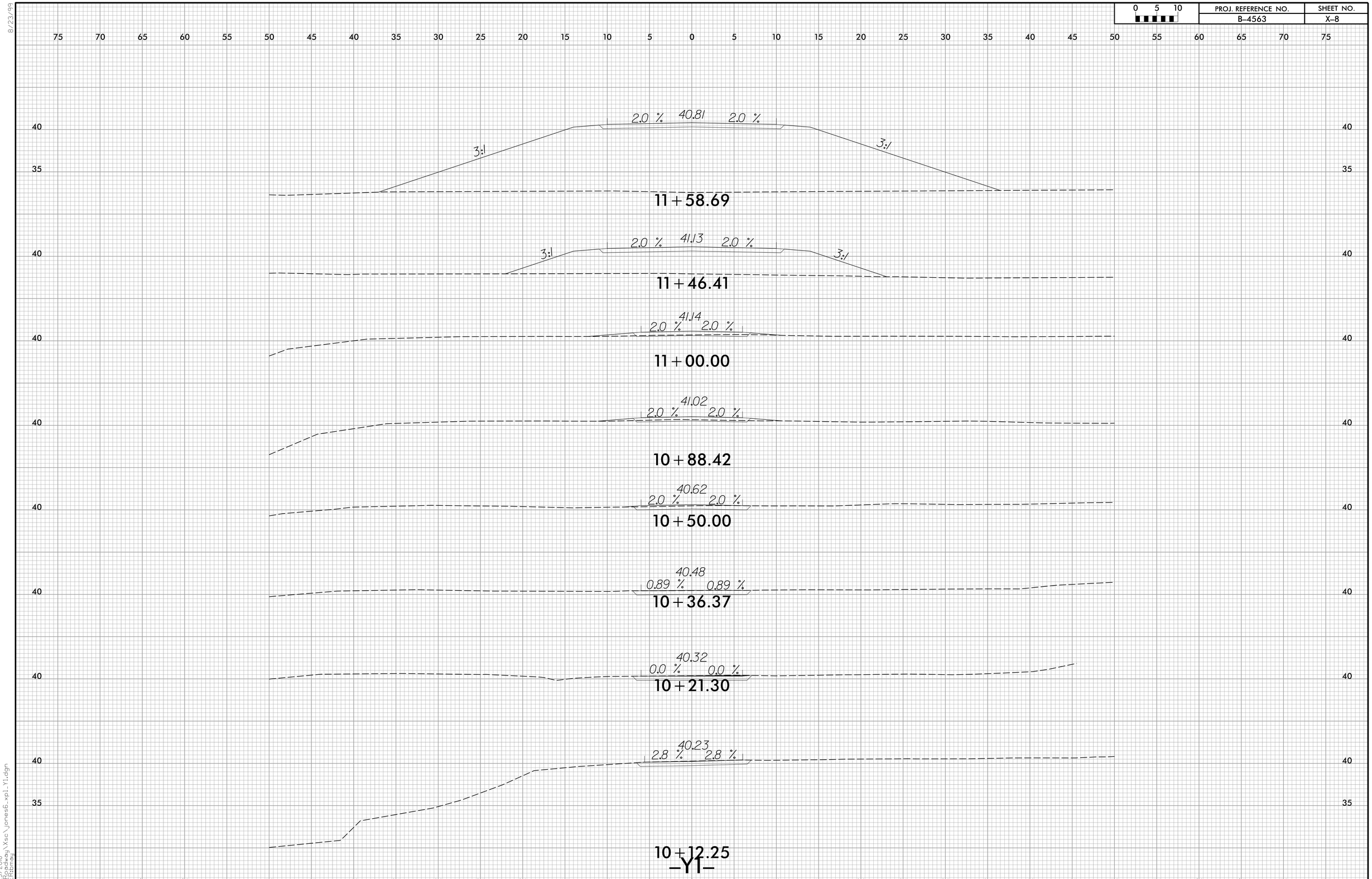

8/23/99

3/23/2018
...\Roadway\Xsc\jones6_xpl_Y1.dgn
USER:rbmay

0 5 10	PROJ. REFERENCE NO.	SHEET NO.
	B-4563	X-9

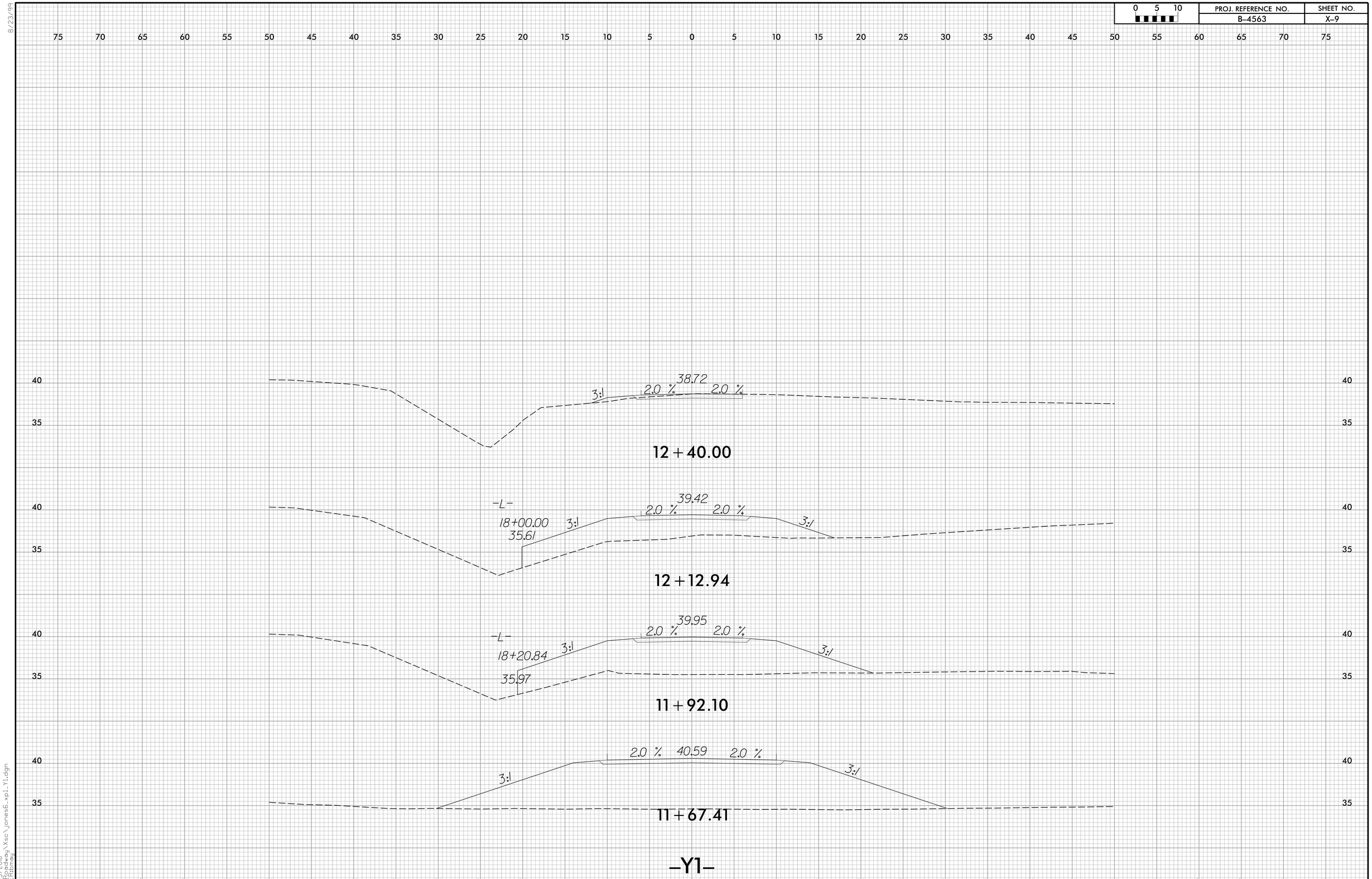

8/23/99

3/23/2018
...\Roadway\Xsc\jones6_xpl_Y1.dgn
USER:rbray

TIP PROJECT: B-4563

CONTRACT: DB00397

STATE	STATE PROJECT REFERENCE NO.	SHEET NO.	TOTAL SHEETS
N.C.	B-4563		

STATE PROJ. NO.	F.A. PROJ. NO.	DESCRIPTION
38411.1.2		PE
38411.2.1		R/W, UTIL.
38411.3.1		CONST

STATE OF NORTH CAROLINA
DIVISION OF HIGHWAYS

JONES COUNTY

LOCATION: BRIDGE #6 OVER BIG CHINQUAPIN CREEK ON SR 1301

TYPE OF WORK: BRIDGE REPLACEMENT, GUARDRAIL, PAVING, GRADING AND DRAINAGE

STRUCTURE PLANS

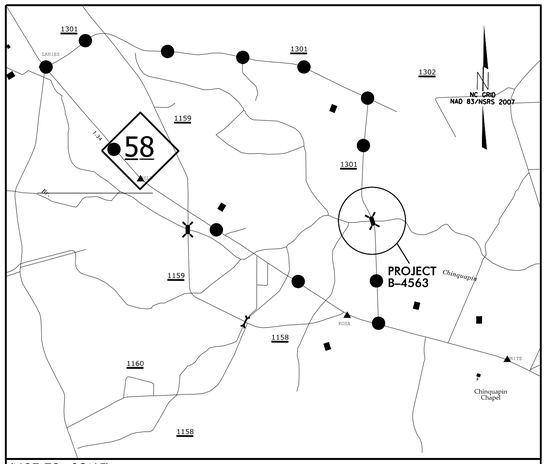

(NOT TO SCALE) VICINITY MAP

OFFSITE DETOUR

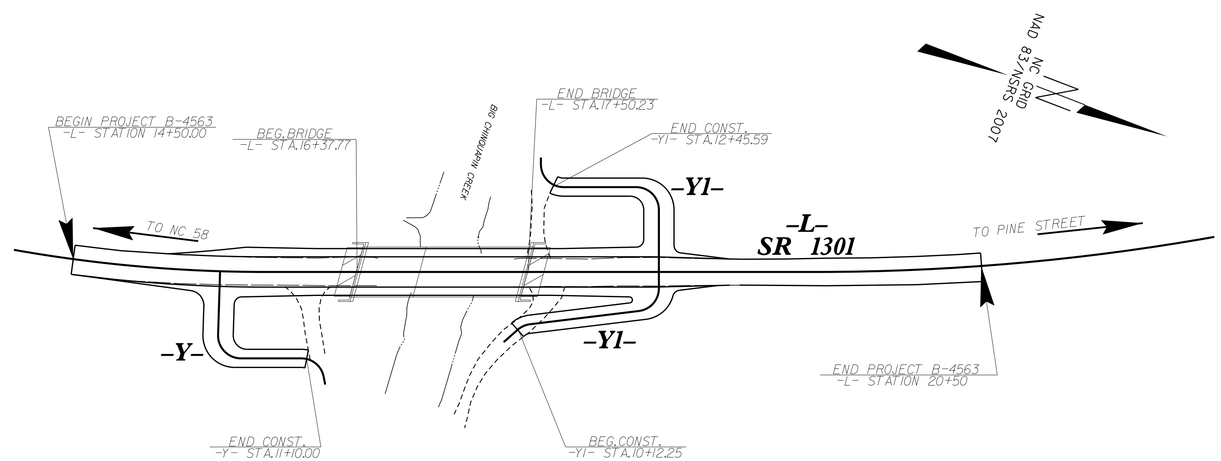

PROJECT LENGTH

LENGTH ROADWAY PROJECT B-4536 = 0.093 MILE
LENGTH STRUCTURE PROJECT B-4536 = .021 MILE
TOTAL LENGTH PROJECT B-4536 = 0.114 MILE

Prepared for the North Carolina Department of Transportation in the Office of:

WETHERILL ENGINEERING
1223 JONES FRANKLIN ROAD
Raleigh, N.C. 27606
License No. F-0377
Bus: 919 851 8077
Fax: 919 851 8107

2018 STANDARD SPECIFICATIONS

LETTING DATE: MAY 2018

NCDOT CONTACT:

EDWARD G. WETHERILL, PE
PROJECT ENGINEER

B.C. HUNT, P.E.
PROJECT DESIGN ENGINEER

LANG JONES
DIVISION 2 DDC CONTACT

STATE OF NORTH CAROLINA • DEPARTMENT OF TRANSPORTATION

12/12/2017
10:09:57 AM
P:\2017\17417.01_B-4563\Structures\DGN\B-4563 JONES 6_TSH.dgn

09/08/69

DocuSign Envelope ID: 37A8D76B-11E1-4FB9-9AFC-E0CBC84ACAB3

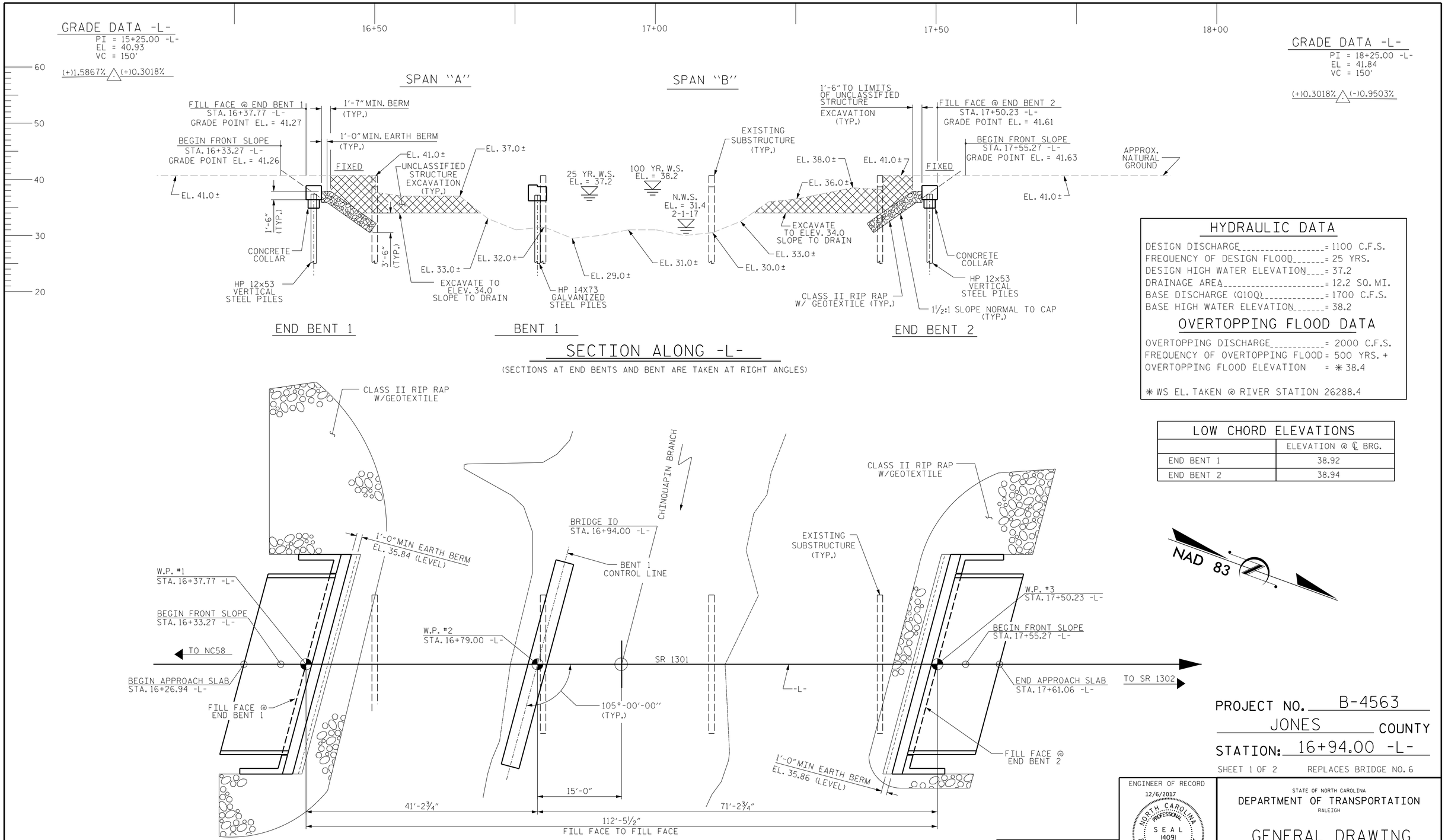

HYDRAULIC DATA

DESIGN DISCHARGE	= 1100 C.F.S.
FREQUENCY OF DESIGN FLOOD	= 25 YRS.
DESIGN HIGH WATER ELEVATION	= 37.2
DRAINAGE AREA	= 12.2 SQ. MI.
BASE DISCHARGE (Q100)	= 1700 C.F.S.
BASE HIGH WATER ELEVATION	= 38.2

OVERTOPPING FLOOD DATA

OVERTOPPING DISCHARGE	= 2000 C.F.S.
FREQUENCY OF OVERTOPPING FLOOD	= 500 YRS. +
OVERTOPPING FLOOD ELEVATION	= ✳ 38.4

✳ WS EL. TAKEN @ RIVER STATION 26288.4

LOW CHORD ELEVATIONS

	ELEVATION @ ℄ BRG.
END BENT 1	38.92
END BENT 2	38.94

PROJECT NO. B-4563

JONES COUNTY

STATION: 16+94.00 -L-

SHEET 1 OF 2 REPLACES BRIDGE NO. 6

ENGINEER OF RECORD
12/6/2017
NORTH CAROLINA PROFESSIONAL SEAL 14091 ENGINEER BUCK CHARLES HUNT

Docusigned by: Buck Charles Hunt
2F15CB3973BA4EC...

WETHERILL ENGINEERING
1223 Jones Franklin Rd.
Raleigh, N.C. 27606
Bus: 919 851 8077
Fax: 919 851 8107
LICENSE NO. F-0377

I HEREBY CERTIFY THESE PLANS ARE THE AS-BUILT PLANS

DOCUMENT NOT CONSIDERED FINAL UNLESS ALL SIGNATURES COMPLETED

STATE OF NORTH CAROLINA
DEPARTMENT OF TRANSPORTATION
RALEIGH

GENERAL DRAWING
BRIDGE ON SR 1301
OVER CHINQUAPIN BRANCH
BETWEEN NC 58 AND SR 1302

REVISIONS								SHEET NO.
NO.	BY:	DATE:	NO.	BY:	DATE:			S-1
1			3					TOTAL SHEETS
2			4					19

DRAWN BY : M. SPARTZ DATE : 6/17
CHECKED BY : B.C. HUNT DATE : 6/17

P:\2017\17147.01_B-4563\Structures\DGN\B-4563 JONES 6_GD.dgn
12/5/2017 1:28:04 PM

DocuSign Envelope ID: 37A8D76B-11E1-4FB9-9AFC-E0CBC84ACAB3

BM1: STA. 14+42 -L-, OFF SET 16.0' RT, EL. 39.21, ALUMINUM CAP BURIED APPROXIMATELY 3" IN THE GROUND (CP#12), N 496562 E 2455038

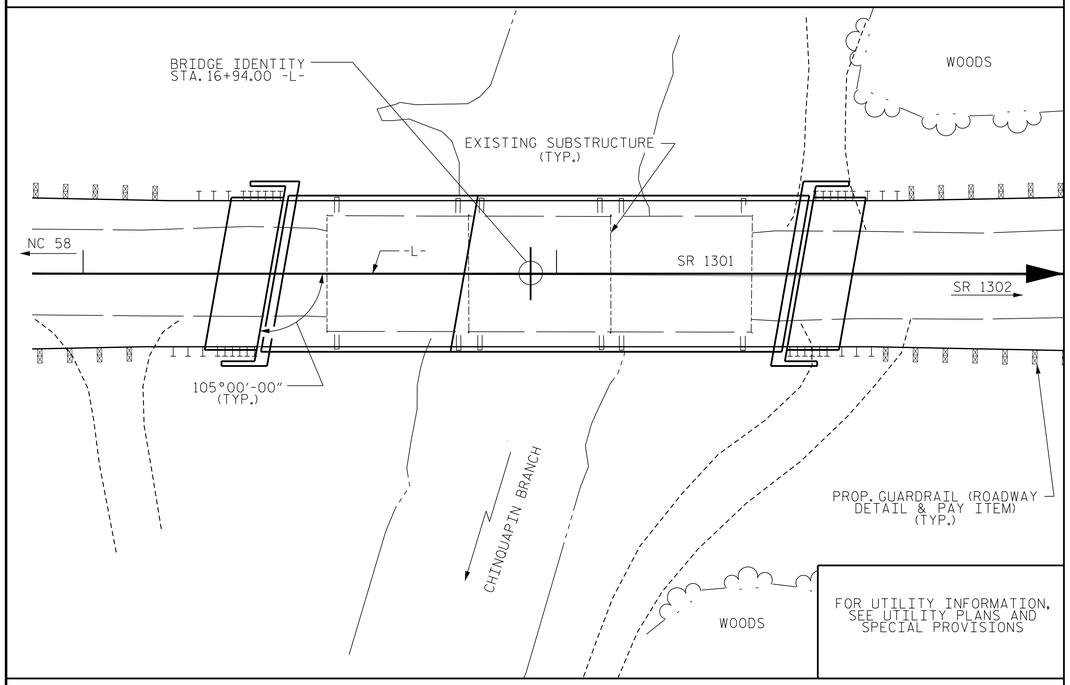

LOCATION SKETCH

NOTES:

ASSUMED LIVE LOAD = HL-93 OR ALTERNATE LOADING.

THIS BRIDGE HAS BEEN DESIGNED IN ACCORDANCE WITH THE AASHTO LRFD BRIDGE DESIGN SPECIFICATIONS.

THIS BRIDGE IS LOCATED IN SEISMIC ZONE 1.

FOR OTHER DESIGN DATA AND GENERAL NOTES, SEE SHEET SN.

FOR SUBMITTAL OF WORKING DRAWINGS, SEE SPECIAL PROVISIONS.

FOR FALSEWORK AND FORMWORK, SEE SPECIAL PROVISIONS.

FOR CRANE SAFETY, SEE SPECIAL PROVISIONS.

FOR GROUT FOR STRUCTURES, SEE SPECIAL PROVISIONS.

THE MATERIAL SHOWN IN THE CROSS-HATCHED AREA ON SHEET S-1 SHALL BE EXCAVATED FOR A DISTANCE OF 30 FT. EACH SIDE OF CENTERLINE ROADWAY AS DIRECTED BY THE ENGINEER. THIS WORK WILL BE PAID FOR AT THE CONTRACT LUMP SUM PRICE FOR UNCLASSIFIED STRUCTURE EXCAVATION. SEE SECTION 412 OF THE STANDARD SPECIFICATIONS.

THE EXISTING STRUCTURE CONSISTING OF 3 SPANS (1 @ 30'-4", 1 @ 30'-0", AND 1 @ 30'-4") WITH A CLEAR ROADWAY WITDTH OF 24'-3" AND HAVING A SUPERSTRUCTURE CONSISTING OF PRESTRESSED CONCRETE CHANNELS AND A SUBSTRUCTURE OF CONCRETE CAPS AND TIMBER PILES WITH STEEL CRUTCH BENTS SHALL BE REMOVED. THE EXISTING STRUCTURE IS CURRENTLY POSTED FOR LOAD LIMITS.

THE SUBSTRUCTURE OF THE EXISTING BRIDGE INDICATED ON THE PLANS IS FROM THE BEST INFORMATION AVAILABLE. SINCE THIS INFORMATION IS SHOWN FOR THE CONVENIENCE OF THE CONTRACTOR, THE CONTRACTOR SHALL HAVE NO CLAIM WHATSOEVER AGAINST THE DEPARTMENT OF TRANSPORTATION FOR ANY DELAYS OR ADDITIONAL COST INCURRED BASED ON DIFFERENCE BETWEEN THE EXISTING BRIDGE SUBSTRUCTURE SHOWN ON THE PLANS AND THE ACTUAL CONDITIONS AT THE PROJECT SITE.

REMOVAL OF THE EXISTING BRIDGE SHALL BE PERFORMED SO AS NOT TO ALLOW DEBRIS TO FALL INTO THE WATER. THE CONTRACTOR SHALL REMOVE THE BRIDGE AND SUBMIT PLANS FOR DEMOLITION IN ACCORDANCE WITH ARTICLE 402-2 OF THE STANDARD SPECIFICATIONS.

THIS STRUCTURE HAS BEEN DESIGNED IN ACCORDANCE WITH "HEC 18-EVALUATING SCOUR AT BRIDGES".

FOR EROSION CONTROL MEASURES, SEE EROSION CONTROL PLANS.

ASPHALT WEARING SURFACE IS INCLUDED IN ROADWAY QUANTITY ON ROADWAY PLANS.

FOR ASBESTOS ASSESSMENT FOR BRIDGE DEMOLITION AND RENOVATION ACTIVITIES, SEE SPECIAL PROVISIONS.

AT THE CONTRACTOR'S OPTION, PRESTRESSED CONCRETE END BENT AND BENT CAPS MAY BE SUBSTITUTED IN PLACE OF THE CAST-IN -PLACE CAPS. THE CONTRACTOR SHALL COORDINATE WITH THE RESIDENT ENGINEER TO RECEIVE REVISED PLANS AND DETAILS FROM THE STRUCTURES MANAGEMENT UNIT. THE REDESIGN AND ANY ADDITIONAL MATERIALS NEEDED WILL BE AT NO ADDITIONAL COST TO THE CONTRACTOR.

FOR INTERIOR BENT No. 1, ONLY PARTIAL GALVANIZING OF THE PILES IS REQUIRED. SEE INTERIOR BENT SHEET(S) FOR REQUIRED GALVANIZED LENGTHS. PAYMENT FOR PARTIALLY GALVANIZED PILES WILL BE MADE UNDER THE CONTRACT UNIT PRICE FOR GALVANIZED STEEL PILES.

TOTAL BILL OF MATERIAL

	REMOVAL OF EXISTING STRUCTURE	PDA TESTING	UNCLASSIFIED STRUCTURE EXCAVATION	CLASS A CONCRETE	BRIDGE APPROACH SLABS	REINFORCING STEEL	PILE DRIVING EQUIPMENT SETUP FOR HP 12 x 53 STEEL PILES	PILE DRIVING EQUIPMENT SETUP FOR HP 14 x 73 GALVANIZED STEEL PILES	HP 12 x 53 STEEL PILES		HP 14 x 73 GALVANIZED STEEL PILES		PILE REDRIVES	VERTICAL CONCRETE BARRIER RAIL	RIP RAP CLASS II (2'-0" THICK)	GEOTEXTILE FOR DRAINAGE	ELASTOMERIC BEARINGS	3'-0" X 1'-9" PRESTRESSED CONCRETE CORED SLABS		3'-0" X 2'-0" PRESTRESSED CONCRETE CORED SLABS		ASBESTOS ASSESSMENT
	LUMP SUM	EA.	LUMP SUM	CU. YDS.	LUMP SUM	LBS.	EA.	EA.	NO.	LIN. FT.	NO.	LIN. FT.	EACH	LIN. FT.	TONS	SQ. YD.	LUMP SUM	NO.	LIN. FT.	NO.	LIN. FT.	LUMP SUM
SUPERSTRUCTURE														220.51				11	440.00	11	770.00	
END BENT 1				14.5		2181	7		7	392			4		115	130						
BENT 1				12.0		2407		8			8	608	4									
END BENT 2				14.7		2181	7		7	427			4		60	65						
TOTAL	LUMP SUM	1	LUMP SUM	41.2	LUMP SUM	6769	14	8	14	819	8	608	12	220.51	175	195	LUMP SUM	11	440.00	11	770.00	LUMP SUM

FOUNDATION NOTES:

FOR PILES, SEE SECTION 450 OF STANDARD SPECIFICATIONS.

PILES AT END BENT 1 ARE DESIGNED FOR A FACTORED RESISTANCE OF 60 TONS PER PILE.

DRIVE PILES AT END BENT 1 TO A REQUIRED DRIVING RESISTANCE OF 100 TONS PER PILE.

PILES AT END BENT 2 ARE DESIGNED FOR A FACTORED RESISTANCE OF 85 TONS PER PILE.

DRIVE PILES AT END BENT 2 TO A REQUIRED DRIVING RESISTANCE OF 145 TONS PER PILE.

PILES AT BENT 1 ARE DESIGNED FOR A FACTORED RESISTANCE OF 120 TONS PER PILE.

DRIVE PILES AT BENT 1 TO A REQUIRED DRIVING RESISTANCE OF 200 TONS PER PILE.

INSTALL PILES AT BENT 1 TO A TIP ELEVATION NO HIGHER THAN 4.0.

THE SCOUR CRITICAL ELEVATION FOR BENT NO. 1 IS ELEVATION 22.0. SCOUR CRITICAL ELEVATIONS ARE USED TO MONITOR POSSIBLE SCOUR PROBLEMS DURING THE LIFE OF THE STRUCTURE.

TESTING PILES WITH THE PDA DURING DRIVING, RESTRIKING, OR REDRIVING MAY BE REQUIRED. THE ENGINEER WILL DETERMINE THE NEED FOR PDA TESTING. FOR PDA TESTING, SEE SECTION 450 OF THE STANDARD SPECIFICATIONS.

DRAWN BY : M. SPARTZ DATE : 6/17
CHECKED BY : B.C. HUNT DATE : 9/17

DOCUMENT NOT CONSIDERED FINAL UNLESS ALL SIGNATURES COMPLETED

ENGINEER OF RECORD
12/6/2017
NORTH CAROLINA PROFESSIONAL SEAL 14091 ENGINEER BUCK CHARLES HUNT
DocuSigned by: Buck Charles Hunt
2F15C8397B4AEC...

WETHERILL ENGINEERING
1223 Jones Franklin Rd.
Raleigh, N.C. 27606
Bus: 919 851 8077
Fax: 919 851 8107
LICENSE NO. F-0377

PROJECT NO. B-4563
JONES COUNTY
STATION: 16+94.00 -L-
SHEET 2 OF 2

STATE OF NORTH CAROLINA
DEPARTMENT OF TRANSPORTATION
RALEIGH

GENERAL DRAWING
BRIDGE ON SR 1301
OVER CHINQUAPIN BRANCH
BETWEEN NC 58 & SR 1302

REVISIONS						SHEET NO.
NO.	BY:	DATE:	NO.	BY:	DATE:	S-2
1			3			TOTAL SHEETS
2			4			19

P:\2017\17147.01_B-4563\Structures\DGN\B-4563 JONES 6_GD.dgn
12/5/2017 1:29:47 PM

DocuSign Envelope ID: 37A8D76B-11E1-4FB9-9AFC-E0CBC84ACAB3

LOAD AND RESISTANCE FACTOR RATING (LRFD) SUMMARY FOR PRESTRESSED CONCRETE GIRDERS

LEVEL		VEHICLE	WEIGHT (W) (TONS)	CONTROLLING LOAD RATING	MINIMUM RATING FACTORS (RF)	TONS = W X RF	STRENGTH I LIMIT STATE												SERVICE III LIMIT STATE						COMMENT NUMBER
								MOMENT					SHEAR							MOMENT					
							LIVELOAD FACTORS	DISTRIBUTION FACTORS (DF)	RATING FACTOR	SPAN	GIRDER LOCATION	DISTANCE FROM LEFT END OF SPAN (ft)	DISTRIBUTION FACTORS (DF)	RATING FACTOR	SPAN	GIRDER LOCATION	DISTANCE FROM LEFT END OF SPAN (ft)	LIVELOAD FACTORS	DISTRIBUTION FACTORS (DF)	RATING FACTOR	SPAN	GIRDER LOCATION	DISTANCE FROM LEFT END OF SPAN (ft)	
DESIGN LOAD RATING		HL-93(Inv)	N/A	1	1.573	--	1.75	0.274	1.78	40'	EL	19.482	0.620	1.60	40'	EL	1.948	0.80	0.274	**1.57**	40'	EL	**19.482**	
		HL-93(Opr)	N/A		2.078	--	1.35	0.274	2.31	40'	EL	19.482	0.620	2.08	40'	EL	1.948	N/A	--	--	--	--	--	
		HS-20(Inv)	36.000	2	1.873	67.422	1.75	0.274	2.23	40'	EL	19.482	0.620	**1.87**	40'	EL	**1.948**	0.80	0.274	1.96	40'	EL	19.482	
		HS-20(Opr)	36.000		2.428	87.4	1.35	0.274	2.90	40'	EL	19.482	0.620	2.43	40'	EL	1.948	N/A	--	--	--	--	--	
LEGAL LOAD RATING	SV	SNSH	13.500		3.642	49.163	1.4	0.274	5.16	40'	EL	19.482	0.620	4.80	40'	EL	7.793	0.80	0.274	3.64	40'	EL	19.482	
		SNGARBS2	20.000		2.995	59.897	1.4	0.274	4.24	40'	EL	15.586	0.620	3.65	40'	EL	7.793	0.80	0.274	2.99	40'	EL	19.482	
		SNAGRIS2	22.000		2.951	64.924	1.4	0.274	4.14	40'	EL	15.586	0.620	3.49	40'	EL	7.793	0.80	0.274	2.95	40'	EL	15.586	
		SNCOTTS3	27.250		1.82	49.605	1.4	0.274	2.58	40'	EL	19.482	0.620	2.42	40'	EL	7.793	0.80	0.274	1.82	40'	EL	19.482	
		SNAGGRS4	34.925		1.639	57.231	1.4	0.274	2.32	40'	EL	19.482	0.620	2.18	40'	EL	7.793	0.80	0.274	1.64	40'	EL	19.482	
		SNS5A	35.550		1.594	56.664	1.4	0.274	2.26	40'	EL	19.482	0.620	2.30	40'	EL	7.793	0.80	0.274	1.59	40'	EL	19.482	
		SNS6A	39.950		1.517	60.592	1.4	0.274	2.15	40'	EL	19.482	0.620	2.16	40'	EL	1.948	0.80	0.274	1.52	40'	EL	19.482	
		SNS7B	42.000	3	1.446	60.751	1.4	0.274	2.05	40'	EL	19.482	0.620	2.20	40'	EL	1.948	0.80	0.274	**1.45**	40'	EL	**19.482**	
	TTST	TNAGRIT3	33.000		1.866	61.588	1.4	0.274	2.65	40'	EL	19.482	0.620	2.52	40'	EL	1.948	0.80	0.274	1.87	40'	EL	19.482	
		TNT4A	33.075		1.89	62.524	1.4	0.274	2.68	40'	EL	19.482	0.620	2.38	40'	EL	7.793	0.80	0.274	1.89	40'	EL	19.482	
		TNT6A	41.600		1.603	66.702	1.4	0.274	2.27	40'	EL	19.482	0.620	2.34	40'	EL	7.793	0.80	0.274	1.60	40'	EL	19.482	
		TNT7A	42.000		1.644	69.051	1.4	0.274	2.33	40'	EL	19.482	0.620	2.17	40'	EL	1.948	0.80	0.274	1.64	40'	EL	19.482	
		TNT7B	42.000		1.681	70.584	1.4	0.274	2.38	40'	EL	19.482	0.620	2.09	40'	EL	1.948	0.80	0.274	1.68	40'	EL	19.482	
		TNAGRIT4	43.000		1.635	70.321	1.4	0.274	2.31	40'	EL	15.586	0.620	2.00	40'	EL	1.948	0.80	0.274	1.64	40'	EL	19.482	
		TNAGT5A	45.000		1.513	68.098	1.4	0.274	2.14	40'	EL	19.482	0.620	2.08	40'	EL	1.948	0.80	0.274	1.51	40'	EL	19.482	
		TNAGT5B	45.000		1.47	66.159	1.4	0.274	2.08	40'	EL	19.482	0.620	1.90	40'	EL	1.948	0.80	0.274	1.47	40'	EL	19.482	

LOAD FACTORS:

DESIGN LOAD RATING FACTORS	LIMIT STATE	γ_{DC}	γ_{DW}
	STRENGTH I	1.25	1.50
	SERVICE III	1.00	1.00

NOTES:

MINIMUM RATING FACTORS ARE BASED ON THE STRENGTH I AND SERVICE III LIMIT STATES.

ALLOWABLE STRESSES FOR SERVICE III LIMIT STATE ARE AS REQUIRED FOR DESIGN.

COMMENTS:

1.
2.
3.
4.

CONTROLLING LOAD RATING

1 DESIGN LOAD RATING (HL-93)
2 DESIGN LOAD RATING (HS-20)
3 LEGAL LOAD RATING **
** SEE CHART FOR VEHICLE TYPE

GIRDER LOCATION

I - INTERIOR GIRDER
EL - EXTERIOR LEFT GIRDER
ER - EXTERIOR RIGHT GIRDER

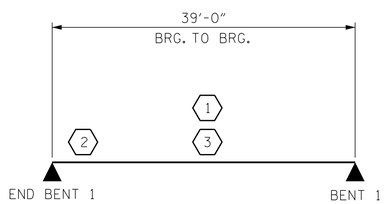

LRFR SUMMARY

FOR SPAN 'A'

PROJECT NO. B-4563
JONES COUNTY
STATION: 16+94.00 -L-

SHEET 1 OF 2

ASSEMBLED BY : M. SPARTZ DATE : 6/17
CHECKED BY : G.M. GILLAND DATE : 7/17
DRAWN BY : CVC 6/10
CHECKED BY : DNS 6/10

DOCUMENT NOT CONSIDERED FINAL UNLESS ALL SIGNATURES COMPLETED

ENGINEER OF RECORD
12/6/2017
NORTH CAROLINA PROFESSIONAL SEAL 14091 ENGINEER BUCK CHARLES HUNT
DocuSigned by: Buck Charles Hunt
2F15C83973BA4EC...
ETHERILL ENGINEERING
1223 Jones Franklin Rd.
Raleigh, N.C. 27606
Bus: 919 851 8077
Fax: 919 851 8107
LICENSE NO. F-0377

STATE OF NORTH CAROLINA
DEPARTMENT OF TRANSPORTATION
RALEIGH

STANDARD
LRFR SUMMARY FOR
40' CORED SLAB UNIT
105° SKEW
SPAN A
(NON-INTERSTATE TRAFFIC)

REVISIONS						SHEET NO.
NO.	BY:	DATE:	NO.	BY:	DATE:	S-3
1			3			TOTAL SHEETS
2			4			19

STD. NO. 21LRFR1_75&105S_40L

P:\2017\17147.01_B-4563\Structures\DGN\B-4563 JONES 6_LRF.dgn
12/5/2017 1:32:00 PM

DocuSign Envelope ID: 37A8D76B-11E1-4FB9-9AFC-E0CBC84ACAB3

LOAD AND RESISTANCE FACTOR RATING (LRFD) SUMMARY FOR PRESTRESSED CONCRETE GIRDERS

LEVEL		VEHICLE	WEIGHT (W) (TONS)	CONTROLLING LOAD RATING	MINIMUM RATING FACTORS (RF)	TONS = W X RF	STRENGTH I LIMIT STATE											SERVICE III LIMIT STATE						COMMENT NUMBER
								MOMENT					SHEAR						MOMENT					
							LIVELOAD FACTORS	DISTRIBUTION FACTORS (DF)	RATING FACTOR	SPAN	GIRDER LOCATION	DISTANCE FROM LEFT END OF SPAN (ft)	DISTRIBUTION FACTORS (DF)	RATING FACTOR	SPAN	GIRDER LOCATION	DISTANCE FROM LEFT END OF SPAN (ft)	LIVELOAD FACTORS	DISTRIBUTION FACTORS (DF)	RATING FACTOR	SPAN	GIRDER LOCATION	DISTANCE FROM LEFT END OF SPAN (ft)	
DESIGN LOAD RATING		HL-93(Inv)	N/A	1	1.014	--	1.75	0.269	1.04	70'	EL	34.482	0.608	1.1	70'	EL	3.448	0.80	0.269	**1.01**	70'	EL	**34.482**	
		HL-93(Opr)	N/A		1.355	--	1.35	0.269	1.35	70'	EL	34.482	0.608	1.43	70'	EL	3.448	N/A	--	--	--	--	--	
		HS-20(Inv)	36.000	2	1.315	47.356	1.75	0.269	1.36	70'	EL	34.482	0.608	1.38	70'	EL	3.448	0.80	0.269	**1.32**	70'	EL	**34.482**	
		HS-20(Opr)	36.000		1.757	63.236	1.35	0.269	1.76	70'	EL	34.482	0.608	1.79	70'	EL	3.448	N/A	--	--	--	--	--	
LEGAL LOAD RATING	SV	SNSH	13.500		2.938	39.656	1.4	0.269	3.78	70'	EL	34.482	0.608	4.12	70'	EL	3.448	0.80	0.269	2.94	70'	EL	34.482	
		SNGARBS2	20.000		2.203	44.052	1.4	0.269	2.84	70'	EL	34.482	0.608	2.93	70'	EL	3.448	0.80	0.269	2.2	70'	EL	34.482	
		SNAGRIS2	22.000		2.092	46.016	1.4	0.269	2.69	70'	EL	34.482	0.608	2.72	70'	EL	3.448	0.80	0.269	2.09	70'	EL	34.482	
		SNCOTTS3	27.250		1.462	39.844	1.4	0.269	1.88	70'	EL	34.482	0.608	2.06	70'	EL	3.448	0.80	0.269	1.46	70'	EL	34.482	
		SNAGGRS4	34.925		1.227	42.856	1.4	0.269	1.58	70'	EL	34.482	0.608	1.71	70'	EL	3.448	0.80	0.269	1.23	70'	EL	34.482	
		SNS5A	35.550		1.2	42.646	1.4	0.269	1.54	70'	EL	34.482	0.608	1.73	70'	EL	3.448	0.80	0.269	1.2	70'	EL	34.482	
		SNS6A	39.950		1.103	44.058	1.4	0.269	1.42	70'	EL	34.482	0.608	1.58	70'	EL	3.448	0.80	0.269	1.1	70'	EL	34.482	
		SNS7B	42.000		1.05	44.113	1.4	0.269	1.35	70'	EL	34.482	0.608	1.55	70'	EL	3.448	0.80	0.269	1.05	70'	EL	34.482	
	TTST	TNAGRIT3	33.000		1.345	44.401	1.4	0.269	1.73	70'	EL	34.482	0.608	1.88	70'	EL	3.448	0.80	0.269	1.35	70'	EL	34.482	
		TNT4A	33.075		1.352	44.717	1.4	0.269	1.74	70'	EL	34.482	0.608	1.83	70'	EL	3.448	0.80	0.269	1.35	70'	EL	34.482	
		TNT6A	41.600		1.108	46.073	1.4	0.269	1.43	70'	EL	34.482	0.608	1.65	70'	EL	3.448	0.80	0.269	1.11	70'	EL	34.482	
		TNT7A	42.000		1.114	46.794	1.4	0.269	1.43	70'	EL	34.482	0.608	1.62	70'	EL	3.448	0.80	0.269	1.11	70'	EL	34.482	
		TNT7B	42.000		1.155	48.526	1.4	0.269	1.49	70'	EL	34.482	0.608	1.51	70'	EL	3.448	0.80	0.269	1.16	70'	EL	34.482	
		TNAGRIT4	43.000		1.097	47.174	1.4	0.269	1.41	70'	EL	34.482	0.608	1.46	70'	EL	3.448	0.80	0.269	1.1	70'	EL	34.482	
		TNAGT5A	45.000		1.033	46.505	1.4	0.269	1.33	70'	EL	34.482	0.608	1.45	70'	EL	3.448	0.80	0.269	1.03	70'	EL	34.482	
		TNAGT5B	45.000	3	1.02	45.905	1.4	0.269	1.31	70'	EL	34.482	0.608	1.39	70'	EL	3.448	0.80	0.269	**1.02**	70'	EL	**34.482**	

LOAD FACTORS:

	LIMIT STATE	γ_{DC}	γ_{DW}
DESIGN LOAD RATING FACTORS	STRENGTH I	1.25	1.50
	SERVICE III	1.00	1.00

NOTES:

MINIMUM RATING FACTORS ARE BASED ON THE STRENGTH I AND SERVICE III LIMIT STATES.

ALLOWABLE STRESSES FOR SERVICE III LIMIT STATE ARE AS REQUIRED FOR DESIGN.

COMMENTS:

1.
2.
3.
4.

(#) CONTROLLING LOAD RATING

(1) DESIGN LOAD RATING (HL-93)

(2) DESIGN LOAD RATING (HS-20)

(3) LEGAL LOAD RATING **

** SEE CHART FOR VEHICLE TYPE

GIRDER LOCATION

I - INTERIOR GIRDER
EL - EXTERIOR LEFT GIRDER
ER - EXTERIOR RIGHT GIRDER

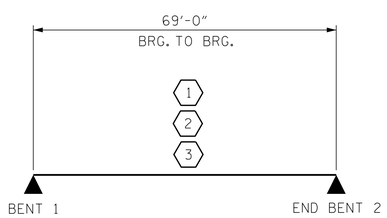

LRFR SUMMARY

FOR SPAN 'B'

PROJECT NO. B-4563

JONES COUNTY

STATION: 16+94.00 -L-

SHEET 2 OF 2

ENGINEER OF RECORD
12/6/2017
NORTH CAROLINA PROFESSIONAL SEAL 14091 ENGINEER BUCK CHARLES HUNT

DocuSigned by: Buck Charles Hunt
2F15C83973BA4EC...

WETHERILL ENGINEERING
1223 Jones Franklin Rd.
Raleigh, N.C. 27606
Bus: 919 851 8077
Fax: 919 851 8107
LICENSE NO. F-0377

STATE OF NORTH CAROLINA
DEPARTMENT OF TRANSPORTATION
RALEIGH

STANDARD
LRFR SUMMARY FOR
70' CORED SLAB UNIT
105° SKEW
SPAN B
(NON-INTERSTATE TRAFFIC)

REVISIONS						SHEET NO.
NO.	BY:	DATE:	NO.	BY:	DATE:	S-4
1			3			TOTAL SHEETS
2			4			19

DOCUMENT NOT CONSIDERED FINAL UNLESS ALL SIGNATURES COMPLETED

ASSEMBLED BY :	M. SPARTZ	DATE :	6/17
CHECKED BY :	G.M. GILLAND	DATE :	7/17
DRAWN BY : CVC	6/10		
CHECKED BY : DNS	6/10		

P:\2017\17147.01_B-4563\Structures\DGN\B-4563 JONES 6_LRF.dgn
12/5/2017 1:33:08 PM

STD. NO. 24LRFR1_75&105S_70L

DocuSign Envelope ID: 37A8D76B-11E1-4FB9-9AFC-E0CBC84ACAB3

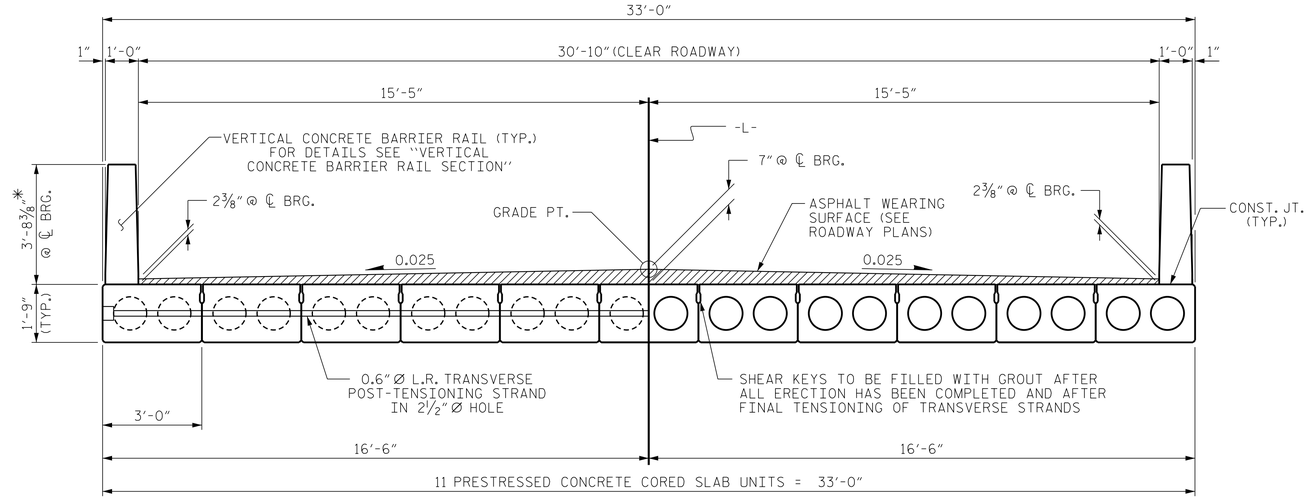

HALF SECTION
AT INTERMEDIATE DIAPHRAGMS

HALF SECTION
THROUGH VOIDS

TYPICAL SECTION

* - THE MAXIMUM BARRIER RAIL HEIGHT AND ASPHALT THICKNESS IS SHOWN. THE HEIGHT OF THE BARRIER RAIL AND ASPHALT THICKNESS VARIES WHILE THE TOP OF THE BARRIER RAIL FOLLOWS THE PROFILE OF THE GUTTERLINE. FOR RAIL HEIGHT DETAILS AND ASPHALT THICKNESS SEE THE "VERTICAL CONCRETE BARRIER RAIL SECTION" DETAIL.

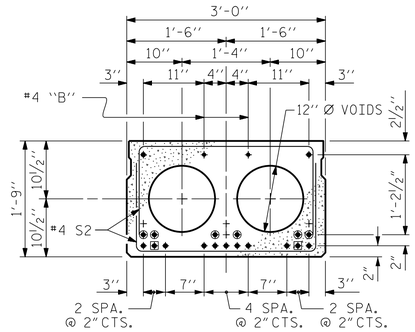

INTERIOR SLAB SECTION
(40' UNIT)
(13 STRANDS REQUIRED)

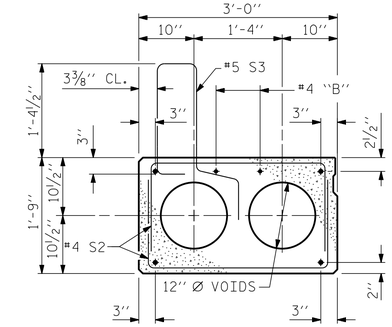

EXT. SLAB SECTION
(FOR PRESTRESSED STRAND LAYOUT, SEE INTERIOR SLAB SECTION.)

0.6" Ø LOW RELAXATION STRAND LAYOUT

◉ BOND SHALL BE BROKEN ON THESE STRANDS FOR A DISTANCE OF 2'-0" FROM END OF CORED SLAB UNIT. SEE STANDARD SPECIFICATIONS, ARTICLE 1078-7.

◉ OPTIONAL FULL LENGTH DEBONDED STRANDS. THESE STRANDS ARE NOT REQUIRED. IF THE FABRICATOR CHOOSES TO INCLUDE THESE STRANDS IN THE CORED SLAB UNIT, THE STRANDS SHALL BE DEBONDED FOR THE FULL LENGTH OF THE UNIT AT NO ADDITIONAL COST. SEE STANDARD SPECIFICATIONS, ARTICLE 1078-7.

DEBONDING LEGEND

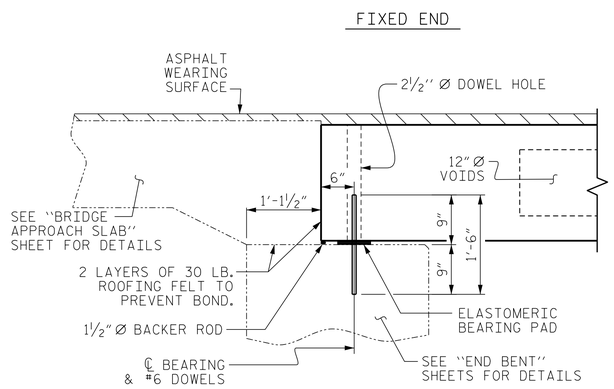

SECTION AT END BENT

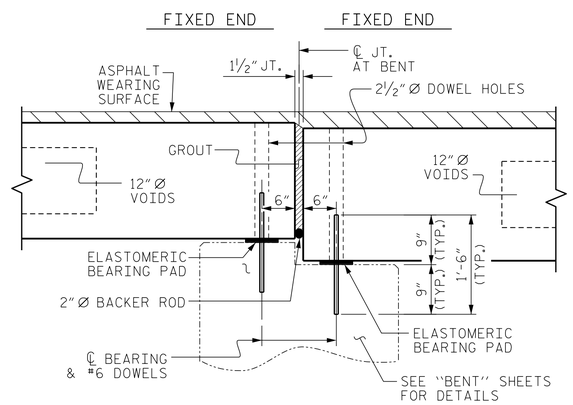

SECTION AT BENT No. 1

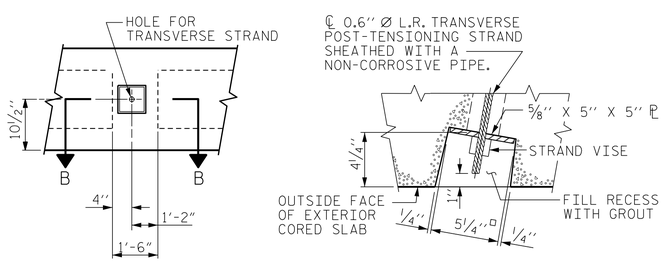

ELEVATION VIEW

SECTION B-B

GROUTED RECESS AT END OF POST-TENSIONED STRAND OF CORED SLABS

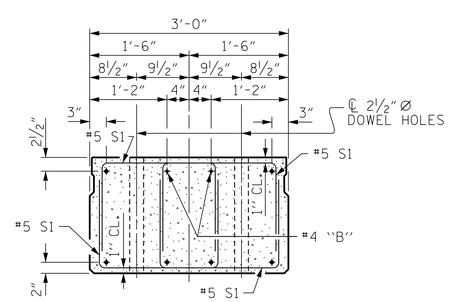

END ELEVATION

SHOWING PLACEMENT OF DOUBLE STIRRUPS AND LOCATION OF DOWEL HOLES. (STRAND LAYOUT NOT SHOWN.) INTERIOR SLAB UNIT SHOWN-EXTERIOR SLAB UNIT SIMILAR EXCEPT SHEAR KEY LOCATION.

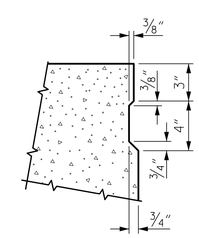

SHEAR KEY DETAIL

NOTE: OMIT SHEAR KEY ON OUTSIDE FACE OF EXTERIOR CORED SLABS.

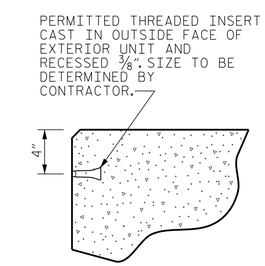

THREADED INSERT DETAIL

PROJECT NO. B-4563
JONES COUNTY
STATION: 16+94.00 -L-

SHEET 1 OF 3

DRAWN BY : M. SPARTZ DATE : 6/15/17
CHECKED BY : B.C. HUNT DATE : 6/17

DOCUMENT NOT CONSIDERED FINAL UNLESS ALL SIGNATURES COMPLETED

ENGINEER OF RECORD
12/6/2017
NORTH CAROLINA PROFESSIONAL SEAL 14091 ENGINEER BUCK CHARLES HUNT
DocuSigned by: Buck Charles Hunt
2F15C83973BA4EC...
ETHERILL ENGINEERING
1223 Jones Franklin Rd.
Raleigh, N.C. 27606
Bus: 919 851 8077
Fax: 919 851 8107
LICENSE NO. F-0377

STATE OF NORTH CAROLINA
DEPARTMENT OF TRANSPORTATION
RALEIGH

STANDARD
3'-0" X 1'-9"
PRESTRESSED CONCRETE CORED SLAB UNIT
105° SKEW
(SPAN A)

REVISIONS						SHEET NO.
NO.	BY:	DATE:	NO.	BY:	DATE:	S-5
1			3			TOTAL SHEETS
2			4			19

STD. NO. 21" PCS2_33_105S

P:\2017\17147.01_B-4563\Structures\DGN\B-4563 JONES 6_CS 21 Indgn
12/5/2017 1:37:36 PM

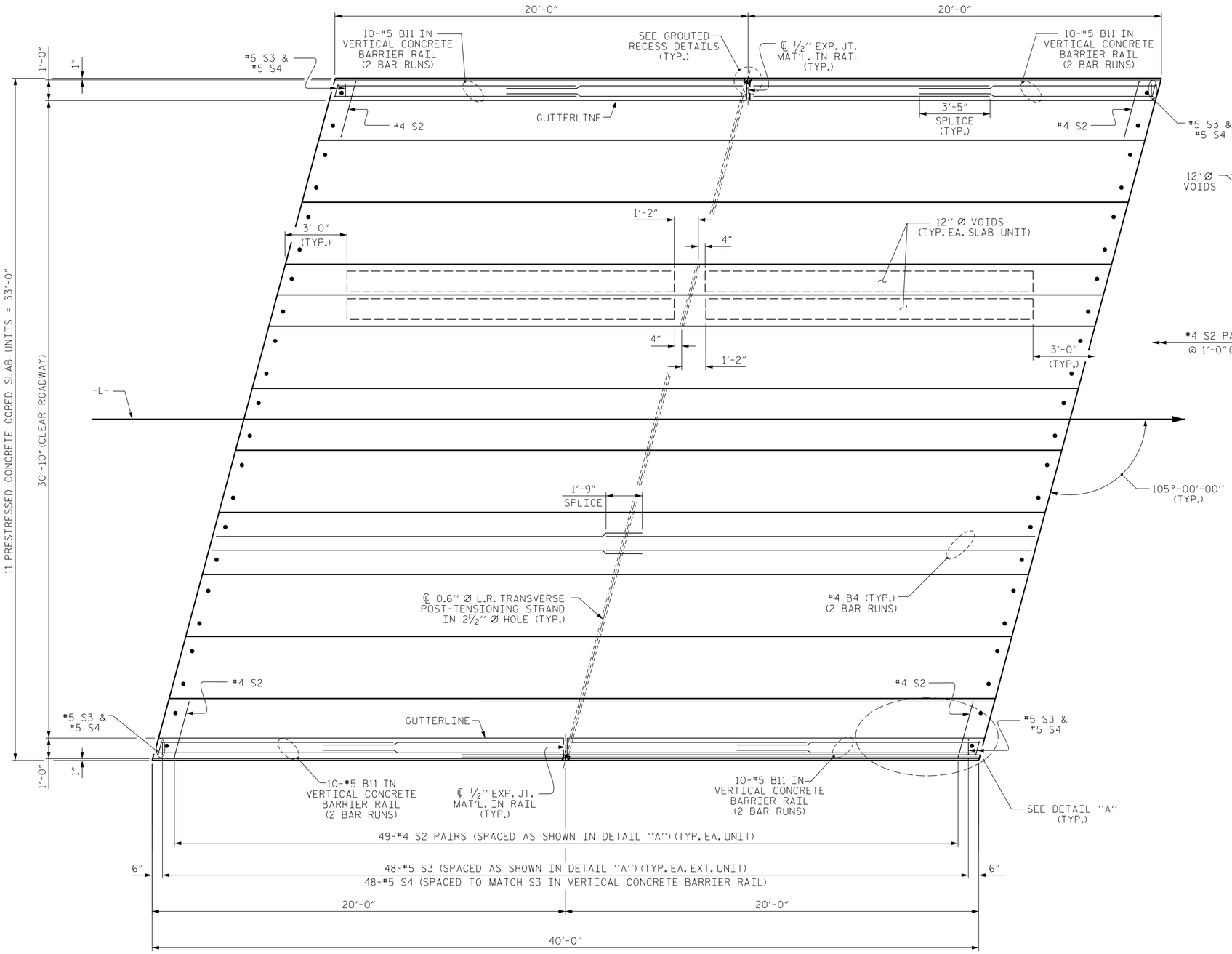

PLAN OF UNIT

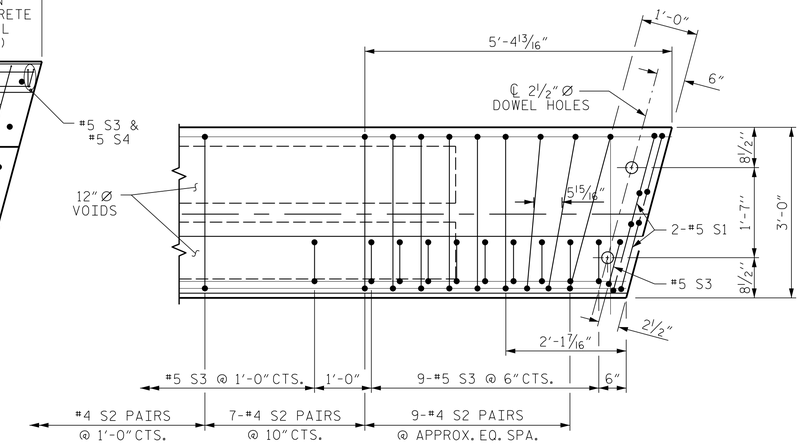

DETAIL "A"

(SIMILAR EACH END OF UNIT)
NOTE: EXTERIOR UNIT SHOWN - INTERIOR UNIT SIMILAR EXCEPT OMIT #5 S3 BARS.

PROJECT NO. B-4563
JONES COUNTY
STATION: 16+94.00 -L-

SHEET 2 OF 3

ENGINEER OF RECORD

NORTH CAROLINA PROFESSIONAL SEAL 14091 ENGINEER BUCK CHARLES HUNT

WETHERILL ENGINEERING
1223 Jones Franklin Rd.
Raleigh, N.C. 27606
Bus: 919 851 8077
Fax: 919 851 8107
LICENSE NO. F-0377

STATE OF NORTH CAROLINA
DEPARTMENT OF TRANSPORTATION
RALEIGH

PLAN OF 40' UNIT 30'-10" CLEAR ROADWAY 105° SKEW (SPAN A)

REVISIONS								SHEET NO.
NO.	BY:	DATE:	NO.	BY:	DATE:			S-6
1			3					TOTAL SHEETS
2			4					19

DOCUMENT NOT CONSIDERED FINAL UNLESS ALL SIGNATURES COMPLETED

DRAWN BY : M. SPARTZ DATE : 6/15/17
CHECKED BY : B.C. HUNT DATE : 6/17

P:\2017\17147.01_B-4563\Structures\DGN\B-4563 JONES 6_CS 21 indgn
12/6/2017 8:01:25 AM

STD. NO. 21"PCS_33_105S_40L

DocuSign Envelope ID: 37A8D76B-11E1-4FB9-9AFC-E0CBC84ACAB3

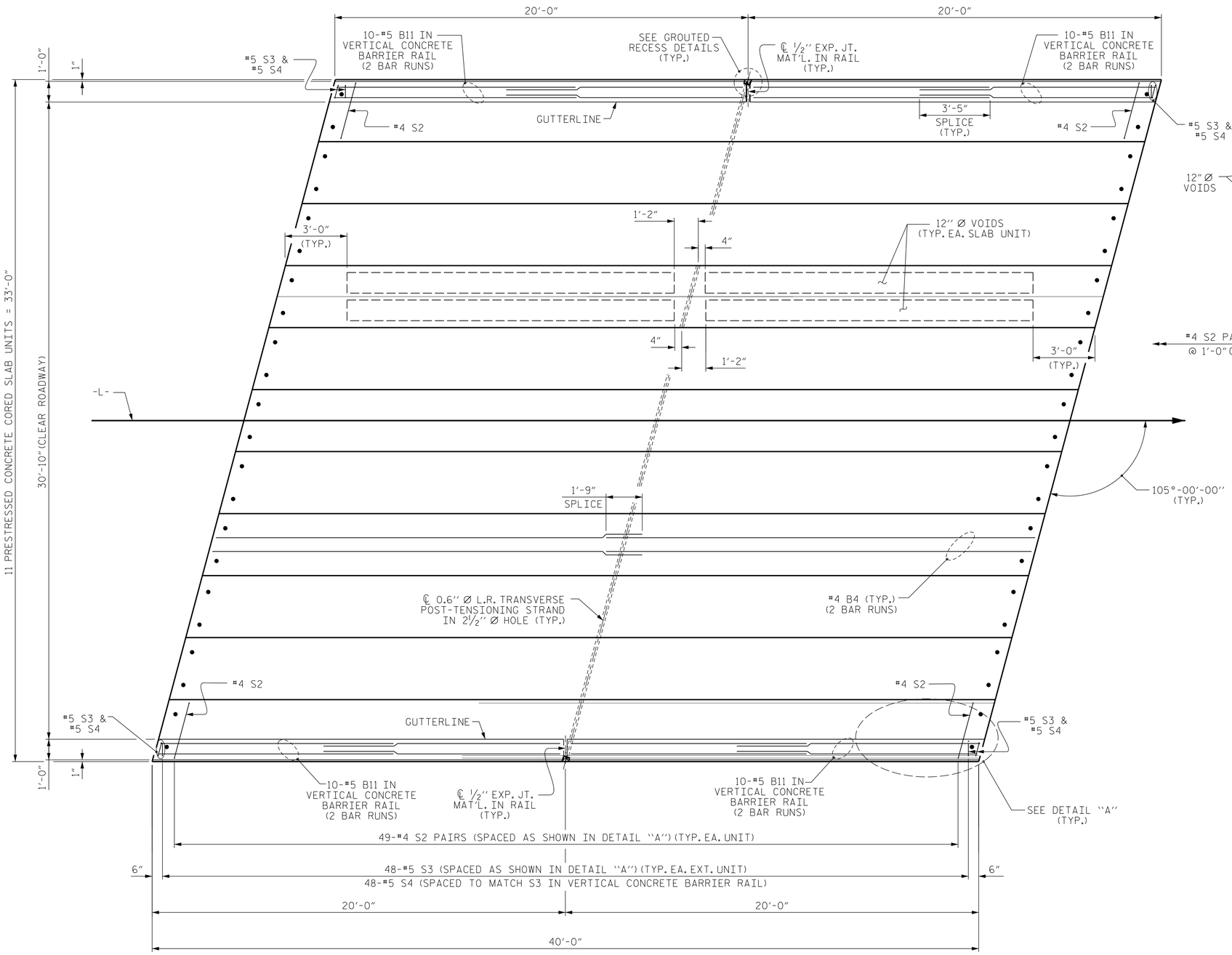

PLAN OF UNIT

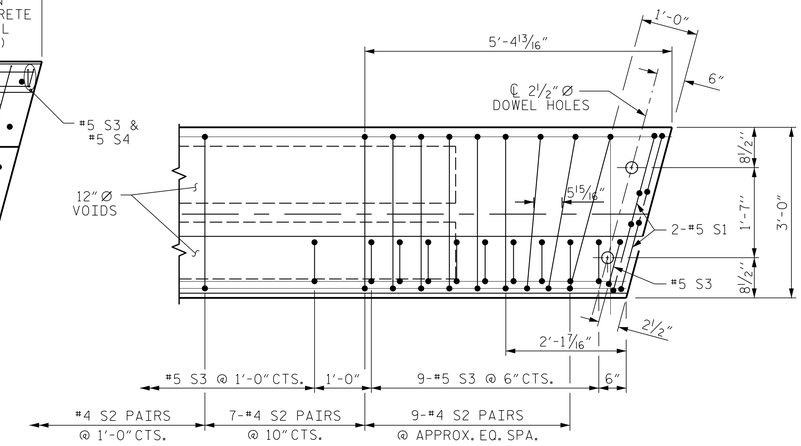

DETAIL "A"

(SIMILAR EACH END OF UNIT)
NOTE: EXTERIOR UNIT SHOWN - INTERIOR UNIT SIMILAR EXCEPT OMIT #5 S3 BARS.

PROJECT NO. B-4563
JONES COUNTY
STATION: 16+94.00 -L-

SHEET 2 OF 3

ENGINEER OF RECORD
12/6/2017
NORTH CAROLINA PROFESSIONAL SEAL 14091 ENGINEER BUCK CHARLES HUNT
DocuSigned by: Buck Charles Hunt
2F15C6397B8A4EC...

WETHERILL ENGINEERING
1223 Jones Franklin Rd.
Raleigh, N.C. 27606
Bus: 919 851 8077
Fax: 919 851 8107
LICENSE NO. F-0377

STATE OF NORTH CAROLINA
DEPARTMENT OF TRANSPORTATION
RALEIGH

PLAN OF 40' UNIT
30'-10" CLEAR ROADWAY
105° SKEW
(SPAN A)

REVISIONS								SHEET NO.
NO.	BY:	DATE:	NO.	BY:	DATE:			S-6
1			3					TOTAL SHEETS
2			4					19

DRAWN BY : M. SPARTZ DATE : 6/15/17
CHECKED BY : B.C. HUNT DATE : 6/17

DOCUMENT NOT CONSIDERED FINAL UNLESS ALL SIGNATURES COMPLETED

STD. NO. 21"PCS_33_105S_40L

P:\2017\17147.01_B-4563\Structures\DGN\B-4563 JONES 6_CS 21 indgn
12/6/2017 8:01:25 AM

DocuSign Envelope ID: 37A8D76B-11E1-4FB9-9AFC-E0CBC84ACAB3

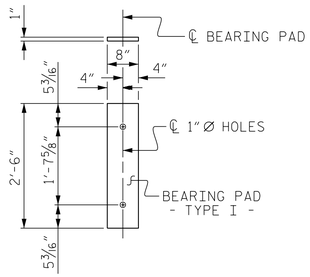

FIXED END
(TYPE I - 22 REQ'D)

ELASTOMERIC BEARING DETAILS

ELASTOMER IN ALL BEARINGS SHALL BE 60 DUROMETER HARDNESS.

BILL OF MATERIAL FOR ONE 40' CORED SLAB UNIT

				EXTERIOR UNIT		INTERIOR UNIT	
BAR	NUMBER	SIZE	TYPE	LENGTH	WEIGHT	LENGTH	WEIGHT
B4	4	#4	STR	20'-9"	55	20'-9"	55
S1	8	#5	3	4'-3"	35	4'-3"	35
S2	98	#4	3	5'-4"	349	5'-4"	349
✳ S3	50	#5	1	5'-7"	291		
REINFORCING STEEL			LBS.		439		439
✳ EPOXY COATED REINFORCING STEEL			LBS.		291		
5000 P.S.I. CONCRETE			CU. YDS.		5.8		5.8
0.6" Ø L.R. STRANDS			No.		13		13

BAR TYPES

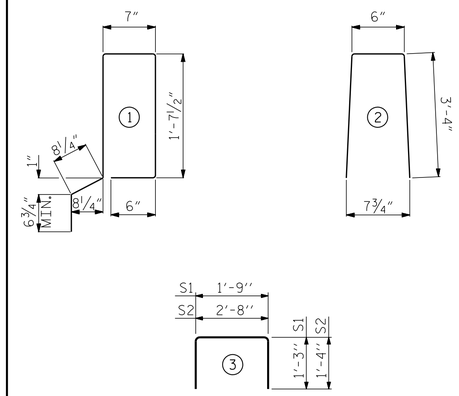

ALL BAR DIMENSIONS ARE OUT TO OUT

NOTES

ALL PRESTRESSING STRANDS SHALL BE 7-WIRE LOW RELAXATION GRADE 270 STRANDS AND SHALL CONFORM TO AASHTO M203 EXCEPT FOR SAMPLING REQUIREMENTS WHICH SHALL BE IN ACCORDANCE WITH THE STANDARD SPECIFICATIONS.

ALL REINFORCING STEEL CAST WITH THE CORED SLAB SECTIONS SHALL BE GRADE 60 AND SHALL BE INCLUDED IN THE UNIT PRICE BID FOR PRESTRESSED CONCRETE CORED SLABS.

RECESSES FOR TRANSVERSE STRANDS SHALL BE GROUTED AFTER THE TENSIONING OF THE STRANDS.

THE 2 1/2" Ø DOWEL HOLES AT FIXED ENDS OF SLAB SECTIONS SHALL BE FILLED WITH NON-SHRINK GROUT.

THE BACKER RODS SHALL CONFORM TO THE REQUIREMENTS OF TYPE M BOND BREAKER. SEE SECTION 1028 OF THE STANDARD SPECIFICATIONS.

WHEN CORED SLABS ARE CAST, AN INTERNAL HOLD-DOWN SYSTEM SHALL BE EMPLOYED TO PREVENT VOIDS FROM RISING OR MOVING SIDEWAYS. AT LEAST SIX WEEKS PRIOR TO CASTING CORED SLABS, THE CONTRACTOR SHALL SUBMIT TO THE ENGINEER FOR REVIEW AND COMMENT, DETAILED DRAWINGS OF THE PROPOSED HOLD-DOWN SYSTEM. IN ADDITION TO STRUCTURAL DETAILS, LOCATION AND SPACING OF THE HOLD-DOWNS SHALL BE INDICATED.

ALL REINFORCING STEEL IN THE VERTICAL CONCRETE BARRIER RAIL SHALL BE EPOXY COATED.

PRESTRESSING STRANDS SHALL BE CUT FLUSH WITH THE CORED SLAB UNIT ENDS.

APPLY EPOXY PROTECTIVE COATING TO CORED SLAB UNIT ENDS.

GROOVED CONTRACTION JOINTS, 1/2" IN DEPTH, SHALL BE TOOLED IN ALL EXPOSED FACES OF THE BARRIER RAIL AND IN ACCORDANCE WITH ARTICLE 825-10(B) OF THE STANDARD SPECIFICATIONS. A CONTRACTION JOINT SHALL BE LOCATED AT EACH THIRD POINT BETWEEN BARRIER RAIL EXPANSION JOINTS. ONLY ONE CONTRACTION JOINT IS REQUIRED AT MIDPOINT OF BARRIER RAIL SEGMENTS LESS THAN 20 FEET IN LENGTH AND NO CONTRACTION JOINTS ARE REQUIRED FOR THOSE SEGMENTS LESS THAN 10 FEET IN LENGTH.

FLAME CUTTING OF THE TRANSVERSE POST-TENSIONING STRAND IS NOT ALLOWED.

THE TRANSFER OF LOAD FROM THE ANCHORAGES TO THE CORED SLAB UNIT SHALL BE DONE WHEN THE CONCRETE HAS REACHED A COMPRESSIVE STRENGTH OF NOT LESS THAN THE REQUIRED STRENGTH SHOWN IN THE "CONCRETE RELEASE STRENGTH" TABLE.

FOR GROUT FOR STRUCTURES, SEE SPECIAL PROVISIONS.

THE PERMITTED THREADED INSERTS ARE DETAILED AS AN OPTION FOR THE CONTRACTOR TO ATTACH FALSEWORK AND FORMWORK DURING CONSTRUCTION.

THE PERMITTED THREADED INSERTS IN THE EXTERIOR UNITS SHALL BE SIZED BY THE CONTRACTOR, SPACED AT 4'-0" CENTERS AND GALVANIZED IN ACCORDANCE WITH SECTION 1076 OF THE STANDARD SPECIFICATIONS. STAINLESS STEEL THREADED INSERTS MAY BE USED AS AN ALTERNATE.

THE PERMITTED THREADED INSERTS SHALL BE GROUTED BY THE CONTRACTOR IMMEDIATELY FOLLOWING REMOVAL OF THE FALSEWORK.

THE COST OF THE PERMITTED THREADED INSERTS SHALL BE INCLUDED IN THE PRICE BID FOR THE PRECAST UNITS.

CORED SLABS REQUIRED

	NUMBER	LENGTH	TOTAL LENGTH
40' UNIT			
EXTERIOR C.S.	2	40'-0"	80'-0"
INTERIOR C.S.	9	40'-0"	360'-0"
TOTAL	11		440'-0"

BILL OF MATERIAL FOR VERTICAL CONCRETE BARRIER RAIL

BAR	BARS PER PAIR OF EXTERIOR UNITS	TOTAL NO.	SIZE	TYPE	LENGTH	WEIGHT
	40' UNIT					
✳ B11	80	80	#5	STR	11'-8"	973
✳ S4	100	100	#5	2	7'-2"	747
✳ EPOXY COATED REINFORCING STEEL				LBS.		1720
CLASS AA CONCRETE				CU.YDS.		10.2
TOTAL VERTICAL CONCRETE BARRIER RAIL				LN. FT.		80.25

DEAD LOAD DEFLECTION AND CAMBER

	3'-0" x 1'-9"
40' CORED SLAB UNIT	0.6" Ø L.R. STRAND
CAMBER (SLAB ALONE IN PLACE)	7/8" ↑
DEFLECTION DUE TO SUPERIMPOSED DEAD LOAD ✳✳	1/8" ↓
FINAL CAMBER	3/4" ↑

✳✳ INCLUDES FUTURE WEARING SURFACE

GUTTERLINE ASPHALT THICKNESS & RAIL HEIGHT

	ASPHALT OVERLAY THICKNESS @ MID-SPAN	RAIL HEIGHT @ MID-SPAN
40' UNITS	1 5/8"	3'-7 5/8"

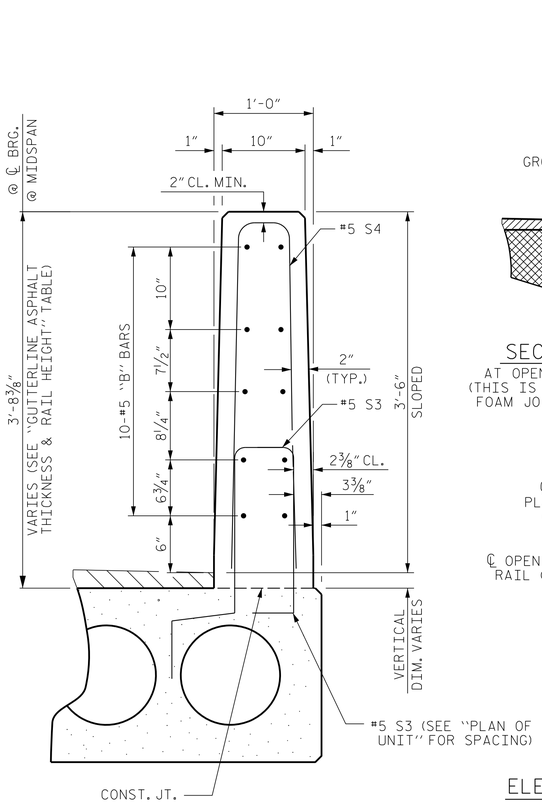

VERTICAL CONCRETE BARRIER RAIL SECTION

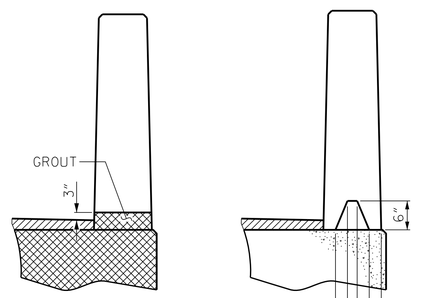

SECTION T-T
AT OPEN JOINT AT BENT
(THIS IS TO BE USED WHERE FOAM JOINT IS NOT USED)

SECTION S-S
AT DAM IN OPEN JOINT
(THIS IS TO BE USED ONLY WHEN SLIP FORM IS USED)

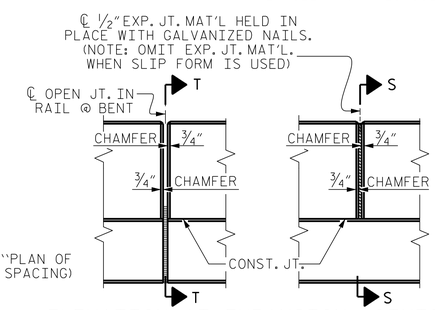

ELEVATION AT EXPANSION JOINTS

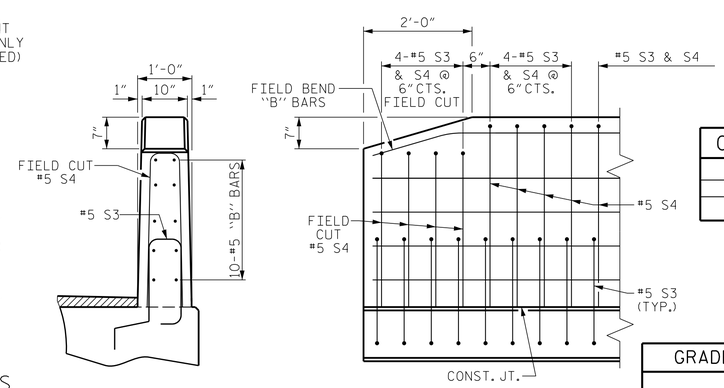

END VIEW

SIDE VIEW

END OF RAIL DETAILS

CONCRETE RELEASE STRENGTH

UNIT	PSI
40' UNIT	4000

GRADE 270 STRANDS

	0.6" Ø L.R.
AREA (SQUARE INCHES)	0.217
ULTIMATE STRENGTH (LBS. PER STRAND)	58,600
APPLIED PRESTRESS (LBS. PER STRAND)	43,950

DOCUMENT NOT CONSIDERED FINAL UNLESS ALL SIGNATURES COMPLETED

PROJECT NO. B-4563
JONES COUNTY
STATION: 16+94.00 -L-

SHEET 3 OF 3

ENGINEER OF RECORD
12/6/2017
NORTH CAROLINA PROFESSIONAL SEAL 14091 ENGINEER BUCK CHARLES HUNT

Docusigned by: Buck Charles Hunt
2F15CE5973BA4EC...

WETHERILL ENGINEERING
1223 Jones Franklin Rd.
Raleigh, N.C. 27606
Bus: 919 851 8077
Fax: 919 851 8107
LICENSE NO. F-0377

STATE OF NORTH CAROLINA
DEPARTMENT OF TRANSPORTATION
RALEIGH

STANDARD
3'-0" X 1'-9"
PRESTRESSED CONCRETE
CORED SLAB UNIT
105° SKEW
(SPAN A)

REVISIONS						SHEET NO.
NO.	BY:	DATE:	NO.	BY:	DATE:	S-7
1			3			TOTAL SHEETS
2			4			19

DRAWN BY : M. SPARTZ DATE : 6/15/17
CHECKED BY : B.C. HUNT DATE : 6/17

P:\2017\17147.01_B-4563\Structures\DGN\B-4563 JONES 6_CS 21 indgn
12/5/2017 1:42:02 PM

STD. NO. 21" PCS3_33_105S

DocuSign Envelope ID: 37A8D76B-11E1-4FB9-9AFC-E0CBC84ACAB3

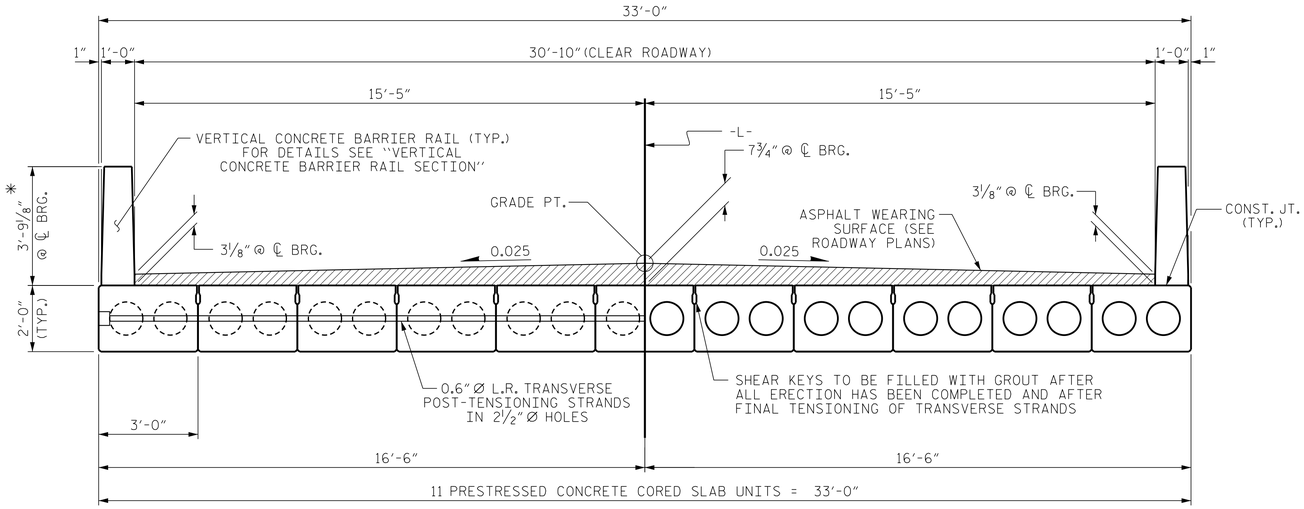

HALF SECTION
AT INTERMEDIATE DIAPHRAGMS

HALF SECTION
THROUGH VOIDS

TYPICAL SECTION

* - THE MAXIMUM BARRIER RAIL HEIGHT AND ASPHALT THICKNESS IS SHOWN. THE HEIGHT OF THE BARRIER RAIL AND ASPHALT THICKNESS VARIES WHILE THE TOP OF THE BARRIER RAIL FOLLOWS THE PROFILE OF THE GUTTERLINE. FOR RAIL HEIGHT DETAILS AND ASPHALT THICKNESS, SEE THE "VERTICAL CONCRETE BARRIER RAIL SECTION" DETAIL.

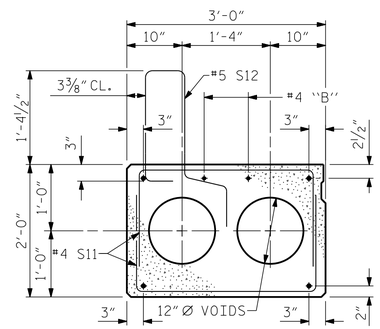

EXTERIOR SLAB SECTION

(FOR PRESTRESSED STRAND LAYOUT, SEE INTERIOR SLAB SECTION.)

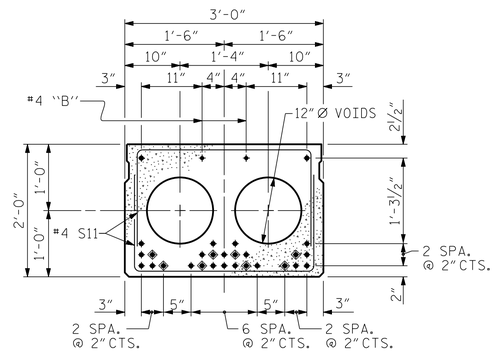

INTERIOR SLAB SECTION (70' UNIT)

(28 STRANDS REQUIRED)

0.6" Ø LOW RELAXATION STRAND LAYOUT

◈ BOND SHALL BE BROKEN ON THESE STRANDS FOR A DISTANCE OF 12'-0" FROM END OF CORED SLAB UNIT. SEE STANDARD SPECIFICATIONS, ARTICLE 1078-7.

DEBONDING LEGEND

FIXED END

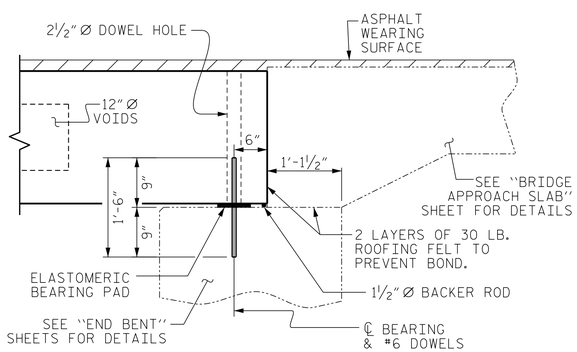

SECTION AT END BENT

FIXED END FIXED END

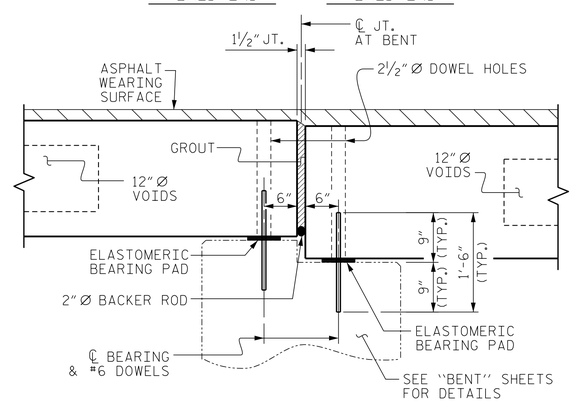

SECTION AT BENT No. 1

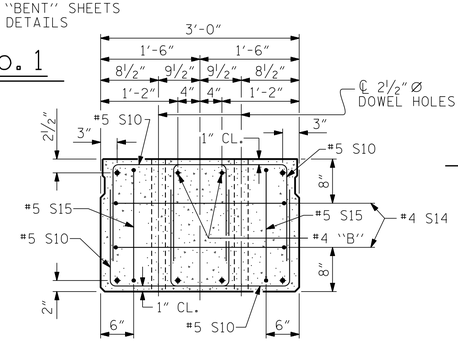

END ELEVATION

SHOWING PLACEMENT OF DOUBLE STIRRUPS AND LOCATION OF DOWEL HOLES. (STRAND LAYOUT NOT SHOWN.) INTERIOR SLAB UNIT SHOWN-EXTERIOR SLAB UNIT SIMILAR EXCEPT SHEAR KEY LOCATION.

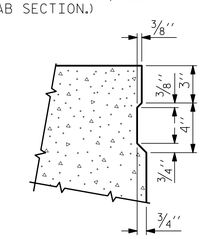

SHEAR KEY DETAIL

NOTE: OMIT SHEAR KEY ON OUTSIDE FACE OF EXTERIOR CORED SLABS.

PERMITTED THREADED INSERT CAST IN OUTSIDE FACE OF EXTERIOR UNIT AND RECESSED ⅜". SIZE TO BE DETERMINED BY CONTRACTOR.

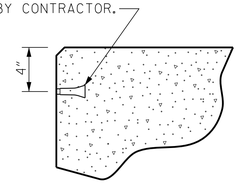

THREADED INSERT DETAIL

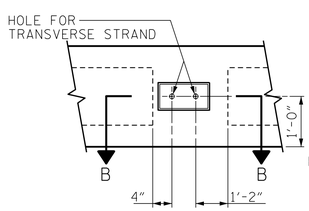

ELEVATION VIEW

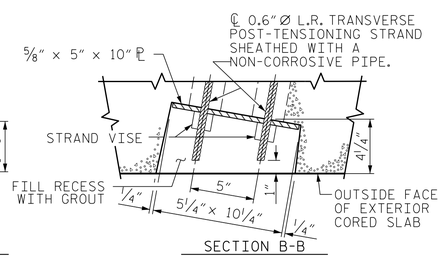

SECTION B-B

GROUTED RECESS AT END OF POST-TENSIONED STRAND-CORED SLABS

PROJECT NO. B-4563
JONES COUNTY
STATION: 16+94.00 -L-

SHEET 1 OF 3

ENGINEER OF RECORD
12/6/2017
NORTH CAROLINA PROFESSIONAL SEAL 14091 ENGINEER BUCK CHARLES HUNT
DocuSigned by: Buck Charles Hunt
2F15C8597B8A4EC...
WETHERILL ENGINEERING
1223 Jones Franklin Rd.
Raleigh, N.C. 27606
Bus: 919 851 8077
Fax: 919 851 8107
LICENSE NO. F-0377

STATE OF NORTH CAROLINA
DEPARTMENT OF TRANSPORTATION
RALEIGH

STANDARD
3'-0" X 2'-0"
PRESTRESSED CONCRETE CORED SLAB UNIT
105° SKEW
(SPAN B)

REVISIONS								SHEET NO.
NO.	BY:	DATE:	NO.	BY:	DATE:			S-8
1			3					TOTAL SHEETS
2			4					19

DOCUMENT NOT CONSIDERED FINAL UNLESS ALL SIGNATURES COMPLETED

DRAWN BY : M. SPARTZ DATE : 6/15/17
CHECKED BY : B.C. HUNT DATE : 6/17

P:\2017\17147.01_B-4563\Structures\DGN\B-4563 JONES 6_CS 24 lndgn
12/5/2017 1:46:02 PM

STD. NO. 24PCS4_33_105S

DocuSign Envelope ID: 37A8D76B-11E1-4FB9-9AFC-E0CBC84ACAB3

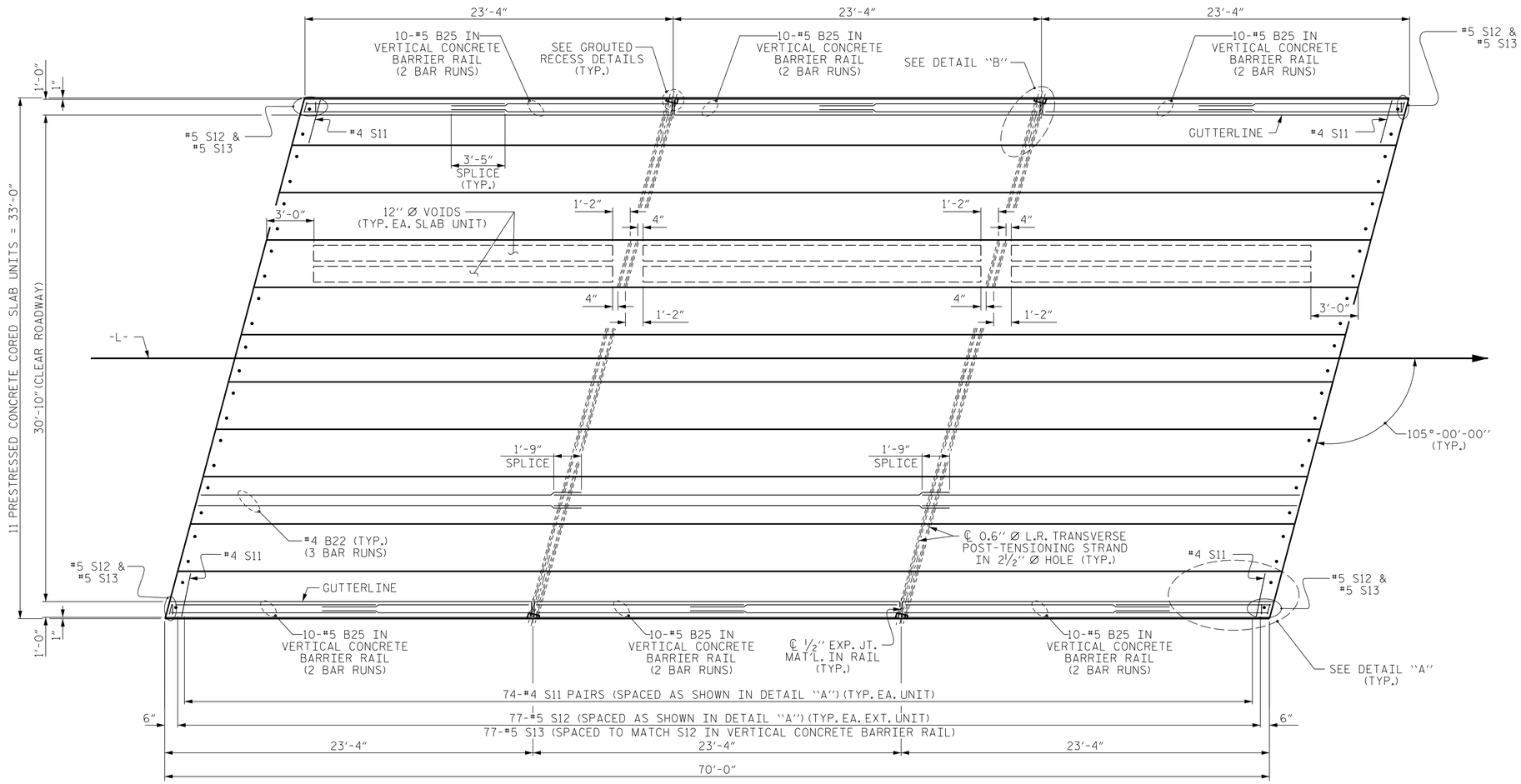

PLAN OF UNIT

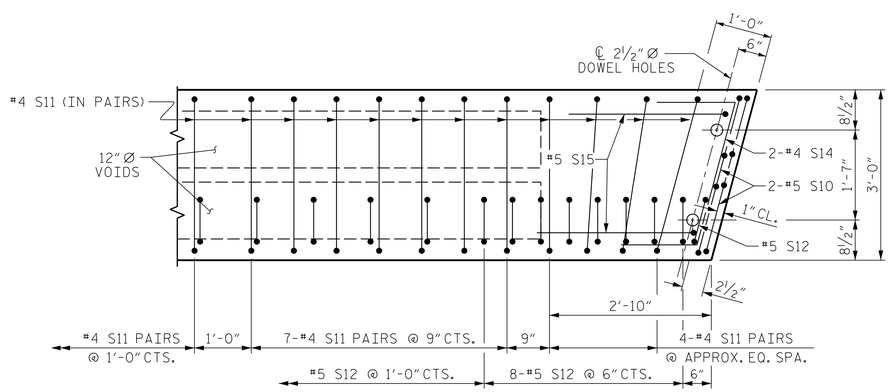

DETAIL "A"

(SIMILAR EACH END OF UNIT)
NOTE: EXTERIOR UNIT SHOWN - INTERIOR UNIT SIMILAR EXCEPT OMIT #5 S12 BARS.

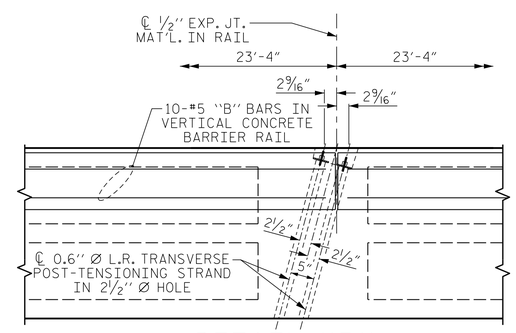

DETAIL "B"

#4 S11 BARS MAY BE SHIFTED AS NECESSARY TO MAINTAIN 1" CLEAR TO GROUTED RECESS AND 2½" Ø TRANSVERSE POST-TENSIONING STRAND HOLES

PROJECT NO. B-4563
JONES COUNTY
STATION: 16+94.00 -L-

SHEET 2 OF 3

ENGINEER OF RECORD
12/6/2017
NORTH CAROLINA PROFESSIONAL SEAL 14091 ENGINEER BUCK CHARLES HUNT
DocuSigned by: Buck Charles Hunt
2F15C83073BA4EC...

WETHERILL ENGINEERING
1223 Jones Franklin Rd.
Raleigh, N.C. 27606
Bus: 919 851 8077
Fax: 919 851 8107
LICENSE NO. F-0377

STATE OF NORTH CAROLINA
DEPARTMENT OF TRANSPORTATION
RALEIGH

PLAN OF 70' UNIT
30'-10" CLEAR ROADWAY
105° SKEW
(SPAN B)

REVISIONS						SHEET NO.
NO.	BY:	DATE:	NO.	BY:	DATE:	S-9
1			3			TOTAL SHEETS
2			4			19

DRAWN BY : M. SPARTZ DATE : 6/15/17
CHECKED BY : B.C. HUNT DATE : 6/17

DOCUMENT NOT CONSIDERED FINAL UNLESS ALL SIGNATURES COMPLETED

P:\2017\17147.01_B-4563\Structures\DGN\B-4563 JONES 6_CS 24 indgn
12/5/2017 1:50:23 PM

STD. NO. 24PCS_33_105S_70L

DocuSign Envelope ID: 37A8D76B-11E1-4FB9-9AFC-E0CBC84ACAB3

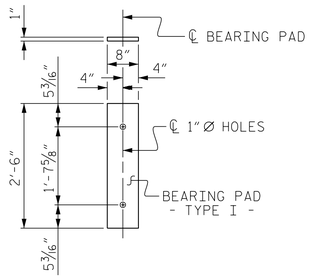

FIXED END
(TYPE I - 22 REQ'D)

ELASTOMERIC BEARING DETAILS

ELASTOMER IN ALL BEARINGS SHALL BE 60 DUROMETER HARDNESS.

BILL OF MATERIAL FOR ONE 70' CORED SLAB UNIT

				EXTERIOR UNIT		INTERIOR UNIT	
BAR	NUMBER	SIZE	TYPE	LENGTH	WEIGHT	LENGTH	WEIGHT
B22	6	#4	STR	24'-6"	98	24'-6"	98
S10	8	#5	3	4'-10"	40	4'-10"	40
S11	148	#4	3	5'-10"	577	5'-10"	577
✳S12	79	#5	1	5'-7"	460		
S14	4	#4	4	5'-8"	15	5'-8"	15
S15	4	#5	3	7'-1"	30	7'-1"	30
REINFORCING STEEL			LBS.		760		760
✳EPOXY COATED REINFORCING STEEL			LBS.		460		
7000 P.S.I. CONCRETE			CU. YDS.		12.0		12.0
0.6" Ø L.R. STRANDS			No.		28		28

BAR TYPES

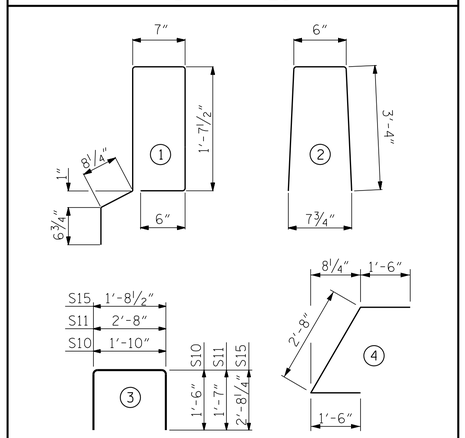

ALL BAR DIMENSIONS ARE OUT TO OUT

NOTES

ALL PRESTRESSING STRANDS SHALL BE 7-WIRE LOW RELAXATION GRADE 270 STRANDS AND SHALL CONFORM TO AASHTO M203 EXCEPT FOR SAMPLING REQUIREMENTS WHICH SHALL BE IN ACCORDANCE WITH THE STANDARD SPECIFICATIONS.

ALL REINFORCING STEEL CAST WITH THE CORED SLAB SECTIONS SHALL BE GRADE 60 AND SHALL BE INCLUDED IN THE UNIT PRICE BID FOR PRESTRESSED CONCRETE CORED SLABS.

RECESSES FOR TRANSVERSE STRANDS SHALL BE GROUTED AFTER THE TENSIONING OF THE STRANDS.

THE 2 1/2" Ø DOWEL HOLES AT FIXED ENDS OF SLAB SECTIONS SHALL BE FILLED WITH NON-SHRINK GROUT.

THE BACKER RODS SHALL CONFORM TO THE REQUIREMENTS OF TYPE M BOND BREAKER. SEE SECTION 1028 OF THE STANDARD SPECIFICATIONS.

WHEN CORED SLABS ARE CAST, AN INTERNAL HOLD-DOWN SYSTEM SHALL BE EMPLOYED TO PREVENT VOIDS FROM RISING OR MOVING SIDEWAYS. AT LEAST SIX WEEKS PRIOR TO CASTING CORED SLABS, THE CONTRACTOR SHALL SUBMIT TO THE ENGINEER FOR REVIEW AND COMMENT, DETAILED DRAWINGS OF THE PROPOSED HOLD-DOWN SYSTEM. IN ADDITION TO STRUCTURAL DETAILS, LOCATION AND SPACING OF THE HOLD-DOWNS SHALL BE INDICATED.

THE TRANSFER OF LOAD FROM THE ANCHORAGES TO THE CORED SLAB UNIT SHALL BE DONE WHEN THE CONCRETE HAS REACHED A COMPRESSIVE STRENGTH OF NOT LESS THAN THE REQUIRED STRENGTH SHOWN IN THE "CONCRETE RELEASE STRENGTH" TABLE.

ALL REINFORCING STEEL IN VERTICAL CONCRETE BARRIER RAILS SHALL BE EPOXY COATED.

PRESTRESSING STRANDS SHALL BE CUT FLUSH WITH THE CORED SLAB UNIT ENDS.

APPLY EPOXY PROTECTIVE COATING TO CORED SLAB UNIT ENDS.

GROOVED CONTRACTION JOINTS, 1/2" IN DEPTH, SHALL BE TOOLED IN ALL EXPOSED FACES OF THE BARRIER RAIL AND IN ACCORDANCE WITH ARTICLE 825-10(B) OF THE STANDARD SPECIFICATIONS. A CONTRACTION JOINT SHALL BE LOCATED AT EACH THIRD POINT BETWEEN BARRIER RAIL EXPANSION JOINTS. ONLY ONE CONTRACTION JOINT IS REQUIRED AT MIDPOINT OF BARRIER RAIL SEGMENTS LESS THAN 20 FEET IN LENGTH AND NO CONTRACTION JOINTS ARE REQUIRED FOR THOSE SEGMENTS LESS THAN 10 FEET IN LENGTH.

FLAME CUTTING OF THE TRANSVERSE POST-TENSIONING STRAND IS NOT ALLOWED.

MAINTAIN A SYMMETRIC TENSION FORCE BETWEEN EACH PAIR OF TRANSVERSE POST TENSIONING STRANDS IN THE DIAPHRAGM.

THE #4 S11 STIRRUPS MAY BE SHIFTED AS NECESSARY TO MAINTAIN 1" CLEAR TO THE GROUTED RECESS.

FOR GROUT FOR STRUCTURES, SEE SPECIAL PROVISIONS.

THE PERMITTED THREADED INSERTS ARE DETAILED AS AN OPTION FOR THE CONTRACTOR TO ATTACH FALSEWORK AND FORMWORK DURING CONSTRUCTION.

THE PERMITTED THREADED INSERTS IN THE EXTERIOR UNITS SHALL BE SIZED BY THE CONTRACTOR, SPACED AT 4'-0" CENTERS AND GALVANIZED IN ACCORDANCE WITH SECTION 1076 OF THE STANDARD SPECIFICATIONS. STAINLESS STEEL THREADED INSERTS MAY BE USED AS AN ALTERNATE.

THE PERMITTED THREADED INSERTS SHALL BE GROUTED BY THE CONTRACTOR IMMEDIATELY FOLLOWING REMOVAL OF THE FALSEWORK.

THE COST OF THE PERMITTED THREADED INSERTS SHALL BE INCLUDED IN THE PRICE BID FOR THE PRECAST UNITS.

GUTTERLINE ASPHALT THICKNESS & RAIL HEIGHT

	ASPHALT OVERLAY THICKNESS @ MID-SPAN	RAIL HEIGHT @ MID-SPAN
70' UNITS	1 5/8"	3'-7 5/8"

CORED SLABS REQUIRED

	NUMBER	LENGTH	TOTAL LENGTH
70' UNIT			
EXTERIOR C.S.	2	70'-0"	140'-0"
INTERIOR C.S.	9	70'-0"	630'-0"
TOTAL	11		770'-0"

BILL OF MATERIAL FOR VERTICAL CONCRETE BARRIER RAIL

BAR	BARS PER PAIR OF EXTERIOR UNITS	TOTAL NO.	SIZE	TYPE	LENGTH	WEIGHT
	70' UNIT					
✳B25	120	120	#5	STR	13'-8"	1711
✳S13	158	158	#5	2	7'-2"	1181
✳EPOXY COATED REINFORCING STEEL				LBS.		2892
CLASS AA CONCRETE				CU.YDS.		18.1
TOTAL VERTICAL CONCRETE BARRIER RAIL				LN. FT.		140.26

DEAD LOAD DEFLECTION AND CAMBER

	3'-0" x 2'-0"
70' CORED SLAB UNIT	0.6" Ø L.R. STRAND
CAMBER (SLAB ALONE IN PLACE)	2 1/4" ↑
DEFLECTION DUE TO SUPERIMPOSED DEAD LOAD✳✳	3/4" ↓
FINAL CAMBER	1 1/2" ↑

✳✳ INCLUDES FUTURE WEARING SURFACE

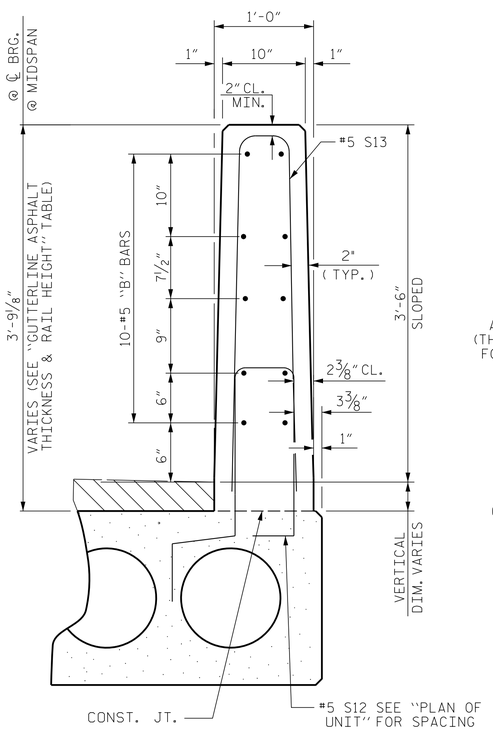

SECTION THRU RAIL

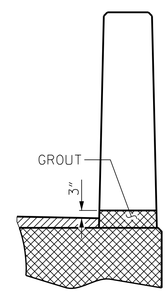

SECTION T-T
AT OPEN JOINT AT BENT
(THIS IS TO BE USED WHERE FOAM JOINT IS NOT USED)

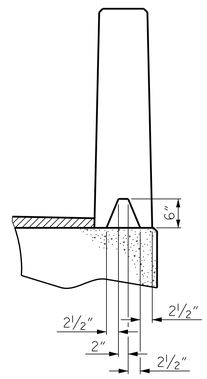

SECTION S-S
AT DAM IN OPEN JOINT
(THIS IS TO BE USED ONLY WHEN SLIP FORM IS USED)

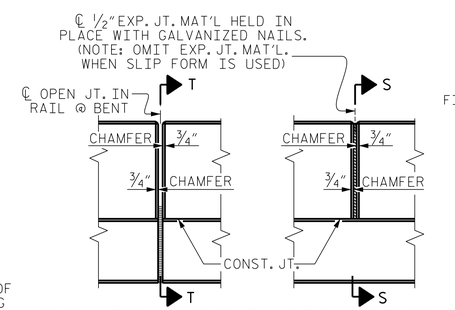

ELEVATION AT EXPANSION JOINTS

VERTICAL CONCRETE BARRIER RAIL DETAILS

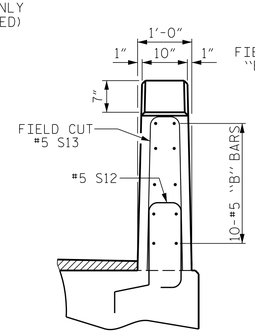

END VIEW

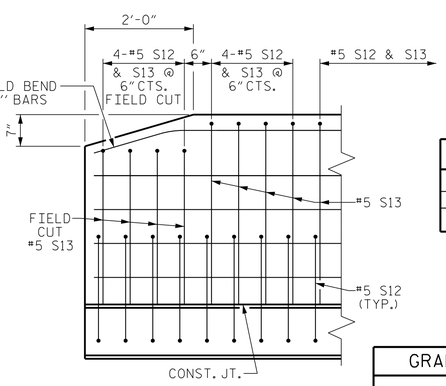

SIDE VIEW

END OF RAIL DETAILS

CONCRETE RELEASE STRENGTH

UNIT	PSI
70' UNITS	5500

GRADE 270 STRANDS

	0.6" Ø L.R.
AREA (SQUARE INCHES)	0.217
ULTIMATE STRENGTH (LBS. PER STRAND)	58,600
APPLIED PRESTRESS (LBS. PER STRAND)	43,950

DOCUMENT NOT CONSIDERED FINAL UNLESS ALL SIGNATURES COMPLETED

ENGINEER OF RECORD
12/6/2017
NORTH CAROLINA PROFESSIONAL SEAL 14091 ENGINEER BUCK CHARLES HUNT
DocuSigned by: Buck Charles Hunt
2F15CB3973BA4EC...

WETHERILL ENGINEERING
1223 Jones Franklin Rd.
Raleigh, N.C. 27606
Bus: 919 851 8077
Fax: 919 851 8107
LICENSE NO. F-0377

PROJECT NO. B-4563
JONES COUNTY
STATION: 16+94.00 -L-

SHEET 3 OF 3

STATE OF NORTH CAROLINA
DEPARTMENT OF TRANSPORTATION
RALEIGH

STANDARD
3'-0" X 2'-0"
PRESTRESSED CONCRETE
CORED SLAB UNIT
(SPAN B)

REVISIONS						SHEET NO.
NO.	BY:	DATE:	NO.	BY:	DATE:	S-10
1			3			TOTAL SHEETS
2			4			19

DRAWN BY : M. SPARTZ DATE : 6/15/17
CHECKED BY : B.C. HUNT DATE : 6/17

P:\2017\17147.01_B-4563\Structures\DGN\B-4563 JONES 6_CS 24 indgn
12/5/2017 1:52:27 PM

STD. NO. 24PCS3_33_75&105S

DocuSign Envelope ID: 37A8D76B-11E1-4FB9-9AFC-E0CBC84ACAB3

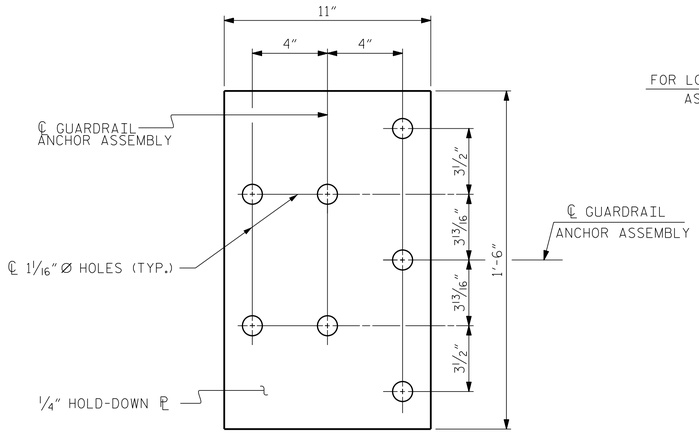

PLAN

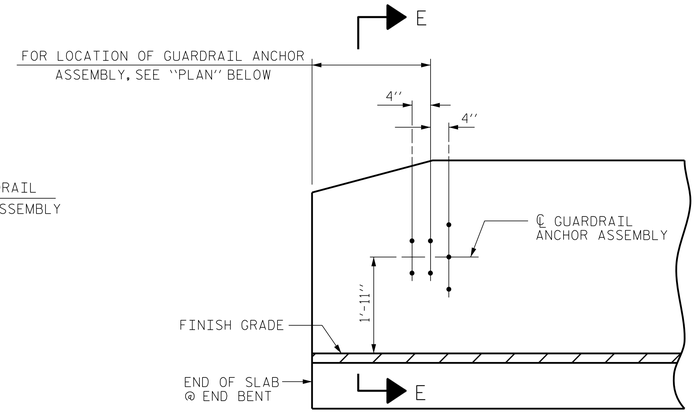

ELEVATION

NOTES

THE GUARDRAIL ANCHOR ASSEMBLY SHALL CONSIST OF A 1/4" HOLD DOWN PLATE AND 7 - 7/8" Ø BOLTS WITH NUTS AND WASHERS.

THE HOLD-DOWN PLATE SHALL CONFORM TO AASHTO M270 GRADE 36. AFTER FABRICATION, THE HOLD-DOWN PLATE SHALL BE HOT-DIP GALVANIZED IN ACCORDANCE WITH AASHTO M111.

BOLTS SHALL CONFORM TO THE REQUIREMENTS OF ASTM A307 AND NUTS SHALL CONFORM TO THE REQUIREMENTS OF AASHTO M291. BOLTS, NUTS AND WASHERS SHALL BE GALVANIZED. (AT THE CONTRACTOR'S OPTION, STAINLESS STEEL BOLTS, NUTS AND WASHERS MAY BE USED AS AN ALTERNATE FOR THE 7/8" Ø GALVANIZED BOLTS, NUTS AND WASHERS. THEY SHALL CONFORM TO OR EXCEED THE MECHANICAL REQUIREMENTS OF ASTM A307. THE USE OF THIS ALTERNATE SHALL BE APPROVED BY THE ENGINEER.)

THE GUARDRAIL ANCHOR ASSEMBLY IS REQUIRED AT ALL POINTS WHERE APPROACH GUARDRAIL IS TO BE ATTACHED TO THE END OF BARRIER RAIL. FOR POINTS OF ATTACHMENT, SEE SKETCH.

AFTER INSTALLATION, THE EXPOSED THREAD OF THE BOLT SHALL BE BURRED WITH A SHARP POINTED TOOL.

THE COST OF THE GUARDRAIL ANCHOR ASSEMBLY SHALL BE INCLUDED IN THE UNIT CONTRACT PRICE BID FOR VERTICAL CONCRETE BARRIER RAIL.

THE VERTICAL REINFORCING BARS MAY BE SHIFTED SLIGHTLY IN THE VERTICAL CONCRETE BARRIER RAIL TO CLEAR ASSEMBLY BOLTS.

THE 1 1/4" Ø HOLES SHALL BE FORMED OR DRILLED WITH A CORE BIT. IMPACT TOOLS WILL NOT BE PERMITTED. ANY CONCRETE DAMAGED BY THIS WORK SHALL BE REPAIRED TO THE SATISFACTION OF THE ENGINEER.

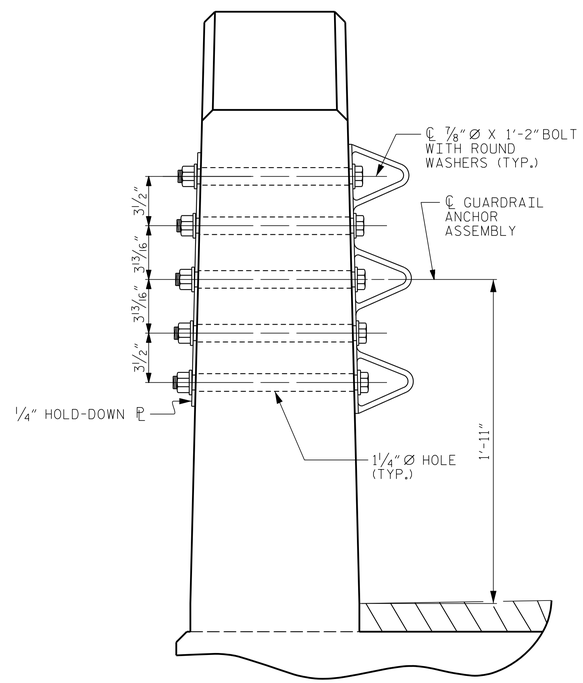

SECTION E-E

GUARDRAIL ANCHOR ASSEMBLY DETAILS

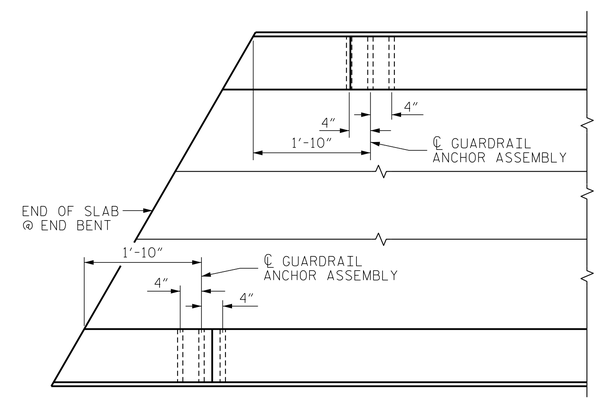

PLAN

LOCATION OF ANCHORS FOR GUARDRAIL

END BENT #1 SHOWN, END BENT #2 SIMILAR.

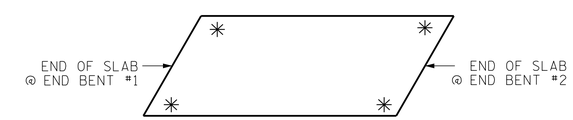

SKETCH SHOWING POINTS OF ATTACHMENT

✳ DENOTES GUARDRAIL ANCHOR ASSEMBLY

PROJECT NO. B-4563

JONES COUNTY

STATION: 16+94.00 -L-

ASSEMBLED BY : M. SPARTZ	DATE : 6/17		
CHECKED BY : G.M. GILLAND	DATE : 7/17		
DRAWN BY : MAA 5/10	REV. 12/5/11	MAA/GM	
CHECKED BY : GM 5/10	REV. 6/13	MAA/GM	
	REV. 1/15	MAA/TMG	

DOCUMENT NOT CONSIDERED FINAL UNLESS ALL SIGNATURES COMPLETED

ENGINEER OF RECORD
12/6/2017
NORTH CAROLINA PROFESSIONAL SEAL 14091 ENGINEER BUCK CHARLES HUNT
DocuSigned by: Buck Charles Hunt
2F15CB3973BA4EC...

WETHERILL ENGINEERING
1223 Jones Franklin Rd.
Raleigh, N.C. 27606
Bus: 919 851 8077
Fax: 919 851 8107
LICENSE NO. F-0377

STATE OF NORTH CAROLINA
DEPARTMENT OF TRANSPORTATION
RALEIGH

STANDARD
GUARDRAIL ANCHORAGE DETAILS
FOR VERTICAL CONCRETE BARRIER RAIL

REVISIONS							SHEET NO.
NO.	BY:	DATE:	NO.	BY:	DATE:		S-11
1			3				TOTAL SHEETS
2			4				19

STD. NO. GRA3

P:\2017\17147.01_B-4563\Structures\DGN\B-4563 JONES 6_GRAdgn
12/5/2017 1:54:44 PM

DocuSign Envelope ID: 37A8D76B-11E1-4FB9-9AFC-E0CBC84ACAB3

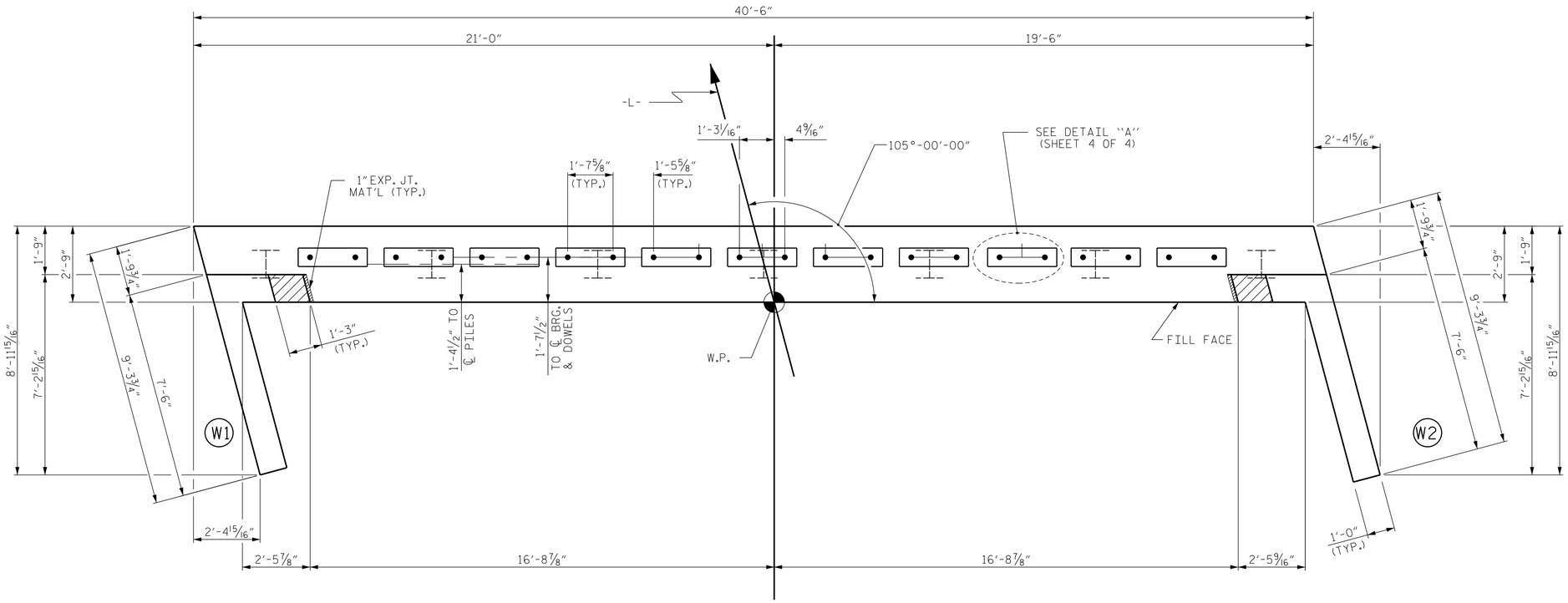

PLAN

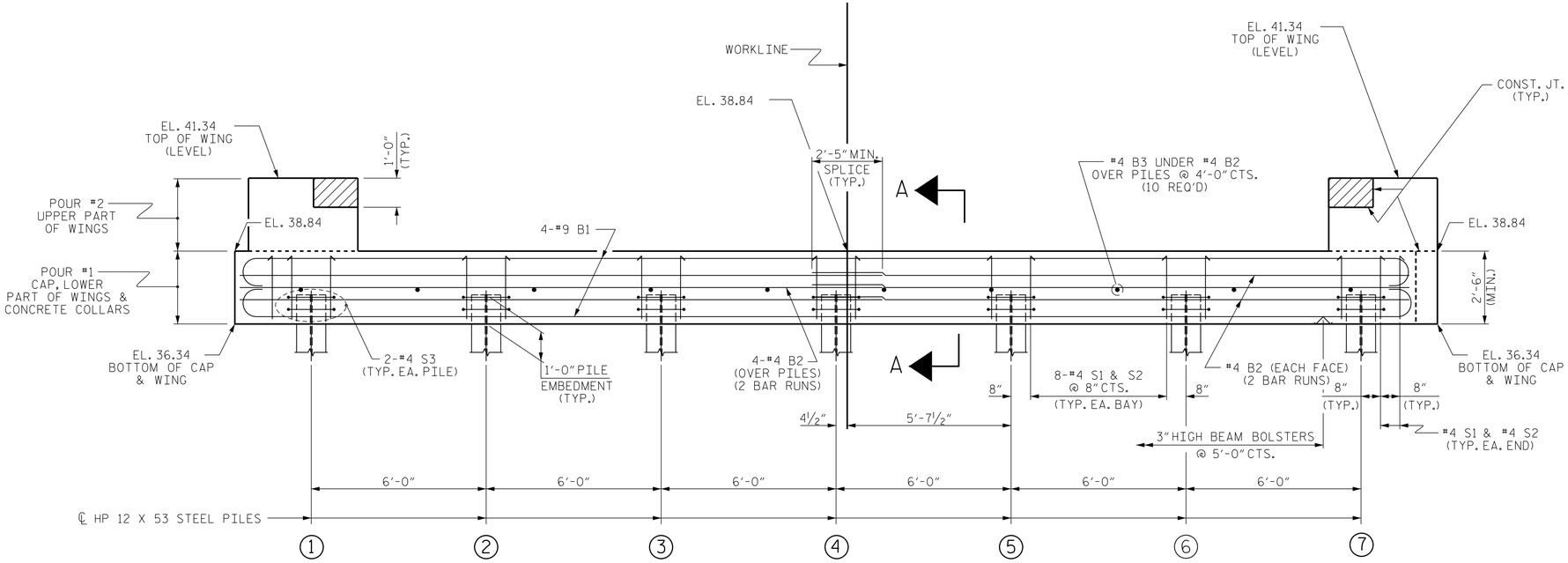

ELEVATION

WINGS NOT SHOWN FOR CLARITY.
FOR SECTION A-A, SEE SHEET 4 OF 4.
CONCRETE COLLARS FOR STEEL PILES NOT SHOWN IN PLAN AND ELEVATION VIEWS FOR CLARITY.
SEE "CORROSION PROTECTION FOR STEEL PILES DETAIL", SHEET 4 OF 4.

NOTES

STIRRUPS IN CAP MAY BE SHIFTED AS NECESSARY TO CLEAR DOWELS.

THE CONCRETE IN THE SHADED AREA OF THE WING SHALL BE POURED AFTER THE VERTICAL CONCRETE BARRIER RAIL IS CAST IF SLIP FORMING IS USED.

FOR PILE SPLICE DETAILS, SEE SHEET 4 OF 4.

FOR WING DETAILS, SEE SHEET 3 OF 4.

PROJECT NO. B-4563
JONES COUNTY
STATION: 16+94.00 -L-

SHEET 1 OF 4

ASSEMBLED BY : M. SPARTZ	DATE : 6/17		
CHECKED BY : B.C. HUNT	DATE : 7/17		
DRAWN BY : DGE 01/10	REV. 4/15	MAA/TMG	
CHECKED BY : MKT 01/10			

DOCUMENT NOT CONSIDERED FINAL UNLESS ALL SIGNATURES COMPLETED

ENGINEER OF RECORD
12/6/2017
NORTH CAROLINA PROFESSIONAL SEAL 14091 ENGINEER BUCK CHARLES HUNT
DocuSigned by: Buck Charles Hunt
2F15CB39738A4EC...

WETHERILL ENGINEERING
1223 Jones Franklin Rd.
Raleigh, N.C. 27606
Bus: 919 851 8077
Fax: 919 851 8107
LICENSE NO. F-0377

STATE OF NORTH CAROLINA
DEPARTMENT OF TRANSPORTATION
RALEIGH

SUBSTRUCTURE

END BENT No. 1

REVISIONS								SHEET NO.
NO.	BY:	DATE:	NO.	BY:	DATE:			S-12
1			3					TOTAL SHEETS
2			4					19

P:\2017\17147.01_B-4563\Structures\DGN\B-4563 JONES 6_EBT.dgn
12/5/2017 1:59:12 PM

STD. NO. EB_33_105S

DocuSign Envelope ID: 37A8D76B-11E1-4FB9-9AFC-E0CBC84ACAB3

NOTES

STIRRUPS IN CAP MAY BE SHIFTED AS NECESSARY TO CLEAR DOWELS.

THE CONCRETE IN THE SHADED AREA OF THE WING SHALL BE POURED AFTER THE VERTICAL CONCRETE BARRIER RAIL IS CAST IF SLIP FORMING IS USED.

FOR PILE SPLICE DETAILS, SEE SHEET 4 OF 4.

FOR WING DETAILS, SEE SHEET 3 OF 4.

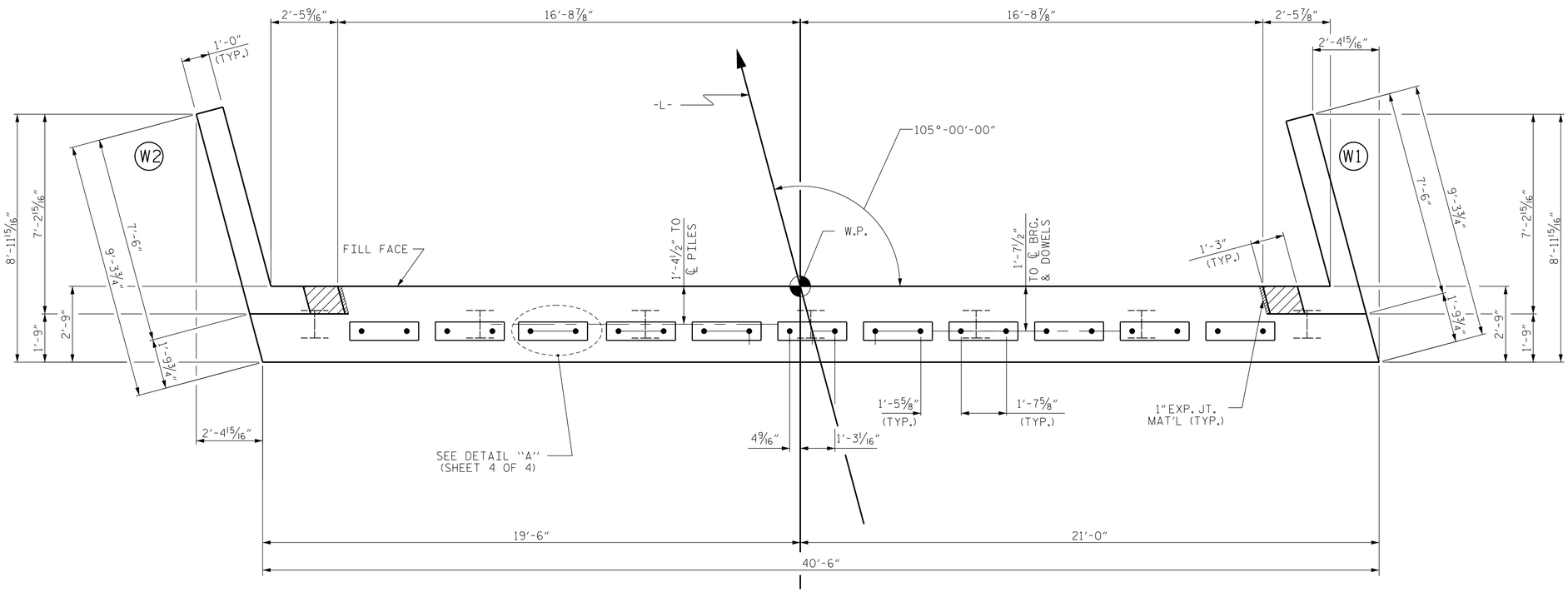

PLAN

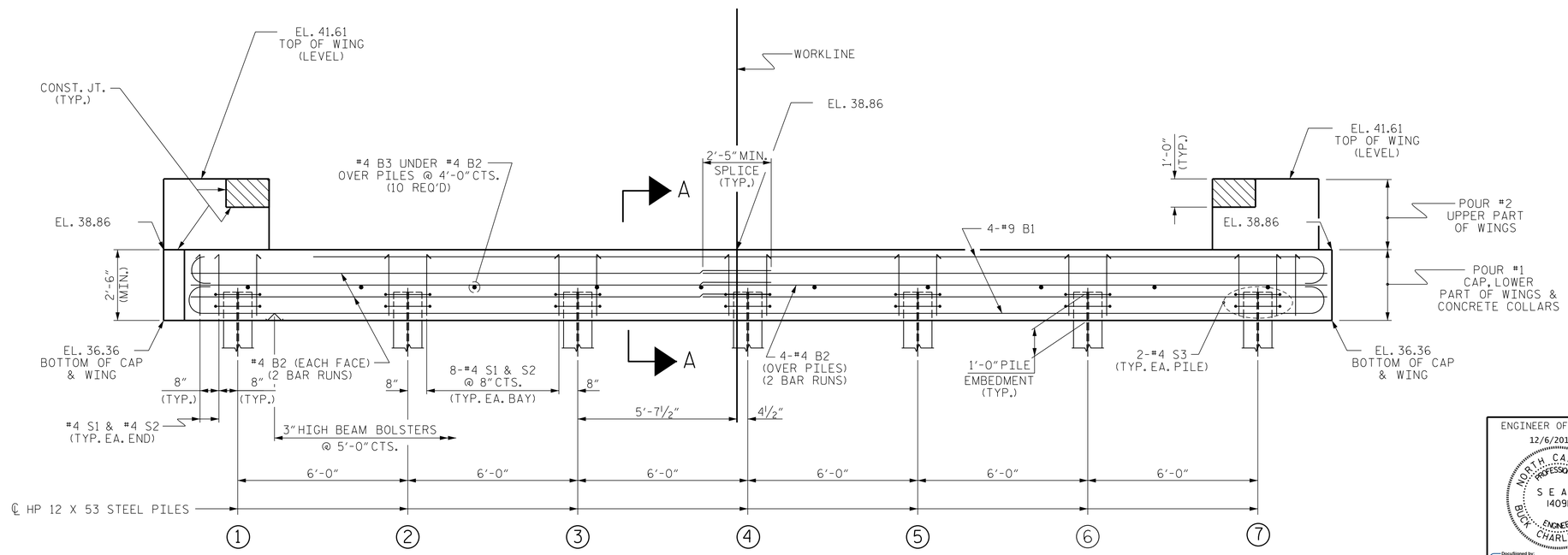

ELEVATION

WINGS NOT SHOWN FOR CLARITY.
FOR SECTION A-A, SEE SHEET 4 OF 4.
CONCRETE COLLARS FOR STEEL PILES NOT SHOWN IN PLAN AND ELEVATION VIEWS FOR CLARITY.
SEE "CORROSION PROTECTION FOR STEEL PILES DETAIL", SHEET 4 OF 4.

PROJECT NO. B-4563
JONES COUNTY
STATION: 16+94.00 -L-

SHEET 2 OF 4

STATE OF NORTH CAROLINA
DEPARTMENT OF TRANSPORTATION
RALEIGH

SUBSTRUCTURE

END BENT No. 2

ENGINEER OF RECORD
12/6/2017
NORTH CAROLINA PROFESSIONAL SEAL 14091 ENGINEER BUCK CHARLES HUNT
DocuSigned by: Buck Charles Hunt
2F15C83973BA4EC...

WETHERILL ENGINEERING
1223 Jones Franklin Rd.
Raleigh, N.C. 27606
Bus: 919 851 8077
Fax: 919 851 8107
LICENSE NO. F-0377

REVISIONS								SHEET NO.
NO.	BY:	DATE:	NO.	BY:	DATE:			S-13
1			3					TOTAL SHEETS
2			4					19

DOCUMENT NOT CONSIDERED FINAL UNLESS ALL SIGNATURES COMPLETED

ASSEMBLED BY :	M. SPARTZ	DATE :	6/17
CHECKED BY :	B.C. HUNT	DATE :	7/17
DRAWN BY :	DGE 01/10	REV. 4/15	MAA/TMG
CHECKED BY :	MKT 01/10		

P:\2017\17147.01_B-4563\Structures\DGN\B-4563_JONES_6_EBT.dgn
12/5/2017 2:30:41 PM

STD. NO. EB_33_105S

DocuSign Envelope ID: 37A8D76B-11E1-4FB9-9AFC-E0CBC84ACAB3

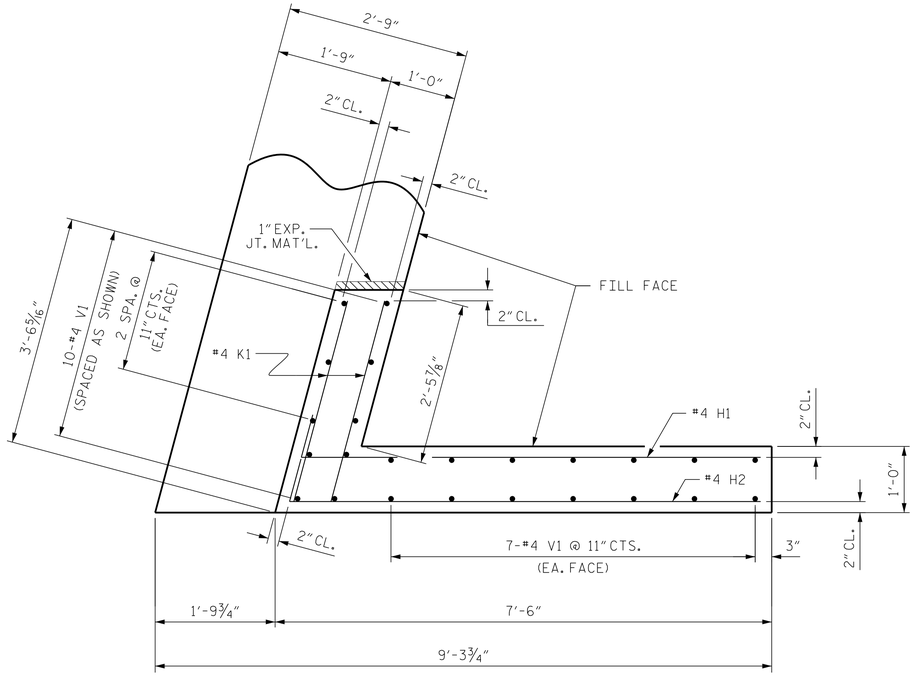

PLAN OF WING (W1)

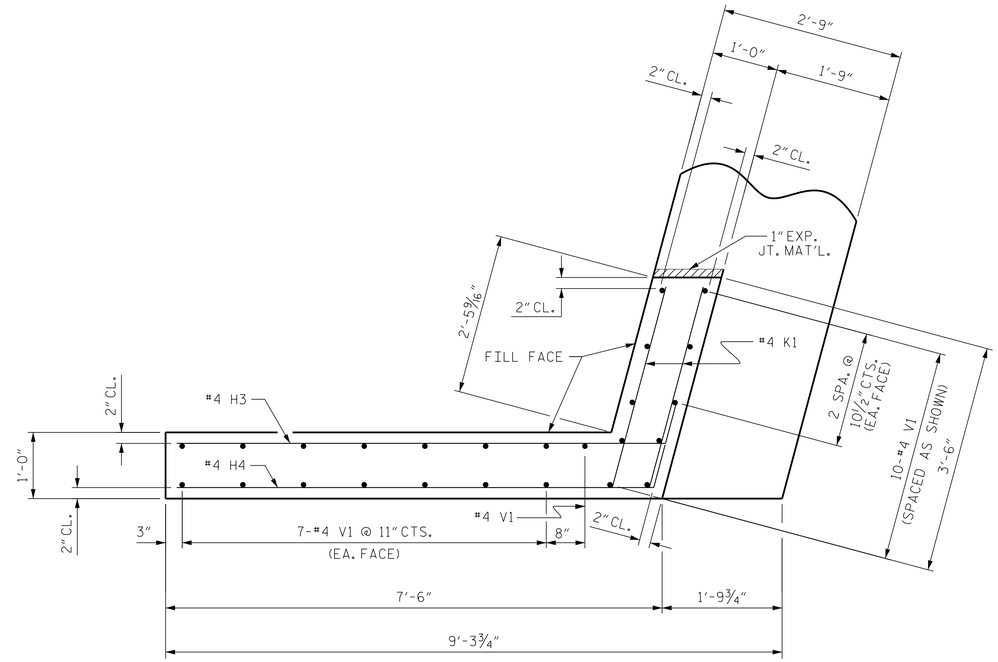

PLAN OF WING (W2)

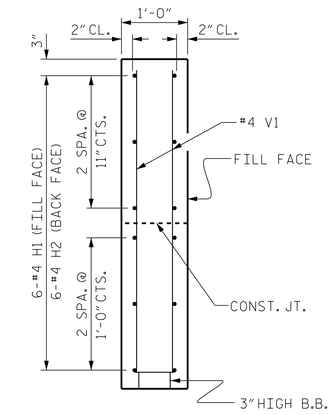

SECTION X-X

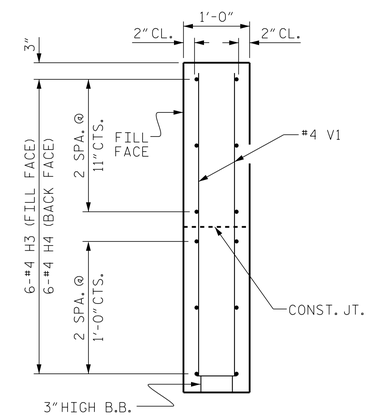

SECTION Y-Y

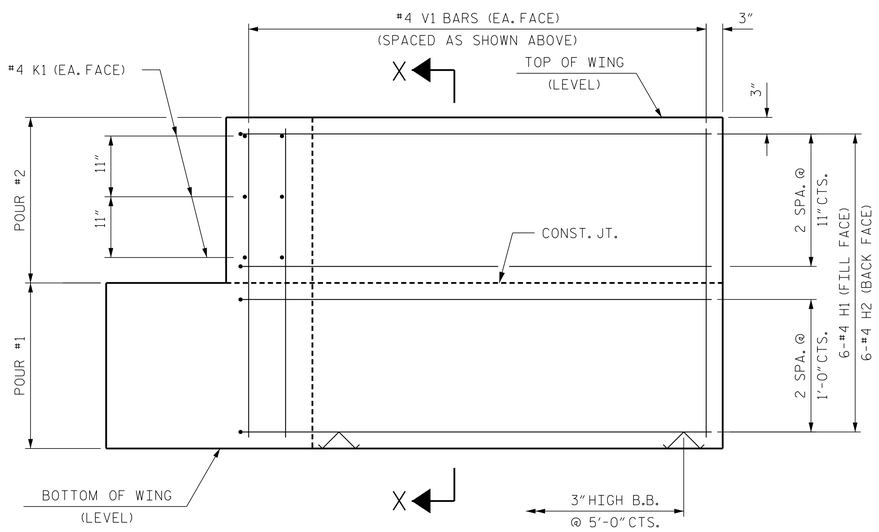

ELEVATION OF WING (W1)

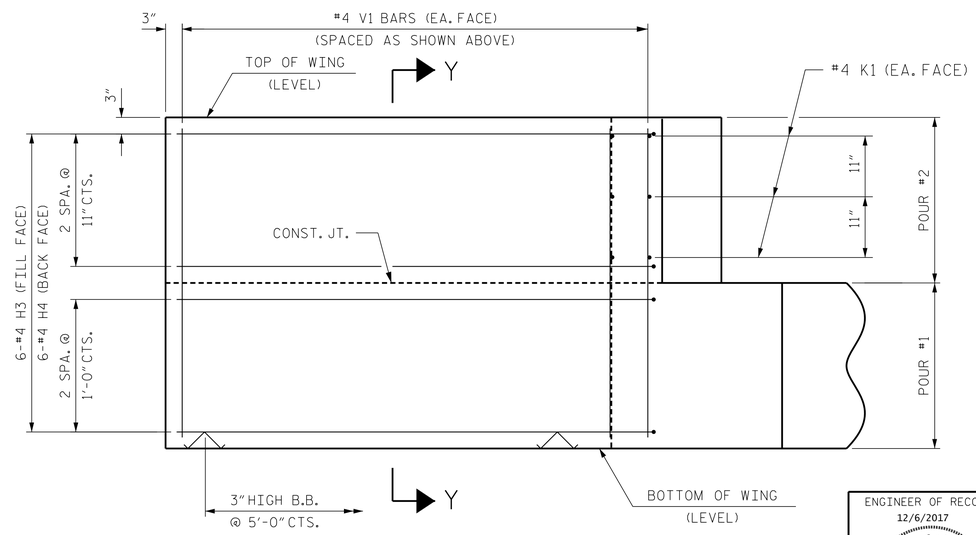

ELEVATION OF WING (W2)

WING DETAILS

PROJECT NO. B-4563

JONES COUNTY

STATION: 16+94.00 -L-

SHEET 3 OF 4

ASSEMBLED BY : M. SPARTZ	DATE : 6/17		
CHECKED BY : B.C. HUNT	DATE : 7/17		
DRAWN BY : DGF 2/10	DATE :	REV. 4/15	MAA/TMG
CHECKED BY : MKT 2/10	DATE :		

DOCUMENT NOT CONSIDERED FINAL UNLESS ALL SIGNATURES COMPLETED

ENGINEER OF RECORD
12/6/2017
NORTH CAROLINA PROFESSIONAL SEAL 14091 ENGINEER BUCK CHARLES HUNT
DocuSigned by: Buck Charles Hunt
2F15C83973BA4EC...

WETHERILL ENGINEERING
1223 Jones Franklin Rd.
Raleigh, N.C. 27606
Bus: 919 851 8077
Fax: 919 851 8107
LICENSE NO. F-0377

STATE OF NORTH CAROLINA
DEPARTMENT OF TRANSPORTATION
RALEIGH

SUBSTRUCTURE
END BENT
WING DETAILS

REVISIONS								SHEET NO.
NO.	BY:	DATE:	NO.	BY:	DATE:			S-14
1			3					TOTAL SHEETS
2			4					19

STD. NO. EB_33_105S

P:\2017\17147.01_B-4563\Structures\DGN\B-4563 JONES 6_EBT.dgn
12/5/2017 2:02:19 PM

DocuSign Envelope ID: 37A8D76B-11E1-4FB9-9AFC-E0CBC84ACAB3

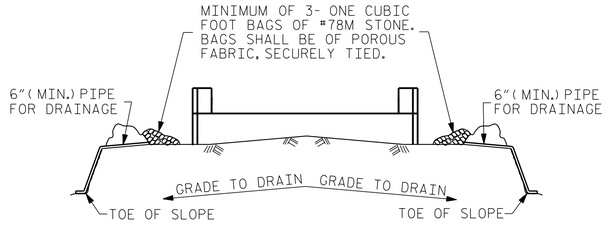

BAGGED STONE AND PIPE SHALL BE PLACED IMMEDIATELY AFTER COMPLETION OF END BENT EXCAVATION. PIPE MAY BE EITHER CONCRETE, CORRUGATED STEEL, CORRUGATED ALUMINUM ALLOY, OR CORRUGATED PLASTIC. PERFORATED PIPE WILL NOT BE ALLOWED.

BAGGED STONE SHALL REMAIN IN PLACE UNTIL THE ENGINEER DIRECTS THAT IT BE REMOVED. THE CONTRACTOR SHALL REMOVE AND DISPOSE OF SILT ACCUMULATIONS AT BAGGED STONE WHEN SO DIRECTED BY THE ENGINEER. BAGS SHALL BE REMOVED AND REPLACED WHENEVER THE ENGINEER DETERMINES THAT THEY HAVE DETERIORATED AND LOST THEIR EFFECTIVENESS.

NO SEPARATE PAYMENT WILL BE MADE FOR THIS WORK AND THE ENTIRE COST OF THIS WORK SHALL BE INCLUDED IN THE UNIT CONTRACT PRICE BID FOR THE SEVERAL PAY ITEMS.

TEMPORARY DRAINAGE AT END BENT

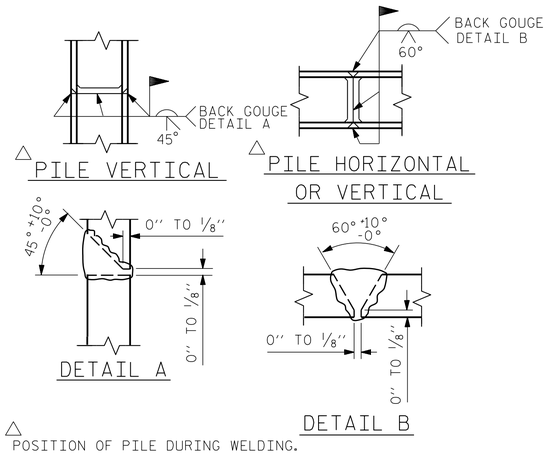

PILE SPLICE DETAILS

BAR TYPES

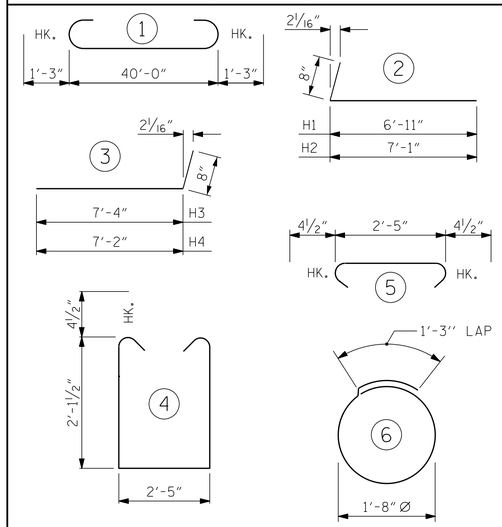

ALL BAR DIMENSIONS ARE OUT TO OUT.

END BENT No. 1	END BENT No. 2
HP 12 X 53 STEEL PILES NO: 7 LIN. FT.= 392	HP 12 X 53 STEEL PILES NO: 7 LIN. FT.= 427
PILE DRIVING EQUIPMENT SETUP FOR HP 12 X 53 STEEL PILES NO: 7	PILE DRIVING EQUIPMENT SETUP FOR HP 12 X 53 STEEL PILES NO: 7
PILE REDRIVES NO: 4	PILE REDRIVES NO: 4

BILL OF MATERIAL
FOR ONE END BENT

BAR	NO.	SIZE	TYPE	LENGTH	WEIGHT
B1	8	#9	1	42'-6"	1156
B2	16	#4	STR	21'-4"	228
B3	10	#4	STR	2'-5"	16
D1	22	#6	STR	1'-6"	50
H1	6	#4	2	7'-7"	30
H2	6	#4	2	7'-9"	31
H3	6	#4	3	8'-0"	32
H4	6	#4	3	7'-10"	31
K1	12	#4	STR	3'-1"	25
S1	52	#4	4	7'-5"	258
S2	52	#4	5	3'-2"	110
S3	14	#4	6	6'-6"	61
V1	49	#4	STR	4'-8"	153
REINFORCING STEEL (FOR ONE END BENT)					2181 LBS.

CONCRETE QUANTITIES

END BENT No. 1

CLASS A CONCRETE BREAKDOWN

POUR #1	CAP, LOWER PART OF WINGS & COLLARS	12.7 C.Y.
POUR #2	UPPER PART OF WINGS	1.8 C.Y.
TOTAL CLASS A CONCRETE		14.5 C.Y.

END BENT No. 2

CLASS A CONCRETE BREAKDOWN

POUR #1	CAP, LOWER PART OF WINGS & COLLARS	12.7 C.Y.
POUR #2	UPPER PART OF WINGS	2.0 C.Y.
TOTAL CLASS A CONCRETE		14.7 C.Y.

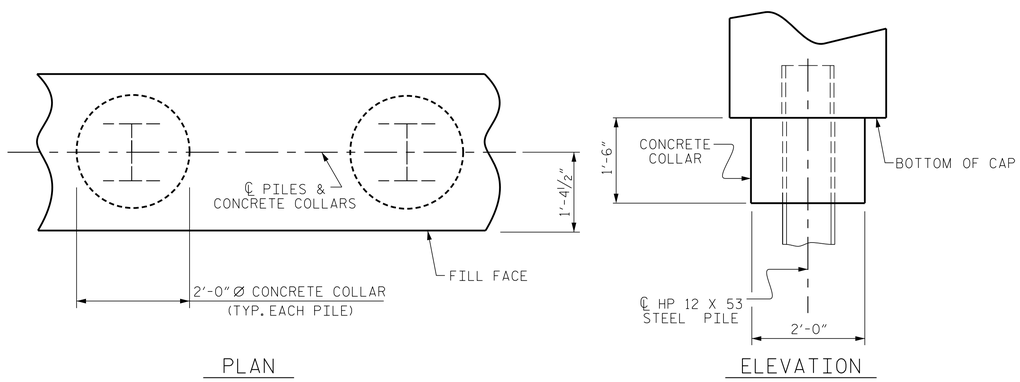

CORROSION PROTECTION FOR STEEL PILES DETAIL

(END BENT No. 1 SHOWN, END BENT No. 2 SIMILAR BY ROTATION)

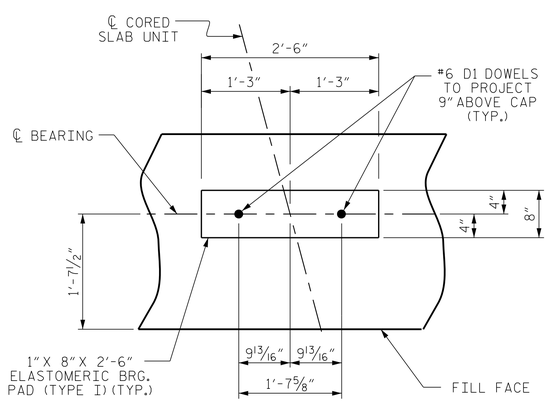

DETAIL "A"

(END BENT No. 1 SHOWN, END BENT No. 2 SIMILAR BY ROTATION)

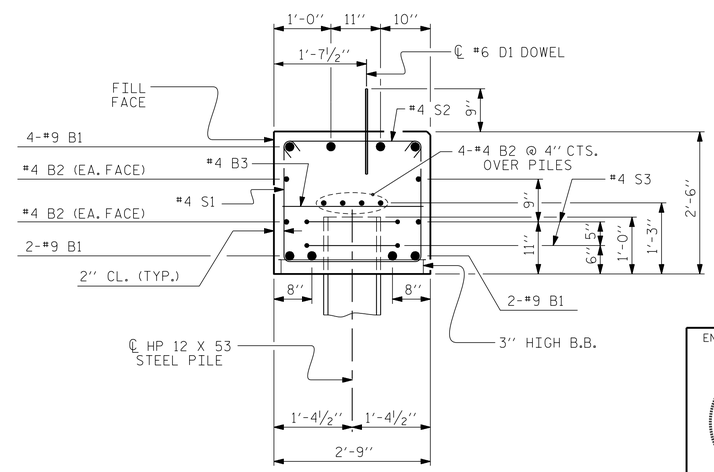

SECTION A-A

(CONCRETE COLLAR NOT SHOWN FOR CLARITY. SEE "CORROSION PROTECTION FOR STEEL PILES DETAIL.")

PROJECT NO. B-4563
JONES COUNTY
STATION: 16+94.00 -L-

SHEET 4 OF 4

ENGINEER OF RECORD
12/6/2017
NORTH CAROLINA PROFESSIONAL SEAL 14091 ENGINEER BUCK CHARLES HUNT

Docusigned by: Buck Charles Hunt
2F15C83973BA4E0...

WETHERILL ENGINEERING
1223 Jones Franklin Rd.
Raleigh, N.C. 27606
Bus: 919 851 8077
Fax: 919 851 8107
LICENSE NO. F-0377

STATE OF NORTH CAROLINA
DEPARTMENT OF TRANSPORTATION
RALEIGH

SUBSTRUCTURE

END BENT No. 1 & 2 DETAILS

REVISIONS						
NO.	BY:	DATE:	NO.	BY:	DATE:	
1			3			
2			4			

SHEET NO. S-15
TOTAL SHEETS 19

ASSEMBLED BY :	M. SPARTZ	DATE :	6/17
CHECKED BY :	B.C. HUNT	DATE :	7/17
DRAWN BY :	DGE 12/09	REV. 4/15	MAA/TMG
CHECKED BY :	MKT 01/10		

DOCUMENT NOT CONSIDERED FINAL UNLESS ALL SIGNATURES COMPLETED

P:\2017\17147.01_B-4563\Structures\DGN\B-4563 JONES 6_EBT.dgn
12/5/2017 2:03:48 PM

STD. NO. EB_33_105S

DocuSign Envelope ID: 37A8D76B-11E1-4FB9-9AFC-E0CBC84ACAB3

NOTES

STIRRUPS IN CAP MAY BE SHIFTED AS NECESSARY TO CLEAR DOWELS.

★ INVERT ALTERNATE STIRRUPS.

GALVANIZE THE TOP OF EACH INTERIOR BENT PILE A MINIMUM OF 26 FEET. GALVANIZE IN ACCORDANCE WITH SECTION 1076 OF THE STANDARD SPECIFICATIONS.

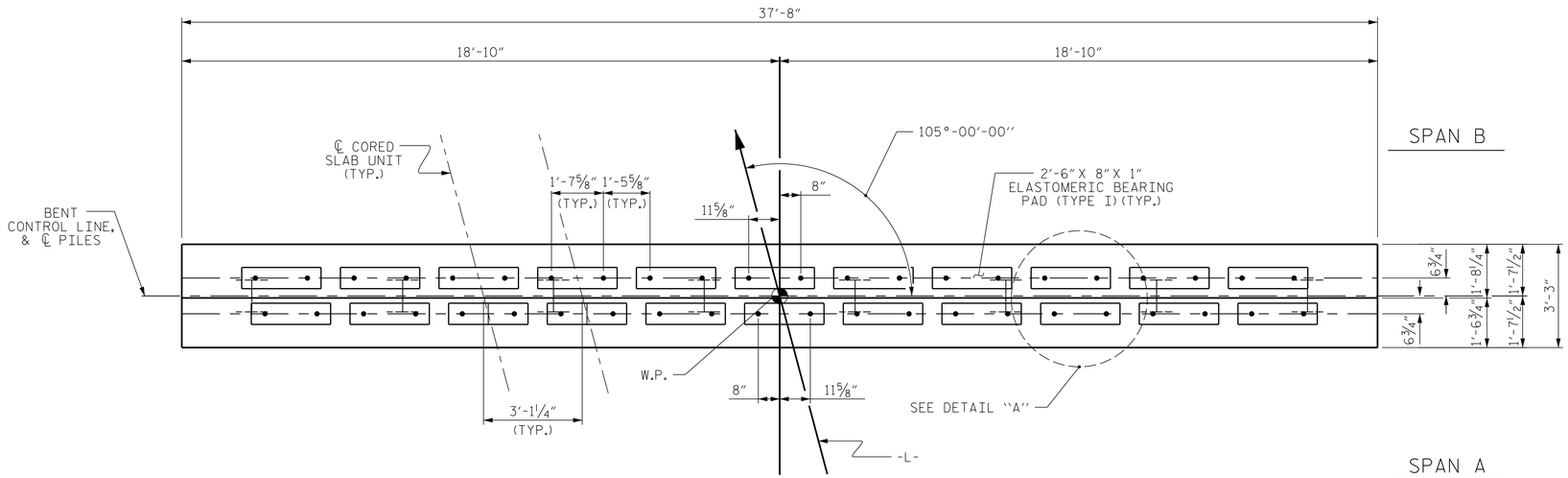

PLAN

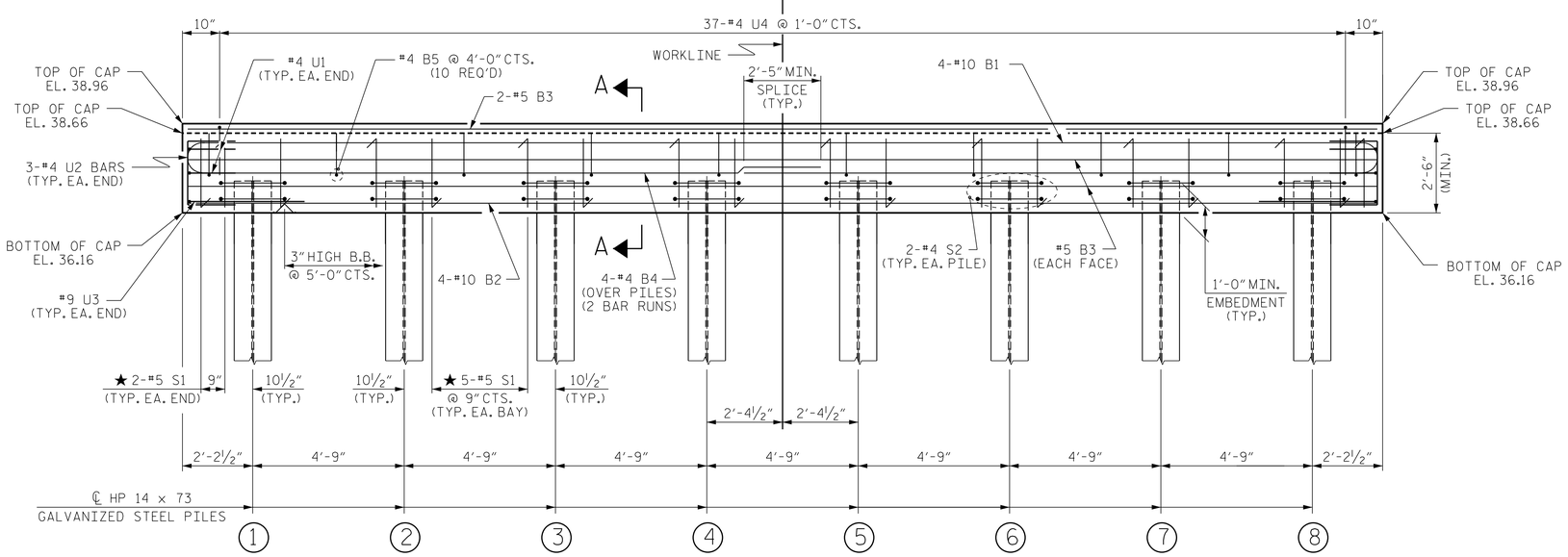

ELEVATION

FOR SECTION A-A, SEE SHEET 2 OF 2

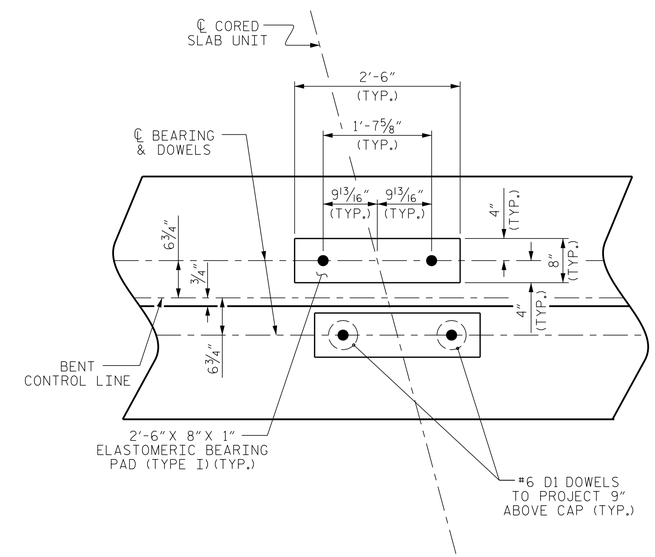

DETAIL "A"

(DIMENSIONS ARE TYPICAL EACH BEARING)

PROJECT NO. B-4563

JONES COUNTY

STATION: 16+94.00 -L-

SHEET 1 OF 2

ENGINEER OF RECORD
12/6/2017
NORTH CAROLINA PROFESSIONAL SEAL 14091 ENGINEER BUCK CHARLES HUNT

DocuSigned by: Buck Charles Hunt
2F15C83973BA4EC...

WETHERILL ENGINEERING
1223 Jones Franklin Rd.
Raleigh, N.C. 27606
Bus: 919 851 8077
Fax: 919 851 8107
LICENSE NO. F-0377

STATE OF NORTH CAROLINA
DEPARTMENT OF TRANSPORTATION
RALEIGH

SUBSTRUCTURE

BENT No. 1

REVISIONS						SHEET NO.
NO.	BY:	DATE:	NO.	BY:	DATE:	S-16
1			3			TOTAL SHEETS
2			4			19

DOCUMENT NOT CONSIDERED FINAL UNLESS ALL SIGNATURES COMPLETED

ASSEMBLED BY : M. SPARTZ		DATE : 9/17	
CHECKED BY : B.C. HUNT		DATE : 9/17	
DRAWN BY : DGE 05/10	REV. 6/17	MAA/THC	
CHECKED BY : MKT 05/10			

P:\2017\17147.01_B-4563\Structures\DGN\B-4563_JONES_6_BT.dgn
12/5/2017 2:06:18 PM

STD. NO. 14" HP_BT_33_105S_<60'

DocuSign Envelope ID: 37A8D76B-11E1-4FB9-9AFC-E0CBC84ACAB3

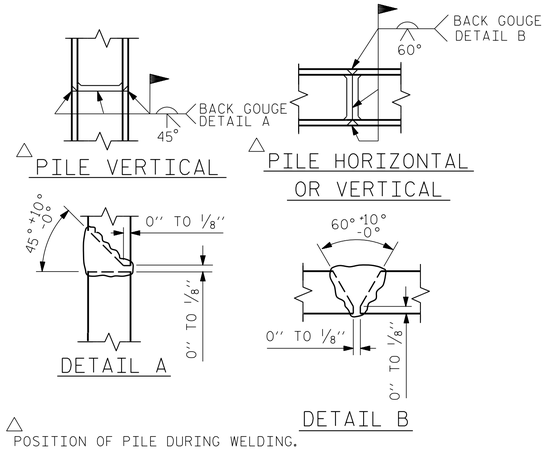

PILE SPLICE DETAILS

BAR TYPES

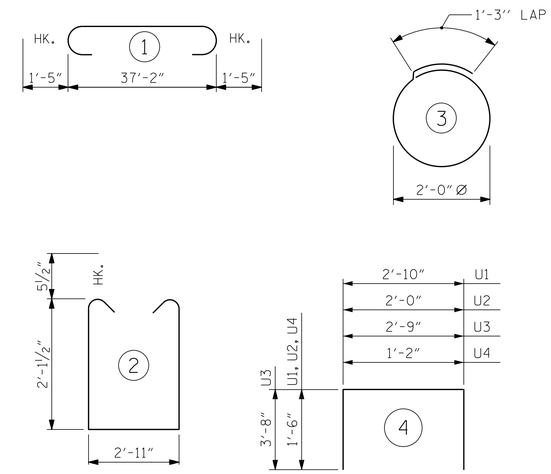

ALL BAR DIMENSIONS ARE OUT TO OUT.

BILL OF MATERIAL
FOR ONE BENT

BAR	NO.	SIZE	TYPE	LENGTH	WEIGHT
B1	4	#10	1	40'-0"	688
B2	4	#10	STR	37'-4"	643
B3	6	#5	STR	37'-4"	234
B4	8	#4	STR	19'-11"	106
B5	10	#4	STR	2'-11"	19
D1	44	#6	STR	1'-6"	99
S1	39	#5	2	8'-1"	329
S2	16	#4	3	7'-7"	81
U1	4	#4	4	5'-10"	16
U2	6	#4	4	5'-0"	20
U3	2	#9	4	10'-1"	69
U4	37	#4	4	4'-2"	103

REINFORCING STEEL (FOR ONE BENT) 2407 LBS

CLASS A CONCRETE BREAKDOWN (FOR ONE BENT)

TOTAL CLASS A CONCRETE 12.0 C.Y.

HP 14 X 73 GALVANIZED STEEL PILES (FOR ONE BENT)

No. 8 LIN. FT. 608

PILE DRIVING EQUIPMENT SETUP FOR HP 14 X 73 GALVANIZED STEEL PILES (FOR ONE BENT) NO: 8

PILE REDRIVES NO: 4

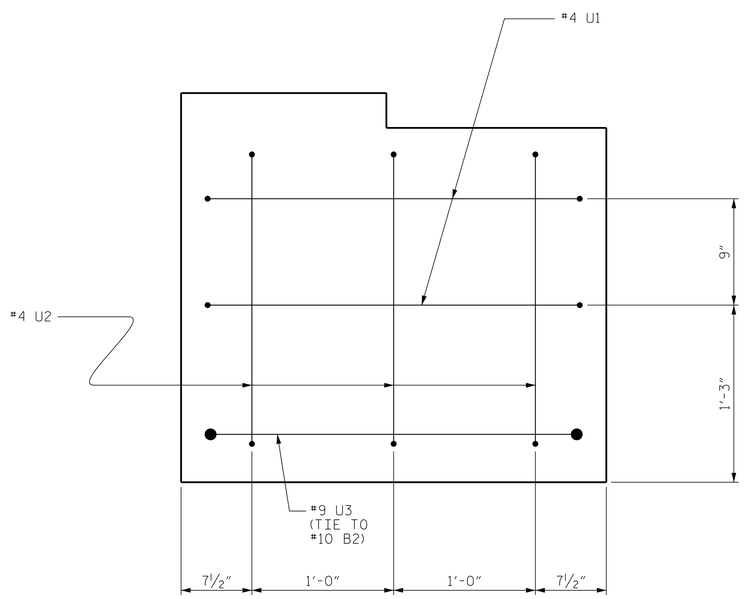

END OF CAP VIEW
(SIMILAR BOTH ENDS)

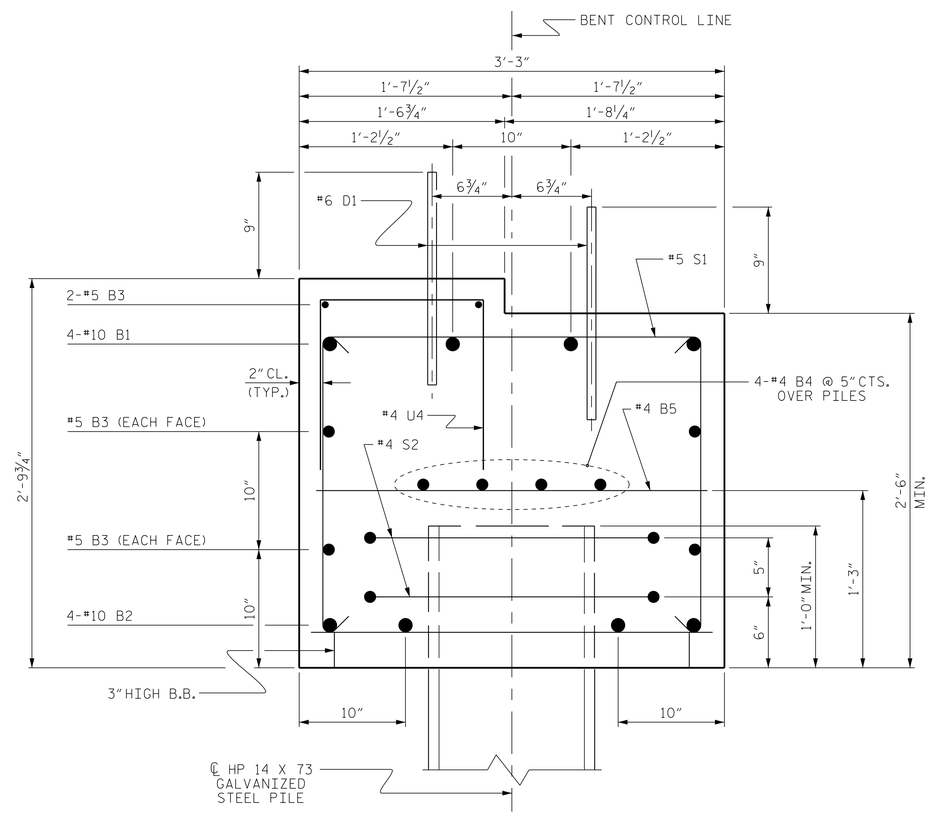

SECTION A-A

PROJECT NO. B-4563

JONES COUNTY

STATION: 16+94.00 -L-

SHEET 2 OF 2

ENGINEER OF RECORD
12/6/2017
NORTH CAROLINA PROFESSIONAL SEAL 14091 ENGINEER BUCK CHARLES HUNT
DocuSigned by: Buck Charles Hunt
2F15C83973BA4EC...

WETHERILL ENGINEERING
1223 Jones Franklin Rd.
Raleigh, N.C. 27606
Bus: 919 851 8077
Fax: 919 851 8107
LICENSE NO. F-0377

STATE OF NORTH CAROLINA
DEPARTMENT OF TRANSPORTATION
RALEIGH

SUBSTRUCTURE

BENT No. 1

REVISIONS						SHEET NO.
NO.	BY:	DATE:	NO.	BY:	DATE:	S-17
1			3			TOTAL SHEETS
2			4			19

DOCUMENT NOT CONSIDERED FINAL UNLESS ALL SIGNATURES COMPLETED

ASSEMBLED BY :	M. SPARTZ	DATE :	9/17
CHECKED BY :	B.C. HUNT	DATE :	9/17
DRAWN BY :	DGE 05/10	DATE :	
CHECKED BY :	MKT 05/10	DATE :	

REV. 6/17 MAA/THC

P:\2017\17147.01_B-4563\Structures\DGN\B-4563 JONES 6_BT.dgn
12/5/2017 2:11:57 PM

STD. NO. 14" HP_BT_33_75&105S_<60'

DocuSign Envelope ID: 37A8D76B-11E1-4FB9-9AFC-E0CBC84ACAB3

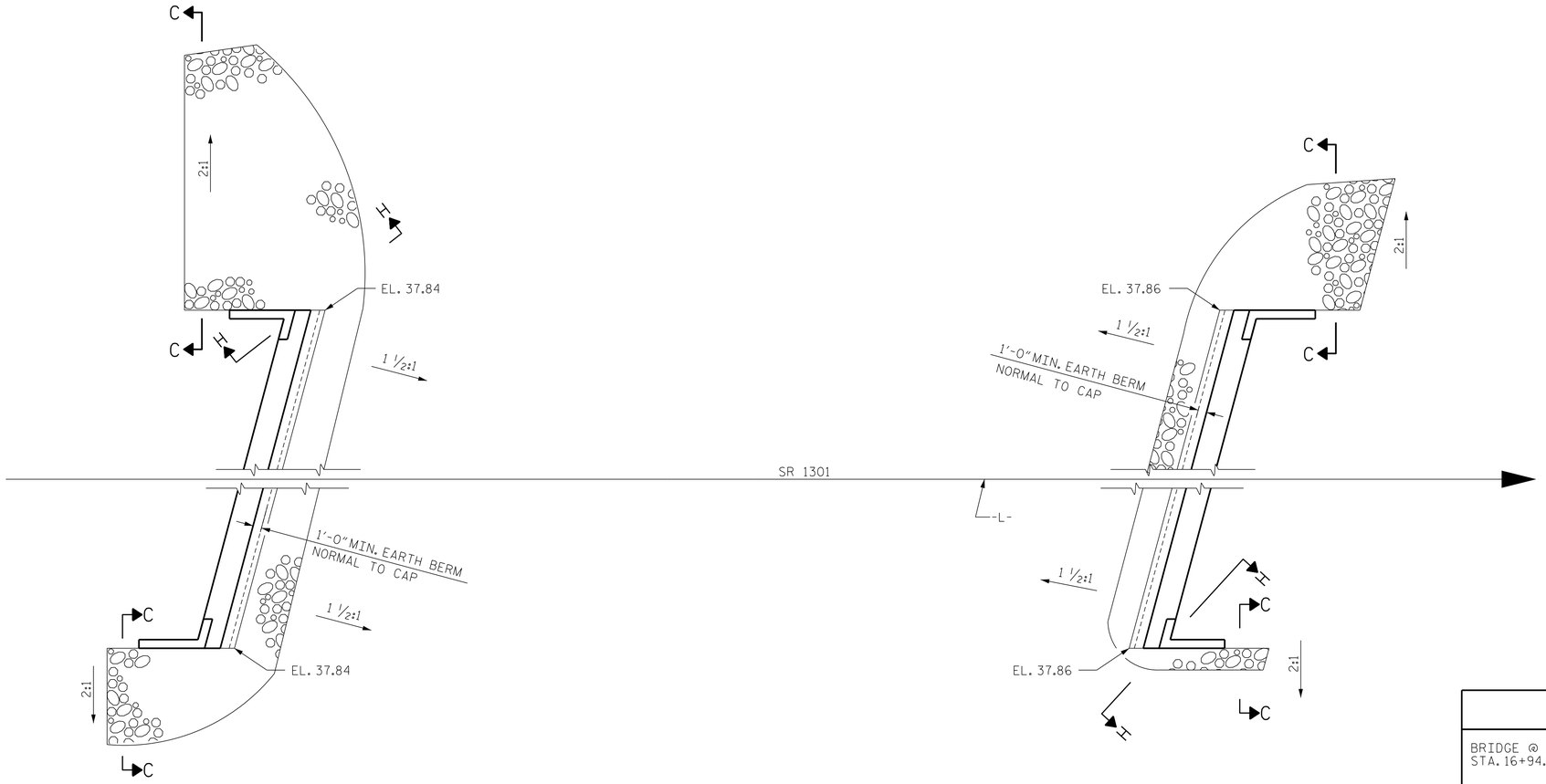

PLAN OF RIP RAP

ESTIMATED QUANTITIES		
BRIDGE @ STA. 16+94.00 -L-	RIP RAP CLASS II (2'-0" THICK)	GEOTEXTILE FOR DRAINAGE
	TONS	SQUARE YARDS
END BENT 1	115	130
END BENT 2	60	65

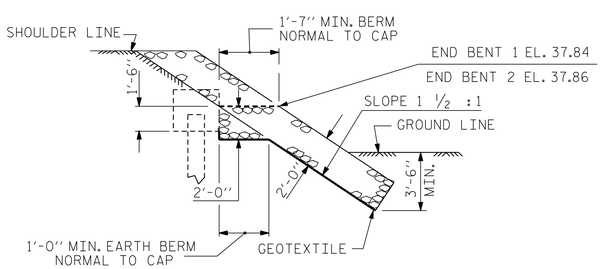

SECTION H-H

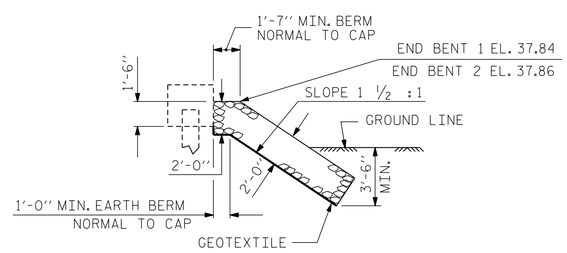

℄ SECTION
BERM RIP RAPPED

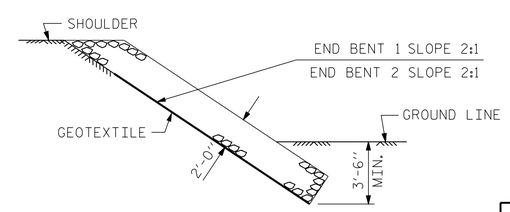

SECTION C-C

PROJECT NO. B-4563
JONES COUNTY
STATION: 16+94.00 -L-

ENGINEER OF RECORD
12/6/2017
NORTH CAROLINA PROFESSIONAL SEAL 14091 ENGINEER BUCK CHARLES HURT
DocuSigned by: Buck Charles Hurt
2F15C83973BA48...
WETHERILL ENGINEERING
1223 Jones Franklin Rd.
Raleigh, N.C. 27606
Bus: 919 851 8077
Fax: 919 851 8107
LICENSE NO. F-0377

STATE OF NORTH CAROLINA
DEPARTMENT OF TRANSPORTATION
RALEIGH

STANDARD
-RIP RAP DETAILS-

REVISIONS						
NO.	BY:	DATE:	NO.	BY:	DATE:	
1			3			
2			4			

SHEET NO. S-18
TOTAL SHEETS 19

DOCUMENT NOT CONSIDERED FINAL UNLESS ALL SIGNATURES COMPLETED

ASSEMBLED BY :	M. SPARTZ	DATE :	6/17
CHECKED BY :	G.M. GILLAND	DATE :	7/17
DRAWN BY :	REK 1/84	REV. 5/1/06R	TLA/GM
CHECKED BY :	RDU 1/84	REV. 10/1/11	MAA/GM
		REV. 12/21/11	MAA/GM

P:\2017\17147.01_B-4563\Structures\DGN\B-4563 JONES 6_SP.dgn
12/5/2017 2:13:40 PM

STD. NO. RR1

DocuSign Envelope ID: 37A8D76B-11E1-4FB9-9AFC-E0CBC84ACAB3

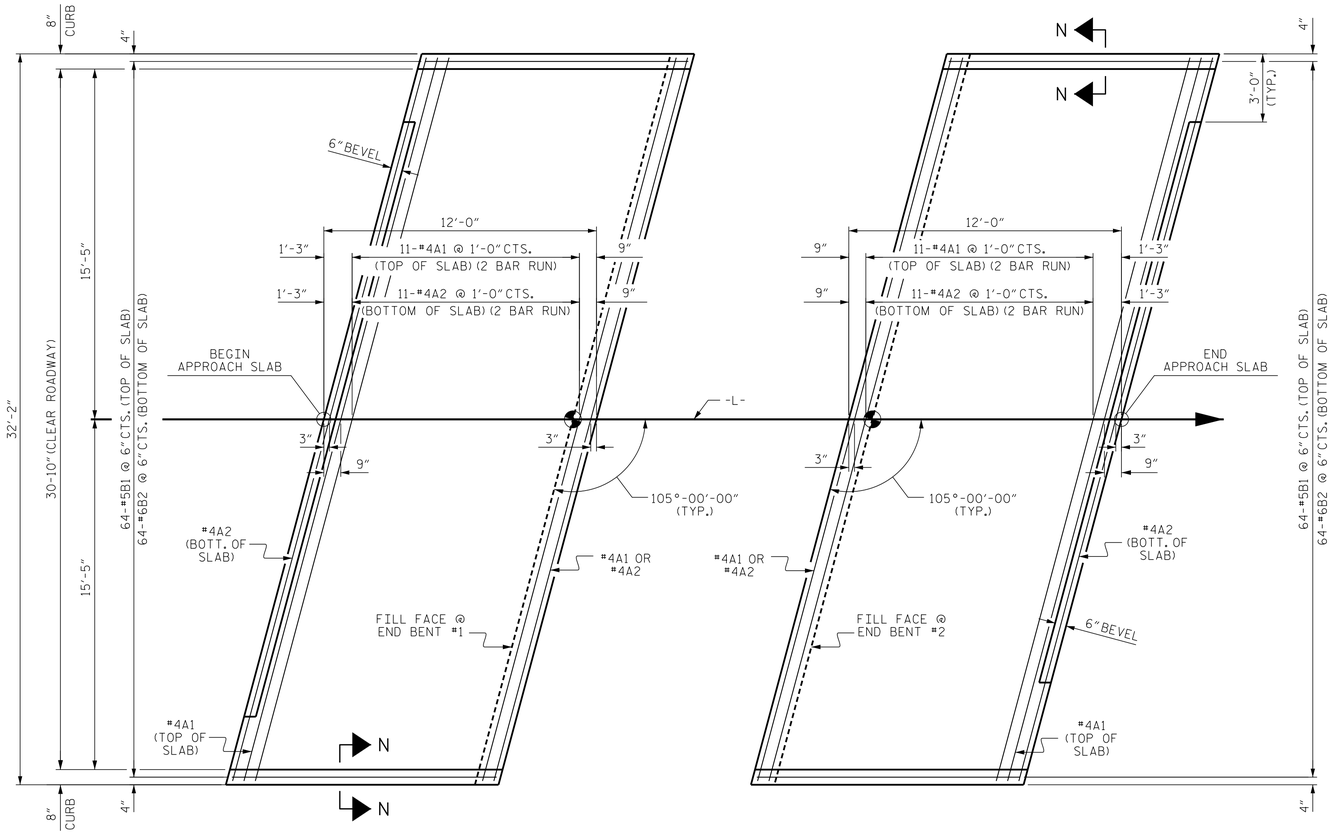

PLAN @ END BENT #1

PLAN @ END BENT #2

DIMENSIONS SHOWN ARE TYPICAL FOR BOTH APPROACH SLABS

NOTES

FOR BRIDGE APPROACH FILL INCLUDING GEOTEXTILE, 4" Ø DRAINAGE PIPE, AND SELECT MATERIAL BACKFILL, SEE ROADWAY PLANS.

GEOTEXTILE SHALL BE TYPE 1 IN ACCORDANCE WITH THE STANDARD SPECIFICATIONS SECTION 1056.

SELECT MATERIAL BACKFILL (CLASS V OR CLASS VI) SHALL BE IN ACCORDANCE WITH STANDARD SPECIFICATIONS SECTION 1016.

SELECT MATERIAL BACKFILL IS TO BE CONTINUOUS ALONG FILL FACE OF BACKWALL FROM OUTSIDE EDGE TO OUTSIDE EDGE OF APPROACH SLAB.

FOR THE 4" Ø DRAINAGE PIPE OUTLET(S), SEE ROADWAY STANDARD DRAWINGS.

AREA BETWEEN THE WINGWALL AND APPROACH SLAB SHALL BE GRADED TO DRAIN THE WATER AWAY FROM THE FILL FACE OF THE BRIDGE AND SHALL BE PAVED. SEE ROADWAY PLANS.

APPROACH SLAB GROOVING IS NOT REQUIRED.

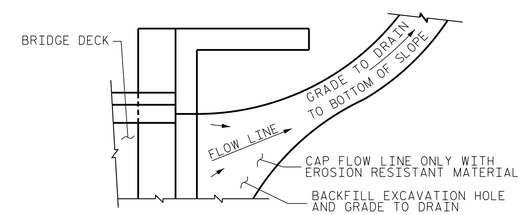

NOTE: IF THE APPROACH SLAB IS NOT CONSTRUCTED IMMEDIATELY AFTER THE BACKFILLING OF THE END BENT EXCAVATION, GRADE TO DRAIN TO THE BOTTOM OF THE SLOPE AND PROVIDE EROSION RESISTANT MATERIAL, SUCH AS FIBERGLASS ROVING OR AS DIRECTED BY THE ENGINEER TO PREVENT SOIL EROSION AND TO PROTECT THE AREA ADJACENT TO THE STRUCTURE. THE CONTRACTOR WILL BE REQUIRED TO REMOVE THESE MATERIALS PRIOR TO CONSTRUCTION OF THE APPROACH SLAB.

TEMPORARY DRAINAGE DETAIL

BILL OF MATERIAL

APPROACH SLAB AT EB #1

BAR	NO.	SIZE	TYPE	LENGTH	WEIGHT
* A1	26	#4	STR	17'-6"	304
A2	26	#4	STR	17'-5"	302
* B1	64	#5	STR	11'-1"	740
B2	64	#6	STR	11'-7"	1113
REINFORCING STEEL				LBS.	1415
* EPOXY COATED REINFORCING STEEL				LBS.	1044
CLASS AA CONCRETE				C. Y.	18.4

APPROACH SLAB AT EB #2

BAR	NO.	SIZE	TYPE	LENGTH	WEIGHT
* A1	26	#4	STR	17'-6"	304
A2	26	#4	STR	17'-5"	302
* B1	64	#5	STR	11'-1"	740
B2	64	#6	STR	11'-7"	1113
REINFORCING STEEL				LBS.	1415
* EPOXY COATED REINFORCING STEEL				LBS.	1044
CLASS AA CONCRETE				C. Y.	19.5

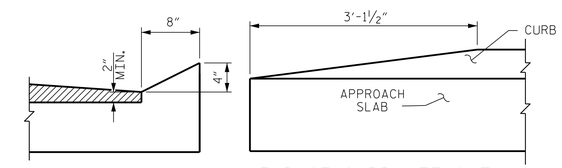

SECTION N-N

END OF CURB WITHOUT SHOULDER BERM GUTTER

CURB DETAILS

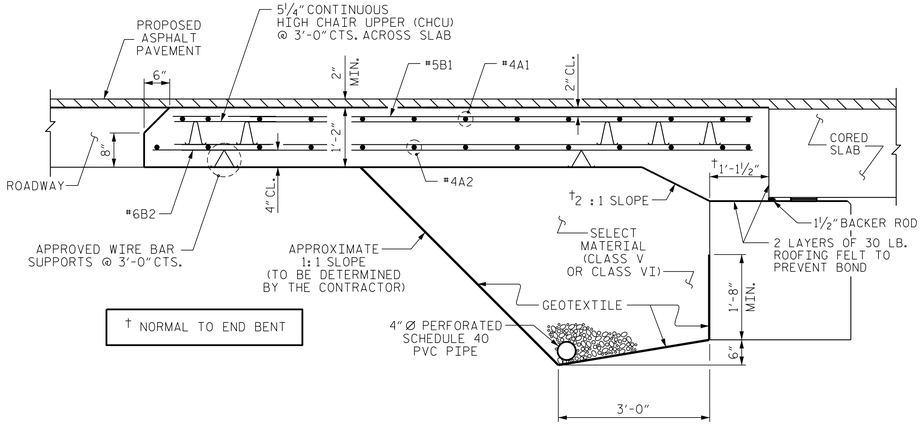

† NORMAL TO END BENT

SECTION THRU SLAB

(TYPE II - MODIFIED APPROACH FILL)

SPLICE LENGTHS		
BAR SIZE	EPOXY COATED	UNCOATED
#4	2'-0"	1'-9"
#5	2'-6"	2'-2"
#6	3'-10"	2'-7"

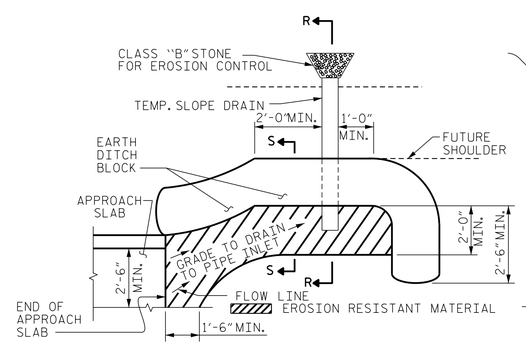

NOTE: IMMEDIATELY AFTER THE CONSTRUCTION OF THE APPROACH SLAB, THE CONTRACTOR SHALL PROVIDE TEMPORARY BERM AND SLOPE DRAIN. CONTRACTOR SHALL GRADE TO PIPE INLET AND PROVIDE EROSION RESISTANT MATERIAL AS SHOWN. THE EROSION RESISTANT MATERIAL SHALL BE EITHER 1) ASPHALT PLANT MIX, TYPE 1 OR TYPE 2, MIN. 2" DEPTH, 2) EROSION CONTROL MAT, OR 3) CONCRETE, AS DIRECTED BY THE ENGINEER. THE SLOPE DRAIN SHALL CONSIST OF A NON-PERFORATED TEMPORARY DRAINAGE PIPE, 12 INCHES IN DIAMETER.

PLAN VIEW

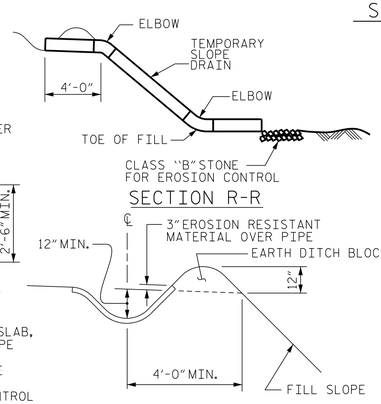

SECTION S-S

TEMPORARY BERM AND SLOPE DRAIN DETAILS

(TO BE USED WHEN SHOULDER BERM GUTTER IS REQUIRED)

PROJECT NO. B-4563

JONES COUNTY

STATION: 16+94.00 -L-

ENGINEER OF RECORD
12/6/2017
NORTH CAROLINA PROFESSIONAL SEAL 14091 ENGINEER BUCK CHARLES HUNT

DocuSigned by: Buck Charles Hunt
2F15C83973BA4E4...

ETHERILL ENGINEERING
1223 Jones Franklin Rd.
Raleigh, N.C. 27606
Bus: 919 851 8077
Fax: 919 851 8107
LICENSE NO. F-0377

STATE OF NORTH CAROLINA
DEPARTMENT OF TRANSPORTATION
RALEIGH

STANDARD
BRIDGE APPROACH SLAB
FOR PRESTRESSED CONCRETE
CORED SLAB UNIT
(SUB REGIONAL TIER)
105° SKEW

REVISIONS						SHEET NO.
NO.	BY:	DATE:	NO.	BY:	DATE:	S-19
1			3			TOTAL SHEETS
2			4			19

DRAWN BY : M. SPARTZ DATE : 6/17
CHECKED BY : G.M. GILLAND DATE : 7/17
DRAWN BY : SHS/MAA 5-09
CHECKED BY : BCH 5-09
REV. 9-15 MAA/TMG

DOCUMENT NOT CONSIDERED FINAL UNLESS ALL SIGNATURES COMPLETED

STD. NO. BAS_33_105S

P:\2017\17147.01_B-4563\Structures\DGN\B-4563 JONES 6_AS.dgn
12/5/2017 2:17:53 PM

DocuSign Envelope ID: 37A8D76B-11E1-4FB9-9AFC-E0CBC84ACAB3

STANDARD NOTES

DESIGN DATA:

SPECIFICATIONS	A.A.S.H.T.O. (CURRENT)
LIVE LOAD	SEE PLANS
IMPACT ALLOWANCE	SEE A.A.S.H.T.O.
STRESS IN EXTREME FIBER OF STRUCTURAL STEEL - AASHTO M270 GRADE 36	20,000 LBS. PER SQ. IN.
- AASHTO M270 GRADE 50W	27,000 LBS. PER SQ. IN.
- AASHTO M270 GRADE 50	27,000 LBS. PER SQ. IN.
REINFORCING STEEL IN TENSION - GRADE 60	24,000 LBS. PER SQ. IN.
CONCRETE IN COMPRESSION	1,200 LBS. PER SQ. IN.
CONCRETE IN SHEAR	SEE A.A.S.H.T.O.
STRUCTURAL TIMBER - TREATED OR UNTREATED EXTREME FIBER STRESS	1,800 LBS. PER SQ. IN.
COMPRESSION PERPENDICULAR TO GRAIN OF TIMBER	375 LBS. PER SQ. IN.
EQUIVALENT FLUID PRESSURE OF EARTH	30 LBS. PER CU. FT. (MINIMUM)

MATERIAL AND WORKMANSHIP:

EXCEPT AS MAY OTHERWISE BE SPECIFIED ON PLANS OR IN THE SPECIAL PROVISIONS, ALL MATERIAL AND WORKMANSHIP SHALL BE IN ACCORDANCE WITH THE 2018 "STANDARD SPECIFICATIONS FOR ROADS AND STRUCTURES" OF THE N. C. DEPARTMENT OF TRANSPORTATION.

STEEL SHEET PILING FOR PERMANENT OR TEMPORARY APPLICATIONS SHALL BE HOT ROLLED.

CONCRETE:

UNLESS OTHERWISE REQUIRED ON PLANS, CLASS A CONCRETE SHALL BE USED FOR ALL PORTIONS OF ALL STRUCTURES WITH THE EXCEPTION THAT: CLASS AA CONCRETE SHALL BE USED IN BRIDGE SUPERSTRUCTURES, ABUTMENT BACKWALLS, AND APPROACH SLABS; AND CLASS B CONCRETE SHALL BE USED FOR SLOPE PROTECTION AND RIP RAP.

CONCRETE CHAMFERS:

UNLESS OTHERWISE NOTED ON THE PLANS, ALL EXPOSED CORNERS ON STRUCTURES SHALL BE CHAMFERED 3/4" WITH THE FOLLOWING EXCEPTIONS: TOP CORNERS OF CURBS MAY BE ROUNDED TO 1 1/2" RADIUS WHICH IS BUILT INTO CURB FORMS; CORNERS OF TRANSVERSE FLOOR EXPANSION JOINTS SHALL BE ROUNDED WITH A 1/4" FINISHING TOOL UNLESS OTHERWISE REQUIRED ON PLANS; AND CORNERS OF EXPANSION JOINTS IN THE ROADWAY FACES AND TOPS OF CURBS AND SIDEWALKS SHALL BE ROUNDED TO A 1/4" RADIUS WITH A FINISHING STONE OR TOOL UNLESS OTHERWISE REQUIRED ON PLANS.

DOWELS:

DOWELS WHEN INDICATED ON PLANS AS FOR CULVERT EXTENSIONS, SHALL BE EMBEDDED AT LEAST 12" INTO THE OLD CONCRETE AND GROUTED INTO PLACE WITH 1:2 CEMENT MORTAR.

ALLOWANCE FOR DEAD LOAD DEFLECTION, SETTLEMENT, ETC. IN CASTING SUPERSTRUCTURES:

BRIDGES SHALL BE BUILT ON THE GRADE OR VERTICAL CURVE SHOWN ON PLANS. SLABS, CURBS AND PARAPETS SHALL CONFORM TO THE GRADE OR CURVE.

ALL DIMENSIONS WHICH ARE GIVEN IN SECTION AND ARE AFFECTED BY DEAD LOAD DEFLECTIONS ARE DIMENSIONS AT CENTER LINE OF BEARING UNLESS OTHERWISE NOTED ON PLANS. IN SETTING FORMS FOR STEEL BEAM BRIDGES AND PRESTRESSED CONCRETE GIRDER BRIDGES, ADJUSTMENTS SHALL BE MADE DUE TO THE DEAD LOAD DEFLECTIONS FOR THE ELEVATIONS SHOWN. WHERE BLOCKS ARE SHOWN OVER BEAMS FOR BUILDING UP TO THE SLAB, THE VERTICAL DIMENSIONS OF THE BLOCKS SHALL BE ADJUSTED BETWEEN BEARINGS TO COMPENSATE FOR DEAD LOAD DEFLECTIONS, VERTICAL CURVE ORDINATE, AND ACTUAL BEAM CAMBER. WHERE BOTTOM OF SLAB IS IN LINE WITH BOTTOM OF TOP FLANGES, DEPTH OF SLAB BETWEEN BEARINGS SHALL BE ADJUSTED TO COMPENSATE FOR DEAD LOAD DEFLECTION, VERTICAL CURVE ORDINATE, AND ACTUAL BEAM CAMBER.

IN SETTING FALSEWORK AND FORMS FOR REINFORCED CONCRETE SPANS, AN ALLOWANCE SHALL BE MADE FOR DEAD LOAD DEFLECTIONS, SETTLEMENT OF FALSEWORK, AND PERMANENT CAMBER WHICH SHALL BE PROVIDED FOR IN ADDITION TO THE ELEVATIONS SHOWN. AFTER REMOVAL OF THE FALSEWORK, THE FINISHED STRUCTURES SHALL CONFORM TO THE PROFILE AND ELEVATIONS SHOWN ON THE PLANS AND CONSTRUCTION ELEVATIONS FURNISHED BY THE ENGINEER.

DETAILED DRAWINGS FOR FALSEWORK OR FORMS FOR BRIDGE SUPERSTRUCTURE AND ANY STRUCTURE OR PARTS OF A STRUCTURE AS NOTED ON THE PLANS SHALL BE SUBMITTED TO THE ENGINEER FOR APPROVAL BEFORE CONSTRUCTION OF THE FALSEWORK OR FORMS IS STARTED.

REINFORCING STEEL:

ALL REINFORCING STEEL SHALL BE DEFORMED. DIMENSIONS RELATIVE TO PLACEMENT OF REINFORCING ARE TO CENTERS OF BARS UNLESS OTHERWISE INDICATED IN THE PLANS. DIMENSIONS ON BAR DETAILS ARE TO CENTERS OF BARS OR ARE OUT TO OUT AS INDICATED ON PLANS.

WIRE BAR SUPPORTS SHALL BE PROVIDED FOR REINFORCING STEEL WHERE INDICATED ON THE PLANS. WHEN BAR SUPPORT PIECES ARE PLACED IN CONTINUOUS LINES, THEY SHALL BE SO PLACED THAT THE ENDS OF THE SUPPORTING WIRES SHALL BE LAPPED TO LOCK LEGS ON ADJOINING PIECES.

STRUCTURAL STEEL:

AT THE CONTRACTOR'S OPTION, HE MAY SUBSTITUTE 7/8" Ø SHEAR STUDS FOR THE 3/4" Ø STUDS SPECIFIED ON THE PLANS. THIS SUBSTITUTION SHALL BE MADE AT THE RATE OF 3 - 7/8" Ø STUDS FOR 4 - 3/4" Ø STUDS, AND STUD SPACING CHANGES SHALL BE MADE AS NECESSARY TO PROVIDE THE SAME EQUIVALENT NUMBER OF 7/8" Ø STUDS ALONG THE BEAM AS SHOWN FOR 3/4" Ø STUDS BASED ON THE RATIO OF 3 - 7/8" Ø STUDS FOR 4 - 3/4" Ø STUDS. STUDS OF THE LENGTH SPECIFIED ON THE PLANS MUST BE PROVIDED. THE MAXIMUM SPACING SHALL BE 2'-0".

EXCEPT AT THE INTERIOR SUPPORTS OF CONTINUOUS BEAMS WHERE THE COVER PLATE IS IN CONTACT WITH BEARING PLATE, THE CONTRACTOR MAY, AT HIS OPTION, SUBSTITUTE FOR THE COVER PLATES DESIGNATED ON THE PLANS COVER PLATES OF THE EQUIVALENT AREA PROVIDED THESE PLATES ARE AT LEAST 5/16" IN THICKNESS AND DO NOT EXCEED A WIDTH EQUAL TO THE FLANGE WIDTH LESS 2" OR A THICKNESS EQUAL TO 2 TIMES THE FLANGE THICKNESS. THE SIZE OF FILLET WELDS SHALL CONFORM TO THE REQUIREMENTS OF THE CURRENT ANSI/AASHTO/AWS "BRIDGE WELDING CODE". ELECTROSLAG WELDING WILL NOT BE PERMITTED.

WITH THE SOLE EXCEPTION OF EDGES AT SURFACES WHICH BEAR ON OTHER SURFACES, ALL SHARP EDGES AND ENDS OF SHAPES AND PLATES SHALL BE SLIGHTLY ROUNDED BY SUITABLE MEANS TO A RADIUS OF APPROXIMATELY 1/16 INCH OR EQUIVALENT FLAT SURFACE AT A SUITABLE ANGLE PRIOR TO PAINTING, GALVANIZING, OR METALLIZING.

HANDRAILS AND POSTS:

METAL STANDARDS AND FACES OF THE CONCRETE END POSTS FOR THE METAL RAIL SHALL BE SET NORMAL TO THE GRADE OF THE CURB, UNLESS OTHERWISE SHOWN ON PLANS. THE METAL RAIL AND TOPS OF CONCRETE POSTS USED WITH THE ALUMINUM RAIL SHALL BE BUILT PARALLEL TO THE GRADE OF THE CURB.

METAL HANDRAILS SHALL BE IN ACCORDANCE WITH THE PLANS. RAILS SHALL BE AS MANUFACTURED FOR BRIDGE RAILING. CASTINGS SHALL BE OF A UNIFORM APPEARANCE. FINS AND OTHER DEFORMATIONS RESULTING FROM CASTING OR OTHERWISE SHALL BE REMOVED IN A MANNER SO THAT A UNIFORM COLORING OF THE COMPLETED CASTING SHALL BE OBTAINED. CASTINGS WITH DISCOLORATIONS OR OF NON-UNIFORM COLORING WILL NOT BE ACCEPTED. CERTIFIED MILL REPORTS ARE REQUIRED FOR METAL RAILS AND POSTS.

SPECIAL NOTES:

GENERALLY, IN CASE OF DISCREPANCY, THIS STANDARD SHEET OF NOTES SHALL GOVERN OVER THE SPECIFICATIONS, BUT THE REMAINDER OF THE PLANS SHALL GOVERN OVER NOTES HEREON, AND SPECIAL PROVISIONS SHALL GOVERN OVER ALL. SEE SPECIFICATIONS ARTICLE 105-4.

ENGLISH

JANUARY, 1990

STD. NO. SN