DocuSign Envelope ID: 829D1AC1-AB81-4953-8A13-53872138A578

09/08/99

See Sheet 1A For Index of Sheets
See Sheet 1B For Conventional Plan Sheet Symbology

STATE OF NORTH CAROLINA
DIVISION OF HIGHWAYS

STATE	STATE PROJECT REFERENCE NO.	SHEET NO.	TOTAL SHEETS
N.C.	W-5702D	1	

STATE PROJ. NO.	F.A. PROJ. NO.	DESCRIPTION
44848.1.4	HSIP-0033(16)	PE
44848.2.4	HSIP-0033(16)	ROW, UTIL.
44848.3.4	HSIP-0033(16)	CONST.

PITT, BEAUFORT & CRAVEN COUNTIES

LOCATION: NC 33 IN BEAUFORT COUNTY BETWEEN MP 9.69 AND MP 34.50. NC 33 IN PITT COUNTY AT MP 26.72. SR 1700 (ADAMS CREEK RD.) IN CRAVEN COUNTY AT MP 0.00 AT THE CARTERET COUNTY LINE.

TYPE OF WORK: GUARDRAIL INSTALLATION AND UTILITY RELOCATION

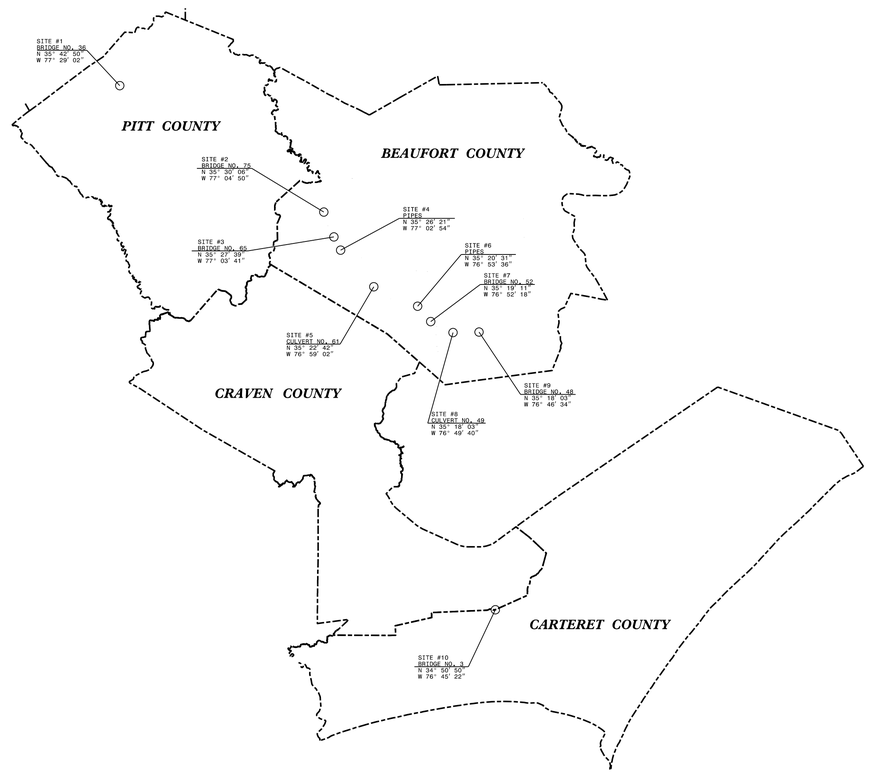

TIP PROJECT: W-5702D

CONTRACT: DB00405

GRAPHIC SCALES

50 25 0 50 100
PLANS

Prepared in the Office of:
WETHERILL ENGINEERING
1223 Jones Franklin Rd. Raleigh, N.C. 27606
License No. F-0377
Bus: 919.851.8077 Fax: 919.851.8107

Prepared for:
DIVISION OF HIGHWAYS DIVISION 2
105 PACTOLUS HWY
GREENVILLE NC, 27835

2018 STANDARD SPECIFICATIONS

RIGHT OF WAY DATE: JULY 18, 2017

LETTING DATE: MAY 23, 2018

NCDOT CONTACT:

EDWARD G. WETHERILL, PE
PROJECT ENGINEER

BOB A. MAY, PE
PROJECT DESIGN ENGINEER

LANG JONES
DIVISION PROJECT MANAGER

ROADWAY DESIGN ENGINEER

4/5/2018

NORTH CAROLINA PROFESSIONAL SEAL 21116 ENGINEER BOB A. MAY

DocuSigned by:
Bob A. May
SIGNATURE: P.E.

STATE OF NORTH CAROLINA DEPARTMENT OF TRANSPORTATION

4/5/2018
:\Proj\W-5702D_Rdy_psh01_tsh.dgn
USER:bmay

DocuSign Envelope ID: 829D1AC1-AB81-4953-8A13-53872138A578

WETHERILL ENGINEERING
1223 Jones Franklin Rd.
Raleigh, N.C. 27606
License No. F-0377
Bus: 919 851 8077
Fax: 919 851 8107
TRANSPORTATION PLANNING/DESIGN - BRIDGE/STRUCTURE DESIGN
CIVIL/SITE DESIGN - GIS/GPS - CONSTRUCTION OBSERVATION

PROJECT REFERENCE NO.	SHEET NO.
W-5702D	1A

ROADWAY DESIGN ENGINEER
4/5/2018
NORTH CAROLINA PROFESSIONAL SEAL 21116 ENGINEER FOR A WAY
DocuSigned by:
Bob A. May

DOCUMENT NOT CONSIDERED FINAL UNLESS ALL SIGNATURES COMPLETED

EFF. 01–16–2018
REV.

2018 ROADWAY ENGLISH STANDARD DRAWINGS

The following Roadway Standards as appear in "Roadway Standard Drawings" Highway Design Branch – N. C. Department of Transportation – Raleigh, N. C., Dated January, 2018 are applicable to this project and by reference hereby are considered a part of these plans:

STD.NO. TITLE

DIVISION 8 – INCIDENTALS

862.01 Guardrail Placement
862.02 Guardrail Installation (Special Detail for Sheet 6 of 8)
862.03 Structure Anchor Units (Special Detail for Type III Anchor Units Sheets 1 of 7 and 2 of 7)

INDEX OF SHEETS

SHEET NUMBER	SHEET
1	TITLE SHEET
1A	INDEX OF SHEETS, GENERAL NOTES, AND STANDARD DRAWINGS
1B	CONVENTIONAL SYMBOLS
2C–1 THRU 2C–3	SPECIAL DETAILS
3B–1	ROADWAY SUMMARIES
4 THRU 14	PLAN AND PROFILE SHEET
TMP–1 THRU TMP–2	TRAFFIC MANAGEMENT PLANS
UO–1 THRU UO–12	UTILITIES BY OTHERS PLANS

GENERAL NOTES: 2018 SPECIFICATIONS
EFFECTIVE: 01–16–2018
REVISED:

GUARDRAIL:

THE GUARDRAIL LOCATIONS SHOWN ON THE PLANS MAY BE ADJUSTED DURING CONSTRUCTION AS DIRECTED BY THE ENGINEER. THE CONTRACTOR SHOULD CONSULT WITH THE ENGINEER PRIOR TO ORDERING GUARDRAIL MATERIAL.

UTILITIES:

UTILITY OWNERS ON THIS PROJECT ARE;
CENTURY LINK
GREENVILLE UTILITIES COMMISSION
SUDDENLINK COMMUNICATIONS
BEAUFORT COUNTY WATER DEPARTMENT
TOWN OF CHOCOWINITY
DUKE ENERGY
PIEDMONT NATURAL GAS COMPANY
TIDELAND ELECTRIC MEMBERSHIP CORPORATION
TIME WARNER CABLE
CARTERET–CRAVEN ELECTRIC COOPERATIVE
CRAVEN COUNTY WATER

ANY RELOCATION OF EXISTING UTILITIES WILL BE ACCOMPLISHED BY OTHERS.

8/17/99
3/27/2018
I:\W-5702D_Rdy_psh01a_Index.dgn
jsc Fahrenji

DocuSign Envelope ID: 829D1AC1-AB81-4953-8A13-53872138A578

12/2/2016

PROJECT REFERENCE NO.	SHEET NO.
W-5702D	1B

STATE OF NORTH CAROLINA, DIVISION OF HIGHWAYS

CONVENTIONAL PLAN SHEET SYMBOLS

Note: Not to Scale

**S.U.E. = Subsurface Utility Engineering*

BOUNDARIES AND PROPERTY:

- State Line
- County Line
- Township Line
- City Line
- Reservation Line
- Property Line
- Existing Iron Pin — EIP
- Computed Property Corner
- Property Monument — ECM
- Parcel/Sequence Number — 123
- Existing Fence Line
- Proposed Woven Wire Fence
- Proposed Chain Link Fence
- Proposed Barbed Wire Fence
- Existing Wetland Boundary — WLB
- Proposed Wetland Boundary — WLB
- Existing Endangered Animal Boundary — EAB
- Existing Endangered Plant Boundary — EPB
- Existing Historic Property Boundary — HPB
- Known Contamination Area: Soil — S
- Potential Contamination Area: Soil — S
- Known Contamination Area: Water — W
- Potential Contamination Area: Water — W
- Contaminated Site: Known or Potential

BUILDINGS AND OTHER CULTURE:

- Gas Pump Vent or U/G Tank Cap
- Sign — S
- Well — W
- Small Mine
- Foundation
- Area Outline
- Cemetery
- Building
- School
- Church
- Dam

HYDROLOGY:

- Stream or Body of Water
- Hydro, Pool or Reservoir
- Jurisdictional Stream — JS
- Buffer Zone 1 — BZ 1
- Buffer Zone 2 — BZ 2
- Flow Arrow
- Disappearing Stream
- Spring
- Wetland
- Proposed Lateral, Tail, Head Ditch — FLOW
- False Sump

RAILROADS:

- Standard Gauge — CSX TRANSPORTATION
- RR Signal Milepost — MILEPOST 35
- Switch — SWITCH
- RR Abandoned
- RR Dismantled

RIGHT OF WAY & PROJECT CONTROL:

- Secondary Horiz and Vert Control Point
- Primary Horiz Control Point
- Primary Horiz and Vert Control Point
- Exist Permanent Easment Pin and Cap
- New Permanent Easement Pin and Cap
- Vertical Benchmark
- Existing Right of Way Marker
- Existing Right of Way Line
- New Right of Way Line — RW
- New Right of Way Line with Pin and Cap — RW
- New Right of Way Line with Concrete or Granite R/W Marker — RW
- New Control of Access Line with Concrete C/A Marker — CA
- Existing Control of Access — CA
- New Control of Access — CA
- Existing Easement Line — E
- New Temporary Construction Easement — E
- New Temporary Drainage Easement — TDE
- New Permanent Drainage Easement — PDE
- New Permanent Drainage / Utility Easement — DUE
- New Permanent Utility Easement — PUE
- New Temporary Utility Easement — TUE
- New Aerial Utility Easement — AUE

ROADS AND RELATED FEATURES:

- Existing Edge of Pavement
- Existing Curb
- Proposed Slope Stakes Cut — C
- Proposed Slope Stakes Fill — F
- Proposed Curb Ramp — CR
- Existing Metal Guardrail
- Proposed Guardrail
- Existing Cable Guiderail
- Proposed Cable Guiderail
- Equality Symbol
- Pavement Removal

VEGETATION:

- Single Tree
- Single Shrub
- Hedge
- Woods Line
- Orchard
- Vineyard — Vineyard

EXISTING STRUCTURES:

MAJOR:

- Bridge, Tunnel or Box Culvert — CONC
- Bridge Wing Wall, Head Wall and End Wall — CONC WW

MINOR:

- Head and End Wall — CONC HW
- Pipe Culvert
- Footbridge
- Drainage Box: Catch Basin, DI or JB — CB
- Paved Ditch Gutter
- Storm Sewer Manhole — S
- Storm Sewer — S

UTILITIES:

POWER:

- Existing Power Pole
- Proposed Power Pole
- Existing Joint Use Pole
- Proposed Joint Use Pole
- Power Manhole — P
- Power Line Tower
- Power Transformer
- U/G Power Cable Hand Hole
- H-Frame Pole
- U/G Power Line LOS B (S.U.E.*) — P
- U/G Power Line LOS C (S.U.E.*) — P
- U/G Power Line LOS D (S.U.E.*) — P

TELEPHONE:

- Existing Telephone Pole
- Proposed Telephone Pole
- Telephone Manhole — T
- Telephone Pedestal — T
- Telephone Cell Tower
- U/G Telephone Cable Hand Hole
- U/G Telephone Cable LOS B (S.U.E.*) — T
- U/G Telephone Cable LOS C (S.U.E.*) — T
- U/G Telephone Cable LOS D (S.U.E.*) — T
- U/G Telephone Conduit LOS B (S.U.E.*) — TC
- U/G Telephone Conduit LOS C (S.U.E.*) — TC
- U/G Telephone Conduit LOS D (S.U.E.*) — TC
- U/G Fiber Optics Cable LOS B (S.U.E.*) — T FO
- U/G Fiber Optics Cable LOS C (S.U.E.*) — T FO
- U/G Fiber Optics Cable LOS D (S.U.E.*) — T FO

WATER:

- Water Manhole — W
- Water Meter
- Water Valve
- Water Hydrant
- U/G Water Line LOS B (S.U.E*)
- U/G Water Line LOS C (S.U.E*)
- U/G Water Line LOS D (S.U.E*)
- Above Ground Water Line — A/G Water

TV:

- TV Pedestal — C
- TV Tower
- U/G TV Cable Hand Hole — HH
- U/G TV Cable LOS B (S.U.E.*) — TV
- U/G TV Cable LOS C (S.U.E.*) — TV
- U/G TV Cable LOS D (S.U.E.*) — TV
- U/G Fiber Optic Cable LOS B (S.U.E.*) — TV FO
- U/G Fiber Optic Cable LOS C (S.U.E.*) — TV FO
- U/G Fiber Optic Cable LOS D (S.U.E.*) — TV FO

GAS:

- Gas Valve
- Gas Meter
- U/G Gas Line LOS B (S.U.E.*) — G
- U/G Gas Line LOS C (S.U.E.*) — G
- U/G Gas Line LOS D (S.U.E.*) — G
- Above Ground Gas Line — A/G Gas

SANITARY SEWER:

- Sanitary Sewer Manhole
- Sanitary Sewer Cleanout
- U/G Sanitary Sewer Line — SS
- Above Ground Sanitary Sewer — A/G Sanitary Sewer
- SS Forced Main Line LOS B (S.U.E.*) — FSS
- SS Forced Main Line LOS C (S.U.E.*) — FSS
- SS Forced Main Line LOS D (S.U.E.*) — FSS

MISCELLANEOUS:

- Utility Pole
- Utility Pole with Base
- Utility Located Object
- Utility Traffic Signal Box — S
- Utility Unknown U/G Line LOS B (S.U.E.*) — ?UTL
- U/G Tank; Water, Gas, Oil
- Underground Storage Tank, Approx. Loc. — UST
- A/G Tank; Water, Gas, Oil
- Geoenvironmental Boring
- U/G Test Hole LOS A (S.U.E.*)
- Abandoned According to Utility Records — AATUR
- End of Information — E.O.I.

DocuSign Envelope ID: 829D1AC1-AB81-4953-8A13-53872138A578

PROJECT REFERENCE NO.	SHEET NO.
W-5702D	2C-1

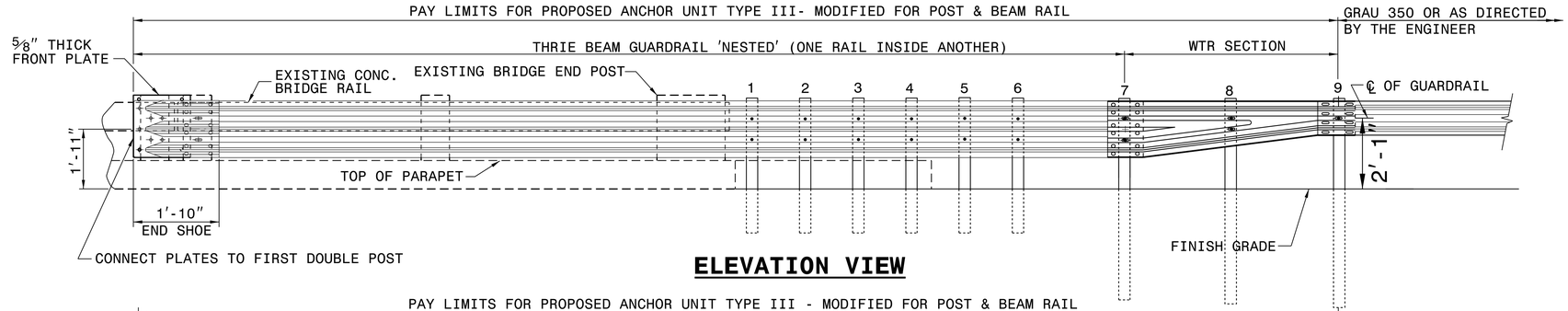

ELEVATION VIEW

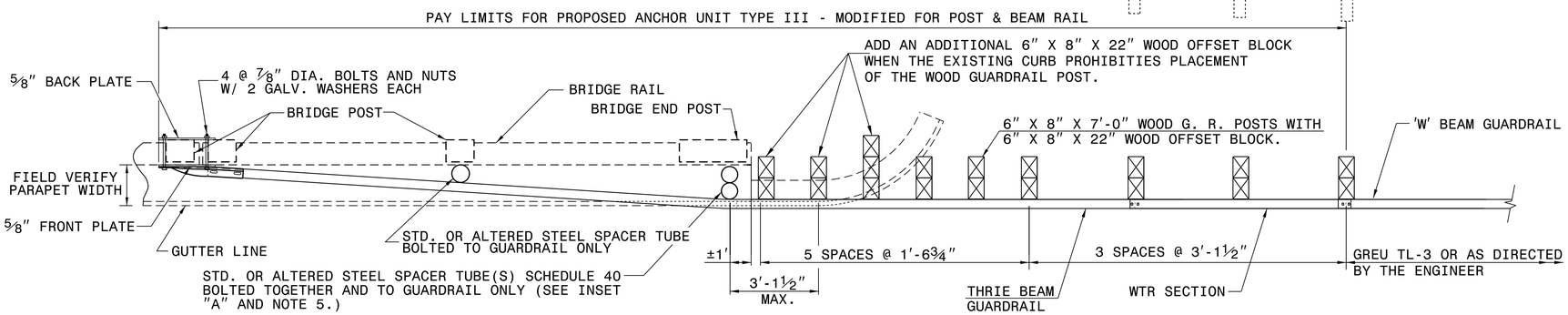

PLAN VIEW

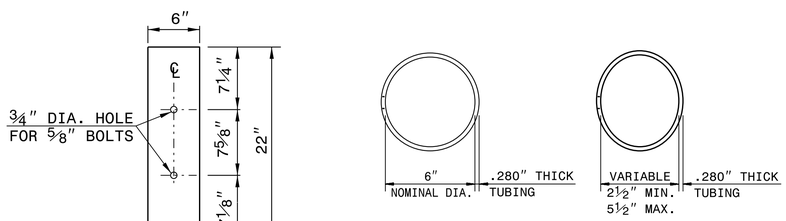

FRONT VIEW **PLAN VIEW** **PLAN VIEW INSET "A"**

STEEL SPACER TUBE

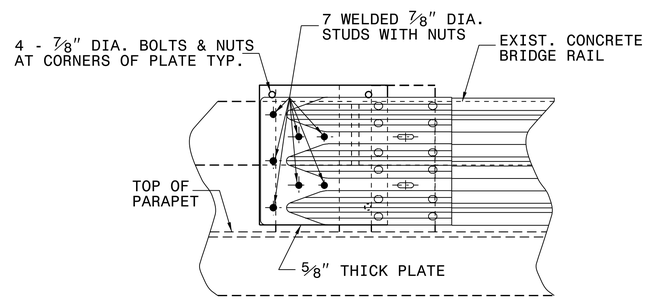

ELEVATION VIEW

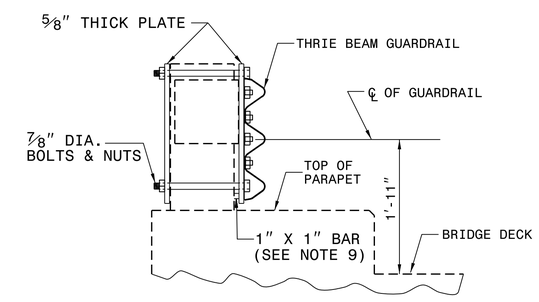

SECTION VIEW

Docusigned by: Joel S. Howerton 873F3D1DC0C4...

NORTH CAROLINA PROFESSIONAL SEAL 022966 ENGINEER Joel S. Howerton

4/6/2018

GENERAL NOTES:

1. USE NUTS, BOLTS, AND WASHERS CONFORMING TO THE REQUIREMENTS OF A.S.T.M. A-307 AND GALVANIZED IN ACCORDANCE WITH SECTION 1076 OF STAND. SPECS.
2. TAP NUTS FOR THE 7/8" DIA. STUDS AND BOLTS AFTER GALVANIZING SEE A.S.T.M. A-563.
3. USE PLATES AND TUBES CONFORMING TO THE REQUIREMENTS OF A.S.T.M. A-36 AND GALVANIZED AFTER FABRICATION IN ACCORDANCE WITH SECTION 1076 OF STAND. SPECS.
4. ADDITIONAL FIELD HOLES MAY BE DRILLED IN STEEL RAIL AS DIRECTED BY THE ENGINEER.
5. INSTALL FACE OF GUARDRAIL AS NEAR AS POSSIBLE TO PLUMB WITH THE PARAPET FACE AT BRIDGE END POST SPACER TUBE LOCATION BY USING STANDARD OR ALTERED SPACER TUBES OR A COMBINATION THEREOF OR AS DIRECTED BY THE ENGINEER. FOR VERY SMALL PARAPET WIDTHS, GUARDRAIL MAY BE INSTALLED AGAINST BRIDGE RAIL WITHOUT SPACER TUBES.
6. DO NOT DRILL BRIDGE RAIL IN ORDER TO INSTALL GUARDRAIL ANCHOR UNIT.
7. USE THIS DETAIL ONLY FOR BRIGES WITH POST AND BEAM TYPE RAIL.
8. ATTACH 1" X 1" BAR AND THREADED STUDS TO PLATE WITH ¼" WELDS ALL AROUND.
9. 1" X 1" BAR MAY NOT BE NEEDED ON BRIDGE RAILS WHERE FACE OF RAIL DOES NOT PROJECT BEYOND FACE OF POST.
10. PROVIDE SHOP DRAWINGS OF THE PLATES TO THE ENGINEER FOR APPROVAL BEFORE FABRICATING THE PLATES.
11. LAP JOINTS IN THE DIRECTION OF TRAFFIC FLOW.
12. SEE ROADWAY STANDARD DRAWING 862.03 SHEET 3 FOR ADDITIONAL INFORMATION ON THE TYPE III ANCHOR UNIT

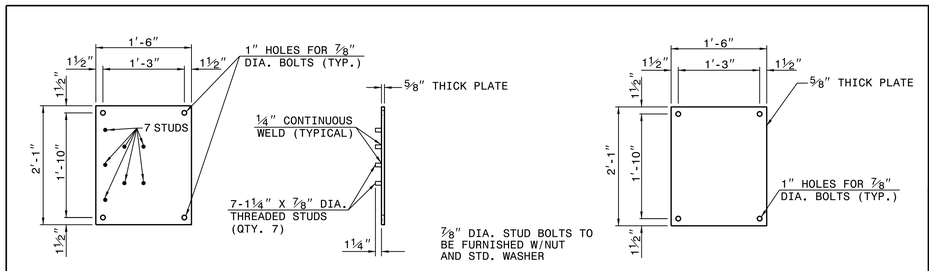

FRONT VIEW **SIDE VIEW**

FRONT PLATE

BACK PLATE

BRIDGE PLATES

DOCUMENT NOT CONSIDERED FINAL UNLESS ALL SIGNATURES COMPLETED

CONTRACT STANDARDS AND DEVELOPMENT UNIT
Office 919-707-6950 FAX 919-250-4119

TYPE III MODIFIED FOR POST AND BEAM RAIL

ORIGINAL BY: E.E. WARD DATE: 01-03
MODIFIED BY: E.E. WARD DATE: 05-17
CHECKED BY: DATE:
FILE SPEC.: s:details\stand\bpiii originial.dgn

11-MAY-2017 08:17
S:\Contracts\Contracts\Special Details\ericward\usr\details\stand\bp iii original.dgn
jhowerton AT CSD-22595

DocuSign Envelope ID: 829D1AC1-AB81-4953-8A13-53872138A578

PROJECT REFERENCE NO.	SHEET NO.
W-5702D	2C-2

STATE OF
NORTH CAROLINA
DEPT. OF TRANSPORTATION
DIVISION OF HIGHWAYS
RALEIGH, N.C.

SPECIAL DETAIL FOR
GUARDRAIL PLACEMENT
25'-0" CLEAR SPAN

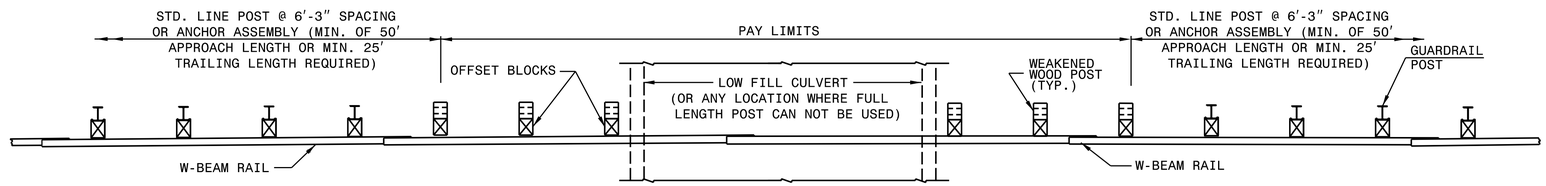

PLAN

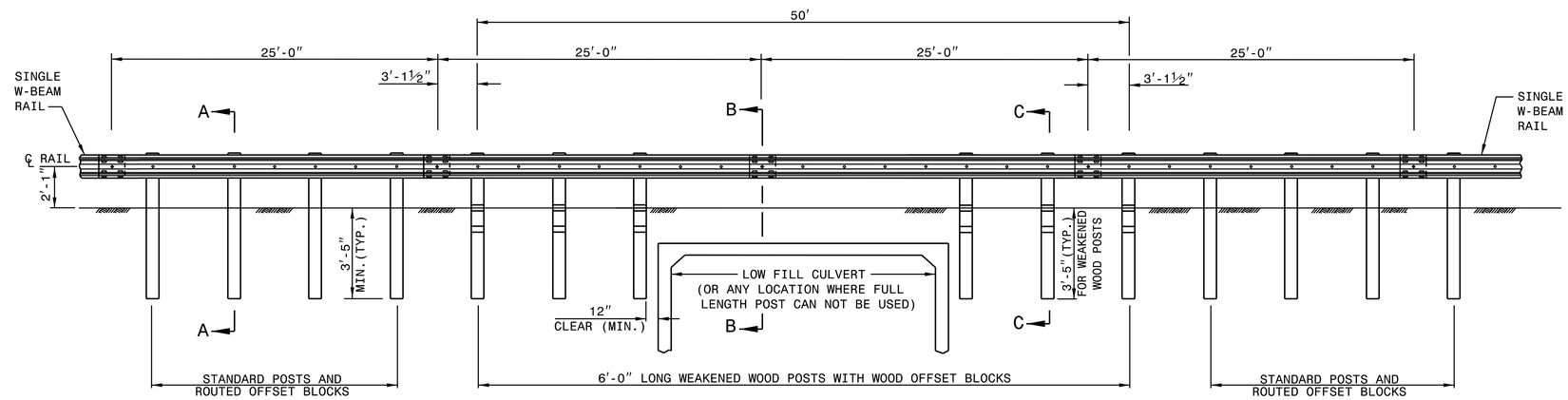

ELEVATION
25'-0" GUARDRAIL SPAN

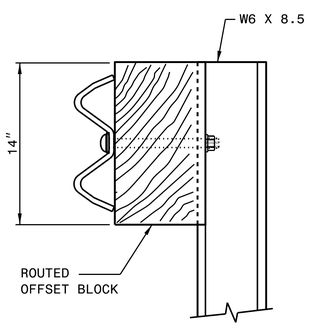

SECTION A-A

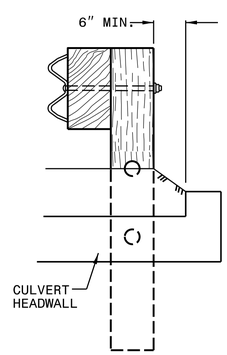

SECTION B-B

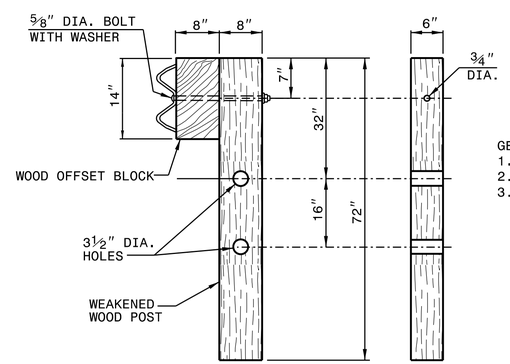

SECTION C-C **FRONT**
WEAKENED WOOD POST

GENERAL NOTES:
1. LAP RAIL IN THE DIRECTION OF TRAFFIC FLOW.
2. SEE ROADWAY PLANS FOR LOCATIONS AND CONTINUATION OF RAIL OR END SECTIONS.
3. MINIMUM DISTANCE OF 5 FEET BEHIND THE GUARDRAIL SHOULD BE CLEAR OF ANY FIXED-OBJECT HAZARDS THAT COULD SNAG AN IMPACTING VEHICLE.

SHEET - OF -
862D01

STATE OF
NORTH CAROLINA
DEPT. OF TRANSPORTATION
DIVISION OF HIGHWAYS
RALEIGH, N.C.

SPECIAL DETAIL FOR
GUARDRAIL PLACEMENT
25'-0" CLEAR SPAN

SHEET - OF -
862D01

Docusigned by:
Joel S. Howerton
B70F3D17DC0F...

NORTH CAROLINA PROFESSIONAL SEAL 022966 ENGINEER JOEL S. HOWERTON
4/6/2018

CONTRACTS STANDARDS AND DEVELOPMENT UNIT
Office 919-707-6950 FAX 919-250-4119

25'-0" CLEAR SPAN GUARDRAIL PLACEMENT

ORIGINAL BY: _____ DATE: _____
MODIFIED BY: _____ DATE: _____
CHECKED BY: _____ DATE: _____
FILE SPEC.: _____

DOCUMENT NOT CONSIDERED FINAL UNLESS ALL SIGNATURES COMPLETED

DocuSign Envelope ID: 829D1AC1-AB81-4953-8A13-53872138A578

PROJECT REFERENCE NO.	SHEET NO.
W-5702D	2C-3

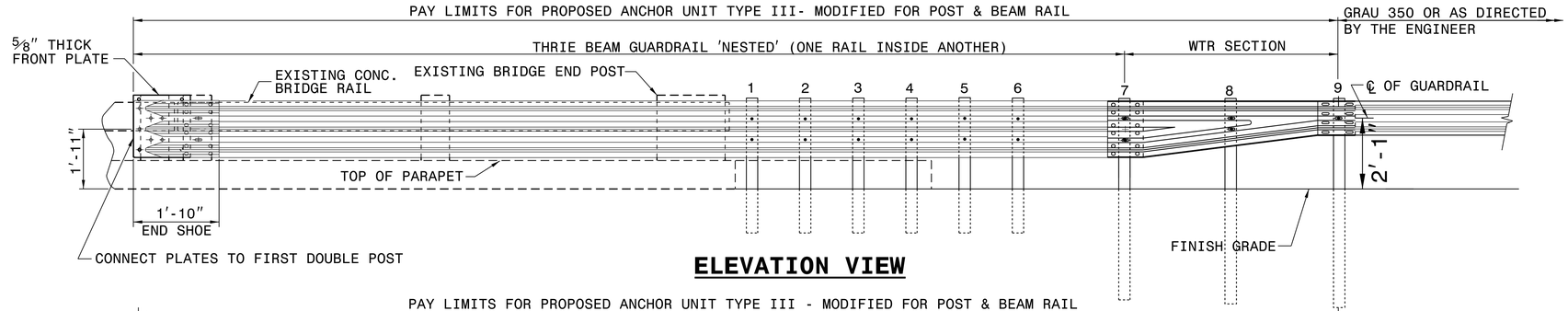

ELEVATION VIEW

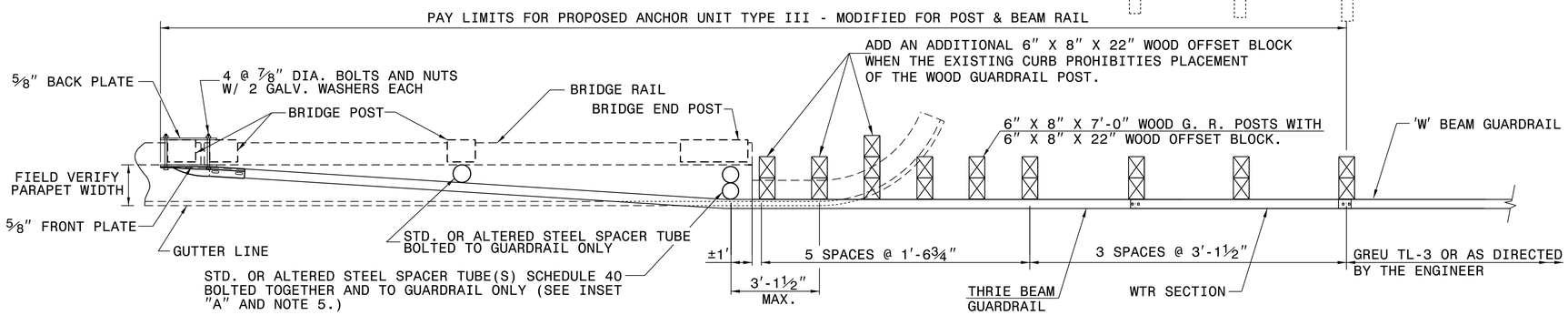

PLAN VIEW

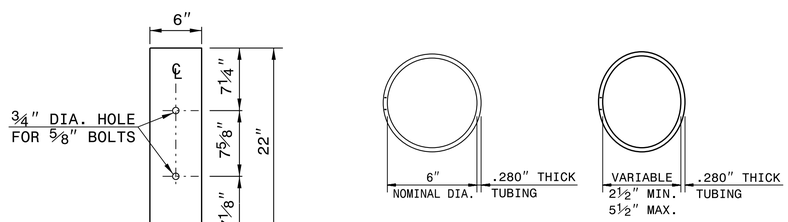

FRONT VIEW **PLAN VIEW** **PLAN VIEW INSET "A"**

STEEL SPACER TUBE

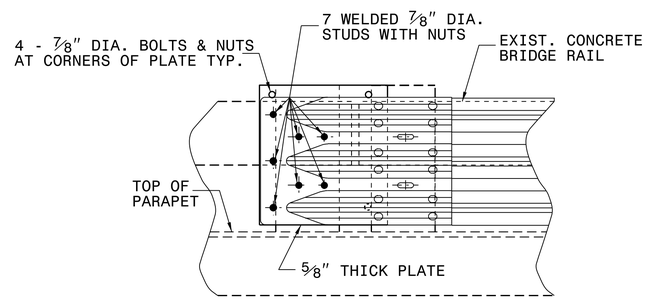

ELEVATION VIEW

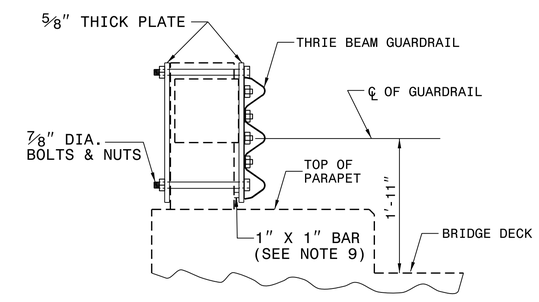

SECTION VIEW

GENERAL NOTES:

1. USE NUTS, BOLTS, AND WASHERS CONFORMING TO THE REQUIREMENTS OF A.S.T.M. A-307 AND GALVANIZED IN ACCORDANCE WITH SECTION 1076 OF STAND. SPECS.
2. TAP NUTS FOR THE 7/8" DIA. STUDS AND BOLTS AFTER GALVANIZING SEE A.S.T.M. A-563.
3. USE PLATES AND TUBES CONFORMING TO THE REQUIREMENTS OF A.S.T.M. A-36 AND GALVANIZED AFTER FABRICATION IN ACCORDANCE WITH SECTION 1076 OF STAND. SPECS.
4. ADDITIONAL FIELD HOLES MAY BE DRILLED IN STEEL RAIL AS DIRECTED BY THE ENGINEER.
5. INSTALL FACE OF GUARDRAIL AS NEAR AS POSSIBLE TO PLUMB WITH THE PARAPET FACE AT BRIDGE END POST SPACER TUBE LOCATION BY USING STANDARD OR ALTERED SPACER TUBES OR A COMBINATION THEREOF OR AS DIRECTED BY THE ENGINEER. FOR VERY SMALL PARAPET WIDTHS, GUARDRAIL MAY BE INSTALLED AGAINST BRIDGE RAIL WITHOUT SPACER TUBES.
6. DO NOT DRILL BRIDGE RAIL IN ORDER TO INSTALL GUARDRAIL ANCHOR UNIT.
7. USE THIS DETAIL ONLY FOR BRIGES WITH POST AND BEAM TYPE RAIL.
8. ATTACH 1" X 1" BAR AND THREADED STUDS TO PLATE WITH 1/4" WELDS ALL AROUND.
9. 1" X 1" BAR MAY NOT BE NEEDED ON BRIDGE RAILS WHERE FACE OF RAIL DOES NOT PROJECT BEYOND FACE OF POST.
10. PROVIDE SHOP DRAWINGS OF THE PLATES TO THE ENGINEER FOR APPROVAL BEFORE FABRICATING THE PLATES.
11. LAP JOINTS IN THE DIRECTION OF TRAFFIC FLOW.
12. SEE ROADWAY STANDARD DRAWING 862.03 SHEET 3 FOR ADDITIONAL INFORMATION ON THE TYPE III ANCHOR UNIT

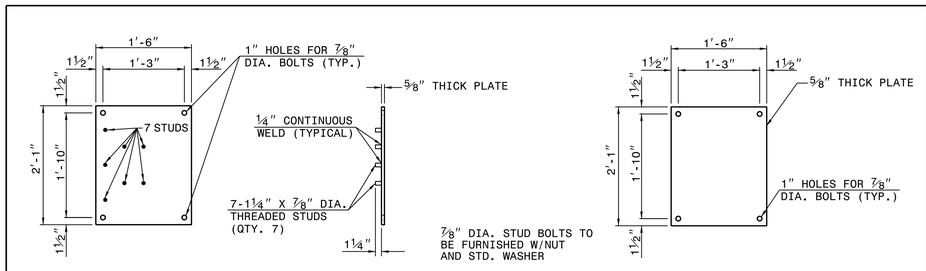

FRONT VIEW **SIDE VIEW** **BACK PLATE**

FRONT PLATE

BRIDGE PLATES

DOCUMENT NOT CONSIDERED FINAL UNLESS ALL SIGNATURES COMPLETED

CONTRACT STANDARDS AND DEVELOPMENT UNIT
Office 919-707-6950 FAX 919-250-4119

TYPE III MODIFIED FOR POST AND BEAM RAIL

ORIGINAL BY: E.E. WARD DATE: 01-03
MODIFIED BY: E.E. WARD DATE: 05-17
CHECKED BY: DATE:
FILE SPEC.: s:details\stand\bpiii originial.dgn

11-MAY-2017 08:17
S:\Contracts\Contracts\Special Details\ericward\usr\details\stand\bp iii original.dgn
jhowerton AT CSD-22595

DocuSign Envelope ID: 829D1AC1-AB81-4953-8A13-53872138A578

COMPUTED BY: BAM DATE: 11/30/2017
CHECKED BY: DATE:

DIVISION OF HIGHWAYS
STATE OF NORTH CAROLINA

PROJECT REFERENCE NO.	SHEET NO.
W-5702D	3B-1

"N" = DISTANCE FROM EDGE OF LANE TO FACE OF GUARDRAIL
TOTAL SHOULDER WIDTH = DISTANCE FROM EDGE OF TRAVEL LANE TO SHOULDER BREAK POINT.
FLARE LENGTH = DISTANCE FROM LAST SECTION OF PARALLEL GUARDRAIL TO END OF GUARDRAIL
W = TOTAL WIDTH OF FLARE FROM BEGINNING OF TAPER TO END OF GUARDRAIL

GUARDRAIL SUMMARY

G = GATING IMPACT ATTENUATOR TYPE 350
NG = NON-GATING IMPACT ATTENUATOR TYPE 350

SURVEY LINE	BEG. STA.	END STA.	LOCATION	LENGTH			WARRANT POINT		"N" DIST. FROM E.O.L.	TOTAL SHOUL WIDTH	FLARE LENGTH		W		ANCHORS								IMPACT ATTENUATOR TYPE 350		25' CLEAR SPAN GUARDAIL SECTIONS (SEE SHT. 2C-2)	REMOVE EXISTING GUARDRAIL	REMOVE & STOCKPILE EXISTING GUARDRAIL	REMARKS
				STRAIGHT	SHOP CURVED	DOUBLE FACED	APPROACH END	TRAILING END			APPROACH END	TRAILING END	APPROACH END	TRAILING END	XI MOD	XI	GREU 350	TYPE III (SEE SHT. 2C-1)	TYPE III MOD. (SEE SHT. 2C-3)	CAT-1	VI MOD	BIC	G	NG				
PSH 4 (PITT #36)																												
L	14+50 +/-	Bridge	LT	200.00				Bridge	4.67'	6'		50'		1'			1		1									UTILIZE EXTRA LENGTH GUARDRAIL POSTS
	14+50 +/-	Bridge	RT	200.00			Bridge		4.67'	6'	50'		1'				1		1									UTILIZE EXTRA LENGTH GUARDRAIL POSTS
	Bridge	19+10+/-	RT	137.50				Bridge	4.67'	6'		50'		1'			1		1									UTILIZE EXTRA LENGTH GUARDRAIL POSTS
	Bridge	19+25 +/-	LT	150.00			Bridge		4.67'	6'	50'		1'				1		1									UTILIZE EXTRA LENGTH GUARDRAIL POSTS
PSH 5 (BEAUFORT #75)																												
L	14+40 +/-	Bridge	RT	150.00			Bridge		4.63'	8'	50'		1'				1		1									
	14+90 +/-	Bridge	LT	100.00				Bridge	4.63'	8'		50'		1'			1		1									
	Bridge	18+59 +/-	RT	100.00				Bridge	4.63'	8'		50'		1'			1		1									
	Bridge	19+09 +/-	LT	150.00			Bridge		4.63'	8'	50'		1'				1		1									
PSH 6 (BEAUFORT #65)																												
L	12+07 +/-	Bridge	RT	300.00			Bridge		4.67'	6'	50'		1'				1		1						1			UTILIZE EXTRA LENGTH GUARDRAIL POSTS. UTILIZE 25' CLEAR SPAN TO SPAN EX. WATER LINE 12+75 RT.
	14+33 +/-	Bridge	LT	75.00				Bridge	4.67'	6'		50'		1'			1		1									UTILIZE EXTRA LENGTH GUARDRAIL POSTS
	Bridge	16+26 +/-	LT	100.00			Bridge		4.67'	6'	50'		1'				1		1									UTILIZE EXTRA LENGTH GUARDRAIL POSTS
	Bridge	16+26 +/-	RT	100.00				Bridge	4.67'	6'		50'		1'			1		1									UTILIZE EXTRA LENGTH GUARDRAIL POSTS
PSH 7 (PIPES)																												
L	15+05 +/-	17+55 +/-	LT	250.00			16+48 +/-	16+12 +/-	4'	6'	50'	50'	1'	1'			2								2			UTILIZE EXTRA LENGTH GUARDRAIL POSTS
	15+05 +/-	17+55 +/-	RT	250.00			16+12 +/-	16+48 +/-	4'	6'	50'	50'	1'	1'			2								2			UTILIZE EXTRA LENGTH GUARDRAIL POSTS
PSH 8 (BEAUFORT CULVERT #61)																												
L	14+86 +/-	17+86 +/-	LT	300.00			16+35 +/-	16+11 +/-	4'	6'	50'	50'	1'	1'			2								1			UTILIZE EXTRA LENGTH GUARDRAIL POSTS
	14+60 +/-	17+60 +/-	RT	300.00			16+11 +/-	16+35 +/-	4'	6'	50'	50'	1'	1'			2								1			UTILIZE EXTRA LENGTH GUARDRAIL POSTS
PSH 9 (BEAUFORT 18.41 MM)																												
L	14+73 +/-	17+23 +/-	RT	250.00			16+27 +/-	16+44 +/-	4'	6'	50'	50'	1'	1'			2								1			UTILIZE EXTRA LENGTH GUARDRAIL POSTS
	15+23 +/-	17+48 +/-	LT	225.00			16+44 +/-	16+27 +/-	4'	6'	50'	50'	1'	1'			2								1			UTILIZE EXTRA LENGTH GUARDRAIL POSTS
PSH 10 (BEAUFORT #52)																												
L	14+19 +/-	Bridge	LT	125.00				Bridge	4.63'	6'		50'		1'			1		1									UTILIZE EXTRA LENGTH GUARDRAIL POSTS
	14+63 +/-	Bridge	RT	100.00			Bridge		4.63'	6'	50'		1'				1		1									UTILIZE EXTRA LENGTH GUARDRAIL POSTS
	Bridge	18+06 +/-	LT	125.00			Bridge		4.63'	6'	50'		1'				1		1									UTILIZE EXTRA LENGTH GUARDRAIL POSTS
	Bridge	18+23 +/-	RT	125.00				Bridge	4.63'	6'		50'		1'			1		1									UTILIZE EXTRA LENGTH GUARDRAIL POSTS
PSH 11 (BEAUFORT CULVERT #49)																												
L	16+15 +/-	17+60 +/-	LT	148.13	66.37		16+59 +/-	16+38 +/-	4'	6'	50'	50'	1'	1'			2								1			UTILIZE EXTRA LENGTH GUARDRAIL POSTS
	16+15 +/-	17+60 +/-	RT	163.43	43.00		16+38 +/-	16+59 +/-	4'	6'	50'	50'	1'	1'			2								1			UTILIZE EXTRA LENGTH GUARDRAIL POSTS
PSH 12 & 13 BEAUFORT #48)																												
L	14+45 +/-	Bridge	LT	550.00				Bridge	1'	6'		78'		3'			1		1						3			UTILIZE EXTRA LENGTH GUARDRAIL POSTS & PLACE FACE OF PROPOSED GUARDRAIL DIRECTLY ABOVE 6" PVC SEWER LINE
	14+45 +/-	Bridge	RT	550.00			Bridge		1'	8'	78'		3'				1		1									UTILIZE EXTRA LENGTH GUARDRAIL POSTS
	Bridge	29+62 +/-	LT	650.00			Bridge		1'	6'	78'		3'				1		1									UTILIZE EXTRA LENGTH GUARDRAIL POSTS
	Bridge	29+62 +/-	RT	650.00				Bridge	1'	6'		78'		3'			1		1									UTILIZE EXTRA LENGTH GUARDRAIL POSTS
PSH 14 (CRAVEN #3)																												
L	14+77 +/-	Bridge	RT	125.00			Bridge		10.75'	12.75'	50'		1'															TIE TO EXISTING GUARDRAIL ON BRIDGE
	15+26 +/-	Bridge	LT	75.00				Bridge	10.75'	12.75'		50'		1'														TIE TO EXISTING GUARDRAIL ON BRIDGE
	Bridge	17+57 +/-	RT	56.25				Bridge	10.75'	12.75'		50'		1'														TIE TO EXISTING GUARDRAIL ON BRIDGE
	Bridge	19+05 +/-	LT	100.00			Bridge		10.75'	12.75'	50'		1'															TIE TO EXISTING GUARDRAIL ON BRIDGE
Project Subtotal				6880.31	109.37												36.00		20.00						14.00			
	Less Anchor Units																											
		36 GREU @ 50'=		-1800.00																								
	20 Type III Mod. @ 18.75'=			-375.00																								
Project Total				4705.31	109.37																							
Say				5000.00	125.00																							
								Additional Guardrail Posts = 5 Each																				
								Additional 8' Guardrail Posts = 20 Each																				

DocuSign Envelope ID: 829D1AC1-AB81-4953-8A13-53872138A578

WETHERILL ENGINEERING
1223 Jones Franklin Rd.
Raleigh, N.C. 27606
License No. F-0377
Bus: 919 851 8077
Fax: 919 851 8107
TRANSPORTATION PLANNING/DESIGN - BRIDGE/STRUCTURE DESIGN
CIVIL/SITE DESIGN - GIS/GPS - CONSTRUCTION OBSERVATION

PROJECT REFERENCE NO.	SHEET NO.
W-5702D	4
R/W SHEET NO.	
ROADWAY DESIGN ENGINEER	HYDRAULICS ENGINEER

4/5/2018

NORTH CAROLINA PROFESSIONAL SEAL 21116 ENGINEER BOB A. MAY

DocuSigned by: Bob A. May
513D84

DOCUMENT NOT CONSIDERED FINAL UNLESS ALL SIGNATURES COMPLETED

SITE #1
BRIDGE NO. 36
N 35° 42' 50"
W 77° 29' 02"

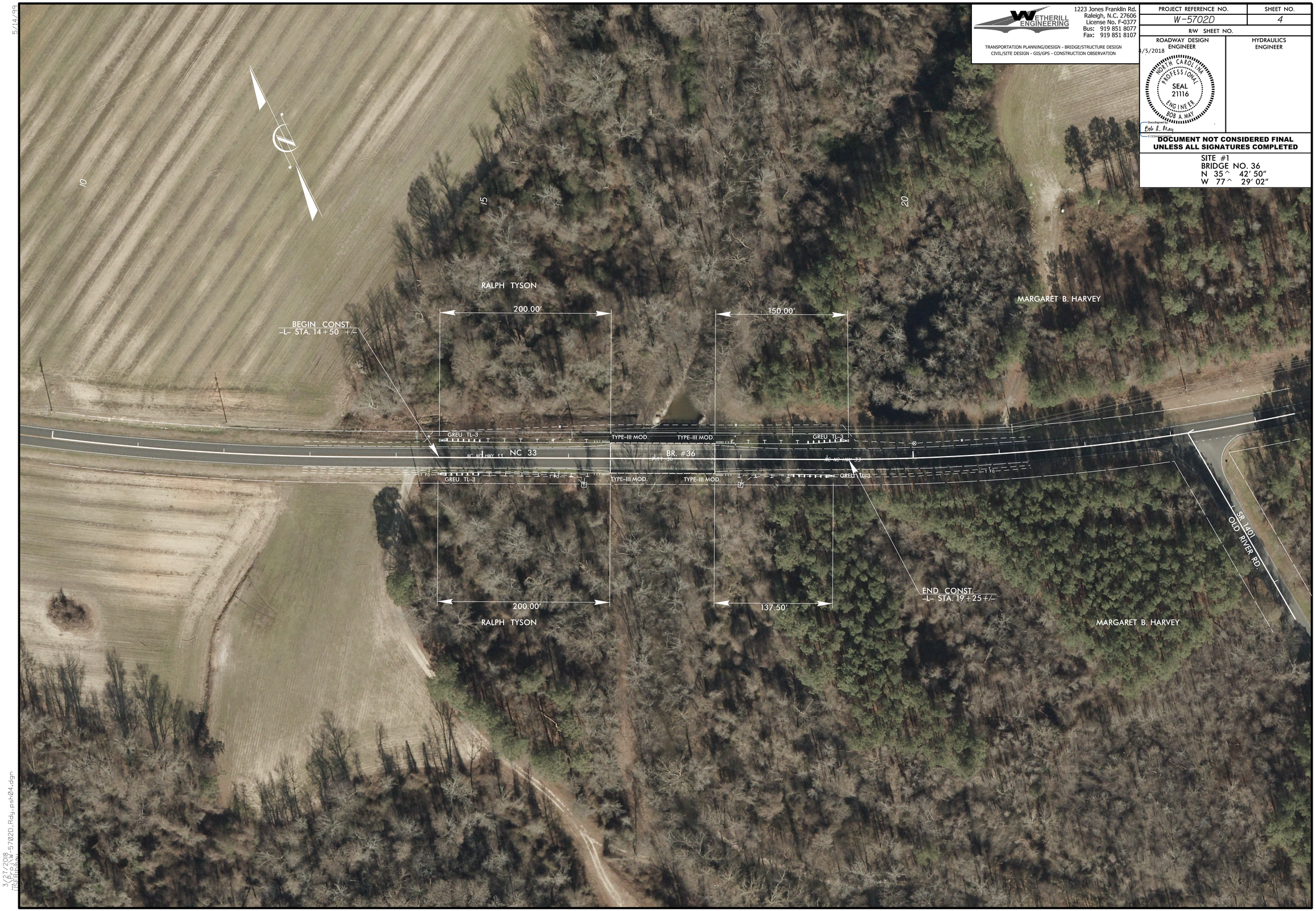

5/14/99

3/27/2018
W-5702D_Rdy_psh04.dgn
USER:bam

DocuSign Envelope ID: 829D1AC1-AB81-4953-8A13-53872138A578

WETHERILL ENGINEERING
1223 Jones Franklin Rd.
Raleigh, N.C. 27606
License No. F-0377
Bus: 919 851 8077
Fax: 919 851 8107
TRANSPORTATION PLANNING/DESIGN - BRIDGE/STRUCTURE DESIGN
CIVIL/SITE DESIGN - GIS/GPS - CONSTRUCTION OBSERVATION

PROJECT REFERENCE NO.	SHEET NO.
W-5702D	5
R/W SHEET NO.	
ROADWAY DESIGN ENGINEER	HYDRAULICS ENGINEER

4/5/2018
NORTH CAROLINA PROFESSIONAL SEAL 21116 ENGINEER BOB A. MAY
DocuSigned by: Bob A. May
5130B4E0B0B0B4...

DOCUMENT NOT CONSIDERED FINAL UNLESS ALL SIGNATURES COMPLETED

SITE #2
BRIDGE NO. 75
N 35° 30' 06"
W 77° 04' 50"

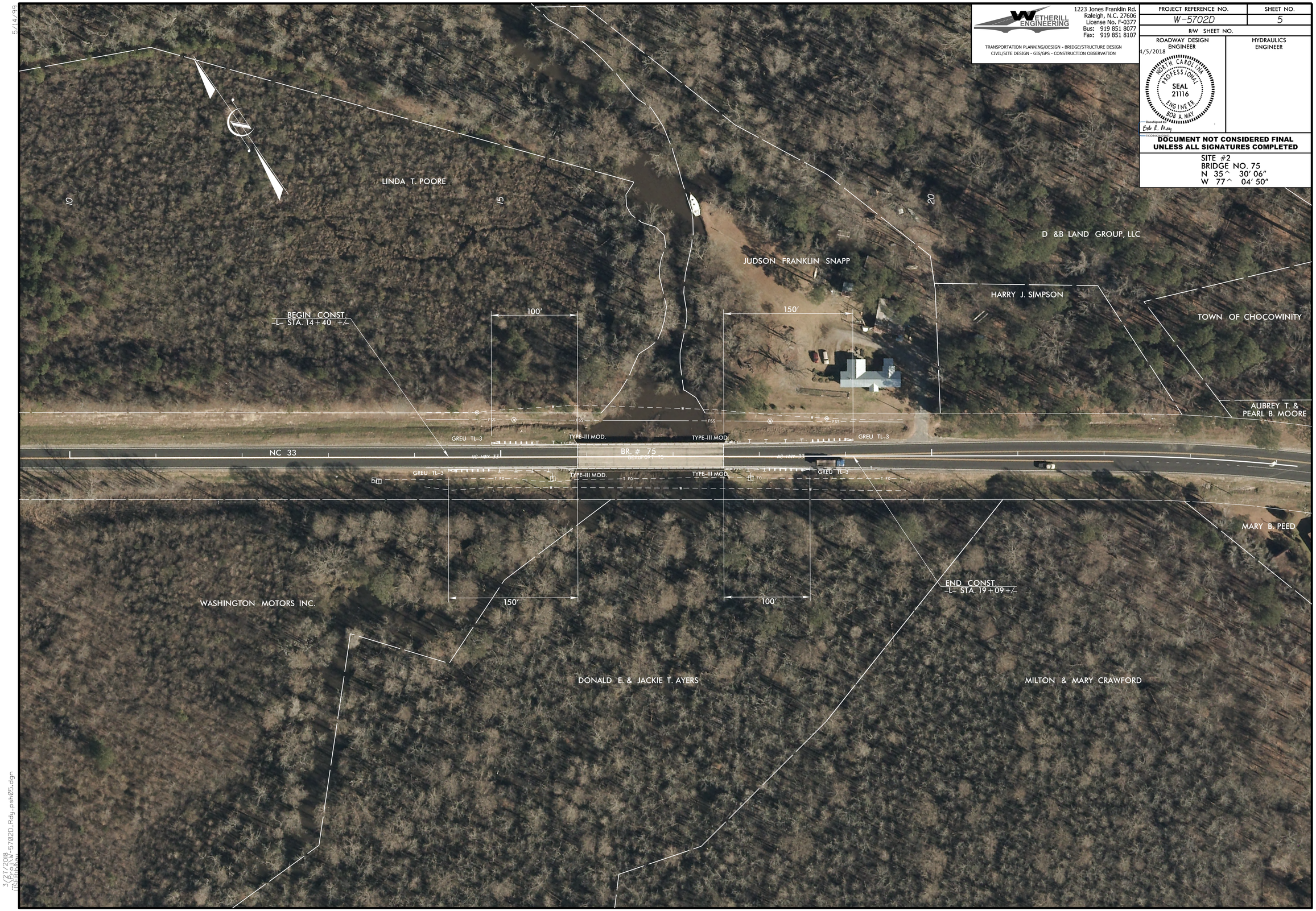

5/14/99

3/27/2018
W-5702D_Rdy_psh05.dgn
HISERROAD

DocuSign Envelope ID: 829D1AC1-AB81-4953-8A13-53872138A578

WETHERILL ENGINEERING
1223 Jones Franklin Rd.
Raleigh, N.C. 27606
License No. F-0377
Bus: 919 851 8077
Fax: 919 851 8107
TRANSPORTATION PLANNING/DESIGN - BRIDGE/STRUCTURE DESIGN
CIVIL/SITE DESIGN - GIS/GPS - CONSTRUCTION OBSERVATION

PROJECT REFERENCE NO.	SHEET NO.
W-5702D	6
R/W SHEET NO.	

ROADWAY DESIGN ENGINEER	HYDRAULICS ENGINEER
4/5/2018 NORTH CAROLINA PROFESSIONAL SEAL 21116 ENGINEER BOB A. MAY DocuSigned by: Bob A. May 5130844D8B0D4D0...	

DOCUMENT NOT CONSIDERED FINAL UNLESS ALL SIGNATURES COMPLETED

SITE #3
BRIDGE NO. 65
N 35° 27' 39"
W 77° 03' 41"

5/14/99

3/27/2018
W-5702D_Rdy_psh06.dgn
USER:

DocuSign Envelope ID: 829D1AC1-AB81-4953-8A13-53872138A578

WETHERILL ENGINEERING
1223 Jones Franklin Rd.
Raleigh, N.C. 27606
License No. F-0377
Bus: 919 851 8077
Fax: 919 851 8107
TRANSPORTATION PLANNING/DESIGN - BRIDGE/STRUCTURE DESIGN
CIVIL/SITE DESIGN - GIS/GPS - CONSTRUCTION OBSERVATION

PROJECT REFERENCE NO.	SHEET NO.
W-5702D	7
R/W SHEET NO.	

ROADWAY DESIGN ENGINEER
4/5/2018
NORTH CAROLINA PROFESSIONAL SEAL 21116 ENGINEER BOB A. MAY
DocuSigned by: Bob A. May
5130B4E3B0B4DD...

HYDRAULICS ENGINEER

DOCUMENT NOT CONSIDERED FINAL UNLESS ALL SIGNATURES COMPLETED

SITE #4
PIPES
N 35° 26' 21"
W 77° 02' 54"

5/14/99

3/27/2018
W-5702D_Rdy_psh07.dgn
HSERRON

DocuSign Envelope ID: 829D1AC1-AB81-4953-8A13-53872138A578

WETHERILL ENGINEERING
1223 Jones Franklin Rd.
Raleigh, N.C. 27606
License No. F-0377
Bus: 919 851 8077
Fax: 919 851 8107
TRANSPORTATION PLANNING/DESIGN - BRIDGE/STRUCTURE DESIGN
CIVIL/SITE DESIGN - GIS/GPS - CONSTRUCTION OBSERVATION

PROJECT REFERENCE NO.	SHEET NO.
W-5702D	8
R/W SHEET NO.	
ROADWAY DESIGN ENGINEER	HYDRAULICS ENGINEER

4/5/2018

NORTH CAROLINA PROFESSIONAL SEAL 21116 ENGINEER BOB A. MAY

DocuSigned by: Bob A. May
5130B4B0...

DOCUMENT NOT CONSIDERED FINAL UNLESS ALL SIGNATURES COMPLETED

SITE #5
CULVERT NO. 61
N 35° 22' 42"
W 76° 59' 02"

5/14/99

3/27/2018
R:\ROW\W-5702D_Rdy_psh08.dgn
USER:BOB

DocuSign Envelope ID: 829D1AC1-AB81-4953-8A13-53872138A578

WETHERILL ENGINEERING
1223 Jones Franklin Rd.
Raleigh, N.C. 27606
License No. F-0377
Bus: 919 851 8077
Fax: 919 851 8107
TRANSPORTATION PLANNING/DESIGN - BRIDGE/STRUCTURE DESIGN
CIVIL/SITE DESIGN - GIS/GPS - CONSTRUCTION OBSERVATION

PROJECT REFERENCE NO.	SHEET NO.
W-5702D	9
R/W SHEET NO.	
ROADWAY DESIGN ENGINEER	HYDRAULICS ENGINEER

4/5/2018
NORTH CAROLINA PROFESSIONAL SEAL 21116 ENGINEER BOB A. MAY
DocuSigned by: Bob A. May
5130844E0D0B4...

DOCUMENT NOT CONSIDERED FINAL UNLESS ALL SIGNATURES COMPLETED

SITE #6
PIPES
N 35° 20' 31"
W 76° 53' 36"

5/14/99

3/27/2018
USER: bmay
W5702D_Rdy_psh09.dgn

DocuSign Envelope ID: 829D1AC1-AB81-4953-8A13-53872138A578

WETHERILL ENGINEERING
1223 Jones Franklin Rd.
Raleigh, N.C. 27606
License No. F-0377
Bus: 919 851 8077
Fax: 919 851 8107
TRANSPORTATION PLANNING/DESIGN - BRIDGE/STRUCTURE DESIGN
CIVIL/SITE DESIGN - GIS/GPS - CONSTRUCTION OBSERVATION

PROJECT REFERENCE NO.	SHEET NO.
W-5702D	10
R/W SHEET NO.	
ROADWAY DESIGN ENGINEER	HYDRAULICS ENGINEER

4/5/2018
NORTH CAROLINA PROFESSIONAL SEAL 21116 ENGINEER BOB A. MAY
DocuSigned by: Bob A. May
5130B4C8B0B4B0...

DOCUMENT NOT CONSIDERED FINAL UNLESS ALL SIGNATURES COMPLETED

SITE #7
BRIDGE NO. 52
N 35° 19' 11"
W 76° 52' 18"

5/14/99

3/27/2018
W-5702D_Rdy_psh10.dgn
USERNAME

DocuSign Envelope ID: 829D1AC1-AB81-4953-8A13-53872138A578

5/14/99

WETHERILL ENGINEERING
1223 Jones Franklin Rd.
Raleigh, N.C. 27606
License No. F-0377
Bus: 919 851 8077
Fax: 919 851 8107

TRANSPORTATION PLANNING/DESIGN - BRIDGE/STRUCTURE DESIGN
CIVIL/SITE DESIGN - GIS/GPS - CONSTRUCTION OBSERVATION

PROJECT REFERENCE NO.	SHEET NO.
W-5702D	11
R/W SHEET NO.	
ROADWAY DESIGN ENGINEER	HYDRAULICS ENGINEER

4/5/2018
NORTH CAROLINA PROFESSIONAL SEAL 21116 ENGINEER BOB A. MAY
DocuSigned by: Bob A. May
513C64C8D8C4D0...

DOCUMENT NOT CONSIDERED FINAL UNLESS ALL SIGNATURES COMPLETED

SITE #8
CULVERT NO. 49
N 35° 18' 03"
W 76° 49' 40"

3/27/2018
INSERTED W-5702D_Rdy_pshtl.dgn

DocuSign Envelope ID: 829D1AC1-AB81-4953-8A13-53872138A578

WETHERILL ENGINEERING
1223 Jones Franklin Rd.
Raleigh, N.C. 27606
License No. F-0377
Bus: 919 851 8077
Fax: 919 851 8107
TRANSPORTATION PLANNING/DESIGN - BRIDGE/STRUCTURE DESIGN
CIVIL/SITE DESIGN - GIS/GPS - CONSTRUCTION OBSERVATION

PROJECT REFERENCE NO.	SHEET NO.
W-5702D	12
R/W SHEET NO.	
ROADWAY DESIGN ENGINEER	HYDRAULICS ENGINEER

4/5/2018
NORTH CAROLINA PROFESSIONAL SEAL 21116 ENGINEER BOB A. MAY
DocuSigned by: Bob A. May
5130B4B...

DOCUMENT NOT CONSIDERED FINAL UNLESS ALL SIGNATURES COMPLETED

SITE #9
BRIDGE NO. 48
N 35° 18' 03"
W 76° 46' 34"

MATCHLINE -L- STA. 22+00.00 SSE SHT.13

5/14/99

3/27/2018
W-5702D_Rdy_psht12.dgn
USER: BOB.MAY

DocuSign Envelope ID: 829D1AC1-AB81-4953-8A13-53872138A578

WETHERILL ENGINEERING
1223 Jones Franklin Rd.
Raleigh, N.C. 27606
License No. F-0377
Bus: 919 851 8077
Fax: 919 851 8107
TRANSPORTATION PLANNING/DESIGN - BRIDGE/STRUCTURE DESIGN
CIVIL/SITE DESIGN - GIS/GPS - CONSTRUCTION OBSERVATION

PROJECT REFERENCE NO.	SHEET NO.
W-5702D	13
R/W SHEET NO.	
ROADWAY DESIGN ENGINEER	HYDRAULICS ENGINEER

4/5/2018
NORTH CAROLINA PROFESSIONAL SEAL 21116 ENGINEER BOB A. MAY
DocuSigned by: Bob A. May
5130B4E4B0B4B0...

DOCUMENT NOT CONSIDERED FINAL UNLESS ALL SIGNATURES COMPLETED

SITE #9
BRIDGE NO. 48
N 35° 18' 03"
W 76° 46' 34"

MATCHLINE -L- STA.22+00.00 SSE SHT.13

5/14/99

3/27/2018
12:29:34 PM
W-5702D_Rdy_psh13.dgn
USER: rbaw

DocuSign Envelope ID: 829D1AC1-AB81-4953-8A13-53872138A578

WETHERILL ENGINEERING
1223 Jones Franklin Rd.
Raleigh, N.C. 27606
License No. F-0377
Bus: 919 851 8077
Fax: 919 851 8107
TRANSPORTATION PLANNING/DESIGN - BRIDGE/STRUCTURE DESIGN
CIVIL/SITE DESIGN - GIS/GPS - CONSTRUCTION OBSERVATION

PROJECT REFERENCE NO.	SHEET NO.
W-5702D	14
R/W SHEET NO.	
ROADWAY DESIGN ENGINEER	HYDRAULICS ENGINEER

4/5/2018
NORTH CAROLINA PROFESSIONAL SEAL 21116 ENGINEER BOB A. MAY
DocuSigned by: Bob A. May
5130B4E3B0B4B0...

DOCUMENT NOT CONSIDERED FINAL UNLESS ALL SIGNATURES COMPLETED

SITE #10
BRIDGE NO. 3
N 34° 50' 50"
W 76° 45' 22"

5/14/99

3/27/2018
R:\Proj\W-5702D_Rdy_psht4.dgn
USERRAY

DocuSign Envelope ID: 829D1AC1-AB81-4953-8A13-53872138A578

STATE OF NORTH CAROLINA
DIVISION OF HIGHWAYS

TRANSPORTATION MANAGEMENT PLAN

BEAUFORT, CARTERET, CRAVEN, & PITT COUNTIES

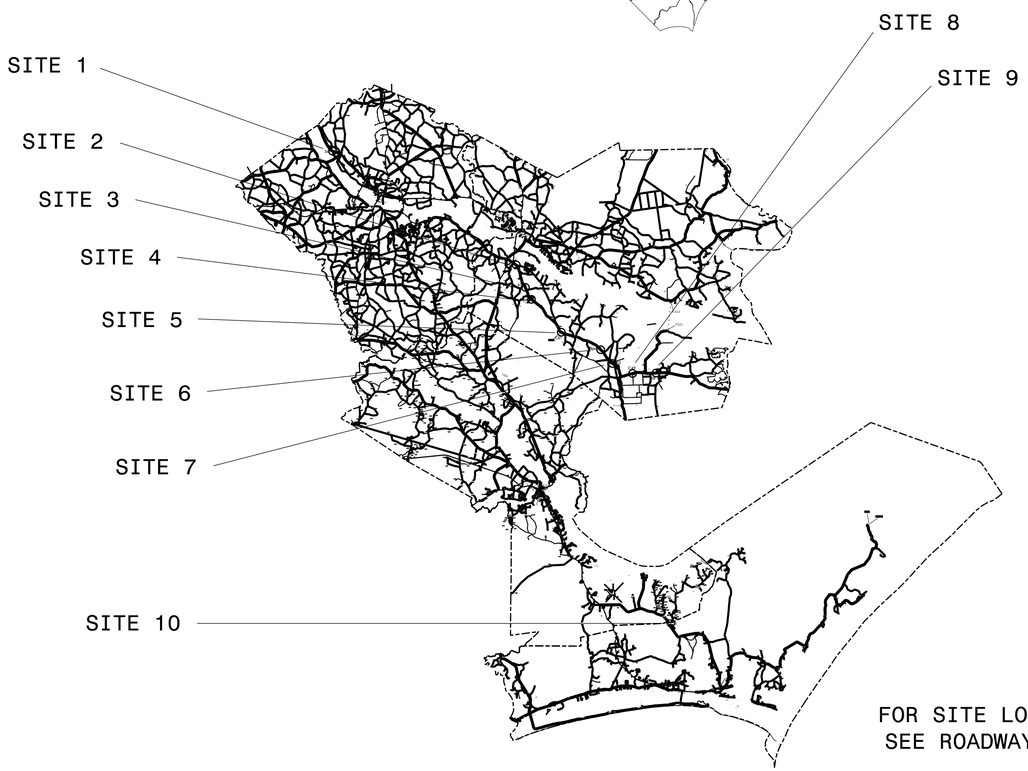

FOR SITE LOCATIONS
SEE ROADWAY PLANS

INDEX OF SHEETS

SHEET NO.	TITLE
TMP-01	TITLE SHEET, VICINITY MAP, AND INDEX OF SHEETS
TMP-02	LIST OF APPLICABLE ROADWAY STANDARD DRAWINGS, GENERAL NOTES, AND PHASING

SHEET NO.
TMP-01

W-5702D

TIP PROJECT:

DOCUMENT NOT CONSIDERED FINAL
UNLESS ALL SIGNATURES COMPLETED

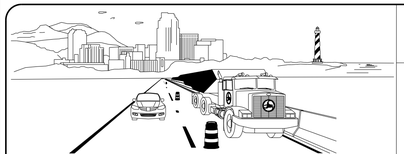

WORK ZONE SAFETY & MOBILITY
"from the MOUNTAINS to the COAST"

N.C.D.O.T. WORK ZONE TRAFFIC CONTROL
1561 MAIL SERVICE CENTER (MSC) RALEIGH, NC 27699-1561
750 N. GREENFIELD PARKWAY, GARNER, NC 27529 (DELIVERY)
PHONE: (919) 814-5000 FAX: (919) 771-2745

J. E. Hummer, PhD, PE	STATE TRAFFIC MANAGEMENT ENGINEER
J. S. Kite, PE	TRAFFIC CONTROL PROJECT ENGINEER
Matt Springer, PE	TRAFFIC CONTROL PROJECT DESIGN ENGINEER
S. B. Jennings	TRAFFIC CONTROL DESIGN ENGINEER

DIVISION OF HIGHWAYS · STATE OF NORTH CAROLINA · DEPARTMENT OF TRANSPORTATION · WORK ZONE TRAFFIC CONTROL

WETHERILL ENGINEERING
1223 Jones Franklin Rd.
Raleigh, N.C. 27606
Liscense No. F-0377
Bus: 919 851 8077
Fax: 919 851 8107

TRANSPORTATION PLANNING/DESIGN - BRIDGE/STRUCTURE DESIGN
CIVIL/SITE DESIGN - GIS/GPS - CONSTRUCTION OBSERVATION

APPROVED: DocuSigned by: Bob A. May 513D6442A429493...

DATE: 4/5/2018

SEAL

NORTH CAROLINA PROFESSIONAL SEAL 21116 ENGINEER BOB A. MAY

9/22/2017
P:\2017\I7176_01_W-5702D_Div2_Guardrail\Traffic\TMP\DTL\2017_I7176_01_W-5702D_Div2_Guardrail_Traffic_TMP_DTL_01_TTL.dgn
User:AHayes

DocuSign Envelope ID: 829D1AC1-AB81-4953-8A13-53872138A578

PROJ. REFERENCE NO.	SHEET NO.
W-5702D	TMP-02

ROADWAY STANDARD DRAWINGS

THE FOLLOWING ROADWAY STANDARDS AS SHOWN IN "ROADWAY STANDARD DRAWINGS" - PROJECT SERVICES UNIT - N.C. DEPARTMENT OF TRANSPORTATION - RALEIGH, N.C., DATED JANUARY 2012 ARE APPLICABLE TO THIS PROJECT AND BY REFERENCE HEREBY ARE CONSIDERED A PART OF THESE PLANS:

STD. NO.	TITLE
1101.01	WORK ZONE ADVANCE WARNING SIGNS
1101.02	TEMPORARY LANE CLOSURES
1101.04	TEMPORARY SHOULDER CLOSURES
1101.05	WORK ZONE VEHICLE ACCESSES
1101.11	TRAFFIC CONTROL DESIGN TABLES
1110.02	PORTABLE WORK ZONE SIGNS
1130.01	DRUM
1135.01	CONES
1150.01	FLAGGING DEVICES
1165.01	WORK VEHICLE LIGHTING SYSTEMS AND TMA DELINEATION
1180.01	SKINNY-DRUM
1261.01	GUARDRAIL AND BARRIER DELINEATORS - INSTALLATION SPACING
1261.02	GUARDRAIL AND BARRIER DELINEATORS - TYPES AND MOUNTING
1262.01	GUARDRAIL END DELINEATION

GENERAL NOTES

CHANGES MAY BE REQUIRED WHEN PHYSICAL DIMENSIONS IN THE DETAIL DRAWINGS, STANDARD DETAILS, AND ROADWAY DETAILS ARE NOT ATTAINABLE TO MEET FIELD CONDITIONS OR RESULT IN DUPLICATE OR UNDESIRED OVERLAPPING OF DEVICES. MODIFICATION MAY INCLUDE: MOVING, SUPPLEMENTING, COVERING, OR REMOVAL OF DEVICES AS DIRECTED BY THE ENGINEER.

THE FOLLOWING GENERAL NOTES APPLY AT ALL TIMES FOR THE DURATION OF THE CONSTRUCTION PROJECT EXCEPT WHEN OTHERWISE NOTED IN THE PLAN OR DIRECTED BY THE ENGINEER.

LANE AND SHOULDER CLOSURE REQUIREMENTS

A) REMOVE LANE CLOSURE DEVICES FROM THE LANE WHEN WORK IS NOT BEING PERFORMED BEHIND THE LANE CLOSURE OR WHEN A LANE CLOSURE IS NO LONGER NEEDED OR AS DIRECTED BY THE ENGINEER.

B) WHEN PERSONNEL AND/OR EQUIPMENT ARE WORKING WITHIN 15 FT OF AN OPEN TRAVEL LANE, CLOSE THE NEAREST OPEN SHOULDER USING ROADWAY STANDARD DRAWING NO. 1101.04 UNLESS THE WORK AREA IS PROTECTED BY BARRIER OR GUARDRAIL OR A LANE CLOSURE IS INSTALLED.

C) WHEN PERSONNEL AND/OR EQUIPMENT ARE WORKING ON THE SHOULDER ADJACENT TO AN UNDIVIDED FACILITY AND WITHIN 5 FT OF AN OPEN TRAVEL LANE, CLOSE THE NEAREST OPEN TRAVEL LANE USING ROADWAY STANDARD DRAWING NO. 1101.02 UNLESS THE WORK AREA IS PROTECTED BY BARRIER OR GUARDRAIL.

D) WHEN PERSONNEL AND/OR EQUIPMENT ARE WORKING WITHIN A LANE OF TRAVEL OF AN UNDIVIDED OR DIVIDED FACILITY, CLOSE THE LANE ACCORDING TO THE TRAFFIC CONTROL PLANS, ROADWAY STANDARD DRAWINGS, OR AS DIRECTED BY THE ENGINEER. CONDUCT THE WORK SO THAT ALL PERSONNEL AND/OR EQUIPMENT REMAIN WITHIN THE CLOSED TRAVEL LANE.

E) DO NOT WORK SIMULTANEOUSLY WITHIN 15 FT ON BOTH SIDES OF AN OPEN TRAVELWAY, RAMP, OR LOOP WITHIN THE SAME LOCATION UNLESS PROTECTED WITH GUARDRAIL OR BARRIER.

TRAFFIC PATTERN ALTERATIONS

F) NOTIFY THE ENGINEER TWENTY ONE (21) CALENDAR DAYS PRIOR TO ANY TRAFFIC PATTERN ALTERATION.

SIGNING

G) INSTALL ADVANCE WORK ZONE WARNING SIGNS WHEN WORK IS WITHIN 40 FT FROM THE EDGE OF TRAVEL LANE AND NO MORE THAN THREE (3) DAYS PRIOR TO THE BEGINNING OF CONSTRUCTION.

H) ENSURE ALL NECESSARY SIGNING IS IN PLACE PRIOR TO ALTERING ANY TRAFFIC PATTERN.

TRAFFIC CONTROL DEVICES

I) WHEN LANE CLOSURES ARE NOT IN EFFECT SPACE CHANNELIZING DEVICES IN WORK AREAS NO GREATER IN FEET THAN TWICE THE POSTED SPEED LIMIT (MPH) EXCEPT, 10 FT ON-CENTER IN RADII, AND 3 FT OFF THE EDGE OF AN OPEN TRAVELWAY. REFER TO STANDARD SPECIFICATIONS FOR ROADS AND STRUCTURES SECTIONS 1130 (DRUMS), 1135 (CONES) AND 1180 (SKINNY DRUMS) FOR ADDITIONAL REQUIREMENTS.

J) PLACE ADDITIONAL SETS OF THREE CHANNELIZING DEVICES PERPENDICULAR TO THE EDGE OF TRAVELWAY ON 200 FT CENTERS WHEN UNOPENED LANES ARE CLOSED TO TRAFFIC.

PHASING

NOTE: ALL SITES ARE INDEPENTANT, AND ANY SITE(S) CAN BE CONSTRUCTED SIMULTANEOUSLY. THE FOLLOWING PHASING PERTAINS TO ALL SITES. ALL SIGNS ARE PORTABLE.

STEP 1) USING ROADWAY STANDARD (RSD) 1101.01, SHEET 3 OF 3, AND RSD 1101.02, SHEET 1 OF 15 INSTALL GUARDRAIL IN THE SPECIFIED SITE. REMOVE SIGNING AND DEVICES AND RETURN TRAFFIC TO THE EXISTING PATTERN AT THE END OF THE WORK DAY.

WETHERILL ENGINEERING
1223 Jones Franklin Rd.
Raleigh, N.C. 27606
License No. F-0377
Bus: 919 851 8077
Fax: 919 851 8107
TRANSPORTATION PLANNING/DESIGN - BRIDGE/STRUCTURE DESIGN
CIVIL/SITE DESIGN - GIS/GPS - CONSTRUCTION OBSERVATION

APPROVED: DocuSigned by: Bob A. May 51D8442442934 93...
DATE: 4/5/2018
SEAL

NORTH CAROLINA PROFESSIONAL SEAL 21116 ENGINEER BOB A. MAY

DOCUMENT NOT CONSIDERED FINAL UNLESS ALL SIGNATURES COMPLETED

DIVISION OF HIGHWAYS · STATE OF NORTH CAROLINA · DEPARTMENT OF TRANSPORTATION · WORK ZONE TRAFFIC CONTROL

ROADWAY STANDARD DRAWINGS, GENERAL NOTES, & PHASING

9/22/2017
P:\2017\17176.01_W-5702D_Div2_Guardrail\Traffic\TMP\DTL\2017_17176.01_W-5702D_Div2_Guardrail_Traffic_TMP_DTL_02_GNP.dgn
User:AHayes

09/08/99

TIP PROJECT: W-5702D

STATE OF NORTH CAROLINA
DIVISION OF HIGHWAYS

T.I.P. NO.	SHEET NO.
W-5702D	UO-1

NOTE:
ALL UTILITY WORK SHOWN ON THIS SHEET WILL BE DONE BY OTHERS. NO PAYMENT WILL BE MADE TO THE CONTRACTOR FOR UTILITY WORK SHOWN ON THIS SHEET.

UTILITIES BY OTHERS PLANS
PITT, BEAUFORT & CRAVEN COUNTIES

LOCATION: NC 33 IN BEAUFORT COUNTY BETWEEN MP 9.69 AND MP 34.50. NC 33 IN PITT COUNTY AT MP 26.72. SR 1700 (ADAMS CREEK RD.) IN CRAVEN COUNTY AT MP 0.00 AT THE CARTERET COUNTY LINE.

TYPE OF WORK: TELEPHONE AND CATV RELOCATION

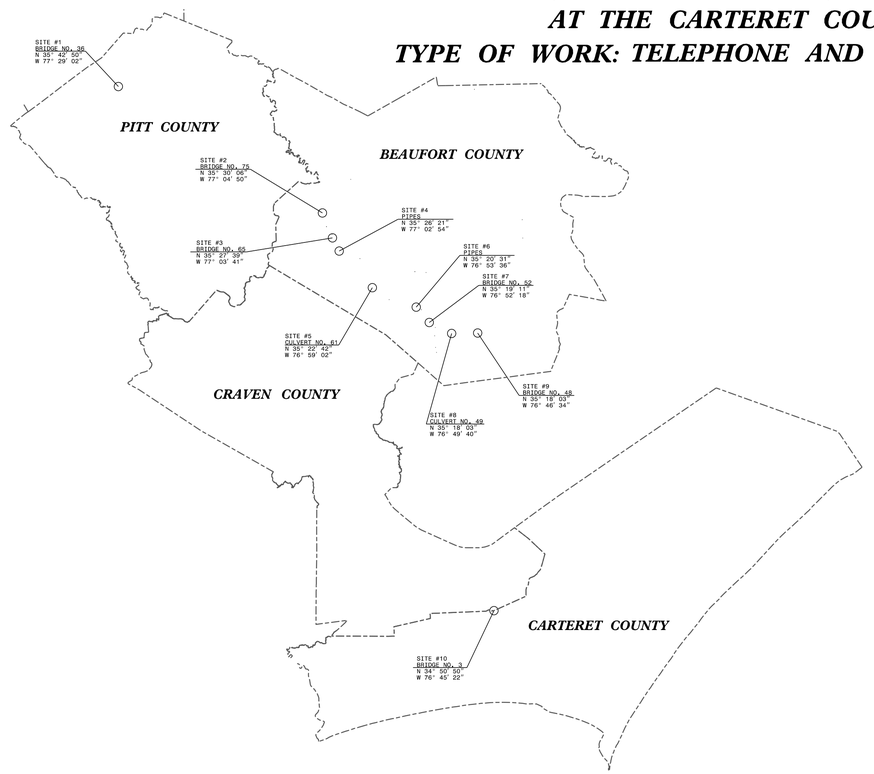

GRAPHIC SCALES

50 25 0 50 100
PLANS

50 25 0 50 100
PROFILE (HORIZONTAL)

10 5 0 10 20
PROFILE (VERTICAL)

INDEX OF SHEETS

SHEET NO.:	*DESCRIPTION:*
UO-1	*TITLE SHEET*
UO-2 THRU UO-12	*UBO PLAN SHEETS*

UTILITY OWNERS WITH CONFLICTS

(A) COMMUNICATION - CENTURYLINK
(B) COMMUNICATION - SPECTRUM

PREPARED IN THE OFFICE OF:

WETHERILL ENGINEERING
1223 Jones Franklin Rd.
Raleigh, N.C. 27606
License No. F-0377
Bus: 919 851 8077
Fax: 919 851 8107

TRANSPORTATION PLANNING/DESIGN - BRIDGE/STRUCTURE DESIGN
CIVIL/SITE DESIGN - GIS/GPS - CONSTRUCTION OBSERVATION

John D. Schriner, PLS — *UTILITY PROJECT MANAGER*
John D. Schriner, PLS — *PROJECT UTILITY COORDINATOR*

DIVISION OF HIGHWAYS
DIVISION 2
105 PACTOLUS HWY
GREENVILLE NC, 27835

LANG JONES — *DIVISION PROJECT MANAGER*

$$$$SYSTIME$$$$
$$$$DGN$$$$
$$$$USERNAME$$$$

PROJECT REFERENCE NO.	SHEET NO.
W-5702D	U0-2
THIS SHEET CORRESPONDS TO RDY-4	

UTILITIES BY OTHERS

ALL PROPOSED UTILITY WORK SHOWN ON THIS SHEET WILL BE DONE BY OTHERS. NO PAYMENT WILL BE MADE TO THE CONTRACTOR FOR PROPOSED UTILITY WORK SHOWN ON THIS SHEET.

WETHERILL ENGINEERING
1223 Jones Franklin Rd.
Raleigh, N.C. 27606
License No. F-0377
Bus: 919 851 8077
Fax: 919 851 8107

TRANSPORTATION PLANNING/DESIGN - BRIDGE/STRUCTURE DESIGN
CIVIL/SITE DESIGN - GIS/GPS - CONSTRUCTION OBSERVATION

SITE #1
BRIDGE NO. 36
N 35° 42' 50"
W 77° 29' 02"

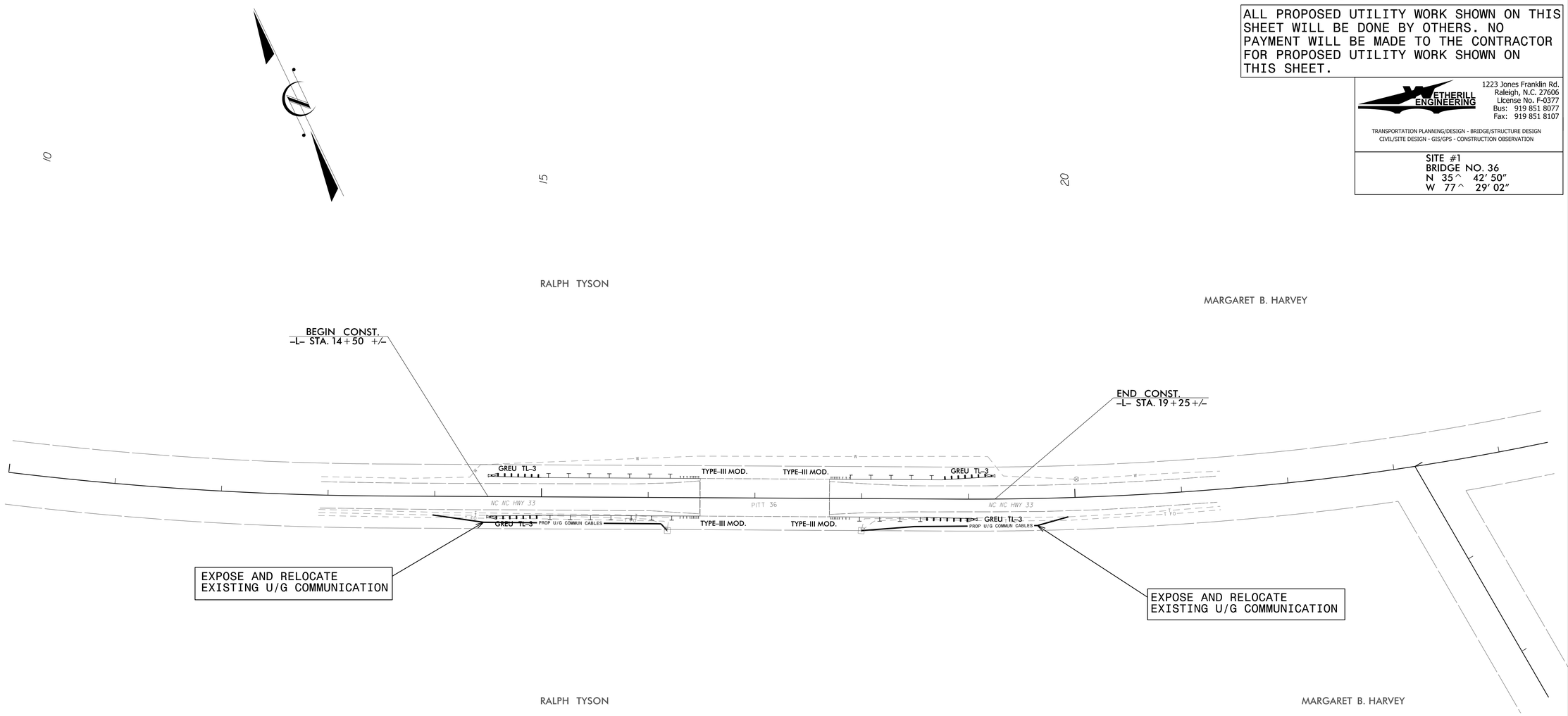

5/14/99

4:58:28 PM
Engineering\TIB\Proj\W-5702D_ut_rdy4_U02_psh.dgn

PROJECT REFERENCE NO.	SHEET NO.
W-5702D	U0-3
THIS SHEET CORRESPONDS TO RDY-5	

UTILITIES BY OTHERS

ALL PROPOSED UTILITY WORK SHOWN ON THIS SHEET WILL BE DONE BY OTHERS. NO PAYMENT WILL BE MADE TO THE CONTRACTOR FOR PROPOSED UTILITY WORK SHOWN ON THIS SHEET.

ETHERILL ENGINEERING
1223 Jones Franklin Rd.
Raleigh, N.C. 27606
License No. F-0377
Bus: 919 851 8077
Fax: 919 851 8107

TRANSPORTATION PLANNING/DESIGN - BRIDGE/STRUCTURE DESIGN
CIVIL/SITE DESIGN - GIS/GPS - CONSTRUCTION OBSERVATION

SITE #2
BRIDGE NO. 75
N 35^ 30' 06"
W 77^ 04' 50"

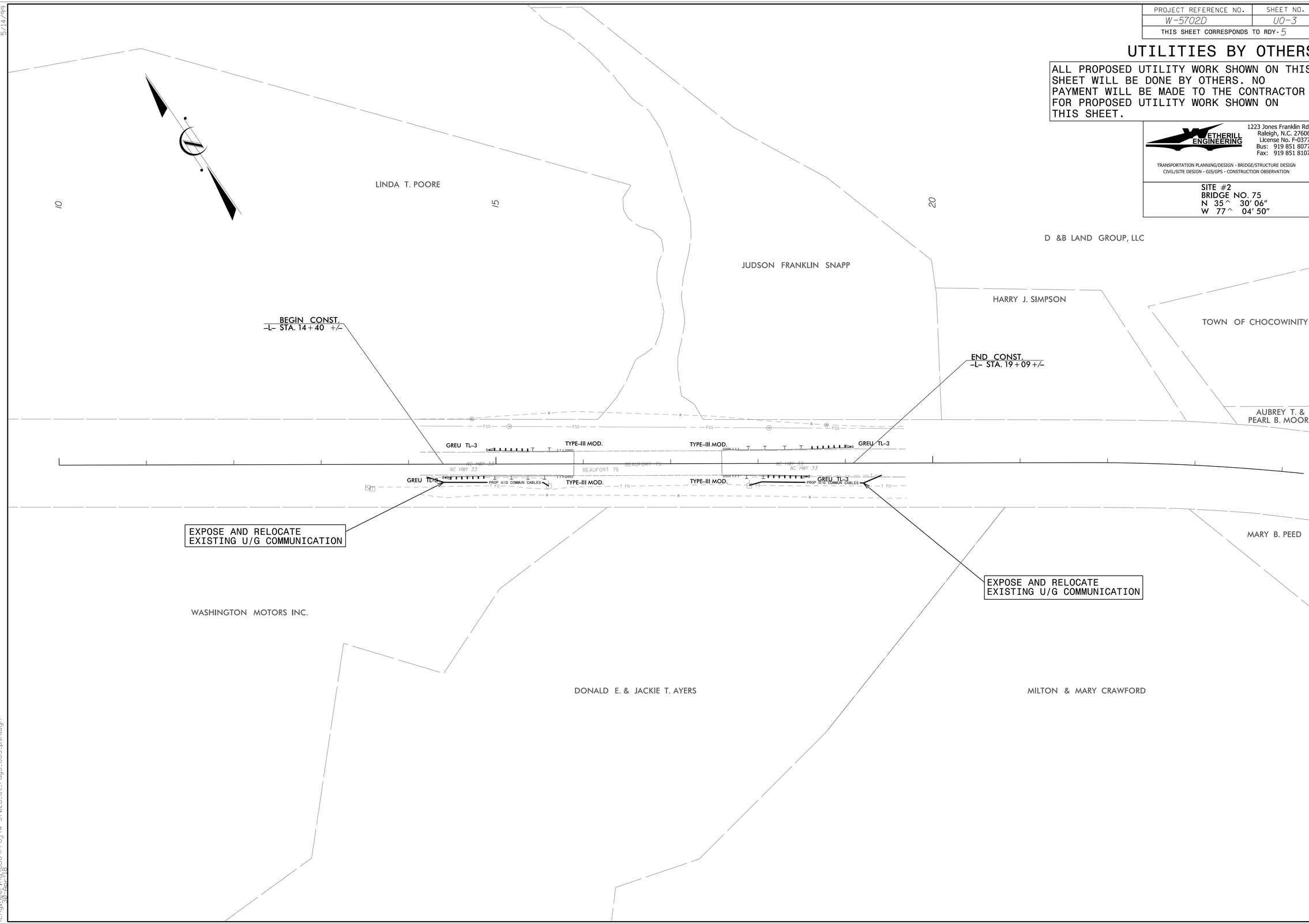

5/14/99

4:53:48 PM
Engineering\UBO\Proj\W-5702D_ut_rdy5_U03_psh.dgn
30-Apr-98

PROJECT REFERENCE NO.	SHEET NO.
W-5702D	U0-4
THIS SHEET CORRESPONDS TO RDY-6	

UTILITIES BY OTHERS

ALL PROPOSED UTILITY WORK SHOWN ON THIS SHEET WILL BE DONE BY OTHERS. NO PAYMENT WILL BE MADE TO THE CONTRACTOR FOR PROPOSED UTILITY WORK SHOWN ON THIS SHEET.

WETHERILL ENGINEERING
1223 Jones Franklin Rd.
Raleigh, N.C. 27606
License No. F-0377
Bus: 919 851 8077
Fax: 919 851 8107

TRANSPORTATION PLANNING/DESIGN - BRIDGE/STRUCTURE DESIGN
CIVIL/SITE DESIGN - GIS/GPS - CONSTRUCTION OBSERVATION

SITE #3
BRIDGE NO. 65
N 35° 27' 39"
W 77° 03' 41"

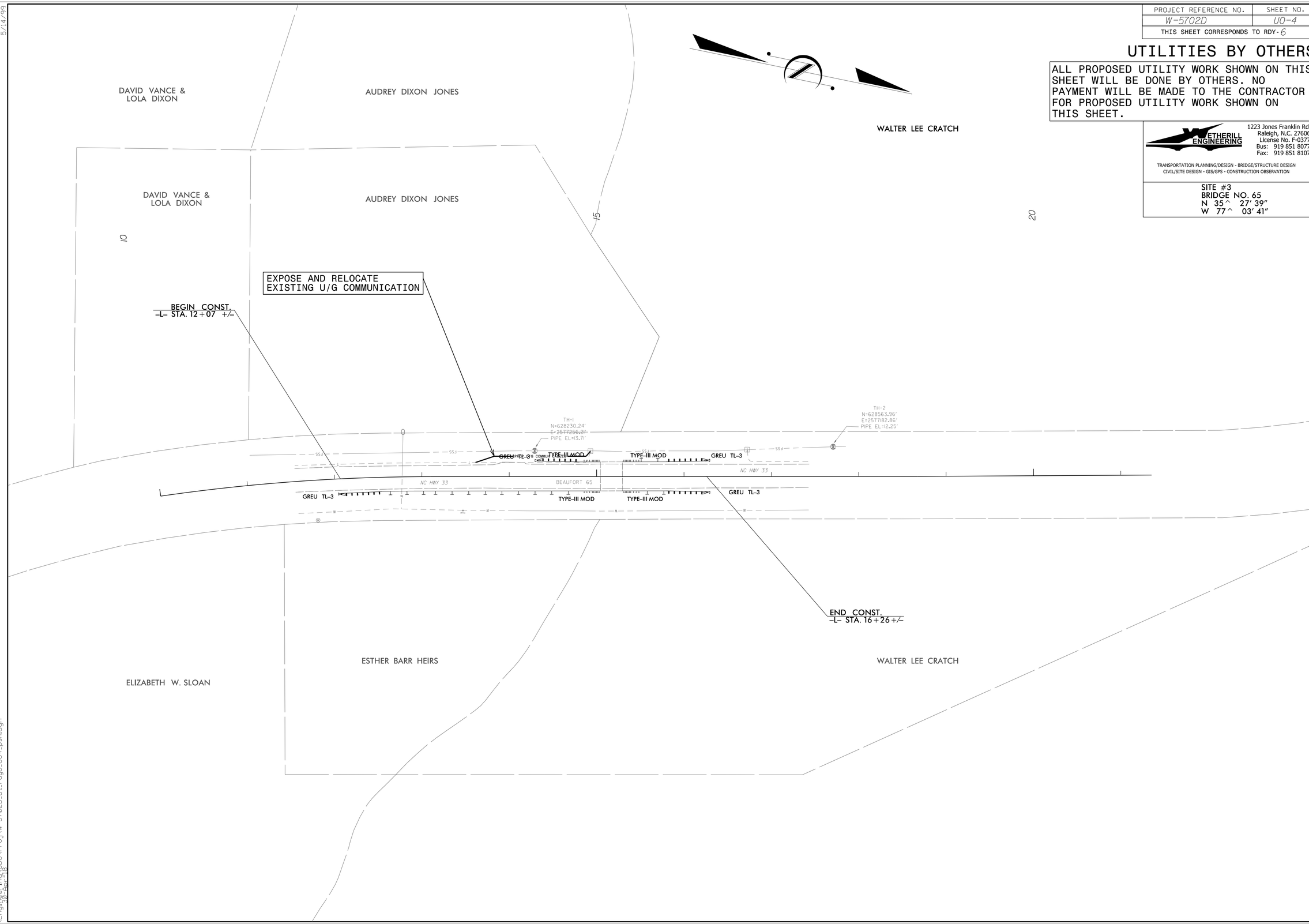

5/14/99

4:47:36 PM
20-Sep-99

ETHERILL ENGINEERING
1223 Jones Franklin Rd.
Raleigh, N.C. 27606
License No. F-0377
Bus: 919 851 8077
Fax: 919 851 8107
TRANSPORTATION PLANNING/DESIGN - BRIDGE/STRUCTURE DESIGN
CIVIL/SITE DESIGN - GIS/GPS - CONSTRUCTION OBSERVATION

PROJECT REFERENCE NO.	SHEET NO.
W-5702D	U0-5

UTILITIES BY OTHERS

NOTE:
ALL UTILITY WORK SHOWN ON THIS SHEET WILL BE DONE BY OTHERS. NO PAYMENT WILL BE MADE TO THE CONTRACTOR FOR UTILITY WORK SHOWN ON THIS SHEET.

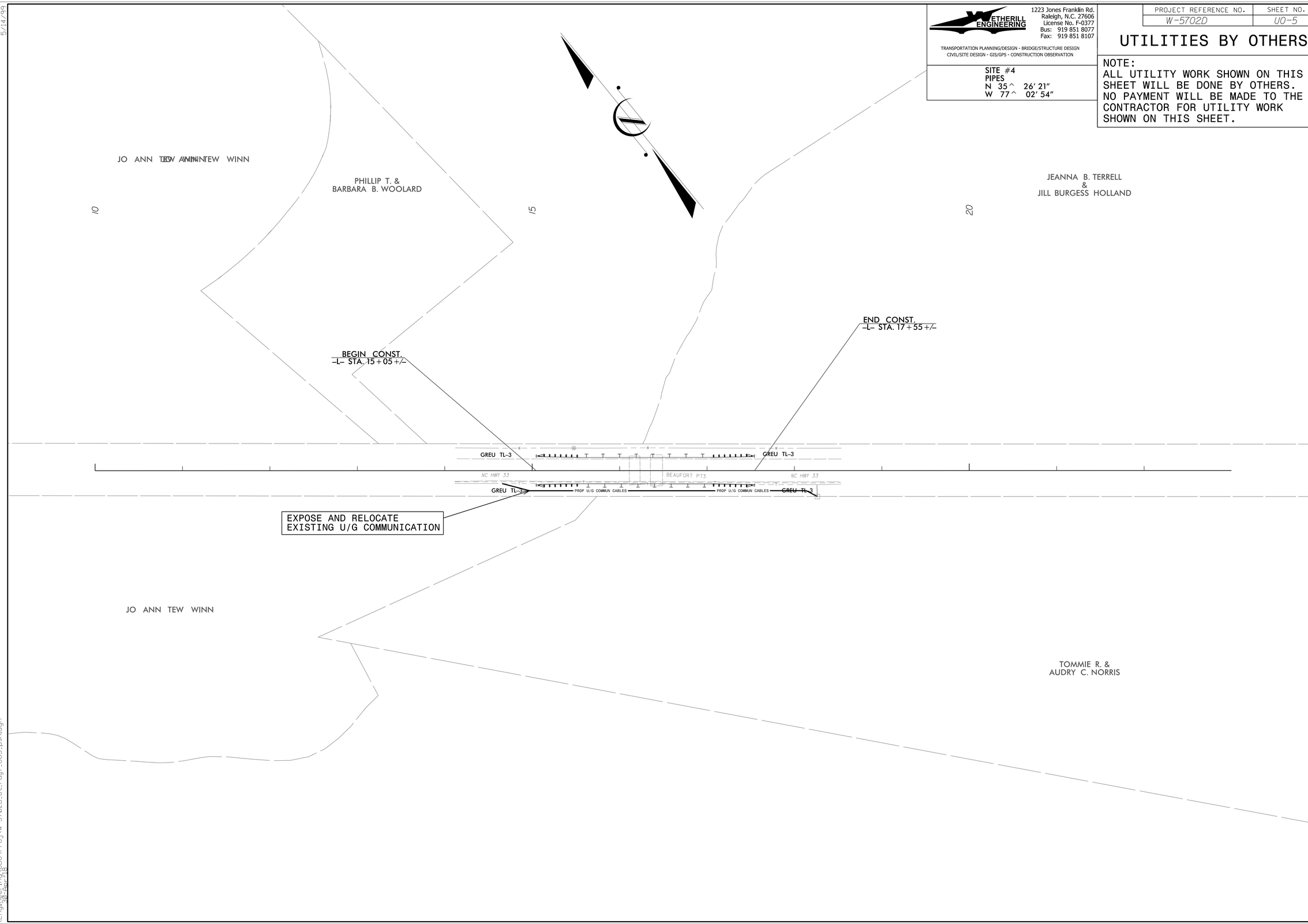

5/14/99

4:40:40 PM
Engineering\BOX\Proj\W-5702D_ut_rdy7_U05_psh.dgn
30-Apr-99

PROJECT REFERENCE NO.	SHEET NO.
W-5702D	U0-6
THIS SHEET CORRESPONDS TO RDY-8	

UTILITIES BY OTHERS

ALL PROPOSED UTILITY WORK SHOWN ON THIS SHEET WILL BE DONE BY OTHERS. NO PAYMENT WILL BE MADE TO THE CONTRACTOR FOR PROPOSED UTILITY WORK SHOWN ON THIS SHEET.

WETHERILL ENGINEERING
1223 Jones Franklin Rd.
Raleigh, N.C. 27606
License No. F-0377
Bus: 919 851 8077
Fax: 919 851 8107

TRANSPORTATION PLANNING/DESIGN - BRIDGE/STRUCTURE DESIGN
CIVIL/SITE DESIGN - GIS/GPS - CONSTRUCTION OBSERVATION

SITE #5
CULVERT NO. 61
N 35^ 22' 42"
W 76^ 59' 02"

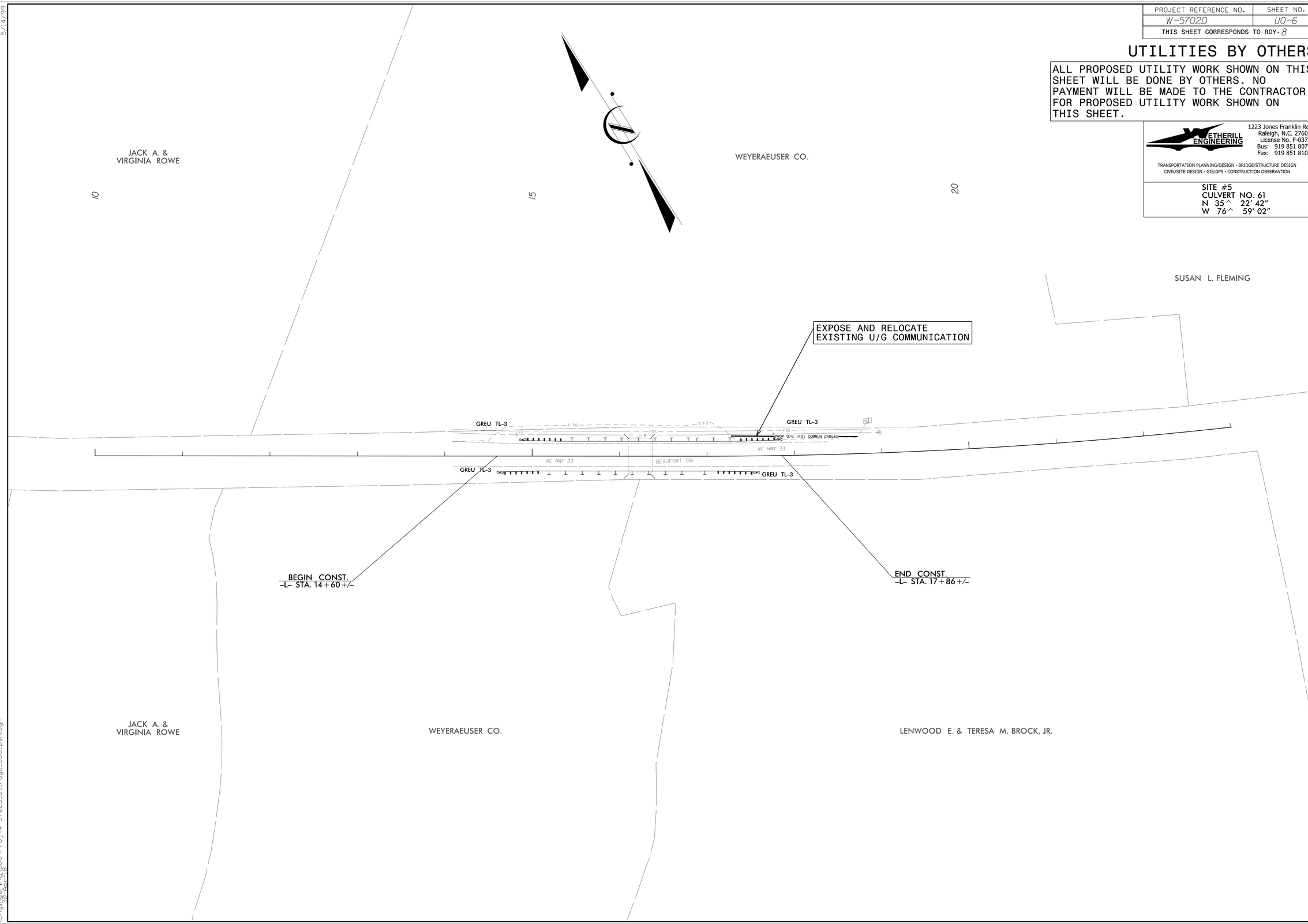

5/14/99
4:39:24 PM
Engineering\HBO\Proj\W-5702D_ut_rdy8_U06_psh.dgn
Date: 8/

PROJECT REFERENCE NO.	SHEET NO.
W-5702D	U0-7
THIS SHEET CORRESPONDS TO RDY-9	

UTILITIES BY OTHERS

ALL PROPOSED UTILITY WORK SHOWN ON THIS SHEET WILL BE DONE BY OTHERS. NO PAYMENT WILL BE MADE TO THE CONTRACTOR FOR PROPOSED UTILITY WORK SHOWN ON THIS SHEET.

WETHERILL ENGINEERING
1223 Jones Franklin Rd.
Raleigh, N.C. 27606
License No. F-0377
Bus: 919 851 8077
Fax: 919 851 8107

TRANSPORTATION PLANNING/DESIGN - BRIDGE/STRUCTURE DESIGN
CIVIL/SITE DESIGN - GIS/GPS - CONSTRUCTION OBSERVATION

SITE #6
PIPES
N 35^ 20' 31"
W 76^ 53' 36"

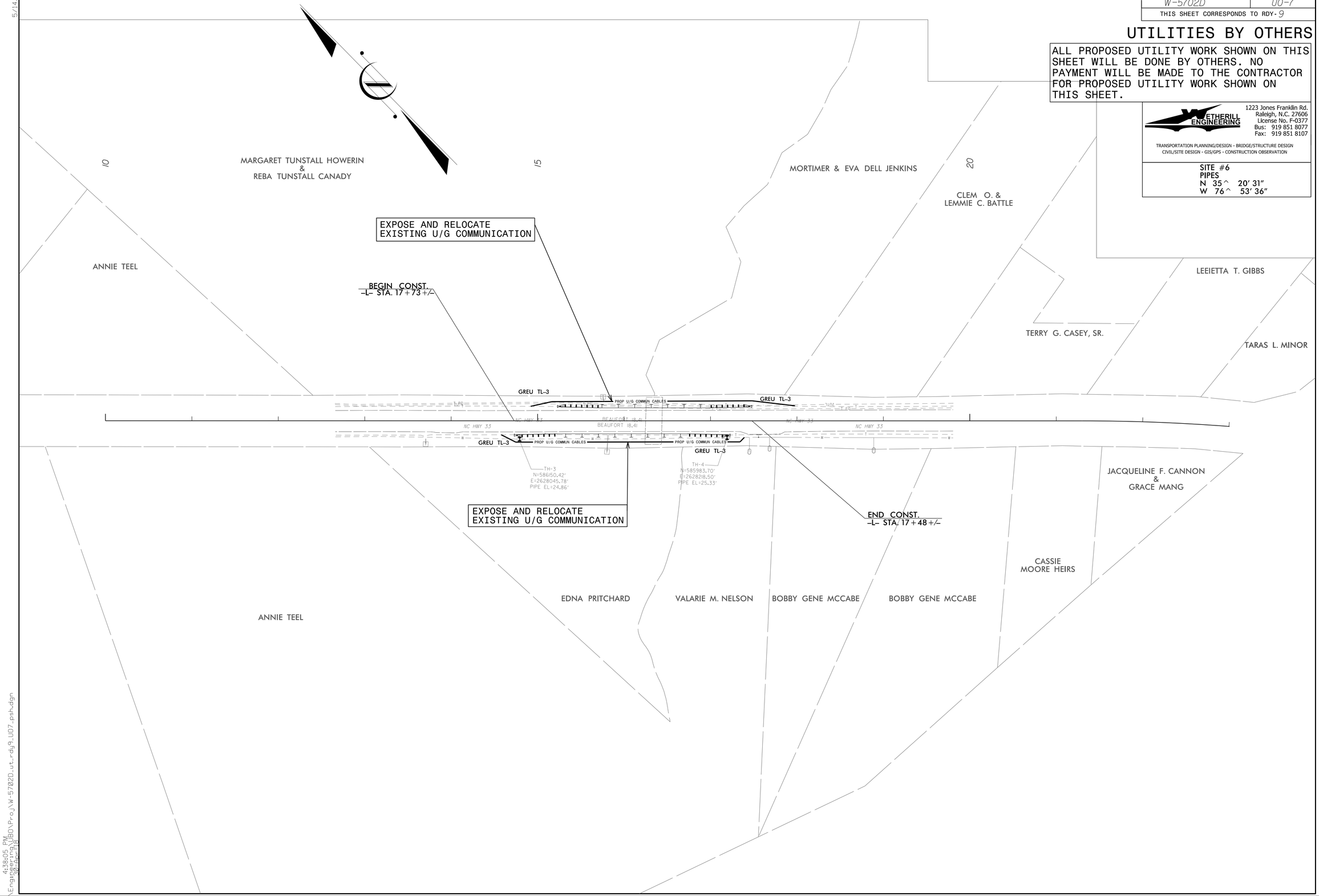

5/14/99

4:38:05 PM
Engineering\TIB0\Proj\W-5702D_ut_rdy9_U07_psh.dgn
30-Apr-18

PROJECT REFERENCE NO.	SHEET NO.
W-5702D	U0-8
THIS SHEET CORRESPONDS TO RDY-10	

UTILITIES BY OTHERS

ALL PROPOSED UTILITY WORK SHOWN ON THIS SHEET WILL BE DONE BY OTHERS. NO PAYMENT WILL BE MADE TO THE CONTRACTOR FOR PROPOSED UTILITY WORK SHOWN ON THIS SHEET.

ETHERILL ENGINEERING
1223 Jones Franklin Rd.
Raleigh, N.C. 27606
License No. F-0377
Bus: 919 851 8077
Fax: 919 851 8107

TRANSPORTATION PLANNING/DESIGN - BRIDGE/STRUCTURE DESIGN
CIVIL/SITE DESIGN - GIS/GPS - CONSTRUCTION OBSERVATION

SITE #7
BRIDGE NO. 52
N 35° 19' 11"
W 76° 52' 18"

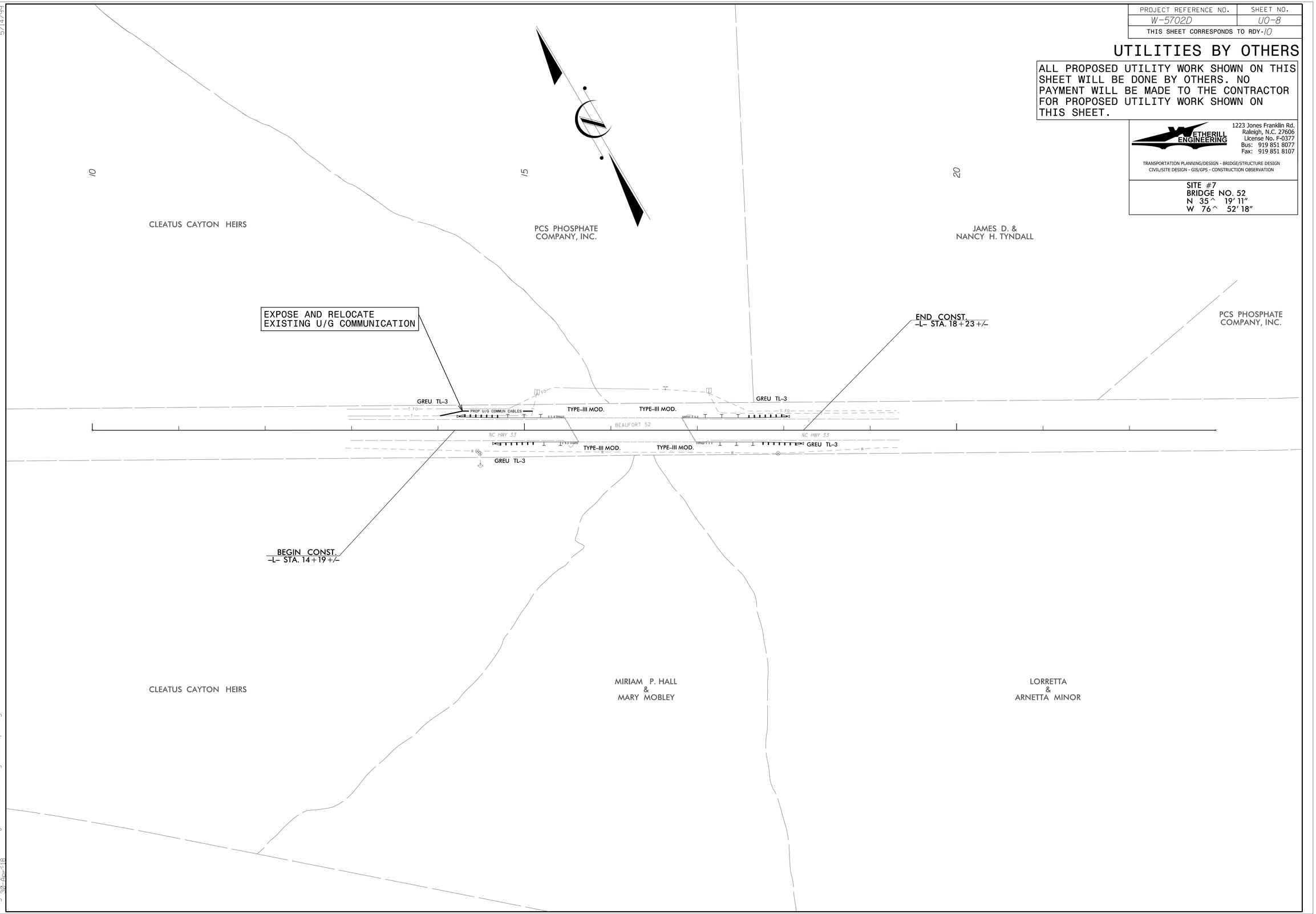

5/14/99

4:36:08 PM
Engineering\U0\Proj\W-5702D_ut_rdy10_U08_psh.dgn
30-Apr-18

PROJECT REFERENCE NO.	SHEET NO.
W-5702D	U0-9
THIS SHEET CORRESPONDS TO RDY-11	

UTILITIES BY OTHERS

ALL PROPOSED UTILITY WORK SHOWN ON THIS SHEET WILL BE DONE BY OTHERS. NO PAYMENT WILL BE MADE TO THE CONTRACTOR FOR PROPOSED UTILITY WORK SHOWN ON THIS SHEET.

ETHERILL ENGINEERING
1223 Jones Franklin Rd.
Raleigh, N.C. 27606
License No. F-0377
Bus: 919 851 8077
Fax: 919 851 8107

TRANSPORTATION PLANNING/DESIGN - BRIDGE/STRUCTURE DESIGN
CIVIL/SITE DESIGN - GIS/GPS - CONSTRUCTION OBSERVATION

SITE #8
CULVERT NO. 49
N 35° 18' 03"
W 76° 49' 40"

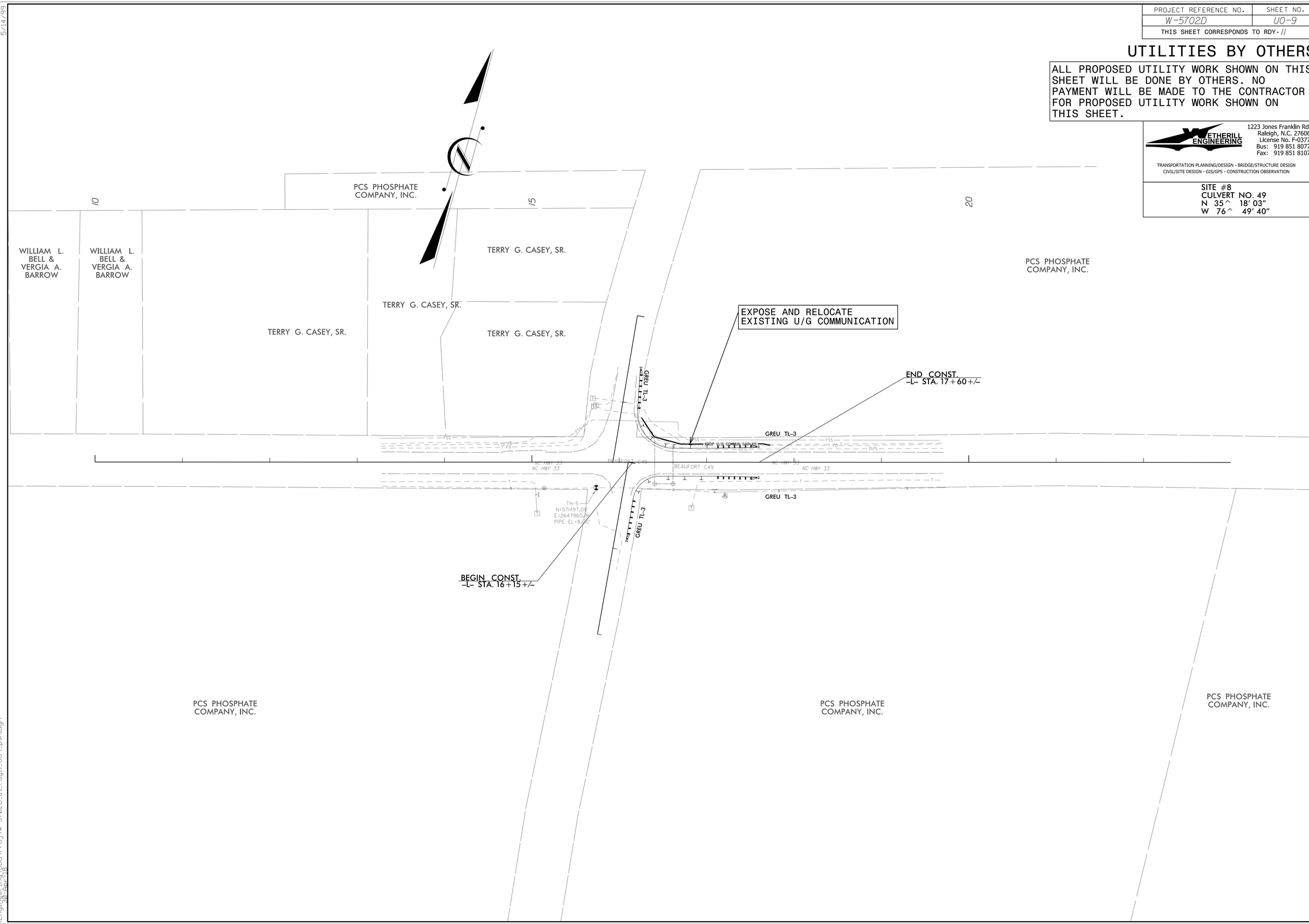

5/14/99

4:34:40 PM
C:\Projects\Engineering\U00\Proj\W-5702D_ut_rdy11_U09_psh.dgn
30-Apr-99

PROJECT REFERENCE NO.	SHEET NO.
W-5702D	U0-10
THIS SHEET CORRESPONDS TO RDY-12	

UTILITIES BY OTHERS

ALL PROPOSED UTILITY WORK SHOWN ON THIS SHEET WILL BE DONE BY OTHERS. NO PAYMENT WILL BE MADE TO THE CONTRACTOR FOR PROPOSED UTILITY WORK SHOWN ON THIS SHEET.

ETHERILL ENGINEERING
1223 Jones Franklin Rd.
Raleigh, N.C. 27606
License No. F-0377
Bus: 919 851 8077
Fax: 919 851 8107

TRANSPORTATION PLANNING/DESIGN - BRIDGE/STRUCTURE DESIGN
CIVIL/SITE DESIGN - GIS/GPS - CONSTRUCTION OBSERVATION

SITE #9
BRIDGE NO. 48
N 35^ 18' 03"
W 76^ 46' 34"

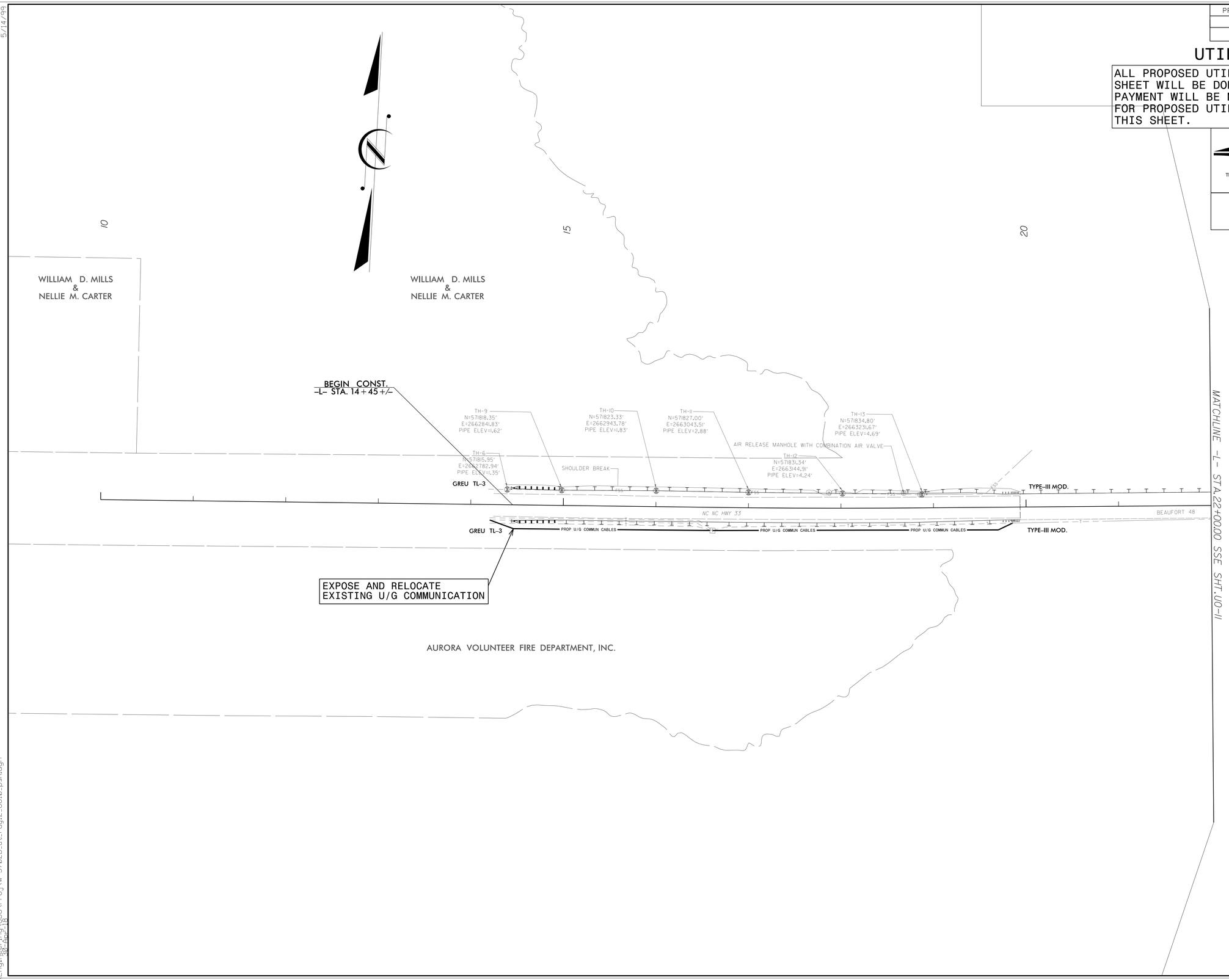

5/14/99

4:33:11 PM
30 Sep 2018
ties\Engineering\80\Proj\W-5702D_ut_rdy12_U010_psh.dgn

PROJECT REFERENCE NO.	SHEET NO.
W-5702D	U0-11
THIS SHEET CORRESPONDS TO RDY-13	

UTILITIES BY OTHERS

ALL PROPOSED UTILITY WORK SHOWN ON THIS SHEET WILL BE DONE BY OTHERS. NO PAYMENT WILL BE MADE TO THE CONTRACTOR FOR PROPOSED UTILITY WORK SHOWN ON THIS SHEET.

WETHERILL ENGINEERING
1223 Jones Franklin Rd.
Raleigh, N.C. 27606
License No. F-0377
Bus: 919 851 8077
Fax: 919 851 8107

TRANSPORTATION PLANNING/DESIGN - BRIDGE/STRUCTURE DESIGN
CIVIL/SITE DESIGN - GIS/GPS - CONSTRUCTION OBSERVATION

SITE #9
BRIDGE NO. 48
N 35° 18′ 03″
W 76° 46′ 34″

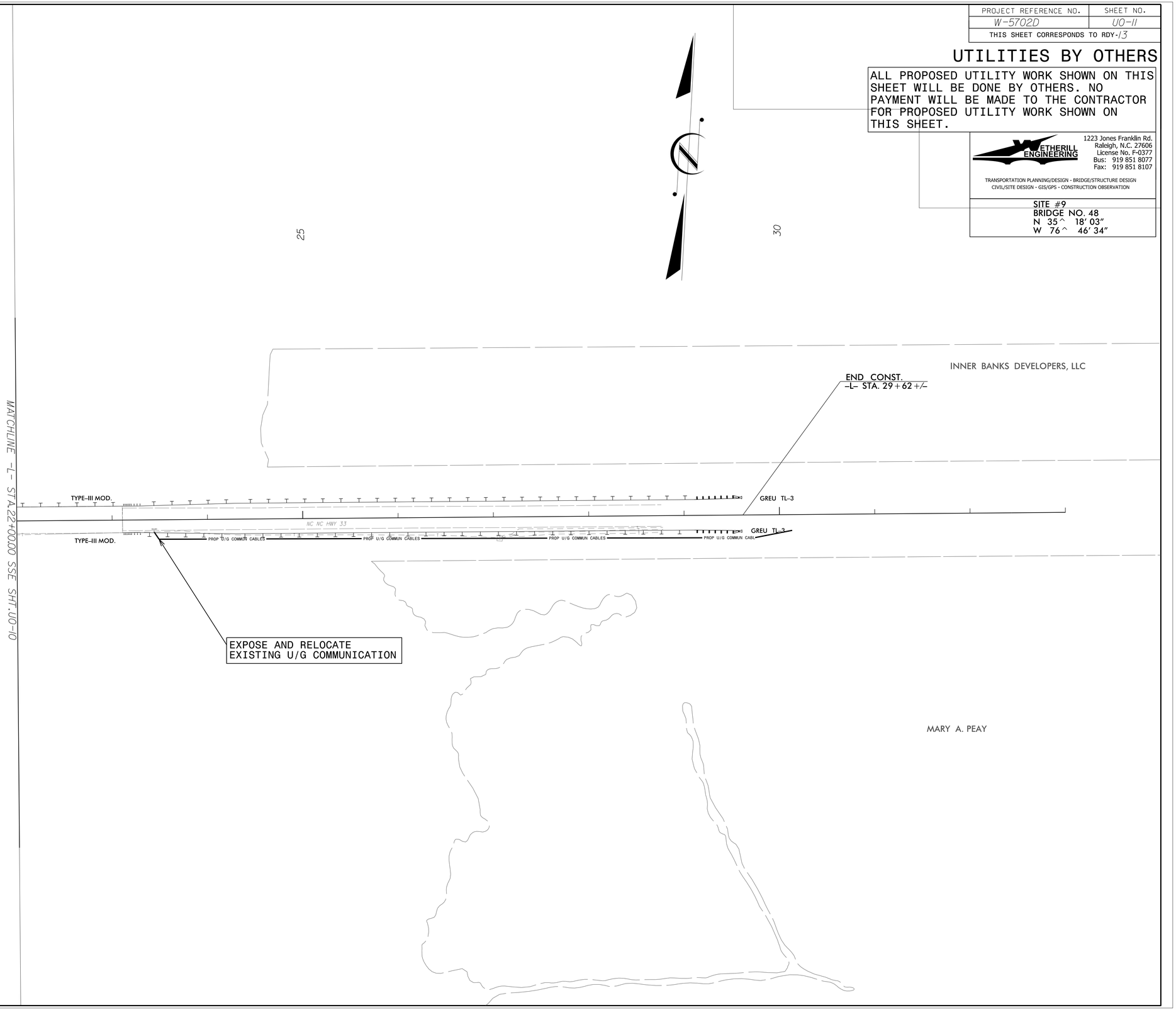

5/14/99

4:31:34 PM
Engineering\U0\Proj\W-5702D_ut_rdy13_U011_psh.dgn
30-Apr-18

PROJECT REFERENCE NO.	SHEET NO.
W-5702D	U0-12
THIS SHEET CORRESPONDS TO RDY-14	

UTILITIES BY OTHERS

ALL PROPOSED UTILITY WORK SHOWN ON THIS SHEET WILL BE DONE BY OTHERS. NO PAYMENT WILL BE MADE TO THE CONTRACTOR FOR PROPOSED UTILITY WORK SHOWN ON THIS SHEET.

WETHERILL ENGINEERING
1223 Jones Franklin Rd.
Raleigh, N.C. 27606
License No. F-0377
Bus: 919 851 8077
Fax: 919 851 8107

TRANSPORTATION PLANNING/DESIGN - BRIDGE/STRUCTURE DESIGN
CIVIL/SITE DESIGN - GIS/GPS - CONSTRUCTION OBSERVATION

SITE #10
BRIDGE NO. 3
N 34° 50' 50"
W 76° 45' 22"

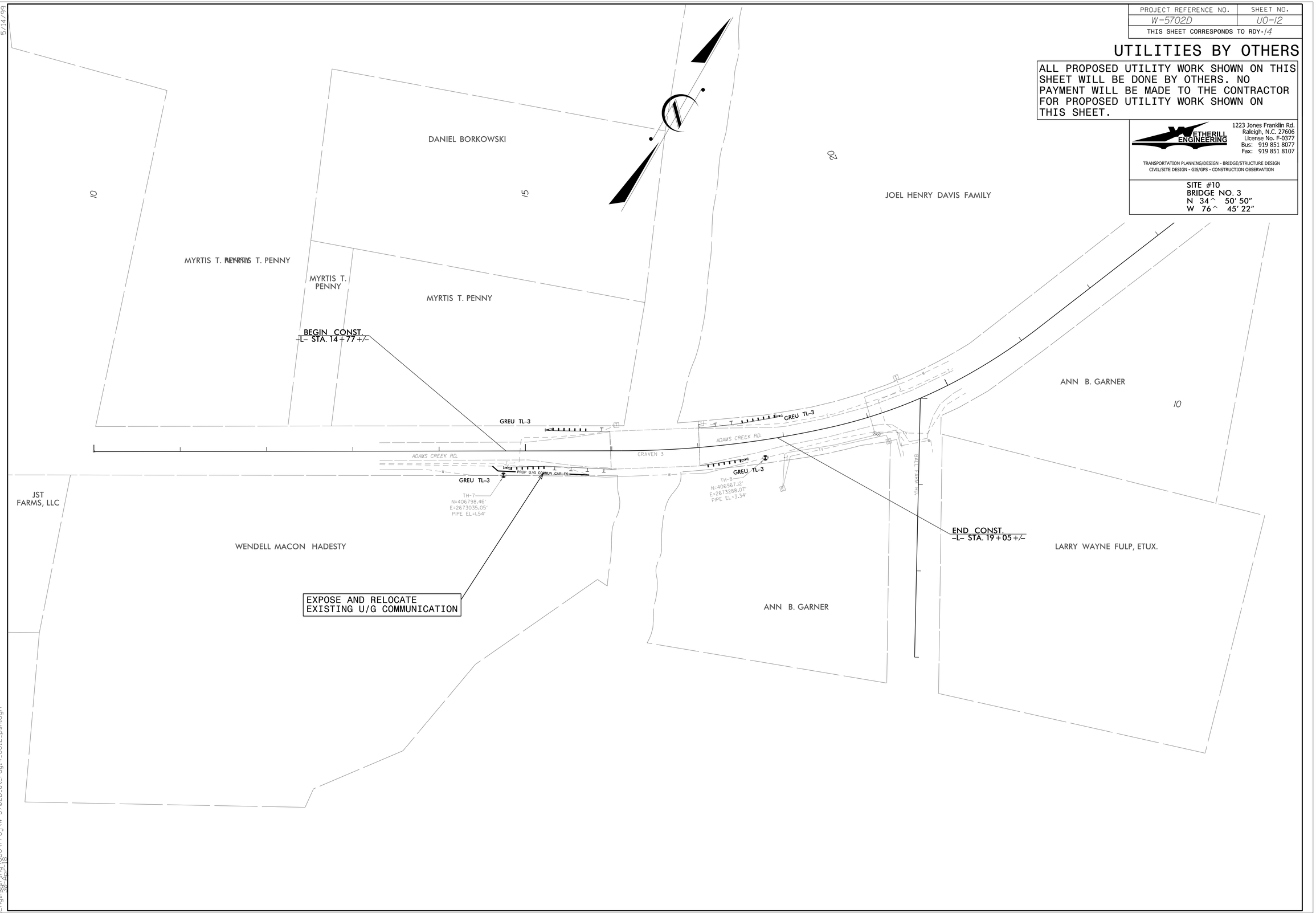

5/14/99

ter\Engineering\W5702D\Proj\W-5702D_ut_rdy14_U012_psh.dgn 4:25:57 PM