This electronic collection of documents is provided for the convenience of the user and is Not a Certified Document –

The documents contained herein were originally issued and sealed by the individuals whose names and license numbers appear on each page, on the dates appearing with their signature on that page.
This file or an individual page shall not be considered a certified document.

09/08/99

TIP PROJECT: 17.BP.2.R.54

CONTRACT: DB00254

See Sheet 1-A For Index of Sheets

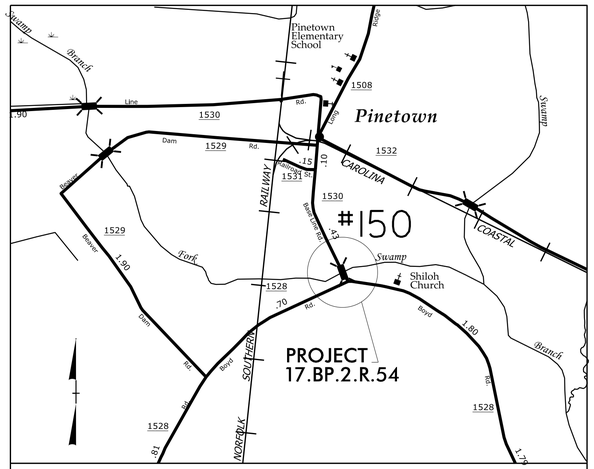

VICINITY MAP
(NOT TO SCALE)

STATE OF NORTH CAROLINA
DIVISION OF HIGHWAYS

BEAUFORT COUNTY

STATE	STATE PROJECT REFERENCE NO.	SHEET NO.	TOTAL SHEETS
N.C.	17.BP.2.R.54	1	

STATE PROJ. NO.	F. A. PROJ. NO.	DESCRIPTION

LOCATION: BRIDGE #150 OVER FORK SWAMP ON SR 1530

TYPE OF WORK: BRIDGE REPLACEMENT, GUARDRAIL, PAVING, GRADING AND DRAINAGE

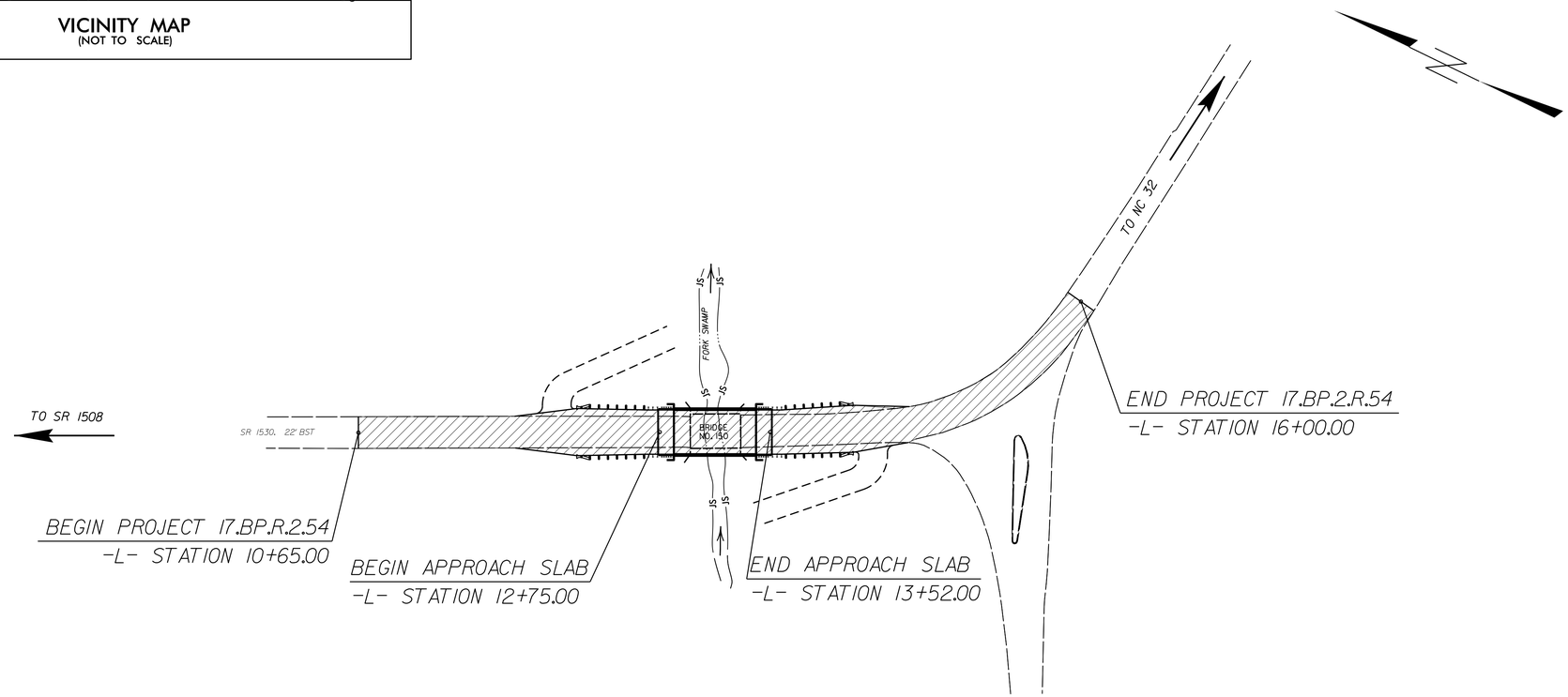

GRAPHIC SCALES

50 25 0 50 100
PLANS

50 25 0 50 100
PROFILE (HORIZONTAL)

10 5 0 10 20
PROFILE (VERTICAL)

PROJECT LENGTH

LENGTH ROADWAY PROJECT 17BP.2.R.54 = 0.086
LENGTH STRUCTURE PROJECT 17BP.2.R.54 = 0.015
TOTAL LENGTH PROJECT 17BP.2.R.54 = 0.101

Prepared in the Office of:

DIVISION OF HIGHWAYS

1704 North Greene Street Greenville, NC 27835

2012 STANDARD SPECIFICATIONS

RIGHT OF WAY DATE:
JUNE 2014

LETTING DATE:
MAY 2016

ED EATMON, PE
PROJECT ENGINEER

LANG JONES
PROJECT DESIGN ENGINEER

HYDRAULICS ENGINEER

NORTH CAROLINA PROFESSIONAL SEAL 11274 ENGINEER BRYCE EDWARD EATMON, III

DocuSigned by: Bryce Eatmon 11/24/2015 P.E.
SIGNATURE:

ROADWAY DESIGN ENGINEER

NORTH CAROLINA PROFESSIONAL SEAL 11274 ENGINEER BRYCE EDWARD EATMON, III

DocuSigned by: Bryce Eatmon 11/24/2015 P.E.
SIGNATURE:

STATE OF NORTH CAROLINA • DEPARTMENT OF TRANSPORTATION •

23-NOV-2015 11:23
G:\PROJECTS\BEAUFORT\beaufort 150\Beaufort150_ddc2_pshl.dgn
$$$$USERNAME$$$$

INDEX OF SHEETS

1	TITLE SHEET
1A	INDEX OF SHEETS, GENERAL NOTES, STANDARD DRAWINGS
1B	CONVENTIONAL SYMBOLS
2	TYPICAL SECTIONS
3	SUMMARY OF QUANTITIES
3A	SUMMARY OF DRAINAGE, GUARDRAIL AND EARTHWORK QUANTITIES
4	PLAN AND PROFILE SHEET
4A	RIGHT OF WAY SHEET
EC1-EC5	EROSION CONTROL SHEETS
UC1-UC4	UTILITY CONSTRUCTION SHEETS
X1A	CROSS-SECTION SUMMARY
X1-X4	CROSS-SECTIONS
S1-S15	STRUCTURE PLANS (BRIDGE)

2012 ROADWAY ENGLISH STANDARD DRAWINGS

The following Roadway Standards as appear in "Roadway Standard Drawings" Highway Design Branch - N. C. Department of Transportation - Raleigh, N. C., Dated January, 2012 are applicable to this projectand by reference hereby are considered a part of these plans:

STD.NO.	TITLE
DIVISION 2 - EARTHWORK	
200.02	Method of Clearing - Method II
225.02	Guide for Grading Subgrade - Secondary and Local
225.04	Method of Obtaining Superelevation - Two Lane Pavement
DIVISION 3 - PIPE CULVERTS	
300.01	Method of Pipe Installation
DIVISION 4 - MAJOR STRUCTURES	
422.10	Reinforced Bridge Approach Fills
DIVISION 5 - SUBGRADE, BASES AND SHOULDERS	
560.01	Method of Shoulder Construction - High Side of Superelevated Curve - Method I
DIVISION 8 - INCIDENTALS	
815.03	Pipe Underdrain and Blind Drain
840.00	Concrete Base Pad for Drainage Structures
840.29	Frames and Narrow Slot Flat Grates
840.35	Traffic Bearing Grated Drop Inlet
840.45	Precast Drainage Structure
840.66	Drainage Structure Steps
862.01	Guardrail Placement
862.02	Guardrail Installation
862.03	Structure Anchor Units
876.02	Guide for Rip Rap at Pipe Outlets

GENERAL NOTES:

2012 SPECIFICATIONS
EFFECTIVE: 01-17-12
REVISED: 07/30/12

GRADE LINE:
GRADING AND SURFACING:

THE GRADE LINES SHOWN DENOTE THE FINISHED ELEVATION OF THE PROPOSED SURFACING AT GRADE POINTS SHOWN ON THE TYPICAL SECTIONS. GRADE LINES MAY BE ADJUSTED AT THEIR BEGINNING AND ENDING AND AT STRUCTURES AS DIRECTED BY THE ENGINEER IN ORDER TO SECURE A PROPER TIE-IN.

CLEARING:

CLEARING ON THIS PROJECT SHALL BE PERFORMED TO THE LIMITS ESTABLISHED BY METHOD II.

SUPERELEVATION:

ALL CURVES ON THIS PROJECT SHALL BE SUPERELEVATED IN ACCORDANCE WITH STD. NO. 225.04 USING THE RATE OF SUPERELEVATION AND RUNOFF SHOWN ON THE PLANS. SUPERELEVATION IS TO BE REVOLVED ABOUT THE GRADE POINTS SHOWN ON THE TYPICAL SECTIONS.

SHOULDER CONSTRUCTION:

ASPHALT, EARTH, AND CONCRETE SHOULDER CONSTRUCTION ON THE HIGH SIDE OF SUPERELEVATED CURVES SHALL BE IN ACCORDANCE WITH STD. NO. 560.01.

UNDERDRAINS:

UNDERDRAINS SHALL BE CONSTRUCTED IN ACCORDANCE WITH STD. NO. 815.03 AT LOCATIONS DIRECTED BY ENGINEER.

GUARDRAIL:

THE GUARDRAIL LOCATIONS SHOWN ON THE PLANS MAY BE ADJUSTED DURING CONSTRUCTION AS DIRECTED BY THE ENGINEER. THE CONTRACTOR SHOULD CONSULT WITH THE ENGINEER PRIOR TO ORDERING GUARDRAIL MATERIAL.

END BENTS:

THE ENGINEER SHALL CHECK THE STRUCTURE END BENT PLANS, DETAILS, AND CROSS-SECTION PRIOR TO SETTING OF THE SLOPE STAKES FOR THE EMBANKMENT OR EXCAVATION APPROACHING A BRIDGE.

UTILITIES:

ANY RELOCATION OF EXISTING UTILITIES WILL BE ACCOMPLISHED BY OTHERS, EXCEPT AS SHOWN ON THE PLANS.

RIGHT-OF-WAY MARKERS:

ALL RIGHT-OF-WAY MARKERS ON THIS PROJECT SHALL BE PLACED BY OTHERS.

28-OCT-2015 11:55
G:\PROJECTS\BEAUFORT\beaufort 150\Beaufort150_ddc2_pshla.dgn

04/06/15

PROJECT REFERENCE NO.	SHEET NO.
17.BP.2.R.54	1b

STATE OF NORTH CAROLINA, DIVISION OF HIGHWAYS

CONVENTIONAL PLAN SHEET SYMBOLS

Note: Not to Scale **S.U.E. = Subsurface Utility Engineering*

BOUNDARIES AND PROPERTY:

- State Line
- County Line
- Township Line
- City Line
- Reservation Line
- Property Line
- Existing Iron Pin — EIP
- Property Corner
- Property Monument — ECM
- Parcel/Sequence Number — 123
- Existing Fence Line
- Proposed Woven Wire Fence
- Proposed Chain Link Fence
- Proposed Barbed Wire Fence
- Existing Wetland Boundary — WLB
- Proposed Wetland Boundary — WLB
- Existing Endangered Animal Boundary — EAB
- Existing Endangered Plant Boundary — EPB
- Existing Historic Property Boundary — HPB
- Known Contamination Area: Soil
- Potential Contamination Area: Soil
- Known Contamination Area: Water
- Potential Contamination Area: Water
- Contaminated Site: Known or Potential

BUILDINGS AND OTHER CULTURE:

- Gas Pump Vent or U/G Tank Cap
- Sign — S
- Well — W
- Small Mine
- Foundation
- Area Outline
- Cemetery
- Building
- School
- Church
- Dam

HYDROLOGY:

- Stream or Body of Water
- Hydro, Pool or Reservoir
- Jurisdictional Stream — JS
- Buffer Zone 1 — BZ 1
- Buffer Zone 2 — BZ 2
- Flow Arrow
- Disappearing Stream
- Spring
- Wetland
- Proposed Lateral, Tail, Head Ditch — FLOW
- False Sump

RAILROADS:

- Standard Gauge — CSX TRANSPORTATION
- RR Signal Milepost — MILEPOST 35
- Switch — SWITCH
- RR Abandoned
- RR Dismantled

RIGHT OF WAY:

- Baseline Control Point
- Existing Right of Way Marker
- Existing Right of Way Line
- Proposed Right of Way Line — RW
- Proposed Right of Way Line with Iron Pin and Cap Marker — RW
- Proposed Right of Way Line with Concrete or Granite R/W Marker — RW
- Proposed Control of Access Line with Concrete C/A Marker — CA
- Existing Control of Access — CA
- Proposed Control of Access — CA
- Existing Easement Line — E
- Proposed Temporary Construction Easement — E
- Proposed Temporary Drainage Easement — TDE
- Proposed Permanent Drainage Easement — PDE
- Proposed Permanent Drainage / Utility Easement — DUE
- Proposed Permanent Utility Easement — PUE
- Proposed Temporary Utility Easement — TUE
- Proposed Aerial Utility Easement — AUE
- Proposed Permanent Easement with Iron Pin and Cap Marker

ROADS AND RELATED FEATURES:

- Existing Edge of Pavement
- Existing Curb
- Proposed Slope Stakes Cut — C
- Proposed Slope Stakes Fill — F
- Proposed Curb Ramp — CR
- Existing Metal Guardrail
- Proposed Guardrail
- Existing Cable Guiderail
- Proposed Cable Guiderail
- Equality Symbol
- Pavement Removal

VEGETATION:

- Single Tree
- Single Shrub
- Hedge
- Woods Line
- Orchard
- Vineyard — Vineyard

EXISTING STRUCTURES:

MAJOR:

- Bridge, Tunnel or Box Culvert — CONC
- Bridge Wing Wall, Head Wall and End Wall — CONC WW

MINOR:

- Head and End Wall — CONC HW
- Pipe Culvert
- Footbridge
- Drainage Box: Catch Basin, DI or JB — CB
- Paved Ditch Gutter
- Storm Sewer Manhole — S
- Storm Sewer — S

UTILITIES:

POWER:

- Existing Power Pole
- Proposed Power Pole
- Existing Joint Use Pole
- Proposed Joint Use Pole
- Power Manhole — P
- Power Line Tower
- Power Transformer
- U/G Power Cable Hand Hole
- H-Frame Pole
- U/G Power Line LOS B (S.U.E.*) — P
- U/G Power Line LOS C (S.U.E.*) — P
- U/G Power Line LOS D (S.U.E.*) — P

TELEPHONE:

- Existing Telephone Pole
- Proposed Telephone Pole
- Telephone Manhole — T
- Telephone Pedestal — T
- Telephone Cell Tower
- U/G Telephone Cable Hand Hole
- U/G Telephone Cable LOS B (S.U.E.*) — T
- U/G Telephone Cable LOS C (S.U.E.*) — T
- U/G Telephone Cable LOS D (S.U.E.*) — T
- U/G Telephone Conduit LOS B (S.U.E.*) — TC
- U/G Telephone Conduit LOS C (S.U.E.*) — TC
- U/G Telephone Conduit LOS D (S.U.E.*) — TC
- U/G Fiber Optics Cable LOS B (S.U.E.*) — T FO
- U/G Fiber Optics Cable LOS C (S.U.E.*) — T FO
- U/G Fiber Optics Cable LOS D (S.U.E.*) — T FO

WATER:

- Water Manhole — W
- Water Meter
- Water Valve
- Water Hydrant
- U/G Water Line LOS B (S.U.E*)
- U/G Water Line LOS C (S.U.E*)
- U/G Water Line LOS D (S.U.E*)
- Above Ground Water Line — A/G Water

TV:

- TV Pedestal — C
- TV Tower
- U/G TV Cable Hand Hole — HH
- U/G TV Cable LOS B (S.U.E.*) — TV
- U/G TV Cable LOS C (S.U.E.*) — TV
- U/G TV Cable LOS D (S.U.E.*) — TV
- U/G Fiber Optic Cable LOS B (S.U.E.*) — TV FO
- U/G Fiber Optic Cable LOS C (S.U.E.*) — TV FO
- U/G Fiber Optic Cable LOS D (S.U.E.*) — TV FO

GAS:

- Gas Valve
- Gas Meter
- U/G Gas Line LOS B (S.U.E.*) — G
- U/G Gas Line LOS C (S.U.E.*) — G
- U/G Gas Line LOS D (S.U.E.*) — G
- Above Ground Gas Line — A/G Gas

SANITARY SEWER:

- Sanitary Sewer Manhole
- Sanitary Sewer Cleanout
- U/G Sanitary Sewer Line — SS
- Above Ground Sanitary Sewer — A/G Sanitary Sewer
- SS Forced Main Line LOS B (S.U.E.*) — FSS
- SS Forced Main Line LOS C (S.U.E.*) — FSS
- SS Forced Main Line LOS D (S.U.E.*) — FSS

MISCELLANEOUS:

- Utility Pole
- Utility Pole with Base
- Utility Located Object
- Utility Traffic Signal Box — S
- Utility Unknown U/G Line LOS B (S.U.E.*) — ?UTL
- U/G Tank; Water, Gas, Oil
- Underground Storage Tank, Approx. Loc. — UST
- A/G Tank; Water, Gas, Oil
- Geoenvironmental Boring
- U/G Test Hole LOS A (S.U.E.*)
- Abandoned According to Utility Records — AATUR
- End of Information — E.O.I.

PROJECT REFERENCE NO.	SHEET NO.
17BP.2.R.54	2
R/W SHEET NO.	
ROADWAY DESIGN ENGINEER	PAVEMENT DESIGN ENGINEER

NORTH CAROLINA PROFESSIONAL SEAL ENGINEER BRIAN EDWARD EATMON 11274 — 11/24/2015

C1	PROP. APPROX. 3" ASPHALT CONCRETE SURFACE COURSE, TYPE S9.5A, AT AN AVERAGE RATE OF 336 LBS. PER SQ.YD. IN EACH OF TWO LAYERS.
D1	PROP. APPROX. 3" ASPHALT CONCRETE INTERMEDIATE COURSE, TYPE I19.0B, AT AN AVERAGE RATE OF 342 LBS. PER SQ. YD.
E1	PROP. APPROX. 4" ASPHALT CONCRETE BASE COURSE, TYPE B25.0B, AT AN AVERAGE RATE OF 456 LBS. PER SQ. YD.
T	EARTH MATERIAL.
U1	CONCRETE CORED SLABS

NOTE: PAVEMENT EDGE SLOPES ARE 1:1 UNLESS SHOWN OTHERWISE.

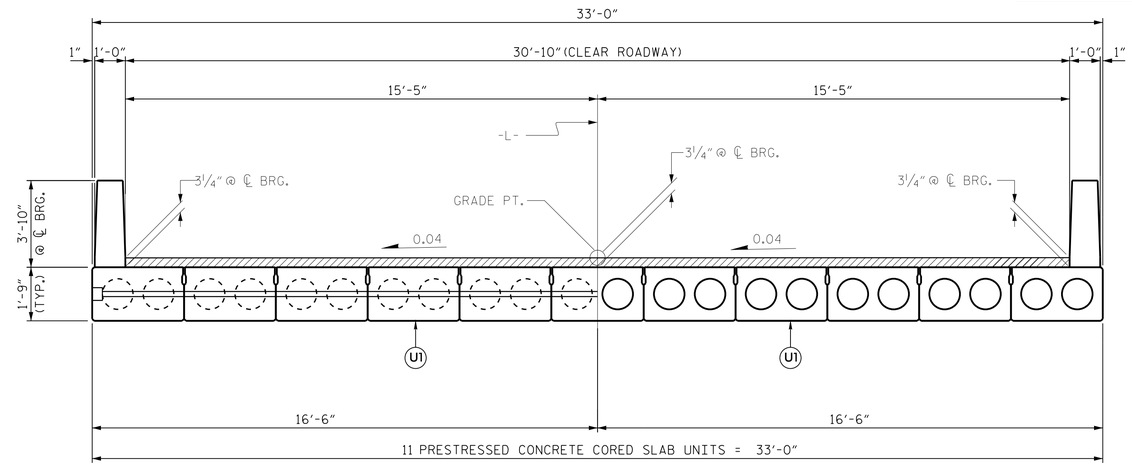

TYPICAL BRIDGE SECTION (NTS)

-L- 12+84.88 - 13+42.13

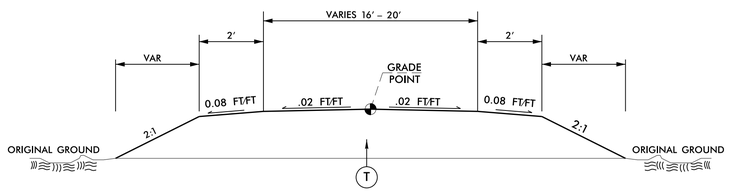

USE TYPICAL SECTION #3

-D1- 10+14.54 - 11+16.12
-D2- 10+14.96 - 11+15.38

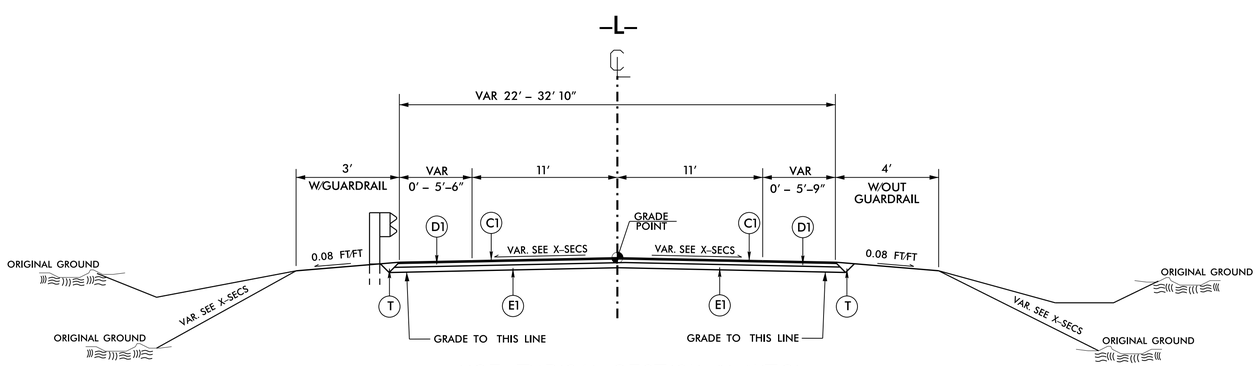

USE TYPICAL SECTION #1 (NTS)

-L- 10+65.00 - 12+73.88
-L- 14+00.11 - 16+00.00

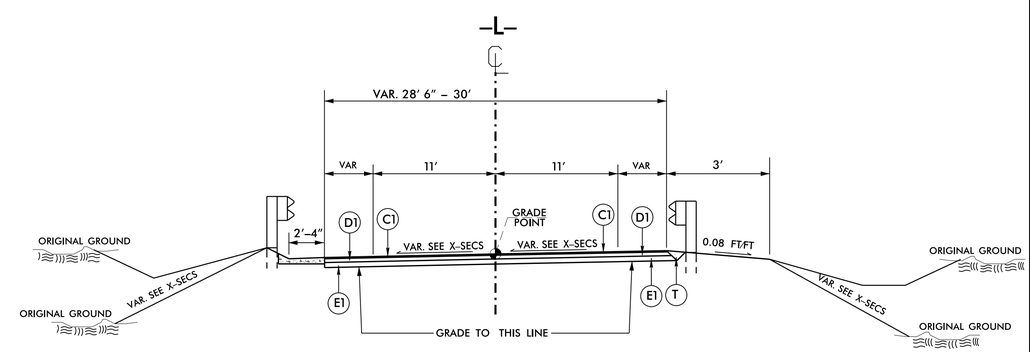

USE TYPICAL SECTION #2 (NTS)

-L- 13+53.25 - 14+00.11

REVISIONS

8/17/99

23-NOV-2015 11:23
r:\roadway\proj\17bp2r54_beaufort\beaufort 150\beaufort150_ddc2_psh2.dgn
$$USERNAME$$

STATE OF NORTH CAROLINA
DIVISION OF HIGHWAYS
SUMMARY OF QUANTITIES

ITEM	SECT	QUANTITY	UNIT	ITEM DESCRIPTION
1	800	1	LS	MOBILIZATION
2	801	1	LS	CONSTRUCTION SURVEYING
3	SP	1	LS	REINFORCED BRIDGE APPROACH FILL
4	226	1	LS	GRADING
5	226	200	CY	UNDERCUT EXCAVATION
6	300	40	TON	FOUNDATION CONDITIONING MATERIAL,MINOR STRUCTURES
7	300	110	SY	FOUNDATION CONDITIONING GEOTEXTILE
8	305	240	LF	18" DRAINAGE PIPE
9	305	44	LF	24" DRAINAGE PIPE
10	310	24	LF	15" R.C.PIPE CULVERTS,CLASS III
11	340	40	LF	PIPE REMOVAL
12	610	380	TON	ASPHALT CONCRETE BASE COURSE,TYPE B25.0B
13	610	285	TON	ASPHALT CONCRETE INTERMEDIATE COURSE,TYPE I19.0B
14	610	280	TON	ASPHALT CONCRETE SURFACE COURSE,TYPE S9.5A
15	620	60	TON	ASPHALT BINDER FOR PLANT MIX,GRADE PG64-22
16	840	1	EA	MASONRY DRAINAGE STRUCTURES
17	840	1	EA	FRAME WITH GRATE,STD 840.29
18	846	50	LF	SHOULDER BERM GUTTER
19	862	4	EA	GUARDRAIL ANCHOR UNITS,TYPE III
20	862	4	EA	GUARDRAIL ANCHOR UNITS,TYPE 350
21	876	1	TON	RIP RAP,CLASS B
22	876	5	SY	GEOTEXTILE FOR DRAINAGE
23	1605	650	LF	TEMPORARY SILT FENCE
24	1610	60	TON	STONE FOR EROSION CONTROL,CLASS B
25	1610	35	TON	SEDIMENT CONTROL STONE
26	1615	0.5	ACRE	TEMPORARY MULCHING
27	1620	50	LB	SEED FOR TEMPORARY SEEDING
28	1620	0.25	TON	FERTILIZER FOR TEMPORARY SEEDING
29	SP	450	LF	SAFETY FENCE
30	1631	500	SY	MATTING FOR EROSION CONTROL
31	1632	25	LF	1/4" HARDWARE CLOTH
32	SP	100	LF	WATTLE
33	SP	10	LB	POLYACRYLAMIDE (PAM)
34	1660	0.5	ACRE	SEEDING AND MULCHING
35	1661	50	LB	SEED FOR REPAIR SEEDING
36	1661	0.25	TON	FERTILIZER FOR REPAIR SEEDING
37	1662	50	LB	SEED FOR SUPPLEMENTAL SEEDING
38	1665	0.5	TON	FERTILIZER TOPDRESSING
39	SP	13	EA	RESPONSE FOR EROSION CONTROL
40	SP	1	LS	RELOCATE EXISTING 6" WATER MAIN
41	402	1	LS	REMOVAL OF EXISTING STRUCTURE AT -L- STA 12+33.00
42	412	1	LS	UNCLASSIFIED STRUCTURE EXCAVATION
43	SP	2	EA	PDA TESTING
44	420	52.6	CY	CLASS A CONCRETE (BRIDGE)
45	422	1	LS	BRIDGE APPROACH SLABS
46	425	5954	LB	REINFORCING STEEL (BRIDGE)
47	450	700	LF	16" PRESTRESSED CONCRETE PILES
48	450	14	EA	PILE REDRIVES
49	SP	110.25	LF	VERTICAL CONCRETE BARRIER RAIL
50	876	58	TON	RIP RAP,CLASS II (3'-0" THICK)
51	876	287	SY	GEOTEXTILE FOR DRAINAGE
52	430	1	LS	ELASTOMETRIC BEARINGS
53	430	605	LF	3'-0" X 1'-9" PRESTRESSED CONCRETE CORED SLABS

REVISIONS

8/17/99

24-NOV-2015 07:38
S:\PROJECT\TIPS\BEAUFORT\beaufort 150\Beaufort150.dac2.psh3.dgn
$$$$USERNAME$$$$

COMPUTED BY: JW	DATE: 7-15-15
CHECKED BY: LJ	DATE: 7-15-15

STATE OF NORTH CAROLINA
DIVISION OF HIGHWAYS

PROJECT REFERENCE NO.	SHEET NO.
17.BP.2.R.54	3A

NOTE: Invert Elevations are for Bid Purposes only and shall not be used for project construction stakeout.
See "Standard Specifications For Roads and Structures, Section 300-5".

LIST OF PIPES, ENDWALLS, ETC. (FOR PIPES 48" & UNDER)

STATION	LOCATION (LT, RT, OR CL)	STRUCTURE NO. FROM	STRUCTURE NO. TO	TOP ELEVATION	INVERT ELEVATION	INVERT ELEVATION	SLOPE CRITICAL	DRAINAGE PIPE (RCP, CSP, CAAP, HDPE, or PVC) 12"	15"	18"	24"	30"	36"	42"	48"	DO NOT USE RCP	DO NOT USE CSP	DO NOT USE CAAP	DO NOT USE HDPE/PVC
-L- 12+42.16	LT	1			25.10	19.59				120									
-L- 12+97.77	RT	2			21.25	21.00					24								
-L- 13+33.34	LT	3			20.67	21.55					20								
-L- 13+80.33	RT	4			20.52	22.90				120									
-L- 13+93.17	LT	5		27.81	23.31														
-L- 13+93.03	LT	5	OUT		23.31	22.07													
TOTALS										240	44								

STATION	CORRUGATED ALUMINUM PIPE 12" (.064)	15" (.064)	18" (.064)	24" (.064)	30" (.079)	36" (.109)	42" (.109)	48"	R.C. PIPE (CLASS III) 15"	18"	24"	30"	36"	42"	48"	R.C. PIPE (CLASS IV) 12"	15"	18"	24"	30"	36"	42"	48"
-L- 12+42.16																							
-L- 12+97.77																							
-L- 13+33.34																							
-L- 13+80.33																							
-L- 13+93.17																							
-L- 13+93.03									24														
TOTALS									24														

STATION	*** R. C. PIPE (CLASS V)	*** R. C. PIPE CULVERTS, CONTRACTOR DESIGN PIPE	*** R. C. PIPE CULVERTS, CONTRACTOR DESIGN PIPE	15" SIDE DRAIN PIPE	18" SIDE DRAIN PIPE	ENDWALLS STD. 838.01, STD. 838.11 OR STD. 838.80 (UNLESS NOTED OTHERWISE) CU. YDS. R.C.P.	C.S.P.	QUANTITIES FOR DRAINAGE STRUCTURES PER EACH (0' THRU 5.0')	* TOTAL L.F. FOR PAY QUANTITY SHALL BE COL. 'A' + (1.3 X COL. 'B') LIN. *FT. A 5.0' THRU 10.0'	B 10.0' AND ABOVE	C.B. STD. 840.01 OR STD. 840.02	FRAME, GRATES AND HOOD STANDARD 840.03 TYPE OF GRATE E	F	G	CONCRETE TRANSITIONAL SECTION CATCH BASIN	DROP INLET	T.B.D.I. (N.S.) FRAME WITH TWO GRATES STD. 840.29	G.D.I. FRAME WITH GRATE STD. 840.22	G.D.I. FRAME WITH TWO GRATES STD. 840.22	G.D.I. (N.S.) FRAME WITH GRATE STD. 840.29	G.D.I. (N.S.) FRAME WITH TWO GRATES STD. 840.24	T.B.D.I. STD. 840.35	CORR. STEEL ELBOWS NO. & SIZE	CONC. COLLARS CL. "B" C.Y. STD 840.72	CONC. & BRICK PIPE PLUG, C.Y. STD. 840.71	PIPE REMOVAL LIN.FT.	REMARKS
-L- 12+42.16																											
-L- 12+97.77																											
-L- 13+33.34																											
-L- 13+80.33																											
-L- 13+93.17								1									1					1					
-L- 13+93.03																											
TOTALS																											

ABBREVIATIONS

C.B.	CATCH BASIN
N.D.I.	NARROW DROP INLET
D.I.	DROP INLET
G.D.I.	GRATED DROP INLET
G.D.I. (N.S.)	GRATED DROP INLET (NARROW SLOT)
J.B.	JUNCTION BOX
M.H.	MANHOLE
T.B.D.I.	TRAFFIC BEARING DROP INLET
T.B.J.B.	TRAFFIC BEARING JUNCTION BOX

"N" = DISTANCE FROM EDGE OF LANE TO FACE OF GUARDRAIL.
TOTAL SHOULDER WIDTH = DISTANCE FROM EDGE OF TRAVEL LANE TO SHOULDER BREAK POINT.
FLARE LENGTH = DISTANCE FROM LAST SECTION OF PARALLEL GUARDRAIL TO END OF GUARDRAIL.
W = TOTAL WIDTH OF FLARE FROM BEGINNING OF TAPER TO END OF GUARDRAIL.
G = GATING IMPACT ATTENUATOR TYPE 350
NG = NON-GATING IMPACT ATTENUATOR TYPE 350

GUARDRAIL SUMMARY

SURVEY LINE	BEG. STA.	END STA.	LOCATION	LENGTH (WITH ANCHOR DEDUCTIONS) STRAIGHT	SHOP CURVED	DOUBLE FACED	WARRANT POINT APPROACH END	TRAILING END	"N" DIST. FROM E.O.L.	TOTAL SHOULDER WIDTH	FLARE LENGTH APPROACH END	TRAILING END	W APPROACH END	TRAILING END	ANCHORS TYPE 350	TYPE III	CAT-1						IMPACT ATTENUATOR TYPE 350 NO.	PERMITTED G	NG	SINGLE FACED GUARDRAIL	REMOVE AND RESET EXISTING GUARDRAIL	REMOVE AND STOCKPILE EXISTING GUARDRAIL	REMARKS
-L-	12+17.13	12+85.88	LT	0	0			12+85.88	2.4	5.33		50		1.0	1	1													
-L-	12+17.13	12+85.88	RT	0	0		12+85.88		2.4	5.33	50		1.0		1	1													
-L-	13+41.13	14+11.11	LT	0	0		13+41.13		2.4	5.33	50		1.0		1	1													
-L-	13+41.13	14+08.69	RT	0	0			13+41.13	2.4	5.33		50		1.0	1	1													
TOTAL				0	0										4	4													

SUMMARY OF EARTHWORK
IN CUBIC YARDS

LOCATION	UNCLASSIFIED EXCAVATION	UNDERCUT	EMBT+%	BORROW	WASTE
-L- 10+65.00 - 16+00.00	753	0	983	230	43
-D1- 10+00.00 - 11+12.00	0		151	151	0
-D2- 10+00.00 - 11+15.00	3		266	263	
UNDERCUT (CONTINGENCY)		200	240	240	200
UNCLASSIFIED STRUCTURE EXCAVATION	200	0	0	0	200
SUB TOTAL	401	200	458	240	383
SAY	410	200	460	240	390

PAVEMENT REMOVAL SUMMARY
IN SQUARE YARDS

LINE	STATION - STATION	LOCATION	REMOVAL (SY)
-L-	10+65.00 - 12+96.23	CL	565
-L-	13+31.56 - 16+00.00	CL	677
TOTAL			1242
		SAY	1275

NOTE:

APPROXIMATE QUANTITIES ONLY, UNCLASSIFIED EXCAVATION, STRUCTURE EXCAVATION, BORROW EXCAVATION, FINE GRADING, CLEARING AND GRUBBING, BREAKING OF EXISTING PAVEMENT AND REMOVAL OF EXISTING PAVEMENT WILL BE PAID FOR AT THE CONTRACT LUMP SUM PRICE FOR "GRADING."

PROJECT REFERENCE NO.	SHEET NO.
17BP.2.R.54	4
R/W SHEET NO.	
ROADWAY DESIGN ENGINEER	HYDRAULICS ENGINEER

NORTH CAROLINA PROFESSIONAL SEAL ENGINEER EDWARD EATMON 11274 — 11/24/2015

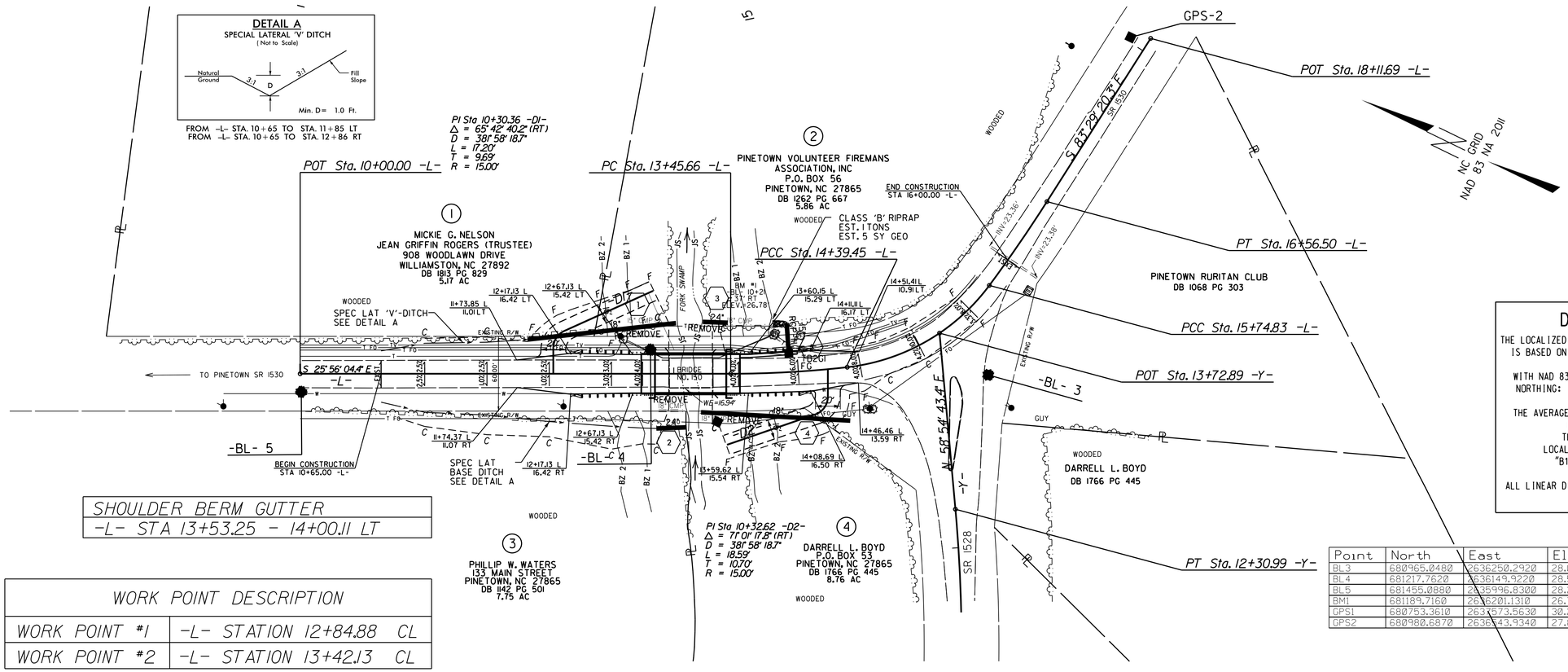

50 25 0 50 100
PLANS

DATUM DESCRIPTION

THE LOCALIZED COORDINATE SYSTEM DEVELOPED FOR THIS PROJECT IS BASED ON THE STATE PLANE COORDINATES ESTABLISHED BY NCDOT FOR MONUMENT "B150 GPS-2" WITH NAD 83/NSRS 2007 STATE PLANE GRID COORDINATES OF NORTHING: 680980.687(ft) EASTING: 2636543.934(ft) ELEVATION: 27.86(ft)
THE AVERAGE COMBINED GRID FACTOR USED ON THIS PROJECT (GROUND TO GRID) IS: 0.99989567
THE N.C. LAMBERT GRID BEARING AND LOCALIZED HORIZONTAL GROUND DISTANCE FROM "B150 GPS-2" TO -L- STATION 10+00 IS N 47° 58' 25.25" W 719.37'
ALL LINEAR DIMENSIONS ARE LOCALIZED HORIZONTAL DISTANCES
VERTICAL DATUM USED IS NAVD 88

Point	North	East	Elevation	Description
BL3	680965.0480	2636250.2920	28.0600	B150 BL-3
BL4	681217.7620	2636149.9220	28.5000	B150 BL-4
BL5	681455.0880	2635996.8300	28.2400	B150 BL-5
BM1	681189.7160	2636201.1310	26.7500	R/R SPIKE SET IN 16" PINE
GPS1	680753.3610	2637573.5630	30.2400	B150 GPS-1
GPS2	680980.6870	2636543.9340	27.8600	B150 GPS-2

SHOULDER BERM GUTTER
-L- STA 13+53.25 - 14+00.11 LT

WORK POINT DESCRIPTION	
WORK POINT #1	-L- STATION 12+84.88 CL
WORK POINT #2	-L- STATION 13+42.13 CL

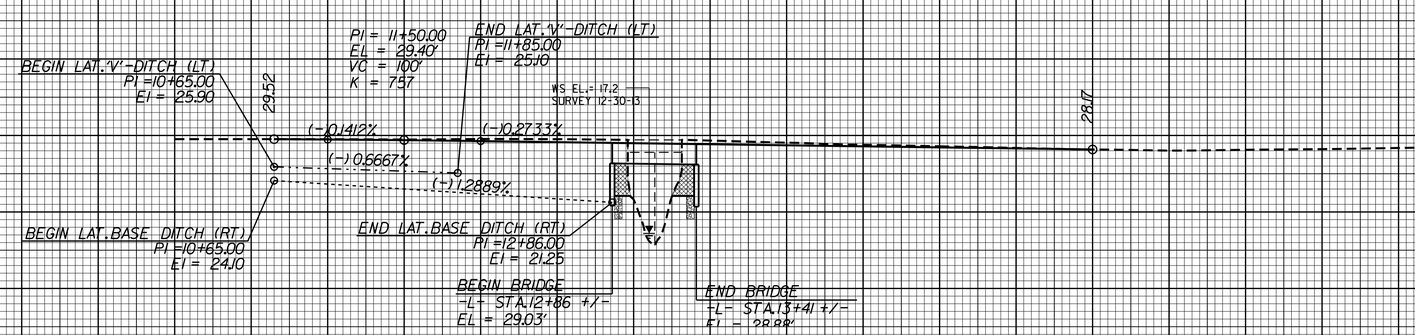

BRIDGE HYDRAULIC DATA

DESIGN DISCHARGE	= 600	CFS
DESIGN FREQUENCY	= 25	YRS
DESIGN HW ELEVATION	= 26.4	FT
BASE DISCHARGE	= 900	CFS
BASE FREQUENCY	= 100	YRS
BASE HW ELEVATION	= 27.3	FT
OVERTOPPING DISCHARGE	= -	CFS
OVERTOPPING FREQUENCY	= -	YRS
OVERTOPPING ELEVATION	= 28.7	FT
DATE OF SURVEY	= 12-30-13	
W.S.ELEVATION AT DATE OF SURVEY	= 17.2	FT

REVISIONS

8/17/99

23-NOV-2015 11:18
C:\PROJECTS\BEAUFORT\beaufort 150\Beaufort150_ddc2_psh4.dgn
$$$$USERNAME$$$$

PROJECT REFERENCE NO.	SHEET NO.
17BP.2.R.54	4A
R/W SHEET NO.	
ROADWAY DESIGN ENGINEER	HYDRAULICS ENGINEER

11/24/2015 11/24/2015

RIGHT OF WAY AREA SUMMARY

PARCEL NO.	PROPERTY OWNER NAME	LOCATION	TOTAL PARCEL AREA [ACRES]	AREA TO BE DEDICATED (CONST. EASEMENT) [ACRES]	AREA TO BE PURCHASED (P.D.E.) [ACRES]	PARCEL AREA REMAINING [ACRES]
1	MICKIE G. NELSON	LT	5.17		0.029	5.14
2	PINETOWN VOLUNTEER FIREMANS	LT	5.86	0.061	0.051	5.75
3	PHILLIP W. WATERS	RT	7.75	0.146		7.60
4	DARRELL L. BOYD	RT	8.76		0.051	8.71

NC GRID NAD 83 NA 2011

40 20 0 40 80

PLANS

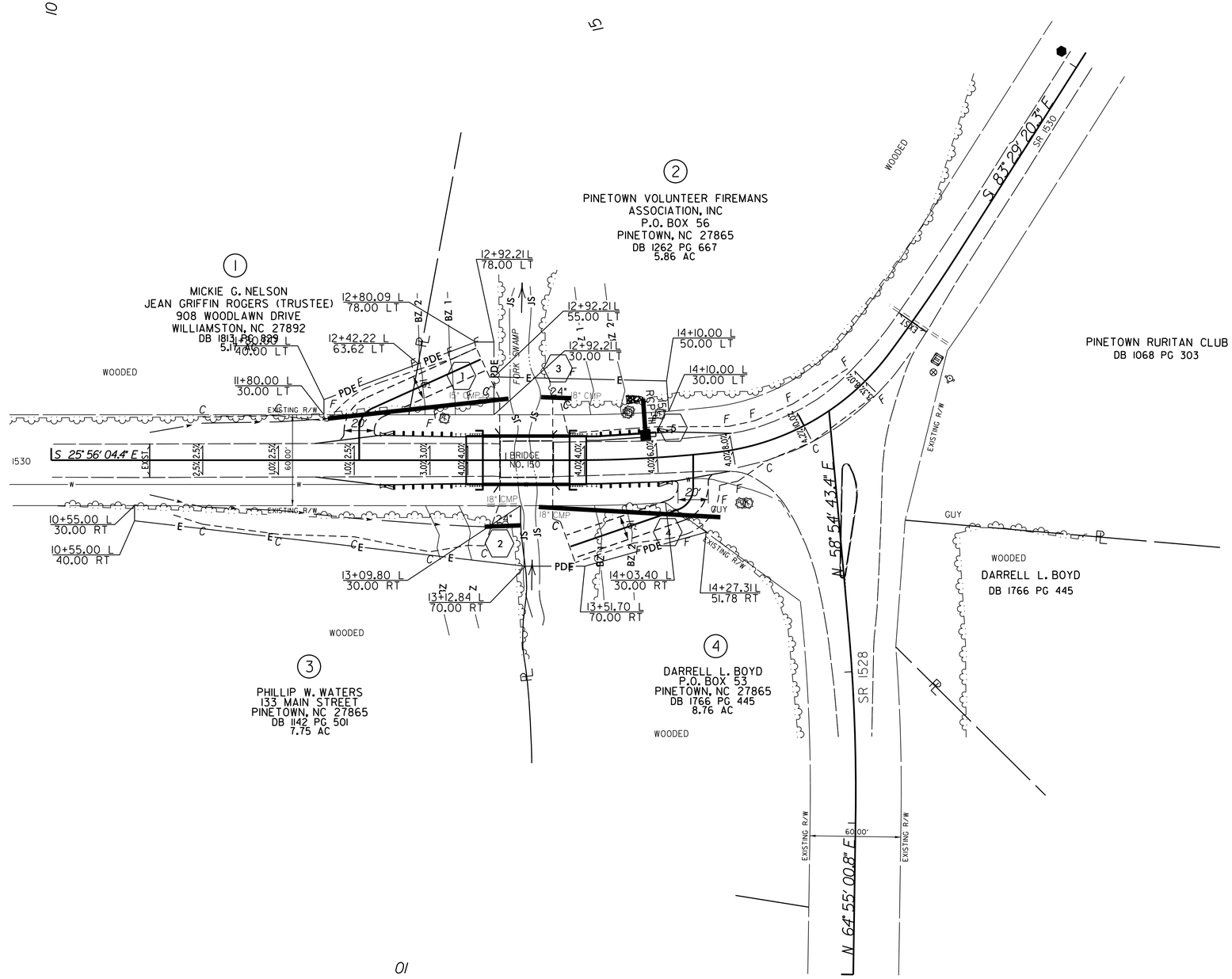

REVISIONS

8/17/99

23-OCT-2015 10:20
C:\PROJECTS\BEAUFORT\beaufort 150\Beaufort150.ddc2.psh4a.dgn
$$USERNAME$$

TIP PROJECT: 17.BP.2.R.54

STATE	STATE PROJECT REFERENCE NO.	SHEET NO.	TOTAL SHEETS
N.C.	17.BP.2.R.54	EC-1	5

STATE PROJ. NO.	F.A. PROJ. NO.	DESCRIPTION

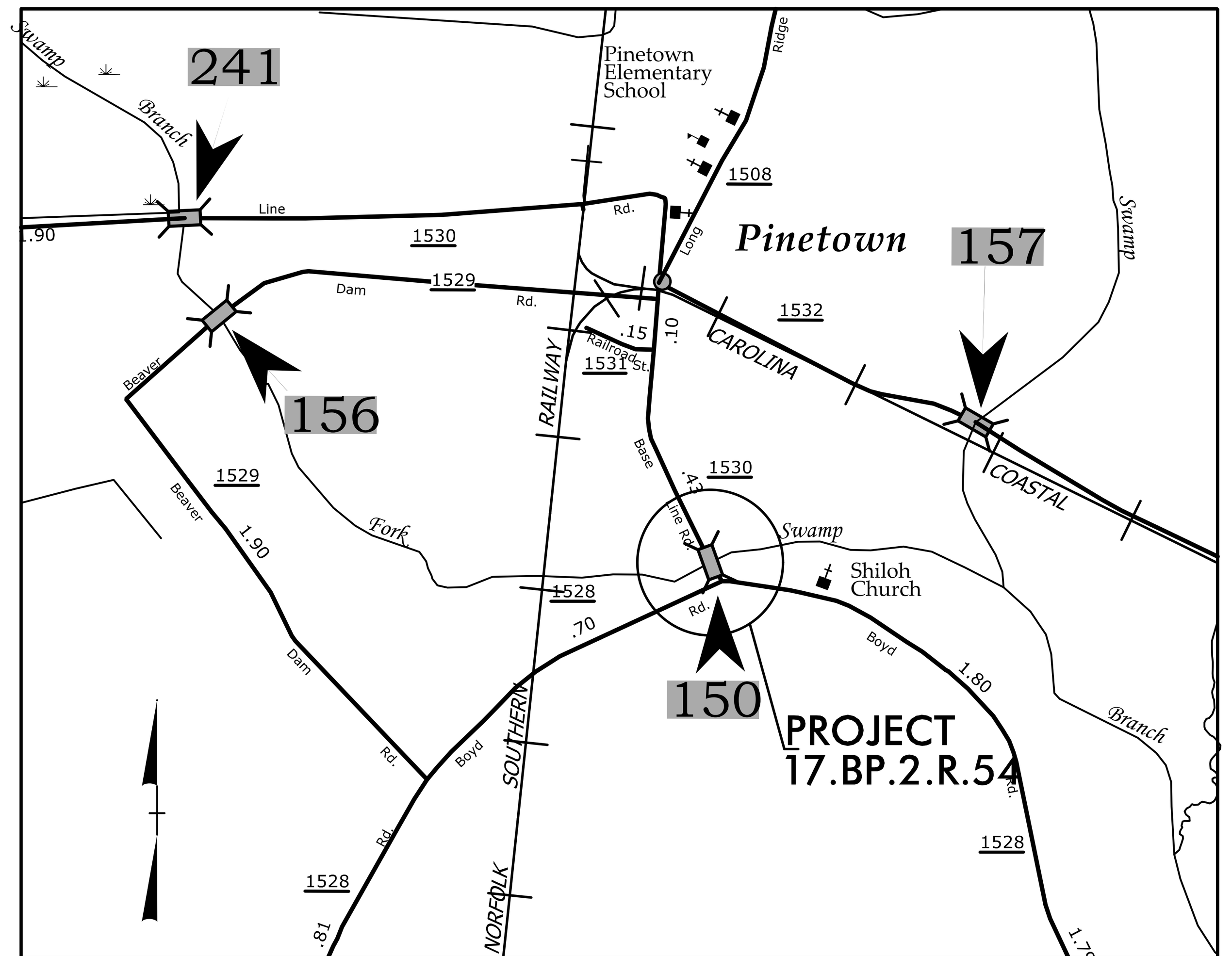

VICINITY MAP
(NOT TO SCALE)

STATE OF NORTH CAROLINA
DIVISION OF HIGHWAYS

PLAN FOR PROPOSED
HIGHWAY EROSION CONTROL

LOCATION: BEAUFORT COUNTY BRIDGE #150 OVER FORK SWAMP ON SR 1530

TYPE OF WORK: BRIDGE REPLACEMENT, GUARDRAIL, PAVING, GRADING AND DRAINAGE.

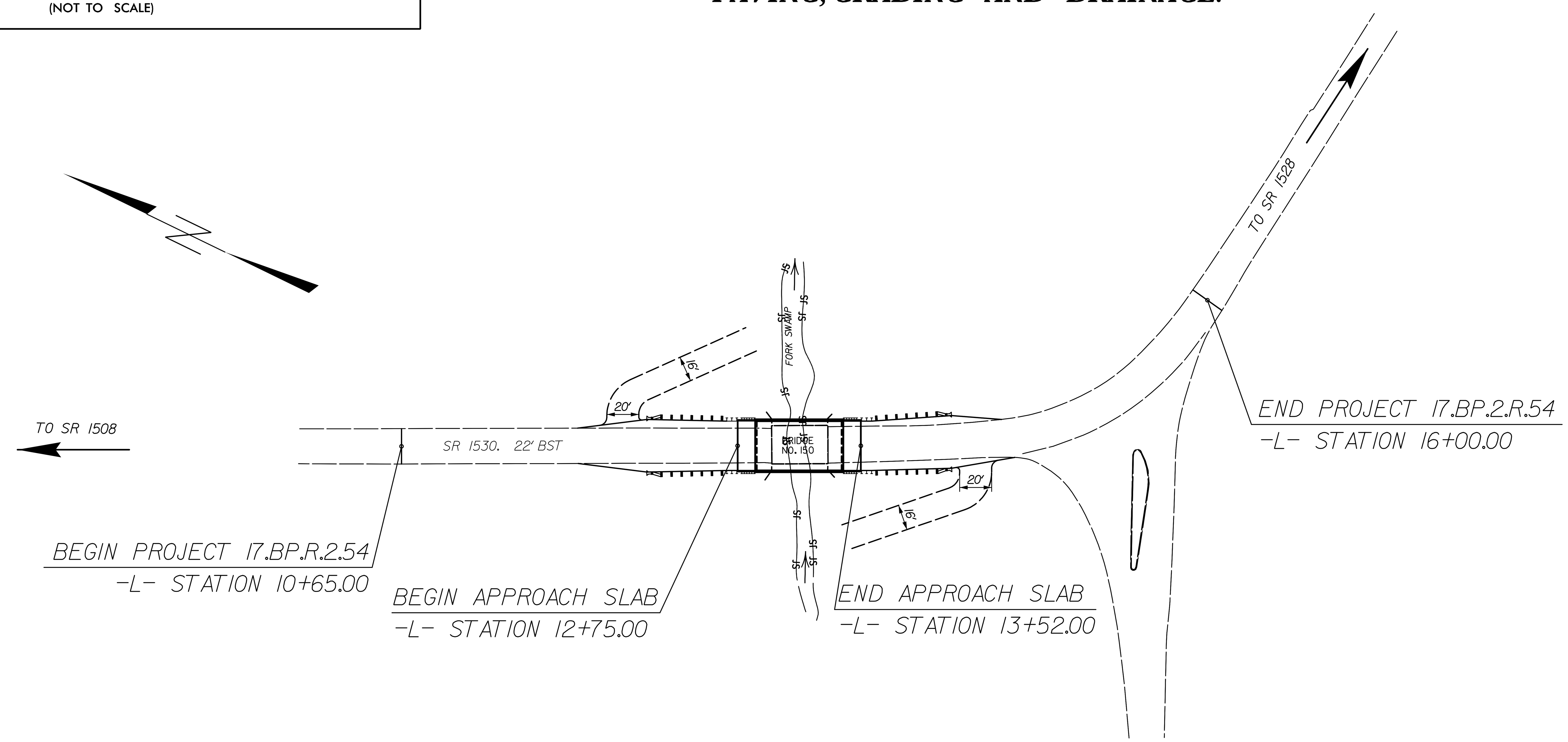

EROSION AND SEDIMENT CONTROL MEASURES

Std. #	Description	Symbol
1630.03	Temporary Silt Ditch	TSD
1630.05	Temporary Diversion	TD
1605.01	Temporary Silt Fence	
1606.01	Special Sediment Control Fence	
1622.01	Temporary Berms and Slope Drains	
	Silt Basin Type B	
1633.01	Temporary Rock Silt Check Type-A	
	Temporary Rock Silt Check Type-A with Matting and Polyacrylamide (PAM)	
	Temporary Rock Silt Check Type-B	
	Wattle / Coir Fiber Wattle	
	Wattle / Coir Fiber Wattle with Polyacrylamide (PAM)	
1634.01	Temporary Rock Sediment Dam Type-A	
1634.02	Temporary Rock Sediment Dam Type-B	
1635.01	Rock Pipe Inlet Sediment Trap Type-A	
1635.02	Rock Pipe Inlet Sediment Trap Type-B	
1630.04	Stilling Basin	
1630.06	Special Stilling Basin	
	Rock Inlet Sediment Trap:	
1632.01	Type A	A
1632.02	Type B	B
1632.03	Type C	C
	Skimmer Basin	
	Tiered Skimmer Basin	
	Infiltration Basin	

THIS PROJECT HAS BEEN DESIGNED TO SENSITIVE WATERSHED STANDARDS.

ENVIRONMENTALLY SENSITIVE AREA(S) EXIST ON THIS PROJECT

Refer To E. C. Special Provisions for Special Considerations.

GRAPHIC SCALES

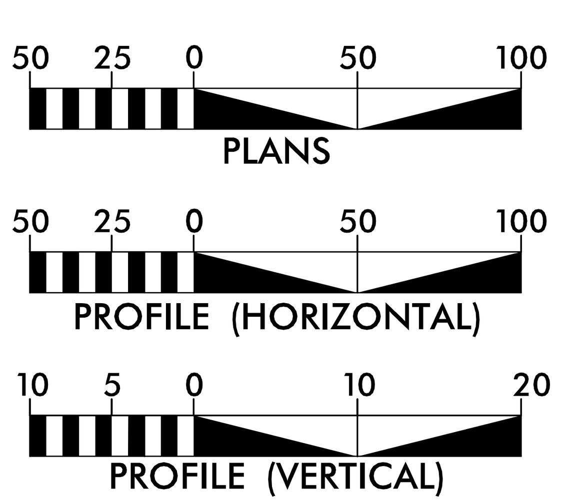

ROADSIDE ENVIRONMENTAL UNIT
DIVISION OF HIGHWAYS
STATE OF NORTH CAROLINA

THESE EROSION AND SEDIMENT CONTROL PLANS COMPLY WITH THE REGULATIONS SET FORTH BY THE NCG-010000 GENERAL CONSTRUCTION PERMIT EFFECTIVE AUGUST 3, 2011 ISSUED BY THE NORTH CAROLINA DEPARTMENT OF ENVIRONMENT AND NATURAL RESOURCES DIVISION OF WATER QUALITY.

Prepared In the Office of:

HNTB
HNTB NORTH CAROLINA, P.C.
343 E. Six Forks Road, Suite 200
Raleigh, North Carolina 27609
NC License No: C-1554

2012 STANDARD SPECIFICATIONS

BEN HENEGAR, E.I
EROSION CONTROL
LEVEL III
CERTIFICATION #3564

Roadway Standard Drawings

The following roadway english standards as appear in "Roadway Standard Drawings"– Roadway Design Unit – N. C. Department of Transportation – Raleigh, N. C., dated January 2012 and the latest revison thereto are applicable to this project and by reference hereby are considered a part of these plans.

1604.01 Railroad Erosion Control Detail
1605.01 Temporary Silt Fence
1606.01 Special Sediment Control Fence
1607.01 Gravel Construction Entrance
1622.01 Temporary Berms and Slope Drains
1630.01 Riser Basin
1630.02 Silt Basin Type B
1630.03 Temporary Silt Ditch
1630.04 Stilling Basin
1630.05 Temporary Diversion
1630.06 Special Stilling Basin
1631.01 Matting Installation
1632.01 Rock Inlet Sediment Trap Type A
1632.02 Rock Inlet Sediment Trap Type B
1632.03 Rock Inlet Sediment Trap Type C
1633.01 Temporary Rock Silt Check Type A
1633.02 Temporary Rock Silt Check Type B
1634.01 Temporary Rock Sediment Dam Type A
1634.02 Temporary Rock Sediment Dam Type B
1635.01 Rock Pipe Inlet Sediment Trap Type A
1635.02 Rock Pipe Inlet Sediment Trap Type B
1640.01 Coir Fiber Baffle
1645.01 Temporary Stream Crossing

PROJECT REFERENCE NO.	SHEET NO.
17.BP.2.R.54	EC-2
R/W SHEET NO.	

SILT FENCE COIR FIBER WATTLE BREAK DETAIL

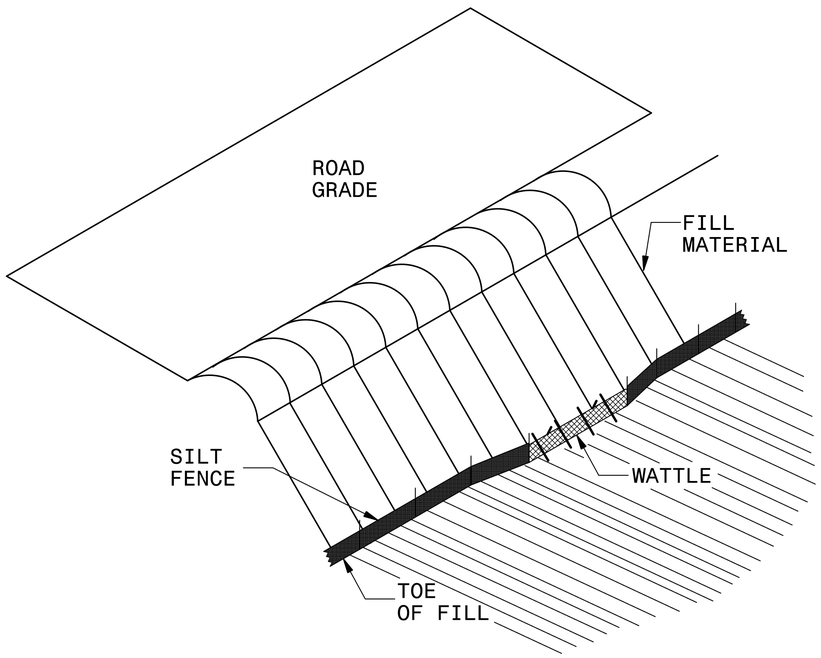

ISOMETRIC VIEW

NOTES:

USE MINIMUM 12 IN. DIAMETER COIR FIBER (COCONUT FIBER) WATTLE AND LENGTH OF 10 FT.

EXCAVATE A 1 TO 2 INCH TRENCH FOR WATTLE TO BE PLACED.

DO NOT PLACE WATTLE ON TOE OF SLOPE.

USE 2 FT. WOODEN STAKES WITH A 2 IN. BY 2 IN. NOMINAL CROSS SECTION.

INSTALL A MINIMUM OF 2 UPSLOPE STAKES AND 4 DOWNSLOPE STAKES AT AN ANGLE TO WEDGE WATTLE TO GROUND.

PROVIDE STAPLES MADE OF 0.125 IN. DIAMETER STEEL WIRE FORMED INTO A U SHAPE NOT LESS THAN 12″ IN LENGTH.

INSTALL STAPLES APPROXIMATELY EVERY 1 LINEAR FOOT ON BOTH SIDES OF WATTLE AND AT EACH END TO SECURE IT TO THE SOIL.

WATTLE INSTALLATION CAN BE ON OUTSIDE OF THE SILT FENCE AS DIRECTED.

INSTALL TEMPORARY SILT FENCE IN ACCORDANCE WITH SECTION 1605 OF THE STANDARD SPECIFICATIONS.

INSET A

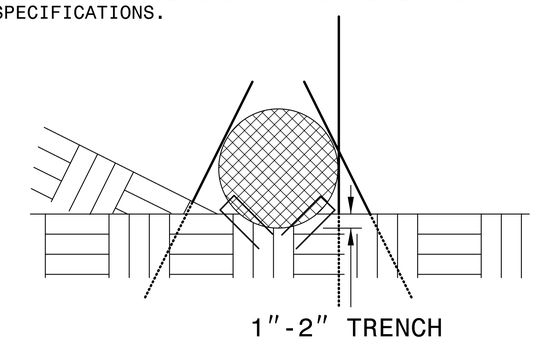

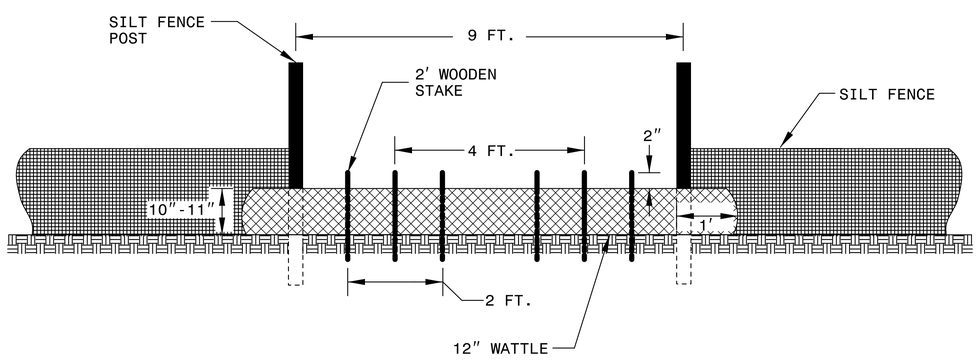

VIEW FROM SLOPE

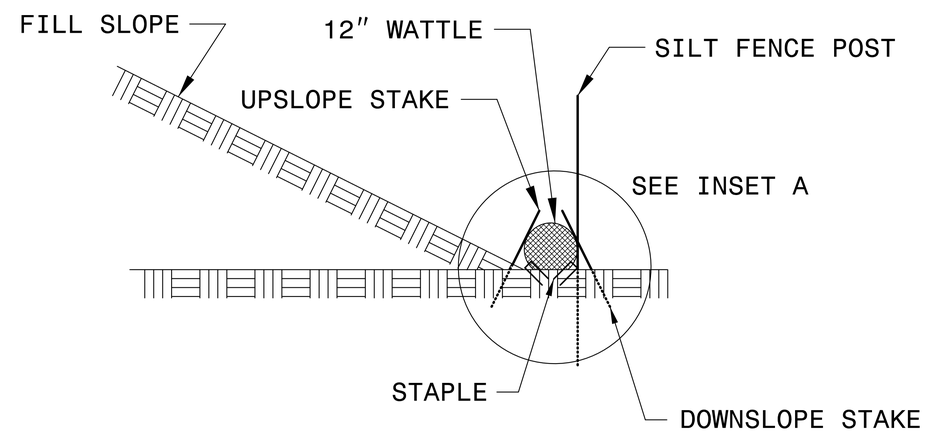

SIDE VIEW

PROJECT REFERENCE NO.	SHEET NO.
17.BP.2.R.54	EC-3
R/W SHEET NO.	

COIR FIBER WATTLE WITH POLYACRYLAMIDE (PAM) DETAIL

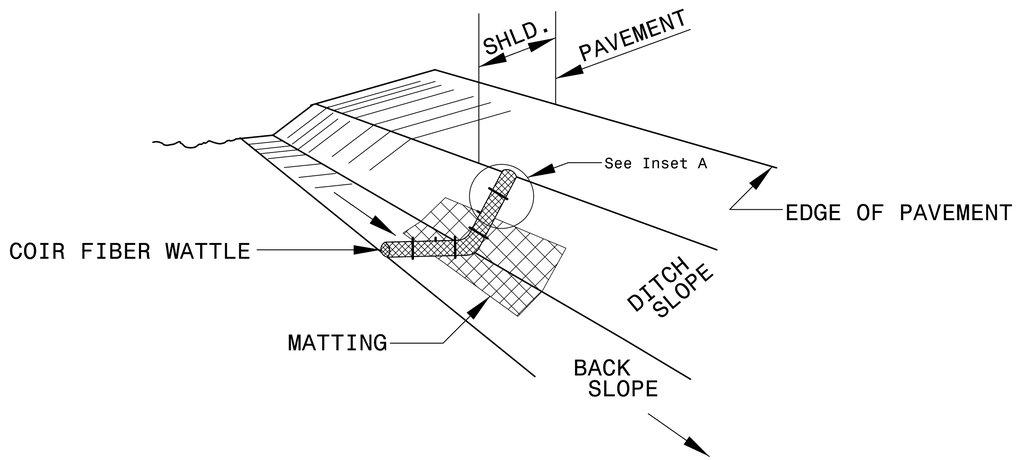

ISOMETRIC VIEW

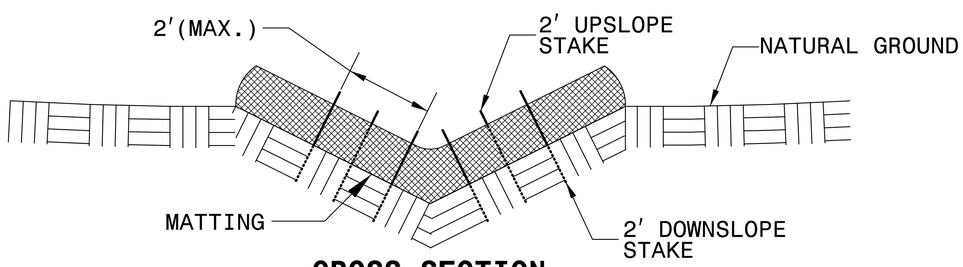

CROSS SECTION VEE DITCH

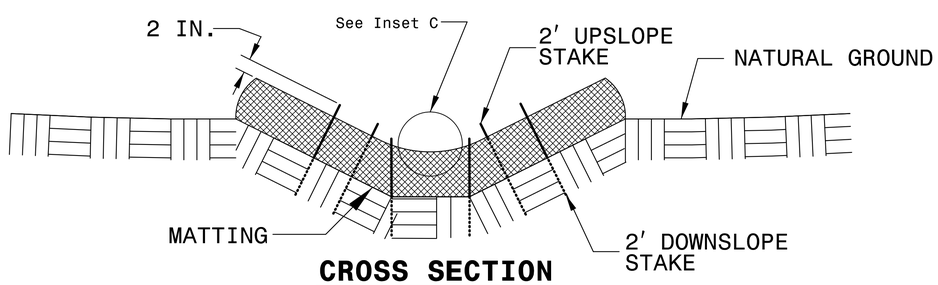

CROSS SECTION TRAPEZOIDAL DITCH

NOTES:

USE MINIMUM 12 IN. DIAMETER COIR FIBER (COCONUT FIBER) WATTLE.

USE 2 FT. WOODEN STAKES WITH A 2 IN. BY 2 IN. NOMINAL CROSS SECTION.

ONLY INSTALL WATTLE(S) TO A HEIGHT IN DITCH SO FLOW WILL NOT WASH AROUND WATTLE AND SCOUR DITCH SLOPES AND AS DIRECTED.

INSTALL A MINIMUM OF 2 UPSLOPE STAKES AND 4 DOWNSLOPE STAKES AT AN ANGLE TO WEDGE WATTLE TO BOTTOM OF DITCH.

PROVIDE STAPLES MADE OF 0.125 IN. DIAMETER STEEL WIRE FORMED INTO A U SHAPE NOT LESS THAN 12" IN LENGTH.

INSTALL STAPLES APPROXIMATELY EVERY 1 LINEAR FOOT ON BOTH SIDES OF WATTLE AND AT EACH END TO SECURE IT TO THE SOIL.

INSTALL MATTING IN ACCORDANCE WITH SECTION 1631 OF THE STANDARD SPECIFICATIONS.

PRIOR TO POLYACRYLAMIDE (PAM) APPLICATION, OBTAIN A SOIL SAMPLE FROM PROJECT LOCATION, AND FROM OFFSITE MATERIAL, AND ANALYZE FOR APPROPRIATE PAM FLOCCULANT TO BE APPLIED TO EACH WATTLE.

INITIALLY APPLY 2 OUNCES OF ANIONIC OR NEUTRALLY CHARGED PAM OVER WATTLE WHERE WATER WILL FLOW AND 1 OUNCE OF PAM ON MATTING ON EACH SIDE OF WATTLE. REAPPLY PAM AFTER EVERY RAINFALL EVENT THAT IS EQUAL TO OR EXCEEDS 0.50 IN.

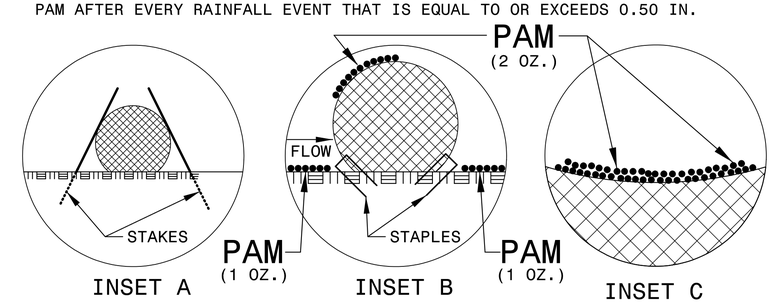

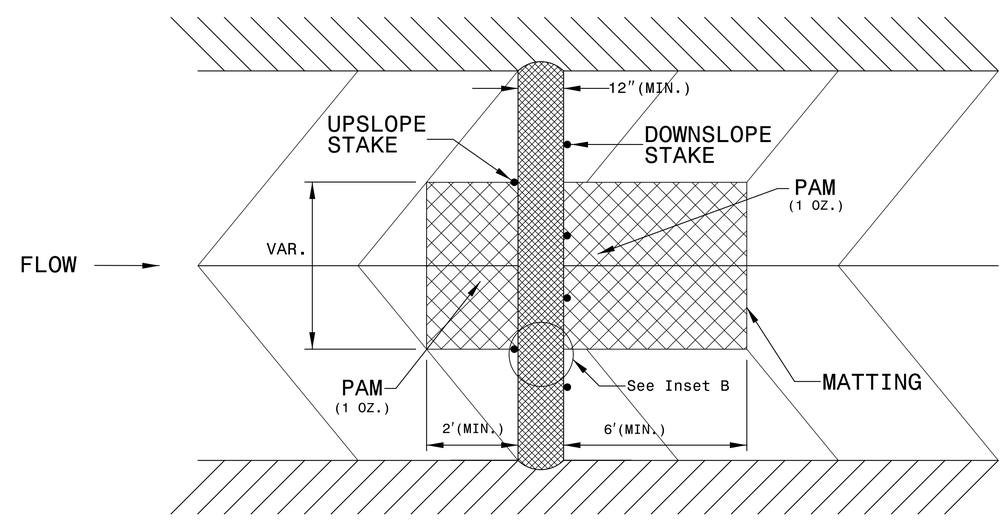

TOP VIEW

PROJECT REFERENCE NO.	SHEET NO.
17.BP.2.R.54	EC-4

DIVISION OF HIGHWAYS
STATE OF NORTH CAROLINA

SOIL STABILIZATION TIMEFRAMES

SITE DESCRIPTION	STABILIZATION TIME	TIMEFRAME EXCEPTIONS
PERIMETER DIKES, SWALES, DITCHES AND SLOPES	7 DAYS	NONE
HIGH QUALITY WATER (HQW) ZONES	7 DAYS	NONE
SLOPES STEEPER THAN 3:1	7 DAYS	IF SLOPES ARE 10' OR LESS IN LENGTH AND ARE NOT STEEPER THAN 2:1, 14 DAYS ARE ALLOWED.
SLOPES 3:1 OR FLATTER	14 DAYS	7 DAYS FOR SLOPES GREATER THAN 50' IN LENGTH.
ALL OTHER AREAS WITH SLOPES FLATTER THAN 4:1	14 DAYS	NONE, EXCEPT FOR PERIMETERS AND HQW ZONES.

HNTB NORTH CAROLINA, P.C.
343 E. Six Forks Road, Suite 200
Raleigh, North Carolina 27609
NC License No: C-1554

PROJECT REFERENCE NO.	SHEET NO.
17.BP.2.R.54	EC-5
R/W SHEET NO.	

BEN HENEGAR, E.I.
EROSION CONTROL
LEVEL III
CERTIFICATION #3564

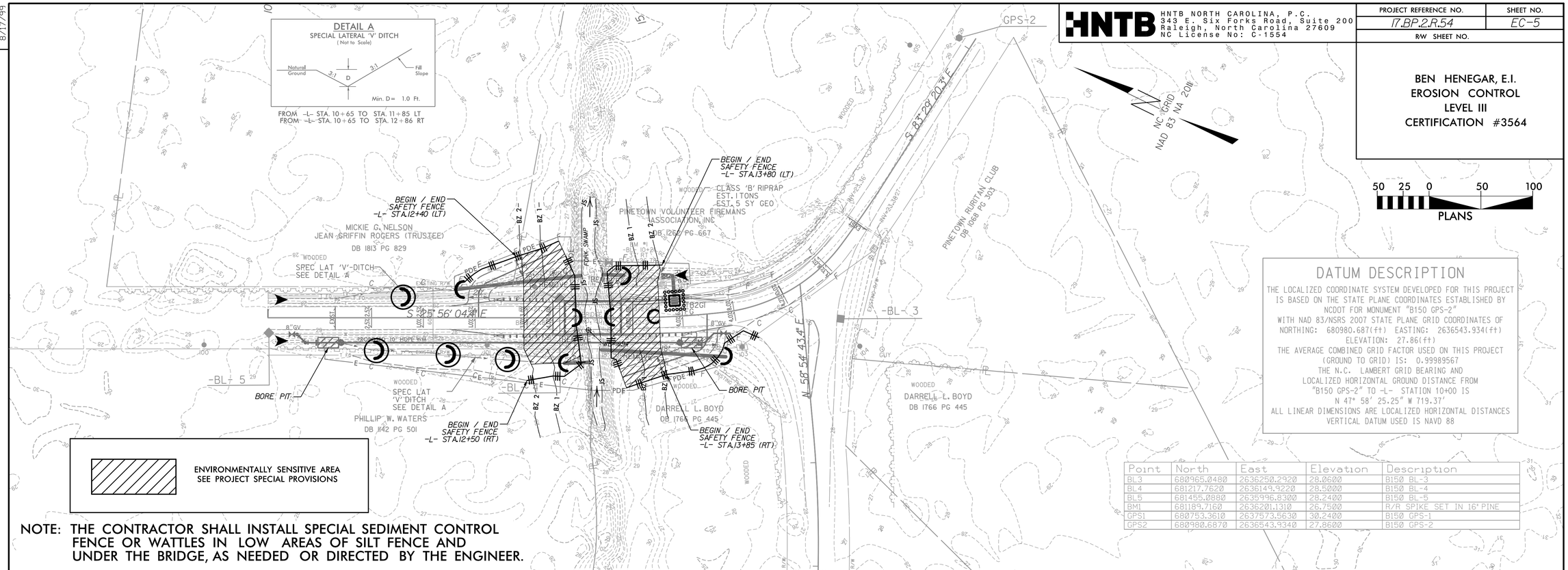

NOTE: THE CONTRACTOR SHALL INSTALL SPECIAL SEDIMENT CONTROL FENCE OR WATTLES IN LOW AREAS OF SILT FENCE AND UNDER THE BRIDGE, AS NEEDED OR DIRECTED BY THE ENGINEER.

DATUM DESCRIPTION

THE LOCALIZED COORDINATE SYSTEM DEVELOPED FOR THIS PROJECT IS BASED ON THE STATE PLANE COORDINATES ESTABLISHED BY NCDOT FOR MONUMENT "B150 GPS-2"
WITH NAD 83/NSRS 2007 STATE PLANE GRID COORDINATES OF
NORTHING: 680980.687(ft) EASTING: 2636543.934(ft)
ELEVATION: 27.86(ft)
THE AVERAGE COMBINED GRID FACTOR USED ON THIS PROJECT (GROUND TO GRID) IS: 0.99989567
THE N.C. LAMBERT GRID BEARING AND LOCALIZED HORIZONTAL GROUND DISTANCE FROM "B150 GPS-2" TO -L- STATION 10+00 IS
N 47° 58' 25.25" W 719.37'
ALL LINEAR DIMENSIONS ARE LOCALIZED HORIZONTAL DISTANCES
VERTICAL DATUM USED IS NAVD 88

Point	North	East	Elevation	Description
BL3	680965.0480	2636250.2920	28.0600	B150 BL-3
BL4	681217.7620	2636149.9220	28.5000	B150 BL-4
BL5	681455.0880	2635996.8300	28.2400	B150 BL-5
BM1	681189.7160	2636201.1310	26.7500	R/R SPIKE SET IN 16" PINE
GPS1	680753.3610	2637573.5630	30.2400	B150 GPS-1
GPS2	680980.6870	2636543.9340	27.8600	B150 GPS-2

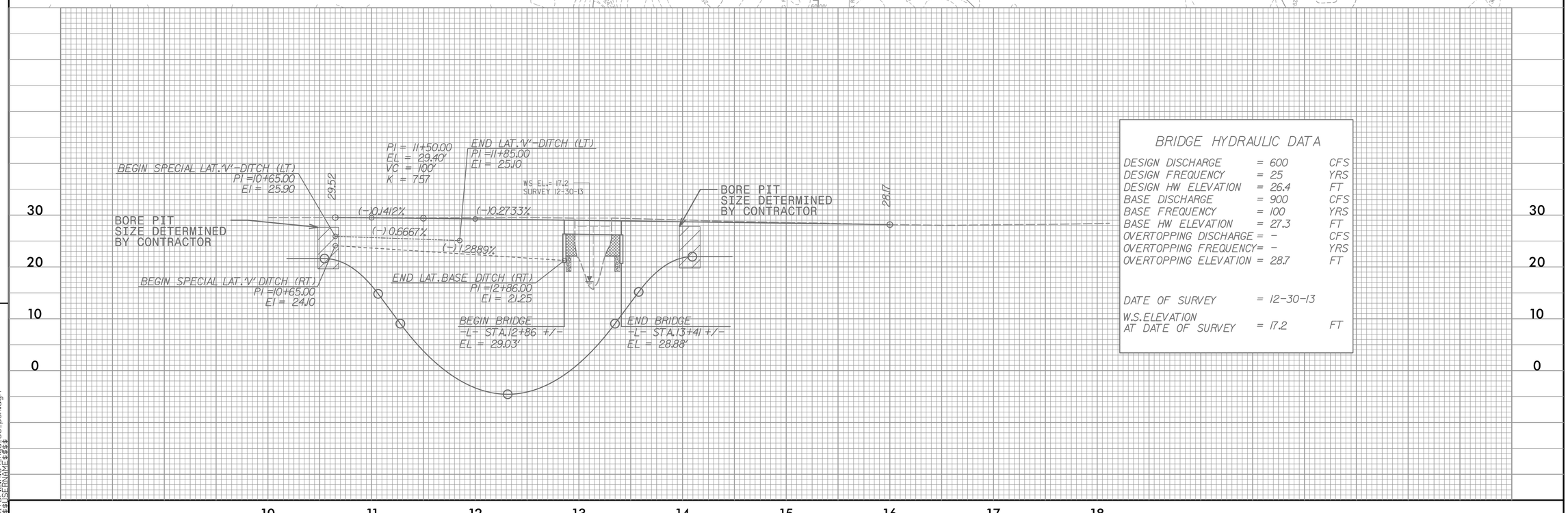

BRIDGE HYDRAULIC DATA

DESIGN DISCHARGE	= 600	CFS
DESIGN FREQUENCY	= 25	YRS
DESIGN HW ELEVATION	= 26.4	FT
BASE DISCHARGE	= 900	CFS
BASE FREQUENCY	= 100	YRS
BASE HW ELEVATION	= 27.3	FT
OVERTOPPING DISCHARGE	= -	CFS
OVERTOPPING FREQUENCY	= -	YRS
OVERTOPPING ELEVATION	= 28.7	FT
DATE OF SURVEY	= 12-30-13	
W.S.ELEVATION AT DATE OF SURVEY	= 17.2	FT

REVISIONS

8/17/99

10:25:33 AM
17.BP.2.R.54_hyd_ec_psh.dgn
$$$$USERNAME$$$$

TIP PROJECT: 17.BP.2.R.54

T.I.P. NO.	SHEET NO.
17.BP.2.R.54	UC–1

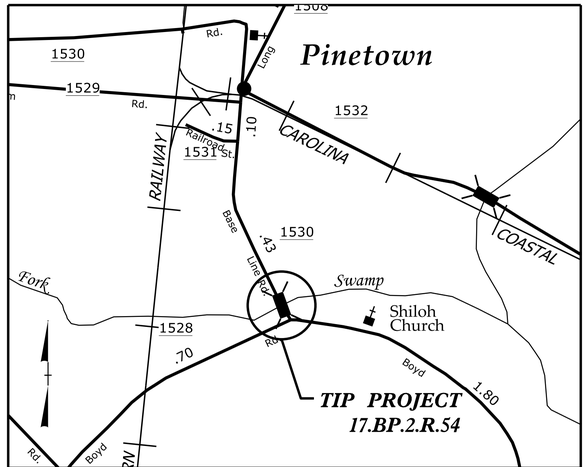

VICINITY MAP
(NOT TO SCALE)

STATE OF NORTH CAROLINA
DIVISION OF HIGHWAYS

UTILITY CONSTRUCTION PLANS
PITT COUNTY

LOCATION: BRIDGE #150 FORK SWAMP ON SR 1530

TYPE OF WORK: WATER MAIN RELOCATION

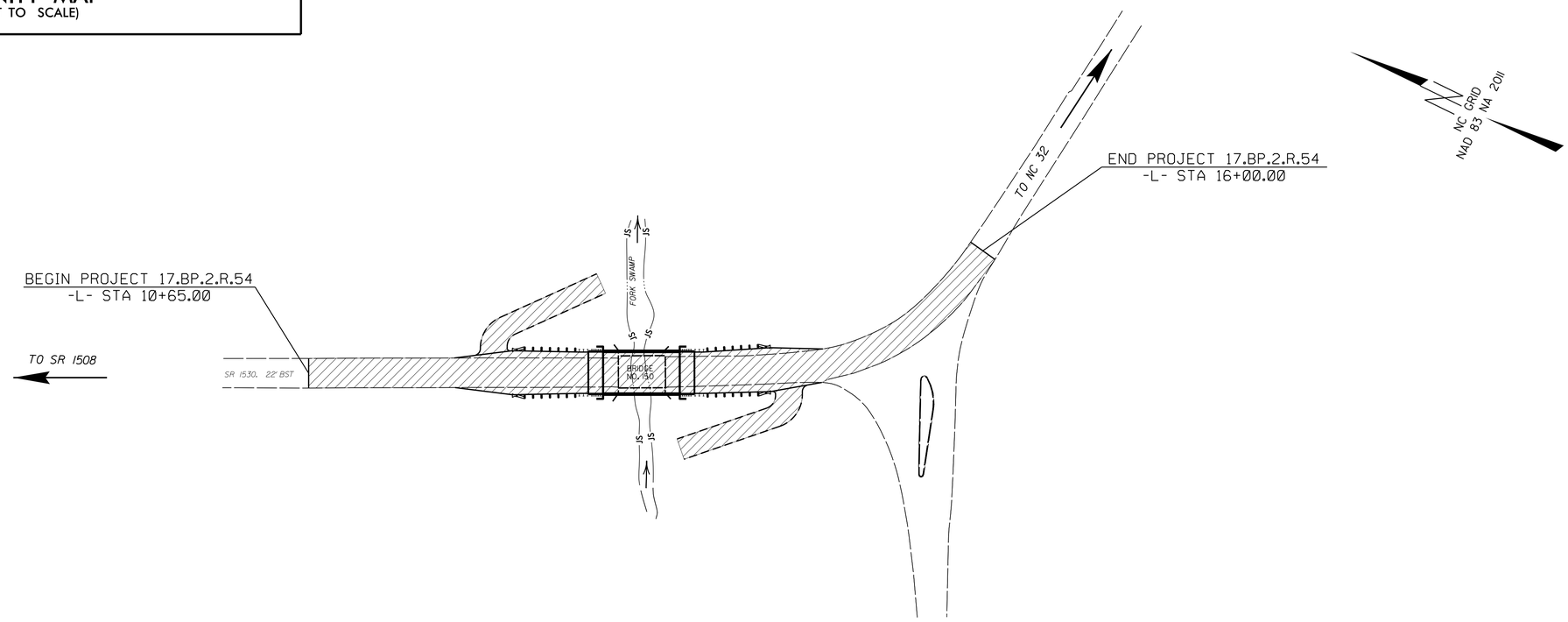

GRAPHIC SCALES

50 25 0 50 100
PLANS

50 25 0 50 100
PROFILE (HORIZONTAL)

10 5 0 10 20
PROFILE (VERTICAL)

INDEX OF SHEETS

SHEET NO.	DESCRIPTION
UC–1	TITLE SHEET
UC–2	SUMMARY OF QUANTITIES
UC–3	UTILITY CONSTRUCTION SHEET
UC–4	DETAILS SHEET

WATER OWNER ON PROJECT

(1) BEAUFORT COUNTY (NORTHSIDE) – WATER

SEAL

NORTH CAROLINA PROFESSIONAL SEAL 11274 ENGINEER BRYCE EDWARD EATMON, JR.

Bryce Eatmon
37010789B84EC407...
11/24/2015

STATE OF NORTH CAROLINA DEPARTMENT OF TRANSPORTATION

PREPARED IN THE OFFICE OF:
DIVISION OF HIGHWAYS
DIVISION 2 – DDC

P.O. BOX 1587
GREENVILLE, NC 27835
PHONE (252) 439–2800
FAX (252) 830–3352

ED EATMON, P.E. — UTILITIES ENGINEER
JOSH WILDER — UTILITIES PROJECT DESIGNER

09/08/99
01-OCT-2015 15:34
G:\PROJECTS\BEAUFORT\beaufort 150\Beaufort150_ddc2_uci.dgn
$$$$USERNAME$$$$

PROJECT REFERENCE NO.	SHEET NO.
17.BP.2.R.54	UC-2

UTILITIES ENGINEER

NORTH CAROLINA PROFESSIONAL SEAL 11274 ENGINEER BRYCE EDWARD EATMON, III

DocuSigned by: Bryce Eatmon 11/24/2015

UTILITY CONSTRUCTION

STATE OF NORTH CAROLINA
DIVISION OF HIGHWAYS
SUMMARY OF QUANTITIES

WATER MAIN	QUANTITY	UNIT	ITEM DESCRIPTION
	124	LF	8" DI PIPE - PC 350 (AWWA C600)
	370	LF	10" HDPE PIPE - DR9 (AWWA C906)
	2	EA	8" GATE VALVE AND VALVE BOX
	2	EA	DI PIPE TO HDPE TRANSITION REDUCER
	1	EA	CONCRETE THRUST COLLAR
	3	EA	MECHANICAL JOINTS WITH GRIPPING RING RESTRAINTS
	478	LF	ABANDON 8" UTILITY PIPE
	275	LF	TEMPORARY SILT FENCE
	0.2	ACRES	SEEDING AND MULCHING

REVISIONS

8/17/99

01-OCT-2015 15:34
C:\WORKSPACE\BEAUFORT\beaufort 150\Beaufort150.ddc2.uc2.dgn
$$$$USERNAME$$$$

PROJECT REFERENCE NO.	SHEET NO.
17.BP.2.R.54	UC 3
R/W SHEET NO.	

UTILITIES ENGINEER

NORTH CAROLINA PROFESSIONAL SEAL 1274 ENGINEER BRYCE EDWARD EATMON III
DocuSigned by: Bryce Eatmon III 2/9/2015 8:46:42 PM EST
11/24/2015

UTILITY CONSTRUCTION

NOTES:

1. 10" HDPE WATER MAIN TO CONFORM TO THE FOLLOWING: AWWA C906, AWWA M55, PRESSURE CLASS 200, DR9, DUCTILE IRON PIPE SIZE (DIPS) DIMENSIONS, AND MATERIAL DESIGNATION PE 3408 AND NSF APPROVED FOR POTABLE WATER.
2. THE PROPOSED WATER LINE RELOCATION DOES NOT IMPACT ANY ENVIRONMENTALLY SENSITIVE AREAS AND NO ENVIRONMENTAL PERMITS ARE REQUIRED.
3. LOCATION AND ELEVATION OF ALL UNDERGROUND UTILITIES SHALL BE FIELD VERIFIED BY CONTRACTOR AND MAINTAIN 18" MINIMUM VERTICAL SEPARATION.
4. RECONNECT ALL WATER SERVICE LINES AS NECESSARY.
5. BEAUFORT COUNTY WATER WILL COLLECT ALL BACTERIOLOGICAL WATER SAMPLES.
6. A BEAUFORT COUNTY EMPLOYEE WILL HAVE TO BE PRESENT FOR THE PRESSURE TEST.
7. A MINIMUM 48 HOUR NOTICE IS REQUIRED BEFORE ANY SECTION OF THE WATER MAIN CAN BE SHUT DOWN.
8. TRACER WIRE NEEDS TO BE ADDED TO ALL NEWLY INSTALLED PIPE AS REQUIRED BY NORTH CAROLINA GENERAL STATUTES CHAPTER 87-121G
9. A TEMPORARY BLOW OFF ASSEMBLY WILL NEED TO BE INSTALLED FOR THE PURPOSE OF FLUSHING THE NEW WATER LINE.

PLAN

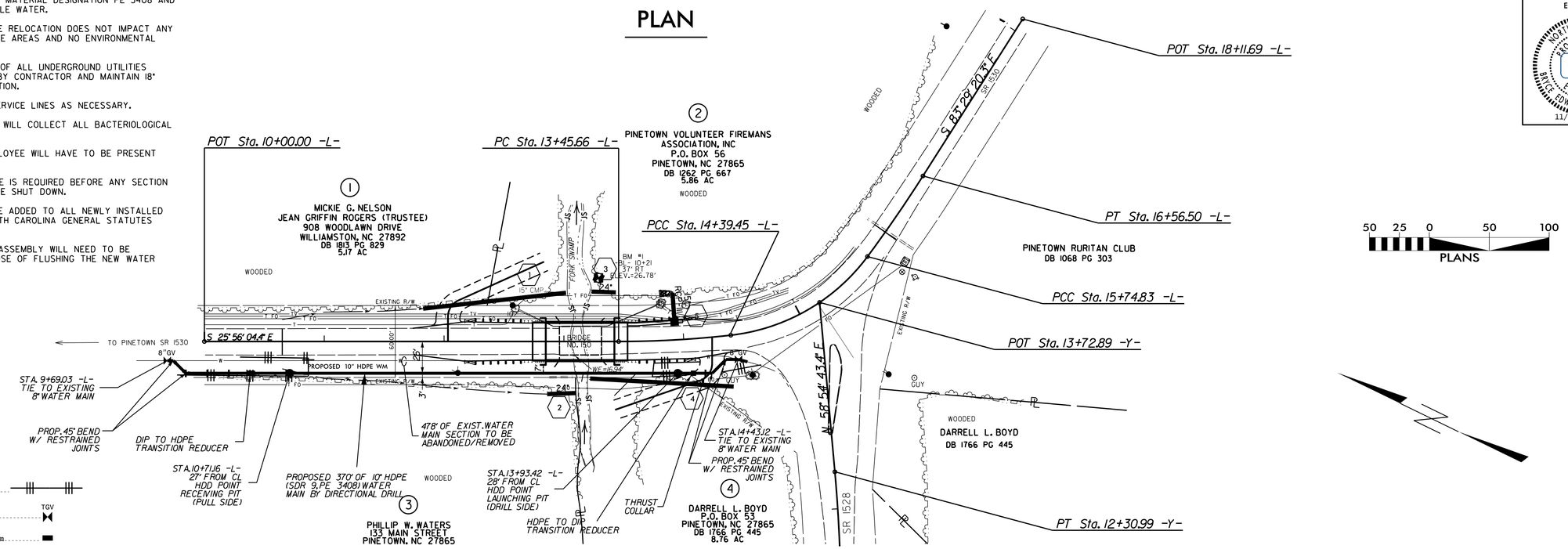

LEGEND:

Temporary Silt Fence.....

Tapping Gate Valve.....

HDPE to DIP Transition.....

Thrust Collar.....

PROFILE ALONG PROPOSED WATER LINE -WM-

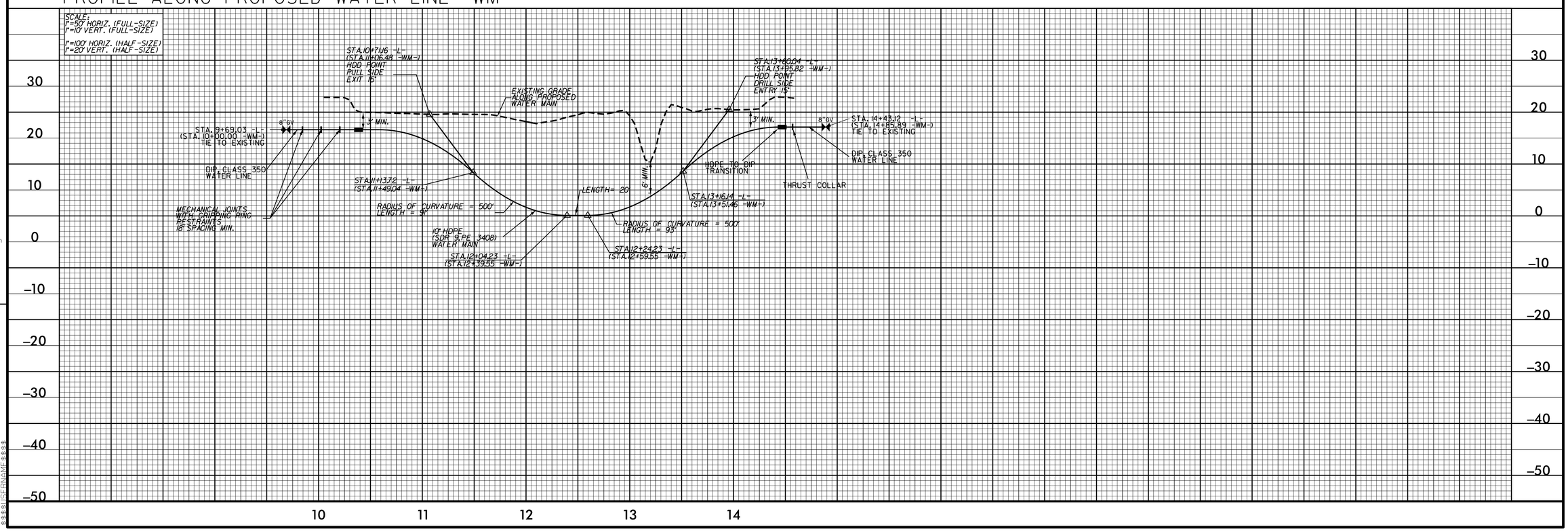

REVISIONS

8/17/99

01-OCT-2015 15:34
C:\SS\DGN\PROJECT\BEAUFORT\beaufort 150\Beaufort150_ddc2_uc3.dgn
$$$$USERNAME$$$$

PROJECT REFERENCE NO.	SHEET NO.
17.BP.2.R.54	UC-4

UTILITIES ENGINEER

NORTH CAROLINA PROFESSIONAL SEAL 11274 ENGINEER RYCE EDWARD EATMON, III

Digitally signed by Ryce Eatmon
DN: cn=Ryce Eatmon, o=Mott MacDonald, ou=Transportation, c=US
11/24/2015

UTILITY CONSTRUCTION DETAILS SHEET

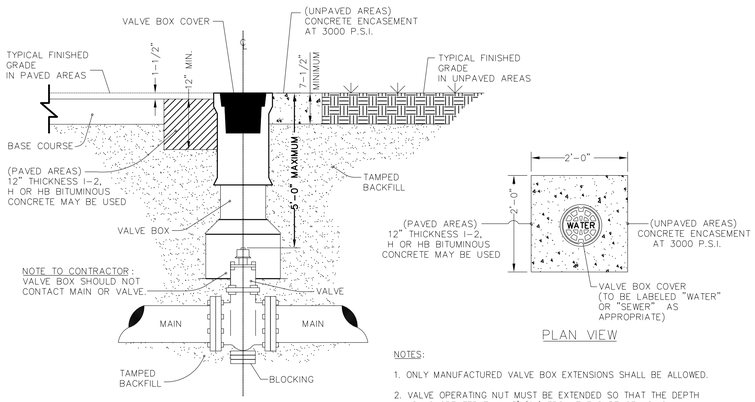

NOTES:

1. ONLY MANUFACTURED VALVE BOX EXTENSIONS SHALL BE ALLOWED.
2. VALVE OPERATING NUT MUST BE EXTENDED SO THAT THE DEPTH IS NO GREATER THAN 5' (ft.) FROM THE SURFACE USING A MANUFACTURER APPROVED EXTENSION KIT.
3. PRECAST CONCRETE ENCASEMENT IS ALLOWED OUTSIDE OF PAVED AREAS.

TYPICAL VALVE BOX

NTS

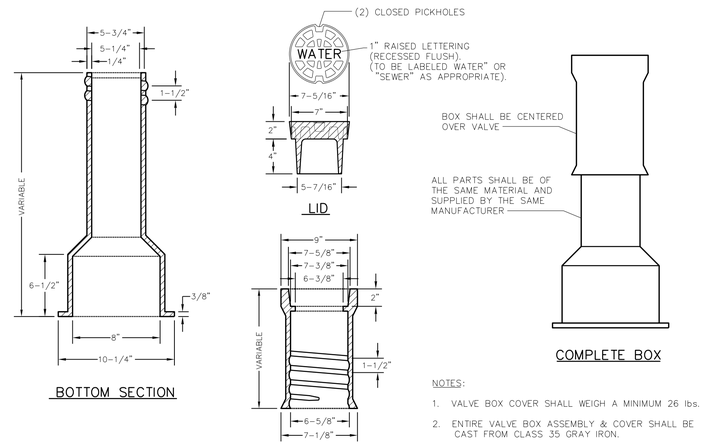

NOTES:

1. VALVE BOX COVER SHALL WEIGH A MINIMUM 26 lbs.
2. ENTIRE VALVE BOX ASSEMBLY & COVER SHALL BE CAST FROM CLASS 35 GRAY IRON.
3. ASSEMBLY SHALL BE DOMESTICALLY MADE AND MANUFACTURED IN THE U.S.A.

TYPICAL VALVE BOX

NTS

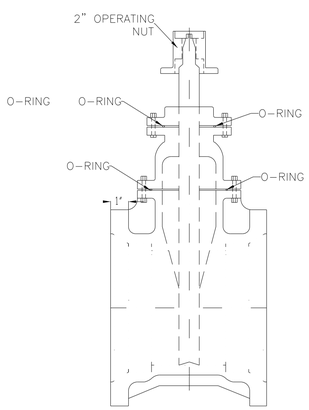

TYPICAL RESILIENT MECHANCIAL JOINT GATE VALVE DETAIL

NTS

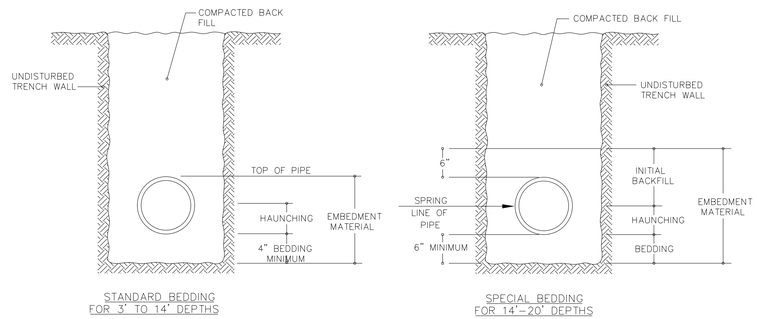

NOTES:

1. EMBEDMENT MATERIAL MUST BE CLASS I (NO. 67 OR NO. 78M WASHED STONE IS TYPICALLY USED).
2. EMBEDMENT MATERIAL SHALL BE COMPACTED TO A MINIMUM 95% STANDARD PROCTOR DENSITY FOR CLASS I MATERIAL.
3. STANDARD BEDDING SHALL BE UTILIZED FOR ALL CASES WHERE TRENCH BOTTOMS ARE UNSTABLE DUE TO SOIL TYPE, OR MOISTURE CONDITIONS.

TYPICAL BEDDING FOR FLEXIBLE & SEMI-RIGID PIPE

NTS

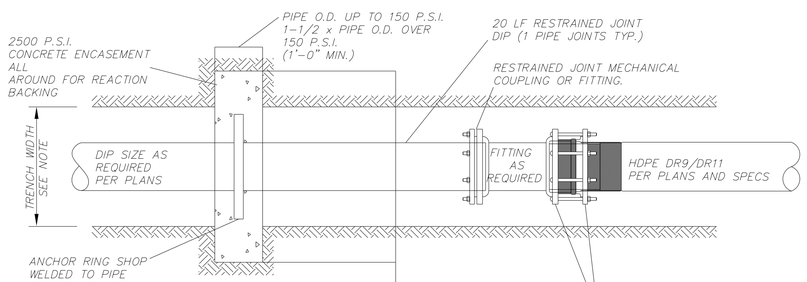

ANCHOR RING DIMENSIONS		
NOMINAL PIPE SIZE	O.D. OF RINGS	THICKNESS
4" – 12"	PIPE O.D. + 6"	1/2"
16" – 24"	PIPE O.D. + 7"	3/4"
30" & 36"	PIPE O.D. + 8"	1"

TYPICAL DIP TO HDPE TRANSITION DETAIL WITH THRUST COLLAR

NTS

8/17/99

23-OCT-2015 08:23
C:\PROJECTS\BEAUFORT\beaufort 150\Beaufort150.dgn
USER:CHAMPESS

NOTE: Approximate quantities only. Unclassified excavation, Borrow Excavation, Fine Grading, Clearing and Grubbing, Removal of Existing Pavement and Breaking of Existing Pavement will be paid for at the contract Lump Sum price for "Grading".

DIVISION OF HIGHWAYS
STATE OF NORTH CAROLINA

CROSS-SECTION SUMMARY

IN CUBIC YARDS

NOTE: EMBANKMENT COLUMN DOES NOT INCLUDE BACKFILL FOR UNDERCUT.

LOCATION (-L-)	UNCLASSIFIED EXCAVATION	UNDERCUT	EMBANKMENT
11+00.00	0	0	0
11+50.00	119	0	75
12+00.00	134	0	129
12+50.00	140	0	202
12+75.00	87	0	112
12+86.00	43	0	37
	BRIDGE		
13+41.00	0	0	0
13+50.00	21	0	32
13+84.44	58	0	159
13+91.25	7	0	37
14+00.00	10	0	50
14+50.00	51	0	149
14+70.00	17	0	1
15+00.00	25	0	0
15+50.00	40	0	0

LOCATION (-D1-)	UNCLASSIFIED EXCAVATION	UNDERCUT	EMBANKMENT
10+18.51	0	0	0
10+37.88	0	0	32
10+50.00	0	0	30
10+75.00	0	0	58
11+00.00	0	0	31

LOCATION (-D2-)	UNCLASSIFIED EXCAVATION	UNDERCUT	EMBANKMENT
10+19.46	0	0	0
10+40.51	0	0	72
10+50.00	0	0	49
10+75.00	0	0	101
11+00.00	2	0	42
11+05.00	1	0	2

Rev. 3/6/01
28-OCT-2015 11:55
G:\PROJECTS\BEAUFORT\beaufort150\Beaufort150.dde2_x1a.dgn
$$$$USERNAME$$$$

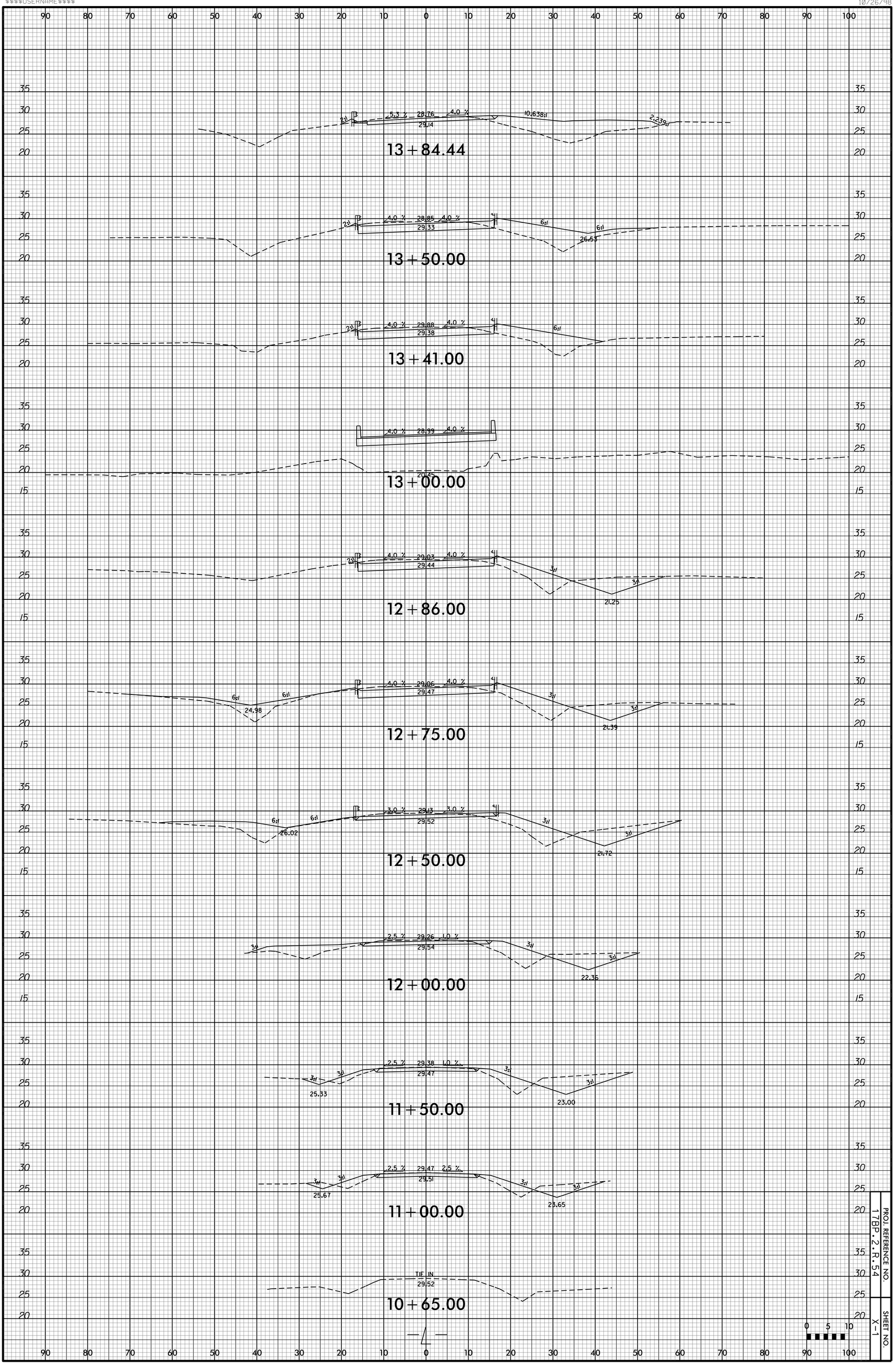
13+84.44
5.3 %
28.76
4.0 %
29.14
10:1638:1
2:1
2:239:1
13+50.00
4.0 %
28.85
4.0 %
29.33
6:1
26.63
13+41.00
4.0 %
29.88
4.0 %
29.38
13+00.00
4.0 %
28.99
4.0 %
20.45
12+86.00
4.0 %
29.03
4.0 %
29.44
3:1
21.25
12+75.00
4.0 %
29.86
4.0 %
29.47
24.98
21.39
12+50.00
3.0 %
29.43
3.0 %
29.52
26.02
21.72
12+00.00
2.5 %
29.26
1.0 %
29.54
22.36
11+50.00
2.5 %
29.38
1.0 %
29.47
25.33
23.00
11+00.00
2.5 %
29.47
2.5 %
29.51
25.67
23.65
10+65.00
TIE IN
29.52
PROJ. REFERENCE NO.
17BP.2.R.54
SHEET NO.
X-1
0 5 10

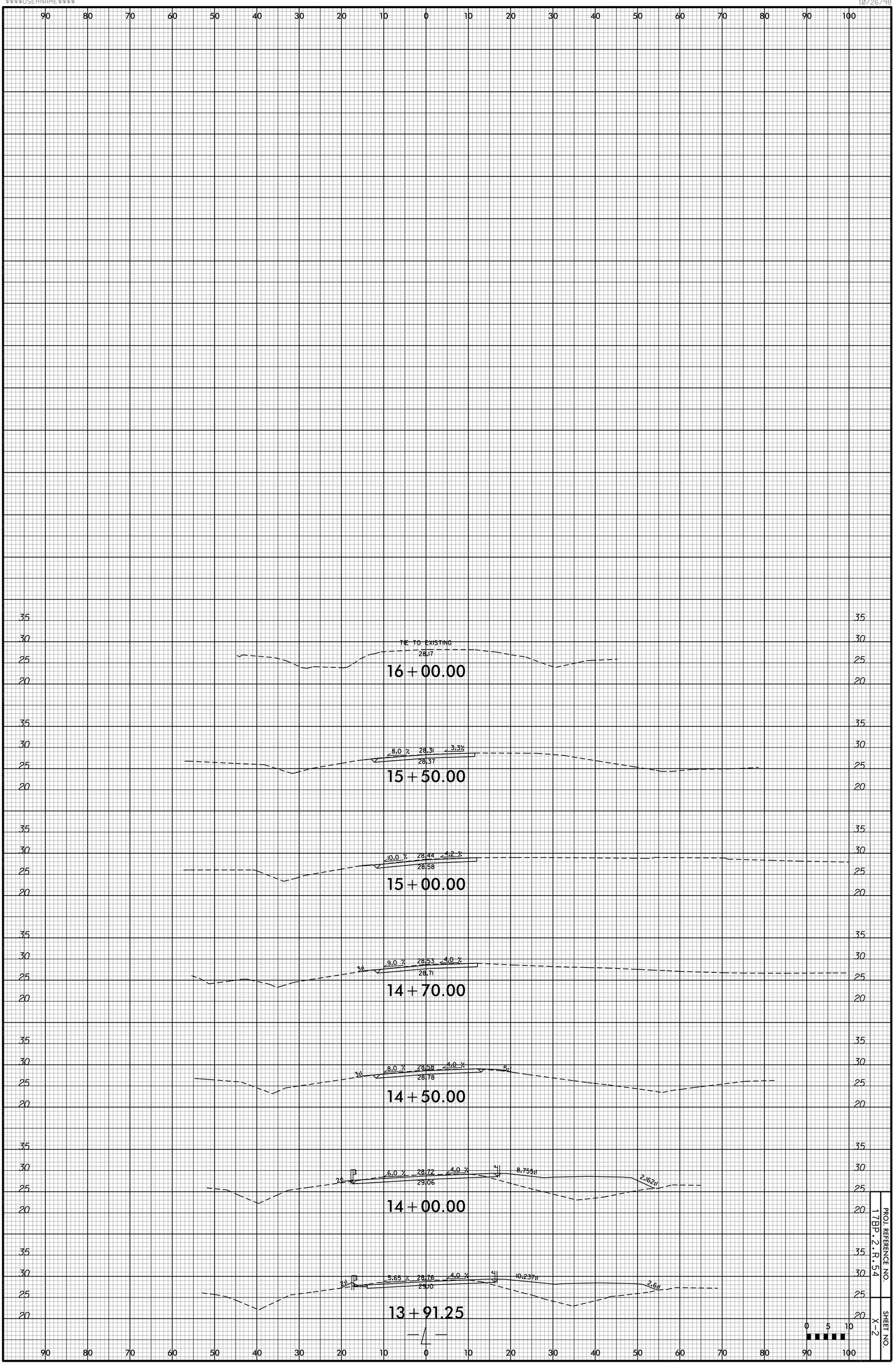
TIE TO EXISTING
28.17
16+00.00
8.0 %
28.31
3.3%
28.37
15+50.00
10.0 %
28.44
4.2 %
28.58
15+00.00
9.0 %
28.53
4.0 %
28.71
3:1
14+70.00
8.0 %
28.58
4.0 %
28.78
3:1
5:1
14+50.00
6.0 %
28.72
4.0 %
29.06
2:1
3:1
8.75:1
2.16:1
14+00.00
5.65 %
28.76
4.0 %
29.10
2:1
3:1
10.23:1
2:1
13+91.25
0 5 10
PROJ. REFERENCE NO.
17BP.2.R.54
SHEET NO.
X-2

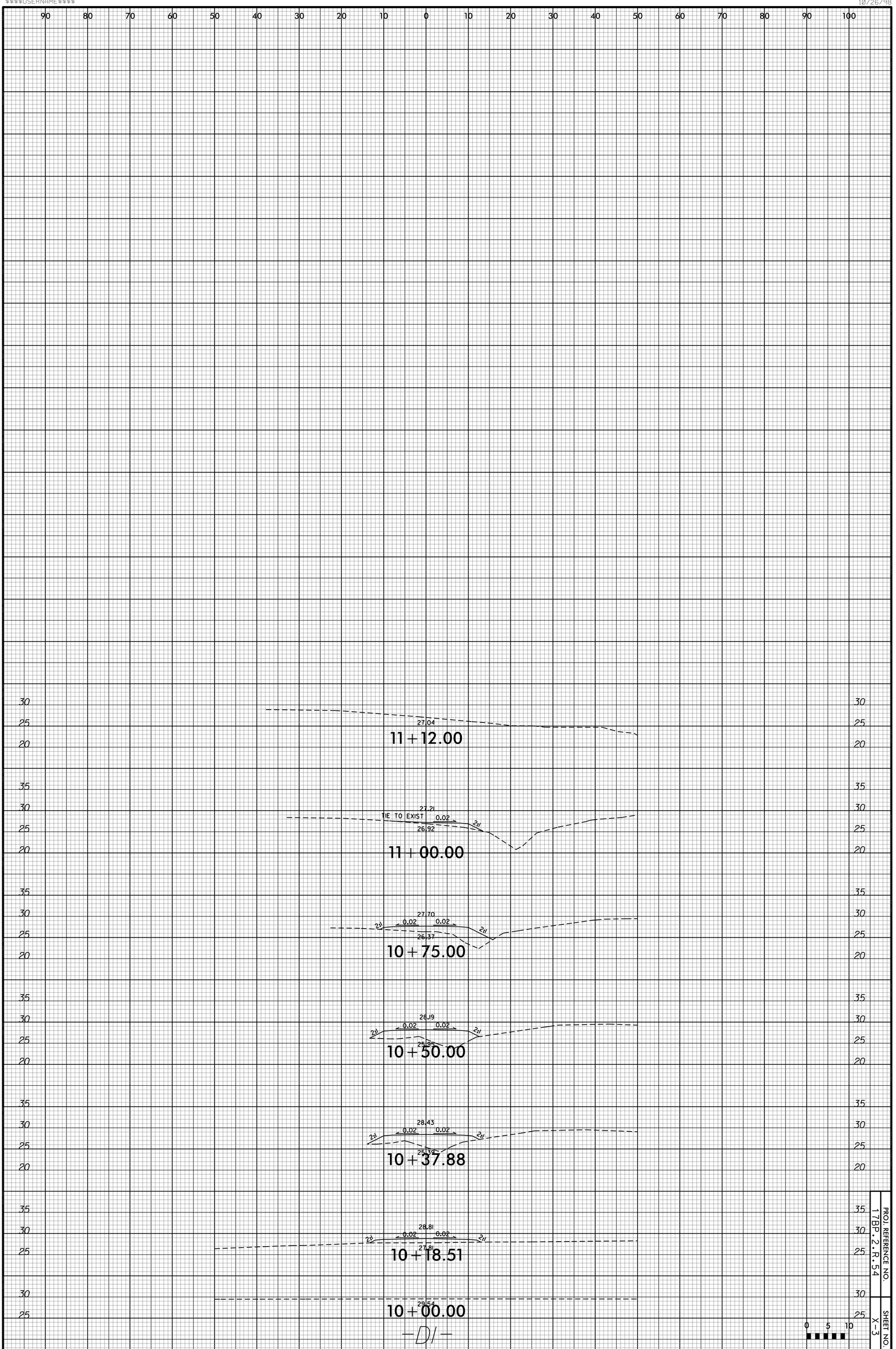

PROJ. REFERENCE NO.
17BP.2.R.54

SHEET NO.
X-3

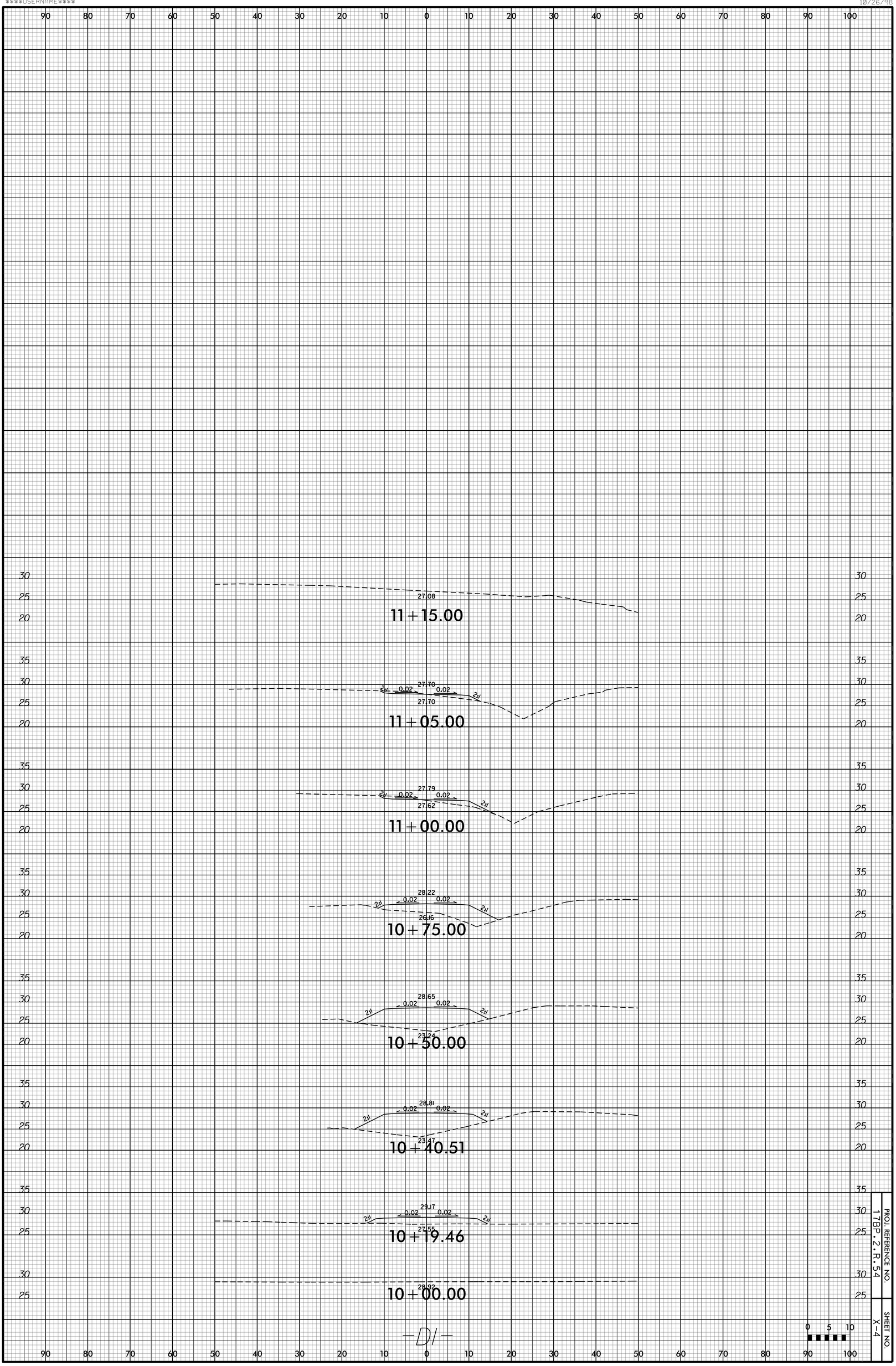
27.08
11+15.00
27.70
0.02
0.02
27.70
2:1
11+05.00
27.79
0.02
0.02
27.62
2:1
11+00.00
28.22
0.02
0.02
26.16
2:1
10+75.00
28.65
0.02
0.02
23.24
2:1
10+50.00
28.81
0.02
0.02
23.47
2:1
10+40.51
29.17
0.02
0.02
27.55
2:1
10+19.46
28.92
10+00.00
-D/-
0 5 10
PROJ. REFERENCE NO.
17BP.2.R.54
SHEET NO.
X-4

GRADE DATA

-0.1412% -0.2733%

P.I. = 11+50.00 -L-
EL = 29.40'
V.C. = 100'

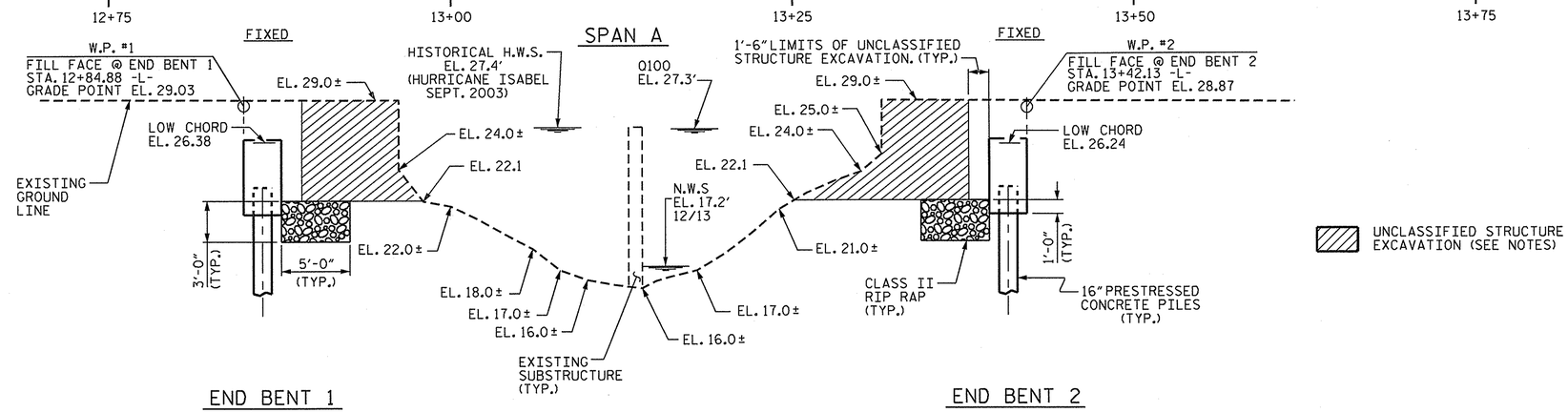

UNCLASSIFIED STRUCTURE EXCAVATION (SEE NOTES)

SECTION ALONG -L-

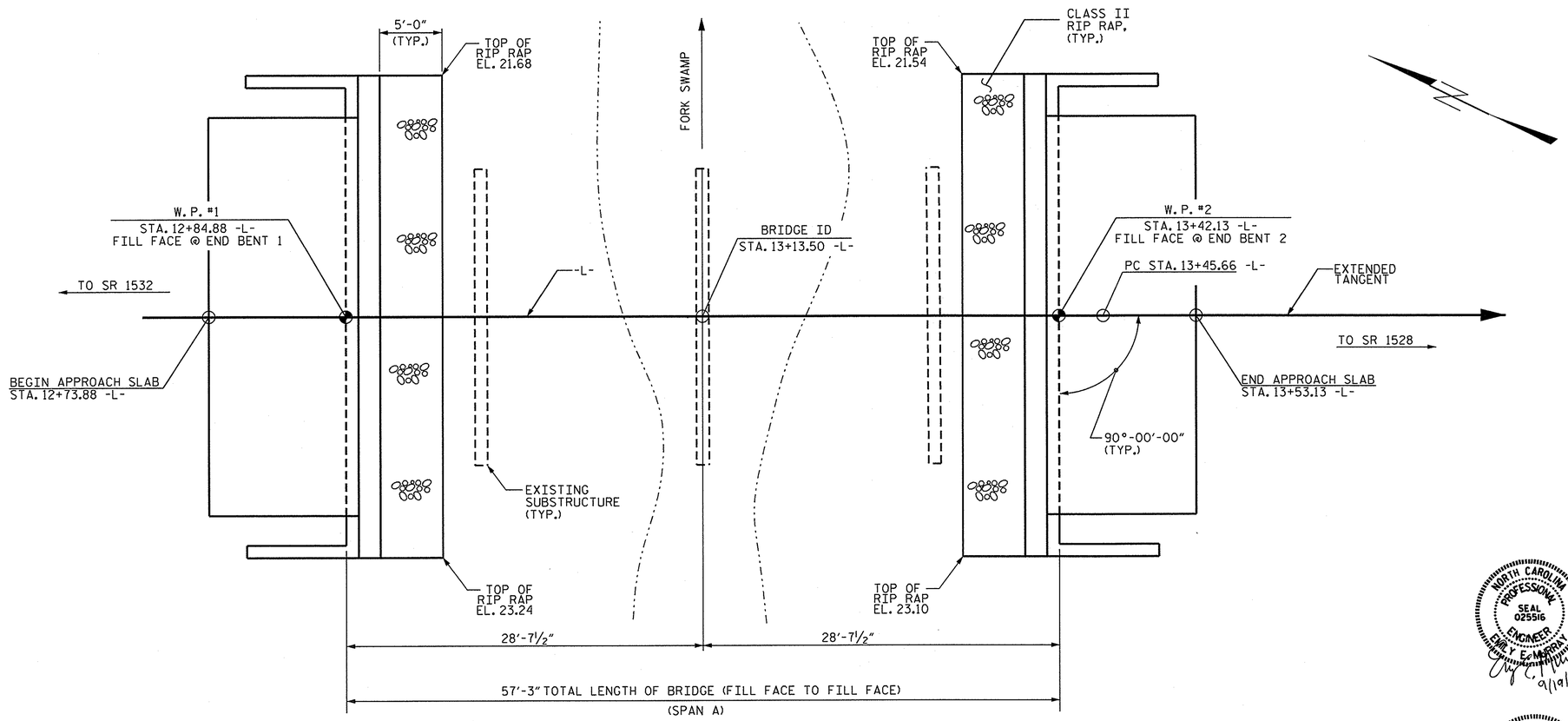

PLAN

(PILES NOT SHOWN FOR CLARITY)

I HEREBY CERTIFY THESE PLANS
ARE THE AS-BUILT PLANS

NORTH CAROLINA PROFESSIONAL SEAL 025516 ENGINEER EARLY E. MURRAY
9/19/14

NORTH CAROLINA PROFESSIONAL SEAL 22005 ENGINEER A. KEITH PASCHAL
9-19-14

PROJECT NO. 17BP.2.R.54
BEAUFORT COUNTY
STATION: 13+13.50 -L-

SHEET 1 OF 3 REPLACES BRIDGE NO. 150

STATE OF NORTH CAROLINA
DEPARTMENT OF TRANSPORTATION
RALEIGH

GENERAL DRAWING

FOR BRIDGE OVER FORK SWAMP
ON SR 1530 BETWEEN SR 1532
& SR 1528

REVISIONS						SHEET NO.
NO.	BY:	DATE:	NO.	BY:	DATE:	S-1
1			3			TOTAL SHEETS
2			4			14

DRAWN BY : S. STRICKLAND DATE : 4/14
CHECKED BY : P. N. HOLDER DATE : 4/14
DESIGN ENGINEER OF RECORD: A. K. PASCHAL DATE : 4/14

19-SEP-2014 11:18
S:\DPG1\Division2\17BP.2.R.54\Final Plans\17BP.2.R.54_SD_Complete_CS.dgn
kpaschal

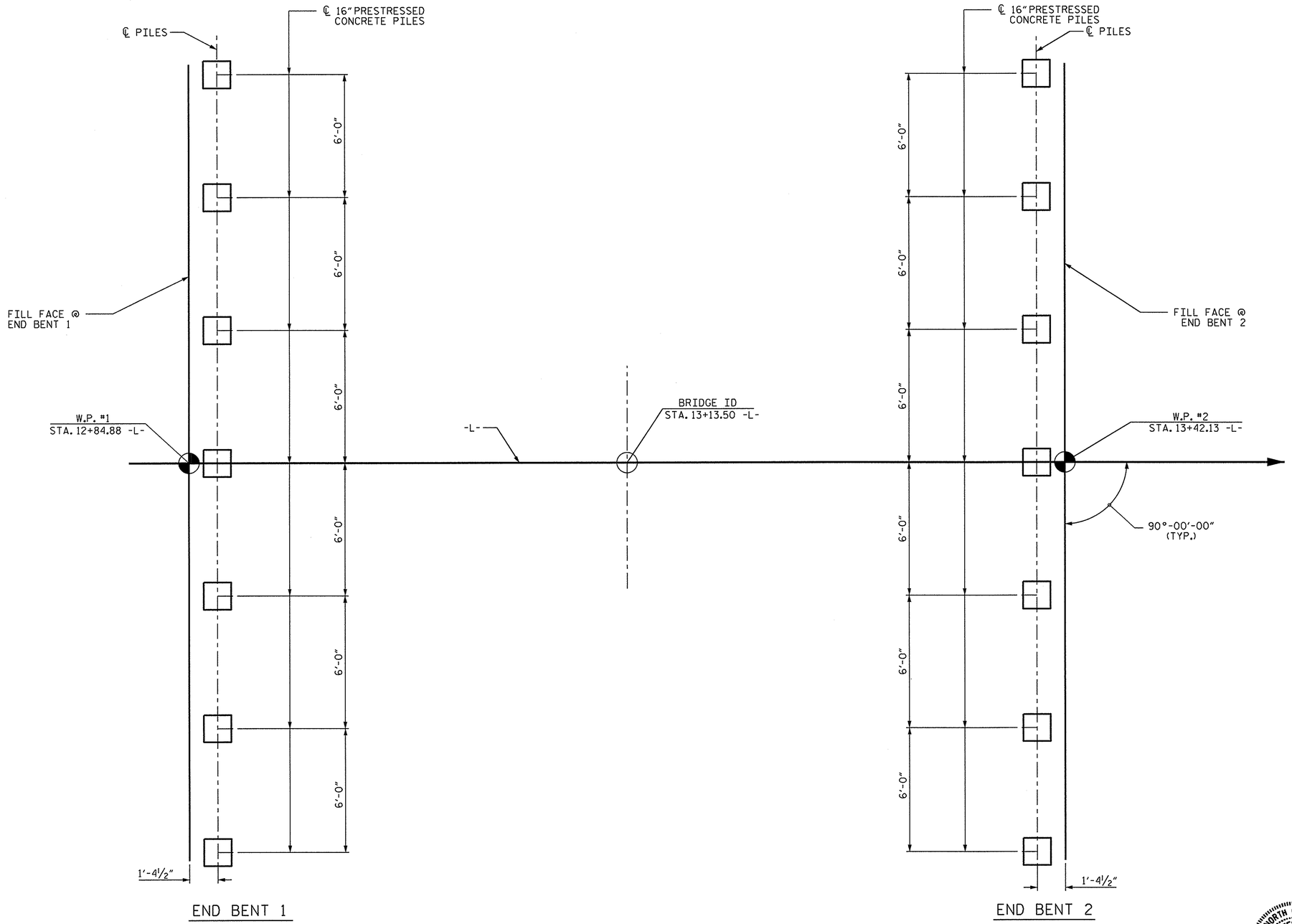

FOUNDATION LAYOUT

DIMENSIONS LOCATING PILES ARE SHOWN TO THE PILE CENTERLINE.

NOTES

FOR PILES, SEE SECTION 450 OF THE STANDARD SPECIFICATIONS.

PILES AT END BENT 1 AND 2 ARE DESIGNED FOR A FACTORED RESISTANCE OF 75 TONS PER PILE.

DRIVE PILES AT END BENT 1 AND 2 TO A REQUIRED DRIVING RESISTANCE OF 100 TONS PER PILE.

IT HAS BEEN ESTIMATED THAT A HAMMER WITH AN EQUIVALENT RATED ENERGY IN THE RANGE OF 35 TO 45 FT-KIPS PER BLOW WILL BE REQUIRED TO DRIVE PILES AT END BENT 1 AND END BENT 2. THIS ESTIMATED ENERGY RANGE DOES NOT RELEASE THE CONTRACTOR FROM PROVIDING DRIVING EQUIPMENT IN ACCORDANCE WITH SUBARTICLE 450-3(D)(2) OF THE STANDARD SPECIFICATIONS.

TESTING THE FIRST PRODUCTION PILE AT EACH END BENT WITH THE PDA DURING DRIVING, RESTRIKING OR REDRIVING IS REQUIRED. FOR PDA TESTING, SEE SECTION 450 OF THE STANDARD SPECIFICATIONS AND FOR PILE DRIVING CRITERIA, SEE PILE DRIVING CRITERIA PROVISION.

PROJECT NO. 17BP.2.R.54
BEAUFORT COUNTY
STATION: 13+13.50 -L-

SHEET 2 OF 3

NORTH CAROLINA PROFESSIONAL SEAL 22005 ENGINEER A. KEITH PASCHAL
9-19-14

STATE OF NORTH CAROLINA
DEPARTMENT OF TRANSPORTATION
RALEIGH

GENERAL DRAWING

FOR BRIDGE OVER FORK SWAMP ON SR 1530 BETWEEN SR 1532 & SR 1528

REVISIONS						SHEET NO.
NO.	BY:	DATE:	NO.	BY:	DATE:	S-2
1			3			TOTAL SHEETS
2			4			14

DRAWN BY : S. STRICKLAND DATE : 4/14
CHECKED BY : P. N. HOLDER DATE : 4/14
DESIGN ENGINEER OF RECORD: A. K. PASCHAL DATE : 4/14

19-SEP-2014 11:18
S:\DPG1\Division2\17BP.2.R.54\Final Plans\17BP.2.R.54_SD_Complete_CS.dgn
kpaschal

BM 1: RAILROAD SPIKE SET IN 16" PINE, 53' LT OF -L- STA. 13+28.90, ELEV. 26.78', NAVD 88.

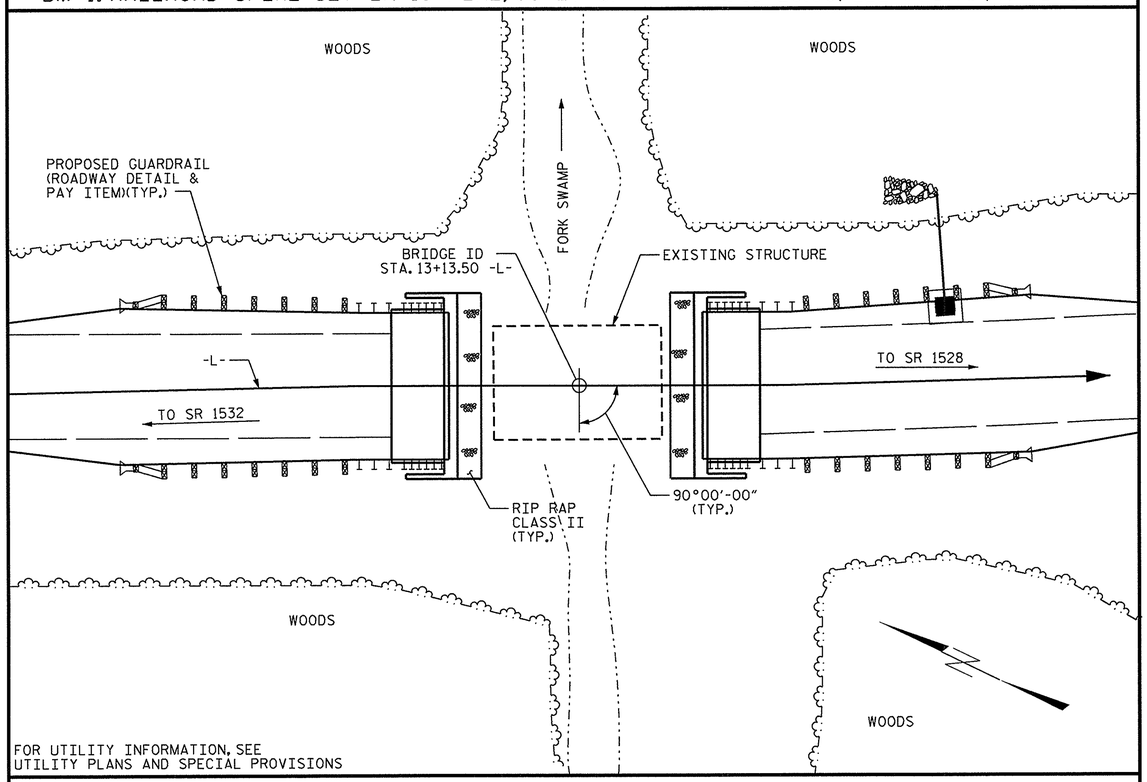

LOCATION SKETCH

HYDRAULIC DATA

DESIGN DISCHARGE	=	600 C.F.S.
FREQUENCY OF DESIGN FLOOD	=	25 YR.
DESIGN HIGH WATER ELEVATION	=	26.4'
DRAINAGE AREA	=	4.2 SQ. MI.
BASE DISCHARGE (Q100)	=	900 C.F.S.
BASE HIGH WATER ELEVATION	=	27.3'

OVERTOPPING FLOOD DATA

OVERTOPPING DISCHARGE	=	- C.F.S.
FREQUENCY OF OVERTOPPING FLOOD	=	- YR.
OVERTOPPING FLOOD ELEVATION	=	28.7'

RT. EOP @ STA. 15+21.41 -L-

NOTES:

ASSUMED LIVE LOAD = HS 93 OR ALTERNATE LOADING.

FOR OTHER DESIGN DATA AND GENERAL NOTES, SEE SHEET SN.

FOR EROSION CONTROL MEASURES, SEE EROSION CONTROL PLANS.

THIS BRIDGE IS LOCATED IN SEISMIC ZONE 1.

THIS BRIDGE HAS BEEN DESIGNED IN ACCORDANCE WITH THE AASHTO LRFD BRIDGE DESIGN SPECIFICATIONS.

THE EXISTING STRUCTURE CONSISTING OF 2 SPANS @ 17'-8" WITH A CLEAR ROADWAY WIDTH OF 24.0', AN ASPHALT WEARING SURFACE ON REINFORCED CONCRETE FLOOR ON TIMBER JOISTS SUPPORTED BY TIMBER CAP WITH TIMBER PILES AND LOCATED AT THE SAME LOCATION AS THE PROPOSED STRUCTURE SHALL BE REMOVED. THE EXISTING BRIDGE IS PRESENTLY POSTED FOR LOAD LIMIT. SHOULD THE STRUCTURAL INTEGRITY OF THE BRIDGE DETERIORATE DURING CONSTRUCTION OF THE PROPOSED BRIDGE, A LOAD LIMIT MAY BE POSTED AND MAY BE REDUCED AS FOUND NECESSARY DURING THE LIFE OF THE PROJECT.

REMOVAL OF THE EXISTING BRIDGE SHALL BE PERFORMED IN A MANNER THAT PREVENTS DEBRIS FROM FALLING INTO THE WATER. THE CONTRACTOR SHALL SUBMIT DEMOLITION PLANS FOR REVIEW AND REMOVE THE BRIDGE IN ACCORDANCE WITH ARTICLE 402-2 OF THE STANDARD SPECIFICATIONS.

THE SUBSTRUCTURE OF THE EXISTING BRIDGE INDICATED ON THE PLANS IS FROM THE BEST INFORMATION AVAILABLE. SINCE THIS INFORMATION IS SHOWN FOR THE CONVENIENCE OF THE CONTRACTOR, THE CONTRACTOR SHALL HAVE NO CLAIM WHATSOEVER AGAINST THE DEPARTMENT OF TRANSPORTATION FOR ANY DELAYS OR ADDITIONAL COST INCURRED BASED ON DIFFERENCES BETWEEN THE EXISTING BRIDGE SUBSTRUCTURE SHOWN ON THE PLANS AND THE ACTUAL CONDITIONS AT THE PROJECT SITE.

ASPHALT WEARING SURFACE IS INCLUDED IN ROADWAY QUANTITY ON ROADWAY PLANS.

THIS STRUCTURE HAS BEEN DESIGNED IN ACCORDANCE WITH HEC 18, "EVALUATING SCOUR AT BRIDGES."

THE MATERIAL SHOWN IN THE HATCHED AREA SHALL BE EXCAVATED FOR A DISTANCE OF 20 FT EACH SIDE OF CENTERLINE ROADWAY AS DIRECTED BY THE ENGINEER. THIS WORK WILL BE PAID FOR AT THE CONTRACT LUMP SUM PRICE FOR UNCLASSIFIED STRUCTURE EXCAVATION. SEE SECTION 412 OF THE STANDARD SPECIFICATIONS.

FOR GROUT FOR STRUCTURES, SEE SPECIAL PROVISIONS.

FOR CRANE SAFETY, SEE SPECIAL PROVISIONS.

FOR SUBMITTAL OF WORKING DRAWINGS, SEE SPECIAL PROVISIONS.

FOR FALSEWORK AND FORMWORK, SEE SPECIAL PROVISIONS.

TOTAL BILL OF MATERIAL

	REMOVAL OF EXISTING STRUCTURE	PDA TESTING	UNCLASSIFIED STRUCTURE EXCAVATION	CLASS A CONCRETE	BRIDGE APPROACH SLABS	REINFORCING STEEL	16" PRESTRESSED CONCRETE PILES		PILE REDRIVES	VERTICAL CONCRETE BARRIER RAIL	RIP RAP CLASS II (3'-0" THICK)	ELASTOMERIC BEARINGS	3'-0" X 1'-9" PRESTRESSED CONCRETE CORED SLABS	
	LUMP SUM	EA.	LUMP SUM		LUMP SUM	LBS.	NO.	LIN.FT.	EA.	LIN.FT.	TONS	LUMP SUM	NO.	LIN.FT.
SUPERSTRUCTURE					LUMP SUM					110.25		LUMP SUM	11	605
END BENT 1			LUMP SUM	26.3		2977	7	350	7		29			
END BENT 2			LUMP SUM	26.3		2977	7	350	7		29			
TOTAL	LUMP SUM	2	LUMP SUM	52.6	LUMP SUM	5954	14	700	14	110.25	58	LUMP SUM	11	605

PROJECT NO. 17BP.2.R.54

BEAUFORT COUNTY

STATION: 13+13.50 -L-

SHEET 3 OF 3

NORTH CAROLINA PROFESSIONAL SEAL 22005 ENGINEER A. KEITH PASCHAL 9-19-14

STATE OF NORTH CAROLINA
DEPARTMENT OF TRANSPORTATION
RALEIGH

GENERAL DRAWING

FOR BRIDGE OVER FORK SWAMP ON SR 1530 BETWEEN SR 1532 & SR 1528

REVISIONS						SHEET NO.
NO.	BY:	DATE:	NO.	BY:	DATE:	S-3
1			3			TOTAL SHEETS
2			4			14

DRAWN BY : S. STRICKLAND DATE : 4/14
CHECKED BY : P. N. HOLDER DATE : 4/14
DESIGN ENGINEER OF RECORD: A. K. PASCHAL DATE : 4/14

19-SEP-2014 11:18
S:\DPG1\Division2\17BP.2.R.54\Final Plans\17BP.2.R.54_SD_Complete_CS.dgn
kpaschal

LOAD AND RESISTANCE FACTOR RATING (LRFD) SUMMARY FOR PRESTRESSED CONCRETE GIRDERS

LEVEL		VEHICLE	WEIGHT (W) (TONS)	CONTROLLING LOAD RATING	MINIMUM RATING FACTORS (RF)	TONS = W X RF	STRENGTH I LIMIT STATE											SERVICE III LIMIT STATE						COMMENT NUMBER
								MOMENT					SHEAR						MOMENT					
							LIVELOAD FACTORS	DISTRIBUTION FACTORS (DF)	RATING FACTOR	SPAN	GIRDER LOCATION	DISTANCE FROM LEFT END OF SPAN (ft)	DISTRIBUTION FACTORS (DF)	RATING FACTOR	SPAN	GIRDER LOCATION	DISTANCE FROM LEFT END OF SPAN (ft)	LIVELOAD FACTORS	DISTRIBUTION FACTORS (DF)	RATING FACTOR	SPAN	GIRDER LOCATION	DISTANCE FROM LEFT END OF SPAN (ft)	
DESIGN LOAD RATING		HL-93(Inv)	N/A	1	1.055	--	1.75	0.275	1.23	55′	EL	27	0.523	1.23	55′	EL	5.4	0.80	0.275	**1.05**	55′	EL	**27**	
		HL-93(Opr)	N/A	--	1.591	--	1.35	0.275	1.59	55′	EL	27	0.523	1.59	55′	EL	5.4	N/A	--	--	--	--	--	
		HS-20(Inv)	36.000	2	1.322	47.585	1.75	0.275	1.54	55′	EL	27	0.523	1.47	55′	EL	5.4	0.80	0.275	**1.32**	55′	EL	**27**	
		HS-20(Opr)	36.000	--	1.9	68.396	1.35	0.275	1.99	55′	EL	27	0.523	1.9	55′	EL	5.4	N/A	--	--	--	--	--	
LEGAL LOAD RATING	SV	SNSH	13.500	--	2.776	37.476	1.4	0.275	4.04	55′	EL	27	0.523	4.17	55′	EL	5.4	0.80	0.275	2.78	55′	EL	27	
		SNGARBS2	20.000	--	2.155	43.095	1.4	0.275	3.14	55′	EL	27	0.523	3.02	55′	EL	5.4	0.80	0.275	2.15	55′	EL	27	
		SNAGRIS2	22.000	--	2.079	45.734	1.4	0.275	3.03	55′	EL	27	0.523	2.83	55′	EL	5.4	0.80	0.275	2.08	55′	EL	27	
		SNCOTTS3	27.250	--	1.384	37.708	1.4	0.275	2.01	55′	EL	27	0.523	2.09	55′	EL	5.4	0.80	0.275	1.38	55′	EL	27	
		SNAGGRS4	34.925	--	1.189	41.527	1.4	0.275	1.73	55′	EL	27	0.523	1.77	55′	EL	5.4	0.80	0.275	1.19	55′	EL	27	
		SNS5A	35.550	--	1.16	41.255	1.4	0.275	1.69	55′	EL	27	0.523	1.82	55′	EL	5.4	0.80	0.275	1.16	55′	EL	27	
		SNS6A	39.950	--	1.079	43.102	1.4	0.275	1.57	55′	EL	27	0.523	1.68	55′	EL	5.4	0.80	0.275	1.08	55′	EL	27	
		SNS7B	42.000	--	1.028	43.175	1.4	0.275	1.5	55′	EL	27	0.523	1.67	55′	EL	5.4	0.80	0.275	1.03	55′	EL	27	
	TTST	TNAGRIT3	33.000	--	1.32	43.556	1.4	0.275	1.92	55′	EL	27	0.523	1.98	55′	EL	5.4	0.80	0.275	1.32	55′	EL	27	
		TNT4A	33.075	--	1.33	43.979	1.4	0.275	1.94	55′	EL	27	0.523	1.91	55′	EL	5.4	0.80	0.275	1.33	55′	EL	27	
		TNT6A	41.600	--	1.101	45.811	1.4	0.275	1.6	55′	EL	27	0.523	1.83	55′	EL	5.4	0.80	0.275	1.10	55′	EL	27	
		TNT7A	42.000	--	1.114	46.804	1.4	0.275	1.62	55′	EL	27	0.523	1.71	55′	EL	5.4	0.80	0.275	1.11	55′	EL	27	
		TNT7B	42.000	--	1.163	48.848	1.4	0.275	1.69	55′	EL	27	0.523	1.62	55′	EL	5.4	0.80	0.275	1.16	55′	EL	27	
		TNAGRIT4	43.000	--	1.101	47.33	1.4	0.275	1.6	55′	EL	27	0.523	1.56	55′	EL	5.4	0.80	0.275	1.10	55′	EL	27	
		TNAGT5A	45.000	--	1.031	46.405	1.4	0.275	1.5	55′	EL	27	0.523	1.58	55′	EL	5.4	0.80	0.275	1.03	55′	EL	27	
		TNAGT5B	45.000	3	1.013	45.582	1.4	0.275	1.47	55′	EL	27	0.523	1.48	55′	EL	5.4	0.80	0.275	**1.01**	55′	EL	**27**	

LOAD FACTORS:

DESIGN LOAD RATING FACTORS	LIMIT STATE	γ_{DC}	γ_{DW}
	STRENGTH I	1.25	1.50
	SERVICE III	1.00	1.00

NOTES:

MINIMUM RATING FACTORS ARE BASED ON THE STRENGTH I AND SERVICE III LIMIT STATES.

ALLOWABLE STRESSES FOR SERVICE III LIMIT STATE ARE AS REQUIRED FOR DESIGN.

COMMENTS:

1.
2.
3.
4.

CONTROLLING LOAD RATING
1 DESIGN LOAD RATING (HL-93)
2 DESIGN LOAD RATING (HS-20)
3 LEGAL LOAD RATING **
** SEE CHART FOR VEHICLE TYPE
GIRDER LOCATION
I - INTERIOR GIRDER
EL - EXTERIOR LEFT GIRDER
ER - EXTERIOR RIGHT GIRDER

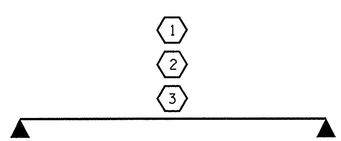

LRFR SUMMARY

FOR SPAN 'A'

PROJECT NO. 17BP.2.R.54

BEAUFORT COUNTY

STATION: 13+13.50 -L-

STATE OF NORTH CAROLINA
DEPARTMENT OF TRANSPORTATION
RALEIGH

STANDARD

LRFR SUMMARY FOR 55′ CORED SLAB UNIT 90° SKEW
(NON-INTERSTATE TRAFFIC)

NORTH CAROLINA PROFESSIONAL SEAL 22005 ENGINEER KEITH PASCHAL
9.19.14

REVISIONS						SHEET NO.
NO.	BY:	DATE:	NO.	BY:	DATE:	S-4
1			3			TOTAL SHEETS
2			4			14

ASSEMBLED BY : S. STRICKLAND DATE : 4/14
CHECKED BY : P. N. HOLDER DATE : 4/14
DRAWN BY : CVC 6/10
CHECKED BY : DNS 6/10

19-SEP-2014 11:18
S:\DPGI\Division2\17BP.2.R.54\Final Plans\17BP.2.R.54_SD_Complete_CS.dgn
kpaschal

STD. NO. 21LRFR1_90S_55L

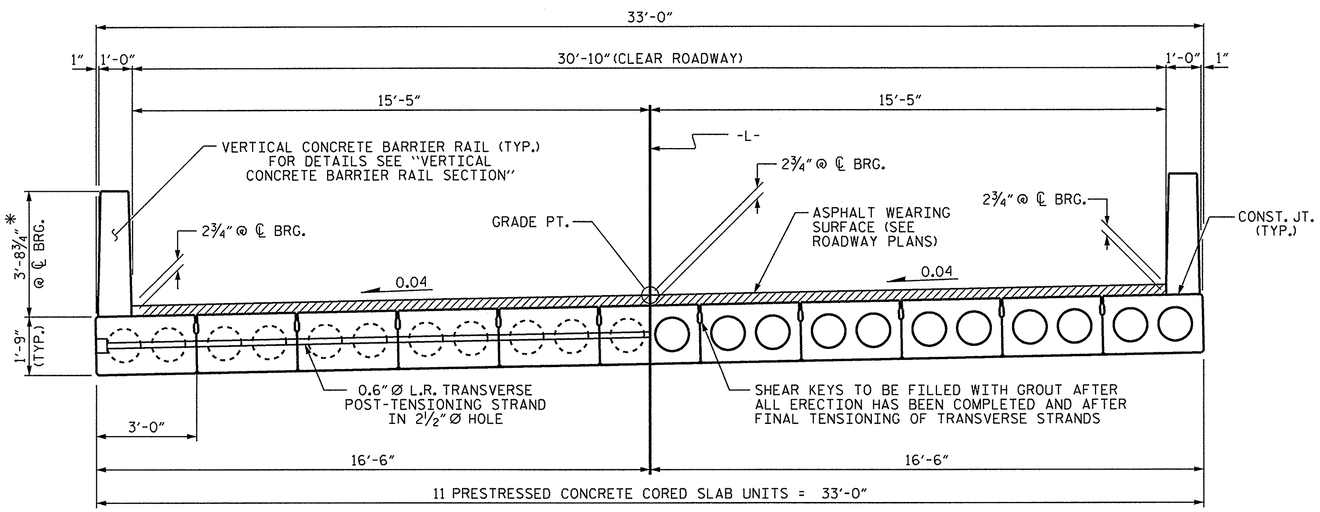

HALF SECTION
AT INTERMEDIATE DIAPHRAGMS

HALF SECTION
THROUGH VOIDS

TYPICAL SECTION

* - THE MAXIMUM BARRIER RAIL HEIGHT AND ASPHALT THICKNESS IS SHOWN. THE HEIGHT OF THE BARRIER RAIL AND ASPHALT THICKNESS VARIES WHILE THE TOP OF THE BARRIER RAIL FOLLOWS THE PROFILE OF THE GUTTERLINE. FOR RAIL HEIGHT DETAILS AND ASPHALT THICKNESS SEE THE "VERTICAL CONCRETE BARRIER RAIL SECTION" DETAIL.

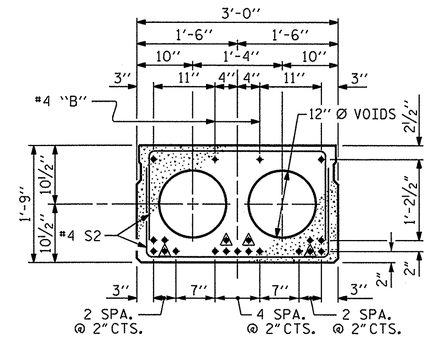

INTERIOR SLAB SECTION
(50' & 55' UNIT)
(19 STRANDS REQUIRED)

0.6" Ø LOW RELAXATION STRAND LAYOUT

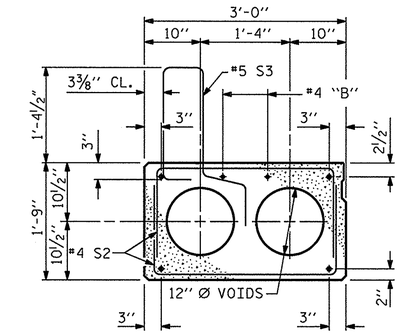

EXT. SLAB SECTION
(FOR PRESTRESSED STRAND LAYOUT, SEE INTERIOR SLAB SECTION.)

▲ BOND SHALL BE BROKEN ON THESE STRANDS FOR A DISTANCE OF 6'-0" FROM END OF CORED SLAB UNIT. SEE STANDARD SPECIFICATIONS, ARTICLE 1078-7.

DEBONDING LEGEND

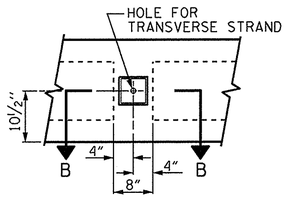

ELEVATION VIEW

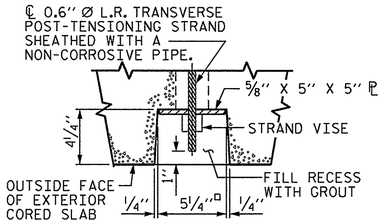

SECTION B-B

GROUTED RECESS AT END OF POST-TENSIONED STRAND OF CORED SLABS

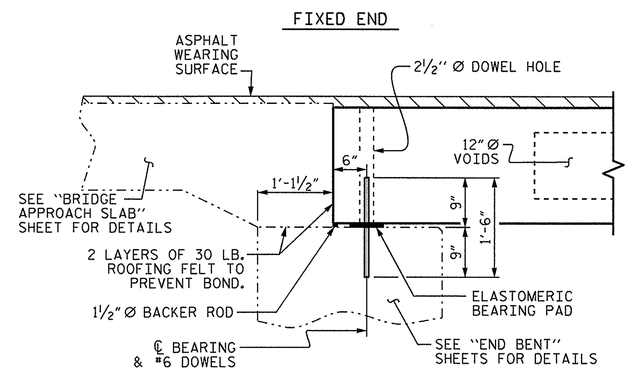

SECTION AT END BENT

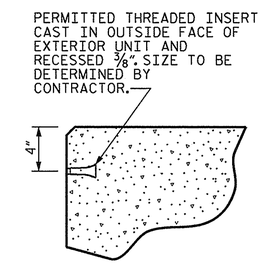

THREADED INSERT DETAIL

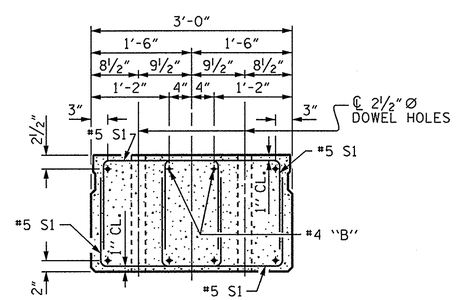

END ELEVATION

SHOWING PLACEMENT OF DOUBLE STIRRUPS AND LOCATION OF DOWEL HOLES. (STRAND LAYOUT NOT SHOWN.) INTERIOR SLAB UNIT SHOWN-EXTERIOR SLAB UNIT SIMILAR EXCEPT SHEAR KEY LOCATION.

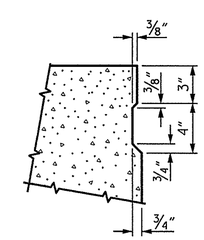

SHEAR KEY DETAIL

NOTE: OMIT SHEAR KEY ON OUTSIDE FACE OF EXTERIOR CORED SLABS.

PROJECT NO. 17BP.2.R.54
BEAUFORT COUNTY
STATION: 13+13.50 -L-

SHEET 1 OF 3

STATE OF NORTH CAROLINA
DEPARTMENT OF TRANSPORTATION
RALEIGH

STANDARD
3'-0" X 1'-9"
PRESTRESSED CONCRETE CORED SLAB UNIT
90° SKEW

NORTH CAROLINA PROFESSIONAL SEAL 22008 ENGINEER KEITH PASCHAL
9.19.14

REVISIONS						SHEET NO.
NO.	BY:	DATE:	NO.	BY:	DATE:	S-5
1			3			TOTAL SHEETS
2			4			14

ASSEMBLED BY : S. STRICKLAND	DATE : 4/14		
CHECKED BY : P. N. HOLDER	DATE : 4/14		
DRAWN BY : DGE	5/09	REV. 12/11	MAA/AAC
CHECKED BY : BCH	6/09	REV. 8/14	MAA/TMG

STD. NO. 21" PCS2_33_90S

19-SEP-2014 11:18
S:\DPG1\Division2\17BP.2.R.54\Final Plans\17BP.2.R.54_SD_Complete_CS.dgn
kpaschal

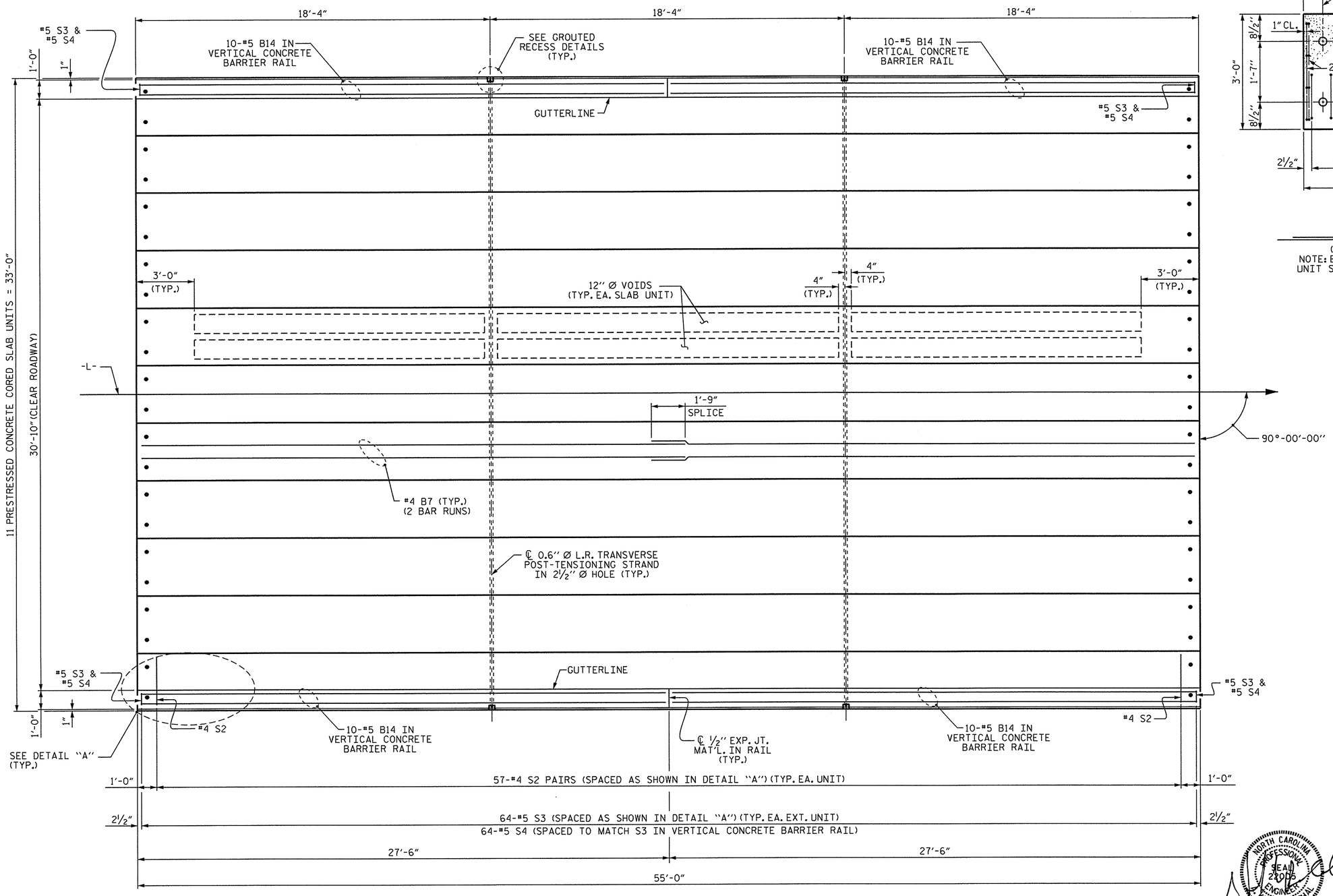

PLAN OF UNIT

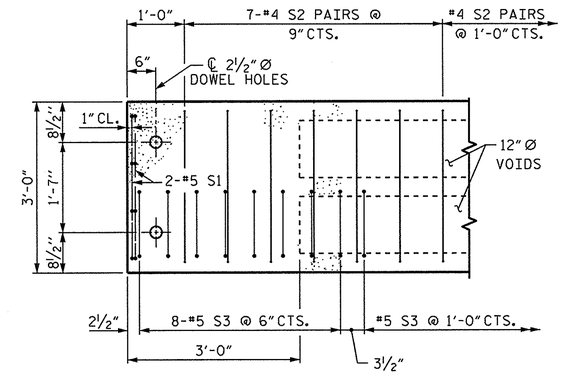

DETAIL "A"

(TYPICAL EACH END OF UNIT)
NOTE: EXTERIOR UNIT SHOWN - INTERIOR UNIT SIMILAR EXCEPT OMIT #5 S3 BARS.

PROJECT NO. 17BP.2.R.54
BEAUFORT COUNTY
STATION: 13+13.50 -L-

SHEET 2 OF 3

STATE OF NORTH CAROLINA
DEPARTMENT OF TRANSPORTATION
RALEIGH

PLAN OF 55' UNIT
30'-10" CLEAR ROADWAY
90° SKEW

NORTH CAROLINA PROFESSIONAL SEAL 22005 ENGINEER KEITH PASCHAL
9-19-14

REVISIONS						SHEET NO.
NO.	BY:	DATE:	NO.	BY:	DATE:	S-6
1			3			TOTAL SHEETS
2			4			14

ASSEMBLED BY : S. STRICKLAND		DATE :	4/14
CHECKED BY : P. N. HOLDER		DATE :	4/14
DRAWN BY : DGE	3/09	REV. 12/5/11	MAA/AAC
CHECKED BY : BCH	3/09	REV. 8/14	MAA/TMG

19-SEP-2014 11:18
S:\DPGI\Division2\17BP.2.R.54\Final Plans\17BP.2.R.54_SD_Complete_CS.dgn
kpaschal

STD. NO. 21" PCS_33_90S_55L

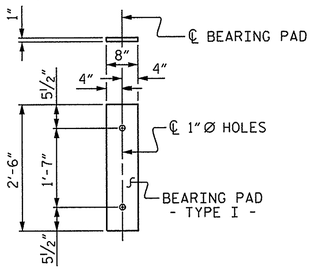

FIXED END
(TYPE I - 22 REQ'D)

ELASTOMERIC BEARING DETAILS

ELASTOMER IN ALL BEARINGS SHALL BE 50 DUROMETER HARDNESS.

GUTTERLINE ASPHALT THICKNESS & RAIL HEIGHT		
30'-10" CLEAR ROADWAY	ASPHALT OVERLAY THICKNESS	RAIL HEIGHT
	@ MID-SPAN	@ MID-SPAN
	SUPERED SECTION	
55' UNITS	1⅝"	3'-7⅝"

BILL OF MATERIAL FOR VERTICAL CONCRETE BARRIER RAIL						
BAR	BARS PER PAIR OF EXTERIOR UNITS	TOTAL NO.	SIZE	TYPE	LENGTH	WEIGHT
	55' UNIT					
✻B14	40	40	#5	STR	27'-1"	1130
✻ S4	128	128	#5	2	7'-2"	957
✻ EPOXY COATED REINFORCING STEEL				LBS.		2087
CLASS AA CONCRETE				CU.YDS.		14.1
TOTAL VERTICAL CONCRETE BARRIER RAIL				LN. FT.		110.25

DEAD LOAD DEFLECTION AND CAMBER	
	3'-0" x 1'-9"
50' & 55' CORED SLAB UNIT	0.6" Ø L.R. STRAND
CAMBER (SLAB ALONE IN PLACE)	1½" ↑
DEFLECTION DUE TO SUPERIMPOSED DEAD LOAD✻✻	⅜" ↓
FINAL CAMBER	1⅛" ↑

✻✻ INCLUDES FUTURE WEARING SURFACE

CORED SLABS REQUIRED			
	NUMBER	LENGTH	TOTAL LENGTH
55' UNIT			
EXTERIOR C.S.	2	55'-0"	110'-0"
INTERIOR C.S.	9	55'-0"	495'-0"
TOTAL	11		605'-0"

CONCRETE RELEASE STRENGTH	
UNIT	PSI
55' UNITS	4900

BAR TYPES

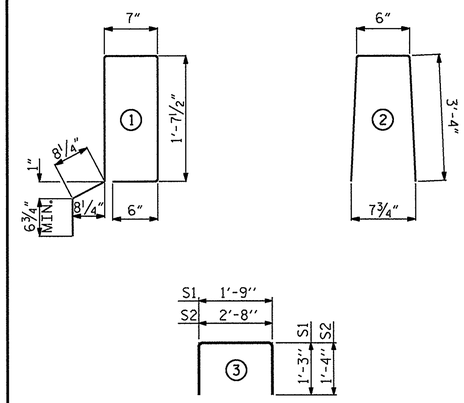

ALL BAR DIMENSIONS ARE OUT TO OUT

BILL OF MATERIAL FOR ONE 55' CORED SLAB UNIT							
				EXTERIOR UNIT		INTERIOR UNIT	
BAR	NUMBER	SIZE	TYPE	LENGTH	WEIGHT	LENGTH	WEIGHT
B7	4	#4	STR	28'-3"	75	28'-3"	75
S1	8	#5	3	4'-3"	35	4'-3"	35
S2	114	#4	3	5'-4"	406	5'-4"	406
✻ S3	64	#5	1	5'-7"	373		
REINFORCING STEEL			LBS.		516		516
✻ EPOXY COATED REINFORCING STEEL			LBS.		373		
6500 P.S.I. CONCRETE			CU. YDS.		7.8		7.8
0.6" Ø L.R. STRANDS			No.		19		19

NOTES

ALL PRESTRESSING STRANDS SHALL BE 7-WIRE LOW RELAXATION GRADE 270 STRANDS AND SHALL CONFORM TO AASHTO M203 EXCEPT FOR SAMPLING REQUIREMENTS WHICH SHALL BE IN ACCORDANCE WITH THE STANDARD SPECIFICATIONS.

ALL REINFORCING STEEL CAST WITH THE CORED SLAB SECTIONS SHALL BE GRADE 60 AND SHALL BE INCLUDED IN THE UNIT PRICE BID FOR PRESTRESSED CONCRETE CORED SLABS.

RECESSES FOR TRANSVERSE STRANDS SHALL BE GROUTED AFTER THE TENSIONING OF THE STRANDS.

THE 2½" Ø DOWEL HOLES AT FIXED ENDS OF SLAB SECTIONS SHALL BE FILLED WITH NON-SHRINK GROUT.

THE BACKER RODS SHALL CONFORM TO THE REQUIREMENTS OF TYPE M BOND BREAKER. SEE SECTION 1028 OF THE STANDARD SPECIFICATIONS.

WHEN CORED SLABS ARE CAST, AN INTERNAL HOLD-DOWN SYSTEM SHALL BE EMPLOYED TO PREVENT VOIDS FROM RISING OR MOVING SIDEWAYS. AT LEAST SIX WEEKS PRIOR TO CASTING CORED SLABS, THE CONTRACTOR SHALL SUBMIT TO THE ENGINEER FOR REVIEW AND COMMENT, DETAILED DRAWINGS OF THE PROPOSED HOLD-DOWN SYSTEM. IN ADDITION TO STRUCTURAL DETAILS, LOCATION AND SPACING OF THE HOLD-DOWNS SHALL BE INDICATED.

ALL REINFORCING STEEL IN THE VERTICAL CONCRETE BARRIER RAIL SHALL BE EPOXY COATED.

PRESTRESSING STRANDS SHALL BE CUT FLUSH WITH THE CORED SLAB UNIT ENDS.

APPLY EPOXY PROTECTIVE COATING TO CORED SLAB UNIT ENDS.

GROOVED CONTRACTION JOINTS, ½" IN DEPTH, SHALL BE TOOLED IN ALL EXPOSED FACES OF THE BARRIER RAIL AND IN ACCORDANCE WITH ARTICLE 825-10(B) OF THE STANDARD SPECIFICATIONS. A CONTRACTION JOINT SHALL BE LOCATED AT EACH THIRD POINT BETWEEN BARRIER RAIL EXPANSION JOINTS. ONLY ONE CONTRACTION JOINT IS REQUIRED AT MIDPOINT OF BARRIER RAIL SEGMENTS LESS THAN 20 FEET IN LENGTH AND NO CONTRACTION JOINTS ARE REQUIRED FOR THOSE SEGMENTS LESS THAN 10 FEET IN LENGTH.

FLAME CUTTING OF THE TRANSVERSE POST-TENSIONING STRAND IS NOT ALLOWED.

THE TRANSFER OF LOAD FROM THE ANCHORAGES TO THE CORED SLAB UNIT SHALL BE DONE WHEN THE CONCRETE HAS REACHED A COMPRESSIVE STRENGTH OF NOT LESS THAN THE REQUIRED STRENGTH SHOWN IN THE "CONCRETE RELEASE STRENGTH" TABLE.

FOR GROUT FOR STRUCTURES, SEE SPECIAL PROVISIONS.

THE PERMITTED THREADED INSERTS ARE DETAILED AS AN OPTION FOR THE CONTRACTOR TO ATTACH FALSEWORK AND FORMWORK DURING CONSTRUCTION.

THE PERMITTED THREADED INSERTS IN THE EXTERIOR UNITS SHALL BE SIZED BY THE CONTRACTOR, SPACED AT 4'-0" CENTERS AND GALVANIZED IN ACCORDANCE WITH SECTION 1076 OF THE STANDARD SPECIFICATIONS. STAINLESS STEEL THREADED INSERTS MAY BE USED AS AN ALTERNATE.

THE PERMITTED THREADED INSERTS SHALL BE GROUTED BY THE CONTRACTOR IMMEDIATELY FOLLOWING REMOVAL OF THE FALSEWORK.

THE COST OF THE PERMITTED THREADED INSERTS SHALL BE INCLUDED IN THE PRICE BID FOR THE PRECAST UNITS.

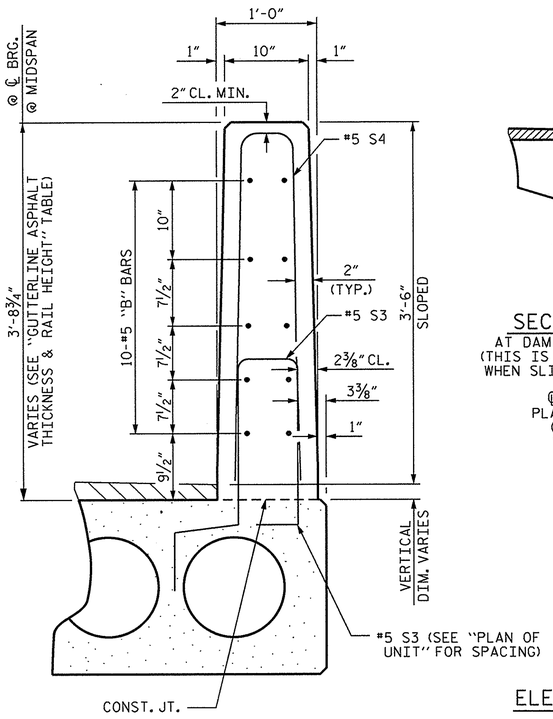

VERTICAL CONCRETE BARRIER RAIL SECTION

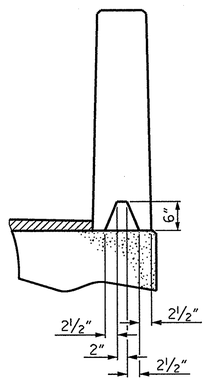

SECTION S-S
AT DAM IN OPEN JOINT
(THIS IS TO BE USED ONLY WHEN SLIP FORM IS USED)

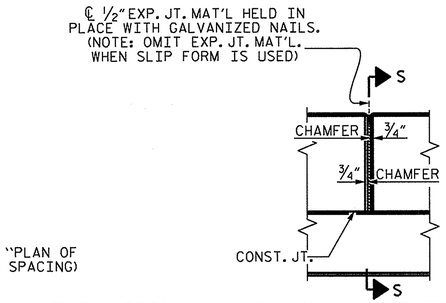

ELEVATION AT EXPANSION JOINTS

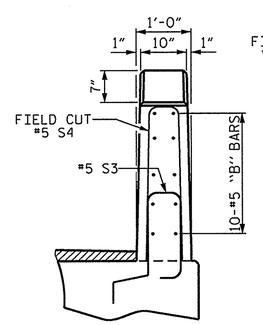

END VIEW

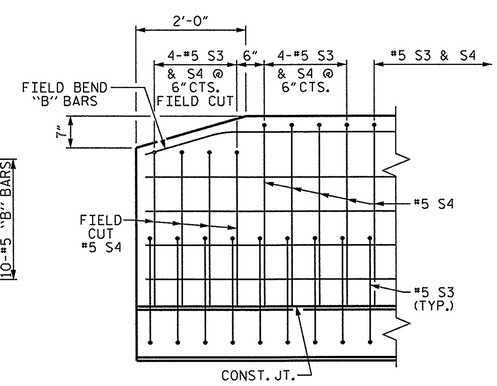

SIDE VIEW

END OF RAIL DETAILS

GRADE 270 STRANDS	
	0.6" Ø L.R.
AREA (SQUARE INCHES)	0.217
ULTIMATE STRENGTH (LBS. PER STRAND)	58,600
APPLIED PRESTRESS (LBS. PER STRAND)	43,950

PROJECT NO. 17BP.2.R.54
BEAUFORT COUNTY
STATION: 13+13.50 -L-

SHEET 3 OF 3

STATE OF NORTH CAROLINA
DEPARTMENT OF TRANSPORTATION
RALEIGH

STANDARD
3'-0" X 1'-9"
PRESTRESSED CONCRETE
CORED SLAB UNIT
90° SKEW

NORTH CAROLINA PROFESSIONAL SEAL 22005 ENGINEER KEITH PASCHAL
9-19-14

REVISIONS						SHEET NO.
NO.	BY:	DATE:	NO.	BY:	DATE:	S-7
1			3			TOTAL SHEETS
2			4			14

STD. NO. 21" PCS3_33_90S

ASSEMBLED BY : S. STRICKLAND	DATE : 4/14		
CHECKED BY : P. N. HOLDER	DATE : 4/14		
DRAWN BY : DGE 5/09	REV. 12/11	MAA/AAC	
CHECKED BY : BCH 6/09	REV. 8/14	MAA/TMG	

19-SEP-2014 11:18
S:\DPG\Division2\17BP.2.R.54\Final Plans\17BP.2.R.54_SD_Complete_CS.dgn
kpaschal

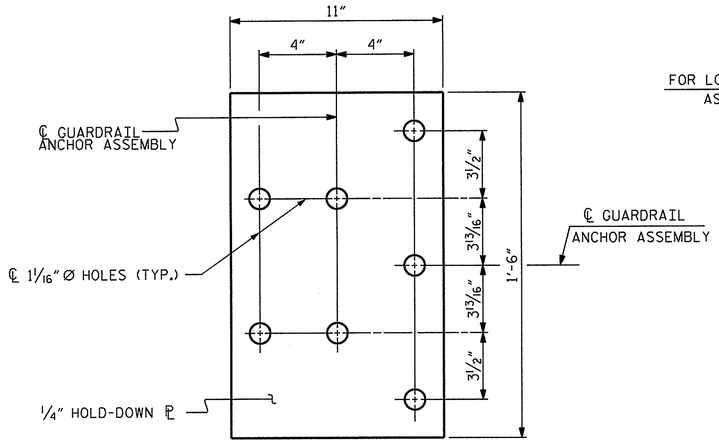

PLAN

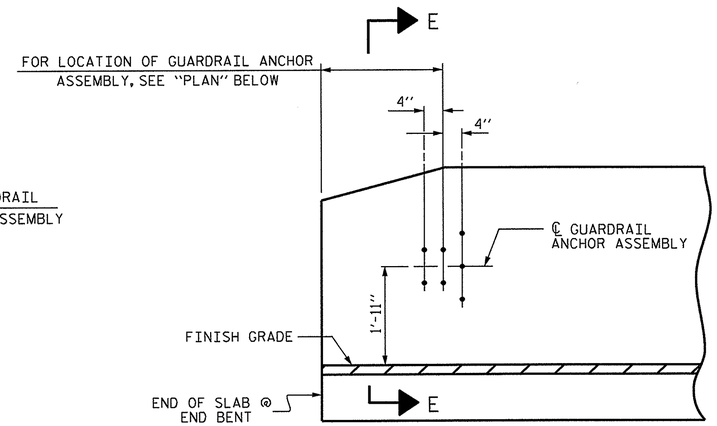

ELEVATION

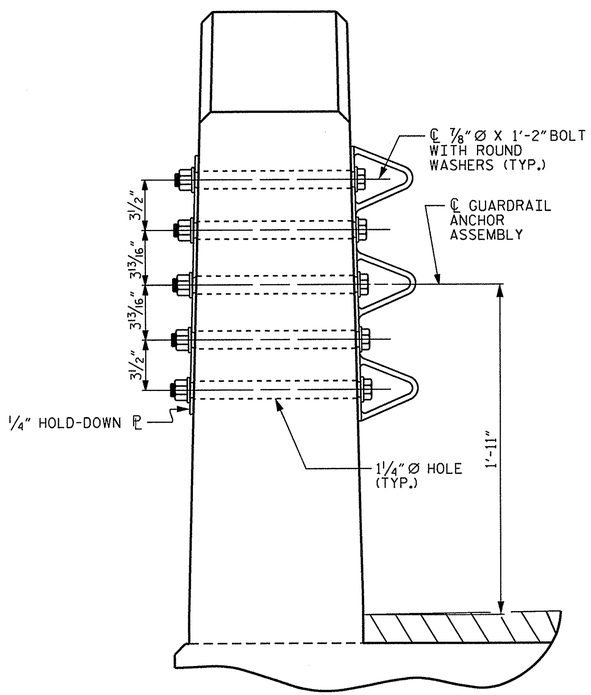

SECTION E-E

GUARDRAIL ANCHOR ASSEMBLY DETAILS

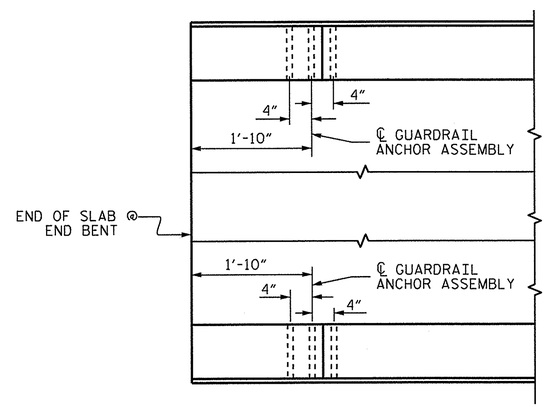

PLAN

LOCATION OF ANCHORS FOR GUARDRAIL

END BENT #1 SHOWN, END BENT #2 SIMILAR.

NOTES

THE GUARDRAIL ANCHOR ASSEMBLY SHALL CONSIST OF A 1/4" HOLD DOWN PLATE AND 7 - 7/8" Ø BOLTS WITH NUTS AND WASHERS.

THE HOLD-DOWN PLATE SHALL CONFORM TO AASHTO M270 GRADE 36. AFTER FABRICATION, THE HOLD-DOWN PLATE SHALL BE HOT-DIP GALVANIZED IN ACCORDANCE WITH AASHTO M111.

BOLTS SHALL CONFORM TO THE REQUIREMENTS OF ASTM A307 AND NUTS SHALL CONFORM TO THE REQUIREMENTS OF AASHTO M291. BOLTS, NUTS AND WASHERS SHALL BE GALVANIZED. (AT THE CONTRACTOR'S OPTION, STAINLESS STEEL BOLTS, NUTS AND WASHERS MAY BE USED AS AN ALTERNATE FOR THE 7/8" Ø GALVANIZED BOLTS, NUTS AND WASHERS. THEY SHALL CONFORM TO OR EXCEED THE MECHANICAL REQUIREMENTS OF ASTM A307. THE USE OF THIS ALTERNATE SHALL BE APPROVED BY THE ENGINEER.)

THE GUARDRAIL ANCHOR ASSEMBLY IS REQUIRED AT ALL POINTS WHERE APPROACH GUARDRAIL IS TO BE ATTACHED TO THE END OF BARRIER RAIL. FOR POINTS OF ATTACHMENT, SEE SKETCH.

AFTER INSTALLATION, THE EXPOSED THREAD OF THE BOLT SHALL BE BURRED WITH A SHARP POINTED TOOL.

THE COST OF THE GUARDRAIL ANCHOR ASSEMBLY SHALL BE INCLUDED IN THE UNIT CONTRACT PRICE BID FOR VERTICAL CONCRETE BARRIER RAIL.

THE VERTICAL REINFORCING BARS MAY BE SHIFTED SLIGHTLY IN THE VERTICAL CONCRETE BARRIER RAIL TO CLEAR ASSEMBLY BOLTS.

THE 1 1/4" Ø HOLES SHALL BE FORMED OR DRILLED WITH A CORE BIT. IMPACT TOOLS WILL NOT BE PERMITTED. ANY CONCRETE DAMAGED BY THIS WORK SHALL BE REPAIRED TO THE SATISFACTION OF THE ENGINEER.

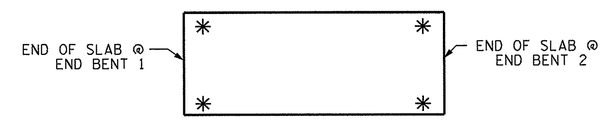

SKETCH SHOWING POINTS OF ATTACHMENT

✳ DENOTES GUARDRAIL ANCHOR ASSEMBLY

PROJECT NO. 17BP.2.R.54
BEAUFORT COUNTY
STATION: 13+13.50 -L-

STATE OF NORTH CAROLINA
DEPARTMENT OF TRANSPORTATION
RALEIGH

STANDARD
GUARDRAIL ANCHORAGE FOR VERTICAL CONCRETE BARRIER RAIL

NORTH CAROLINA PROFESSIONAL SEAL 22005 ENGINEER P. KEITH PASCHAL
9-19-14

REVISIONS						SHEET NO.
NO.	BY:	DATE:	NO.	BY:	DATE:	S-8
1			3			TOTAL SHEETS
2			4			14

ASSEMBLED BY : S. STRICKLAND	DATE : 4/14		
CHECKED BY : P. N. HOLDER	DATE : 4/14		
DRAWN BY : MAA 5/10	REV. 10/1/11	MAA/GM	
CHECKED BY : GM 5/10	REV. 12/5/11	MAA/GM	
	REV. 6/13	MAA/GM	

19-SEP-2014 11:18
S:\DPG1\Division2\17BP.2.R.54\Final Plans\17BP.2.R.54_SD_Complete_CS.dgn
kpaschal

(SHT 1) STD. NO. GRA3

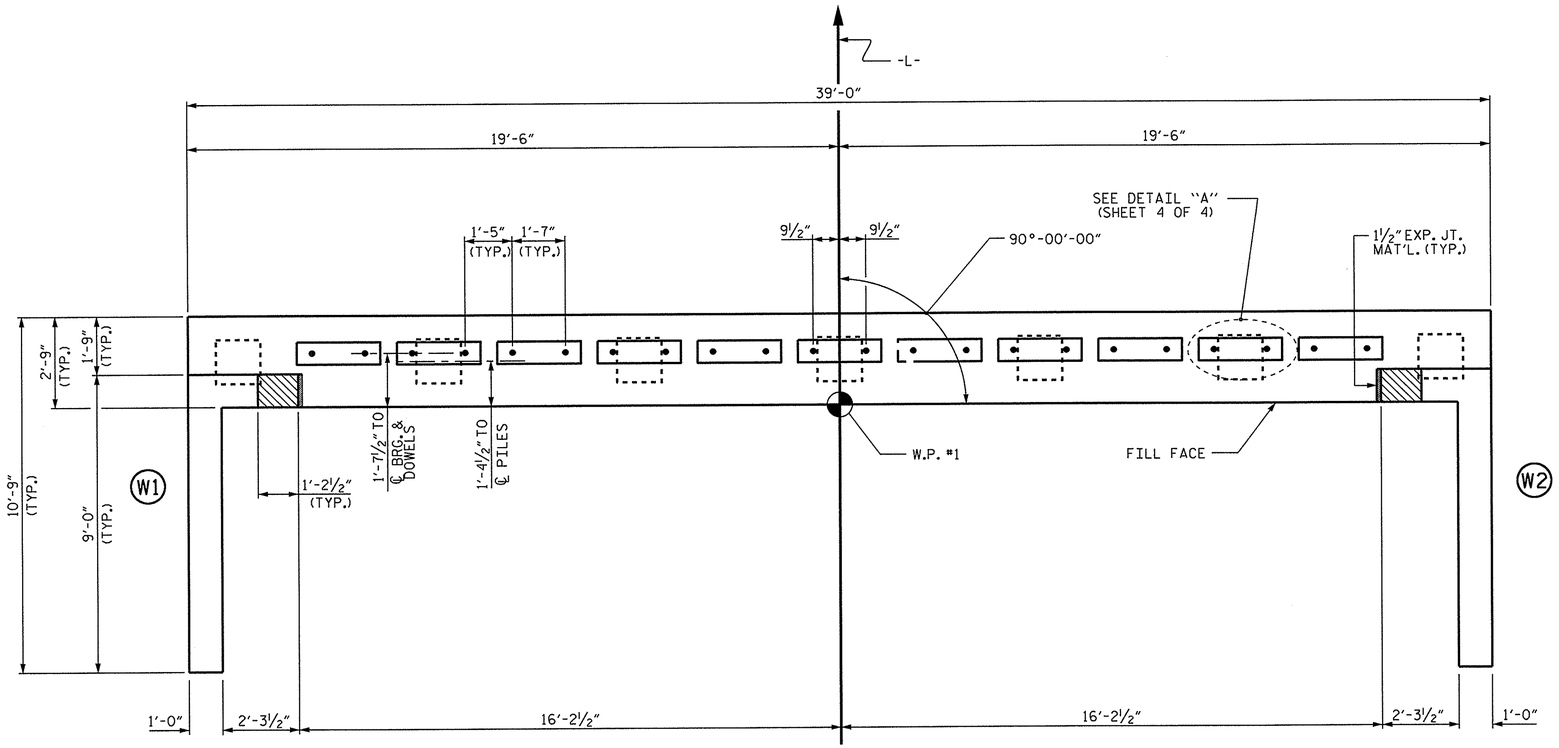

PLAN

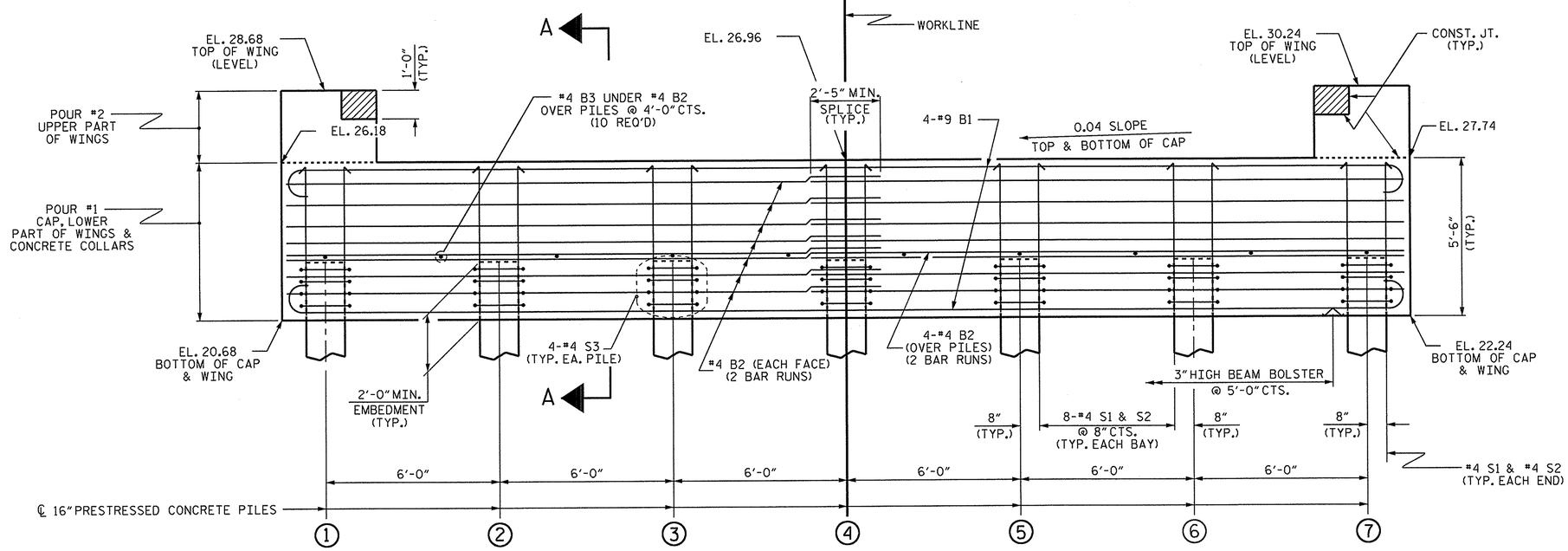

ELEVATION

WINGS NOT SHOWN FOR CLARITY.
FOR SECTION A-A, SEE SHEET 4 OF 4.

NOTES

STIRRUPS IN CAP MAY BE SHIFTED AS NECESSARY TO CLEAR DOWELS.

THE CONCRETE IN THE SHADED AREA OF THE WING SHALL BE POURED AFTER THE VERTICAL CONCRETE BARRIER RAIL IS CAST IF SLIP FORMING IS USED.

FOR WING DETAILS, SEE SHEET 3 OF 4.

INSTALL THE 4"Ø DRAIN PIPE THROUGH THE WING WALL AS REQUIRED. FOR REINFORCED BRIDGE APPROACH FILLS. SEE THE ROADWAY PLANS. REINFORCING STEEL IN THE WING WALL MAY BE SHIFTED AS NECESSARY TO CLEAR THE DRAIN PIPE.

TOP OF PILE ELEVATIONS	
1	22.77
2	23.01
3	23.25
4	23.49
5	23.73
6	23.97
7	24.21

PROJECT NO. 17BP.2.R.54
BEAUFORT COUNTY
STATION: 13+13.50 -L-

SHEET 1 OF 4

STATE OF NORTH CAROLINA
DEPARTMENT OF TRANSPORTATION
RALEIGH

SUBSTRUCTURE

END BENT 1

NORTH CAROLINA PROFESSIONAL SEAL 22006 ENGINEER A. KEITH PASCHAL
9.19.14

ASSEMBLED BY :	S. STRICKLAND	DATE : 4/14
CHECKED BY :	P. N. HOLDER	DATE : 4/14
DESIGN ENGINEER OF RECORD:	A. K. PASCHAL	DATE : 4/14

REVISIONS						SHEET NO.
NO.	BY:	DATE:	NO.	BY:	DATE:	S-9
1			3			TOTAL SHEETS
2			4			14

19-SEP-2014 11:18
S:\DPG1\Division2\17BP.2.R.54\Final Plans\17BP.2.R.54_SD_Complete_CS.dgn
kpaschal

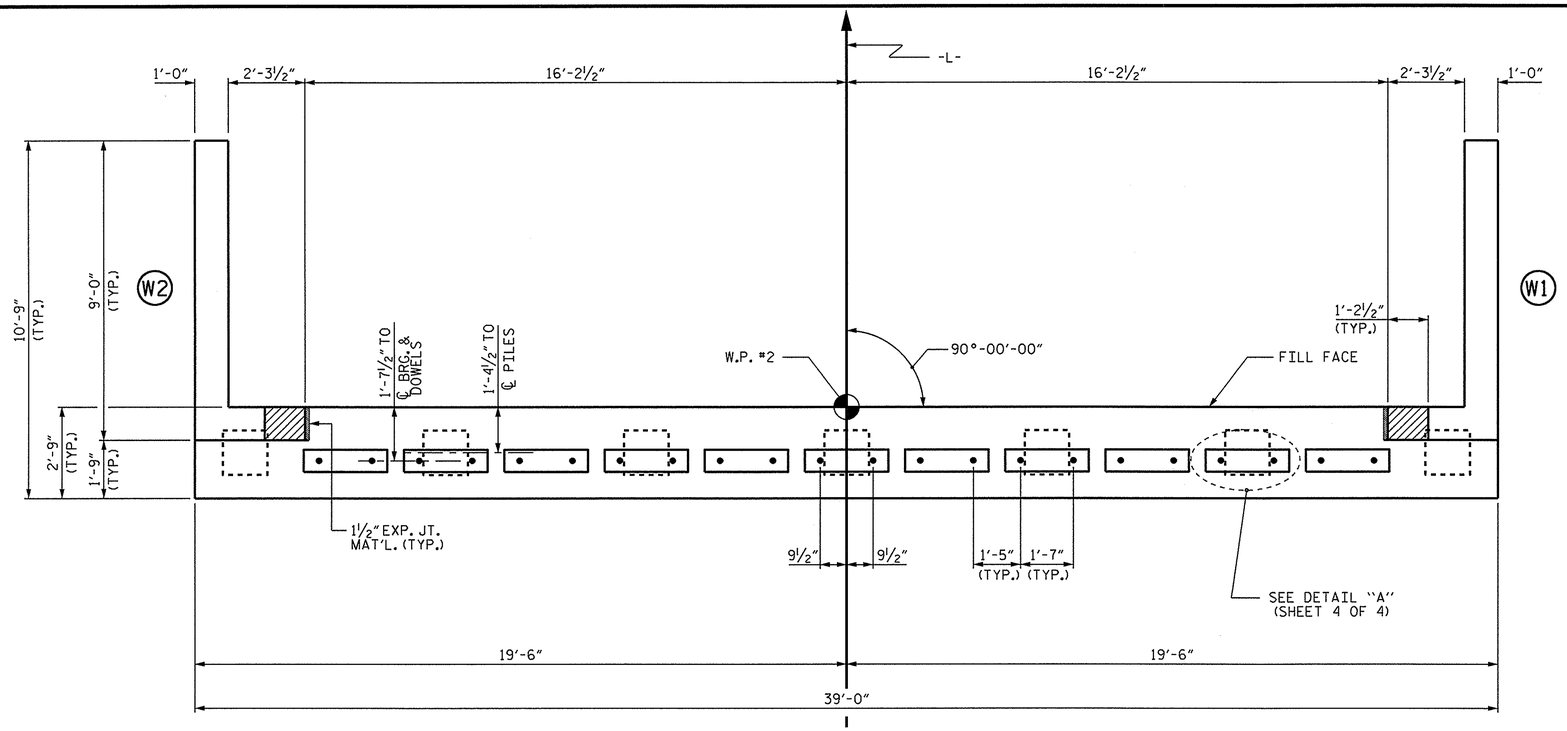

PLAN

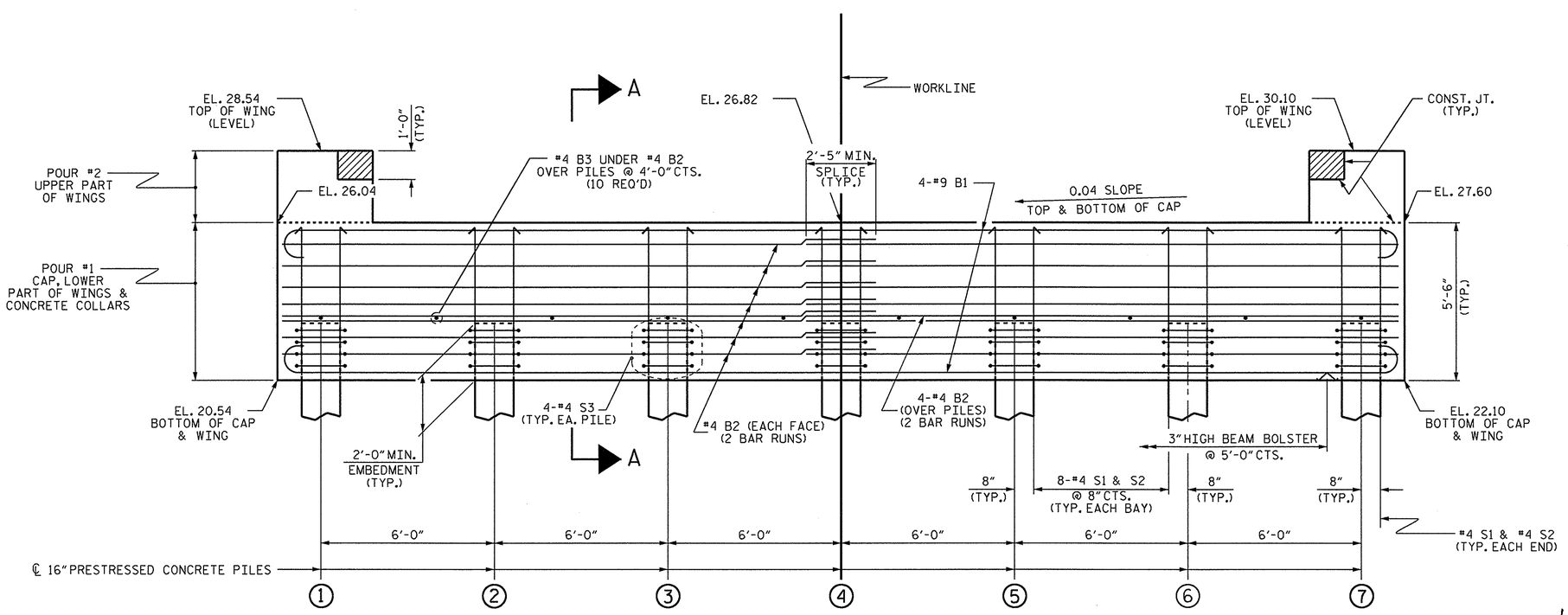

ELEVATION

WINGS NOT SHOWN FOR CLARITY.
FOR SECTION A-A, SEE SHEET 4 OF 4.

NOTES

STIRRUPS IN CAP MAY BE SHIFTED AS NECESSARY TO CLEAR DOWELS.

THE CONCRETE IN THE SHADED AREA OF THE WING SHALL BE POURED AFTER THE VERTICAL CONCRETE BARRIER RAIL ISCAST IF SLIP FORMING IS USED.

FOR WING DETAILS, SEE SHEET 3 OF 4.

INSTALL THE 4"Ø DRAIN PIPE THROUGH THE WING WALL AS REQUIRED. FOR REINFORCED BRIDGE APPROACH FILLS. SEE THE ROADWAY PLANS. REINFORCING STEEL IN THE WING WALL MAY BE SHIFTED AS NECESSARY TO CLEAR THE DRAIN PIPE.

TOP OF PILE ELEVATIONS	
1	22.63
2	22.87
3	23.11
4	23.35
5	23.59
6	23.83
7	24.07

PROJECT NO. 17BP.2.R.54
BEAUFORT COUNTY
STATION: 13+13.50 -L-

SHEET 2 OF 4

STATE OF NORTH CAROLINA
DEPARTMENT OF TRANSPORTATION
RALEIGH

SUBSTRUCTURE

END BENT 2

NORTH CAROLINA PROFESSIONAL SEAL 22005 ENGINEER KEITH PASCHAL
9.19.14

ASSEMBLED BY :	S. STRICKLAND	DATE : 4/14
CHECKED BY :	P. N. HOLDER	4/14
DESIGN ENGINEER OF RECORD:	A. K. PASCHAL	DATE : 4/14

REVISIONS								SHEET NO.
NO.	BY:	DATE:	NO.	BY:	DATE:			S-10
1			3					TOTAL SHEETS
2			4					14

19-SEP-2014 11:18
S:\DPGI\Division2\17BP.2.R.54\Final Plans\17BP.2.R.54_SD_Complete_CS.dgn
kpaschal

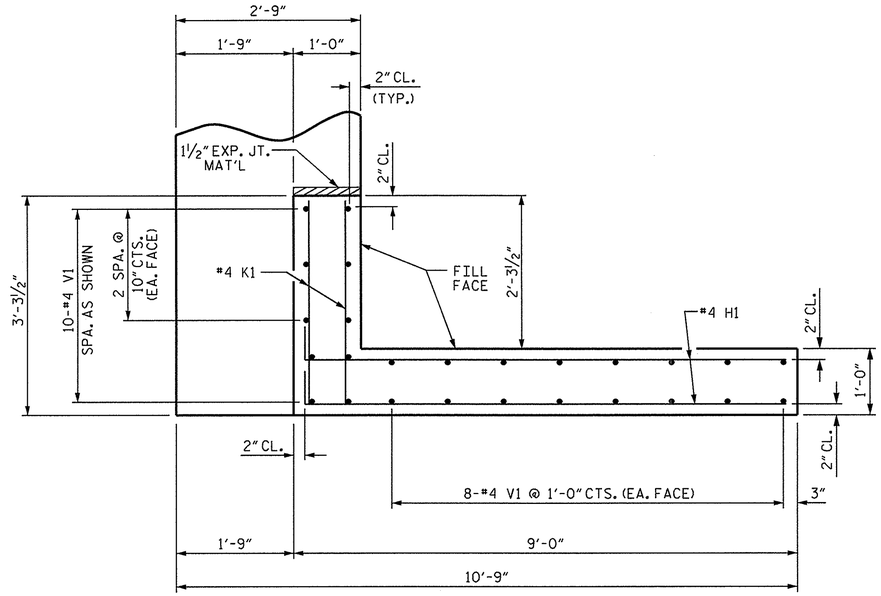

PLAN OF WING (W1)

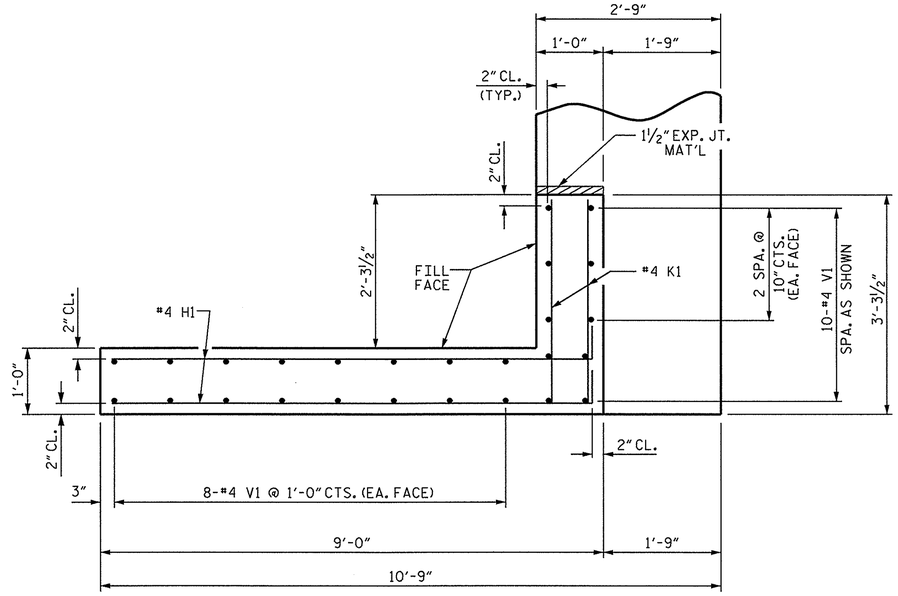

PLAN OF WING (W2)

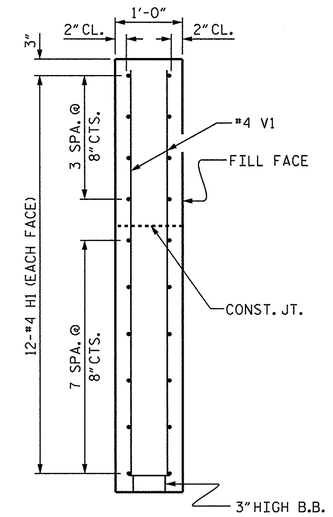

SECTION X-X

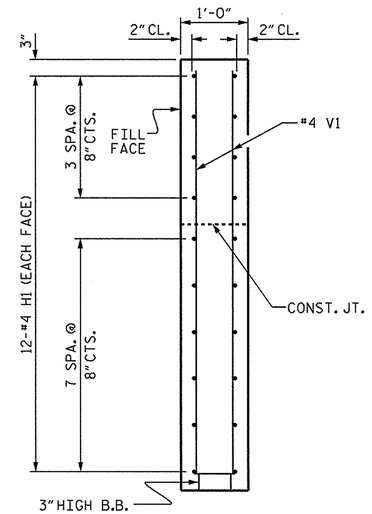

SECTION Y-Y

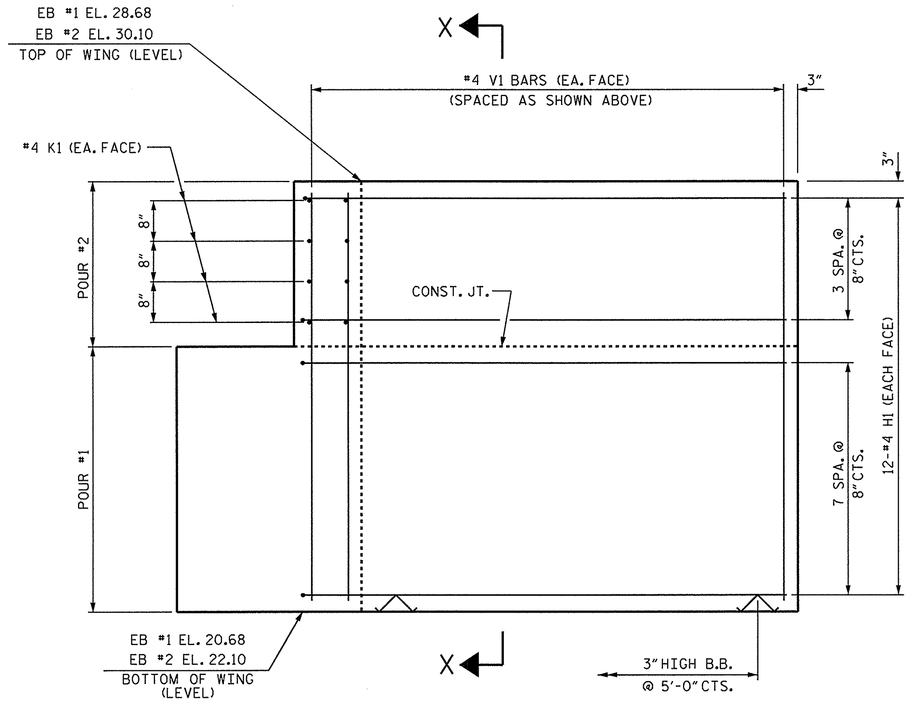

ELEVATION OF WING (W1)

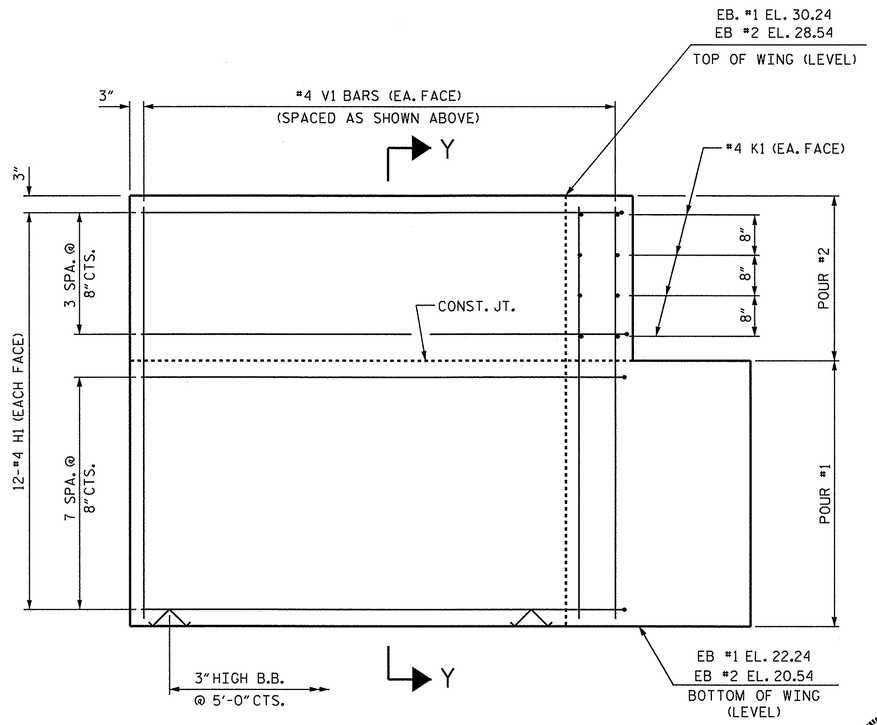

ELEVATION OF WING (W2)

WING DETAILS

NORTH CAROLINA PROFESSIONAL SEAL 22002 ENGINEER A. KEITH PASCHAL
9-19-14

PROJECT NO. 17BP.2.R.54
BEAUFORT COUNTY
STATION: 13+13.50 -L-

SHEET 3 OF 4

STATE OF NORTH CAROLINA
DEPARTMENT OF TRANSPORTATION
RALEIGH

SUBSTRUCTURE
END BENT
WING DETAILS

ASSEMBLED BY : S. STRICKLAND	DATE : 4/14	
CHECKED BY : P. N. HOLDER	DATE : 4/14	
DESIGN ENGINEER OF RECORD: A. K. PASCHAL	DATE : 4/14	

REVISIONS						SHEET NO.
NO.	BY:	DATE:	NO.	BY:	DATE:	S-11
1			3			TOTAL SHEETS
2			4			14

19-SEP-2014 11:18
S:\DPG1\Division2\17BP.2.R.54\Final Plans\17BP.2.R.54_SD_Complete_CS.dgn
kpaschal

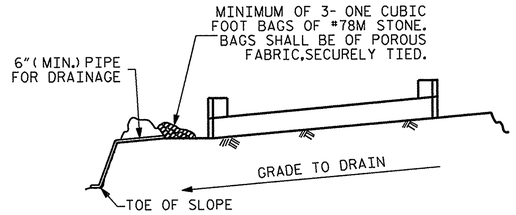

BAGGED STONE AND PIPE SHALL BE PLACED IMMEDIATELY AFTER COMPLETION OF END BENT EXCAVATION. PIPE MAY BE EITHER CONCRETE, CORRUGATED STEEL, CORRUGATED ALUMINUM ALLOY, OR CORRUGATED PLASTIC. PERFORATED PIPE WILL NOT BE ALLOWED.

BAGGED STONE SHALL REMAIN IN PLACE UNTIL THE ENGINEER DIRECTS THAT IT BE REMOVED. THE CONTRACTOR SHALL REMOVE AND DISPOSE OF SILT ACCUMULATIONS AT BAGGED STONE WHEN SO DIRECTED BY THE ENGINEER. BAGS SHALL BE REMOVED AND REPLACED WHENEVER THE ENGINEER DETERMINES THAT THEY HAVE DETERIORATED AND LOST THEIR EFFECTIVENESS.

NO SEPARATE PAYMENT WILL BE MADE FOR THIS WORK AND THE ENTIRE COST OF THIS WORK SHALL BE INCLUDED IN THE UNIT CONTRACT PRICE BID FOR THE SEVERAL PAY ITEMS.

TEMPORARY DRAINAGE AT END BENT

BAR TYPES

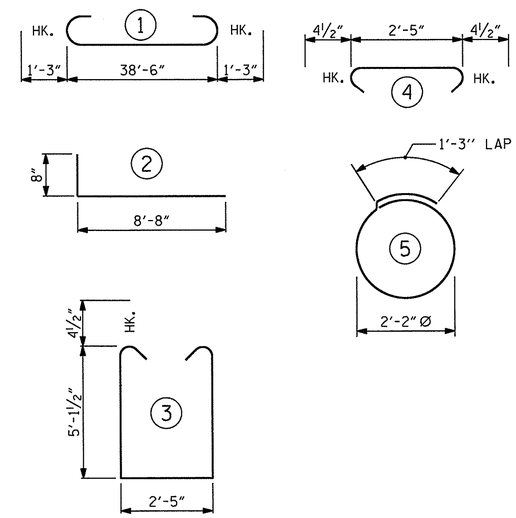

ALL BAR DIMENSIONS ARE OUT TO OUT.

END BENT 1	END BENT 2
16" PRESTRESSED CONCRETE PILES NO: 7 LIN. FT. = 350	16" PRESTRESSED CONCRETE PILES NO: 7 LIN. FT. = 350
PILE REDRIVES EACH NO: 7	PILE REDRIVES EACH NO: 7

BILL OF MATERIAL
FOR ONE END BENT

BAR	NO.	SIZE	TYPE	LENGTH	WEIGHT
B1	8	#9	1	41'-0"	1115
B2	36	#4	STR	20'-7"	495
B3	10	#4	STR	2'-5"	16
D1	22	#6	STR	1'-6"	50
H1	48	#4	2	9'-4"	299
K1	16	#4	STR	2'-11"	31
S1	50	#4	3	13'-5"	448
S2	50	#4	4	3'-2"	106
S3	28	#4	5	8'-1"	151
V1	52	#4	STR	7'-8"	266

REINFORCING STEEL (FOR ONE END BENT) 2977 LBS.

CLASS A CONCRETE BREAKDOWN (FOR ONE END BENT)

POUR #1 CAP & LOWER PART OF WINGS ▲ 24.2 C.Y.

POUR #2 UPPER PART OF WINGS 2.1 C.Y.

TOTAL CLASS A CONCRETE 26.3 C.Y.

▲ CONCRETE DISPLACED BY THE 16" PRESTRESSED CONCRETE PILES HAS BEEN DEDUCTED FROM THE CONCRETE QUANTITY.

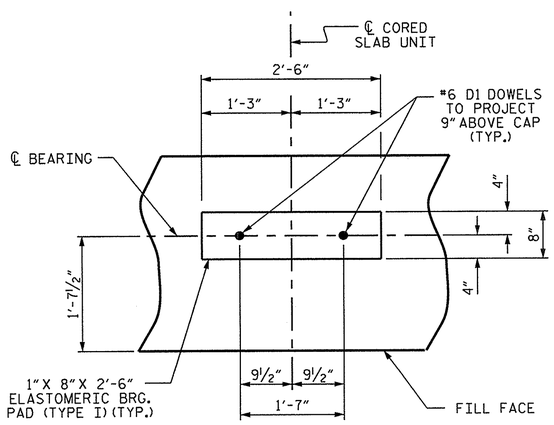

DETAIL "A"

(END BENT 1 SHOWN, END BENT 2 SIMILAR BY ROTATION)

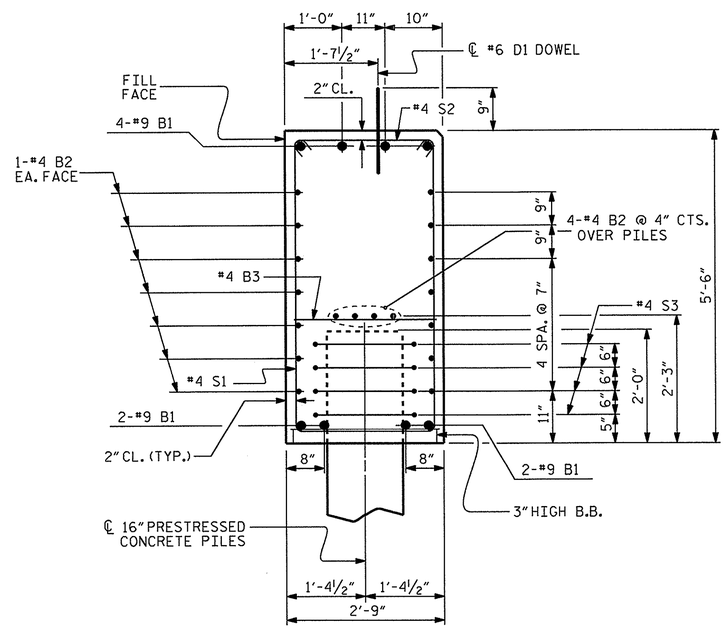

SECTION A-A

PROJECT NO. 17BP.2.R.54
BEAUFORT COUNTY
STATION: 13+13.50 -L-

SHEET 4 OF 4

STATE OF NORTH CAROLINA
DEPARTMENT OF TRANSPORTATION
RALEIGH

SUBSTRUCTURE

END BENT 1 & 2 DETAILS

NORTH CAROLINA PROFESSIONAL SEAL 22008 ENGINEER A. KEITH PASCHAL
9-19-14

ASSEMBLED BY :	S. STRICKLAND	DATE : 4/14	
CHECKED BY :	P. N. HOLDER	DATE : 4/14	
DESIGN ENGINEER OF RECORD:	A. K. PASCHAL	DATE : 4/14	

REVISIONS						SHEET NO.
NO.	BY:	DATE:	NO.	BY:	DATE:	S-12
1			3			TOTAL SHEETS
2			4			14

19-SEP-2014 11:18
S:\DPG1\Division2\17BP.2.R.54\Final Plans\17BP.2.R.54_SD_Complete_CS.dgn
kpaschal

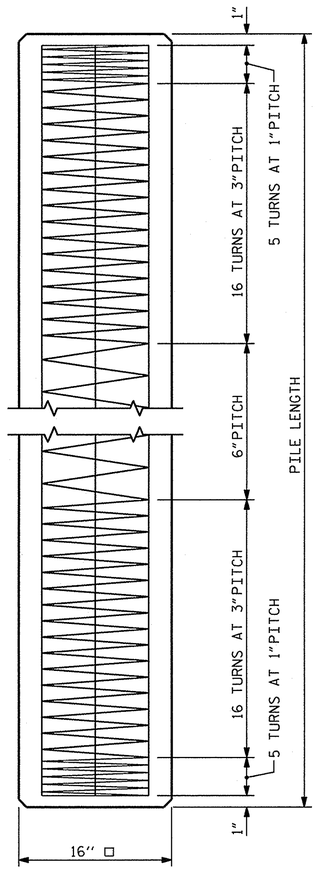

ELEVATION

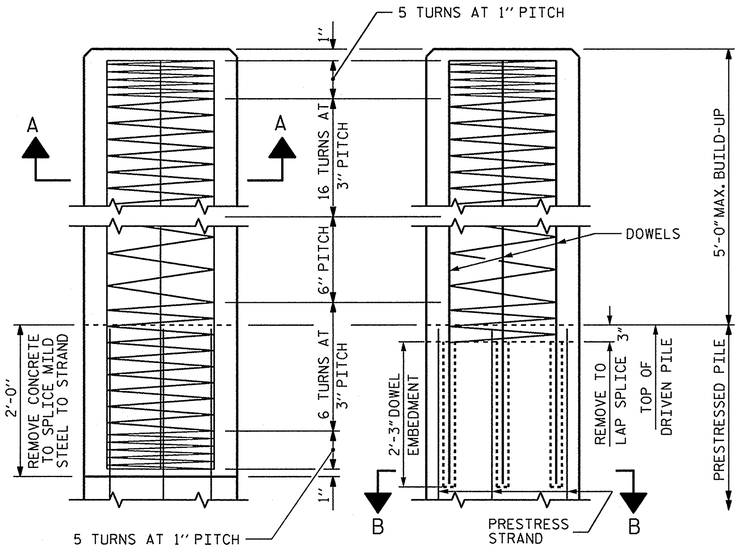

BUILD-UP AND SPIRAL REINFORCING

OPTIONAL BUILD-UP WITH DOWELS

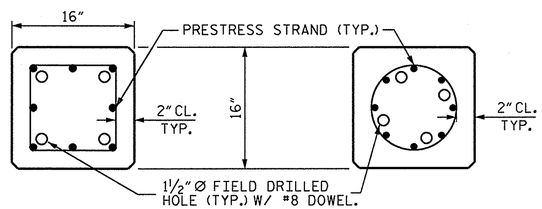

SECTION "B-B"

(AT THE CONTRACTOR'S OPTION, PILE BUILD-UP MAY BE CONSTRUCTED WITH DOWELS.)

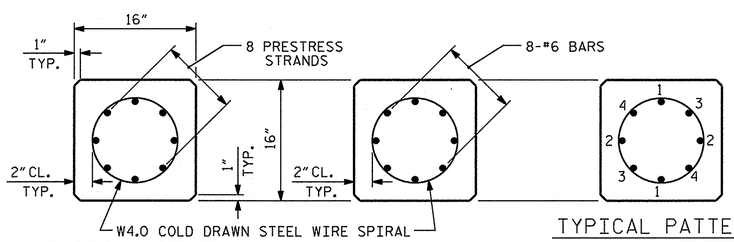

TYPICAL SECTION

SECTION "A-A"

TYPICAL PATTERN FOR BURNING STRANDS

½" OR 0.6" Ø GRADE 270 L.R. PRESTRESS STRANDS

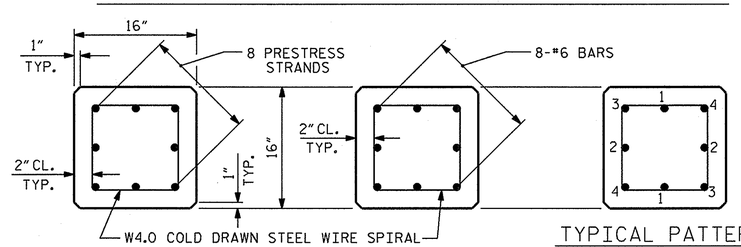

TYPICAL SECTION

SECTION "A-A"

TYPICAL PATTERN FOR BURNING STRANDS

½" OR 0.6" Ø GRADE 270 L.R. PRESTRESS STRANDS

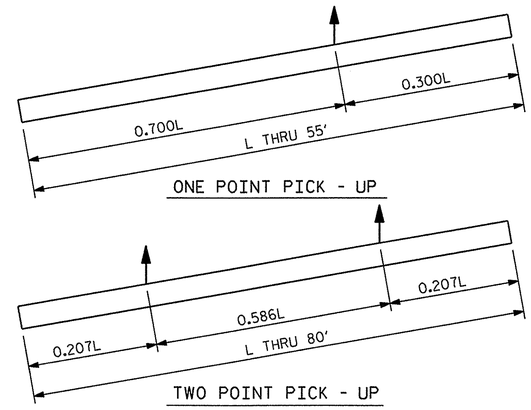

ONE POINT PICK - UP

TWO POINT PICK - UP

PICK - UP POINTS

QUANTITIES FOR ONE 16" PRESTRESSED PILE

LENGTH	CONCRETE CU. YDS.	PILE WT. TONS	ONE POINT PICK-UP 0.300L	ONE POINT PICK-UP 0.700L	TWO POINT PICK-UP 0.207L	TWO POINT PICK-UP 0.586L
25'-0"	1.63	3.31	7'-6"	17'-6"	5'-2"	14'-8"
30'-0"	1.96	3.97	9'-0"	21'-0"	6'-2½"	17'-7"
35'-0"	2.29	4.63	10'-6"	24'-6"	7'-3"	20'-6"
40'-0"	2.61	5.29	12'-0"	28'-0"	8'-3½"	23'-5"
45'-0"	2.94	5.95	13'-6"	31'-6"	9'-4"	26'-4"
50'-0"	3.27	6.61	15'-0"	35'-0"	10'-4"	29'-4"
55'-0"	3.59	7.28	16'-6"	38'-6"	11'-4½"	32'-3"
60'-0"	3.92	7.94			12'-5"	35'-2"
65'-0"	4.25	8.60			13'-5½"	38'-1"
70'-0"	4.57	9.26			14'-6"	41'-0"
75'-0"	4.90	9.92			15'-6½"	43'-11"
80'-0"	5.23	10.58			16'-7"	46'-10"

NOTES

PRESTRESSED CONCRETE STRENGTH : f'c= 7,500 PSI

BUILD-UP CONCRETE STRENGTH : f'c= 7,500 PSI

STRAND DATA:

SIZE	GRADE	AREA	ULTIMATE STRENGTH	APPLIED PRESTRESS FORCE
½"	270 L.R.	0.153	41,300# PER STRAND	30,980# PER STRAND
0.6"	270 L.R.	0.217	58,600# PER STRAND	43,940# PER STRAND

ALL PRESTRESSING STRANDS SHALL BE 7-WIRE LOW-RELAXATION GRADE 270 STRANDS CONFORMING TO AASHTO M203. STRAND SAMPLING REQUIREMENTS SHALL BE IN ACCORDANCE WITH THE STANDARD SPECIFICATIONS.

AT THE CONTRACTOR'S OPTION, ½" OR 0.6" STRANDS MAY BE USED IN EITHER STRAND CONFIGURATION SHOWN IN THE TYPICAL SECTION DETAIL. MIXING OF STRAND SIZE IS NOT ALLOWED.

THE SLIP-FORM METHOD OF CASTING PILES WILL NOT BE PERMITTED.

TRANSFER THE LOAD FROM THE ANCHORAGES TO THE PILE AFTER THE CONCRETE HAS ATTAINED A MINIMUM COMPRESSIVE STRENGTH OF 4,000 PSI.

IF STRAND STRESS IS RELIEVED BY BURNING, THE STRANDS SHALL BE BURNED IN OPPOSITE PAIRS AS INDICATED IN THE TYPICAL PATTERN SHOWN. FOR ANY NUMBER OF STRANDS, BURN IN OPPOSITE PAIRS AND SYMMETRICALLY ABOUT BOTH THE VERTICAL AND HORIZONTAL AXES. STRANDS 1-1 SHALL BE BURNED BEFORE 2-2, ETC. NOT MORE THAN 4 STRANDS, SAY 3-3 AND 4-4, MAY BE BURNED AT ANY ONE SECTION BEFORE THESE SAME PAIRS OF STRANDS ARE BURNED AT BOTH ENDS OF THE BED AND BETWEEN EACH PAIR OF PILES IN THE BED.

PROPOSED DEVICES FOR LIFTING PILES, RECESS DETAILS, AND PATCHING MATERIAL SHALL BE DETAILED IN SHOP DRAWINGS. AFTER ATTACHMENTS HAVE BEEN REMOVED, OPENINGS SHALL BE REPAIRED SUCH THAT THE APPEARANCE OF THE PILE IS UNIFORM.

WHERE CAST-IN-PLACE LIFTING DEVICES ARE NOT USED, PICK-UP POINTS ARE TO BE INDICATED WITH A 2" WIDE BLACK MARK.

DRIVE PILES USING A METHOD APPROVED BY THE ENGINEER, WHEREBY THE HEAD OF THE PILE IS NOT DAMAGED.

DRIVING OF THE BUILT-UP PILE WILL NOT BE PERMITTED UNTIL THE CONCRETE HAS REACHED A COMPRESSIVE STRENGTH OF 5,000 PSI AND UNTIL A PERIOD OF SEVEN DAYS HAS ELAPSED SINCE CASTING OF THE BUILD-UP.

DOWEL INSTALLATION FOR OPTIONAL BUILD-UP

GROUT COMPRESSIVE STRENGTH: f'c= 5,000 PSI

BEFORE DRILLING DOWEL HOLES, REMOVE THE UPPER 3" OF CONCRETE FROM THE TOP OF THE PILE WITHOUT DAMAGE TO THE REINFORCING STEEL. THE REMOVAL PLANE SHOULD BE NORMAL TO THE EDGE OF THE PILE.

DOWEL HOLES SHALL BE POSITIONED TO MAINTAIN ½" CLEAR TO ALL EXISTING PRESTRESSING STRANDS IN THE CONCRETE PILE.

FIELD DRILLED HOLES SHALL BE CLEAN AND FREE OF ANY OBSTRUCTIONS BEFORE GROUTING OF DOWELS. DOWEL BARS SHALL BE INSTALLED AND GROUTED WITH AN APPROVED NON-SHRINK GROUT.

THE SPIRAL REINFORCING IN ALL BUILD-UPS SHALL BE W4.0 COLD DRAWN WIRE WHICH SHALL BE SECURED TO THE LONGITUDINAL REINFORCEMENT TO MAINTAIN PITCH.

THE SPIRAL REINFORCING IN THE BUILD-UP AND THE PRESTRESSED CONCRETE PILE SHALL BE SPLICED BY OVERLAPPING A MIN. OF ONE TURN.

PROJECT NO. 17BP.2.R.54

BEAUFORT COUNTY

STATION: 13+13.50 -L-

NORTH CAROLINA PROFESSIONAL SEAL 22006 ENGINEER A. KEITH PASCHAL

9-19-14

STATE OF NORTH CAROLINA
DEPARTMENT OF TRANSPORTATION
RALEIGH

STANDARD

16" PRESTRESSED CONCRETE PILE

ASSEMBLED BY : A. K. PATEL	DATE : 9/08/2014
CHECKED BY : A. K. PASCHAL	DATE : 9/12/2014
DRAWN BY : RH 9/98	REV. 5/1/06R TLA/GM
CHECKED BY : LES 10/98	REV. 11/30/10 WMC/GM
	REV. 10/1/11 MAA/GM

REVISIONS						SHEET NO.
NO.	BY:	DATE:	NO.	BY:	DATE:	S-13
1			3			TOTAL SHEETS
2			4			14

STD. NO. PCP2

19-SEP-2014 11:18
S:\DPGI\Division2\17BP.2.R.54\Final Plans\17BP.2.R.54_SD_Complete_CS.dgn
kpaschal

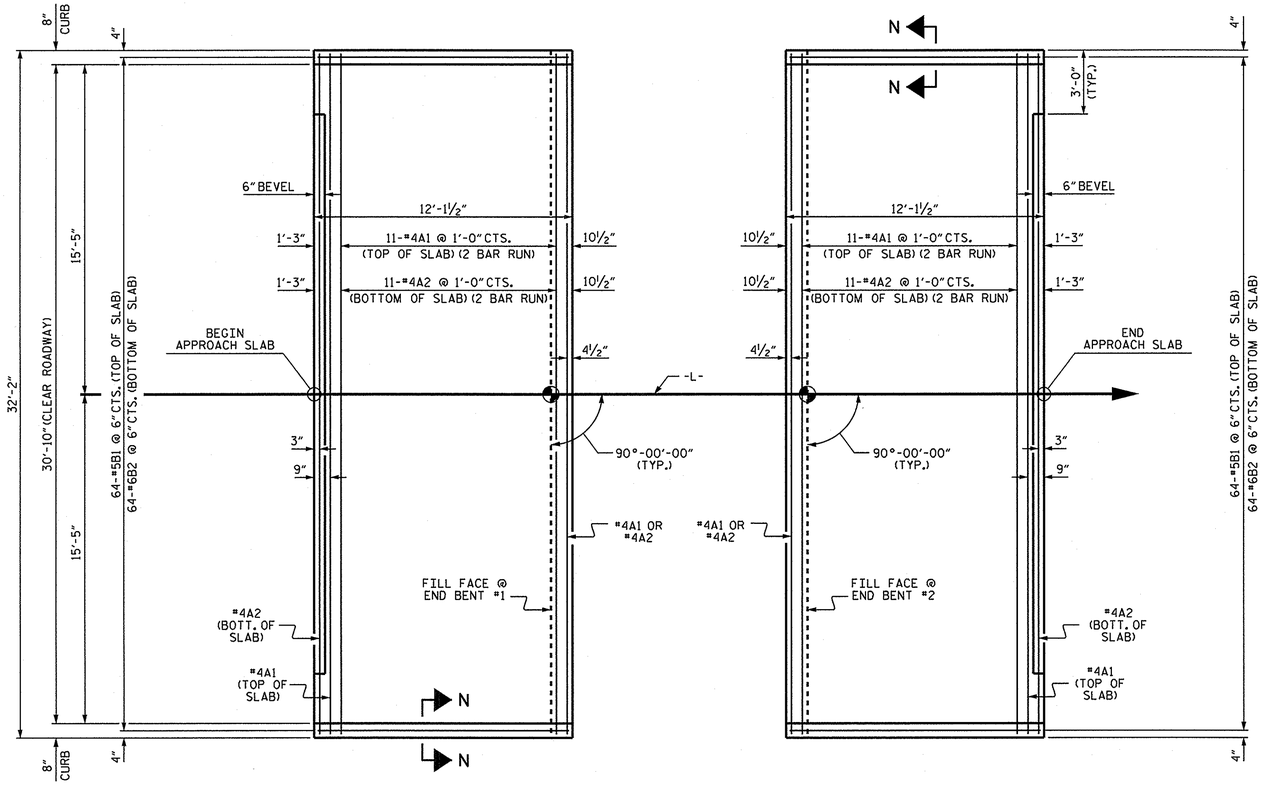

PLAN @ END BENT #1

PLAN @ END BENT #2

DIMENSIONS SHOWN ARE TYPICAL FOR BOTH APPROACH SLABS

NOTES

FOR REINFORCED BRIDGE APPROACH FILL INCLUDING GEOTEXTILE, IMPERMEABLE GEOMEMBRANE, 4" Ø DRAINAGE PIPE, #78M STONE, AND SELECT MATERIAL. SEE ROADWAY PLANS.

AREA BETWEEN THE WINGWALL AND APPROACH SLAB SHALL BE GRADED TO DRAIN THE WATER AWAY FROM THE FILL FACE OF THE BRIDGE AND SHALL BE PAVED. SEE ROADWAY PLANS.

APPROACH SLAB GROOVING IS NOT REQUIRED.

BILL OF MATERIAL

APPROACH SLAB AT EB #1

BAR	NO.	SIZE	TYPE	LENGTH	WEIGHT
* A1	26	#4	STR	16'-11"	294
A2	26	#4	STR	16'-9"	291
* B1	64	#5	STR	11'-2"	745
B2	64	#6	STR	11'-8"	1121
REINFORCING STEEL				LBS.	1412
* EPOXY COATED REINFORCING STEEL				LBS.	1039
CLASS AA CONCRETE				C.Y.	18.5

APPROACH SLAB AT EB #2

BAR	NO.	SIZE	TYPE	LENGTH	WEIGHT
* A1	26	#4	STR	16'-11"	294
A2	26	#4	STR	16'-9"	291
* B1	64	#5	STR	11'-2"	745
B2	64	#6	STR	11'-8"	1121
REINFORCING STEEL				LBS.	1412
* EPOXY COATED REINFORCING STEEL				LBS.	1039
CLASS AA CONCRETE				C.Y.	18.5

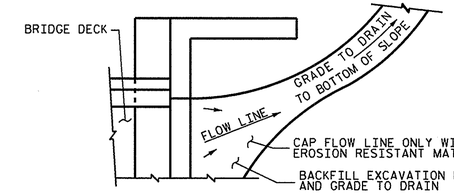

NOTE: IF THE APPROACH SLAB IS NOT CONSTRUCTED IMMEDIATELY AFTER THE BACKFILLING OF THE END BENT EXCAVATION, GRADE TO DRAIN TO THE BOTTOM OF THE SLOPE AND PROVIDE EROSION RESISTANT MATERIAL, SUCH AS FIBERGLASS ROVING OR AS DIRECTED BY THE ENGINEER TO PREVENT SOIL EROSION AND TO PROTECT THE AREA ADJACENT TO THE STRUCTURE. THE CONTRACTOR WILL BE REQUIRED TO REMOVE THESE MATERIALS PRIOR TO CONSTRUCTION OF THE APPROACH SLAB.

TEMPORARY DRAINAGE DETAIL

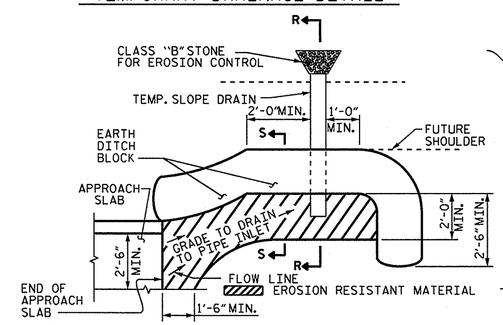

NOTE: IMMEDIATELY AFTER THE CONSTRUCTION OF THE APPROACH SLAB, THE CONTRACTOR SHALL PROVIDE TEMPORARY BERM AND SLOPE DRAIN. CONTRACTOR SHALL GRADE TO PIPE INLET AND PROVIDE EROSION RESISTANT MATERIAL AS SHOWN. THE EROSION RESISTANT MATERIAL SHALL BE EITHER 1) ASPHALT PLANT MIX, TYPE 1 OR TYPE 2, MIN. 2" DEPTH, 2) EROSION CONTROL MAT, OR 3) CONCRETE, AS DIRECTED BY THE ENGINEER. THE SLOPE DRAIN SHALL CONSIST OF A NON-PERFORATED TEMPORARY DRAINAGE PIPE, 12 INCHES IN DIAMETER.

PLAN VIEW

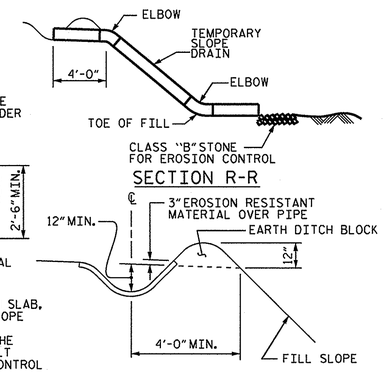

SECTION S-S

TEMPORARY BERM AND SLOPE DRAIN DETAILS

(TO BE USED WHEN SHOULDER BERM GUTTER IS REQUIRED)

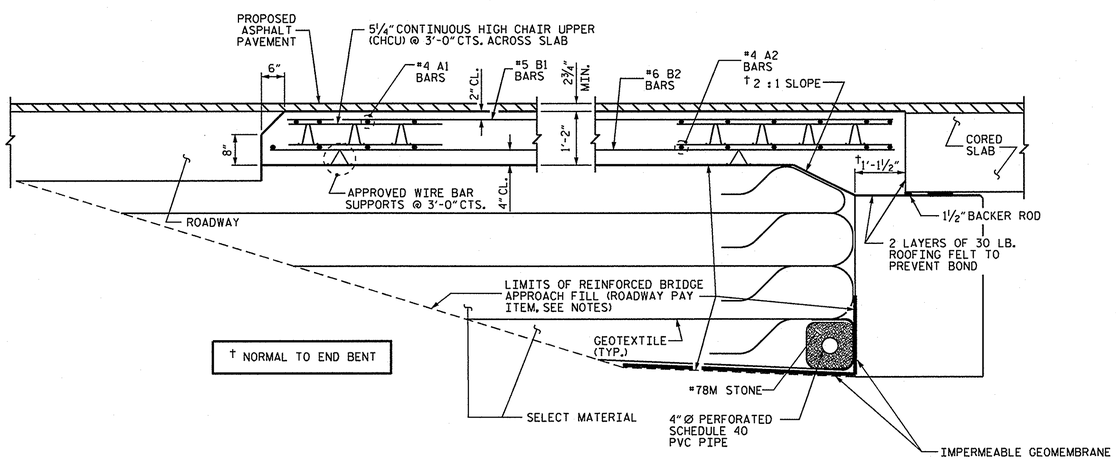

† NORMAL TO END BENT

SECTION THRU SLAB

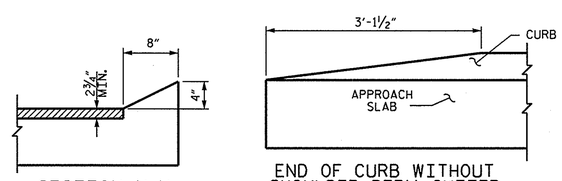

SECTION N-N

END OF CURB WITHOUT SHOULDER BERM GUTTER

CURB DETAILS

SPLICE LENGTHS		
BAR SIZE	EPOXY COATED	UNCOATED
#4	2'-0"	1'-9"
#5	2'-6"	2'-2"
#6	3'-10"	2'-7"

NORTH CAROLINA PROFESSIONAL SEAL 22008 ENGINEER KEITH PASCHAL

9-19-14

PROJECT NO. 17BP.2.R.54

BEAUFORT COUNTY

STATION: 13+13.50 -L-

STATE OF NORTH CAROLINA
DEPARTMENT OF TRANSPORTATION
RALEIGH

STANDARD
BRIDGE APPROACH SLAB
FOR PRESTRESSED CONCRETE
CORED SLAB UNIT

90° SKEW

REVISIONS						SHEET NO.
NO.	BY:	DATE:	NO.	BY:	DATE:	S-14
1			3			TOTAL SHEETS
2			4			14

ASSEMBLED BY : S. STRICKLAND	DATE : 4/14		
CHECKED BY : P. N. HOLDER	DATE : 4/14		
DRAWN BY : SHS/MAA 5-09	REV. 12-11	MAA/AAC	
CHECKED BY : BCH 5-09	REV. 8-14	MAA/TMG	

19-SEP-2014 11:18
S:\DPG1\Division2\17BP.2.R.54\Final Plans\17BP.2.R.54_SD_Complete_CS.dgn
kpaschal

STD. NO. BAS_33_90S

STANDARD NOTES

DESIGN DATA:

SPECIFICATIONS	A.A.S.H.T.O. (CURRENT)
LIVE LOAD	SEE PLANS
IMPACT ALLOWANCE	SEE A.A.S.H.T.O.
STRESS IN EXTREME FIBER OF	
STRUCTURAL STEEL - AASHTO M270 GRADE 36	20,000 LBS. PER SQ. IN.
- AASHTO M270 GRADE 50W	27,000 LBS. PER SQ. IN.
- AASHTO M270 GRADE 50	27,000 LBS. PER SQ. IN.
REINFORCING STEEL IN TENSION GRADE 60	24,000 LBS. PER SQ. IN.
CONCRETE IN COMPRESSION	1,200 LBS. PER SQ. IN.
CONCRETE IN SHEAR	SEE A.A.S.H.T.O.
STRUCTURAL TIMBER - TREATED OR UNTREATED - EXTREME FIBER STRESS	1,800 LBS. PER SQ. IN.
COMPRESSION PERPENDICULAR TO GRAIN OF TIMBER	375 LBS. PER SQ. IN.
EQUIVALENT FLUID PRESSURE OF EARTH	30 LBS. PER CU. FT. (MINIMUM)

MATERIAL AND WORKMANSHIP:

EXCEPT AS MAY OTHERWISE BE SPECIFIED ON PLANS OR IN THE SPECIAL PROVISIONS, ALL MATERIAL AND WORKMANSHIP SHALL BE IN ACCORDANCE WITH THE 2012 "STANDARD SPECIFICATIONS FOR ROADS AND STRUCTURES" OF THE N. C. DEPARTMENT OF TRANSPORTATION.

STEEL SHEET PILING FOR PERMANENT OR TEMPORARY APPLICATIONS SHALL BE HOT ROLLED.

CONCRETE:

UNLESS OTHERWISE REQUIRED ON PLANS, CLASS A CONCRETE SHALL BE USED FOR ALL PORTIONS OF ALL STRUCTURES WITH THE EXCEPTION THAT: CLASS AA CONCRETE SHALL BE USED IN BRIDGE SUPERSTRUCTURES, ABUTMENT BACKWALLS, AND APPROACH SLABS; AND CLASS B CONCRETE SHALL BE USED FOR SLOPE PROTECTION AND RIP RAP.

CONCRETE CHAMFERS:

UNLESS OTHERWISE NOTED ON THE PLANS, ALL EXPOSED CORNERS ON STRUCTURES SHALL BE CHAMFERED 3/4" WITH THE FOLLOWING EXCEPTIONS: TOP CORNERS OF CURBS MAY BE ROUNDED TO 1-1/2" RADIUS WHICH IS BUILT INTO CURB FORMS; CORNERS OF TRANSVERSE FLOOR EXPANSION JOINTS SHALL BE ROUNDED WITH A 1/4" FINISHING TOOL UNLESS OTHERWISE REQUIRED ON PLANS; AND CORNERS OF EXPANSION JOINTS IN THE ROADWAY FACES AND TOPS OF CURBS AND SIDEWALKS SHALL BE ROUNDED TO A 1/4" RADIUS WITH A FINISHING STONE OR TOOL UNLESS OTHERWISE REQUIRED ON PLANS.

DOWELS:

DOWELS WHEN INDICATED ON PLANS AS FOR CULVERT EXTENSIONS, SHALL BE EMBEDDED AT LEAST 12" INTO THE OLD CONCRETE AND GROUTED INTO PLACE WITH 1:2 CEMENT MORTAR.

ALLOWANCE FOR DEAD LOAD DEFLECTION, SETTLEMENT, ETC. IN CASTING SUPERSTRUCTURES:

BRIDGES SHALL BE BUILT ON THE GRADE OR VERTICAL CURVE SHOWN ON PLANS. SLABS, CURBS AND PARAPETS SHALL CONFORM TO THE GRADE OR CURVE.

ALL DIMENSIONS WHICH ARE GIVEN IN SECTION AND ARE AFFECTED BY DEAD LOAD DEFLECTIONS ARE DIMENSIONS AT CENTER LINE OF BEARING UNLESS OTHERWISE NOTED ON PLANS. IN SETTING FORMS FOR STEEL BEAM BRIDGES AND PRESTRESSED CONCRETE GIRDER BRIDGES, ADJUSTMENTS SHALL BE MADE DUE TO THE DEAD LOAD DEFLECTIONS FOR THE ELEVATIONS SHOWN. WHERE BLOCKS ARE SHOWN OVER BEAMS FOR BUILDING UP TO THE SLAB, THE VERTICAL DIMENSIONS OF THE BLOCKS SHALL BE ADJUSTED BETWEEN BEARINGS TO COMPENSATE FOR DEAD LOAD DEFLECTIONS, VERTICAL CURVE ORDINATE, AND ACTUAL BEAM CAMBER. WHERE BOTTOM OF SLAB IS IN LINE WITH BOTTOM OF TOP FLANGES, DEPTH OF SLAB BETWEEN BEARINGS SHALL BE ADJUSTED TO COMPENSATE FOR DEAD LOAD DEFLECTION, VERTICAL CURVE ORDINATE, AND ACTUAL BEAM CAMBER.

IN SETTING FALSEWORK AND FORMS FOR REINFORCED CONCRETE SPANS, AN ALLOWANCE SHALL BE MADE FOR DEAD LOAD DEFLECTIONS, SETTLEMENT OF FALSEWORK, AND PERMANENT CAMBER WHICH SHALL BE PROVIDED FOR IN ADDITION TO THE ELEVATIONS SHOWN. AFTER REMOVAL OF THE FALSEWORK, THE FINISHED STRUCTURES SHALL CONFORM TO THE PROFILE AND ELEVATIONS SHOWN ON THE PLANS AND CONSTRUCTION ELEVATIONS FURNISHED BY THE ENGINEER.

DETAILED DRAWINGS FOR FALSEWORK OR FORMS FOR BRIDGE SUPERSTRUCTURE AND ANY STRUCTURE OR PARTS OF A STRUCTURE AS NOTED ON THE PLANS SHALL BE SUBMITTED TO THE ENGINEER FOR APPROVAL BEFORE CONSTRUCTION OF THE FALSEWORK OR FORMS IS STARTED.

REINFORCING STEEL:

ALL REINFORCING STEEL SHALL BE DEFORMED. DIMENSIONS RELATIVE TO PLACEMENT OF REINFORCING ARE TO CENTERS OF BARS UNLESS OTHERWISE INDICATED IN THE PLANS. DIMENSIONS ON BAR DETAILS ARE TO CENTERS OF BARS OR ARE OUT TO OUT AS INDICATED ON PLANS.

WIRE BAR SUPPORTS SHALL BE PROVIDED FOR REINFORCING STEEL WHERE INDICATED ON THE PLANS. WHEN BAR SUPPORT PIECES ARE PLACED IN CONTINUOUS LINES, THEY SHALL BE SO PLACED THAT THE ENDS OF THE SUPPORTING WIRES SHALL BE LAPPED TO LOCK LEGS ON ADJOINING PIECES.

STRUCTURAL STEEL:

AT THE CONTRACTOR'S OPTION, HE MAY SUBSTITUTE 7/8" Ø SHEAR STUDS FOR THE 3/4" Ø STUDS SPECIFIED ON THE PLANS. THIS SUBSTITUTION SHALL BE MADE AT THE RATE OF 3 - 7/8" Ø STUDS FOR 4 - 3/4" Ø STUDS, AND STUD SPACING CHANGES SHALL BE MADE AS NECESSARY TO PROVIDE THE SAME EQUIVALENT NUMBER OF 7/8" Ø STUDS ALONG THE BEAM AS SHOWN FOR 3/4" Ø STUDS BASED ON THE RATIO OF 3 - 7/8" Ø STUDS FOR 4 - 3/4" Ø STUDS. STUDS OF THE LENGTH SPECIFIED ON THE PLANS MUST BE PROVIDED. THE MAXIMUM SPACING SHALL BE 2'-0".

EXCEPT AT THE INTERIOR SUPPORTS OF CONTINUOUS BEAMS WHERE THE COVER PLATE IS IN CONTACT WITH BEARING PLATE, THE CONTRACTOR MAY, AT HIS OPTION, SUBSTITUTE FOR THE COVER PLATES DESIGNATED ON THE PLANS COVER PLATES OF THE EQUIVALENT AREA PROVIDED THESE PLATES ARE AT LEAST 5/16" IN THICKNESS AND DO NOT EXCEED A WIDTH EQUAL TO THE FLANGE WIDTH LESS 2" OR A THICKNESS EQUAL TO 2 TIMES THE FLANGE THICKNESS. THE SIZE OF FILLET WELDS SHALL CONFORM TO THE REQUIREMENTS OF THE CURRENT ANSI/AASHTO/AWS "BRIDGE WELDING CODE". ELECTROSLAG WELDING WILL NOT BE PERMITTED.

WITH THE SOLE EXCEPTION OF EDGES AT SURFACES WHICH BEAR ON OTHER SURFACES, ALL SHARP EDGES AND ENDS OF SHAPES AND PLATES SHALL BE SLIGHTLY ROUNDED BY SUITABLE MEANS TO A RADIUS OF APPROXIMATELY 1/16 INCH OR EQUIVALENT FLAT SURFACE AT A SUITABLE ANGLE PRIOR TO PAINTING, GALVANIZING, OR METALLIZING.

HANDRAILS AND POSTS:

METAL STANDARDS AND FACES OF THE CONCRETE END POSTS FOR THE METAL RAIL SHALL BE SET NORMAL TO THE GRADE OF THE CURB, UNLESS OTHERWISE SHOWN ON PLANS. THE METAL RAIL AND TOPS OF CONCRETE POSTS USED WITH THE ALUMINUM RAIL SHALL BE BUILT PARALLEL TO THE GRADE OF THE CURB.

METAL HANDRAILS SHALL BE IN ACCORDANCE WITH THE PLANS. RAILS SHALL BE AS MANUFACTURED FOR BRIDGE RAILING. CASTINGS SHALL BE OF A UNIFORM APPEARANCE. FINS AND OTHER DEFORMATIONS RESULTING FROM CASTING OR OTHERWISE SHALL BE REMOVED IN A MANNER SO THAT A UNIFORM COLORING OF THE COMPLETED CASTING SHALL BE OBTAINED. CASTINGS WITH DISCOLORATIONS OR OF NON-UNIFORM COLORING WILL NOT BE ACCEPTED. CERTIFIED MILL REPORTS ARE REQUIRED FOR METAL RAILS AND POSTS.

SPECIAL NOTES:

GENERALLY, IN CASE OF DISCREPANCY, THIS STANDARD SHEET OF NOTES SHALL GOVERN OVER THE SPECIFICATIONS, BUT THE REMAINDER OF THE PLANS SHALL GOVERN OVER NOTES HEREON, AND SPECIAL PROVISIONS SHALL GOVERN OVER ALL. SEE SPECIFICATIONS ARTICLE 105-4.

ENGLISH

JANUARY, 1990