| PROJECT REFERENCE NO. | SHEET NO. |
|---|---|
| W-5329 | 1C |

STATE OF
NORTH CAROLINA
DEPT. OF TRANSPORTATION
DIVISION OF HIGHWAYS
RALEIGH, N.C.

ENGLISH DETAIL DRAWING FOR
**REINFORCED CONCRETE ENDWALL**
SINGLE 54" PIPE 60° OR 120° SKEW

SEE STD. NO. 838.45 FOR GENERAL NOTES.

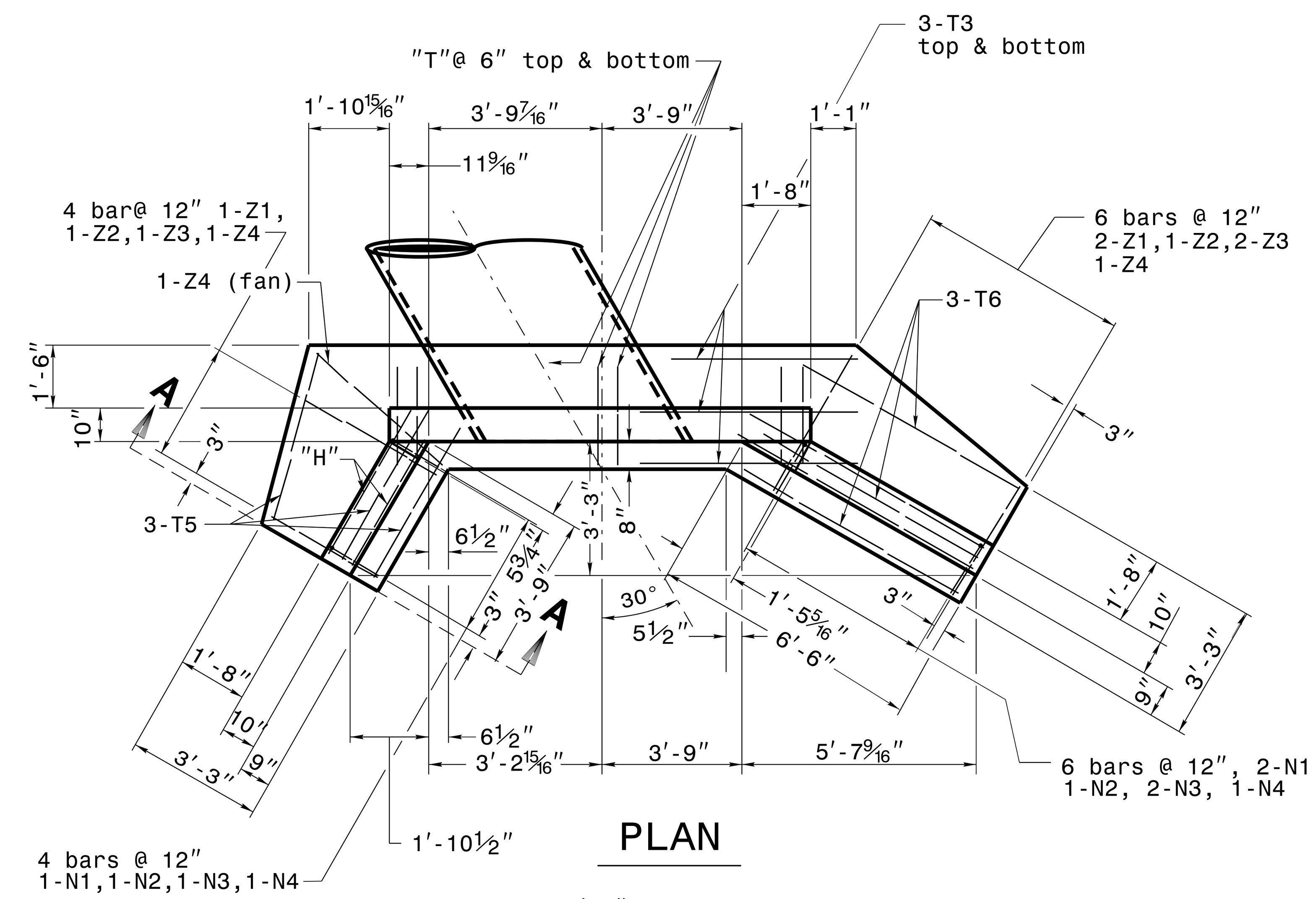


PLAN

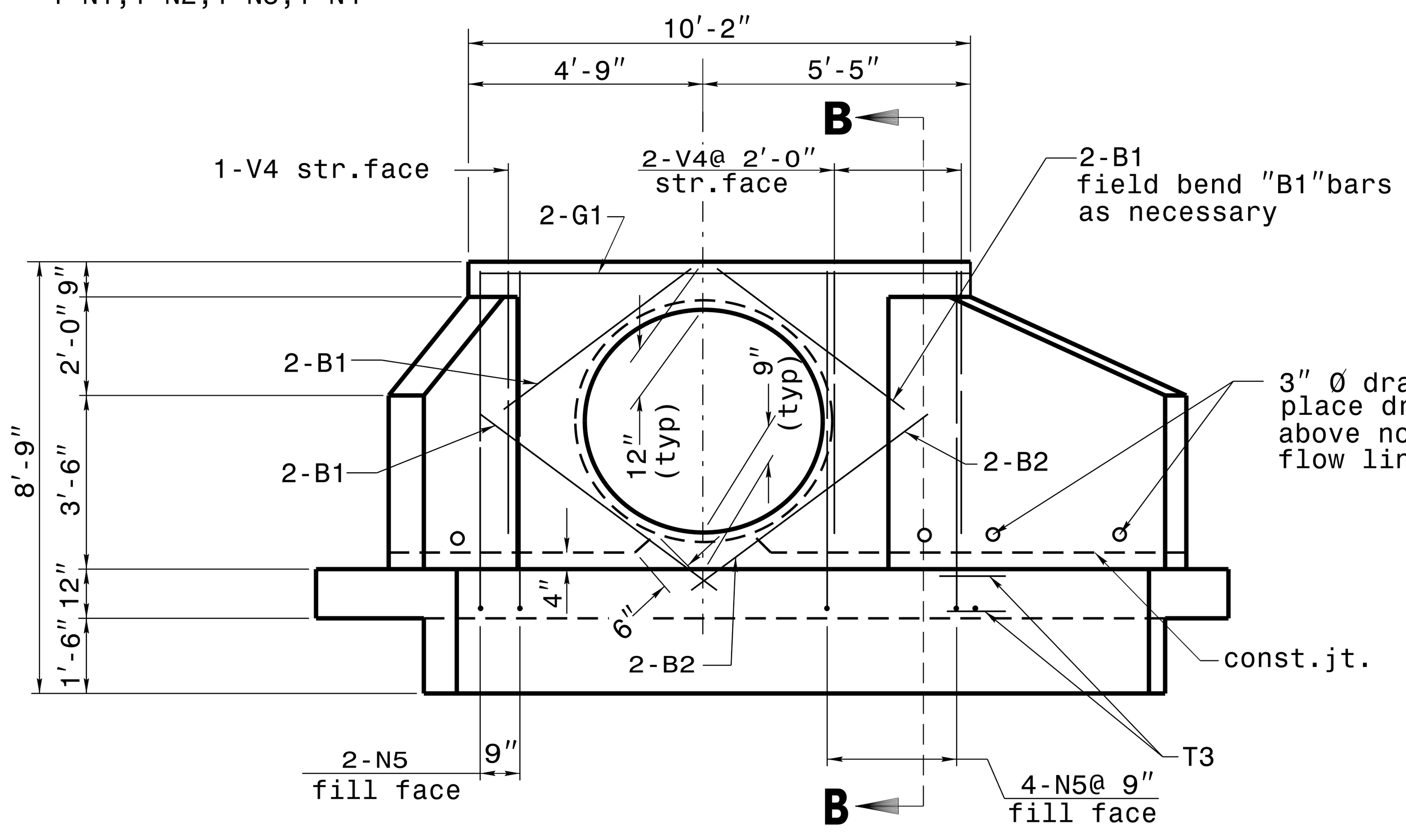


ELEVATION

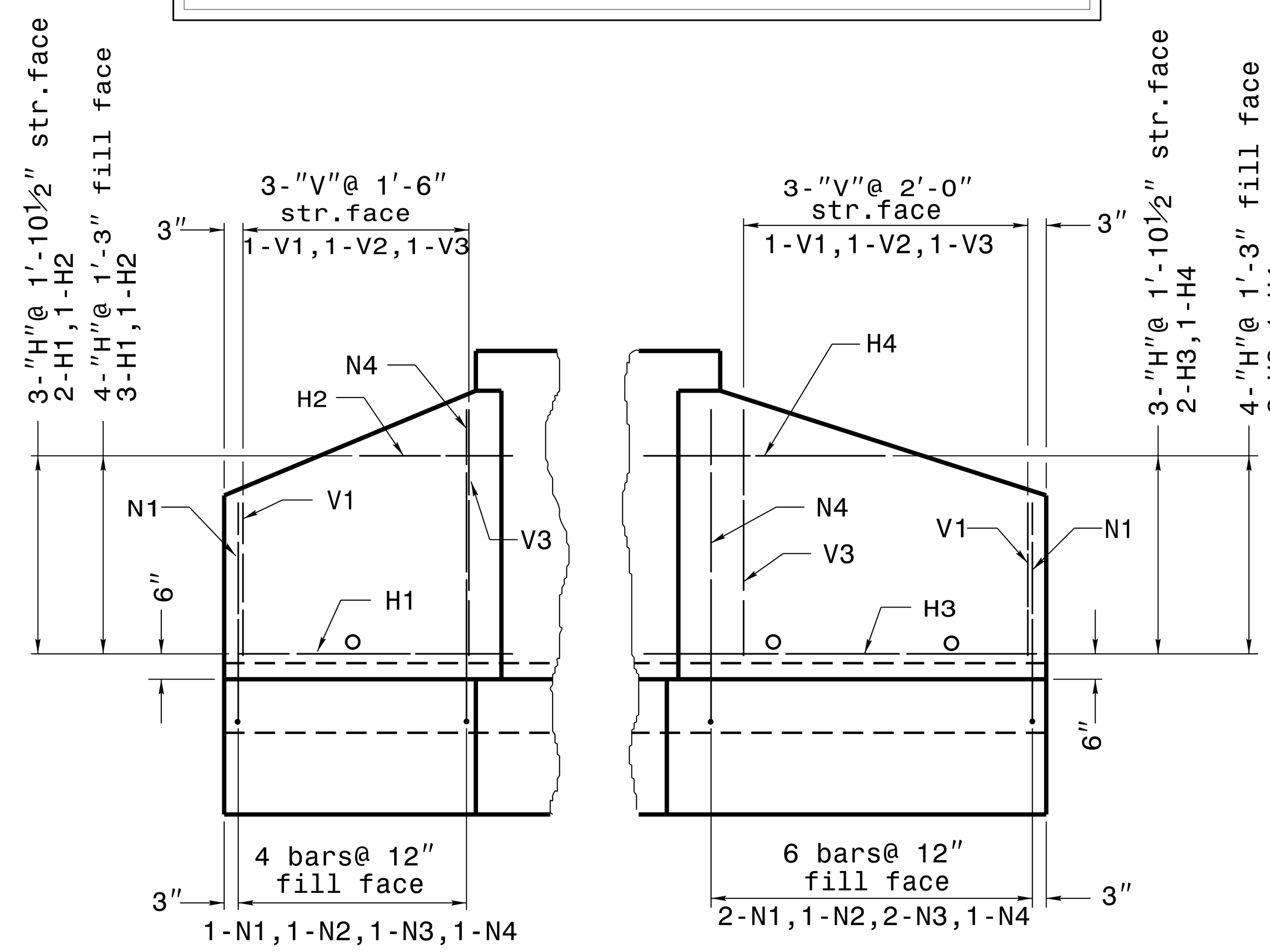


WING ELEVATION

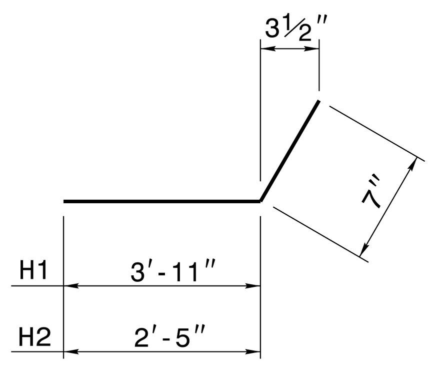


"H" BARS

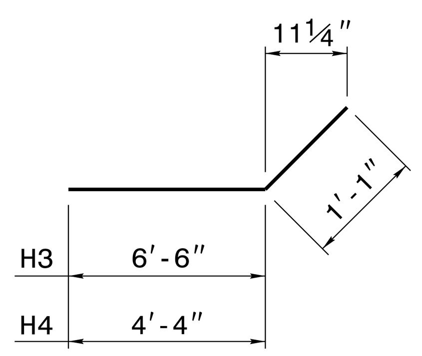


"H" BARS

"H", "N", & "Z" BAR DIMENSIONS ARE OUT TO OUT.

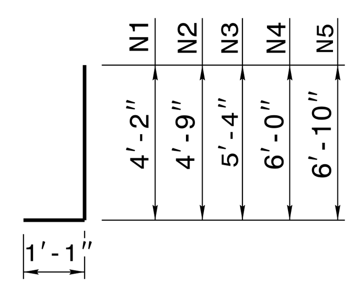


"N" BARS

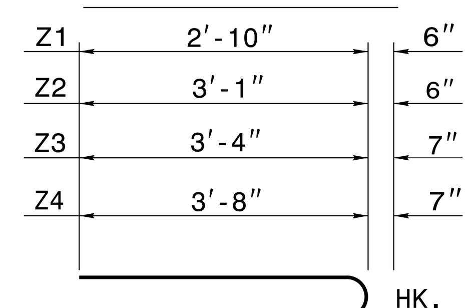


"Z" BARS

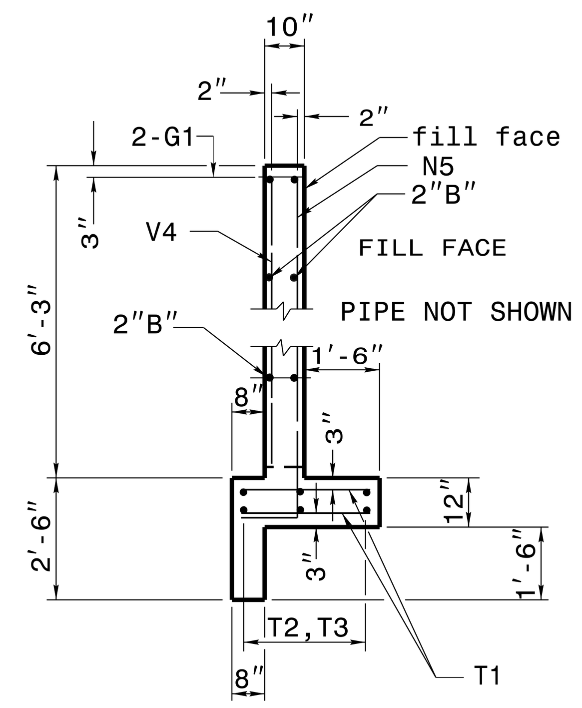


SECTION - BB

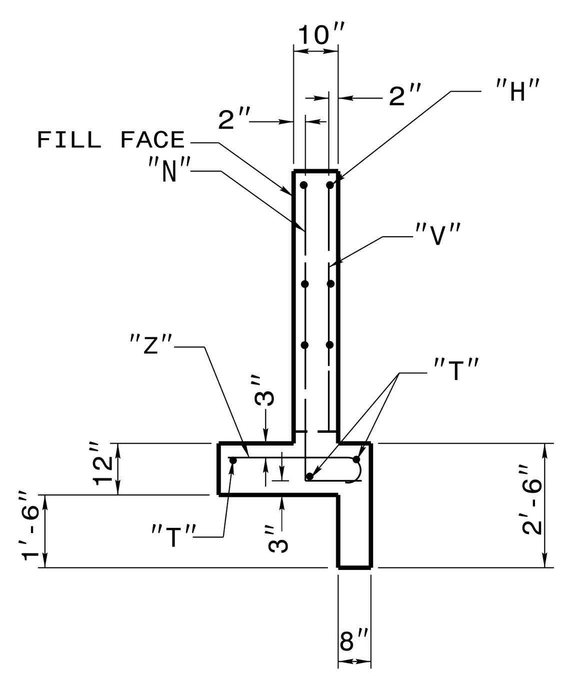


SECTION - AA

| BILL OF MATERIAL FOR ENDWALLS | | | | |
|---|---|---|---|---|
| REINF. STEEL | | | 1-PIPE | |
| BAR | SIZE | LENGTH | NO. | WEIGHT |
| Z1 | #4 | 3'-4" | 3 | 7 |
| Z2 | #4 | 3'-7" | 2 | 5 |
| Z3 | #5 | 3'-11" | 3 | 12 |
| Z4 | #5 | 4'-3" | 3 | 13 |
| N1 | #4 | 5'-3" | 3 | 11 |
| N2 | #4 | 5'-10" | 2 | 8 |
| N3 | #4 | 6'-5" | 3 | 13 |
| N4 | #5 | 7'-1" | 2 | 15 |
| N5 | #4 | 7'-11" | 6 | 32 |
| V1 | #4 | 3'-0" | 2 | 4 |
| V2 | #4 | 3'-10" | 2 | 5 |
| V3 | #4 | 4'-8" | 2 | 6 |
| V4 | #4 | 5'-9" | 3 | 12 |
| H1 | #4 | 4'-6" | 5 | 15 |
| H2 | #4 | 3'-0" | 2 | 4 |
| H3 | #4 | 7'-7" | 5 | 25 |
| H4 | #4 | 5'-5" | 2 | 7 |
| G1 | #7 | 9'-10" | 2 | 40 |
| | | | | |
| T1 | #4 | 2'-6" | 40 | 67 |
| T2 | #4 | 12'-10" | 6 | 51 |
| | | | | |
| T5 | #4 | 4'-2" | 3 | 8 |
| T6 | #4 | 6'-0" | 3 | 12 |
| B1 | #4 | 4'-9" | 6 | 19 |
| B2 | #4 | 6'-0" | 2 | 8 |
| | | | | |
| | | | | |
| REINF. STEEL LBS. | | | | 399 |
| CONC/C.M. CU. YDS. | | | 5.8 | |
| CONC/R.C. CU. YDS. | | | 5.6 | |

SHEET 1 OF 1

**838D24**


STATE OF
NORTH CAROLINA
DEPT. OF TRANSPORTATION
DIVISION OF HIGHWAYS
RALEIGH, N.C.

ENGLISH DETAIL DRAWING FOR
**REINFORCED CONCRETE ENDWALL**
SINGLE 54" PIPE 60° OR 120° SKEW

SHEET 1 OF 1

**838D24**


**CONTRACT STANDARDS & DEVELOPMENT UNIT**
**STANDARDS AND SPECIAL DESIGN**
Office 919-707-6950 FAX 919-250-4119

**SEE PLATE FOR TITLE**

ORIGINAL BY: ______ DATE: ______
MODIFIED BY: rnbritt DATE: 05-08-06
CHECKED BY: ______ DATE: ______
FILE SPEC.: s:nbritt/english/hydro/838d24 54 endwall 60sk.dgn

$$$$$$SYSTIME$$$$$
$$$$$$$$$$$DGN$$$$$$$$$$$$$$
$$$$USERNAME$$$$