09/08/99

TIP PROJECT: W-5329

CONTRACT: DB00200

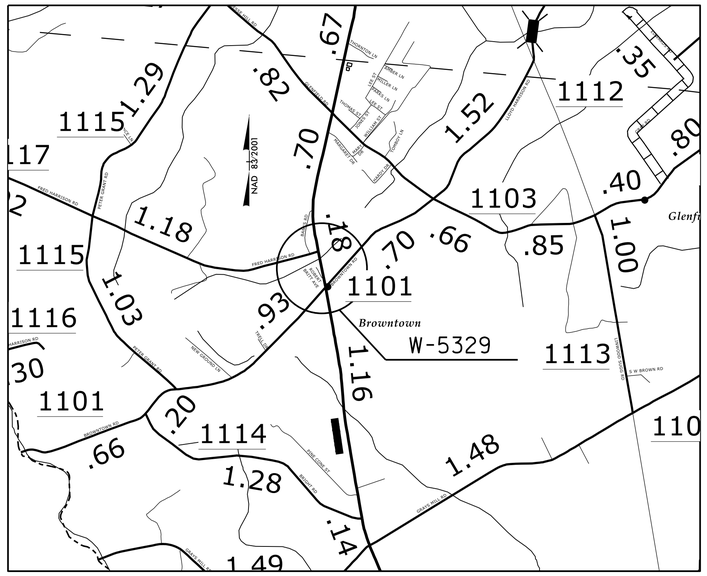

See Sheet 1-A For Index of Sheets

STATE OF NORTH CAROLINA
DIVISION OF HIGHWAYS

GREENE COUNTY

STATE	STATE PROJECT REFERENCE NO.	SHEET NO.	TOTAL SHEETS
N.C.	W-5329	1	

STATE PROJ. NO.	F. A. PROJ. NO.	DESCRIPTION
46254.1.1	HSIP-0258(20)	P.E.
46254.3.FR1	HSIP-0258(20)	CONST

LOCATION: US 258 BETWEEN SR 1117 AND .5 MILES SOUTH OF SR 1101

TYPE OF WORK: ADD MIDDLE LANE (3 LANE SECTION)

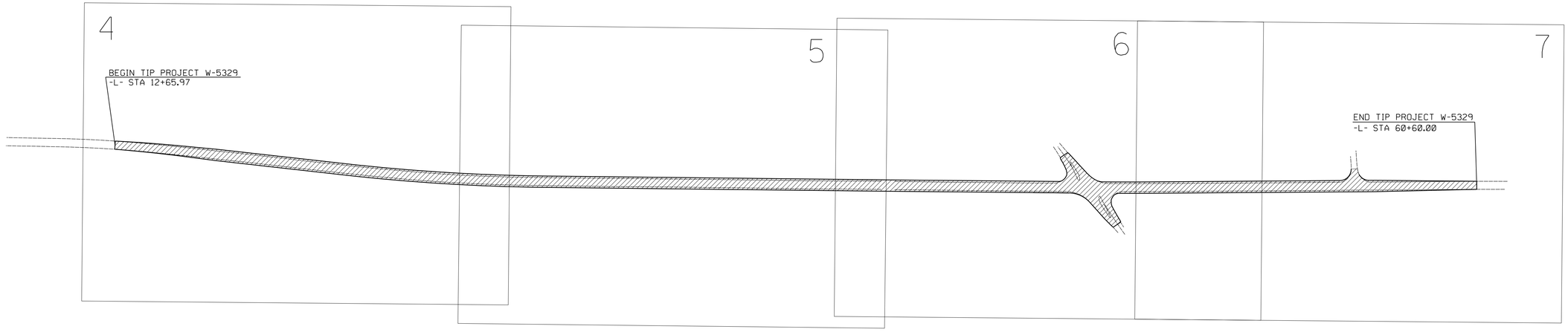

GRAPHIC SCALES

50 25 0 50 100
PLANS

PROJECT LENGTH

LENGTH TIP PROJECT W-5329 = 0.908 MILES

Prepared in the Office of:

DIVISION OF HIGHWAYS

1704 N. GREENE ST., GREENVILLE NC, 27834

2012 STANDARD SPECIFICATIONS

RIGHT OF WAY DATE:
N/A

LETTING DATE:
MAY 2015

ED EATMON P.E.
PROJECT ENGINEER

LANG JONES
PROJECT DESIGN ENGINEER

HYDRAULICS ENGINEER

NORTH CAROLINA PROFESSIONAL SEAL 39745 ENGINEER JONATHAN LYLE MOORE

DocuSigned by: Jonathan Lyle Moore 5/20/2015
A4D5C90A14244A7...
SIGNATURE:

ROADWAY DESIGN ENGINEER

NORTH CAROLINA PROFESSIONAL SEAL 11274 ENGINEER BRYCE EDWARD EATMON, III

DocuSigned by: Ed Eatmon 5/21/2015
A405C90A14244A7...
SIGNATURE:

STATE OF NORTH CAROLINA • DEPARTMENT OF TRANSPORTATION •

20-MAY-2015 08:17
G:\PROJECTS\GREENE\BROWN258\258Brown\brown258_pshl.dgn
$$$$USERNAME$$$$