STATE OF
NORTH CAROLINA
DEPT. OF TRANSPORTATION
DIVISION OF HIGHWAYS
RALEIGH, N.C.

ENGLISH DETAIL DRAWING FOR
REINFORCED CONCRETE ENDWALL
FOR SINGLE 60" PIPE 60° OR 120° SKEW

SEE STD. NO. 838.45 FOR GENERAL NOTES.

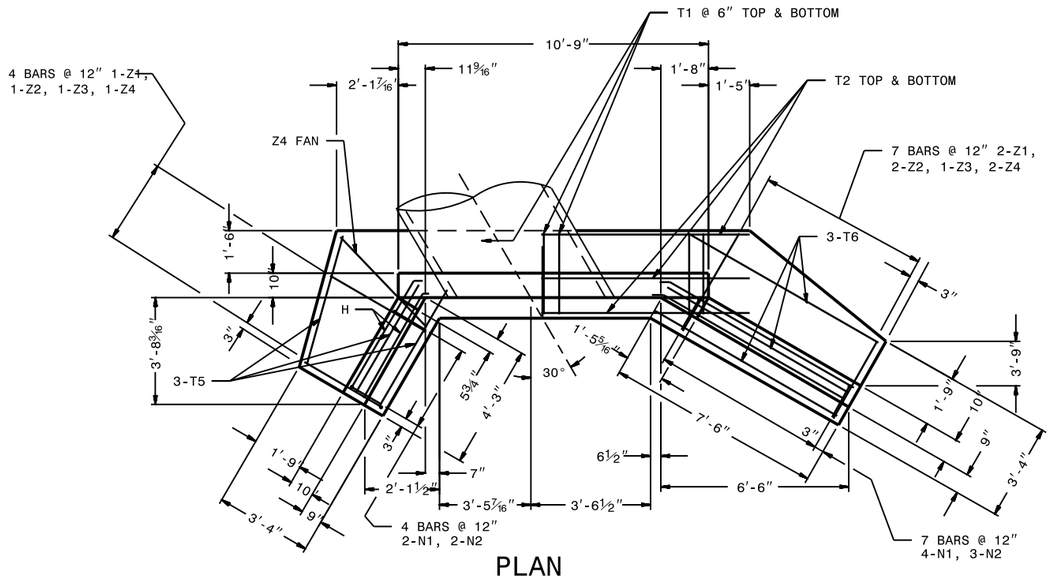

PLAN

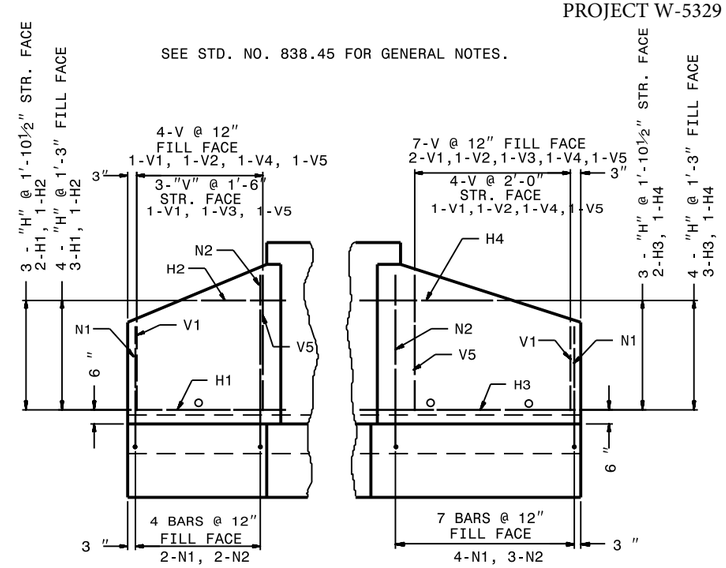

WING ELEVATION

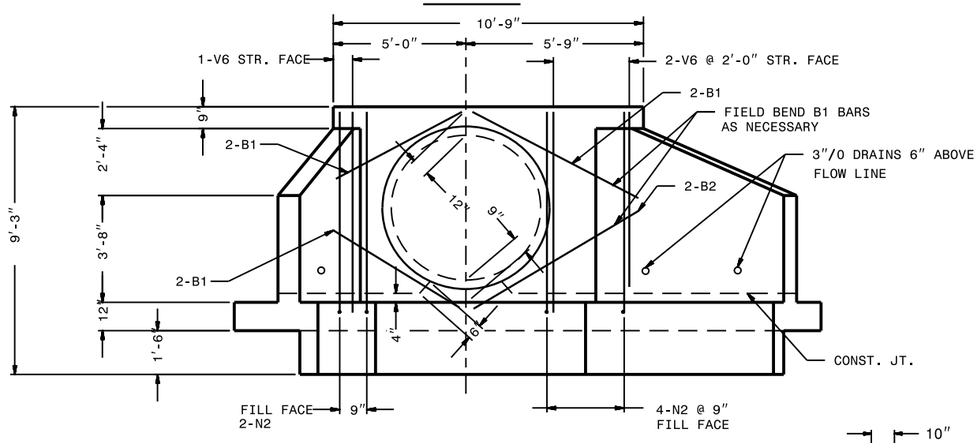

ELEVATION

BILL OF MATERIAL FOR ENDWALLS				
REINF. STEEL			1 - PIPES	
BAR	SIZE	LENGTH	NO.	WEIGHT
Z1	#4	3'-4"	3	7
Z2	#4	3'-7"	3	7
Z3	#5	4'-1"	2	9
Z4	#5	4'-4"	4	18
N1	#4	3'-5"	6	14
N2	#4	3'-11"	11	45
V1	#4	3'-3"	5	11
V2	#4	3'-11"	3	8
V3	#4	4'-3"	2	6
V4	#4	4'-6"	3	9
V5	#4	5'-1"	5	17
V6	#4	6'-3"	9	38
H1	#4	4'-11"	5	16
H2	#4	3'-9"	2	5
H3	#4	8'-7"	5	29
H4	#4	6'-7"	2	9
G1	#7	10'-5"	2	43
T1	#4	2'-6"	42	70
T2	#4	13'-11"	6	56
T5	#4	4'-6"	3	9
T6	#4	7'-0"	3	14
B1	#4	5'-0"	6	20
B2	#4	6'-6"	2	9
REINF. STEEL LBS.				469
CONC/C.M. CU. YDS.			6.7	
CONC/R.C. CU. YDS.			6.4	

"H", "N", & "Z" BAR DIMENSIONS ARE OUT TO OUT.

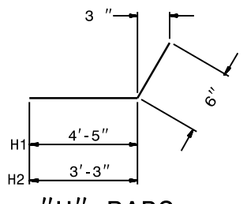

"H" BARS

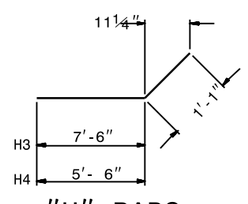

"H" BARS

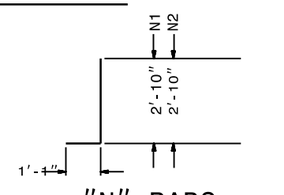

"N" BARS

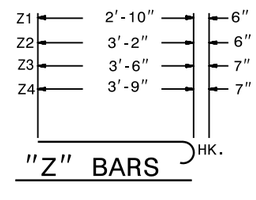

"Z" BARS

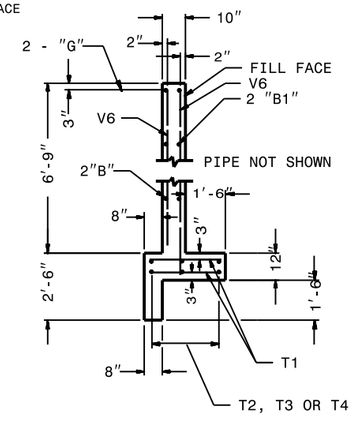

SECTION - BB

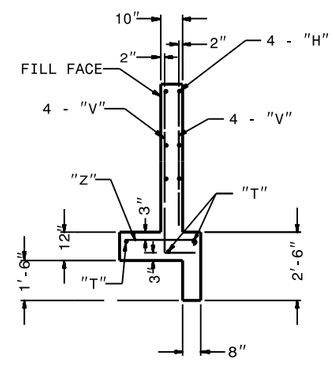

SECTION - AA

STATE OF
NORTH CAROLINA
DEPT. OF TRANSPORTATION
DIVISION OF HIGHWAYS
RALEIGH, N.C.

ENGLISH DETAIL DRAWING FOR
REINFORCED CONCRETE ENDWALL
FOR SINGLE 60" PIPE 60° OR 120° SKEW

SHEET 1 OF 1
838d27

SHEET 1 OF 1
838d27