PROJECT REFERENCE NO.	SHEET NO.
W-5601N	2A

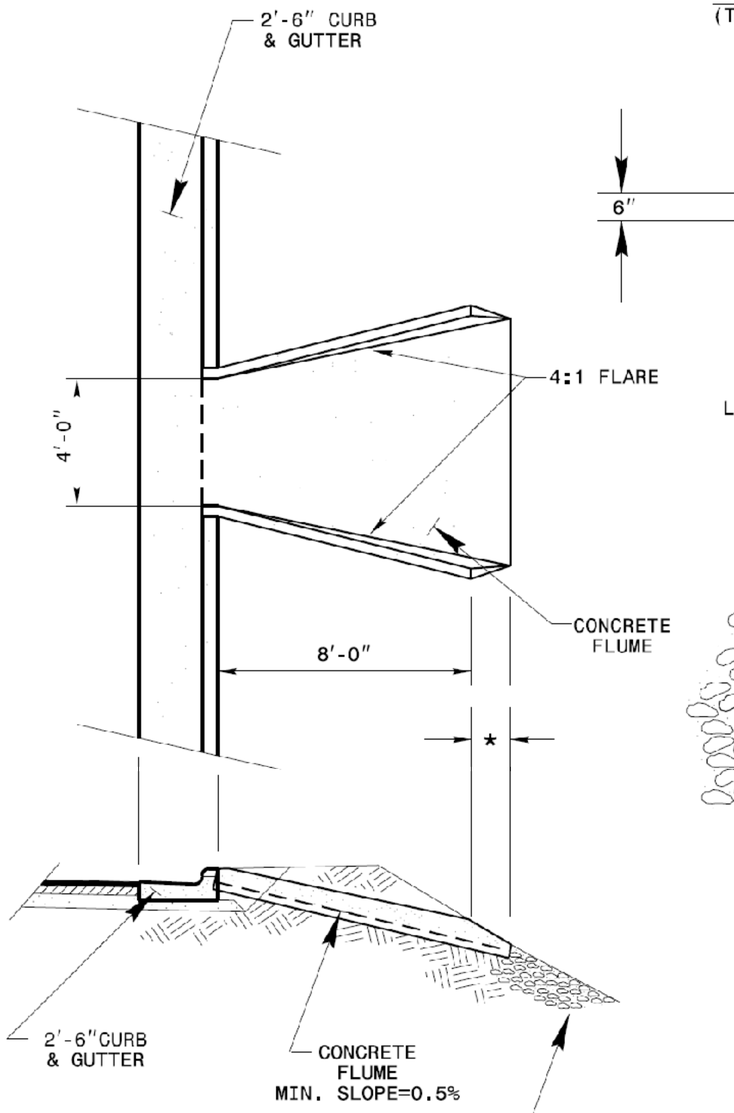

ELEVATION

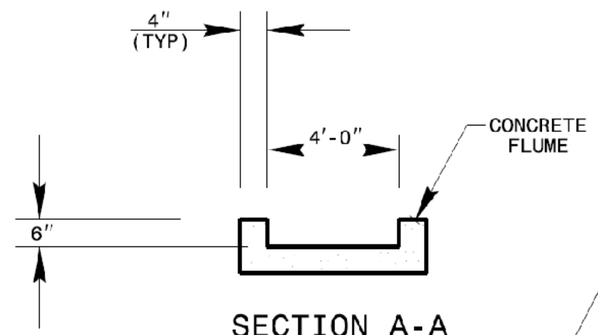

SECTION A-A

FLUME SIDES SHOULD BE FLUSH WITH ADJACENT GROUND LINE TO A MAX. HEIGHT OF 12"

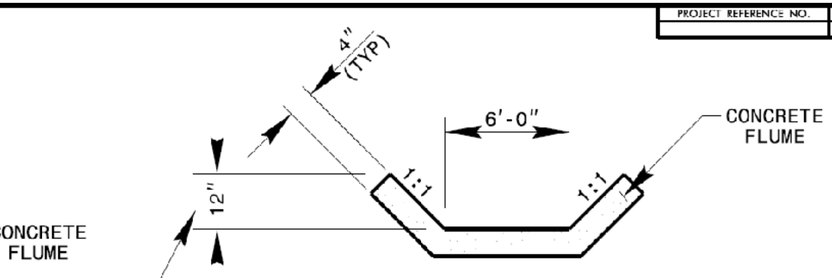

SECTION B-B

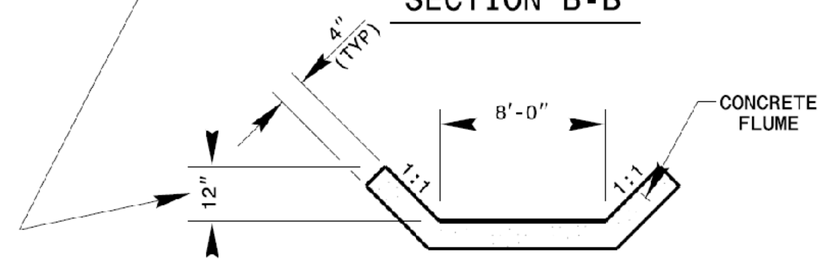

SECTION C-C

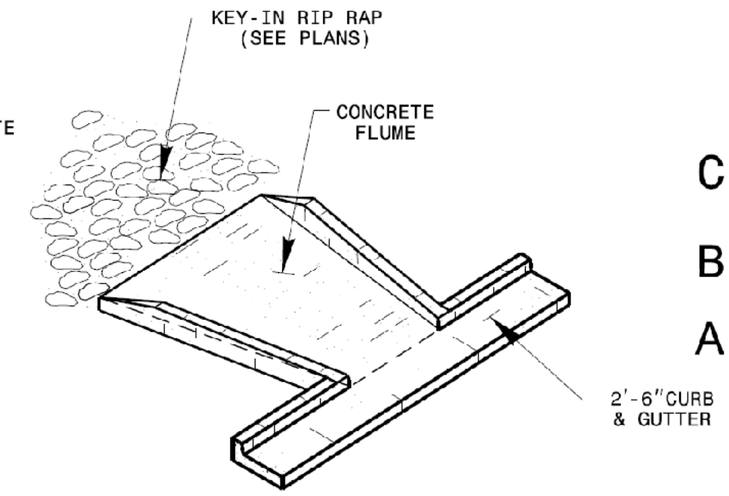

PERSPECTIVE

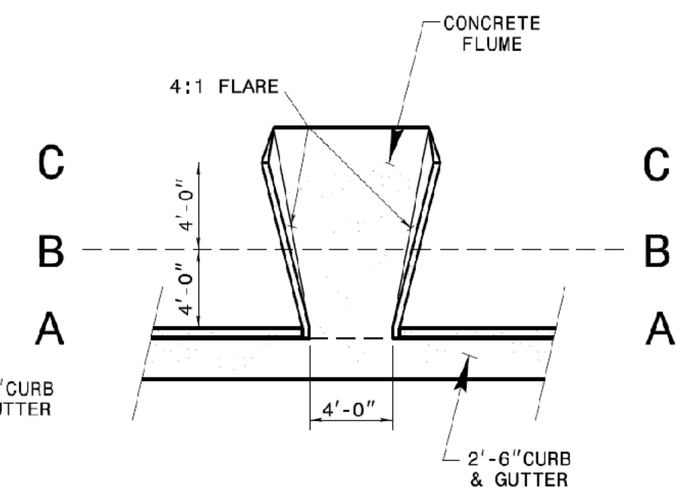

PLAN

* LENGTH VARIABLE WITH DITCH SLOPE

NOTES:

- CONSTRUCT CONCRETE FLUME IN ACCORDANCE WITH THIS DETAIL.
- RIP RAP LINED DITCH WILL BE THE TYPE AND LENGTH SPECIFIED BY THE ROADWAY PLANS. PLACE RIP-RAP AT THE END OF THE DITCH AS INDICATED BY STD. DWG. 876.02 FOR AN 18" PIPE.
- MODIFICATIONS MAY BE MADE AS DIRECTED BY THE ENGINEER.

CONTRACT STANDARDS & DEVELOPMENT UNIT
STANDARDS AND SPECIAL DESIGN
Office 919-707-6950 FAX 919-250-4119

CONCRETE FLUME

ORIGINAL BY: _____ DATE: _____
MODIFIED BY: nbratt DATE: 05-11-04
CHECKED BY: _____ DATE: _____
FILE SPEC.: dctails\nbratt\matrix\2201modifiedflume.dgn

REVISIONS

8/17/99

20-MAY-2005 08:12
C:\PROJECTS\IVYMILLS\IVYMILLS.dds2.psh_2a.dgn
$$$$USERNAME$$$$