| STATE | PROJECT REFERENCE NO. | SHEET NO. | TOTAL SHEETS |
|---|---|---|---|
| NC | 17BP.2.R.19 | 1 | X |

| STATE PROJ. NO. | | DESCRIPTION |
|---|---|---|
| 17BP.2.R.19 | | CONST |

TIP PROJECT: 17BP.2.R.19

CONTRACT: DB00120

See Sheet 1-A For Index of Sheets

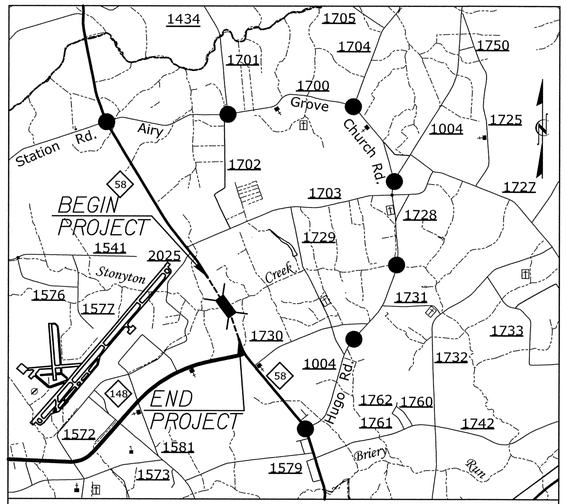


VICINITY MAP ●-●-● DETOUR ROUTE

N.T.S.

# STATE OF NORTH CAROLINA
# DIVISION OF HIGHWAYS

# *LENOIR COUNTY*

***LOCATION: BRIDGE NO. 050 OVER STONEYTON CREEK ON N.C. 58***

***TYPE OF WORK: GRADING, PAVING, RESURFACING, STRUCTURE, DRAINAGE, & GUARDRAILS.***

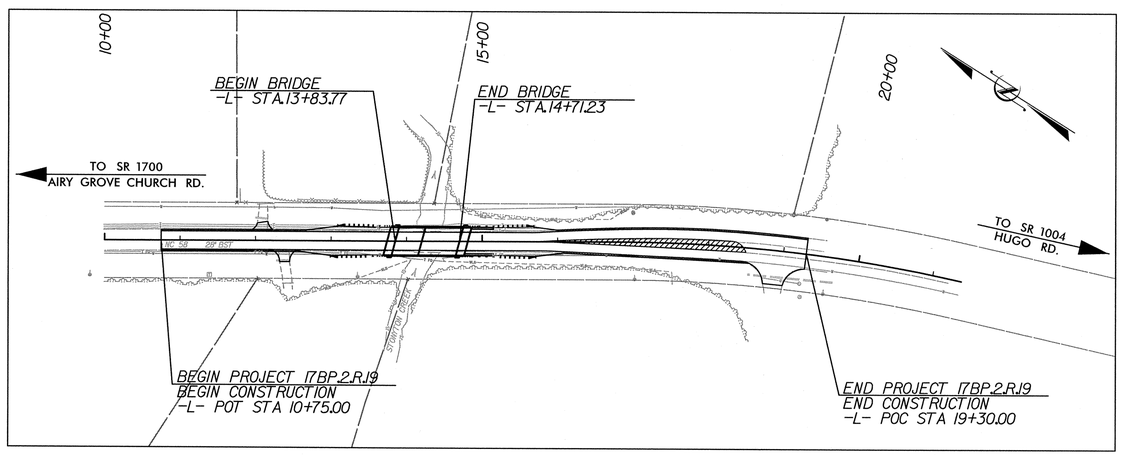


CLEARING ON THIS PROJECT SHALL BE PERFORMED TO THE LIMITS ESTABLISHED BY METHOD II.

## GRAPHIC SCALES

50 25 0 50 100
PLANS

50 25 0 50 100
PROFILE (HORIZONTAL)

10 5 0 10 20
PROFILE (VERTICAL)

## DESIGN DATA

ADT 2008 = 4500
ADT 2035 = 9000
DHV = 10%
D = 60%
T = 6% *
V = 60 MPH
STATUTORY = 55 MPH
* TTST 2% DUAL 4%
MAJOR COLLECTOR

## PROJECT LENGTH

LENGTH OF ROADWAY TIP PROJECT 17BP.2.R.19 = 0.14 MI.

LENGTH OF STRUCTURE TIP PROJECT 17BP.2.R.19 = 0.02 MI.

TOTAL LENGTH OF TIP PROJECT 17BP.2.R.19 = 0.16 MI.

Prepared In the Office of:

HNTB NORTH CAROLINA, P.C.
343 E. Six Forks Road, Suite 200
Raleigh, North Carolina 27609
NC License No: C-1554

2012 STANDARD SPECIFICATIONS

RIGHT OF WAY DATE:
OCTOBER 11, 2012

LETTING DATE:
JUNE 26, 2013

ENRICO A. ROQUE, P.E.
PROJECT ENGINEER

ANTHONY THOMPSON, P.E
PROJECT DESIGNER

MARIA ROGERSON, P.E.
NCDOT CONTACT

HYDRAULICS ENGINEER

NORTH CAROLINA PROFESSIONAL SEAL 15764 ENGINEER JAMES A. BYRD

SIGNATURE: James A. Byrd P.E. 6/24/13

ROADWAY DESIGN ENGINEER

NORTH CAROLINA PROFESSIONAL SEAL 19824 ENGINEER ENRICO A. ROQUE

SIGNATURE: Enrico A. Roque P.E. 6/24/13

DIVISION OF HIGHWAYS
STATE OF NORTH CAROLINA

STATE OF NORTH CAROLINA DEPARTMENT OF TRANSPORTATION

P.E.
STATE HIGHWAY DESIGN ENGINEER

$$$$DATE$$$$
$$$$SYSTIME$$$$
$$$$DGN$$$$

HNTB
HNTB NORTH CAROLINA, P.C.
343 E. Six Forks Road, Suite 200
Raleigh, North Carolina 27609
NC License No: C-1554

| PROJECT REFERENCE NO. | SHEET NO. |
|---|---|
| 17BP.2.R.19 | 1-A |
| R/W SHEET NO. | |
| ROADWAY DESIGN ENGINEER | |

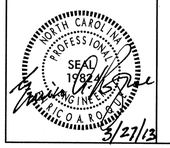


REVISIONS

## INDEX OF SHEETS


| SHEET NUMBER | SHEET |
|---|---|
| 1 | TITLE SHEET |
| 1-A | INDEX OF SHEETS, GENERAL NOTES & LIST OF STANDARDS |
| 1-B | SYMBOLOGY SHEET |
| 2 | TYPICAL SECTION SHEET |
| 3 | EARTHWORK, PAVEMENT REMOVAL, GUARDRAIL & DRAINAGE SUMMARY SHEET |
| 4 | PLAN & PROFILE SHEET |
| TMP-1 THRU TMP-2 | TRAFFIC CONTROL PLANS |
| EC-1 | EROSION CONTROL TITLE SHEET |
| EC-2 | EROSION CONTROL - COIR FIBER WATTLE DETAIL |
| EC-3 | EROSION CONTROL- WATTLE / SILT FENCE BREAK DETAIL |
| EC-4 | EROSION CONTROL - SOIL STABILIZATION TIME FRAMES |
| EC-5 | EROSION CONTROL SHEET |
| P-1 | PERMIT DRAWING |
| X-1 THRU X-6 | -L- CROSS SECTION SHEETS |
| S-1 THRU S-18 | BRIDGE PLANS |
| UC-1 THRU UC-6 | UTILITIES PLANS |
| UO-1 THRU UO-2 | UTILITIES BY OTHERS |


GENERAL NOTES:

2012 SPECIFICATIONS
EFFECTIVE: 01-17-12
REVISED: 11/01/11

GRADE LINE:
GRADING AND SURFACING:

THE GRADE LINES SHOWN DENOTE THE FINISHED ELEVATION OF THE PROPOSED SURFACING AT GRADE POINTS SHOWN ON THE TYPICAL SECTIONS. GRADE LINES MAY BE ADJUSTED AT THEIR BEGINNING AND ENDING AND AT STRUCTURES AS DIRECTED BY THE ENGINEER IN ORDER TO SECURE A PROPER TIE-IN.

CLEARING:

CLEARING ON THIS PROJECT SHALL BE PERFORMED TO THE LIMITS ESTABLISHED BY METHOD II.

SUPERELEVATION:

ALL CURVES ON THIS PROJECT SHALL BE SUPERELEVATED IN ACCORDANCE WITH STD. NO. 225.04 USING THE RATE OF SUPERELEVATION AND RUNOFF SHOWN ON THE PLANS. SUPERELEVATION IS TO BE REVOLVED ABOUT THE GRADE POINTS SHOWN ON THE TYPICAL SECTIONS.

SHOULDER CONSTRUCTION:

ASPHALT, EARTH, AND CONCRETE SHOULDER CONSTRUCTION ON THE HIGH SIDE OF SUPERELEVATED CURVES SHALL BE IN ACCORDANCE WITH STD. NO. 560.01.

SIDE ROADS:

THE CONTRACTOR WILL BE REQUIRED TO DO ALL NECESSARY WORK TO PROVIDE SUITABLE CONNECTIONS WITH ALL ROADS, STREETS, AND DRIVES ENTERING THIS PROJECT. THIS WORK WILL BE PAID FOR AT THE CONTRACT UNIT PRICE FOR THE PARTICULAR ITEMS INVOLVED.

DRIVEWAYS:

DRIVEWAYS SHALL BE CONSTRUCTED IN ACCORDANCE WITH STD. 848.02 USING 3' RADII OR RADII AS SHOWN ON THE PLANS. LOCATIONS OF DRIVES WILL BE AS SHOWN ON THE PLANS OR AS DIRECTED BY THE ENGINEER.

GUARDRAIL:

THE GUARDRAIL LOCATIONS SHOWN ON THE PLANS MAY BE ADJUSTED DURING CONSTRUCTION AS DIRECTED BY THE ENGINEER. THE CONTRACTOR SHOULD CONSULT WITH THE ENGINEER PRIOR TO ORDERING GUARDRAIL MATERIAL.

UTILITIES:

UTILITY OWNERS ON THIS PROJECT ARE Phone - CenturyLink

Water - North Lenoir Water Corporation

ANY RELOCATION OF EXISTING UTILITIES WILL BE ACCOMPLISHED BY OTHERS, EXCEPT AS SHOWN ON THE PLANS.

2012 ROADWAY ENGLISH STANDARD DRAWINGS

The following Roadway Standards as appear in "Roadway Standard Drawings" Highway Design Branch - N. C. Department of Transportation - Raleigh, N. C., Dated January, 2012 are applicable to this project and by reference hereby are considered a part of these plans:

| STD.NO. | TITLE |
|---|---|
| DIVISION 2 - EARTHWORK | |
| 200.02 | Method of Clearing - Method II |
| 225.02 | Guide for Grading Subgrade - Secondary and Local |
| 225.04 | Method of Obtaining Superelevation - Two Lane Pavement |
| DIVISION 3 - PIPE CULVERTS | |
| 300.01 | Method of Pipe Installation |
| 310.10 | Driveway Pipe Construction |
| DIVISION 4 - MAJOR STRUCTURES | |
| 422.10 | Reinforced Bridge Approach Fills |
| DIVISION 5 - SUBGRADE, BASES AND SHOULDERS | |
| 560.01 | Method of Shoulder Construction - High Side of Superelevated Curve - Method I |
| DIVISION 8 - INCIDENTALS | |
| 840.36 | Traffic Bearing Grated Drop Inlet - for Steel (840.37) Double Frame and Grates |
| 840.37 | Steel Grate and Frame |
| 846.01 | Concrete Curb, Gutter and Curb & Gutter |
| 846.04 | Drop Inlet Installation in Shoulder Berm Gutter |
| 848.02 | Driveway Turnout - Radius Type |
| 862.01 | Guardrail Placement |
| 862.02 | Guardrail Installation |
| 862.03 | Structure Anchor Units |
| 876.01 | Rip Rap in Channels |
| 876.02 | Guide for Rip Rap at Pipe Outlets |

$$$$DATE$$$$
$$$$$$SYSTIME$$$$$
$$$$$$$$$$$$$$$$DGN$$$$$$$$$$$$$$$$

| PROJECT REFERENCE NO. | SHEET NO. |
|---|---|
| 17BP.2.R.19 | 1-B |

***Note: Not to Scale***

***S.U.E. = Subsurface Utility Engineering***

STATE OF NORTH CAROLINA
DIVISION OF HIGHWAYS

# CONVENTIONAL PLAN SHEET SYMBOLS

## *BOUNDARIES AND PROPERTY:*

- State Line
- County Line
- Township Line
- City Line
- Reservation Line
- Property Line
- Existing Iron Pin — EIP
- Property Corner
- Property Monument — ECM
- Parcel/Sequence Number — 123
- Existing Fence Line
- Proposed Woven Wire Fence
- Proposed Chain Link Fence
- Proposed Barbed Wire Fence
- Existing Wetland Boundary — WLB
- Proposed Wetland Boundary — WLB
- Existing Endangered Animal Boundary — EAB
- Existing Endangered Plant Boundary — EPB

## *BUILDINGS AND OTHER CULTURE:*

- Gas Pump Vent or U/G Tank Cap
- Sign — S
- Well — W
- Small Mine
- Foundation
- Area Outline
- Cemetery
- Building
- School
- Church
- Dam

## *HYDROLOGY:*

- Stream or Body of Water
- Hydro, Pool or Reservoir
- Jurisdictional Stream — JS
- Buffer Zone 1 — BZ 1
- Buffer Zone 2 — BZ 2
- Flow Arrow
- Disappearing Stream
- Spring
- Wetland
- Proposed Lateral, Tail, Head Ditch — FLOW
- False Sump

## *RAILROADS:*

- Standard Gauge — CSX TRANSPORTATION
- RR Signal Milepost — MILEPOST 35
- Switch — SWITCH
- RR Abandoned
- RR Dismantled

## *RIGHT OF WAY:*

- Baseline Control Point
- Existing Right of Way Marker
- Existing Right of Way Line
- Proposed Right of Way Line — RW
- Proposed Right of Way Line with Iron Pin and Cap Marker — RW
- Proposed Right of Way Line with Concrete or Granite Marker — RW
- Existing Control of Access — CA
- Proposed Control of Access — CA
- Existing Easement Line — E
- Proposed Temporary Construction Easement — E
- Proposed Temporary Drainage Easement — TDE
- Proposed Permanent Drainage Easement — PDE
- Proposed Permanent Utility Easement — PUE

## *ROADS AND RELATED FEATURES:*

- Existing Edge of Pavement
- Existing Curb
- Proposed Slope Stakes Cut — C
- Proposed Slope Stakes Fill — F
- Proposed Wheel Chair Ramp — WCR
- Proposed Wheel Chair Ramp Curb Cut — WCC
- Curb Cut for Future Wheel Chair Ramp — CCFR
- Existing Metal Guardrail
- Proposed Guardrail
- Existing Cable Guiderail
- Proposed Cable Guiderail
- Equality Symbol
- Pavement Removal

## *VEGETATION:*

- Single Tree
- Single Shrub
- Hedge
- Woods Line
- Orchard
- Vineyard — Vineyard

## *EXISTING STRUCTURES:*

MAJOR:

- Bridge, Tunnel or Box Culvert — CONC
- Bridge Wing Wall, Head Wall and End Wall — CONC WW

MINOR:

- Head and End Wall — CONC HW
- Pipe Culvert
- Footbridge
- Drainage Box: Catch Basin, DI or JB — CB
- Paved Ditch Gutter
- Storm Sewer Manhole — S
- Storm Sewer — S

## *UTILITIES:*

POWER:

- Existing Power Pole
- Proposed Power Pole
- Existing Joint Use Pole
- Proposed Joint Use Pole
- Power Manhole — P
- Power Line Tower
- Power Transformer
- U/G Power Cable Hand Hole — HH
- H-Frame Pole
- Recorded U/G Power Line — P
- Designated U/G Power Line (S.U.E.*) — P

TELEPHONE:

- Existing Telephone Pole
- Proposed Telephone Pole
- Telephone Manhole — T
- Telephone Booth
- Telephone Pedestal — T
- Telephone Cell Tower
- U/G Telephone Cable Hand Hole — HH
- Recorded U/G Telephone Cable — T
- Designated U/G Telephone Cable (S.U.E.*) — T
- Recorded U/G Telephone Conduit — TC
- Designated U/G Telephone Conduit (S.U.E.*) — TC
- Recorded U/G Fiber Optics Cable — T FO
- Designated U/G Fiber Optics Cable (S.U.E.*) — T FO

WATER:

- Water Manhole — W
- Water Meter
- Water Valve
- Water Hydrant
- Recorded U/G Water Line — W
- Designated U/G Water Line (S.U.E.*) — W
- Above Ground Water Line — A/G Water

TV:

- TV Satellite Dish
- TV Pedestal — C
- TV Tower
- U/G TV Cable Hand Hole — HH
- Recorded U/G TV Cable — TV
- Designated U/G TV Cable (S.U.E.*) — TV
- Recorded U/G Fiber Optic Cable — TV FO
- Designated U/G Fiber Optic Cable (S.U.E.*) — TV FO

GAS:

- Gas Valve
- Gas Meter
- Recorded U/G Gas Line — G
- Designated U/G Gas Line (S.U.E.*) — G
- Above Ground Gas Line — A/G Gas

SANITARY SEWER:

- Sanitary Sewer Manhole
- Sanitary Sewer Cleanout
- U/G Sanitary Sewer Line — SS
- Above Ground Sanitary Sewer — A/G Sanitary Sewer
- Recorded SS Forced Main Line — FSS
- Designated SS Forced Main Line (S.U.E.*) — FSS

MISCELLANEOUS:

- Utility Pole
- Utility Pole with Base
- Utility Located Object
- Utility Traffic Signal Box — S
- Utility Unknown U/G Line — ?UTL
- U/G Tank; Water, Gas, Oil
- A/G Tank; Water, Gas, Oil
- U/G Test Hole (S.U.E.*)
- Abandoned According to Utility Records — AATUR
- End of Information — E.O.I.

HNTB
HNTB NORTH CAROLINA, P.C.
343 E. Six Forks Road, Suite 200
Raleigh, North Carolina 27609
NC License No: C-1554

| PROJECT REFERENCE NO. | SHEET NO. |
|---|---|
| 17BP.2.R.19 | 2 |
| R/W SHEET NO. | |

ROADWAY DESIGN ENGINEER

NORTH CAROLINA PROFESSIONAL SEAL 19824 ENGINEER
N.C.O.A.R.C.H.E.
3/27/13

## PAVEMENT SCHEDULE

| | |
|---|---|
| A1 | VARIABLE DEPTH PORTLAND CEMENT CONCRETE OVERLAY |
| C1 | PROP. APPROX. 3.0" ASPHALT CONCRETE SURFACE COURSE, TYPE S9.5B, AT AN AVERAGE RATE OF 168 LBS. PER SQ. YARD IN EACH OF TWO LAYERS. |
| D | PROP. APPROX. 2.5" ASPHALT CONCRETE INTERMEDIATE COURSE, TYPE I19.0B, AT AN AVERAGE RATE OF 285 LBS. PER SQ. YD. |
| D1 | PROP. VAR. DEPTH ASPHALT CONCRETE INTERMEDIATE COURSE, TYPE I19.0B, AT AN AVERAGE RATE OF 114 LBS. PER SQ. YD. PER 1" DEPTH, TO BE PLACED IN LAYERS NOT LESS THAN 2 1/2" IN DEPTH OR GREATER THAN 4" IN DEPTH. |
| E | PROP. APPROX. 4" ASPHALT CONCRETE BASE COURSE, TYPE B25.0B, AT AN AVERAGE RATE OF 456 LBS. PER SQ. YARD. |
| E1 | PROP. VARIABLE DEPTH ASPHALT CONCRETE BASE COURSE, TYPE B25.0B AT AN AVERAGE RATE OF 114 LBS. PER SQ. YARD PER INCH DEPTH, TO BE PLACED IN LAYERS NOT GREATER THAN 5.5" IN DEPTH OR LESS THAN 3" IN DEPTH. |
| T | EARTH MATERIAL |
| U | EXISTING PAVEMENT |
| W | WEDGING (SEE DETAIL) |

ALL PAVEMENT EDGE SLOPES ARE 1:1 UNLESS SHOWN OTHERWISE

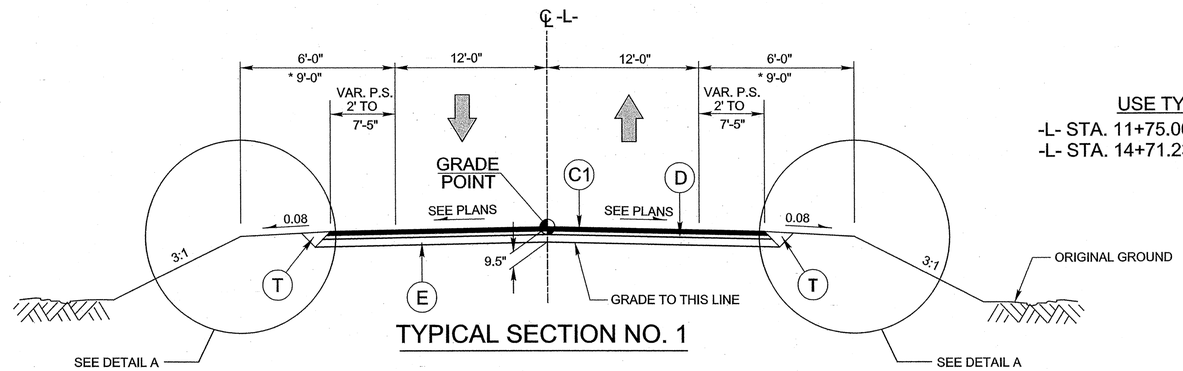


TYPICAL SECTION NO. 1

USE TYPICAL SECTION NO. 1 FROM:
-L- STA. 11+75.00 TO -L- STA. 13+83.77 (BEGIN BRIDGE)
-L- STA. 14+71.23 (END BRIDGE) TO -L- STA. 17+50.00

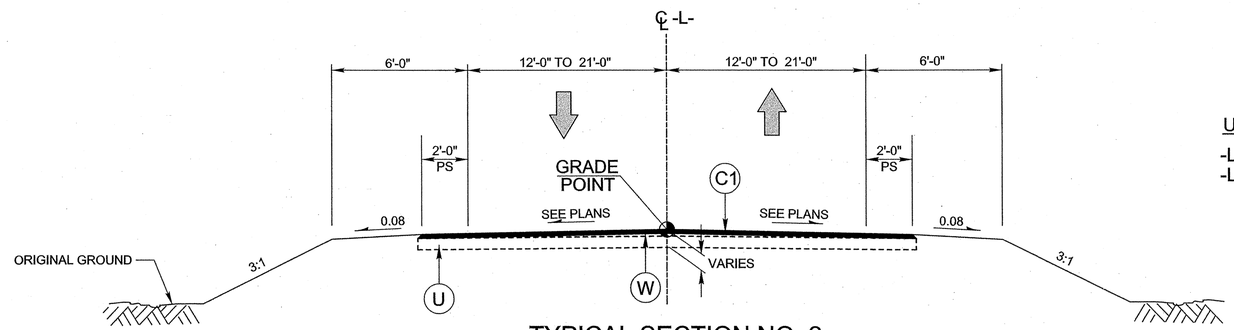


TYPICAL SECTION NO. 2

USE TYPICAL SECTION NO. 2 FROM:
-L- STA. 10+75.00 TO -L- STA. 11+75.00
-L- STA. 17+50.00 TO -L- STA. 19+30.00

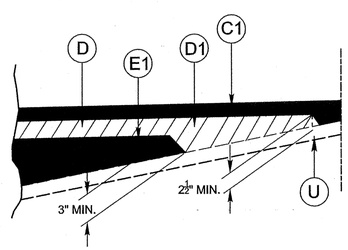


DETAIL SHOWING METHOD OF WEDGING
SEE TYPICAL SECTIONS

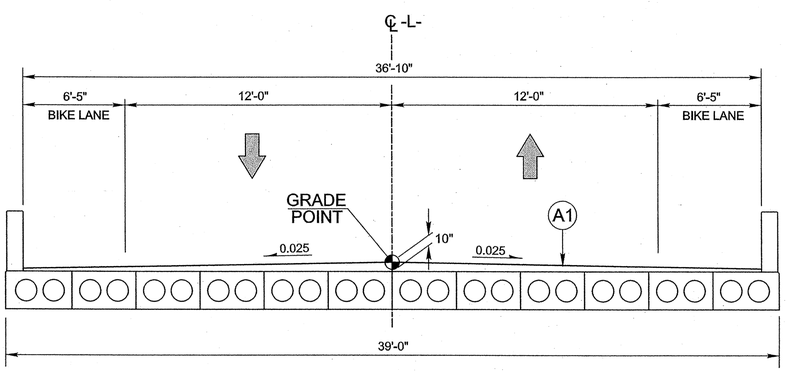


TYPICAL SECTION NO. 3
CORED SLAB BRIDGE OVERLAY

USE TYPICAL SECTION NO. 3 FROM:
-L- STA. 13+83.77 TO -L- STA. 14+71.23

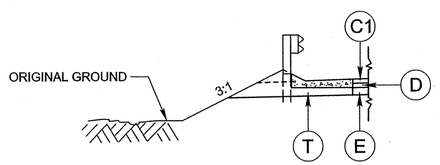


DETAIL A
SHOULDER BERM GUTTER LOCATIONS
-L- STA. 14+77.3 TO -L- STA. 15+16.2 RT
-L- STA. 14+87.1 TO -L- STA. 15+16.2 LT

NOTES: * SHOULDER WIDTH INCREASED 3' WITH THE USE OF GUARDRAIL

REVISIONS

$$$$DATE$$$$
$$$$

HNTB
HNTB NORTH CAROLINA, P.C.
343 E. Six Forks Road, Suite 200
Raleigh, North Carolina 27609
NC License No: C-1554

| PROJECT REFERENCE NO. | SHEET NO. |
|---|---|
| 17BP.2.R.9 | 3 |
| R/W SHEET NO. | |
| ROADWAY DESIGN ENGINEER | |

NORTH CAROLINA PROFESSIONAL SEAL 19212 ENGINEER R. A. COA. ROGERS, JR.
6/4/13

# SUMMARY OF EARTHWORK
## IN CUBIC YARDS

| STATION | STATION | UNCLASSIFIED EXCAVATION | EMBANK. +% | BORROW | WASTE |
|---|---|---|---|---|---|
| -L- STA. 10+75.00 | -L- STA. 14+12.00 | 400 | 758 | 358 | |
| -L- STA. 13+89.00 | -L- STA. 15+25.00 | 223 | 827 | 604 | |
| | | | | | |
| | | | | | |
| | | | | | |
| | | | | | |
| GRAND TOTALS: | | 623 | 1585 | 962 | |
| | | | | | |
| SAY: | | 630 | 1600 | 970 | |

# DRAINAGE SUMMARY

| STATION / SIZE / THICKNESS OR GAUGE | LOCATION (LT,RT, OR CL) | STRUCTURE NO. FROM | STRUCTURE NO. TO | TOP ELEVATION | INVERT ELEVATION | INVERT ELEVATION | SLOPE CRITICAL | CLASS IV R.C. PIPE (UNLESS NOTED OTHERWISE) 15" | 18" | 24" | QUANTITIES FOR DRAINAGE STRUCTURES: PER EACH (0 THRU 5.0') | TOTAL L.F. FOR PAY QUANTITY SHALL BE COL.'A' + (1.3 X COL. 'B'): 5.0' THRU 10.0' A | 10.0' AND ABOVE B | SIDE DRAIN PIPE 15" | 18" | 24" | GRATED D.I., TYPE 'B' STD. 840.36 | T.B.D.I. FRAME AND GRATE STD. 840.37 | | REMARKS |
|---|---|---|---|---|---|---|---|---|---|---|---|---|---|---|---|---|---|---|---|---|
| -L- 15+13.00 | RT | 0401 | | 62.74 | | | | | | | 1 | | | | | | 1 | 1 | | |
| -L- 15+13.00 | LT | 0402 | | 62.74 | | | | | | | 1 | | | | | | 1 | 1 | | |
| -L- 15+13.00 | CL | 0401 | 0402 | | 58.20 | 57.74 | | 32 | | | | | | | | | | | | |
| -L- 15+13.00 | LT | 0402 | OUT | | 57.74 | 57.48 | | 20 | | | | | | | | | | | | |
| -L- 12+10.57 | LT | | | | | | | | | | | | | | 40 | | | | | REMOVE 24' OF EXISTING CMP |
| -L- 12+37.53 | RT | | | | | | | | | | | | | | 32 | | | | | REMOVE 20' OF EXISTING HDPE |
| TOTAL | | | | | | | | 52 | | | 2 | | | | 72 | | 2 | 2 | | |

ABBREVIATIONS

| | |
|---|---|
| C.B. | CATCH BASIN |
| N.D.I. | NARROW DROP INLET |
| D.I. | DROP INLET |
| M.D.I. | MEDIAN DROP INLET |
| M.D.I. (N.S.) | MEDIAN DROP INLET (NARROW SLOT) |
| J.B. | JUNCTION BOX |
| M.H. | MANHOLE |
| T.B.D.I. | TRAFFIC BEARING DROP INLET |
| T.B.J.B. | TRAFFIC BEARING JUCTION BOX |

# PAVEMENT REMOVAL SUMMARY
## IN SQUARE YARDS

| LOCATION | REMOVAL OF ASPHALT PAVEMENT | BREAKING OF ASPHALT PAVEMENT |
|---|---|---|
| -L- STA. 11+75 TO 12+75 | 307 | |
| -L- STA. 12+75 TO 13+75 | | 299 |
| -L- STA. 13+75 TO 14+10 | 99 | |
| -L- STA. 14+44 TO 17+50 | 1073 | |
| | | |
| GRAND TOTAL | 1479 | 299 |
| SAY | 1500 | 300 |

# GUARDRAIL SUMMARY

| SURVEY LINE | BEG. STA. | END STA. | LOCATION | LENGTH: STRAIGHT | SHOP CURVED | DOUBLE FACED | WARRANT POINT: APPROACH END | TRAILING END | "N" DIST. FROM E.O.L. | TOTAL SHOULDER WIDTH | FLARE LENGTH: APPROACH END | TRAILING END | W: APPROACH END | TRAILING END | ANCHORS: XI MOD | XI | GRAU 350 | TYPE 350 (TL-3) | XIII | CAT-1 | III | BIC | AT-1 | IMPACT ATTENUATOR TYPE 350: EA | G | NG | SINGLE FACED GUARDRAIL | REMOVE EXISTING GUARDRAIL | REMOVE AND STOCKPILE EXISTING GUARDRAIL | REMARKS |
|---|---|---|---|---|---|---|---|---|---|---|---|---|---|---|---|---|---|---|---|---|---|---|---|---|---|---|---|---|---|---|
| -L- | 12+97.59 | 13+78.84 | RT | 87.5 | | | 13+78.84 | | 6 | 9 | 50 | | 1 | | | | | 1 | | | 1 | | | | | | | | | |
| -L- | 13+07.45 | 13+88.70 | LT | 87.5 | | | | 13+88.70 | 6 | 9 | | 50 | | 1 | | | | 1 | | | 1 | | | | | | | | | |
| -L- | 14+66.30 | 15+72.55 | RT | 112.5 | | | | 14+66.30 | 6 | 9 | | 50 | | 1 | | | | 1 | | | 1 | | | | | | | | | |
| -L- | 14+76.16 | 15+69.91 | LT | 100.0 | | | 14+76.16 | | 6 | 9 | 50 | | 1 | | | | | 1 | | | 1 | | | | | | | | | |
| | | | | | | | | | | | | | | | | | | | | | | | | | | | | | | |
| | LESS ANCHOR DEDUCTIONS | | | | | | | | | | | | | | | | | | | | | | | | | | | | | |
| | | | | | | | | | | | | | | | | | | | | | | | | | | | | | | |
| | | | | | | | | | | | | | | | | | | | | | | | | | | | | | | |
| | TYPE 350, TL-3 | 4 @ 50.00' | = | 200.00 | | | | | | | | | | | | | | | | | | | | | | | | | | |
| | TYPE III | 4 @ 18.75' | = | 75.00 | | | | | | | | | | | | | | | | | | | | | | | | | | |
| | | | | | | | | | | | | | | | | | | | | | | | | | | | | | | |
| | | | TOTAL | 112.5 | | | | | | | | | | | | | | 4 | | | 4 | | | | | | | | | |
| | | | | | | | | | | | | | | | | | | | | | | | | | | | | | | |
| | | | SAY | 112.5 | | | | | | | | | | | | | | | | | | | | | | | | | | |
| | | | | | | | | | | | | | | | | | | | | | | | | | | | | | | |
| | (5 ADDITIONAL GUARDRAIL POST) | | | | | | | | | | | | | | | | | | | | | | | | | | | | | |
| | | | | | | | | | | | | | | | | | | | | | | | | | | | | | | |

REVISIONS

$$DATE$$
$$TIME$$
$$DGN$$

# PLAN

HNTB NORTH CAROLINA, P.C.
343 E. Six Forks Road, Suite 200
Raleigh, North Carolina 27609
NC License No: C-1554

| PROJECT REFERENCE NO. | SHEET NO. |
|---|---|
| 17BP.2.R.19 | 4 |
| R/W SHEET NO. | |

ROADWAY DESIGN ENGINEER: NORTH CAROLINA PROFESSIONAL SEAL 032 ENGINEER FRANCIS A. ROSA 6/14/13

HYDRAULICS ENGINEER: NORTH CAROLINA PROFESSIONAL SEAL 3764 ENGINEER JAMES A. BARRS 6/14/13

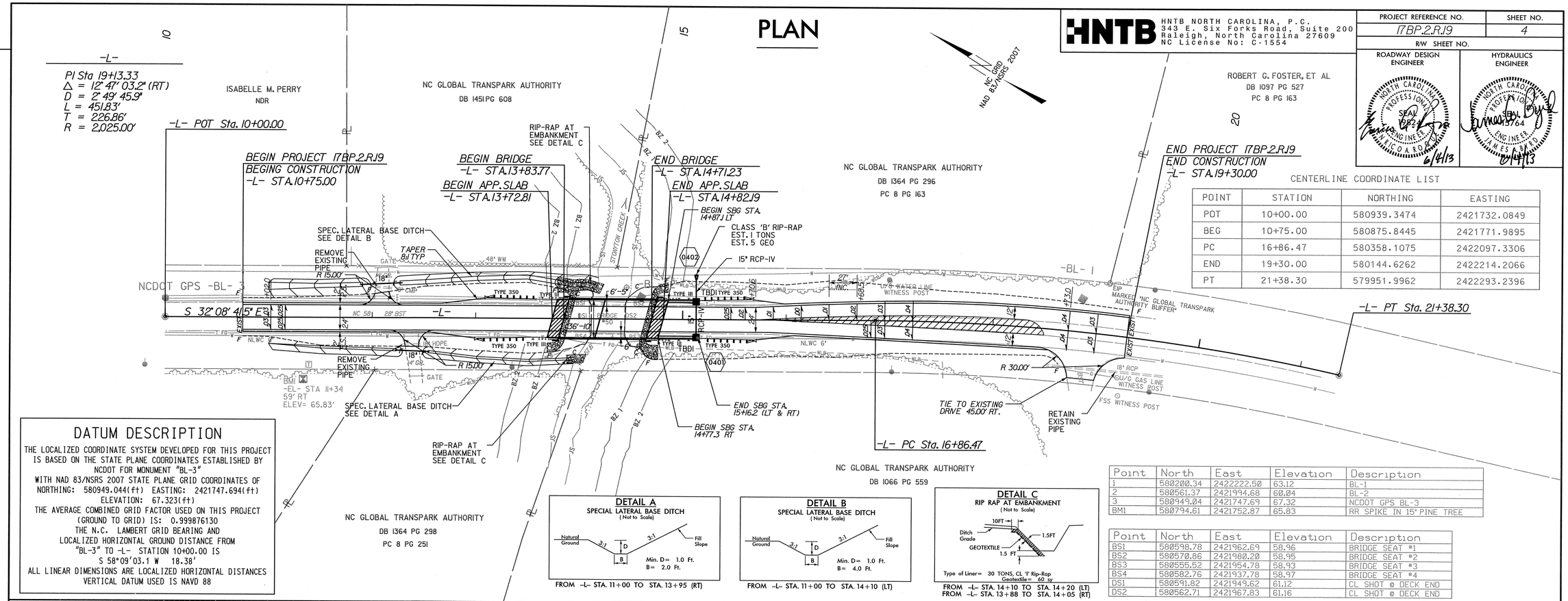


CENTERLINE COORDINATE LIST

| POINT | STATION | NORTHING | EASTING |
|---|---|---|---|
| POT | 10+00.00 | 580939.3474 | 2421732.0849 |
| BEG | 10+75.00 | 580875.8445 | 2421771.9895 |
| PC | 16+86.47 | 580358.1075 | 2422097.3306 |
| END | 19+30.00 | 580144.6262 | 2422214.2066 |
| PT | 21+38.30 | 579951.9962 | 2422293.2396 |

## DATUM DESCRIPTION

THE LOCALIZED COORDINATE SYSTEM DEVELOPED FOR THIS PROJECT IS BASED ON THE STATE PLANE COORDINATES ESTABLISHED BY NCDOT FOR MONUMENT "BL-3"
WITH NAD 83/NSRS 2007 STATE PLANE GRID COORDINATES OF
NORTHING: 580949.044(ft) EASTING: 2421747.694(ft)
ELEVATION: 67.323(ft)
THE AVERAGE COMBINED GRID FACTOR USED ON THIS PROJECT (GROUND TO GRID) IS: 0.999876130
THE N.C. LAMBERT GRID BEARING AND LOCALIZED HORIZONTAL GROUND DISTANCE FROM "BL-3" TO -L- STATION 10+00.00 IS S 58°09'03.1 W 18.38'
ALL LINEAR DIMENSIONS ARE LOCALIZED HORIZONTAL DISTANCES
VERTICAL DATUM USED IS NAVD 88




FROM -L- STA. 11+00 TO STA. 13+95 (RT)




FROM -L- STA. 11+00 TO STA. 14+10 (LT)




FROM -L- STA. 14+10 TO STA. 14+20 (LT)
FROM -L- STA. 13+88 TO STA. 14+05 (RT)

| Point | North | East | Elevation | Description |
|---|---|---|---|---|
| 1 | 580200.34 | 2422222.50 | 63.12 | BL-1 |
| 2 | 580561.37 | 2421994.68 | 60.04 | BL-2 |
| 3 | 580949.04 | 2421747.69 | 67.32 | NCDOT GPS BL-3 |
| BM1 | 580794.61 | 2421752.87 | 65.83 | RR SPIKE IN 15" PINE TREE |

| Point | North | East | Elevation | Description |
|---|---|---|---|---|
| BS1 | 580598.78 | 2421962.69 | 58.96 | BRIDGE SEAT #1 |
| BS2 | 580570.86 | 2421980.20 | 58.95 | BRIDGE SEAT #2 |
| BS3 | 580555.52 | 2421954.78 | 58.93 | BRIDGE SEAT #3 |
| BS4 | 580582.76 | 2421937.78 | 58.97 | BRIDGE SEAT #4 |
| DS1 | 580591.82 | 2421949.62 | 61.12 | CL SHOT @ DECK END |
| DS2 | 580562.71 | 2421967.83 | 61.16 | CL SHOT @ DECK END |

# PROFILE

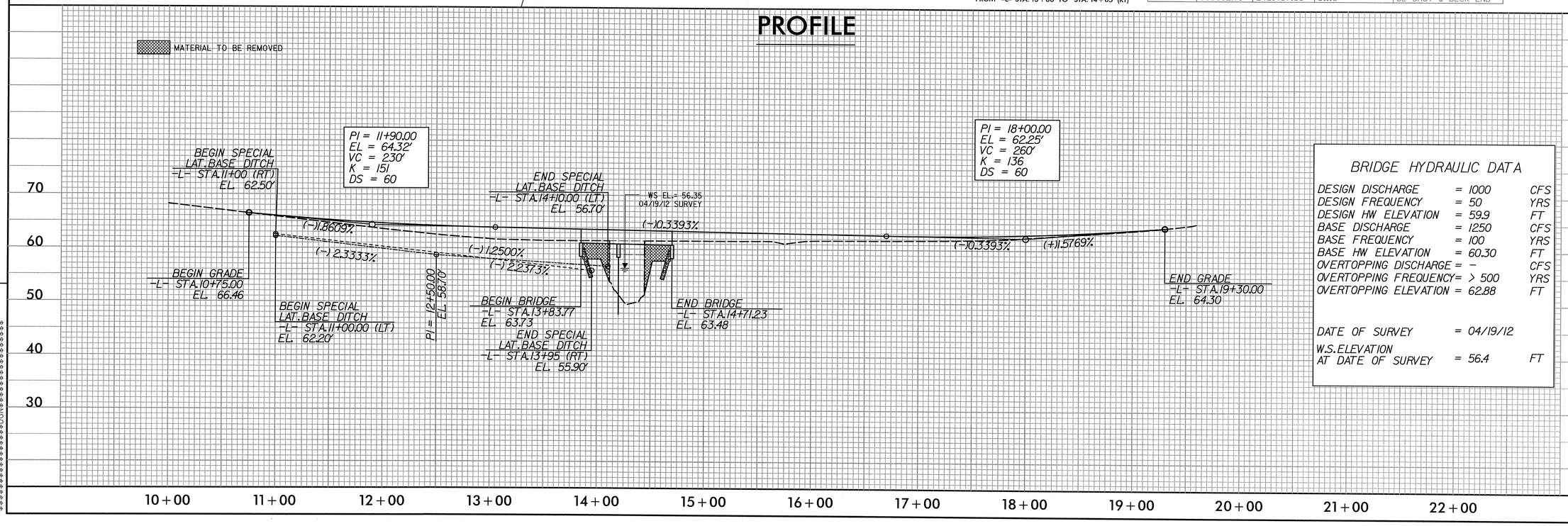


## BRIDGE HYDRAULIC DATA

| | | |
|---|---|---|
| DESIGN DISCHARGE | = 1000 | CFS |
| DESIGN FREQUENCY | = 50 | YRS |
| DESIGN HW ELEVATION | = 59.9 | FT |
| BASE DISCHARGE | = 1250 | CFS |
| BASE FREQUENCY | = 100 | YRS |
| BASE HW ELEVATION | = 60.30 | FT |
| OVERTOPPING DISCHARGE | = - | CFS |
| OVERTOPPING FREQUENCY | = > 500 | YRS |
| OVERTOPPING ELEVATION | = 62.88 | FT |
| DATE OF SURVEY | = 04/19/12 | |
| W.S. ELEVATION AT DATE OF SURVEY | = 56.4 | FT |

REVISIONS

$$$$DATE$$$$
$$$$SYSTIME$$$$
$$$$DGN$$$$

STATE OF NORTH CAROLINA
DIVISION OF HIGHWAYS

# TRANSPORTATION MANAGEMENT PLAN

# LENOIR COUNTY

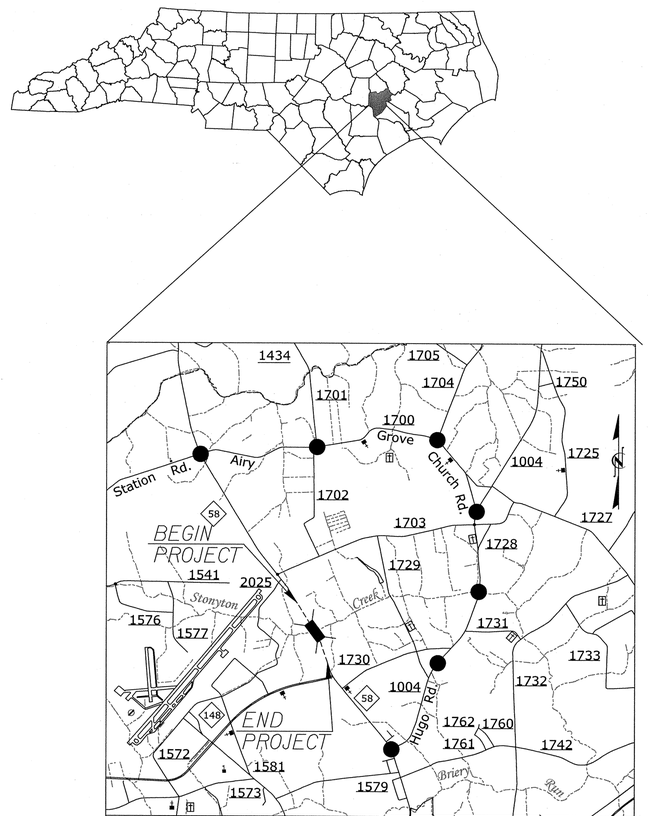


VICINITY MAP

## INDEX OF SHEETS

| SHEET NO. | TITLE |
|---|---|
| TMP-1 | TITLE SHEET WITH VICINTY MAP & INDEX OF SHEETS, LIST OF APPLICABLE ROADWAY STANDARD DRAWINGS, AND LEGEND |
| TMP-2 | PROJECT NOTES, DETOUR AND PLAN. |

## ROADWAY STANDARD DRAWINGS

THE FOLLOWING ROADWAY STANDARDS AS SHOWN IN "ROADWAY STANDARD DRAWINGS" PROJECT SERVICES UNIT - N.C. DEPARTMENT OF TRANSPORTATION - RALEIGH, N.C. DATED JAN 2012 ARE APPLICABLE TO THIS PROJECT AND BY REFERENCE HEREBY ARE CONSIDERED A PART OF THESE PLANS:

| STD. NO. | TITLE |
|---|---|
| 1101.11 | TRAFFIC CONTROL DESIGN TABLES |
| 1110.11 | STATIONARY WORK ZONE SIGNS |
| 1130.01 | DRUM |
| 1145.01 | BARRICADES |

## LEGEND

GENERAL

- DIRECTION OF TRAFFIC FLOW
- DIRECTION OF PEDESTRIAN TRAFFIC FLOW
- EXIST. PVMT.
- NORTH ARROW
- PROPOSED PVMT.
- WORK AREA

TRAFFIC CONTROL DEVICES

- BARRICADE (TYPE III)


HNTB
HNTB NORTH CAROLINA, P.C.
343 E. Six Forks Road, Suite 200
Raleigh, North Carolina 27609
NC License No: C-1554

R. B. EARLY, PE — *TRAFFIC CONTROL PROJECT ENGINEER*
R. B. EARLY, PE — *TRAFFIC CONTROL PROJECT DESIGN ENGINEER*
J. A. PHILLIPS — *TRAFFIC CONTROL DESIGN ENGINEER*


*APPROVED:* Rhonda B. Early
*DATE:* 3-25-13

*SEAL*

NORTH CAROLINA PROFESSIONAL SEAL 023521 ENGINEER RHONDA B. EARLY

*WORK ZONE SAFETY & MOBILITY*
*"from the MOUNTAINS to the COAST"*


*N.C.D.O.T. WORK ZONE TRAFFIC CONTROL*
*1561 MAIL SERVICE CENTER (MSC) RALEIGH, NC 27699-1561*
*750 N. GREENFIELD PARKWAY, GARNER, NC 27529 (DELIVERY)*
*PHONE: (919) 773-2800 FAX: (919) 771-2745*

*STEVEN HAMILTON, PE* — *DIVISION TRAFFIC ENGINEER*


DIVISION OF HIGHWAYS * STATE OF NORTH CAROLINA * DEPARTMENT OF TRANSPORTATION * WORK ZONE TRAFFIC CONTROL

SHEET NO.
TMP-1

17BP.2.R.19

TIP PROJECT:

10:27:14 AM
...\TCP_BR50_to_TCP_01_title.dgn
$$$$USERNAME$$$$

HNTB
HNTB NORTH CAROLINA, P.C.
343 E. Six Forks Road, Suite 200
Raleigh, North Carolina 27609
NC License No: C-1554

| PROJ. REFERENCE NO. | SHEET NO. |
|---|---|
| 17BP.2.R.19 | TMP-2 |

# GENERAL NOTES

IMPLEMENT TRAFFIC CONTROL IN ACCORDANCE WITH THE ROADWAY STANDARD DRAWINGS LISTED ON TMP-1.

CHANGES MAY BE REQUIRED WHEN PHYSICAL DIMENSIONS IN THE DETAIL DRAWINGS, STANDARD DETAILS AND ROADWAY DETAILS ARE NOT ATTAINABLE TO MEET FIELD CONDITIONS, OR RESULT IN DUPLICATE, OR UNDESIRED OVERLAPPING, OF DEVICES. MODIFICATIONS MAY INCLUDE: MOVING, SUPPLEMENTING, COVERING OR REMOVAL OF DEVICES, AS DIRECTED BY THE ENGINEER.

STATE FORCES WILL INSTALL AND MAINTAIN THE PROJECT DETOUR AND THE TYPE III BARRICADES AT THE PROJECT LIMITS.
STATE FORCES WILL INSTALL PAINT AND MARKERS ON THE FINISHED PROJECT.
CALL JIM EVANS AT 252-830-3493 FOR COORDINATION.

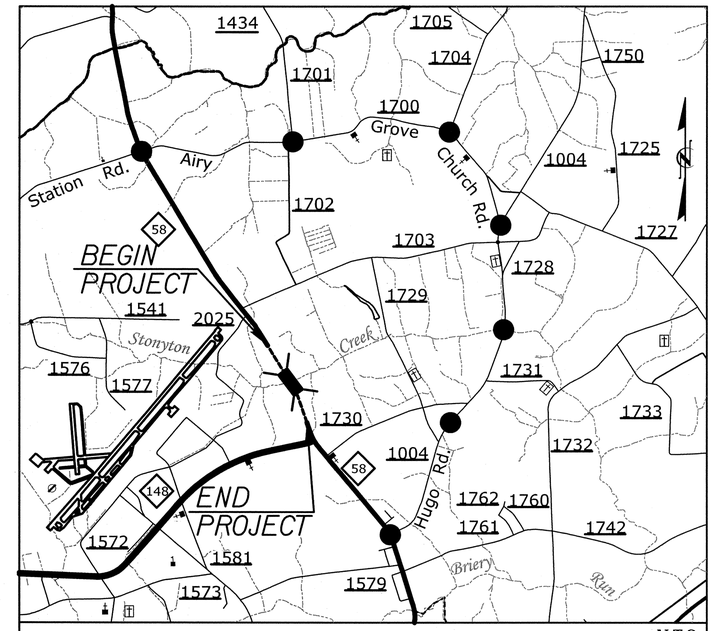


N.T.S.

**VICINITY MAP** ●●● DETOUR ROUTE

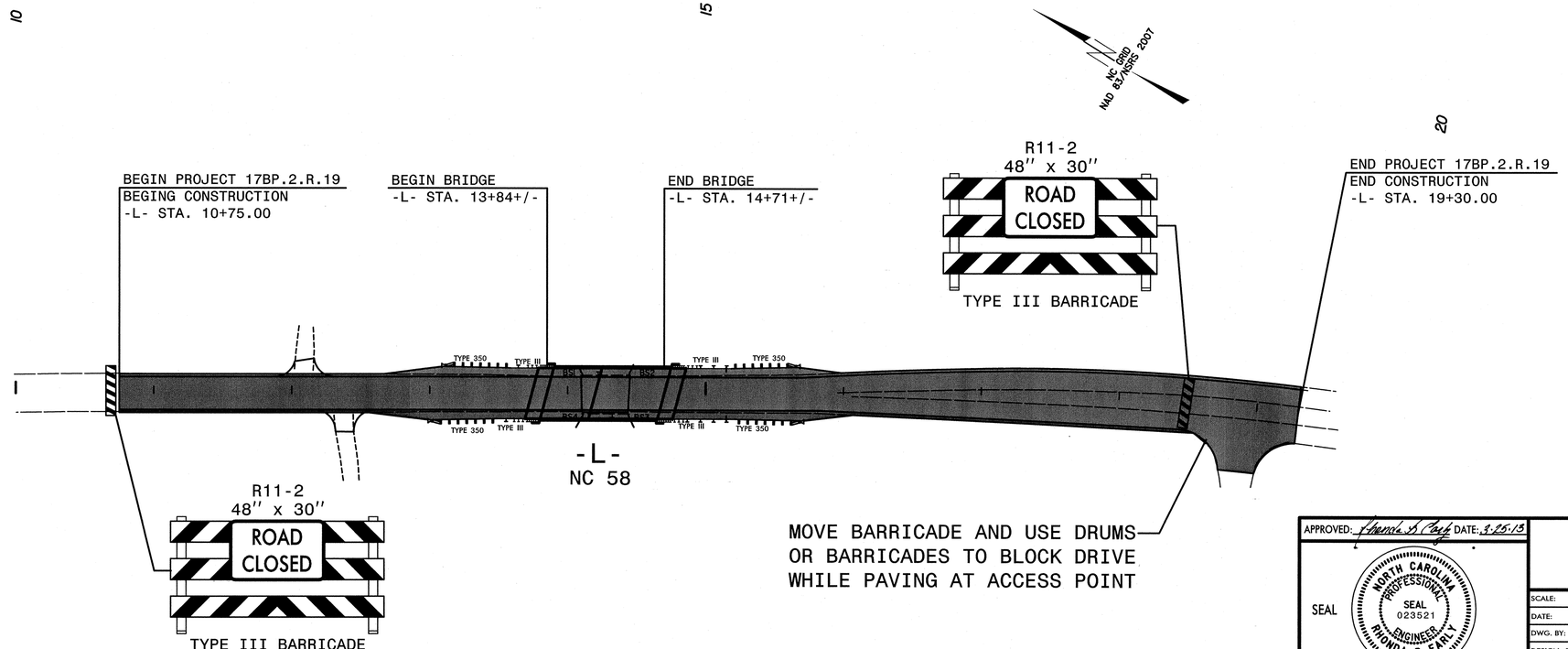


APPROVED: Rhonda B. Early DATE: 9.25.13

SEAL

NORTH CAROLINA PROFESSIONAL SEAL 023521 ENGINEER RHONDA B. EARLY

## PROJECT NOTES

| | |
|---|---|
| SCALE: | NONE |
| DATE: | 12/5/12 |
| DWG. BY: | JAP |
| DESIGN BY: | JAP |
| REVIEWED BY: | RBE |

REVISIONS

CADD FILE

10:28:47 AM
...\TCP\BR50_TC_TCP_detour.dgn
$$$$USERNAME$$$$

TIP PROJECT: 17BP.2.R.19

| STATE | STATE PROJECT REFERENCE NO. | SHEET NO. | TOTAL SHEETS |
|---|---|---|---|
| N.C. | 17BP.2.R.19 | EC-1 | 5 |

| STATE PROJ. NO. | F.A. PROJ. NO. | DESCRIPTION |
|---|---|---|
| | | |
| | | |
| | | |
| | | |
| | | |

# STATE OF NORTH CAROLINA
# DIVISION OF HIGHWAYS

## PLAN FOR PROPOSED
# HIGHWAY EROSION CONTROL

***LOCATION: LENOIR COUNTY BRIDGE NO. 050 OVER STONEYTON CREEK ON N.C. 58***

***TYPE OF WORK: BRIDGE REPLACEMENT***

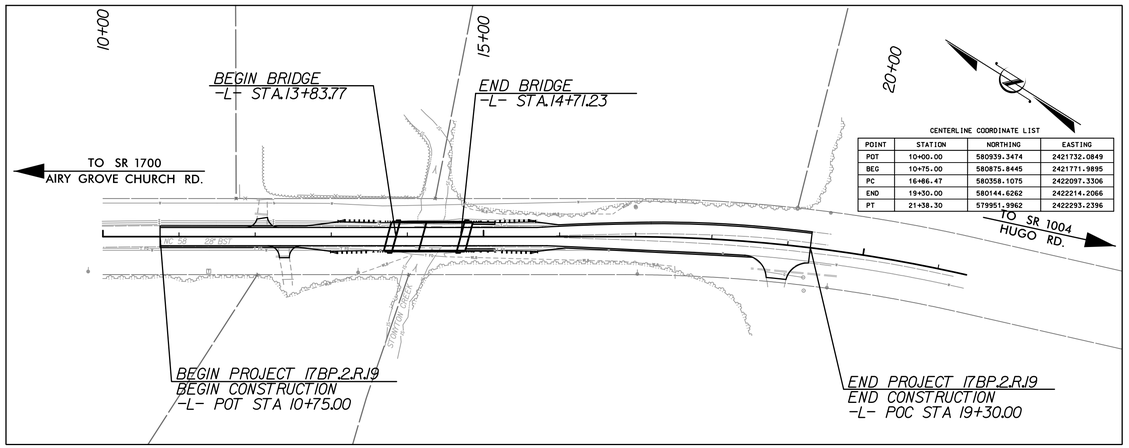


CENTERLINE COORDINATE LIST

| POINT | STATION | NORTHING | EASTING |
|---|---|---|---|
| POT | 10+00.00 | 580939.3474 | 2421732.0849 |
| BEG | 10+75.00 | 580875.8445 | 2421771.9895 |
| PC | 16+86.47 | 580358.1075 | 2422097.3306 |
| END | 19+30.00 | 580144.6262 | 2422214.2066 |
| PT | 21+38.30 | 579951.9962 | 2422293.2396 |

## EROSION AND SEDIMENT CONTROL MEASURES

| Std. # | Description | Symbol |
|---|---|---|
| 1630.03 | Temporary Silt Ditch | TSD |
| 1630.05 | Temporary Diversion | TD |
| 1605.01 | Temporary Silt Fence | |
| 1606.01 | Special Sediment Control Fence | |
| 1622.01 | Temporary Berms and Slope Drains | |
| | Silt Basin Type B | |
| 1633.01 | Temporary Rock Silt Check Type-A | |
| | Temporary Rock Silt Check Type-A with Matting and Polyacrylamide (PAM) | |
| | Temporary Rock Silt Check Type-B | |
| | Wattle / Coir Fiber Wattle | |
| | Wattle / Coir Fiber Wattle with Polyacrylamide (PAM) | |
| 1634.01 | Temporary Rock Sediment Dam Type-A | |
| 1634.02 | Temporary Rock Sediment Dam Type-B | |
| 1635.01 | Rock Pipe Inlet Sediment Trap Type-A | |
| 1635.02 | Rock Pipe Inlet Sediment Trap Type-B | |
| 1630.04 | Stilling Basin | |
| 1630.06 | Special Stilling Basin | |
| | Rock Inlet Sediment Trap: | |
| 1632.01 | Type A | A |
| 1632.02 | Type B | B |
| 1632.03 | Type C | C |
| | Skimmer Basin | |
| | Tiered Skimmer Basin | |
| | Infiltration Basin | |

***GRAPHIC SCALE***

0
PLANS

0
PROFILE (HORIZONTAL)

0
PROFILE (VERTICAL)

***ROADSIDE ENVIRONMENTAL UNIT***
***DIVISION OF HIGHWAYS***
***STATE OF NORTH CAROLINA***

THESE EROSION AND SEDIMENT CONTROL PLANS COMPLY WITH THE REGULATIONS SET FORTH BY THE NCG-010000 GENERAL CONSTRUCTION PERMIT EFFECTIVE AUGUST 3, 2011 ISSUED BY THE NORTH CAROLINA DEPARTMENT OF ENVIRONMENT AND NATURAL RESOURCES DIVISION OF WATER QUALITY.

*Prepared In the Office of:*


HNTB
HNTB NORTH CAROLINA, P.C.
343 E. Six Forks Road, Suite 200
Raleigh, North Carolina 27609
NC License No: C-1554


***2012 STANDARD SPECIFICATIONS***

BENJAMIN J. HENEGAR, E.I
EROSION CONTROL
LEVEL III-A
CERTIFICATION #641

**Roadway Standard Drawings**

The following roadway english standards as appear in "Roadway Standard Drawings"- Roadway Design Unit - N. C. Department of Transportation - Raleigh, N. C., dated January 2012 and the latest revison thereto are applicable to this project and by reference hereby are considered a part of these plans.

| | | | |
|---|---|---|---|
| 1604.01 | Railroad Erosion Control Detail | 1632.01 | Rock Inlet Sediment Trap Type A |
| 1605.01 | Temporary Silt Fence | 1632.02 | Rock Inlet Sediment Trap Type B |
| 1606.01 | Special Sediment Control Fence | 1632.03 | Rock Inlet Sediment Trap Type C |
| 1607.01 | Gravel Construction Entrance | 1633.01 | Temporary Rock Silt Check Type A |
| 1622.01 | Temporary Berms and Slope Drains | 1633.02 | Temporary Rock Silt Check Type B |
| 1630.01 | Riser Basin | 1634.01 | Temporary Rock Sediment Dam Type A |
| 1630.02 | Silt Basin Type B | 1634.02 | Temporary Rock Sediment Dam Type B |
| 1630.03 | Temporary Silt Ditch | 1635.01 | Rock Pipe Inlet Sediment Trap Type A |
| 1630.04 | Stilling Basin | 1635.02 | Rock Pipe Inlet Sediment Trap Type B |
| 1630.05 | Temporary Diversion | 1640.01 | Coir Fiber Baffle |
| 1630.06 | Special Stilling Basin | 1645.01 | Temporary Stream Crossing |
| 1631.01 | Matting Installation | | |


9:20:23 AM
$$$$USERNAME$$$$

| PROJECT REFERENCE NO. | SHEET NO. |
|---|---|
| 17BP.2.R.19 | EC-2 |

# COIR FIBER WATTLE DETAIL

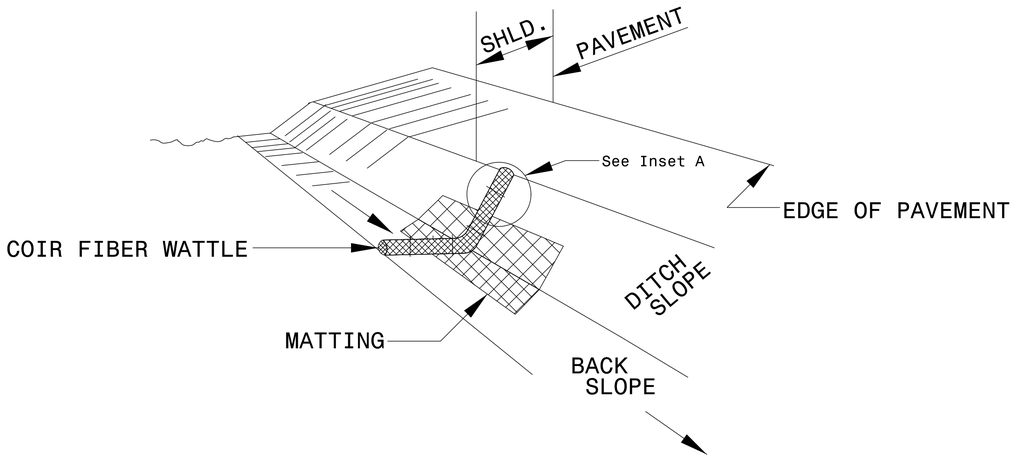


**ISOMETRIC VIEW**

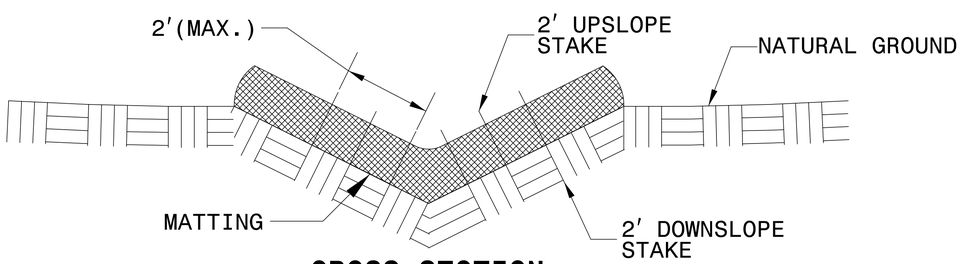


**CROSS SECTION VEE DITCH**

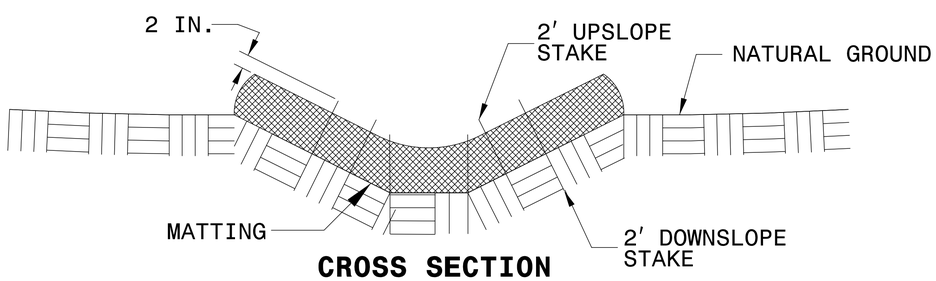


**CROSS SECTION TRAPEZOIDAL DITCH**

NOTES:

USE MINIMUM 12 IN. DIAMETER COIR FIBER (COCONUT FIBER) WATTLE.

USE 2 FT. WOODEN STAKES WITH A 2 IN. BY 2 IN. NOMINAL CROSS SECTION.

ONLY INSTALL WATTLE(S) TO A HEIGHT IN DITCH SO FLOW WILL NOT WASH AROUND WATTLE AND SCOUR DITCH SLOPES AND AS DIRECTED.

INSTALL A MINIMUM OF 2 UPSLOPE STAKES AND 4 DOWNSLOPE STAKES AT AN ANGLE TO WEDGE WATTLE TO BOTTOM OF DITCH.

PROVIDE STAPLES MADE OF 0.125 IN. DIAMETER STEEL WIRE FORMED INTO A U SHAPE NOT LESS THAN 12″ IN LENGTH.

INSTALL STAPLES APPROXIMATELY EVERY 1 LINEAR FOOT ON BOTH SIDES OF WATTLE AND AT EACH END TO SECURE IT TO THE SOIL.

INSTALL MATTING IN ACCORDANCE WITH SECTION 1631 OF THE STANDARD SPECIFICATIONS.

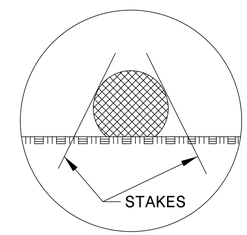


INSET A

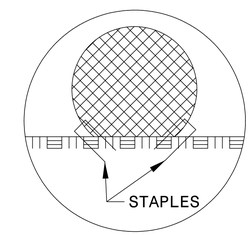


INSET B

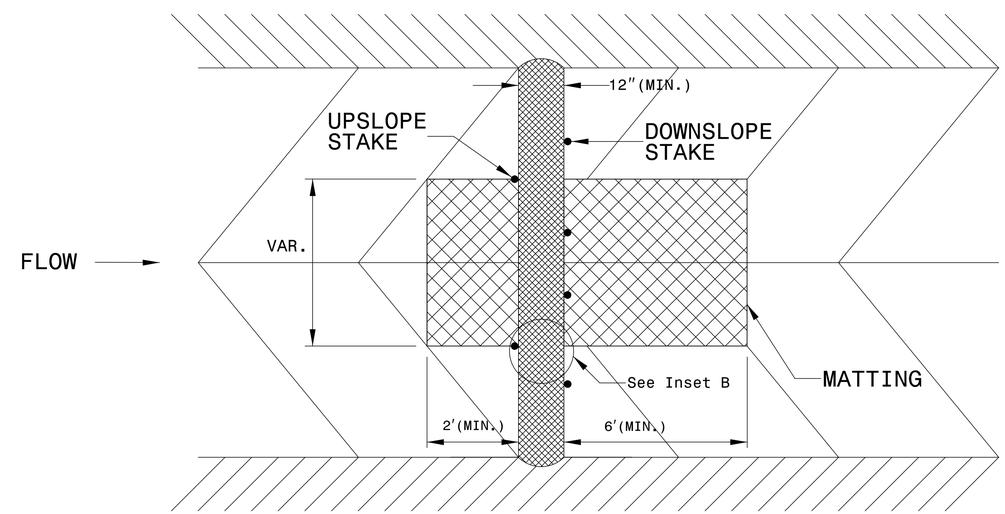


**TOP VIEW**

6/2/99

9:20:50 AM
1:30:00 PM
$$$$USERNAME$$$$
ec_detail.dgn

| PROJECT REFERENCE NO. | SHEET NO. |
|---|---|
| 17BP.2.R.19 | EC-3 |

# SILT FENCE COIR FIBER WATTLE BREAK DETAIL

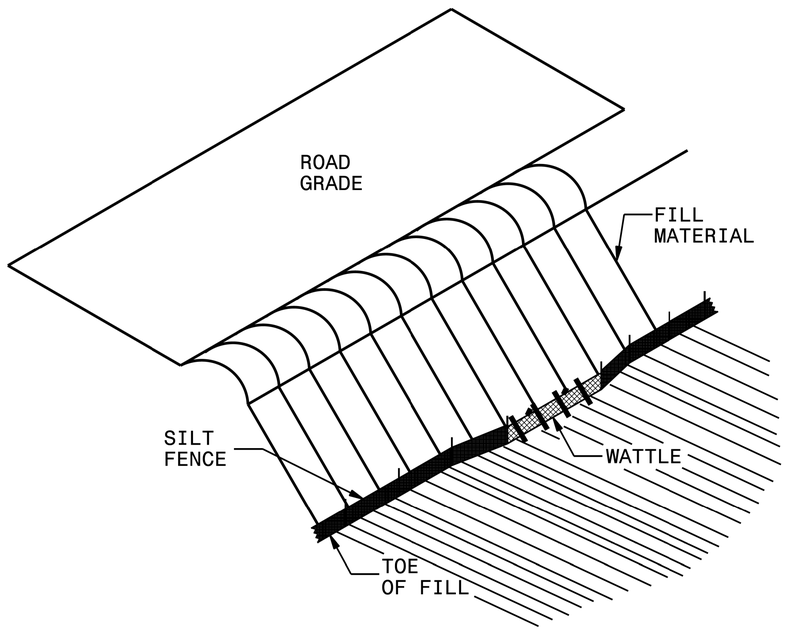


**ISOMETRIC VIEW**

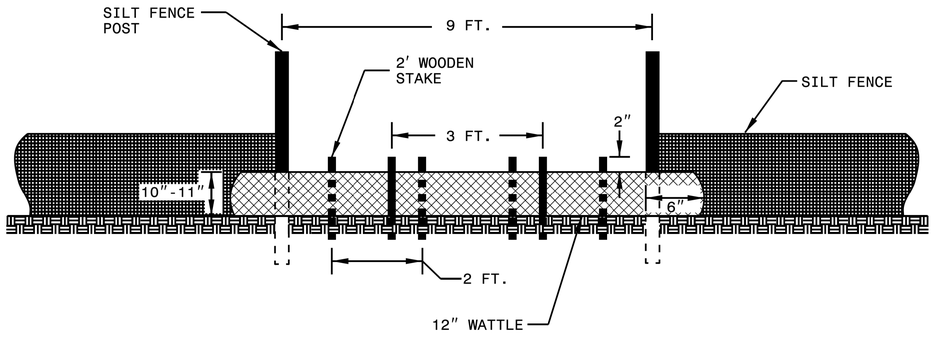


**VIEW FROM SLOPE**

NOTES:

USE MINIMUM 12 IN. DIAMETER COIR FIBER (COCONUT FIBER) WATTLE AND LENGTH OF 10 FT.

EXCAVATE A 1 TO 2 INCH TRENCH FOR WATTLE TO BE PLACED.

DO NOT PLACE WATTLE ON TOE OF SLOPE.

USE 2 FT. WOODEN STAKES WITH A 2 IN. BY 2 IN. NOMINAL CROSS SECTION.

INSTALL A MINIMUM OF 2 UPSLOPE STAKES AND 4 DOWNSLOPE STAKES AT AN ANGLE TO WEDGE WATTLE TO GROUND.

PROVIDE STAPLES MADE OF 0.125 IN. DIAMETER STEEL WIRE FORMED INTO A U SHAPE NOT LESS THAN 12" IN LENGTH.

INSTALL STAPLES APPROXIMATELY EVERY 1 LINEAR FOOT ON BOTH SIDES OF WATTLE AND AT EACH END TO SECURE IT TO THE SOIL.

WATTLE INSTALLATION CAN BE ON OUTSIDE OF THE SILT FENCE AS DIRECTED.

INSTALL TEMPORARY SILT FENCE IN ACCORDANCE WITH SECTION 1605 OF THE STANDARD SPECIFICATIONS.

INSET A

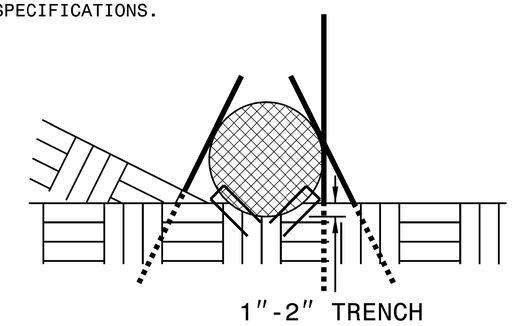


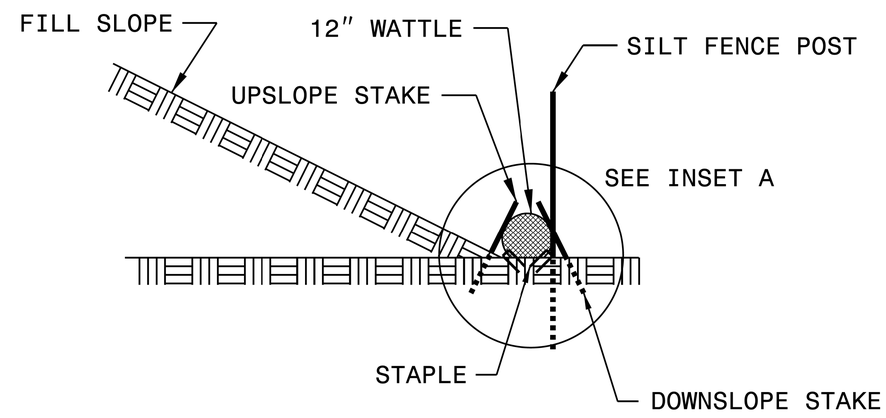


**SIDE VIEW**

| PROJECT REFERENCE NO. | SHEET NO. |
|---|---|
| 17BP.2.R.19 | EC-4 |

DIVISION OF HIGHWAYS
STATE OF NORTH CAROLINA

# SOIL STABILIZATION TIMEFRAMES

| SITE DESCRIPTION | STABILIZATION TIME | TIMEFRAME EXCEPTIONS |
|---|---|---|
| PERIMETER DIKES, SWALES, DITCHES AND SLOPES | 7 DAYS | NONE |
| HIGH QUALITY WATER (HQW) ZONES | 7 DAYS | NONE |
| SLOPES STEEPER THAN 3:1 | 7 DAYS | IF SLOPES ARE 10' OR LESS IN LENGTH AND ARE NOT STEEPER THAN 2:1, 14 DAYS ARE ALLOWED. |
| SLOPES 3:1 OR FLATTER | 14 DAYS | 7 DAYS FOR SLOPES GREATER THAN 50' IN LENGTH. |
| ALL OTHER AREAS WITH SLOPES FLATTER THAN 4:1 | 14 DAYS | NONE, EXCEPT FOR PERIMETERS AND HQW ZONES. |

## MATTING FOR EROSION CONTROL

| SHEET NO. | LINE | FROM STATION | TO STATION | SIDE | ESTIMATE (SY) | REMARKS |
|---|---|---|---|---|---|---|
| EC-5 | -L- | 11+00 | 14+10 | LT | 700 | INSTALL IN PROP. DITCH |
| EC-5 | -L- | 11+00 | 13+95 | RT | 490 | INSTALL IN PROP. DITCH |
| | | | | | | |
| | | | | | | |
| | | | | | | |
| | | | | | | |
| | | | | SUBTOTAL | 1190 | |
| | | | | MISCELLANEOUS MATTING | 0 | |
| | | | | TOTAL | 1190 | |
| | | | | SAY | 1190 | |

HNTB NORTH CAROLINA, P.C.
343 E. Six Forks Road, Suite 200
Raleigh, North Carolina 27609
NC License No: C-1554

| PROJECT REFERENCE NO. | SHEET NO. |
|---|---|
| 17BP.2.R.19 | EC-5 |
| R/W SHEET NO. | |

BENJAMIN J. HENEGAR E.I.
EROSION CONTROL
LEVEL III-A
CERTIFICATION #641

REVISIONS

# PLAN

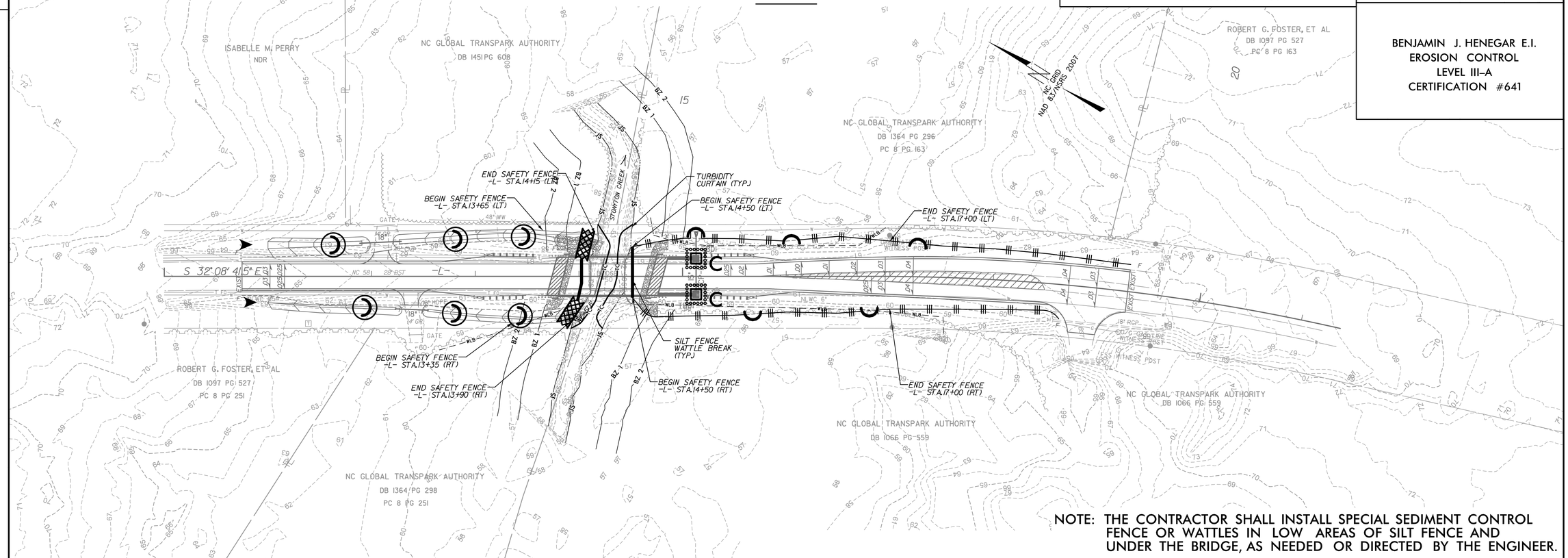


NOTE: THE CONTRACTOR SHALL INSTALL SPECIAL SEDIMENT CONTROL FENCE OR WATTLES IN LOW AREAS OF SILT FENCE AND UNDER THE BRIDGE, AS NEEDED OR DIRECTED BY THE ENGINEER.

# PROFILE

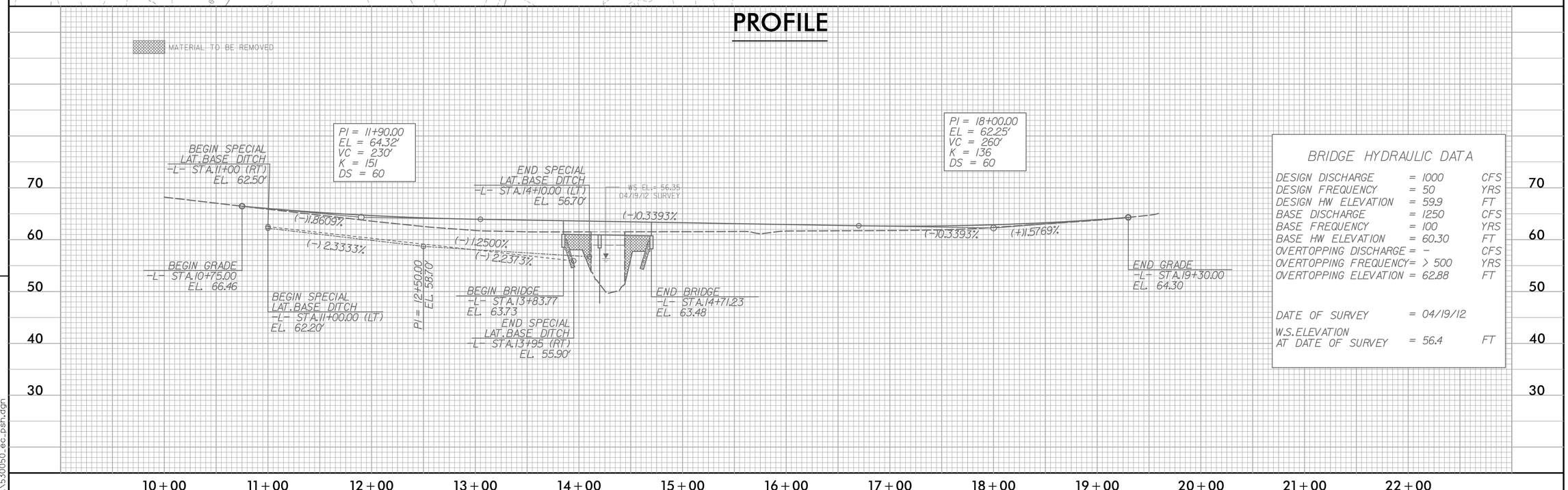


BRIDGE HYDRAULIC DATA

| | | |
|---|---|---|
| DESIGN DISCHARGE | = 1000 | CFS |
| DESIGN FREQUENCY | = 50 | YRS |
| DESIGN HW ELEVATION | = 59.9 | FT |
| BASE DISCHARGE | = 1250 | CFS |
| BASE FREQUENCY | = 100 | YRS |
| BASE HW ELEVATION | = 60.30 | FT |
| OVERTOPPING DISCHARGE | = - | CFS |
| OVERTOPPING FREQUENCY | = > 500 | YRS |
| OVERTOPPING ELEVATION | = 62.88 | FT |
| DATE OF SURVEY | = 04/19/12 | |
| W.S. ELEVATION AT DATE OF SURVEY | = 56.4 | FT |

6/4/2013
9:40:25 AM
...\530050_ec_psh.dgn

5/14/99

| PROJECT REFERENCE NO. | SHEET NO. |
|---|---|
| 17BP.2.R.19 | P-1 |
| R/W SHEET NO. | |

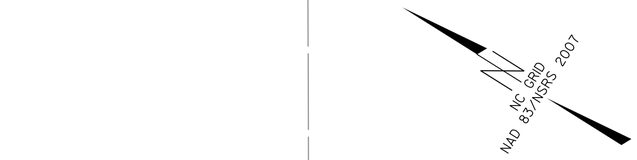


ISABELLE M. PERRY
NDR

NC GLOBAL TRANSPARK AUTHORITY
DB 1451 PG 608

NC GLOBAL TRANSPARK AUTHORITY
DB 1364 PG 296
PC 8 PG 163

ROBERT G. FOSTER, ET AL
DB 1097 PG 527
PC 8 PG 163

ROBERT G. FOSTER, ET AL
DB 1097 PG 527
PC 8 PG 251

NC GLOBAL TRANSPARK AUTHORITY
DB 1066 PG 559

NC GLOBAL TRANSPARK AUTHORITY
DB 1066 PG 559

NC GLOBAL TRANSPARK AUTHORITY
DB 1364 PG 298
PC 8 PG 251

**W1**
PERMANENT WETLAND IMPACTS = 0.03 Ac /1165 SF
MECHANIZED CLEARING IN WETLANDS = <0.01 Ac /243 SF
PERMANENT STREAM IMPACTS = 0 LF
TEMPORARY STREAM IMPACTS = 0 LF
BUFFER ZONE 1 IMPACTS = 295 SF
BUFFER ZONE 2 IMPACTS = 44 SF

**W2**
PERMANENT WETLAND IMPACTS = 0 Ac /0 SF
MECHANIZED CLEARING IN WETLANDS = 0 Ac /0 SF
PERMANENT STREAM IMPACTS = 10 LF
TEMPORARY STREAM IMPACTS = 0 LF
BUFFER ZONE 1 IMPACTS = 750 SF
BUFFER ZONE 2 IMPACTS = 519 SF

**W3**
PERMANENT WETLAND IMPACTS = 0.01 Ac /451 SF
MECHANIZED CLEARING IN WETLANDS = <0.01 Ac /145 SF
PERMANENT STREAM IMPACTS = 9 LF
TEMPORARY STREAM IMPACTS = 0 LF
BUFFER ZONE 1 IMPACTS = 782 SF
BUFFER ZONE 2 IMPACTS = 509 SF

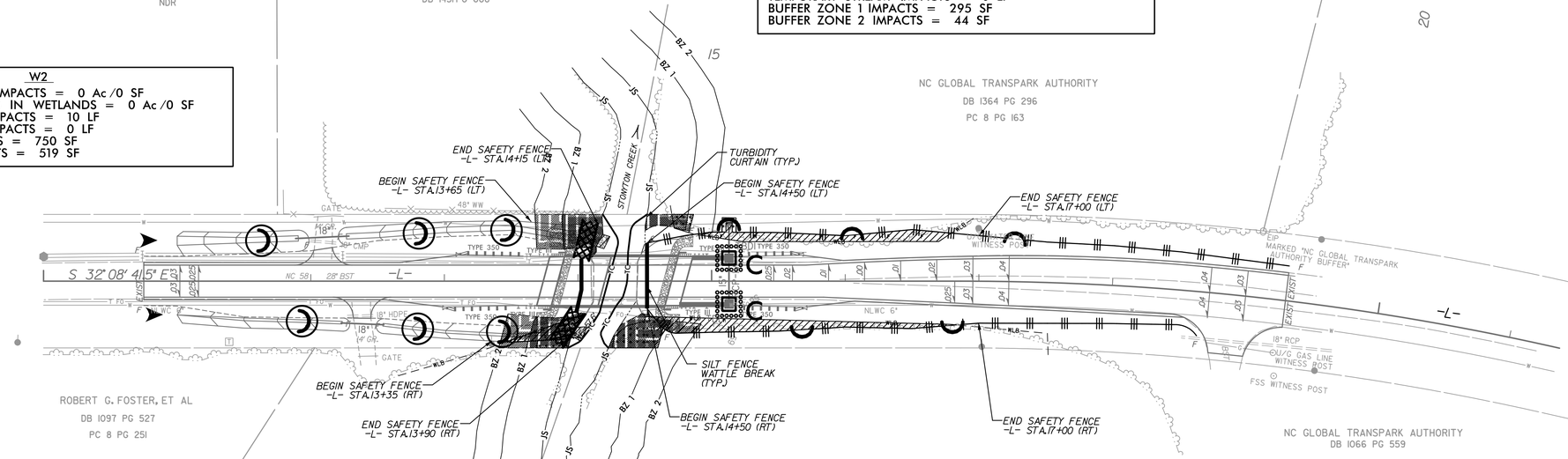


**DETAIL A**
SPECIAL LATERAL BASE DITCH
(Not to Scale)

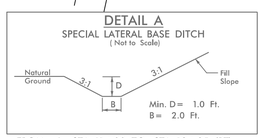


FROM -L- STA. 11+00 TO STA. 13+95 (RT)

**DETAIL B**
SPECIAL LATERAL BASE DITCH
(Not to Scale)

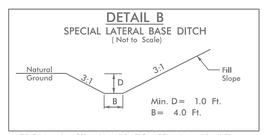


FROM -L- STA. 11+00 TO STA. 14+10 (LT)

**DETAIL C**
RIP RAP AT EMBANKMENT
(Not to Scale)

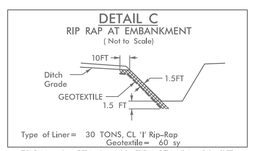


Type of Liner= 30 TONS, CL 'I' Rip-Rap
Geotextile= 60 sy

FROM -L- STA. 14+10 TO STA. 14+20 (LT)
FROM -L- STA. 13+88 TO STA. 14+05 (RT)

**W4**
PERMANENT WETLAND IMPACTS = 0.03 Ac /1482 SF
MECHANIZED CLEARING IN WETLANDS = 0.01 Ac /629 SF
PERMANENT STREAM IMPACTS = 0 LF
TEMPORARY STREAM IMPACTS = 0 LF
BUFFER ZONE 1 IMPACTS = 795 SF
BUFFER ZONE 2 IMPACTS = 196 SF

**IMPACT SUMMARY:**
404 WETLAND IMPACTS = 0.09 AC
PERMANENT STREAM IMPACTS = 19 LF
TEMPORARY STREAM IMPACT = 0 LF
BUFFER ZONE 1 IMPACT = 2622 SF
BUFFER ZONE 2 IMPACT = 1268 SF

**LEGEND**

- ALLOWABLE IMPACTS ZONE 1
- ALLOWABLE IMPACTS ZONE 2
- DENOTES IMPACTS IN SURFACE WATER
- DENOTES FILL IN WETLAND
- DENOTES EXCAVATION IN WETLAND
- DENOTES MECHANIZED CLEARING

**NCDOT**
17BP.2.R.19 LENOIR COUNTY
REPLACE BRIDGE NO. 0050
NC HWY 58
OVER STONEYTON CREEK
BETWEEN SR 1700
AND SR 1004

SCALE: 1" = 50'
JUNE 3, 2013
FOR PERMITTING ONLY:
NOT FOR CONSTRUCTION

Note: Approximate quantities only. Unclassified Excavation, Borrow Excavation, Shoulder Borrow, Fine Grading, Clearing and Grubbing, Breaking of Existing Pavement, and Removal of Existing Pavement will be paid for at the contract lump sum price for "Grading."

STATE OF NORTH CAROLINA
DIVISION OF HIGHWAYS

# *CROSS–SECTION SUMMARY*

## *IN CUBIC YARDS*

NOTE: EMBANKMENT COLUMN DOES NOT INCLUDE BACKFILL FOR UNDERCUT

| STATION | UNCLASSIFIED EXCAVATION | EMBANK. | UNDERCUT |
|---|---|---|---|
| –L– STA. 10+50.00 | 0 | 0 | 0 |
| –L– STA. 11+00.00 | 3 | 1 | 0 |
| –L– STA. 11+50.00 | 14 | 10 | 0 |
| –L– STA. 12+00.00 | 30 | 35 | 0 |
| –L– STA. 12+50.00 | 43 | 83 | 0 |
| –L– STA. 13+00.00 | 43 | 157 | 0 |
| –L– STA. 13+50.00 | 38 | 216 | 0 |
| –L– STA. 14+00.00 | 165 | 104 | 0 |
| –L– STA. 14+50.00 | 95 | 0 | 0 |
| –L– STA. 15+00.00 | 171 | 74 | 0 |
| –L– STA. 15+50.00 | 0 | 171 | 0 |
| –L– STA. 16+00.00 | 0 | 125 | 0 |
| –L– STA. 16+50.00 | 0 | 100 | 0 |
| –L– STA. 17+00.00 | 0 | 83 | 0 |
| –L– STA. 17+50.00 | 0 | 49 | 0 |
| –L– STA. 18+00.00 | 0 | 32 | 0 |
| –L– STA. 18+50.00 | 3 | 18 | 0 |
| –L– STA. 19+00.00 | 12 | 8 | 0 |
| –L– STA. 19+50.00 | 6 | 1 | 0 |


02/03/98
$$$$$$$$SYSTIME$$$$
$$$$$$$$PROJNAME$$$$
$$$$$$$$USERNAME$$$$

| PROJ. REFERENCE NO. | SHEET NO. | TOTAL SHEETS |
|---|---|---|
| 17BP.2.R.19 | X-2 | 6 |

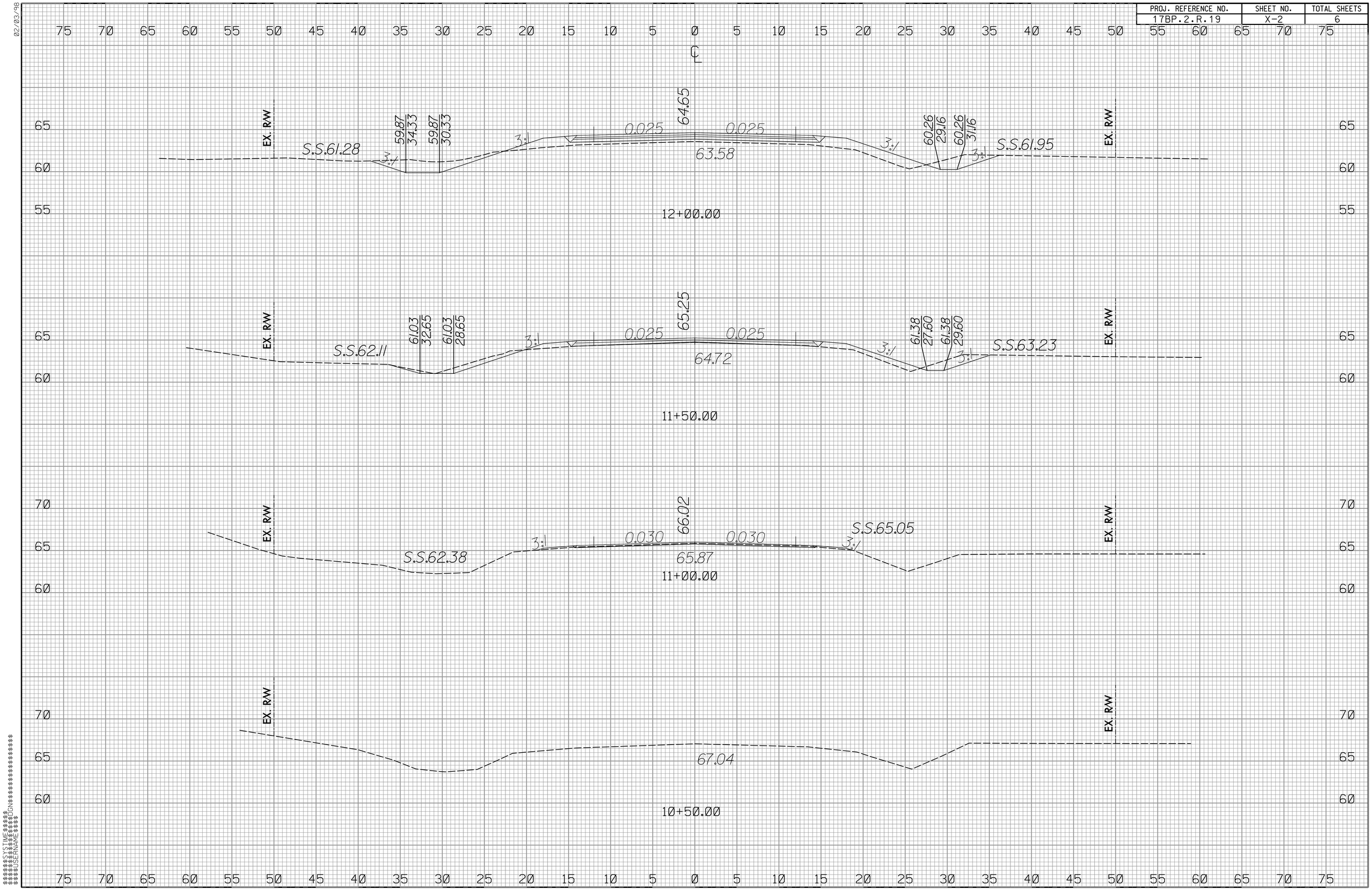


02/03/98
$$$$$$$$SYSTIME$$$$$$$$
$$$$$$$$$$$$$$$$$$$$DGN$$$$$$$$$$$$$$$$$$$$
$$$$$$$$USERNAME$$$$$$$$

| PROJ. REFERENCE NO. | SHEET NO. | TOTAL SHEETS |
|---|---|---|
| 17BP.2.R.19 | X-3 | 6 |

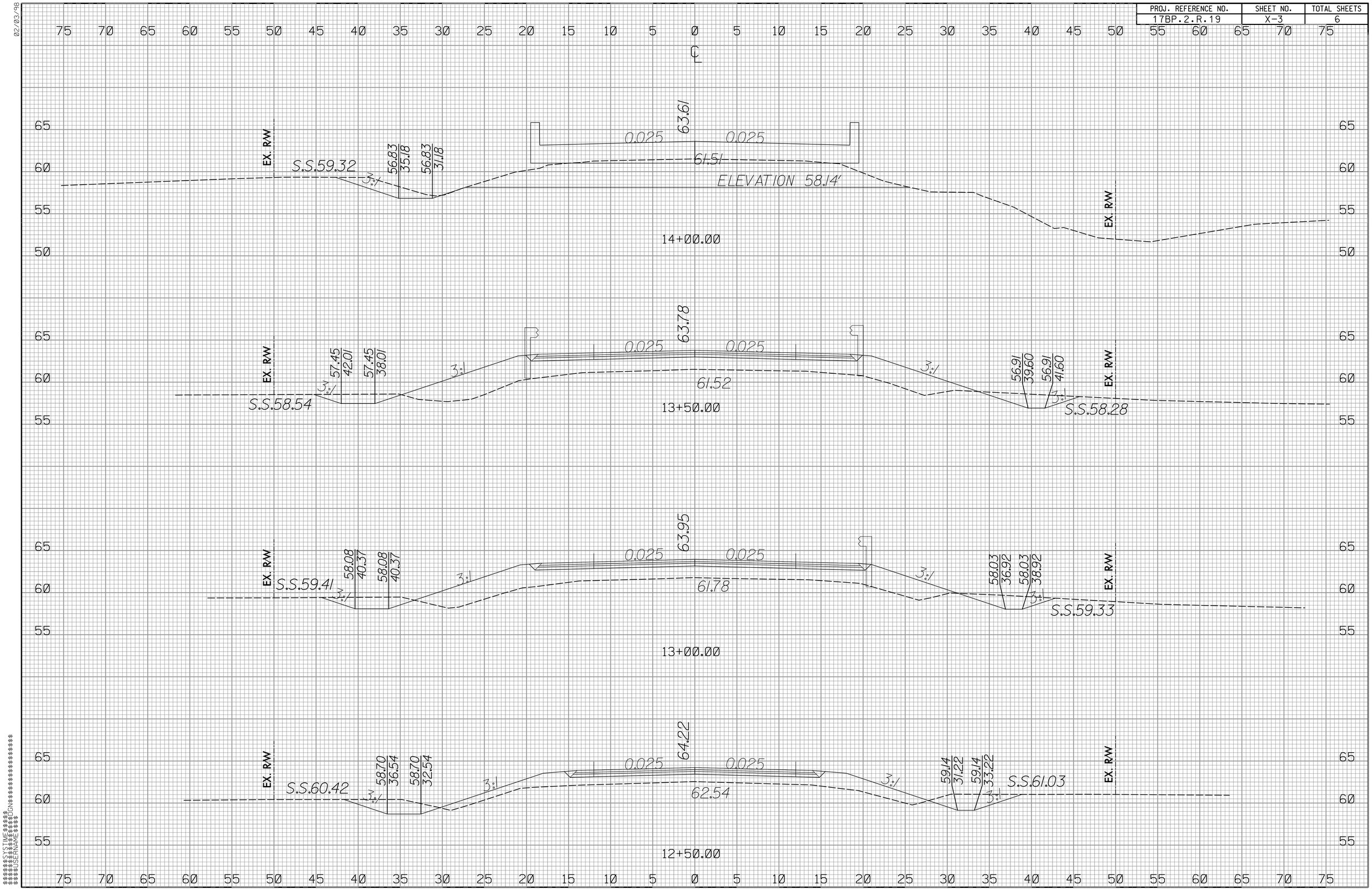


02/03/98

$$$$$$$$SYSTIME$$$$$$$$
$$$$$$$$$$$$$$$$$$$$DGN$$$$$$$$$$$$$$$$$$$$
$$$$USERNAME$$$$

| PROJ. REFERENCE NO. | SHEET NO. | TOTAL SHEETS |
|---|---|---|
| 17BP.2.R.19 | X-4 | 6 |

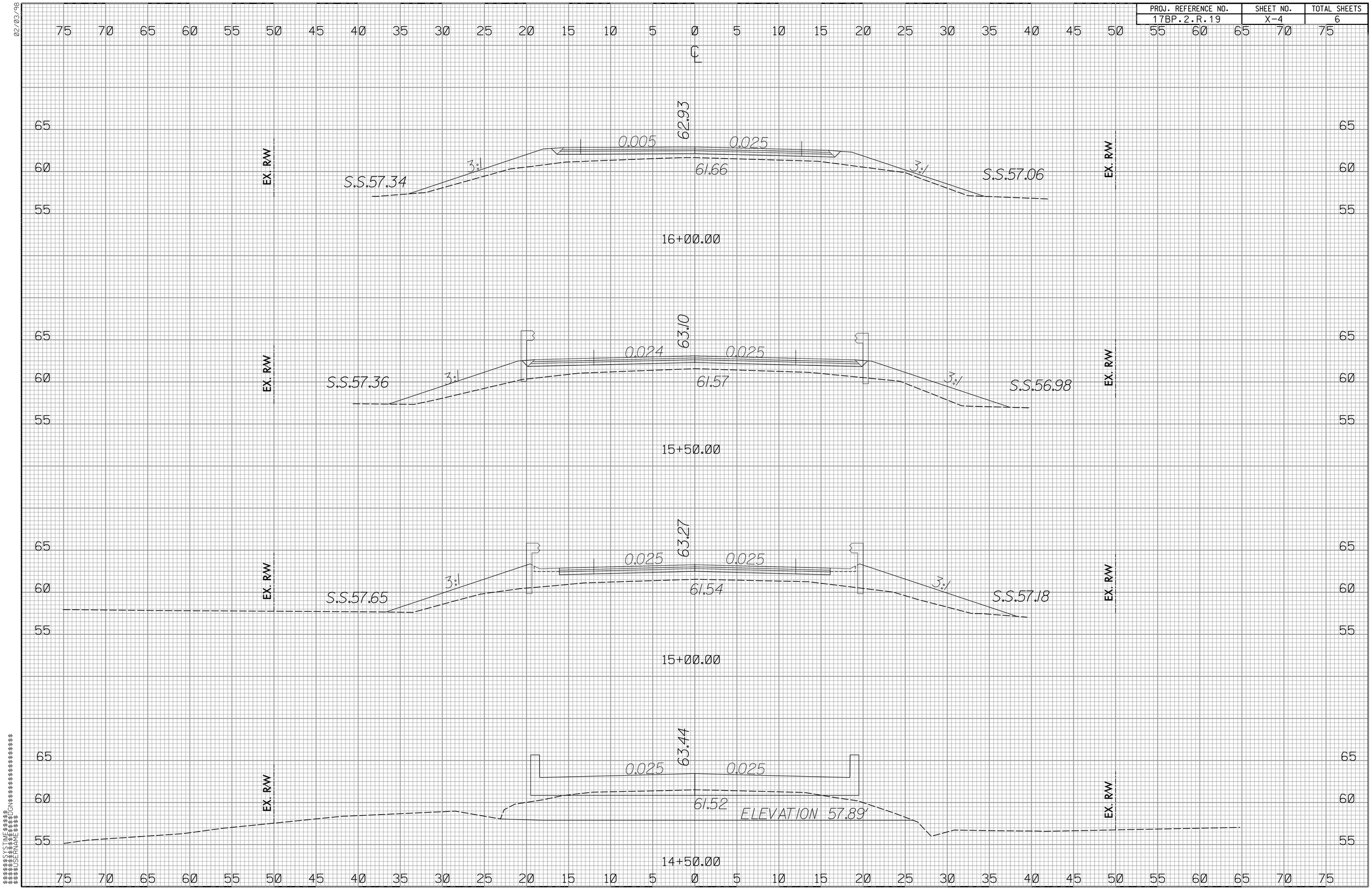


02/03/98

$$$$$$$$SYSTIME$$$$$$$$
$$$$$$$$$$$$$$$$$$$$DGN$$$$$$$$$$$$$$$$$$$$
$$$$USERNAME$$$$

| PROJ. REFERENCE NO. | SHEET NO. | TOTAL SHEETS |
|---|---|---|
| 17BP.2.R.19 | X-5 | 6 |

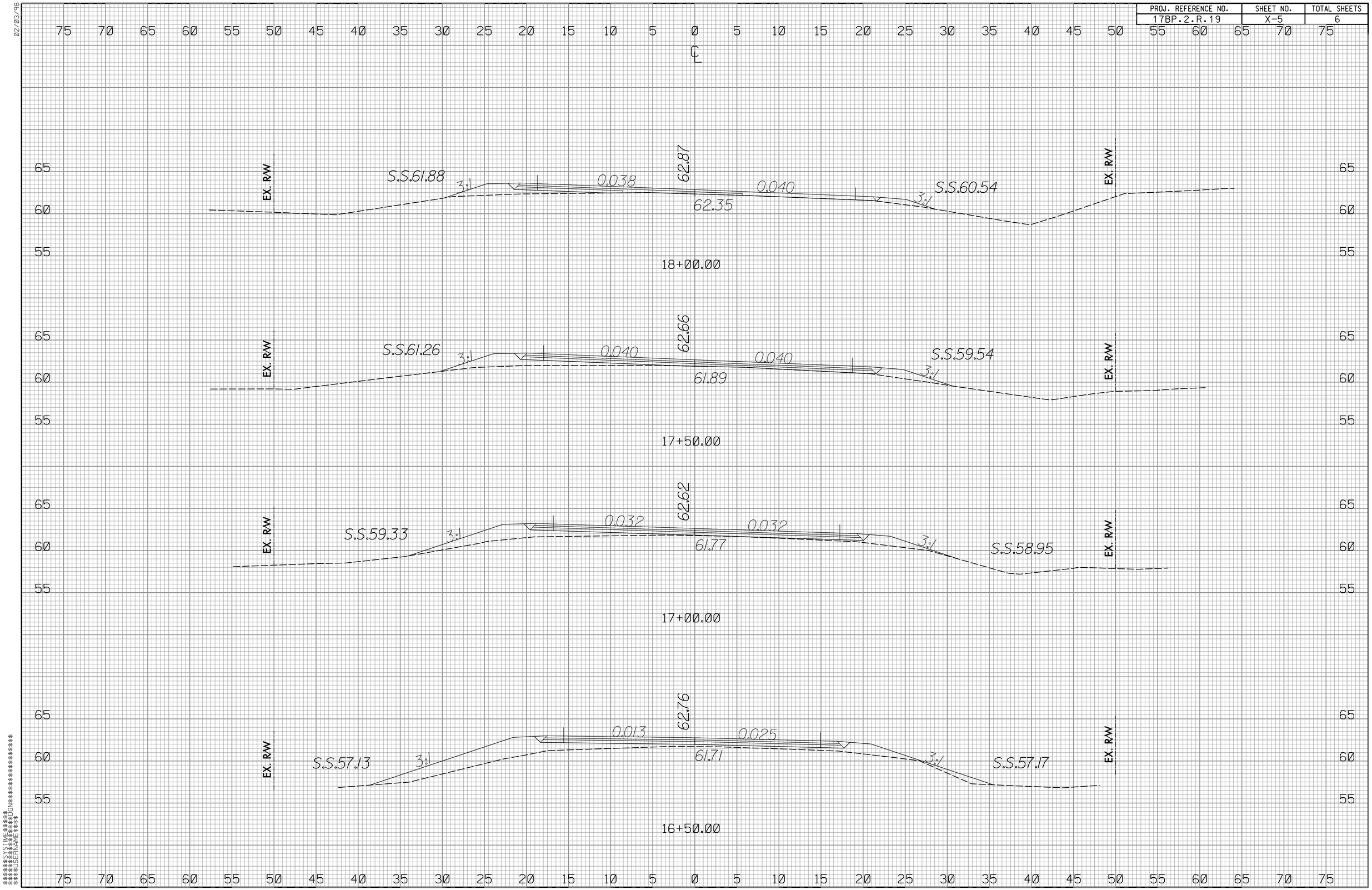


02/03/98

$$$$$$$$$$SYSTIME$$$$$$$$$$
$$$$$$$$$$

| PROJ. REFERENCE NO. | SHEET NO. | TOTAL SHEETS |
|---|---|---|
| 17BP.2.R.19 | X-6 | 6 |

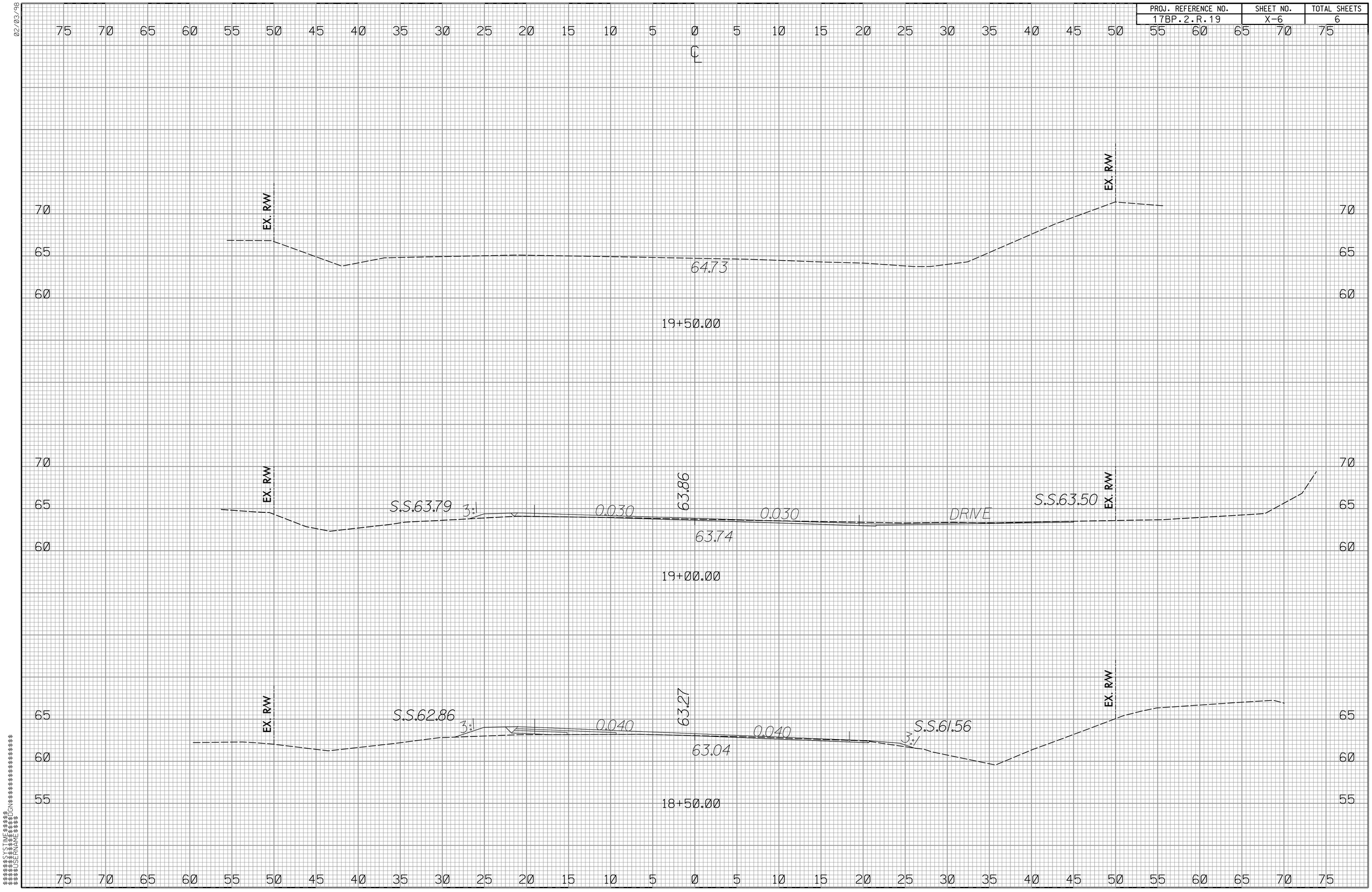


02/03/98

$$$$$$$$SYSTIME$$$$$$$$
$$$$$$$$DGN$$$$$$$$
$$$$$$$$USERNAME$$$$$$$$

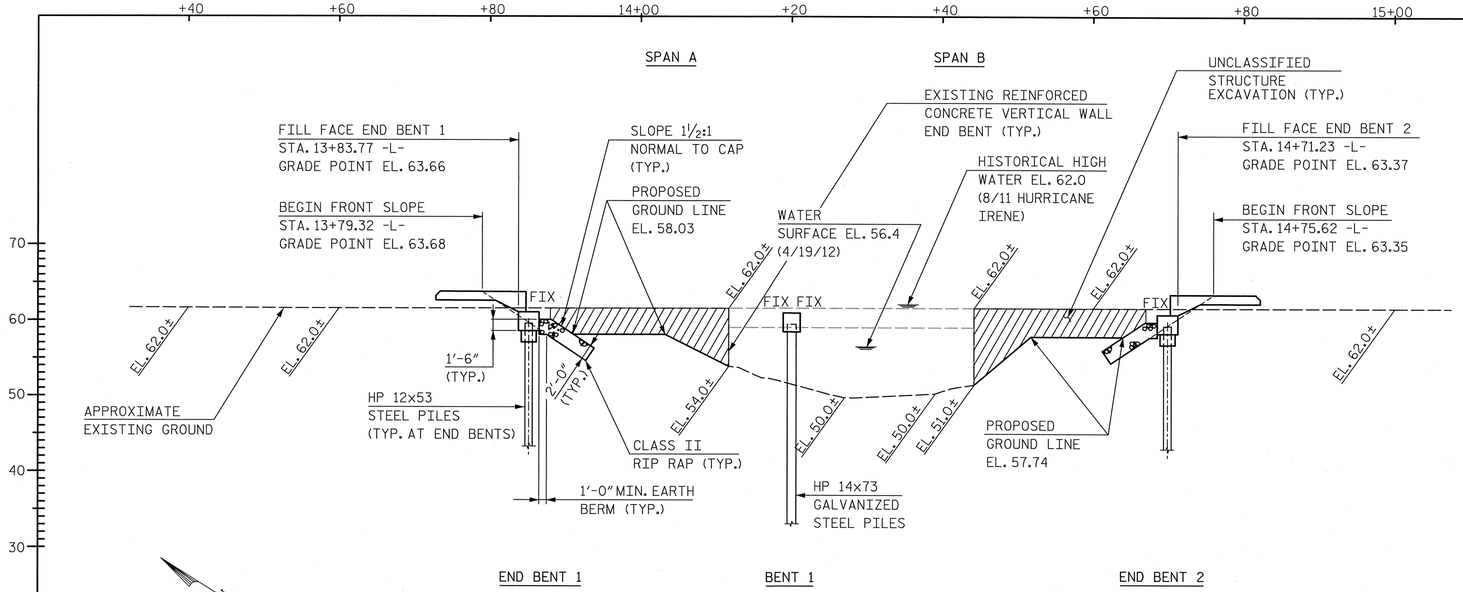


## SECTION ALONG ℄ SURVEY -L-

BENTS ON SECTION AT RIGHT ANGLES TO BENTS

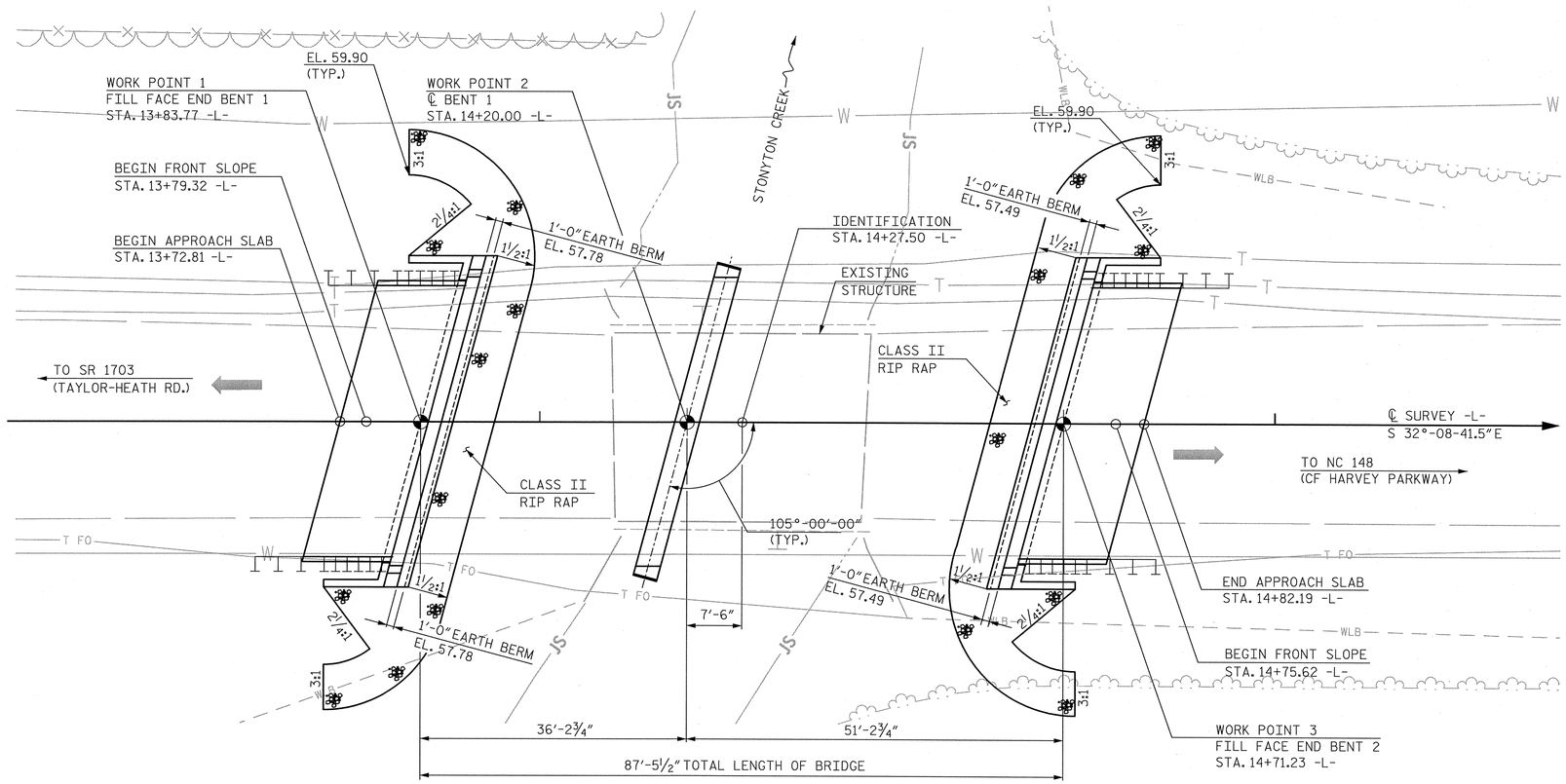


## PLAN

NOTE: PILES NOT SHOWN
FOR CLARITY.

FOR GENERAL NOTES, SEE SHEET 2.

## BRIDGE HYDRAULIC DATA

| | | |
|---|---|---|
| DESIGN DISCHARGE | = | 1,000 CFS |
| FREQUENCY OF DESIGN FLOOD | = | 50 YR |
| DESIGN HIGH WATER ELEVATION | = | 59.9 FT. |
| DRAINAGE AREA | = | 5.0 SQ. MI. |
| BASIC DISCHARGE (Q100) | = | 1,250 CFS |
| BASIC HIGH WATER ELEVATION | = | 60.30 FT. |

## OVERTOPPING FLOOD DATA

| | | |
|---|---|---|
| OVERTOPPING DISCHARGE | = | NA CFS |
| FREQUENCY OF OVERTOPPING FLOOD | = | > 500 YR |
| OVERTOPPING FLOOD ELEVATION | = | 62.88 FT. |

NOTE: ROADWAY OVERTOPS AT STA. 16+14.47 -L-
PRIOR TO BRIDGE OVERTOPPING.

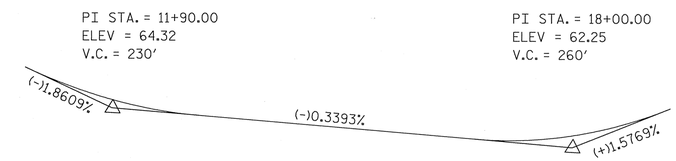


## GRADE DATA -L-

I HEREBY CERTIFY THESE PLANS
ARE AS-BUILT PLANS

**PROJECT NO.** 17BP.2.R.19

LENOIR **COUNTY**

**STATION:** 14+27.50 -L-

SHEET 1 OF 2 REPLACES BRIDGE NO. 50

NORTH CAROLINA PROFESSIONAL SEAL 12916 ENGINEER PAUL J. BARBER 2/18/13

STATE OF NORTH CAROLINA
**DEPARTMENT OF TRANSPORTATION**
RALEIGH

# GENERAL DRAWING FOR BRIDGE ON NC 58 OVER STONYTON CREEK BETWEEN SR 1703 AND NC 148

HNTB NORTH CAROLINA, P.C.
NC License No. C-1554
343 E. Six Forks Rd., Suite 200, Raleigh, N.C. 27609

DRAWN BY J. BAYNE DATE 9/12
CHECKED BY D. RAGAN DATE 9/12
DWG. NO. 1

| REVISIONS | | | | | | SHEET NO. |
|---|---|---|---|---|---|---|
| NO. | BY | DATE | NO. | BY | DATE | S-1 |
| 1 | | | 3 | | | TOTAL SHEETS |
| 2 | | | 4 | | | 17 |

BM - "BM-1", RR SPIKE IN 15" PINE TREE, 59.41' RT. OF STA. 11+33.61 -L-, ELEV. 65.83

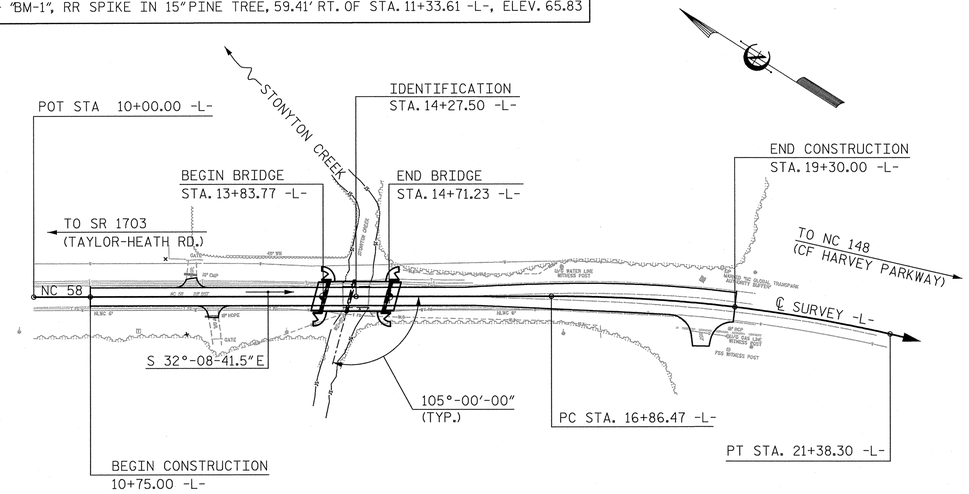


## LOCATION SKETCH

FOR UTILITY INFORMATION, SEE UTILITY PLANS AND SPECIAL PROVISIONS.

## FOUNDATION NOTES

FOR PILES, SEE SECTION 450 OF THE STANDARD SPECIFICATIONS.

PILES AT END BENT NO. 1 ARE DESIGNED FOR A FACTORED RESISTANCE OF 60 TONS PER PILE.

DRIVE PILES AT END BENT NO. 1 TO A REQUIRED DRIVING RESISTANCE OF 100 TONS PER PILE.

PILES AT BENT NO. 1 ARE DESIGNED FOR A FACTORED RESISTANCE OF 100 TONS PER PILE.

DRIVE PILES AT BENT NO. 1 TO A REQUIRED DRIVING RESISTANCE OF 175 TONS PER PILE. THIS REQUIRED DRIVING RESISTANCE INCLUDES ADDITIONAL RESISTANCE FOR DOWNDRAG OR SCOUR.

PILES AT END BENT NO. 2 ARE DESIGNED FOR A FACTORED RESISTANCE OF 75 TONS PER PILE.

DRIVE PILES AT END BENT NO. 2 TO A REQUIRED DRIVING RESISTANCE OF 125 TONS PER PILE.

INSTALL PILES AT BENT NO. 1 TO A TIP ELEVATION NO HIGHER THAN 29.0 FT.

THE SCOUR CRITICAL ELEVATION FOR BENT NO. 1 IS ELEVATION 42.5 FT. SCOUR CRITICAL ELEVATIONS ARE USED TO MONITOR POSSIBLE SCOUR PROBLEMS DURING THE LIFE OF THE STRUCTURE.

IT HAS BEEN ESTIMATED THAT A HAMMER WITH AN EQUIVALENT RATED ENERGY IN THE RANGE OF 30 TO 45 FT-KIPS PER BLOW WILL BE REQUIRED TO DRIVE PILES AT END BENT NO. 1 AND END BENT NO. 2. THIS ESTIMATED ENERGY RANGE DOES NOT RELEASE THE CONTRACTOR FROM PROVIDING DRIVING EQUIPMENT IN ACCORDANCE WITH SUBARTICLE 450-3(D)(2) OF THE STANDARD SPECIFICATIONS.

IT HAS BEEN ESTIMATED THAT A HAMMER WITH AN EQUIVALENT RATED ENERGY IN THE RANGE OF 40 TO 60 FT-KIPS PER BLOW WILL BE REQUIRED TO DRIVE PILES AT BENT NO. 1. THIS ESTIMATED ENERGY RANGE DOES NOT RELEASE THE CONTRACTOR FROM PROVIDING DRIVING EQUIPMENT IN ACCORDANCE WITH SUBARTICLE 450-3(D)(2) OF THE STANDARD SPECIFICATIONS.

TESTING PILES WITH THE PDA DURING DRIVING, RESTRIKING OR REDRIVING MAY BE REQUIRED. THE ENGINEER WILL DETERMINE THE NEED FOR PDA TESTING. FOR PDA TESTING, SEE SECTION 450 OF THE STANDARD SPECIFICATIONS AND FOR PILE DRIVING CRITERIA, SEE PILE DRIVING CRITERIA PROVISION.

## TOTAL BILL OF MATERIAL

| | REMOVAL OF EXISTING STRUCTURE AT STATION 14+27.50 -L- | UNCLASSIFIED STRUCTURE EXCAVATION AT STATION 14+27.50 -L- | CONCRETE WEARING SURFACE | GROOVING BRIDGE FLOORS | CLASS A CONCRETE | BRIDGE APPROACH SLABS AT STATION 14+27.50 -L- | REINFORCING STEEL | HP 12x53 STEEL PILES | | HP 14x73 GALVANIZED STEEL PILES | | PILE REDRIVES | VERTICAL CONCRETE BARRIER RAIL | RIP RAP CLASS II (2'-0" THICK) | GEOTEXTILE FOR DRAINAGE | ELASTOMERIC BEARINGS | 3'-0"x1'-9" PRESTRESSED CONCRETE CORED SLABS | |
|---|---|---|---|---|---|---|---|---|---|---|---|---|---|---|---|---|---|---|
| | LUMP SUM | LUMP SUM | SQ. FT. | SQ. FT. | CU. YDS. | LUMP SUM | LBS. | NO. | LIN. FT. | NO. | LIN. FT. | EACH | LIN. FT. | TONS | SQ. YDS. | LUMP SUM | NO. | LIN. FT. |
| SUPERSTRUCTURE | LUMP SUM | — | 3,135 | 3,667 | — | LUMP SUM | — | — | — | — | — | — | 170.50 | — | — | LUMP SUM | 26 | 1,105 |
| END BENT NO. 1 | — | LUMP SUM | — | — | 17.5 | — | 2,592 | 7 | 315 | — | — | 2 | — | 117 | 131 | — | — | — |
| BENT NO. 1 | — | — | — | — | 14.9 | — | 2,783 | — | — | 8 | 360 | 3 | — | — | — | — | — | — |
| END BENT NO. 2 | — | LUMP SUM | — | — | 17.5 | — | 2,592 | 7 | 315 | — | — | 2 | — | 132 | 142 | — | — | — |
| TOTAL | LUMP SUM | LUMP SUM | 3,135 | 3,667 | 49.9 | LUMP SUM | 7,967 | 14 | 630 | 8 | 360 | 7 | 170.50 | 249 | 273 | LUMP SUM | 26 | 1,105 |

## GENERAL NOTES

ASSUMED LIVE LOAD = HL-93 OR ALTERNATE LOADING.

FOR OTHER DESIGN DATA AND GENERAL NOTES, SEE SHEET SN.

FOR EROSION CONTROL MEASURES SEE EROSION CONTROL PLANS.

THIS BRIDGE HAS BEEN DESIGNED IN ACCORDANCE WITH THE REQUIREMENTS OF THE AASHTO LRFD BRIDGE DESIGN SPECIFICATIONS.

THE EXISTING 1 SPAN STRUCTURE WITH A SPAN LENGTH OF 32'-6", WITH 7 LINES OF W18x64 STEEL I-BEAMS @ 4'-2½" CENTERS SUPPORTING REINFORCED CONCRETE DECK WITH A 25'-10" CLEAR ROADWAY WIDTH ON CONCRETE VERTICAL WALL END BENTS SHALL BE REMOVED. IN ADDITION, ANY PILES REMAINING FROM PREVIOUS BRIDGE CONSTRUCTION OR MAINTENANCE OPERATIONS SHALL BE REMOVED AND INCLUDED IN THE LUMP SUM PAY ITEM FOR "REMOVAL OF EXISTING STRUCTURE AT STATION 14+27.50 -L-".

REMOVAL OF THE EXISTING BRIDGE SHALL BE PERFORMED SO AS NOT TO ALLOW DEBRIS TO FALL INTO THE WATER. THE CONTRACTOR SHALL REMOVE THE BRIDGE AND SUBMIT PLANS FOR DEMOLITION IN ACCORDANCE WITH ARTICLE 402-2 OF THE STANDARD SPECIFICATIONS.

THE MATERIAL SHOWN IN THE CROSS-HATCHED AREA SHALL BE EXCAVATED FOR A DISTANCE OF 22.5 FT EACH SIDE OF CENTERLINE ROADWAY AS DIRECTED BY THE ENGINEER. THIS WORK WILL BE PAID FOR AT THE CONTRACT LUMP SUM PRICE FOR UNCLASSIFIED STRUCTURE EXCAVATION. SEE SECTION 412 OF THE STANDARD SPECIFICATIONS.

THE SUBSTRUCTURE OF THE EXISTING BRIDGE INDICATED ON THE PLANS IS FROM THE BEST INFORMATION AVAILABLE. SINCE THIS INFORMATION IS SHOWN FOR THE CONVENIENCE OF THE CONTRACTOR, THE CONTRACTOR SHALL HAVE NO CLAIM WHATSOEVER AGAINST THE DEPARTMENT OF TRANSPORTATION FOR ANY DELAYS OR ADDITIONAL COST INCURRED BASED ON DIFFERENCES BETWEEN THE EXISTING BRIDGE SUBSTRUCTURE SHOWN ON THE PLANS AND THE ACTUAL CONDITIONS AT THE PROJECT SITE.

THIS STRUCTURE HAS BEEN DESIGNED IN ACCORDANCE WITH HEC 18, "EVALUATING SCOUR AT BRIDGES".

INASMUCH AS THE PAINT SYSTEM ON THE EXISTING STRUCTURAL STEEL CONTAINS LEAD, THE CONTRACTOR'S ATTENTION IS DIRECTED TO ARTICLE 107-1 OF THE STANDARD SPECIFICATIONS. ANY COST RESULTING FROM COMPLIANCE WITH THE APPLICABLE STATE OR FEDERAL REGULATIONS PERTAINING TO HANDLING OF MATERIALS CONTAINING LEAD BASED PAINT SHALL BE INCLUDED IN THE BID PRICE FOR "REMOVAL OF EXISTING STRUCTURE AT STATION 14+27.50 -L-".

FOR SUBMITTAL OF WORKING DRAWINGS, SEE SPECIAL PROVISIONS.

FOR FALSEWORK AND FORMWORK, SEE SPECIAL PROVISIONS.

THIS BRIDGE SHALL BE CONSTRUCTED USING TOP-DOWN CONSTRUCTION METHODS. THE USE OF A TEMPORARY CAUSEWAY OR WORK BRIDGE IS NOT PERMITTED.

FOR CRANE SAFETY, SEE SPECIAL PROVISIONS.

FOR GROUT FOR STRUCTURES, SEE SPECIAL PROVISIONS.

THIS BRIDGE IS LOCATED IN SEISMIC ZONE 1.

PROJECT NO. 17BP.2.R.19

LENOIR COUNTY

STATION: 14+27.50 -L-

SHEET 2 OF 2

NORTH CAROLINA PROFESSIONAL SEAL 12916 ENGINEER PAUL J. BARBER 2/8/13

STATE OF NORTH CAROLINA
DEPARTMENT OF TRANSPORTATION
RALEIGH

GENERAL DRAWING
FOR BRIDGE ON NC 58
OVER STONYTON CREEK
BETWEEN SR 1703
AND NC 148

HNTB

HNTB NORTH CAROLINA, P.C.
NC License No. C-1554
343 E. Six Forks Rd., Suite 200, Raleigh, N.C. 27609

DRAWN BY J. BAYNE DATE 9/12
CHECKED BY D. RAGAN DATE 9/12

DWG. NO. 2

| REVISIONS | | | | | | SHEET NO. |
|---|---|---|---|---|---|---|
| NO. | BY | DATE | NO. | BY | DATE | S-2 |
| 1 | | | 3 | | | TOTAL SHEETS |
| 2 | | | 4 | | | 17 |

# LOAD AND RESISTANCE FACTOR RATING (LRFR) SUMMARY FOR PRESTRESSED CONCRETE GIRDERS

| LEVEL | | VEHICLE | WEIGHT (W) (TONS) | CONTROLLING LOAD RATING (#) | MINIMUM RATING FACTORS (RF) | TONS = W X RF | STRENGTH I LIMIT STATE | | | | | | | | | | | SERVICE III LIMIT STATE | | | | | | COMMENT NUMBER |
|---|---|---|---|---|---|---|---|---|---|---|---|---|---|---|---|---|---|---|---|---|---|---|---|---|
| | | | | | | | | MOMENT | | | | | SHEAR | | | | | | MOMENT | | | | | |
| | | | | | | | LIVELOAD FACTORS | DISTRIBUTION FACTORS (DF) | RATING FACTOR | SPAN | GIRDER LOCATION | DISTANCE FROM LEFT END OF SPAN (ft) | DISTRIBUTION FACTORS (DF) | RATING FACTOR | SPAN | GIRDER LOCATION | DISTANCE FROM LEFT END OF SPAN (ft) | LIVELOAD FACTORS | DISTRIBUTION FACTORS (DF) | RATING FACTOR | SPAN | GIRDER LOCATION | DISTANCE FROM LEFT END OF SPAN (ft) | |
| DESIGN LOAD RATING | | HL-93(Inv) | N/A | 1 | 1.17 | -- | 1.75 | 0.274 | 1.41 | B | EL | 24.482 | 0.616 | 1.17 | B | EL | 4.896 | 0.80 | 0.274 | 1.41 | B | EL | 24.482 | |
| | | HL-93(Opr) | N/A | -- | 1.51 | -- | 1.35 | 0.274 | 1.83 | B | EL | 24.482 | 0.616 | 1.51 | B | EL | 4.896 | N/A | -- | -- | -- | -- | -- | |
| | | HS-20(Inv) | 36.000 | 2 | 1.39 | 50.005 | 1.75 | 0.274 | 1.75 | B | EL | 24.482 | 0.616 | 1.39 | B | EL | 4.896 | 0.80 | 0.274 | 1.75 | B | EL | 24.482 | |
| | | HS-20(Opr) | 36.000 | -- | 1.8 | 64.821 | 1.35 | 0.274 | 2.27 | B | EL | 24.482 | 0.616 | 1.8 | B | EL | 4.896 | N/A | -- | -- | -- | -- | -- | |
| LEGAL LOAD RATING | SV | SNSH | 13.500 | -- | 3.36 | 45.354 | 1.4 | 0.274 | 4.45 | B | EL | 24.482 | 0.616 | 3.88 | B | EL | 4.896 | 0.80 | 0.279 | 3.36 | A | EL | 16.982 | |
| | | SNGARBS2 | 20.000 | -- | 2.81 | 56.252 | 1.4 | 0.274 | 3.51 | B | EL | 24.482 | 0.616 | 2.83 | B | EL | 4.896 | 0.80 | 0.274 | 2.81 | B | EL | 24.482 | |
| | | SNAGRIS2 | 22.000 | -- | 2.66 | 58.572 | 1.4 | 0.274 | 3.4 | B | EL | 19.586 | 0.616 | 2.66 | B | EL | 4.896 | 0.80 | 0.274 | 2.72 | B | EL | 24.482 | |
| | | SNCOTTS3 | 27.250 | -- | 1.68 | 45.834 | 1.4 | 0.274 | 2.22 | B | EL | 24.482 | 0.616 | 1.94 | B | EL | 4.896 | 0.80 | 0.279 | 1.68 | A | EL | 16.982 | |
| | | SNAGGRS4 | 34.925 | -- | 1.54 | 53.941 | 1.4 | 0.274 | 1.93 | B | EL | 24.482 | 0.616 | 1.67 | B | EL | 4.896 | 0.80 | 0.274 | 1.54 | B | EL | 24.482 | |
| | | SNS5A | 35.550 | -- | 1.51 | 53.543 | 1.4 | 0.274 | 1.88 | B | EL | 24.482 | 0.616 | 1.72 | B | EL | 4.896 | 0.80 | 0.274 | 1.51 | B | EL | 24.482 | |
| | | SNS6A | 39.950 | -- | 1.41 | 56.263 | 1.4 | 0.274 | 1.76 | B | EL | 24.482 | 0.616 | 1.59 | B | EL | 4.896 | 0.80 | 0.274 | 1.41 | B | EL | 24.482 | |
| | | SNS7B | 42.000 | -- | 1.34 | 56.371 | 1.4 | 0.274 | 1.68 | B | EL | 24.482 | 0.616 | 1.6 | B | EL | 4.896 | 0.80 | 0.274 | 1.34 | B | EL | 24.482 | |
| | TTST | TNAGRIT3 | 33.000 | -- | 1.73 | 56.937 | 1.4 | 0.274 | 2.15 | B | EL | 24.482 | 0.616 | 1.88 | B | EL | 4.896 | 0.80 | 0.274 | 1.73 | B | EL | 24.482 | |
| | | TNT4A | 33.075 | -- | 1.74 | 57.565 | 1.4 | 0.274 | 2.17 | B | EL | 24.482 | 0.616 | 1.8 | B | EL | 4.896 | 0.80 | 0.274 | 1.74 | B | EL | 24.482 | |
| | | TNT6A | 41.600 | -- | 1.45 | 60.310 | 1.4 | 0.274 | 1.81 | B | EL | 24.482 | 0.616 | 1.75 | B | EL | 4.896 | 0.80 | 0.274 | 1.45 | B | EL | 24.482 | |
| | | TNT7A | 42.000 | -- | 1.47 | 61.810 | 1.4 | 0.274 | 1.84 | B | EL | 24.482 | 0.616 | 1.62 | B | EL | 4.896 | 0.80 | 0.274 | 1.47 | B | EL | 24.482 | |
| | | TNT7B | 42.000 | -- | 1.53 | 64.440 | 1.4 | 0.274 | 1.92 | B | EL | 24.482 | 0.616 | 1.54 | B | EL | 4.896 | 0.80 | 0.274 | 1.53 | B | EL | 24.482 | |
| | | TNAGRIT4 | 43.000 | -- | 1.46 | 62.609 | 1.4 | 0.274 | 1.82 | B | EL | 24.482 | 0.616 | 1.48 | B | EL | 4.896 | 0.80 | 0.274 | 1.46 | B | EL | 24.482 | |
| | | TNAGT5A | 45.000 | -- | 1.36 | 61.205 | 1.4 | 0.274 | 1.7 | B | EL | 24.482 | 0.616 | 1.51 | B | EL | 4.896 | 0.80 | 0.274 | 1.36 | B | EL | 24.482 | |
| | | TNAGT5B | 45.000 | 3 | 1.33 | 59.965 | 1.4 | 0.274 | 1.66 | B | EL | 24.482 | 0.616 | 1.4 | B | EL | 4.896 | 0.80 | 0.274 | 1.33 | B | EL | 24.482 | |

## LOAD FACTORS:

| DESIGN LOAD RATING FACTORS | LIMIT STATE | $\gamma_{DC}$ | $\gamma_{DW}$ |
|---|---|---|---|
| | STRENGTH I | 1.25 | 1.50 |
| | SERVICE III | 1.00 | 1.00 |

## NOTES:

MINIMUM RATING FACTORS ARE BASED ON THE STRENGTH I AND SERVICE III LIMIT STATES.

ALLOWABLE STRESSES FOR SERVICE III LIMIT STATE ARE AS REQUIRED FOR DESIGN.

## COMMENTS:

1.
2.
3.
4.

(#) CONTROLLING LOAD RATING

(1) DESIGN LOAD RATING (HL-93)

(2) DESIGN LOAD RATING (HS-20)

(3) LEGAL LOAD RATING **

** SEE CHART FOR VEHICLE TYPE

GIRDER LOCATION

I - INTERIOR GIRDER
EL - EXTERIOR LEFT GIRDER
ER - EXTERIOR RIGHT GIRDER

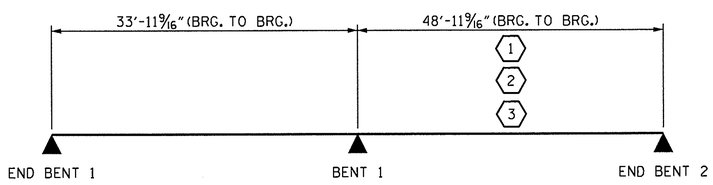


LRFR SUMMARY

PROJECT NO. 17BP.2.R.19
LENOIR COUNTY
STATION: 14+27.50 -L-

STATE OF NORTH CAROLINA
DEPARTMENT OF TRANSPORTATION
RALEIGH

STANDARD
LRFR SUMMARY FOR CORED SLAB UNIT 105° SKEW
(NON-INTERSTATE TRAFFIC)

NORTH CAROLINA PROFESSIONAL SEAL 22005 ENGINEER A. KEITH PASCHAL
2-13-13

| REVISIONS | | | | | | | | SHEET NO. |
|---|---|---|---|---|---|---|---|---|
| NO. | BY: | DATE: | NO. | BY: | DATE: | | | S-3 |
| 1 | | | 3 | | | | | TOTAL SHEETS |
| 2 | | | 4 | | | | | 17 |

STD. NO. LRFR1

ASSEMBLED BY : E.K. POPE DATE : 2-1-13
CHECKED BY : R. KOUCHEKI DATE : 2-5-13
DRAWN BY : MAA 1/08
CHECKED BY : GM/DI 2/08
REV. 11/12/08RR MAA/GM
REV. 10/1/11 MAA/GM

13-FEB-2013 08:47
S:\DPGI\Keith\17BP.2.R.19\ekpope\17BP2R19_SD_CS.dgn
kpaschal

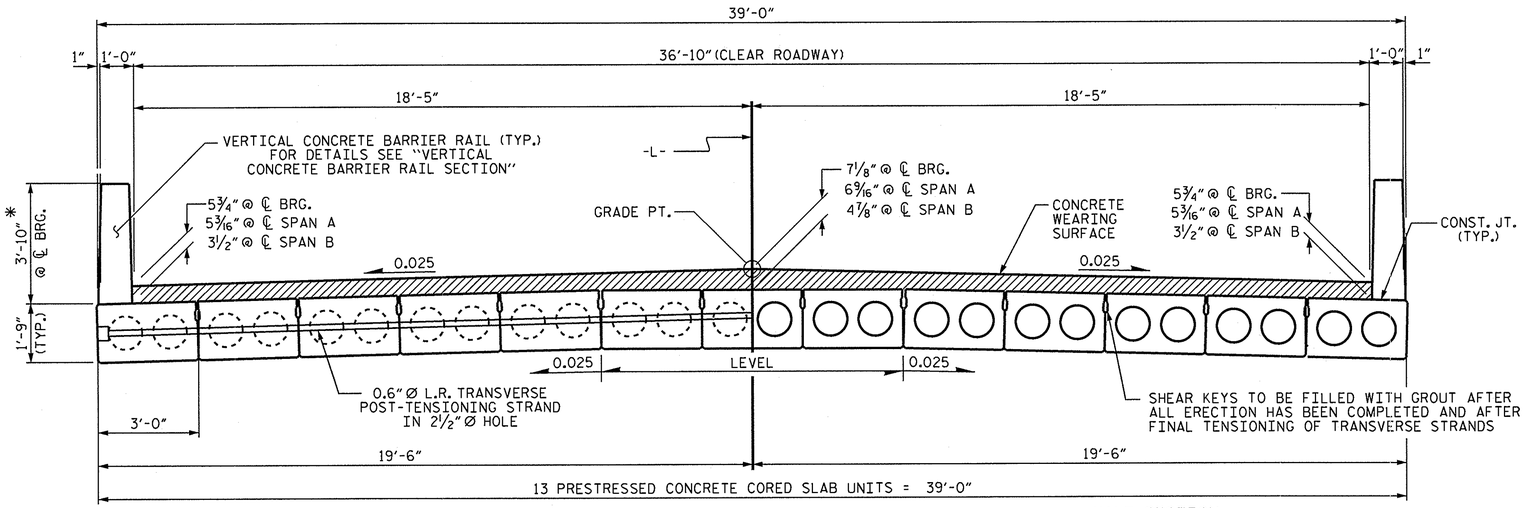


HALF SECTION
AT INTERMEDIATE DIAPHRAGMS

HALF SECTION
THROUGH VOIDS

## TYPICAL SECTION

*-THE MAXIMUM BARRIER RAIL HEIGHT AND CONCRETE THICKNESS IS SHOWN. THE HEIGHT OF THE BARRIER RAIL AND CONCRETE THICKNESS VARIES WHILE THE TOP OF THE BARRIER RAIL FOLLOWS THE PROFILE OF THE GUTTERLINE. FOR RAIL HEIGHT DETAILS AND CONCRETE THICKNESS SEE THE "VERTICAL CONCRETE BARRIER RAIL SECTION" DETAIL.

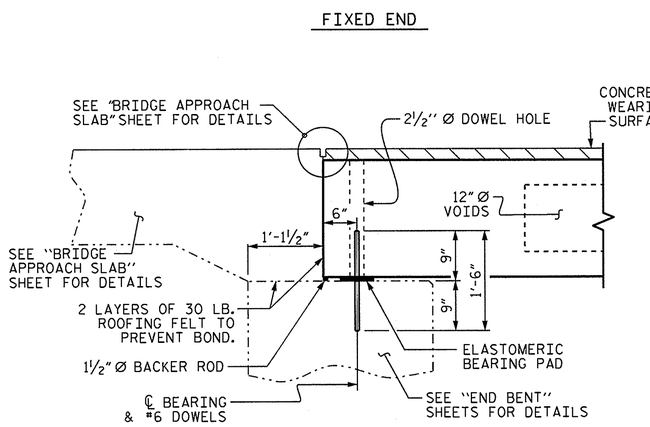


## SECTION AT END BENT

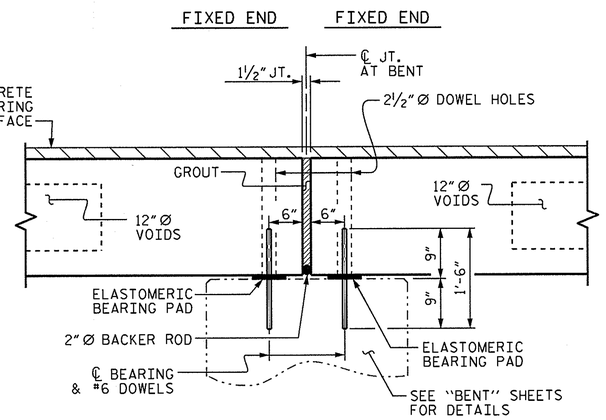


## SECTION AT BENT

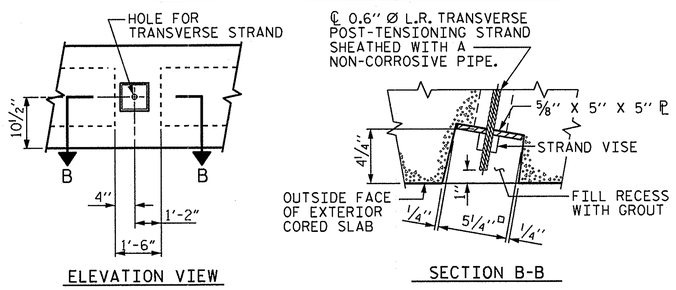


## GROUTED RECESS AT END OF POST-TENSIONED STRAND OF CORED SLABS

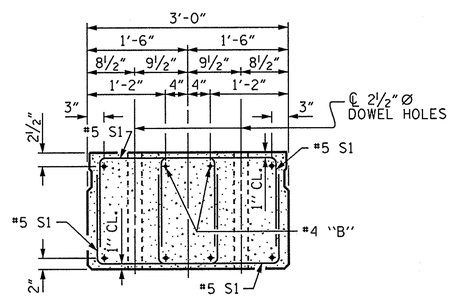


## END ELEVATION

SHOWING PLACEMENT OF DOUBLE STIRRUPS AND LOCATION OF DOWEL HOLES. (STRAND LAYOUT NOT SHOWN.) INTERIOR SLAB UNIT SHOWN-EXTERIOR SLAB UNIT SIMILAR EXCEPT SHEAR KEY LOCATION.

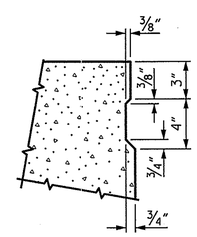


## SHEAR KEY DETAIL

NOTE: OMIT SHEAR KEY ON OUTSIDE FACE OF EXTERIOR CORED SLABS.

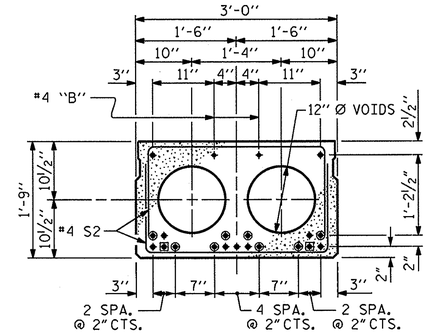


INTERIOR SLAB SECTION
(35' UNIT)
(11 STRANDS REQUIRED)

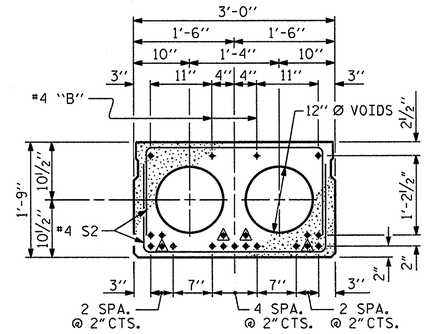


INTERIOR SLAB SECTION
(50' UNIT)
(19 STRANDS REQUIRED)

## 0.6" Ø LOW RELAXATION STRAND LAYOUT

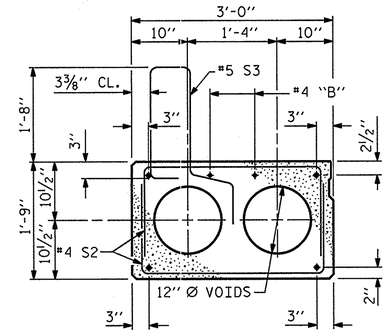


## EXT. SLAB SECTION

(FOR PRESTRESSED STRAND LAYOUT, SEE INTERIOR SLAB SECTION.)

▲ BOND SHALL BE BROKEN ON THESE STRANDS FOR A DISTANCE OF 6'-0" FROM END OF CORED SLAB UNIT. SEE STANDARD SPECIFICATIONS, ARTICLE 1078-7.

■ BOND SHALL BE BROKEN ON THESE STRANDS FOR A DISTANCE OF 2'-0" FROM END OF CORED SLAB UNIT. SEE STANDARD SPECIFICATIONS, ARTICLE 1078-7.

● OPTIONAL FULL LENGTH DEBONDED STRANDS. THESE STRANDS ARE NOT REQUIRED. IF THE FABRICATOR CHOOSES TO INCLUDE THESE STRANDS IN THE CORED SLAB UNIT, THE STRANDS SHALL BE DEBONDED FOR THE FULL LENGTH OF THE UNIT AT NO ADDITIONAL COST. SEE STANDARD SPECIFICATIONS, ARTICLE 1078-7.

## DEBONDING LEGEND

PROJECT NO. 17BP.2.R.19
LENOIR COUNTY
STATION: 14+27.50 -L-

SHEET 1 OF 5

STATE OF NORTH CAROLINA
DEPARTMENT OF TRANSPORTATION
RALEIGH

# 3'-0" X 1'-9" PRESTRESSED CONCRETE CORED SLAB UNIT 105° SKEW

NORTH CAROLINA PROFESSIONAL SEAL 22005 ENGINEER A. KEITH PASCHAL 2.17.13

| REVISIONS | | | | | | | | SHEET NO. |
|---|---|---|---|---|---|---|---|---|
| NO. | BY: | DATE: | NO. | BY: | DATE: | | | S-4 |
| 1 | | | 3 | | | | | TOTAL SHEETS |
| 2 | | | 4 | | | | | 17 |

| | | | |
|---|---|---|---|
| ASSEMBLED BY : E. K. POPE | | DATE : 2-1-13 | |
| CHECKED BY : R. KOUCHEKI | | DATE : 2-5-13 | |
| DRAWN BY : DGE 5/09 | REV. 12/11 | MAA/AAC | |
| CHECKED BY : BCH 6/09 | | | |

13-FEB-2013 08:47
S:\DPGI\Keith\17BP.2.R.19\ekpope\17BP2R19_SD_CS.dgn
kpaschal

STD. NO. 21" PCS2_39_105S

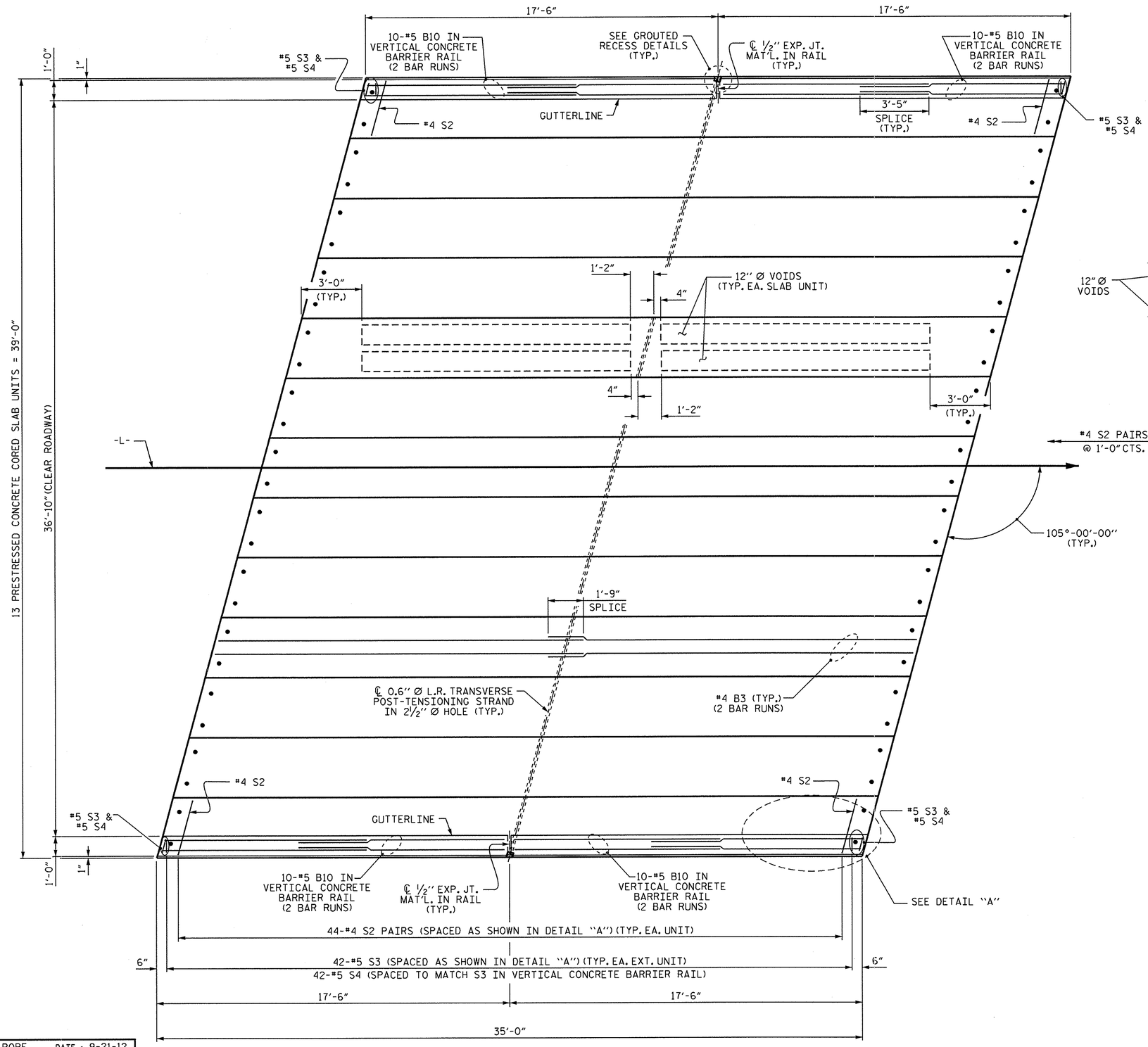


PLAN OF UNIT

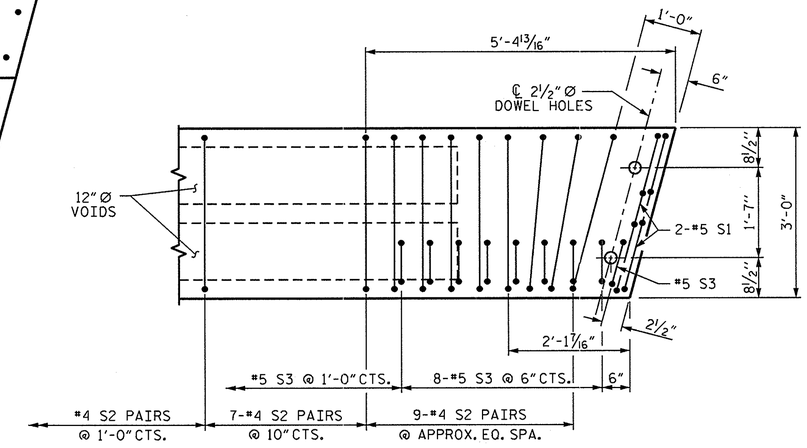


DETAIL "A"

NOTE: EXTERIOR UNIT SHOWN - INTERIOR UNIT SIMILAR EXCEPT OMIT #5 S3 BARS.

13 PRESTRESSED CONCRETE CORED SLAB UNITS = 39'-0"

36'-10" (CLEAR ROADWAY)

PROJECT NO. 17BP.2.R.19

LENOIR COUNTY

STATION: 14+27.50 -L-

SHEET 2 OF 5

STATE OF NORTH CAROLINA
DEPARTMENT OF TRANSPORTATION
RALEIGH

PLAN OF 35' UNIT
36'-10" CLEAR ROADWAY
105° SKEW

NORTH CAROLINA PROFESSIONAL SEAL 22005 ENGINEER KEITH PASCHAL
2-13-13

| REVISIONS | | | | | | SHEET NO. |
|---|---|---|---|---|---|---|
| NO. | BY: | DATE: | NO. | BY: | DATE: | S-5 |
| 1 | | | 3 | | | TOTAL SHEETS |
| 2 | | | 4 | | | 17 |

| | | | |
|---|---|---|---|
| ASSEMBLED BY : E. K. POPE | | DATE : 9-21-12 | |
| CHECKED BY : R. KOUCHEKI | | DATE : 11-5-12 | |
| DRAWN BY : DGE 6/09 | REV. 12/5/11 | MAA/AAC | |
| CHECKED BY: BCH 6/09 | | | |

13-FEB-2013 08:46
S:\DPG1\Keith\17BP.2.R.19\ekpope\17BP2R19_SD_CS.dgn
kpaschal

STD. NO. 21" PCS_39_105S_35L

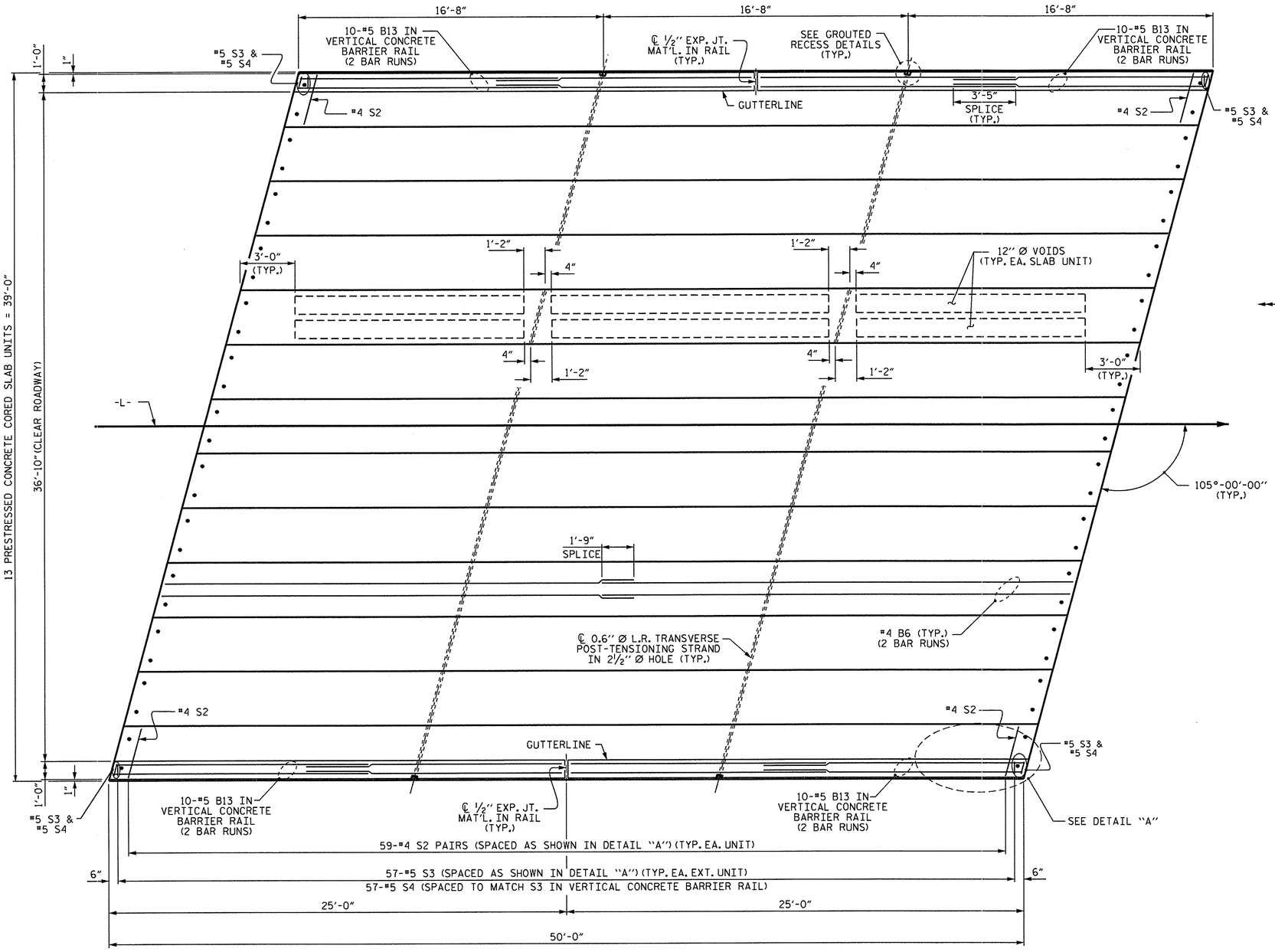


## PLAN OF UNIT

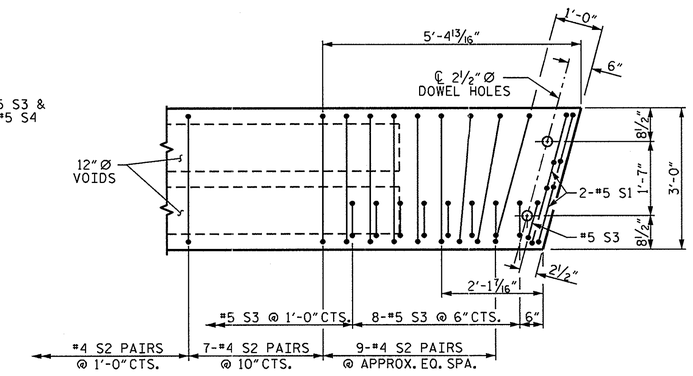


## DETAIL "A"

NOTE: EXTERIOR UNIT SHOWN - INTERIOR UNIT SIMILAR EXCEPT OMIT #5 S3 BARS.

PROJECT NO. 17BP.2.R.19

LENOIR COUNTY

STATION: 14+27.50 -L-

SHEET 3 OF 5

STATE OF NORTH CAROLINA
DEPARTMENT OF TRANSPORTATION
RALEIGH

PLAN OF 50' UNIT
36'-10" CLEAR ROADWAY
105° SKEW

| | | | |
|---|---|---|---|
| ASSEMBLED BY : | E. K. POPE | DATE : | 9-21-12 |
| CHECKED BY : | R. KOUCHEKI | DATE : | 11-5-12 |
| DRAWN BY : DGE 6/09 | REV. 12/5/11 MAA/AAC | | |
| CHECKED BY: BCH 6/09 | | | |

| REVISIONS | | | | | | SHEET NO. |
|---|---|---|---|---|---|---|
| NO. | BY: | DATE: | NO. | BY: | DATE: | S-6 |
| 1 | | | 3 | | | TOTAL SHEETS |
| 2 | | | 4 | | | 17 |

NORTH CAROLINA PROFESSIONAL SEAL 22005 ENGINEER K. KEITH PASCHAL
2-13-13

13-FEB-2013 08:46
S:\DPGI\Keith\17BP.2.R.19\ekpope\17BP2R19_SD_CS.dgn
kpaschal

STD. NO. 21" PCS_39_105S_50L

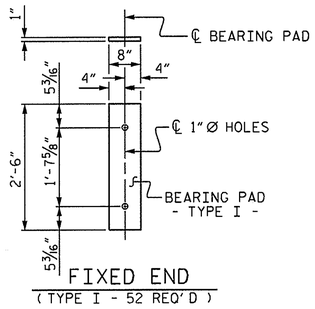


FIXED END
( TYPE I - 52 REQ'D )

## ELASTOMERIC BEARING DETAILS

ELASTOMER IN ALL BEARINGS SHALL BE 50 DUROMETER HARDNESS.

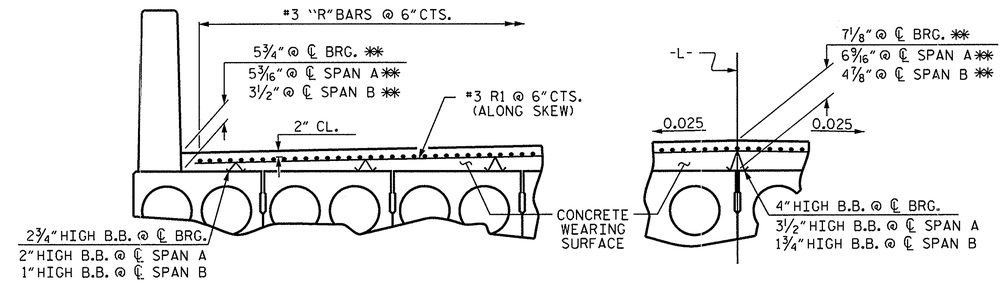


## REINFORCING FOR CONCRETE WEARING SURFACE

✱✱ BASED ON PREDICTED FINAL CAMBER AND THEORETICAL GRADE LINE ELEVATIONS

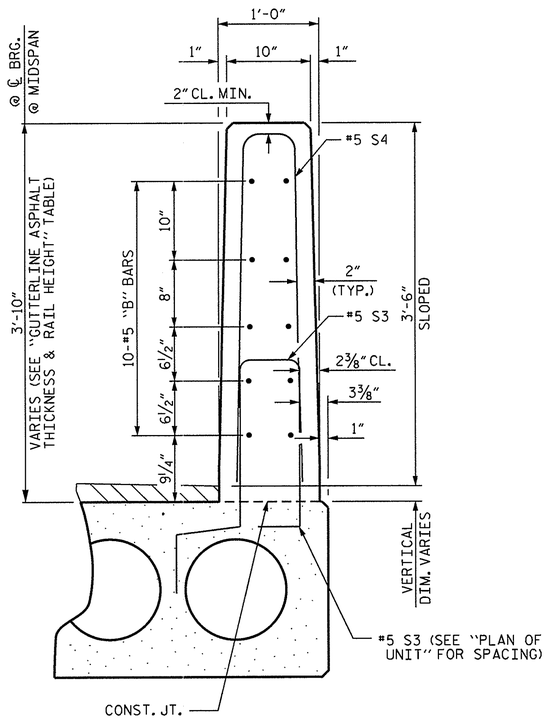


## VERTICAL CONCRETE BARRIER RAIL SECTION

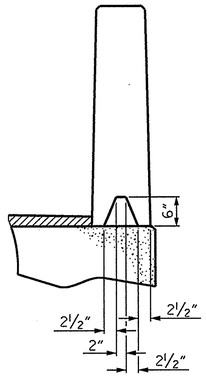


SECTION S-S
AT DAM IN OPEN JOINT
(THIS IS TO BE USED ONLY WHEN SLIP FORM IS USED)

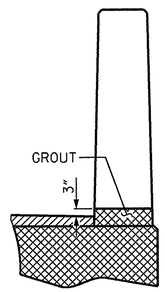


SECTION T-T
AT OPEN JOINT AT BENT
(THIS IS TO BE USED WHERE FOAM JOINT IS NOT USED)

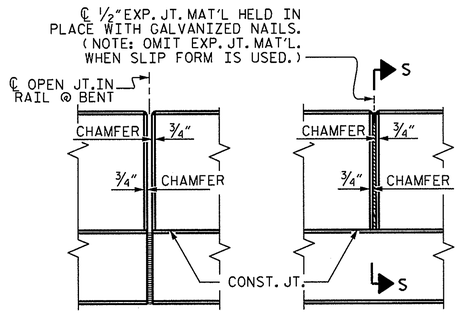


## ELEVATION AT EXPANSION JOINTS

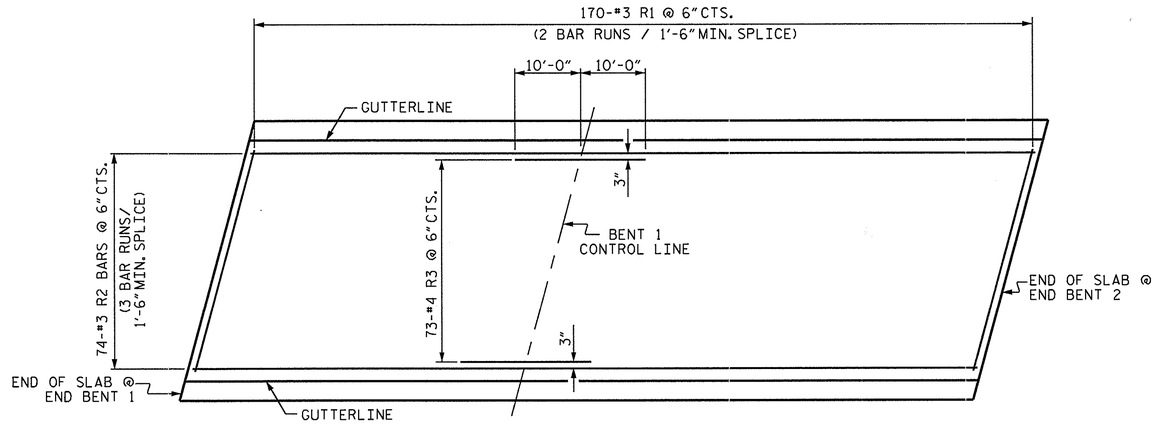


## PLAN SHOWING CONCRETE WEARING SURFACE REINFORCING STEEL

END VIEW

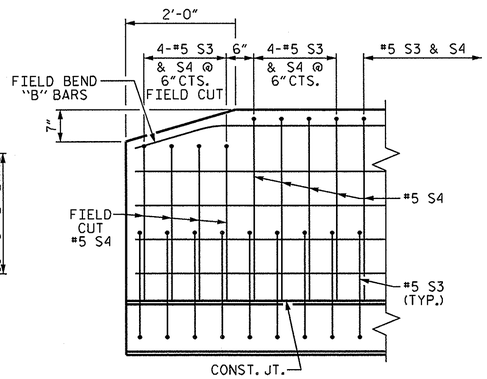


SIDE VIEW

## END OF RAIL DETAILS

PROJECT NO. 17BP.2.R.19
LENOIR COUNTY
STATION: 14+27.50 -L-

SHEET 4 OF 5

STATE OF NORTH CAROLINA
DEPARTMENT OF TRANSPORTATION
RALEIGH

3'-0" X 1'-9"
PRESTRESSED CONCRETE
CORED SLAB UNIT
105° SKEW

NORTH CAROLINA PROFESSIONAL SEAL 22005 ENGINEER KEITH PASCHAL
2-13-13

| REVISIONS | | | | | | | | SHEET NO. |
|---|---|---|---|---|---|---|---|---|
| NO. | BY: | DATE: | NO. | BY: | DATE: | | | S-7 |
| 1 | | | 3 | | | | | TOTAL SHEETS |
| 2 | | | 4 | | | | | 17 |

ASSEMBLED BY : E. K. POPE DATE : 2-1-13
CHECKED BY : REZA KOUCHEKI DATE : 2-5-13
DRAWN BY : DGE 5/09
CHECKED BY : BCH 6/09
REV. 12/11 MAA/AAC

13-FEB-2013 08:46
S:\DPGI\Keith\17BP.2.R.19\ekpope\17BP2R19_SD_CS.dgn
kpaschal

STD. NO. 21" PCS3_39_105S

## BILL OF MATERIAL FOR ONE 35′ CORED SLAB UNIT

| BAR | NUMBER | SIZE | TYPE | EXTERIOR UNIT LENGTH | EXTERIOR UNIT WEIGHT | INTERIOR UNIT LENGTH | INTERIOR UNIT WEIGHT |
|---|---|---|---|---|---|---|---|
| B3 | 4 | #4 | STR | 18′-3″ | 49 | 18′-3″ | 49 |
| S1 | 8 | #5 | 3 | 4′-3″ | 35 | 4′-3″ | 35 |
| S2 | 88 | #4 | 3 | 5′-4″ | 314 | 5′-4″ | 314 |
| ✻ S3 | 44 | #5 | 1 | 6′-2″ | 283 | | |
| REINFORCING STEEL | | | LBS. | | 398 | | 398 |
| ✻ EPOXY COATED REINFORCING STEEL | | | LBS. | | 283 | | |
| 5000 P.S.I. CONCRETE | | | CU. YDS. | | 5.2 | | 5.2 |
| 0.6″ Ø L.R. STRANDS | | | No. | | 11 | | 11 |

## BILL OF MATERIAL FOR ONE 50′ CORED SLAB UNIT

| BAR | NUMBER | SIZE | TYPE | EXTERIOR UNIT LENGTH | EXTERIOR UNIT WEIGHT | INTERIOR UNIT LENGTH | INTERIOR UNIT WEIGHT |
|---|---|---|---|---|---|---|---|
| B6 | 4 | #4 | STR | 25′-9″ | 69 | 25′-9″ | 69 |
| S1 | 8 | #5 | 3 | 4′-3″ | 35 | 4′-3″ | 35 |
| S2 | 118 | #4 | 3 | 5′-4″ | 420 | 5′-4″ | 420 |
| ✻ S3 | 59 | #5 | 1 | 6′-2″ | 379 | | |
| REINFORCING STEEL | | | LBS. | | 524 | | 524 |
| ✻ EPOXY COATED REINFORCING STEEL | | | LBS. | | 379 | | |
| 6200 P.S.I. CONCRETE | | | CU. YDS. | | 7.3 | | 7.3 |
| 0.6″ Ø L.R. STRANDS | | | No. | | 19 | | 19 |

## BILL OF MATERIAL FOR VERTICAL CONCRETE BARRIER RAIL

| BAR | BARS PER PAIR OF EXTERIOR UNITS | TOTAL NO. | SIZE | TYPE | LENGTH | WEIGHT |
|---|---|---|---|---|---|---|
| | 35′ UNIT | | | | | |
| ✻B10 | 80 | 80 | #5 | STR | 10′-5″ | 869 |
| ✻ S4 | 88 | 88 | #5 | 2 | 7′-2″ | 658 |
| ✻ EPOXY COATED REINFORCING STEEL | | | | LBS. | | 1527 |
| CLASS AA CONCRETE | | | | CU.YDS. | | 9.2 |
| TOTAL VERTICAL CONCRETE BARRIER RAIL | | | | LN. FT. | | 70.25 |

## BILL OF MATERIAL FOR VERTICAL CONCRETE BARRIER RAIL

| BAR | BARS PER PAIR OF EXTERIOR UNITS | TOTAL NO. | SIZE | TYPE | LENGTH | WEIGHT |
|---|---|---|---|---|---|---|
| | 50′ UNIT | | | | | |
| ✻B13 | 80 | 80 | #5 | STR | 14′-2″ | 1182 |
| ✻ S4 | 118 | 118 | #5 | 2 | 7′-2″ | 882 |
| ✻ EPOXY COATED REINFORCING STEEL | | | | LBS. | | 2064 |
| CLASS AA CONCRETE | | | | CU.YDS. | | 13.1 |
| TOTAL VERTICAL CONCRETE BARRIER RAIL | | | | LN. FT. | | 100.25 |

## DEAD LOAD DEFLECTION AND CAMBER

| | 3′-0″ x 1′-9″ |
|---|---|
| 35′ CORED SLAB UNIT | 0.6″ Ø L.R. STRAND |
| CAMBER (SLAB ALONE IN PLACE) | 5/8″ ↑ |
| DEFLECTION DUE TO SUPERIMPOSED DEAD LOAD | 1/16″ ↓ |
| FINAL CAMBER | 9/16″ ↑ |

## DEAD LOAD DEFLECTION AND CAMBER

| | 3′-0″ x 1′-9″ |
|---|---|
| 50′ CORED SLAB UNIT | 0.6″ Ø L.R. STRAND |
| CAMBER (SLAB ALONE IN PLACE) | 2 7/16″ ↑ |
| DEFLECTION DUE TO SUPERIMPOSED DEAD LOAD | 3/16″ ↓ |
| FINAL CAMBER | 2 1/4″ ↑ |

## BAR TYPES

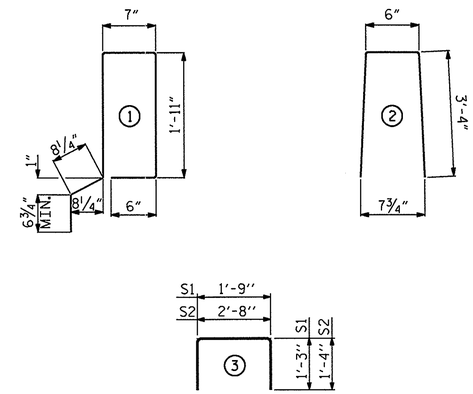


ALL BAR DIMENSIONS ARE OUT TO OUT

## GUTTERLINE CONCRETE THICKNESS & RAIL HEIGHT

| 36′-10″ CLEAR ROADWAY | CONCRETE OVERLAY THICKNESS @ MID-SPAN NORMAL CROWN SECTION | RAIL HEIGHT @ MID-SPAN |
|---|---|---|
| 35′ UNITS | 5 3/16″ | 3′-9 7/16″ |
| 50′ UNITS | 3 1/2″ | 3′-7 3/4″ |

## CORED SLABS REQUIRED

| | NUMBER | LENGTH | TOTAL LENGTH |
|---|---|---|---|
| 35′ UNIT | | | |
| EXTERIOR C.S. | 2 | 35′-0″ | 70′-0″ |
| INTERIOR C.S. | 11 | 35′-0″ | 385′-0″ |
| TOTAL | 13 | | 455′-0″ |

## CORED SLABS REQUIRED

| | NUMBER | LENGTH | TOTAL LENGTH |
|---|---|---|---|
| 50′ UNIT | | | |
| EXTERIOR C.S. | 2 | 50′-0″ | 100′-0″ |
| INTERIOR C.S. | 11 | 50′-0″ | 550′-0″ |
| TOTAL | 13 | | 650′-0″ |

## CONCRETE RELEASE STRENGTH

| UNIT | PSI |
|---|---|
| 35′ UNITS | 4000 |
| 50′ UNITS | 4900 |

## GRADE 270 STRANDS

| | 0.6″ Ø L.R. |
|---|---|
| AREA (SQUARE INCHES) | 0.217 |
| ULTIMATE STRENGTH (LBS. PER STRAND) | 58,600 |
| APPLIED PRESTRESS (LBS. PER STRAND) | 43,950 |

## BILL OF MATERIAL FOR CONCRETE WEARING SURFACE

| BAR | NO. | SIZE | TYPE | LENGTH | WEIGHT |
|---|---|---|---|---|---|
| ✻R1 | 340 | #3 | STR | 19′-8″ | 2514 |
| ✻R2 | 222 | #3 | STR | 29′-3″ | 2024 |
| ✻R3 | 73 | #4 | STR | 20′-0″ | 975 |
| ✻ EPOXY COATED REINFORCING STEEL | | | | LBS. | 4538 |
| CONCRETE WEARING SURFACE | | | | SQ. FT. | 3135 |

## GROOVING BRIDGE FLOORS

| | | |
|---|---|---|
| APPROACH SLABS | 787 | SQ.FT. |
| BRIDGE DECK | 2880 | SQ.FT. |
| TOTAL | 3667 | SQ.FT. |

## NOTES

ALL PRESTRESSING STRANDS SHALL BE 7-WIRE LOW RELAXATION GRADE 270 STRANDS AND SHALL CONFORM TO AASHTO M203 EXCEPT FOR SAMPLING REQUIREMENTS WHICH SHALL BE IN ACCORDANCE WITH THE STANDARD SPECIFICATIONS.

ALL REINFORCING STEEL CAST WITH THE CORED SLAB SECTIONS SHALL BE GRADE 60 AND SHALL BE INCLUDED IN THE UNIT PRICE BID FOR PRESTRESSED CONCRETE CORED SLABS.

RECESSES FOR TRANSVERSE STRANDS SHALL BE GROUTED AFTER THE TENSIONING OF THE STRANDS.

THE 2 1/2″ Ø DOWEL HOLES AT FIXED ENDS OF SLAB SECTIONS SHALL BE FILLED WITH NON-SHRINK GROUT.

THE BACKER RODS SHALL CONFORM TO THE REQUIREMENTS OF TYPE M BOND BREAKER. SEE SECTION 1028 OF THE STANDARD SPECIFICATIONS.

WHEN CORED SLABS ARE CAST, AN INTERNAL HOLD-DOWN SYSTEM SHALL BE EMPLOYED TO PREVENT VOIDS FROM RISING OR MOVING SIDEWAYS. AT LEAST SIX WEEKS PRIOR TO CASTING CORED SLABS, THE CONTRACTOR SHALL SUBMIT TO THE ENGINEER FOR REVIEW AND COMMENT, DETAILED DRAWINGS OF THE PROPOSED HOLD-DOWN SYSTEM. IN ADDITION TO STRUCTURAL DETAILS, LOCATION AND SPACING OF THE HOLD-DOWNS SHALL BE INDICATED.

ALL REINFORCING STEEL IN THE VERTICAL CONCRETE BARRIER RAIL SHALL BE EPOXY COATED.

PRESTRESSING STRANDS SHALL BE CUT FLUSH WITH THE CORED SLAB UNIT ENDS.

APPLY EPOXY PROTECTIVE COATING TO CORED SLAB UNIT ENDS.

GROOVED CONTRACTION JOINTS, 1/2″ IN DEPTH, SHALL BE TOOLED IN ALL EXPOSED FACES OF THE BARRIER RAIL AND IN ACCORDANCE WITH ARTICLE 825-10(B) OF THE STANDARD SPECIFICATIONS. A CONTRACTION JOINT SHALL BE LOCATED AT EACH THIRD POINT BETWEEN BARRIER RAIL EXPANSION JOINTS. ONLY ONE CONTRACTION JOINT IS REQUIRED AT MIDPOINT OF BARRIER RAIL SEGMENTS LESS THAN 20 FEET IN LENGTH AND NO CONTRACTION JOINTS ARE REQUIRED FOR THOSE SEGMENTS LESS THAN 10 FEET IN LENGTH.

TRANSVERSE POST TENSIONING OF THE CORED SLAB UNITS SHALL BE DONE IN ACCORDANCE WITH THE STANDARD SPECIFICATIONS.

THE TRANSFER OF LOAD FROM THE ANCHORAGES TO THE CORED SLAB UNIT SHALL BE DONE WHEN THE CONCRETE HAS REACHED A COMPRESSIVE STRENGTH OF NOT LESS THAN THE REQUIRED STRENGTH SHOWN IN THE "CONCRETE RELEASE STRENGTH" TABLE.

PLACEMENT OF THE CONCRETE WEARING SURFACE SHALL OCCUR AFTER CASTING THE CONCRETE RAIL. THE COST OF THE #3 BARS CAST WITH THE CONCRETE WEARING SURFACE SHALL BE INCLUDED IN THE UNIT PRICE BID FOR CONCRETE WEARING SURFACE. FOR CONCRETE WEARING SURFACE, SEE SPECIAL PROVISIONS.

FOR GROUT FOR STRUCTURES, SEE SPECIAL PROVISIONS.

PROJECT NO. 17BP.2.R.19
LENOIR COUNTY
STATION: 14+27.50 -L-

SHEET 5 OF 5

STATE OF NORTH CAROLINA
DEPARTMENT OF TRANSPORTATION
RALEIGH

# 3′-0″ X 1′-9″ PRESTRESSED CONCRETE CORED SLAB UNIT 105° SKEW

NORTH CAROLINA PROFESSIONAL SEAL 23005 ENGINEER KEITH PASCHAL
2-13-13

| REVISIONS | | | | | | SHEET NO. |
|---|---|---|---|---|---|---|
| NO. | BY: | DATE: | NO. | BY: | DATE: | S-8 |
| 1 | | | 3 | | | TOTAL SHEETS |
| 2 | | | 4 | | | 17 |

ASSEMBLED BY : E. K. POPE DATE : 2-1-13
CHECKED BY : R. KOUCHEKI DATE : 2-5-13
DRAWN BY : DGE 5/09 REV. 12/11 MAA/AAC
CHECKED BY : BCH 6/09

13-FEB-2013 08:45
S:\DPG1\Keith\17BP.2.R.19\ekpope\17BP2R19_SD_CS.dgn
kpaschal

STD. NO. 21″PCS3_39_105S

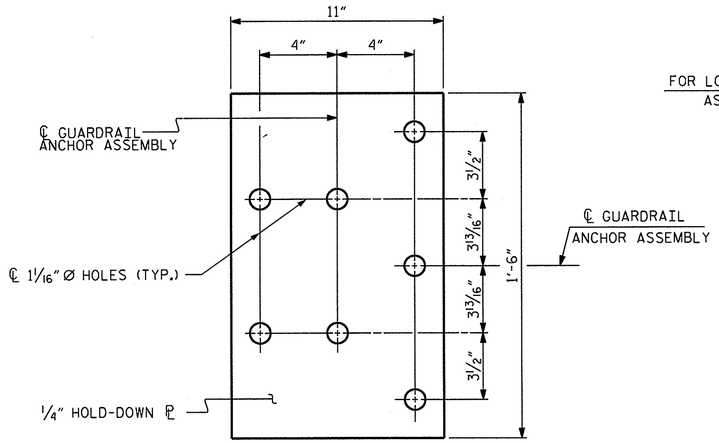


PLAN

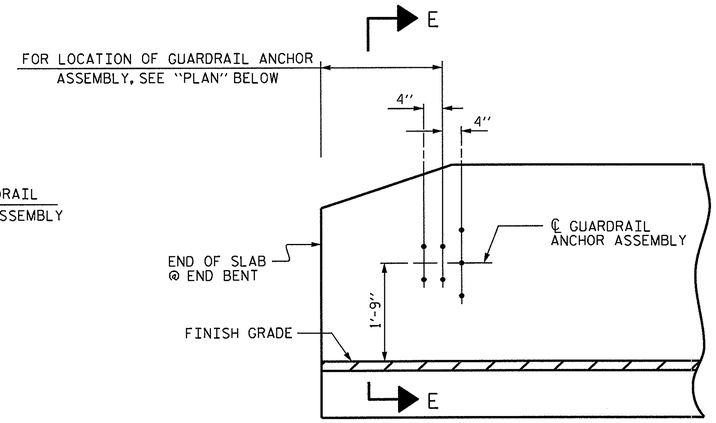


ELEVATION

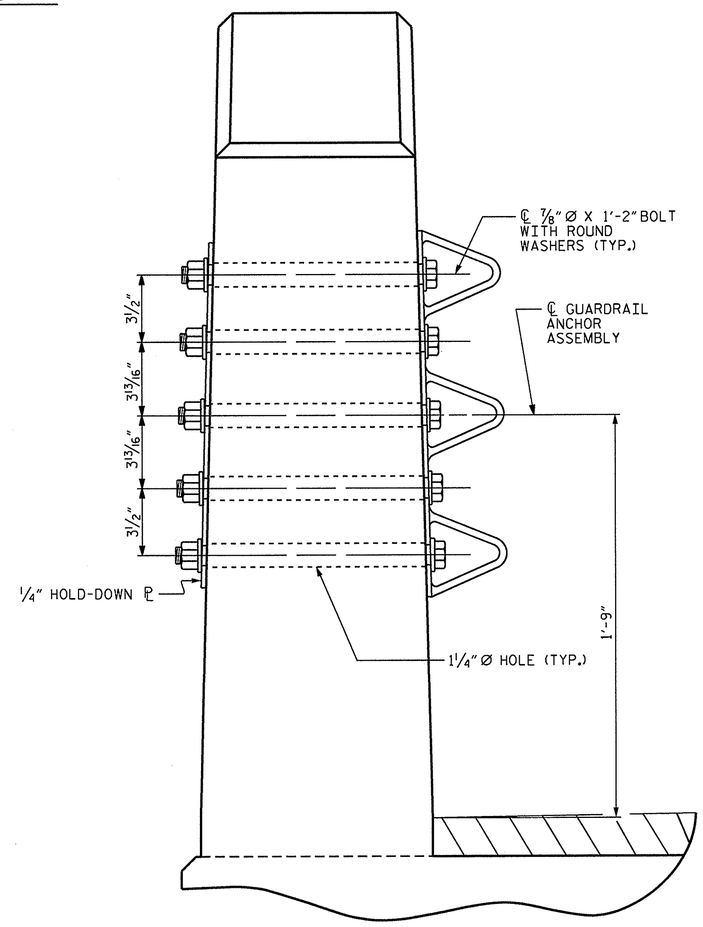


SECTION E-E

## GUARDRAIL ANCHOR ASSEMBLY DETAILS

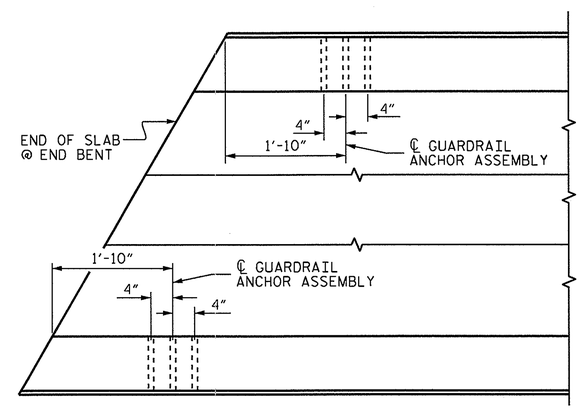


PLAN

## LOCATION OF ANCHORS FOR GUARDRAIL

END BENT 1 SHOWN, END BENT 2 SIMILAR.

## NOTES

THE GUARDRAIL ANCHOR ASSEMBLY SHALL CONSIST OF A 1/4" HOLD DOWN PLATE AND 7 - 7/8" Ø BOLTS WITH NUTS AND WASHERS.

THE HOLD-DOWN PLATE SHALL CONFORM TO AASHTO M270 GRADE 36. AFTER FABRICATION, THE HOLD-DOWN PLATE SHALL BE HOT-DIP GALVANIZED IN ACCORDANCE WITH AASHTO M111.

BOLTS SHALL CONFORM TO THE REQUIREMENTS OF ASTM A307 AND NUTS SHALL CONFORM TO THE REQUIREMENTS OF AASHTO M291. BOLTS, NUTS AND WASHERS SHALL BE GALVANIZED. (AT THE CONTRACTOR'S OPTION, STAINLESS STEEL BOLTS, NUTS AND WASHERS MAY BE USED AS AN ALTERNATE FOR THE 7/8" Ø GALVANIZED BOLTS, NUTS AND WASHERS. THEY SHALL CONFORM TO OR EXCEED THE MECHANICAL REQUIREMENTS OF ASTM A307. THE USE OF THIS ALTERNATE SHALL BE APPROVED BY THE ENGINEER.)

THE GUARDRAIL ANCHOR ASSEMBLY IS REQUIRED AT ALL POINTS WHERE APPROACH GUARDRAIL IS TO BE ATTACHED TO THE END OF BARRIER RAIL. FOR POINTS OF ATTACHMENT, SEE SKETCH.

AFTER INSTALLATION, THE EXPOSED THREAD OF THE BOLT SHALL BE BURRED WITH A SHARP POINTED TOOL.

THE COST OF THE GUARDRAIL ANCHOR ASSEMBLY SHALL BE INCLUDED IN THE UNIT CONTRACT PRICE BID FOR VERTICAL CONCRETE BARRIER RAIL.

THE VERTICAL REINFORCING BARS MAY BE SHIFTED SLIGHTLY IN THE VERTICAL CONCRETE BARRIER RAIL TO CLEAR ASSEMBLY BOLTS.

THE 1 1/4" Ø HOLES SHALL BE FORMED OR DRILLED WITH A CORE BIT. IMPACT TOOLS WILL NOT BE PERMITTED. ANY CONCRETE DAMAGED BY THIS WORK SHALL BE REPAIRED TO THE SATISFACTION OF THE ENGINEER.

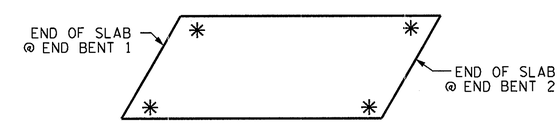


## SKETCH SHOWING POINTS OF ATTACHMENT

✳ DENOTES GUARDRAIL ANCHOR ASSEMBLY

PROJECT NO. 17BP.R.2.19

LENOIR COUNTY

STATION: 14+27.50 -L-

STATE OF NORTH CAROLINA
DEPARTMENT OF TRANSPORTATION
RALEIGH

STANDARD
GUARDRAIL ANCHORAGE FOR VERTICAL CONCRETE BARRIER RAIL

NORTH CAROLINA PROFESSIONAL SEAL 22005 ENGINEER KEITH PASCHAL
2-13-13

| REVISIONS | | | | | | | |
|---|---|---|---|---|---|---|---|
| NO. | BY: | DATE: | NO. | BY: | DATE: | | |
| 1 | | | 3 | | | | |
| 2 | | | 4 | | | | |

SHEET NO. S-9
TOTAL SHEETS 17

| | |
|---|---|
| ASSEMBLED BY : E. K. POPE | DATE : 9-21-12 |
| CHECKED BY : R. KOUCHEKI | DATE : 11-5-12 |
| DRAWN BY : MAA 5/10 | ADDED 5/6/10 |
| CHECKED BY : GM 5/10 | REV. 10/1/11 MAA/GM |
| | REV. 12/5/11 MAA/GM |

13-FEB-2013 08:45
S:\DPG1\Keith\17BP.2.R.19\ekpope\17BP2R19_SD_CS.dgn
kpaschal

(SHT 2) STD. NO. GRA3

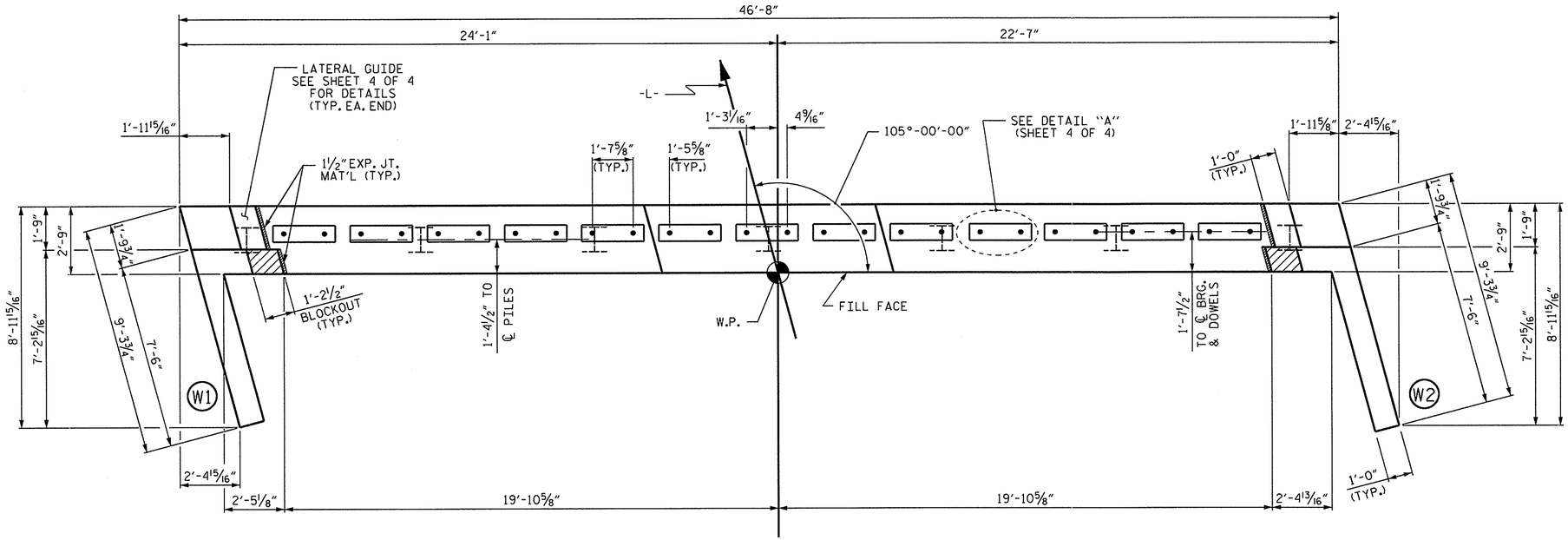


## PLAN

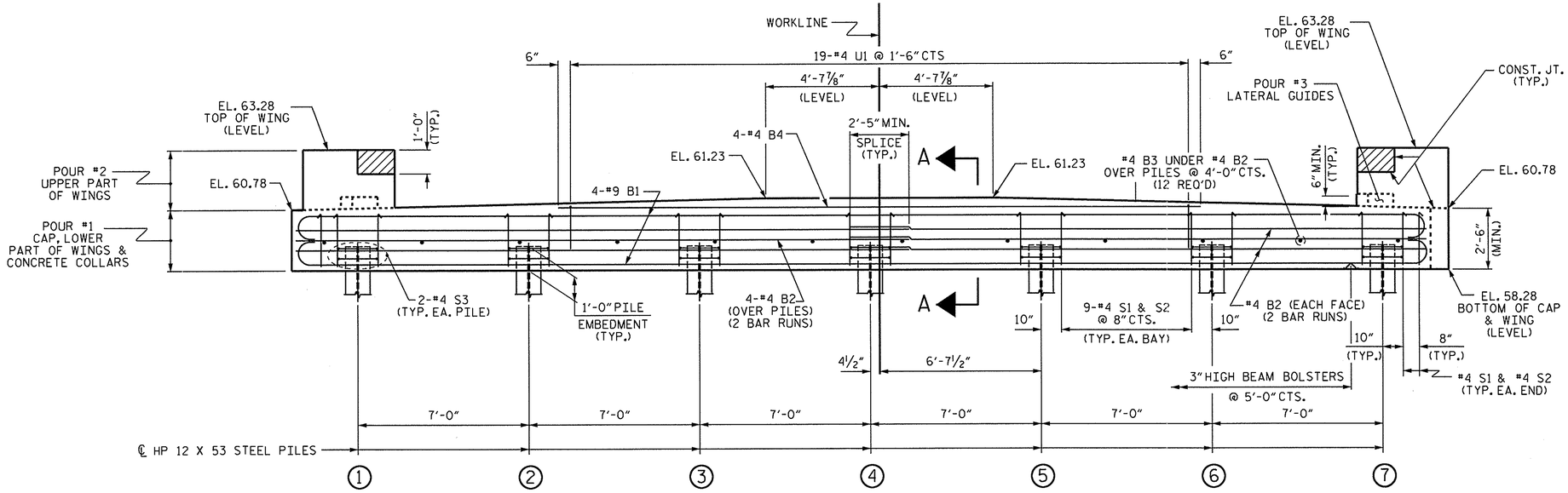


## ELEVATION

WINGS NOT SHOWN FOR CLARITY.
FOR SECTION A-A, SEE SHEET 4 OF 4.
CONCRETE COLLARS FOR STEEL PILES NOT SHOWN IN PLAN AND ELEVATION VIEWS FOR CLARITY.
SEE "CORROSION PROTECTION FOR STEEL PILES DETAIL", SHEET 4 OF 4.

## NOTES

STIRRUPS IN CAP MAY BE SHIFTED AS NECESSARY TO CLEAR DOWELS.

THE LATERAL GUIDES ARE NOT TO BE POURED UNTIL AFTER THE CORED SLAB UNITS ARE IN PLACE.

THE CONCRETE IN THE SHADED AREA OF THE WING SHALL BE POURED AFTER THE VERTICAL CONCRETE BARRIER RAIL IS CAST IF SLIP FORMING IS USED.

FOR PILE SPLICE DETAILS, SEE SHEET 4 OF 4.

FOR WING DETAILS, SEE SHEET 3 OF 4.

THE CONTRACTOR HAS THE OPTION TO OMIT THE LATERAL GUIDE IF APPROVED BY THE ENGINEER.

INSTALL THE 4"Ø DRAIN PIPE THROUGH THE WING WALL AS REQUIRED FOR REINFORCED BRIDGE APPROACH FILLS, SEE THE ROADWAY PLANS. REINFORCING STEEL IN THE WING WALL MAY BE SHIFTED AS NECESSARY TO CLEAR THE DRAIN PIPE.

PROJECT NO. 17BP.2.R.19
LENOIR COUNTY
STATION: 14+27.50 -L-

SHEET 1 OF 4

STATE OF NORTH CAROLINA
DEPARTMENT OF TRANSPORTATION
RALEIGH

SUBSTRUCTURE

END BENT No. 1

NORTH CAROLINA PROFESSIONAL SEAL 22005 ENGINEER K. KEITH PASCHAL
2-13-13

| ASSEMBLED BY : E.K. POPE | DATE : 2-1-13 |
|---|---|
| CHECKED BY : R. KOUCHEKI | DATE : 2-5-13 |
| DRAWN BY : DGE 03/10 | |
| CHECKED BY : MKT 03/10 | |

| REVISIONS | | | | | | | SHEET NO. |
|---|---|---|---|---|---|---|---|
| NO. | BY: | DATE: | NO. | BY: | DATE: | | S-10 |
| 1 | | | 3 | | | | TOTAL SHEETS |
| 2 | | | 4 | | | | 17 |

13-FEB-2013 10:17
S:\DPG1\Keith\17BP.2.R.19\ekpope\17BP2R19_SD_CS.dgn
kpaschal

STD. NO. EB_39_105S

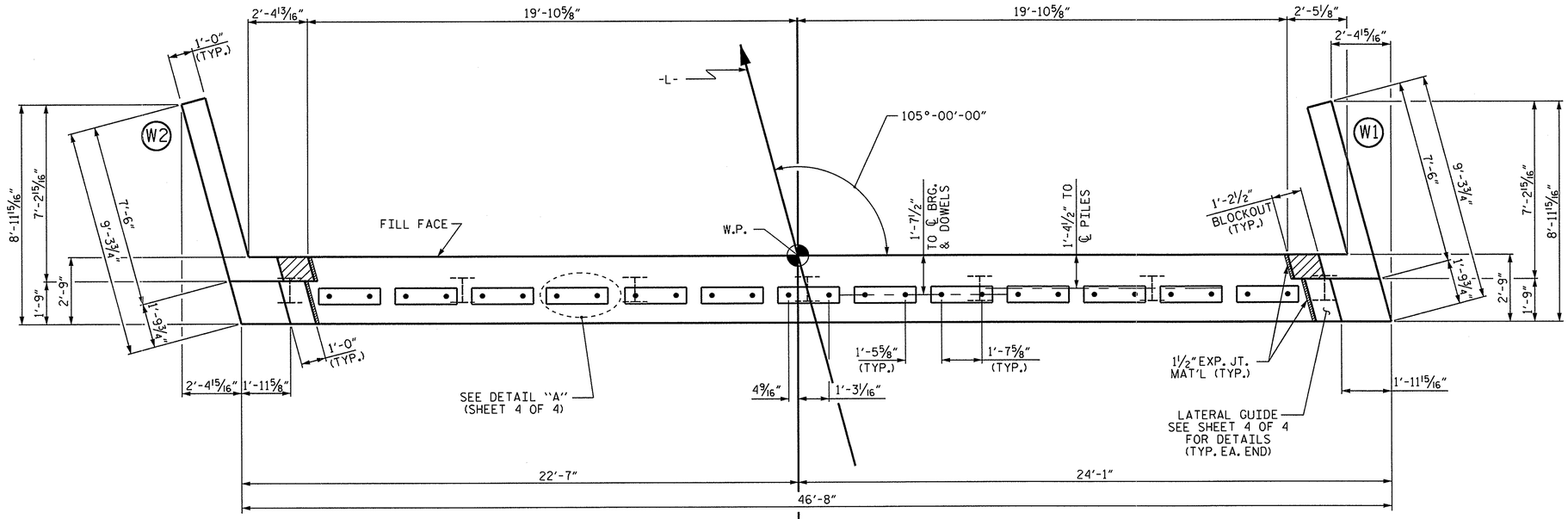


## PLAN

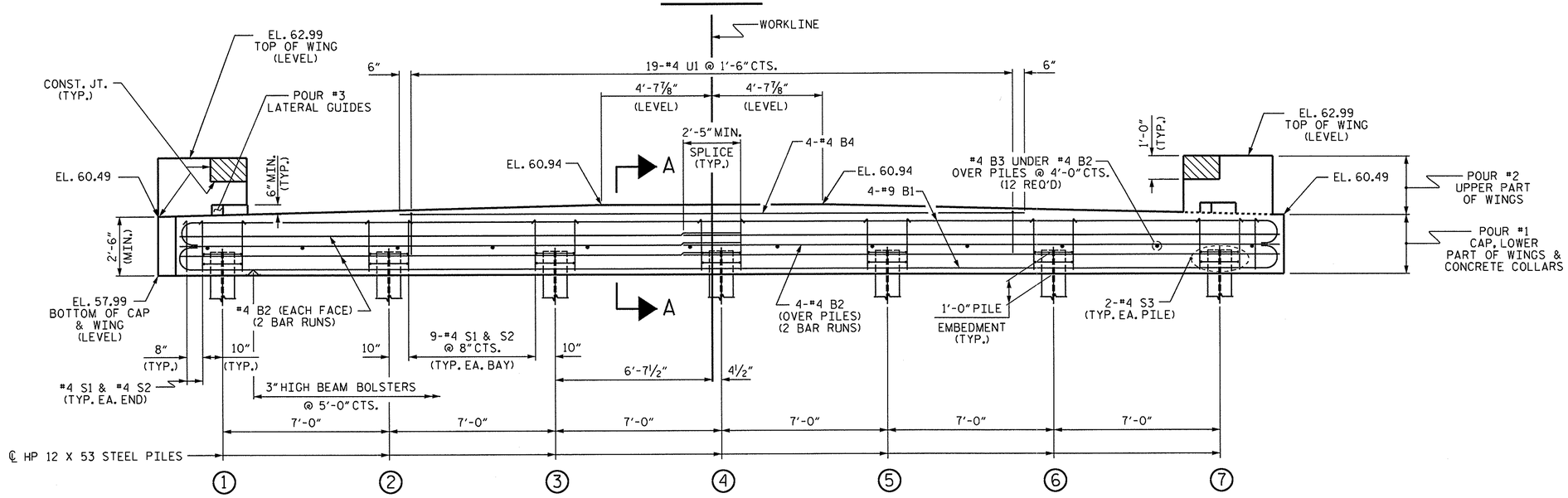


## ELEVATION

WINGS NOT SHOWN FOR CLARITY.
FOR SECTION A-A, SEE SHEET 4 OF 4.
CONCRETE COLLARS FOR STEEL PILES NOT SHOWN IN PLAN AND ELEVATION VIEWS FOR CLARITY.
SEE "CORROSION PROTECTION FOR STEEL PILES DETAIL", SHEET 4 OF 4.

## NOTES

STIRRUPS IN CAP MAY BE SHIFTED AS NECESSARY TO CLEAR DOWELS.

THE LATERAL GUIDES ARE NOT TO BE POURED UNTIL AFTER THE CORED SLAB UNITS ARE IN PLACE.

THE CONCRETE IN THE SHADED AREA OF THE WING SHALL BE POURED AFTER THE VERTICAL CONCRETE BARRIER RAIL IS CAST IF SLIP FORMING IS USED.

FOR PILE SPLICE DETAILS, SEE SHEET 4 OF 4.

FOR WING DETAILS, SEE SHEET 3 OF 4.

THE CONTRACTOR HAS THE OPTION TO OMIT THE LATERAL GUIDE IF APPROVED BY THE ENGINEER.

INSTALL THE 4"Ø DRAIN PIPE THROUGH THE WING WALL AS REQUIRED FOR REINFORCED BRIDGE APPROACH FILLS, SEE THE ROADWAY PLANS. REINFORCING STEEL IN THE WING WALL MAY BE SHIFTED AS NECESSARY TO CLEAR THE DRAIN PIPE.

PROJECT NO. 17BP.2.R.19
LENOIR COUNTY
STATION: 14+27.50 -L-

SHEET 2 OF 4

STATE OF NORTH CAROLINA
DEPARTMENT OF TRANSPORTATION
RALEIGH

SUBSTRUCTURE
END BENT No. 2

| | |
|---|---|
| ASSEMBLED BY : E. K. POPE | DATE : 2-1-13 |
| CHECKED BY : R. KOUCHEKI | DATE : 2-5-13 |
| DRAWN BY : DGE 03/10 | |
| CHECKED BY : MKT 03/10 | |

| REVISIONS | | | | | | | | SHEET NO. |
|---|---|---|---|---|---|---|---|---|
| NO. | BY: | DATE: | NO. | BY: | DATE: | | | S-11 |
| 1 | | | 3 | | | | | TOTAL SHEETS |
| 2 | | | 4 | | | | | 17 |

NORTH CAROLINA PROFESSIONAL SEAL 22005 ENGINEER KEITH PASCHAL
2-13-13

13-FEB-2013 08:43
S:\DPG1\Keith\17BP.2.R.19\ekpope\17BP2R19_SD_CS.dgn
kpaschal

STD. NO. EB_39_105S

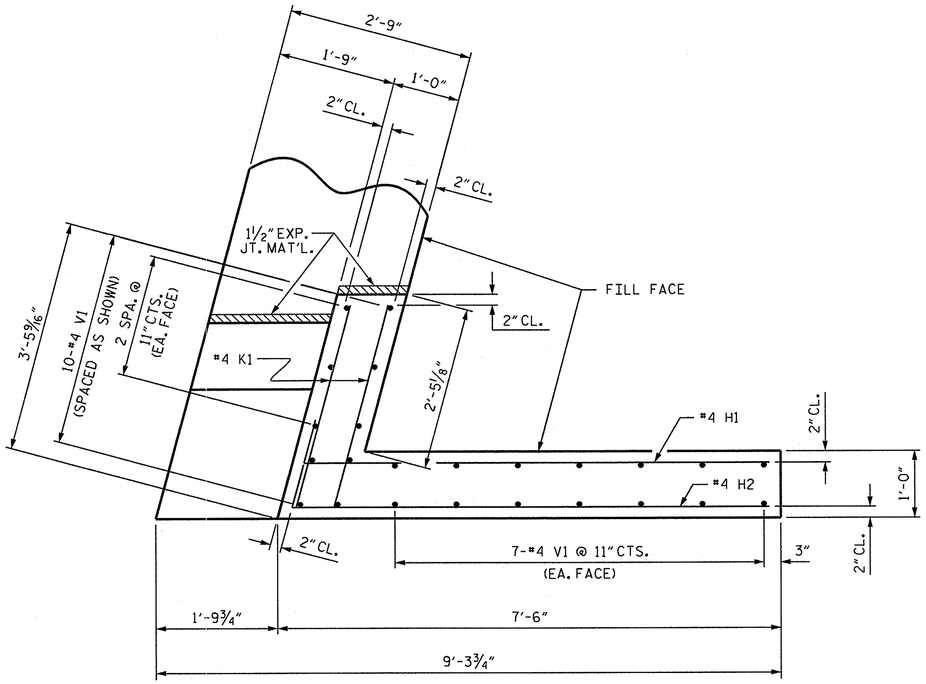


PLAN OF WING (W1)

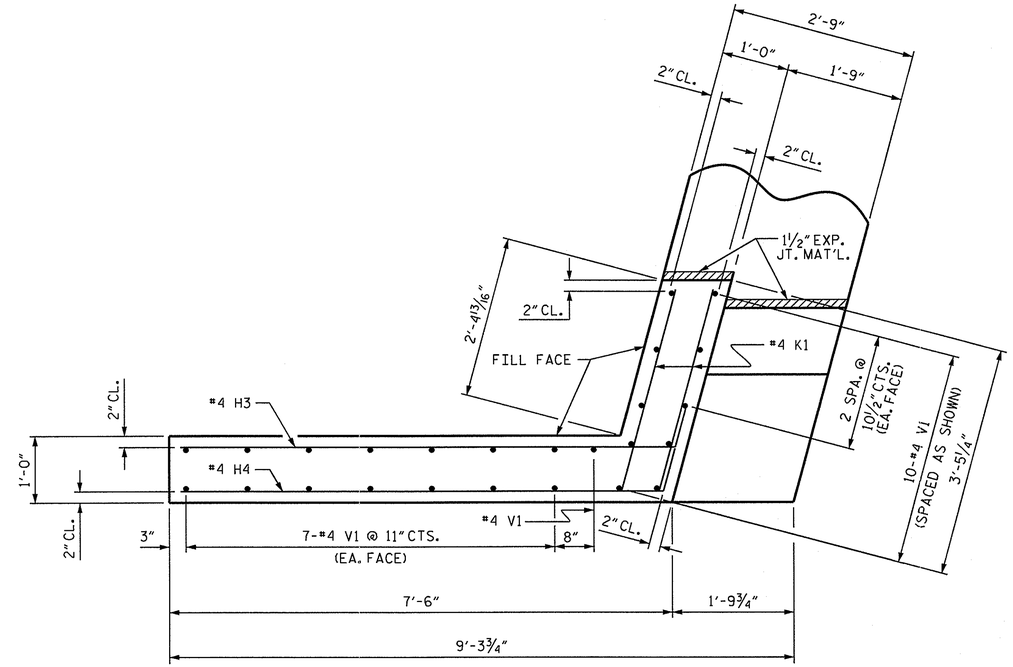


PLAN OF WING (W2)

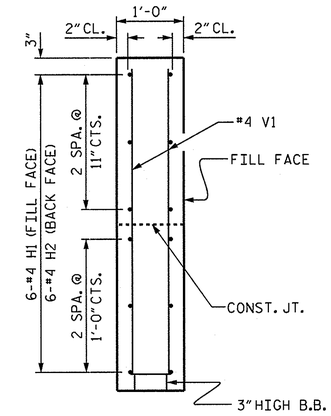


SECTION X-X

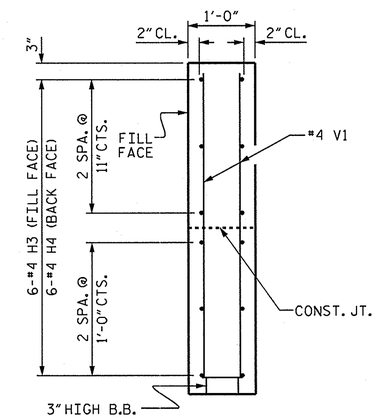


SECTION Y-Y

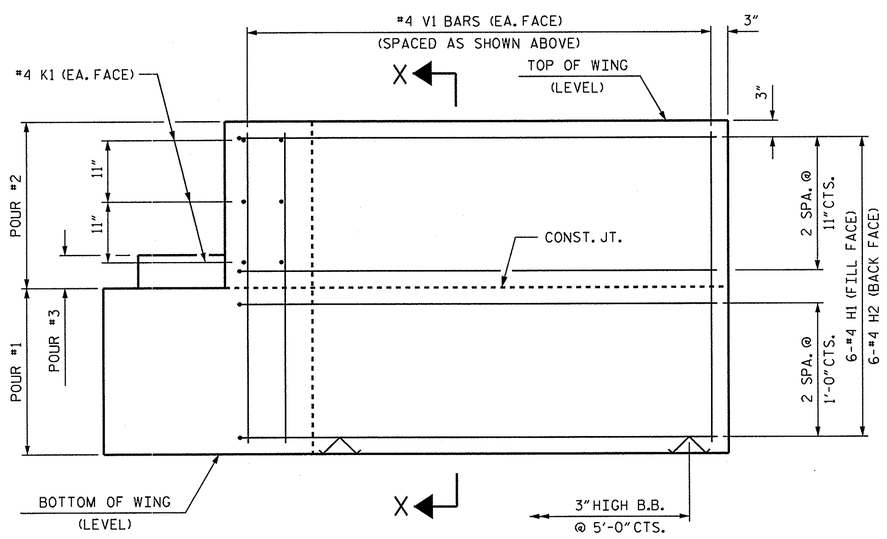


ELEVATION OF WING (W1)

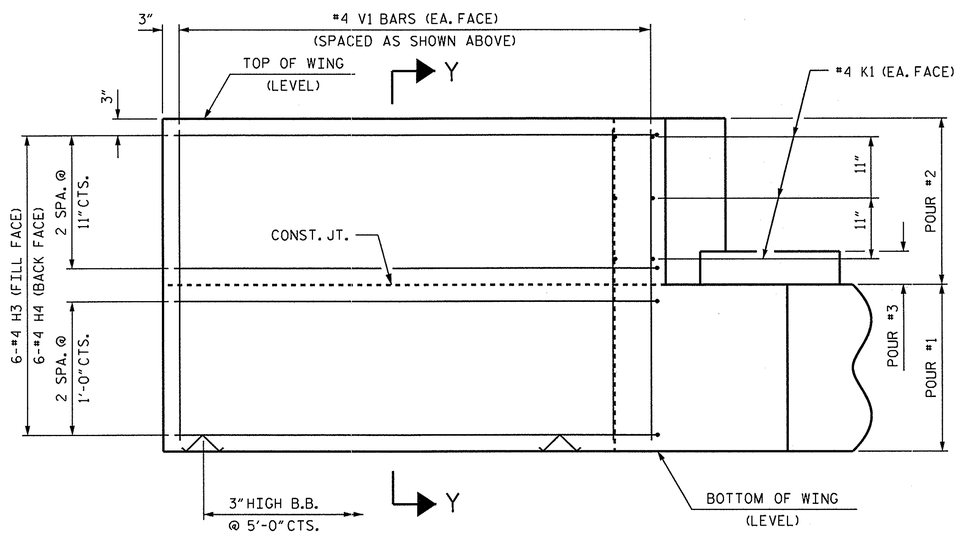


ELEVATION OF WING (W2)

WING DETAILS

PROJECT NO. 17BP.2.R.19
LENOIR COUNTY
STATION: 14+27.50 -L-

SHEET 3 OF 4

STATE OF NORTH CAROLINA
DEPARTMENT OF TRANSPORTATION
RALEIGH

SUBSTRUCTURE
END BENT
WING DETAILS

| | |
|---|---|
| ASSEMBLED BY : E. K. POPE | DATE : 9-21-12 |
| CHECKED BY : R. KOUCHEKI | DATE : 1-28-13 |
| DRAWN BY : DGE 03/10 | |
| CHECKED BY : MKT 03/10 | |

| REVISIONS | | | | | | | | SHEET NO. |
|---|---|---|---|---|---|---|---|---|
| NO. | BY: | DATE: | NO. | BY: | DATE: | | | S-12 |
| 1 | | | 3 | | | | | TOTAL SHEETS |
| 2 | | | 4 | | | | | 17 |

NORTH CAROLINA PROFESSIONAL SEAL 20005 ENGINEER A. KEITH PASCHAL
2.13.13

13-FEB-2013 08:43
S:\DPG1\Keith\17BP.2.R.19\ekpope\17BP2R19_SD_CS.dgn
kpaschal

STD. NO. EB_39_105S

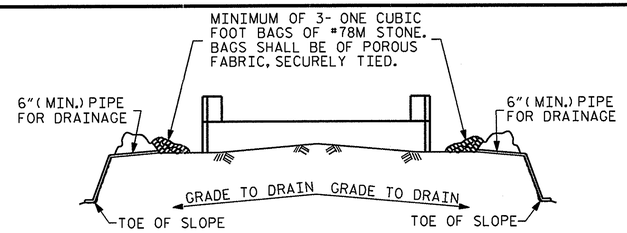


BAGGED STONE AND PIPE SHALL BE PLACED IMMEDIATELY AFTER COMPLETION OF END BENT EXCAVATION. PIPE MAY BE EITHER CONCRETE, CORRUGATED STEEL, CORRUGATED ALUMINUM ALLOY, OR CORRUGATED PLASTIC. PERFORATED PIPE WILL NOT BE ALLOWED.

BAGGED STONE SHALL REMAIN IN PLACE UNTIL THE ENGINEER DIRECTS THAT IT BE REMOVED. THE CONTRACTOR SHALL REMOVE AND DISPOSE OF SILT ACCUMULATIONS AT BAGGED STONE WHEN SO DIRECTED BY THE ENGINEER. BAGS SHALL BE REMOVED AND REPLACED WHENEVER THE ENGINEER DETERMINES THAT THEY HAVE DETERIORATED AND LOST THEIR EFFECTIVENESS.

NO SEPARATE PAYMENT WILL BE MADE FOR THIS WORK AND THE ENTIRE COST OF THIS WORK SHALL BE INCLUDED IN THE UNIT CONTRACT PRICE BID FOR THE SEVERAL PAY ITEMS.

## TEMPORARY DRAINAGE AT END BENT

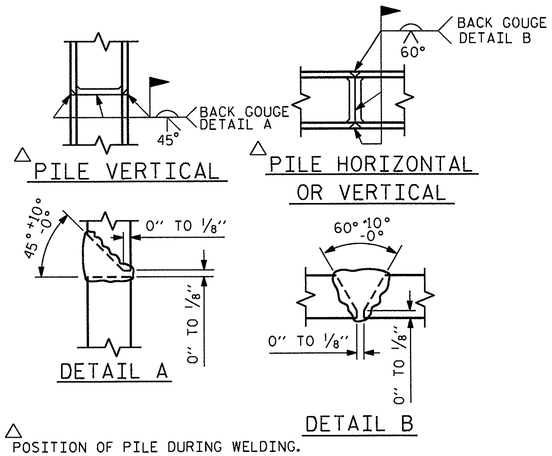


△ POSITION OF PILE DURING WELDING.

## PILE SPLICE DETAILS

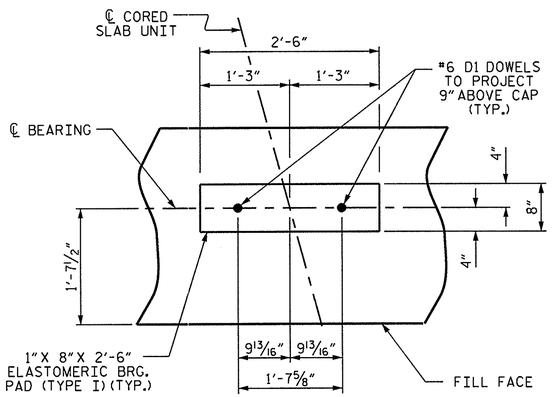


## DETAIL "A"

(END BENT No. 1 SHOWN, END BENT No. 2 SIMILAR BY ROTATION)

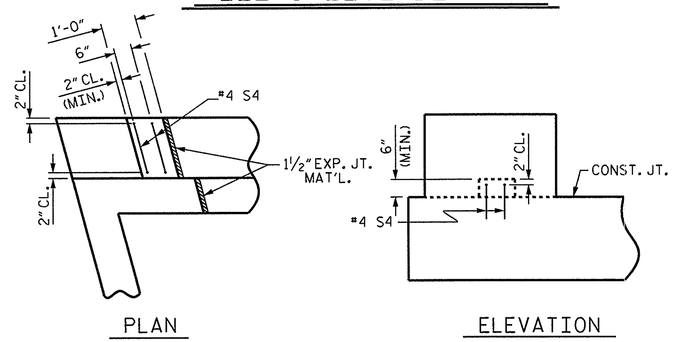


## LATERAL GUIDE DETAILS

(END BENT No. 1, LEFT LATERAL GUIDE SHOWN, RIGHT END SIMILAR)
(END BENT No. 2 SIMILAR BY ROTATION)

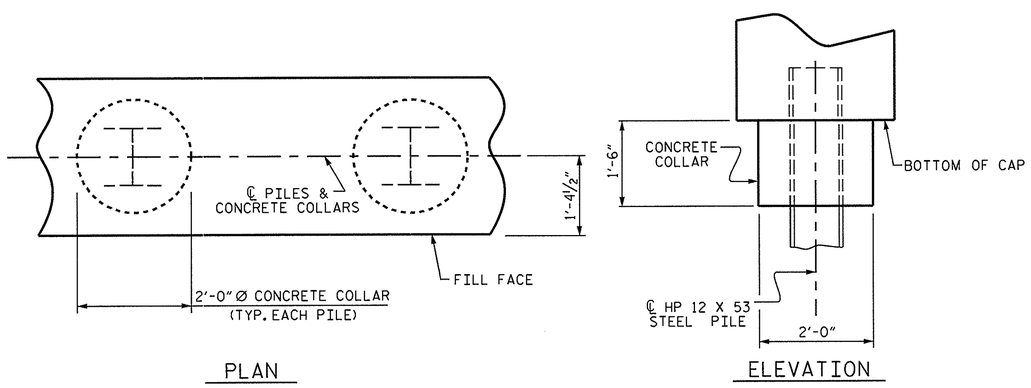


## CORROSION PROTECTION FOR STEEL PILES DETAIL

(END BENT No. 1 SHOWN, END BENT No. 2 SIMILAR BY ROTATION)

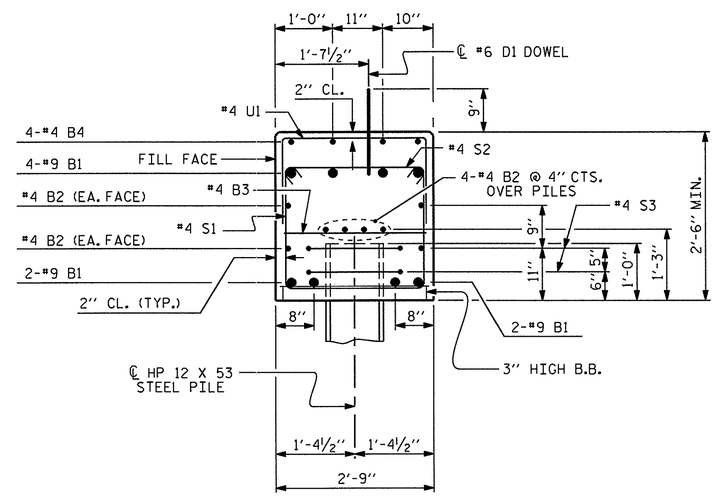


## SECTION A-A

(CONCRETE COLLAR NOT SHOWN FOR CLARITY.
SEE "CORROSION PROTECTION FOR STEEL PILES DETAIL.")

## BAR TYPES

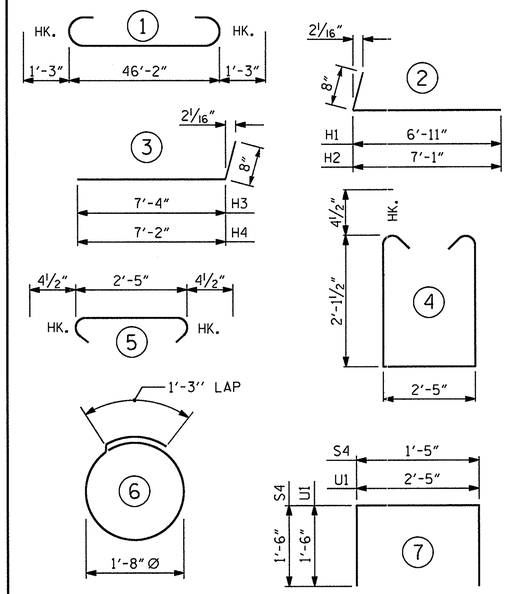


ALL BAR DIMENSIONS ARE OUT TO OUT.

| END BENT No. 1 | END BENT No. 2 |
|---|---|
| HP 12 X 53 STEEL PILES | HP 12 X 53 STEEL PILES |
| NO: 7 LIN. FT.= 315 | NO: 7 LIN. FT.= 315 |
| PILE REDRIVES EA. NO.= 2 | PILE REDRIVES EA. NO.= 2 |

## BILL OF MATERIAL FOR ONE END BENT

| BAR | NO. | SIZE | TYPE | LENGTH | WEIGHT |
|---|---|---|---|---|---|
| B1 | 8 | #9 | 1 | 48'-8" | 1324 |
| B2 | 16 | #4 | STR | 24'-5" | 261 |
| B3 | 12 | #4 | STR | 2'-5" | 19 |
| B4 | 4 | #4 | STR | 28'-0" | 75 |
| D1 | 26 | #6 | STR | 1'-6" | 59 |
| H1 | 6 | #4 | 2 | 7'-7" | 30 |
| H2 | 6 | #4 | 2 | 7'-9" | 31 |
| H3 | 6 | #4 | 3 | 8'-0" | 32 |
| H4 | 6 | #4 | 3 | 7'-10" | 31 |
| K1 | 12 | #4 | STR | 3'-1" | 25 |
| S1 | 58 | #4 | 4 | 7'-5" | 287 |
| S2 | 58 | #4 | 5 | 3'-2" | 123 |
| S3 | 14 | #4 | 6 | 6'-6" | 61 |
| S4 | 4 | #4 | 7 | 4'-5" | 12 |
| U1 | 19 | #4 | 7 | 5'-5" | 69 |
| V1 | 49 | #4 | STR | 4'-8" | 153 |
| REINFORCING STEEL (FOR ONE END BENT) | | | | | 2592 LBS. |

| CLASS A CONCRETE BREAKDOWN (FOR ONE END BENT) | |
|---|---|
| POUR #1 CAP, LOWER PART OF WINGS & COLLARS | 15.6 C.Y. |
| POUR #2 UPPER PART OF WINGS | 1.8 C.Y. |
| POUR #3 LATERAL GUIDES | 0.1 C.Y. |
| TOTAL CLASS A CONCRETE | 17.5 C.Y. |

PROJECT NO. 17BP.2.R.19
LENOIR COUNTY
STATION: 14+27.50 -L-

SHEET 4 OF 4

STATE OF NORTH CAROLINA
DEPARTMENT OF TRANSPORTATION
RALEIGH

SUBSTRUCTURE

END BENT No. 1 & 2 DETAILS

NORTH CAROLINA PROFESSIONAL SEAL 22005 ENGINEER KEITH PASCHAL
2.13.13

| REVISIONS | | | | | | | SHEET NO. |
|---|---|---|---|---|---|---|---|
| NO. | BY: | DATE: | NO. | BY: | DATE: | | S-13 |
| 1 | | | 3 | | | | TOTAL SHEETS |
| 2 | | | 4 | | | | 17 |

| | | |
|---|---|---|
| ASSEMBLED BY : E. K. POPE | DATE : 1-22-13 | |
| CHECKED BY : R. KOUCHEKI | DATE : 1-28-13 | |
| DRAWN BY : DGE 03/10 | | |
| CHECKED BY : MKT 03/10 | | |

13-FEB-2013 08:42
S:\DPG1\Keith\17BP.2.R.19\ekpope\17BP2R19_SD_CS.dgn
kpaschal

STD. NO. EB_39_105S

## NOTES

STIRRUPS IN CAP MAY BE SHIFTED AS NECESSARY TO CLEAR DOWELS.

THE LATERAL GUIDES ARE NOT TO BE POURED UNTIL AFTER THE CORED SLAB UNITS ARE IN PLACE.

★ INVERT ALTERNATE STIRRUPS.

GALVANIZE THE FULL LENGTH OF EACH INTERIOR BENT PILE IN ACCORDANCE WITH SECTION 1076 OF THE STANDARD SPECIFICATIONS.

THE CONTRACTOR HAS THE OPTION TO OMIT THE LATERAL GUIDE IF APPROVED BY THE ENGINEER.

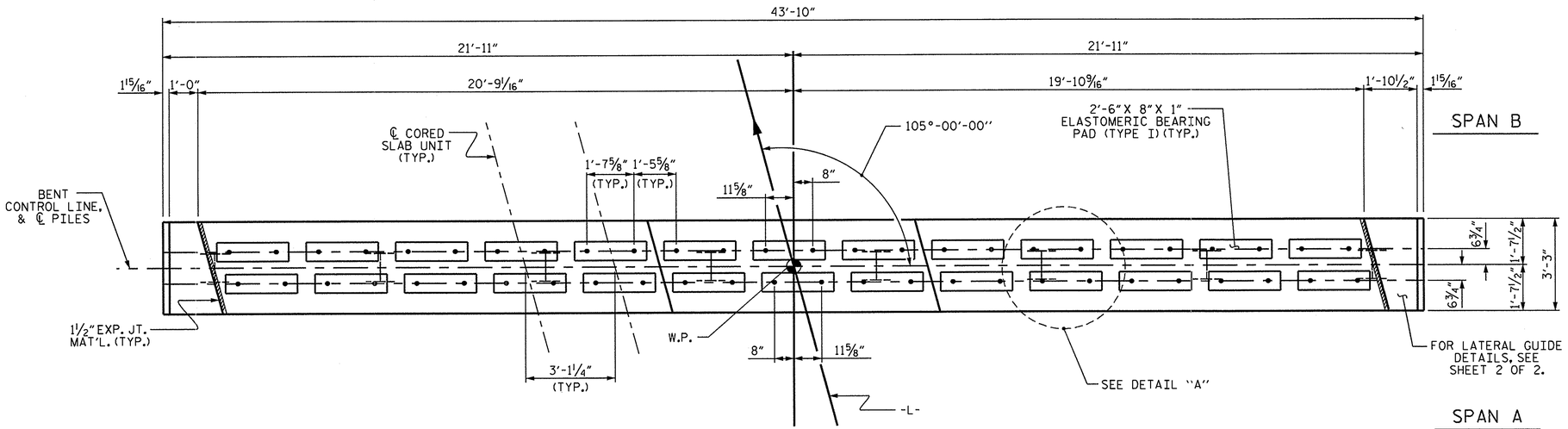


PLAN

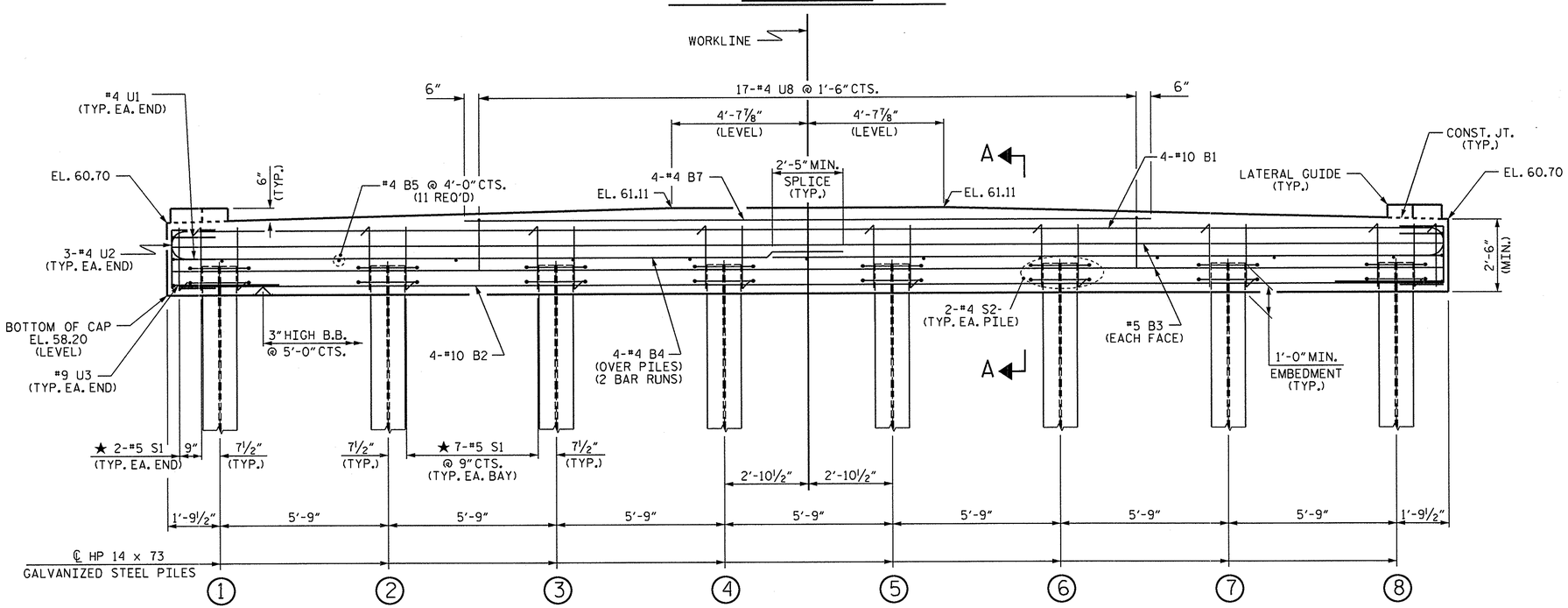


FOR SECTION A-A, SEE SHEET 2 OF 2

ELEVATION

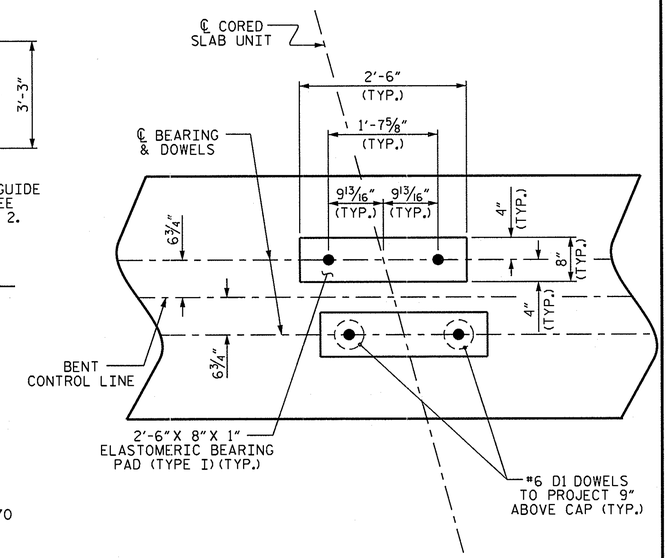


DETAIL "A"

(DIMENSIONS ARE TYPICAL EACH BEARING)

PROJECT NO. 17BP.2.R.19

LENOIR COUNTY

STATION: 14+27.50 -L-

SHEET 1 OF 2

STATE OF NORTH CAROLINA
DEPARTMENT OF TRANSPORTATION
RALEIGH

SUBSTRUCTURE

BENT No. 1

NORTH CAROLINA PROFESSIONAL SEAL 12005 ENGINEER ANDREA KEITH PASCHAL 2-13-13

| REVISIONS | | | | | | SHEET NO. |
|---|---|---|---|---|---|---|
| NO. | BY: | DATE: | NO. | BY: | DATE: | S-14 |
| 1 | | | 3 | | | TOTAL SHEETS |
| 2 | | | 4 | | | 17 |

| | | | |
|---|---|---|---|
| ASSEMBLED BY : | E. K. POPE | DATE : | 2-1-13 |
| CHECKED BY : | R. KOUCHEKI | DATE : | 2-5-13 |
| DRAWN BY : | DGE 5/10 | | |
| CHECKED BY : | MKT 5/10 | | |

13-FEB-2013 08:42
S:\DPG1\Keith\17BP.2.R.19\ekpope\17BP2R19_SD_CS.dgn
kpaschal

STD. NO. 14" HP_BT_39_105S_<60'

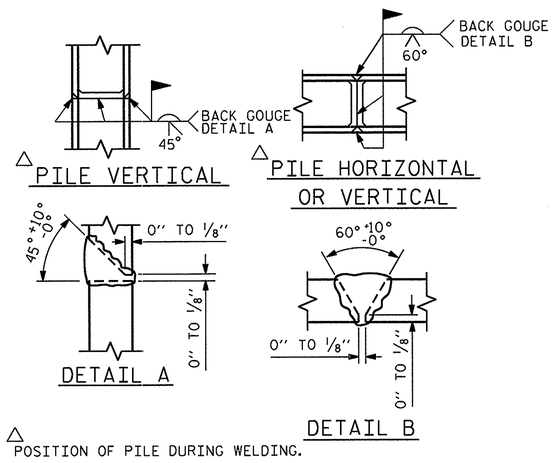


## PILE SPLICE DETAILS

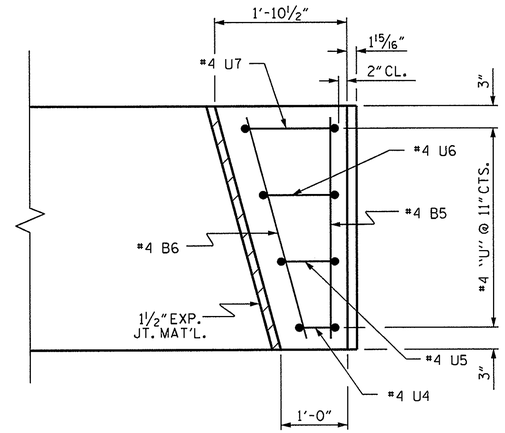


PLAN

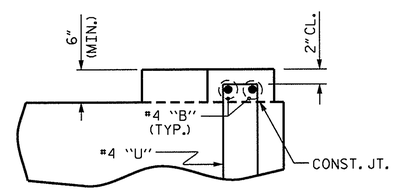


ELEVATION

## LATERAL GUIDE DETAILS

(RIGHT LATERAL GUIDE SHOWN, LEFT SIDE SIMILAR)

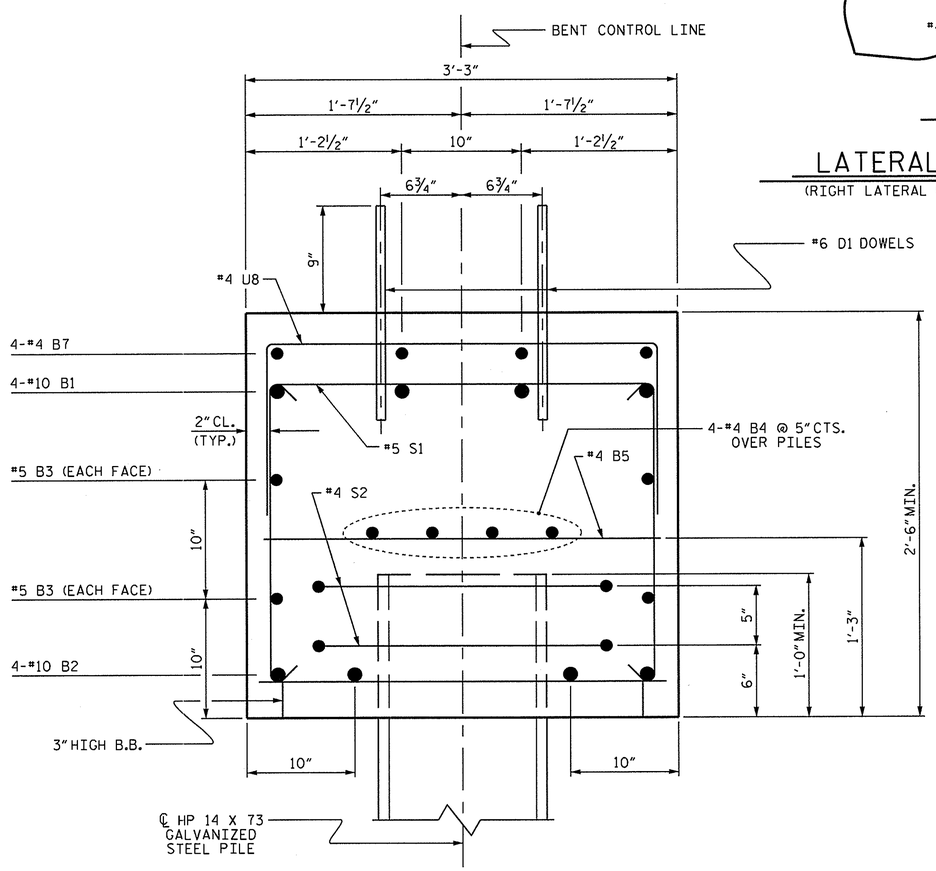


## SECTION A-A

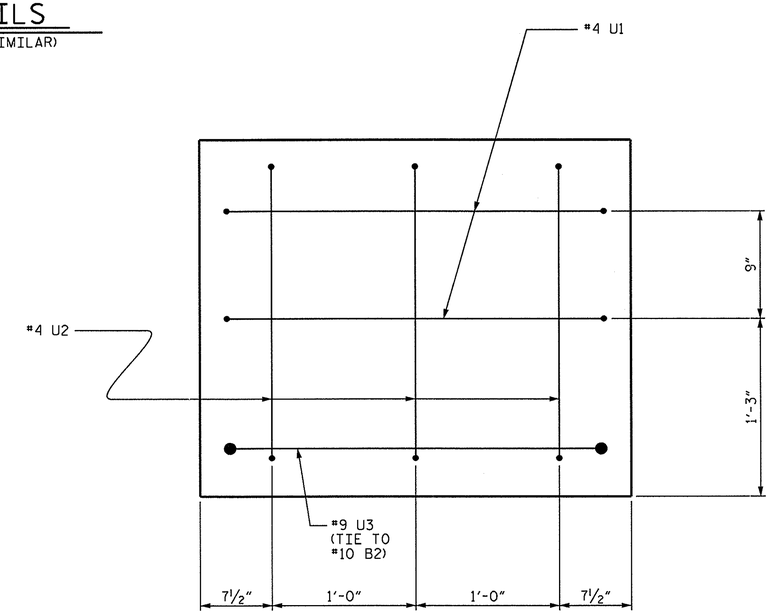


## END OF CAP VIEW

(TYPICAL BOTH ENDS)

## BAR TYPES

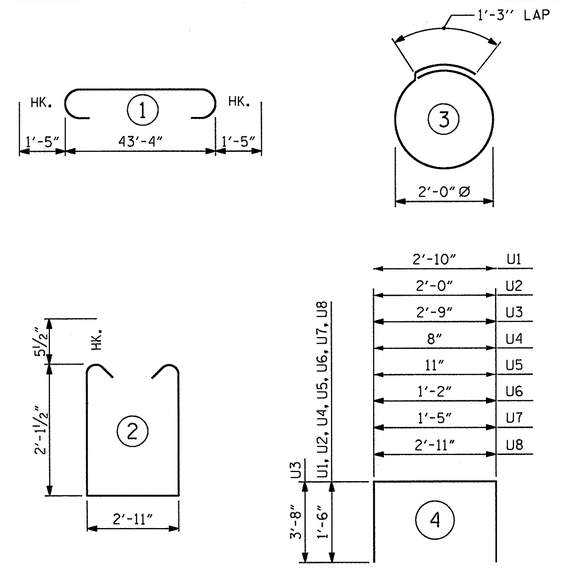


ALL BAR DIMENSIONS ARE OUT TO OUT.

## BILL OF MATERIAL

### FOR ONE BENT

| BAR | NO. | SIZE | TYPE | LENGTH | WEIGHT |
|---|---|---|---|---|---|
| B1 | 4 | #10 | 1 | 46'-2" | 795 |
| B2 | 4 | #10 | STR | 43'-6" | 749 |
| B3 | 4 | #5 | STR | 43'-6" | 181 |
| B4 | 8 | #4 | STR | 23'-0" | 123 |
| B5 | 13 | #4 | STR | 2'-11" | 25 |
| B6 | 2 | #4 | STR | 3'-0" | 4 |
| B7 | 4 | #4 | STR | 25'-0" | 67 |
| | | | | | |
| D1 | 52 | #6 | STR | 1'-6" | 117 |
| | | | | | |
| S1 | 53 | #5 | 2 | 8'-1" | 447 |
| S2 | 16 | #4 | 3 | 7'-7" | 81 |
| | | | | | |
| U1 | 4 | #4 | 4 | 5'-10" | 16 |
| U2 | 6 | #4 | 4 | 5'-0" | 20 |
| U3 | 2 | #9 | 4 | 10'-1" | 69 |
| U4 | 2 | #4 | 4 | 3'-8" | 5 |
| U5 | 2 | #4 | 4 | 3'-11" | 5 |
| U6 | 2 | #4 | 4 | 4'-2" | 6 |
| U7 | 2 | #4 | 4 | 4'-5" | 6 |
| U8 | 17 | #4 | 4 | 5'-11" | 67 |

REINFORCING STEEL (FOR ONE BENT) 2783 LBS

CLASS A CONCRETE BREAKDOWN (FOR ONE BENT)

POUR #1 (CAP) 14.7 C.Y.
POUR #2 (LATERAL GUIDES) 0.2 C.Y.

TOTAL CLASS A CONCRETE 14.9 C.Y.

HP 14 X 73 GALVANIZED STEEL PILES (FOR ONE BENT)
NO. 8 LIN. FT.= 360
PILE REDRIVES EA. NO.= 3

PROJECT NO. 17BP.2.R.19
LENOIR COUNTY
STATION: 14+27.50 -L-

SHEET 2 OF 2

STATE OF NORTH CAROLINA
DEPARTMENT OF TRANSPORTATION
RALEIGH

SUBSTRUCTURE

BENT No. 1

NORTH CAROLINA PROFESSIONAL SEAL 22005 ENGINEER KEITH PASCHAL
2.13.13

| REVISIONS | | | | | | | | SHEET NO. |
|---|---|---|---|---|---|---|---|---|
| NO. | BY: | DATE: | NO. | BY: | DATE: | | | S-15 |
| 1 | | | 3 | | | | | TOTAL SHEETS |
| 2 | | | 4 | | | | | 17 |

DRAWN BY : E. K. POPE DATE : 1-22-13
CHECKED BY : R. KOUCHEKI DATE : 1-28-13

DRAWN BY : DGE 05/10
CHECKED BY : MKT 05/10

13-FEB-2013 08:42
S:\DPG1\Keith\17BP.2.R.19\ekpope\17BP2R19_SD_CS.dgn
kpaschal

STD. NO. 14" HP_BT_39_105S_<60'

NOTES :

FOR BERM WIDTH DIMENSIONS, SEE GENERAL DRAWING.

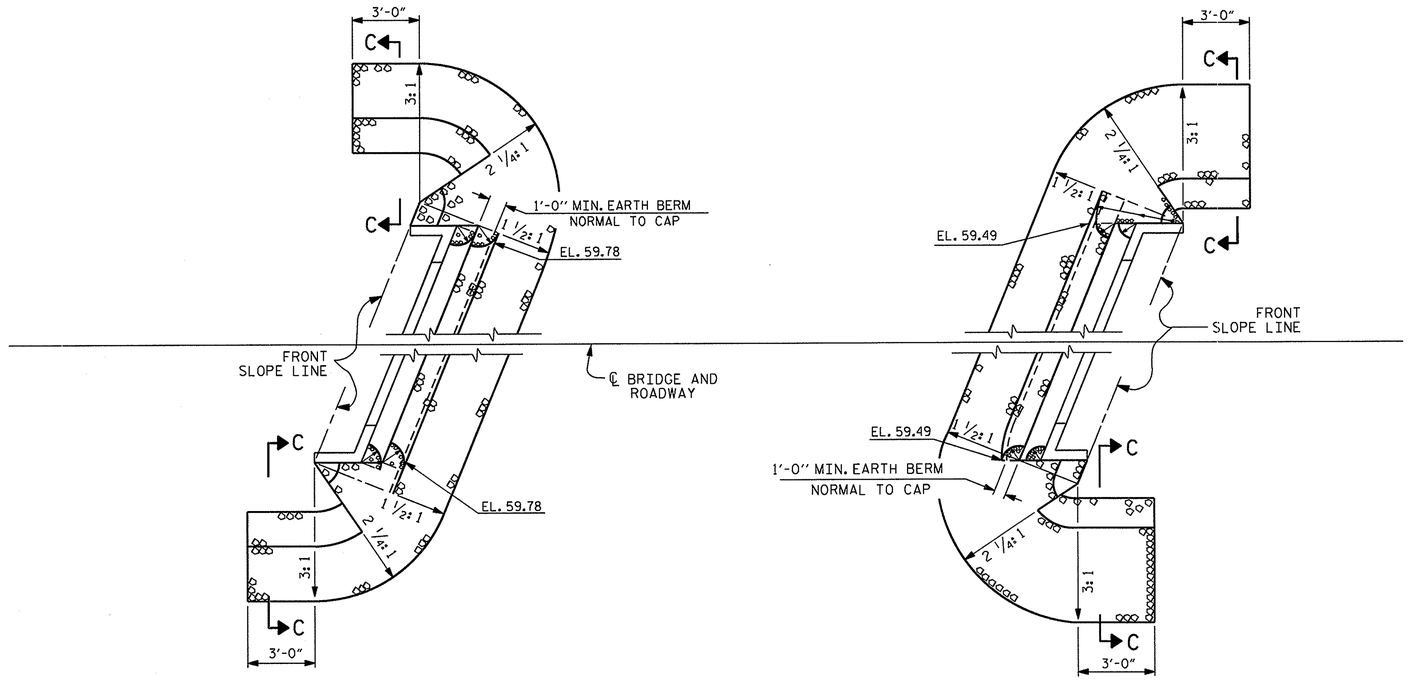


END BENT 1

END BENT 2

## PLAN OF RIP RAP

| ESTIMATED QUANTITIES | | |
|---|---|---|
| BRIDGE @ STA. 14+27.50 -L- | RIP RAP CLASS II (2'-0" THICK) | GEOTEXTILE FOR DRAINAGE |
| | TONS | SQUARE YARDS |
| END BENT 1 | 117 | 131 |
| END BENT 2 | 132 | 142 |

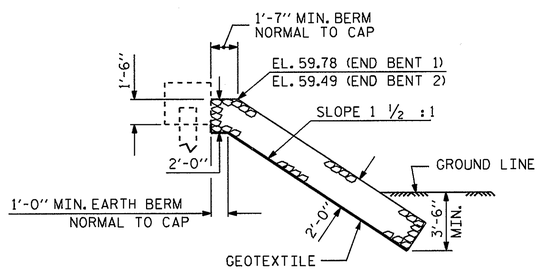


℄ SECTION

BERM RIP RAPPED

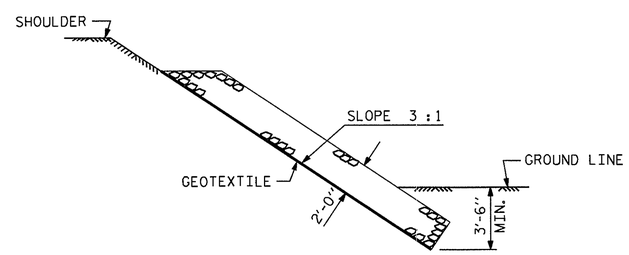


SECTION C-C

PROJECT NO. 17BP.2.R.19

LENOIR COUNTY

STATION: 14+27.50 -L-

STATE OF NORTH CAROLINA
DEPARTMENT OF TRANSPORTATION
RALEIGH

STANDARD

RIP RAP DETAILS

NORTH CAROLINA PROFESSIONAL SEAL 22005 ENGINEER A. KEITH PASCHAL
2-13-13

| REVISIONS | | | | | | SHEET NO. |
|---|---|---|---|---|---|---|
| NO. | BY: | DATE: | NO. | BY: | DATE: | S-16 |
| 1 | | | 3 | | | TOTAL SHEETS |
| 2 | | | 4 | | | 17 |

| | | | |
|---|---|---|---|
| ASSEMBLED BY : E. K. POPE | | DATE : | 2-1-13 |
| CHECKED BY : R. KOUCHEKI | | DATE : | 2-5-13 |
| DRAWN BY : REK 1/84 | REV. 5/1/06R | | TLA/GM |
| CHECKED BY : RDU 1/84 | REV. 10/1/11 | | MAA/GM |
| | REV. 12/21/11 | | MAA/GM |

13-FEB-2013 08:41
S:\DPG1\Keith\17BP.2.R.19\ekpope\17BP2R19_SD_CS.dgn
kpaschal

STD. NO. RR1 (Sht 3)

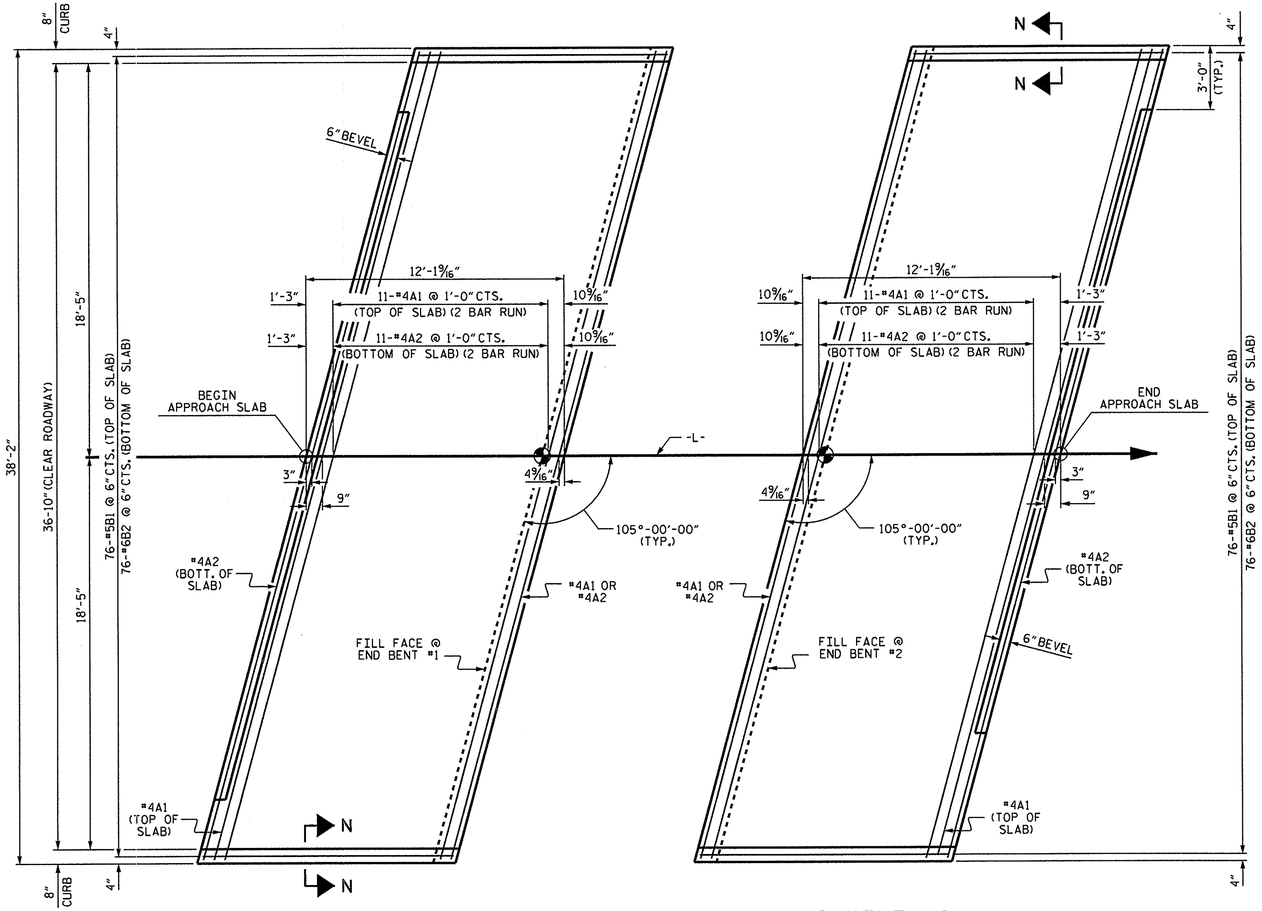


PLAN @ END BENT #1

PLAN @ END BENT #2

DIMENSIONS SHOWN ARE TYPICAL FOR BOTH APPROACH SLABS

## NOTES

FOR REINFORCED BRIDGE APPROACH FILL INCLUDING GEOTEXTILE, IMPERMEABLE GEOMEMBRANE, 4" Ø DRAINAGE PIPE, #78M STONE, AND SELECT MATERIAL, SEE ROADWAY PLANS.

AREA BETWEEN THE WINGWALL AND APPROACH SLAB SHALL BE GRADED TO DRAIN THE WATER AWAY FROM THE FILL FACE OF THE BRIDGE AND SHALL BE PAVED. SEE ROADWAY PLANS.

APPROACH SLAB GROOVING IS NOT REQUIRED.

## BILL OF MATERIAL

### APPROACH SLAB AT EB #1

| BAR | NO. | SIZE | TYPE | LENGTH | WEIGHT |
|---|---|---|---|---|---|
| * A1 | 26 | #4 | STR | 20'-8" | 359 |
| A2 | 26 | #4 | STR | 20'-6" | 356 |
| * B1 | 76 | #5 | STR | 11'-1" | 879 |
| B2 | 76 | #6 | STR | 11'-7" | 1322 |
| REINFORCING STEEL | | | | LBS. | 1678 |
| * EPOXY COATED REINFORCING STEEL | | | | LBS. | 1238 |
| CLASS AA CONCRETE | | | | C. Y. | 22.1 |

### APPROACH SLAB AT EB #2

| BAR | NO. | SIZE | TYPE | LENGTH | WEIGHT |
|---|---|---|---|---|---|
| * A1 | 26 | #4 | STR | 20'-8" | 359 |
| A2 | 26 | #4 | STR | 20'-6" | 356 |
| * B1 | 76 | #5 | STR | 11'-1" | 879 |
| B2 | 76 | #6 | STR | 11'-7" | 1322 |
| REINFORCING STEEL | | | | LBS. | 1678 |
| * EPOXY COATED REINFORCING STEEL | | | | LBS. | 1238 |
| CLASS AA CONCRETE | | | | C. Y. | 22.1 |

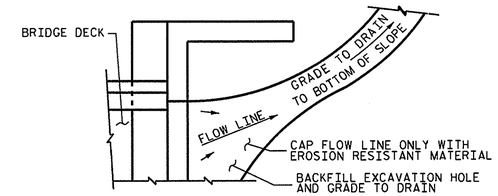


NOTE: IF THE APPROACH SLAB IS NOT CONSTRUCTED IMMEDIATELY AFTER THE BACKFILLING OF THE END BENT EXCAVATION, GRADE TO DRAIN TO THE BOTTOM OF THE SLOPE AND PROVIDE EROSION RESISTANT MATERIAL, SUCH AS FIBERGLASS ROVING OR AS DIRECTED BY THE ENGINEER TO PREVENT SOIL EROSION AND TO PROTECT THE AREA ADJACENT TO THE STRUCTURE. THE CONTRACTOR WILL BE REQUIRED TO REMOVE THESE MATERIALS PRIOR TO CONSTRUCTION OF THE APPROACH SLAB.

TEMPORARY DRAINAGE DETAIL

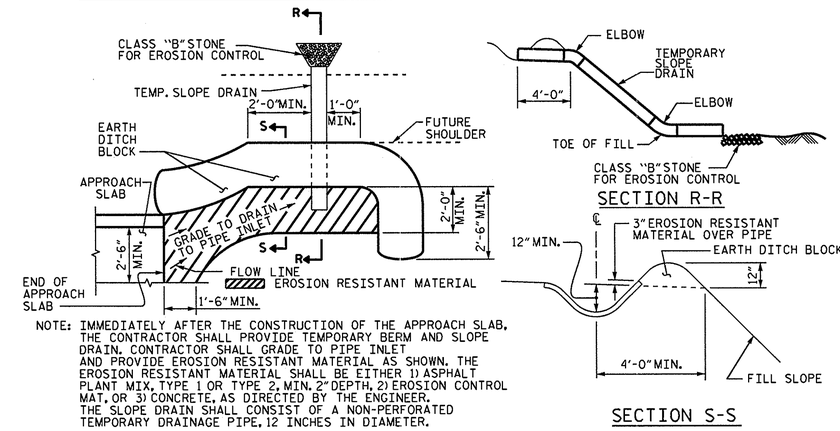


PLAN VIEW

SECTION R-R

SECTION S-S

NOTE: IMMEDIATELY AFTER THE CONSTRUCTION OF THE APPROACH SLAB, THE CONTRACTOR SHALL PROVIDE TEMPORARY BERM AND SLOPE DRAIN. CONTRACTOR SHALL GRADE TO PIPE INLET AND PROVIDE EROSION RESISTANT MATERIAL AS SHOWN. THE EROSION RESISTANT MATERIAL SHALL BE EITHER 1) ASPHALT PLANT MIX, TYPE 1 OR TYPE 2, MIN. 2" DEPTH, 2) EROSION CONTROL MAT, OR 3) CONCRETE, AS DIRECTED BY THE ENGINEER. THE SLOPE DRAIN SHALL CONSIST OF A NON-PERFORATED TEMPORARY DRAINAGE PIPE, 12 INCHES IN DIAMETER.

TEMPORARY BERM AND SLOPE DRAIN DETAILS

(TO BE USED WHEN SHOULDER BERM GUTTER IS REQUIRED)

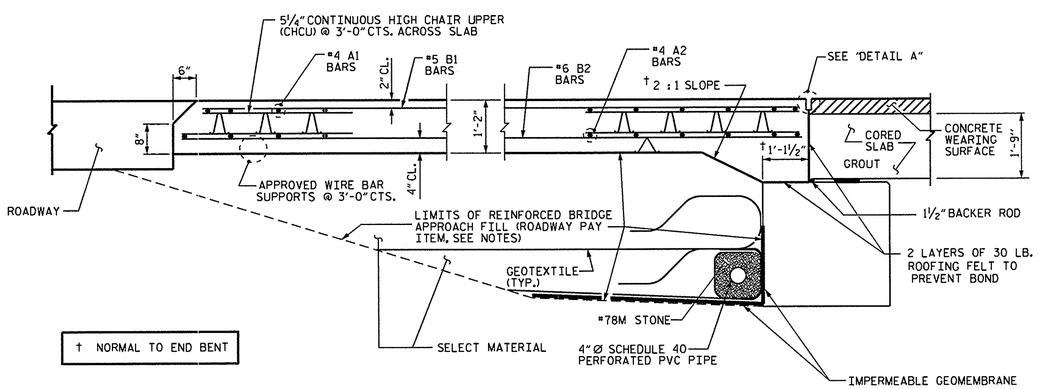


† NORMAL TO END BENT

SECTION THRU SLAB

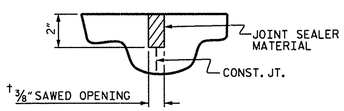


DETAIL A

| SPLICE LENGTHS | | |
|---|---|---|
| BAR SIZE | EPOXY COATED | UNCOATED |
| #4 | 2'-0" | 1'-9" |
| #5 | 2'-6" | 2'-2" |
| #6 | 3'-10" | 2'-7" |

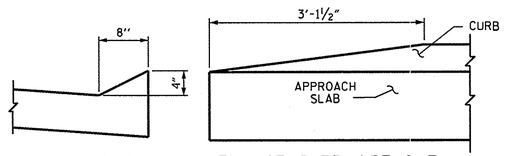


SECTION N-N

END OF CURB WITHOUT SHOULDER BERM GUTTER

CURB DETAILS

PROJECT NO. 17BP.2.R.19

LENOIR COUNTY

STATION: 14+27.50 -L-

STATE OF NORTH CAROLINA
DEPARTMENT OF TRANSPORTATION
RALEIGH

STANDARD
BRIDGE APPROACH SLAB
FOR PRESTRESSED CONCRETE
CORED SLAB UNIT

105° SKEW

NORTH CAROLINA PROFESSIONAL SEAL 22005 ENGINEER KEITH PASCHAL
2-13-13

| REVISIONS | | | | | | SHEET NO. |
|---|---|---|---|---|---|---|
| NO. | BY: | DATE: | NO. | BY: | DATE: | S-17 |
| 1 | | | 3 | | | TOTAL SHEETS |
| 2 | | | 4 | | | 17 |

| | | | |
|---|---|---|---|
| ASSEMBLED BY : | E. K. POPE | DATE : | 2-1-13 |
| CHECKED BY : | R. KOUCHEKI | DATE : | 2-5-13 |
| DRAWN BY : SHS/MAA 5-09 | REV. 12-11 | MAA/AAC | |
| CHECKED BY : BCH 5-09 | | | |

13-FEB-2013 08:41
S:\DPG\K0ith\17BP.2.R.19\ekpope\17BP2R19_SD_CS.dgn
kpaschal

STD. NO. BAS_39_105S

# STANDARD NOTES

## DESIGN DATA:

| | |
|---|---|
| SPECIFICATIONS | A.A.S.H.T.O. (CURRENT) |
| LIVE LOAD | SEE PLANS |
| IMPACT ALLOWANCE | SEE A.A.S.H.T.O. |
| STRESS IN EXTREME FIBER OF | |
| STRUCTURAL STEEL - AASHTO M270 GRADE 36 | 20,000 LBS. PER SQ. IN. |
| - AASHTO M270 GRADE 50W | 27,000 LBS. PER SQ. IN. |
| - AASHTO M270 GRADE 50 | 27,000 LBS. PER SQ. IN. |
| REINFORCING STEEL IN TENSION | |
| GRADE 60 | 24,000 LBS. PER SQ. IN. |
| CONCRETE IN COMPRESSION | 1,200 LBS. PER SQ. IN. |
| CONCRETE IN SHEAR | SEE A.A.S.H.T.O. |
| STRUCTURAL TIMBER - TREATED OR | |
| UNTREATED - EXTREME FIBER STRESS | 1,800 LBS. PER SQ. IN. |
| COMPRESSION PERPENDICULAR TO GRAIN OF TIMBER | 375 LBS. PER SQ. IN. |
| EQUIVALENT FLUID PRESSURE OF EARTH | 30 LBS. PER CU. FT. (MINIMUM) |

## MATERIAL AND WORKMANSHIP:

EXCEPT AS MAY OTHERWISE BE SPECIFIED ON PLANS OR IN THE SPECIAL PROVISIONS, ALL MATERIAL AND WORKMANSHIP SHALL BE IN ACCORDANCE WITH THE 2012 "STANDARD SPECIFICATIONS FOR ROADS AND STRUCTURES" OF THE N. C. DEPARTMENT OF TRANSPORTATION.

STEEL SHEET PILING FOR PERMANENT OR TEMPORARY APPLICATIONS SHALL BE HOT ROLLED.

## CONCRETE:

UNLESS OTHERWISE REQUIRED ON PLANS, CLASS A CONCRETE SHALL BE USED FOR ALL PORTIONS OF ALL STRUCTURES WITH THE EXCEPTION THAT: CLASS AA CONCRETE SHALL BE USED IN BRIDGE SUPERSTRUCTURES, ABUTMENT BACKWALLS, AND APPROACH SLABS; AND CLASS B CONCRETE SHALL BE USED FOR SLOPE PROTECTION AND RIP RAP.

## CONCRETE CHAMFERS:

UNLESS OTHERWISE NOTED ON THE PLANS, ALL EXPOSED CORNERS ON STRUCTURES SHALL BE CHAMFERED 3/4" WITH THE FOLLOWING EXCEPTIONS: TOP CORNERS OF CURBS MAY BE ROUNDED TO 1-1/2" RADIUS WHICH IS BUILT INTO CURB FORMS; CORNERS OF TRANSVERSE FLOOR EXPANSION JOINTS SHALL BE ROUNDED WITH A 1/4" FINISHING TOOL UNLESS OTHERWISE REQUIRED ON PLANS; AND CORNERS OF EXPANSION JOINTS IN THE ROADWAY FACES AND TOPS OF CURBS AND SIDEWALKS SHALL BE ROUNDED TO A 1/4" RADIUS WITH A FINISHING STONE OR TOOL UNLESS OTHERWISE REQUIRED ON PLANS.

## DOWELS:

DOWELS WHEN INDICATED ON PLANS AS FOR CULVERT EXTENSIONS, SHALL BE EMBEDDED AT LEAST 12" INTO THE OLD CONCRETE AND GROUTED INTO PLACE WITH 1:2 CEMENT MORTAR.

## ALLOWANCE FOR DEAD LOAD DEFLECTION, SETTLEMENT, ETC. IN CASTING SUPERSTRUCTURES:

BRIDGES SHALL BE BUILT ON THE GRADE OR VERTICAL CURVE SHOWN ON PLANS. SLABS, CURBS AND PARAPETS SHALL CONFORM TO THE GRADE OR CURVE.

ALL DIMENSIONS WHICH ARE GIVEN IN SECTION AND ARE AFFECTED BY DEAD LOAD DEFLECTIONS ARE DIMENSIONS AT CENTER LINE OF BEARING UNLESS OTHERWISE NOTED ON PLANS. IN SETTING FORMS FOR STEEL BEAM BRIDGES AND PRESTRESSED CONCRETE GIRDER BRIDGES, ADJUSTMENTS SHALL BE MADE DUE TO THE DEAD LOAD DEFLECTIONS FOR THE ELEVATIONS SHOWN. WHERE BLOCKS ARE SHOWN OVER BEAMS FOR BUILDING UP TO THE SLAB, THE VERTICAL DIMENSIONS OF THE BLOCKS SHALL BE ADJUSTED BETWEEN BEARINGS TO COMPENSATE FOR DEAD LOAD DEFLECTIONS, VERTICAL CURVE ORDINATE, AND ACTUAL BEAM CAMBER. WHERE BOTTOM OF SLAB IS IN LINE WITH BOTTOM OF TOP FLANGES, DEPTH OF SLAB BETWEEN BEARINGS SHALL BE ADJUSTED TO COMPENSATE FOR DEAD LOAD DEFLECTION, VERTICAL CURVE ORDINATE, AND ACTUAL BEAM CAMBER.

IN SETTING FALSEWORK AND FORMS FOR REINFORCED CONCRETE SPANS, AN ALLOWANCE SHALL BE MADE FOR DEAD LOAD DEFLECTIONS, SETTLEMENT OF FALSEWORK, AND PERMANENT CAMBER WHICH SHALL BE PROVIDED FOR IN ADDITION TO THE ELEVATIONS SHOWN. AFTER REMOVAL OF THE FALSEWORK, THE FINISHED STRUCTURES SHALL CONFORM TO THE PROFILE AND ELEVATIONS SHOWN ON THE PLANS AND CONSTRUCTION ELEVATIONS FURNISHED BY THE ENGINEER.

DETAILED DRAWINGS FOR FALSEWORK OR FORMS FOR BRIDGE SUPERSTRUCTURE AND ANY STRUCTURE OR PARTS OF A STRUCTURE AS NOTED ON THE PLANS SHALL BE SUBMITTED TO THE ENGINEER FOR APPROVAL BEFORE CONSTRUCTION OF THE FALSEWORK OR FORMS IS STARTED.

## REINFORCING STEEL:

ALL REINFORCING STEEL SHALL BE DEFORMED. DIMENSIONS RELATIVE TO PLACEMENT OF REINFORCING ARE TO CENTERS OF BARS UNLESS OTHERWISE INDICATED IN THE PLANS. DIMENSIONS ON BAR DETAILS ARE TO CENTERS OF BARS OR ARE OUT TO OUT AS INDICATED ON PLANS.

WIRE BAR SUPPORTS SHALL BE PROVIDED FOR REINFORCING STEEL WHERE INDICATED ON THE PLANS. WHEN BAR SUPPORT PIECES ARE PLACED IN CONTINUOUS LINES, THEY SHALL BE SO PLACED THAT THE ENDS OF THE SUPPORTING WIRES SHALL BE LAPPED TO LOCK LEGS ON ADJOINING PIECES.

## STRUCTURAL STEEL:

AT THE CONTRACTOR'S OPTION, HE MAY SUBSTITUTE 7/8" Ø SHEAR STUDS FOR THE 3/4" Ø STUDS SPECIFIED ON THE PLANS. THIS SUBSTITUTION SHALL BE MADE AT THE RATE OF 3 - 7/8" Ø STUDS FOR 4 - 3/4" Ø STUDS, AND STUD SPACING CHANGES SHALL BE MADE AS NECESSARY TO PROVIDE THE SAME EQUIVALENT NUMBER OF 7/8" Ø STUDS ALONG THE BEAM AS SHOWN FOR 3/4" Ø STUDS BASED ON THE RATIO OF 3 - 7/8" Ø STUDS FOR 4 - 3/4" Ø STUDS. STUDS OF THE LENGTH SPECIFIED ON THE PLANS MUST BE PROVIDED. THE MAXIMUM SPACING SHALL BE 2'-0".

EXCEPT AT THE INTERIOR SUPPORTS OF CONTINUOUS BEAMS WHERE THE COVER PLATE IS IN CONTACT WITH BEARING PLATE, THE CONTRACTOR MAY, AT HIS OPTION, SUBSTITUTE FOR THE COVER PLATES DESIGNATED ON THE PLANS COVER PLATES OF THE EQUIVALENT AREA PROVIDED THESE PLATES ARE AT LEAST 5/16" IN THICKNESS AND DO NOT EXCEED A WIDTH EQUAL TO THE FLANGE WIDTH LESS 2" OR A THICKNESS EQUAL TO 2 TIMES THE FLANGE THICKNESS. THE SIZE OF FILLET WELDS SHALL CONFORM TO THE REQUIREMENTS OF THE CURRENT ANSI/AASHTO/AWS "BRIDGE WELDING CODE". ELECTROSLAG WELDING WILL NOT BE PERMITTED.

WITH THE SOLE EXCEPTION OF EDGES AT SURFACES WHICH BEAR ON OTHER SURFACES, ALL SHARP EDGES AND ENDS OF SHAPES AND PLATES SHALL BE SLIGHTLY ROUNDED BY SUITABLE MEANS TO A RADIUS OF APPROXIMATELY 1/16 INCH OR EQUIVALENT FLAT SURFACE AT A SUITABLE ANGLE PRIOR TO PAINTING, GALVANIZING, OR METALLIZING.

## HANDRAILS AND POSTS:

METAL STANDARDS AND FACES OF THE CONCRETE END POSTS FOR THE METAL RAIL SHALL BE SET NORMAL TO THE GRADE OF THE CURB, UNLESS OTHERWISE SHOWN ON PLANS. THE METAL RAIL AND TOPS OF CONCRETE POSTS USED WITH THE ALUMINUM RAIL SHALL BE BUILT PARALLEL TO THE GRADE OF THE CURB.

METAL HANDRAILS SHALL BE IN ACCORDANCE WITH THE PLANS. RAILS SHALL BE AS MANUFACTURED FOR BRIDGE RAILING. CASTINGS SHALL BE OF A UNIFORM APPEARANCE. FINS AND OTHER DEFORMATIONS RESULTING FROM CASTING OR OTHERWISE SHALL BE REMOVED IN A MANNER SO THAT A UNIFORM COLORING OF THE COMPLETED CASTING SHALL BE OBTAINED. CASTINGS WITH DISCOLORATIONS OR OF NON-UNIFORM COLORING WILL NOT BE ACCEPTED. CERTIFIED MILL REPORTS ARE REQUIRED FOR METAL RAILS AND POSTS.

## SPECIAL NOTES:

GENERALLY, IN CASE OF DISCREPANCY, THIS STANDARD SHEET OF NOTES SHALL GOVERN OVER THE SPECIFICATIONS, BUT THE REMAINDER OF THE PLANS SHALL GOVERN OVER NOTES HEREON, AND SPECIAL PROVISIONS SHALL GOVERN OVER ALL. SEE SPECIFICATIONS ARTICLE 105-4.

ENGLISH

JANUARY, 1990

TIP PROJECT: 17BP.2.R.19

CONTRACT:

STATE OF NORTH CAROLINA
DIVISION OF HIGHWAYS

# LENOIR COUNTY

| STATE | STATE PROJECT REFERENCE NO. | SHEET NO. | TOTAL SHEETS |
|---|---|---|---|
| N.C. | 17BP.2.R.19 | UC-01 | 7 |

UTILITY DESIGN ENGINEER

NORTH CAROLINA PROFESSIONAL ENGINEER SEAL 036963 KEVIN C. ZOLES

2013-FEB-28

HNTB
HNTB NORTH CAROLINA, P.C.
343 E. Six Forks Road, Suite 200
Raleigh, North Carolina 27609
NC License No: C-1554

DATE: FEBRUARY 20, 2013

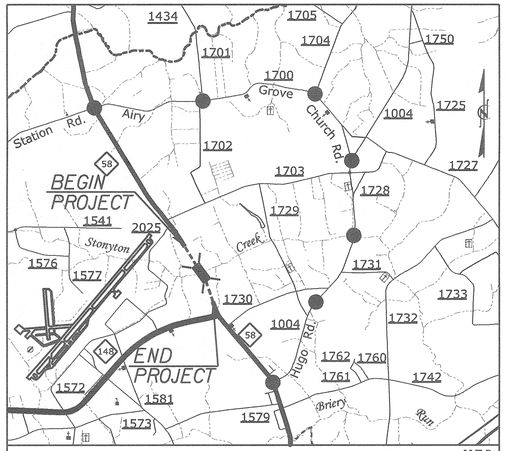


VICINITY MAP ●●● DETOUR ROUTE

## LOCATION: BRIDGE NO. 050 OVER STONEYTON CREEK ON N.C. 58

## TYPE OF WORK: UTILITIES CONSTRUCTION

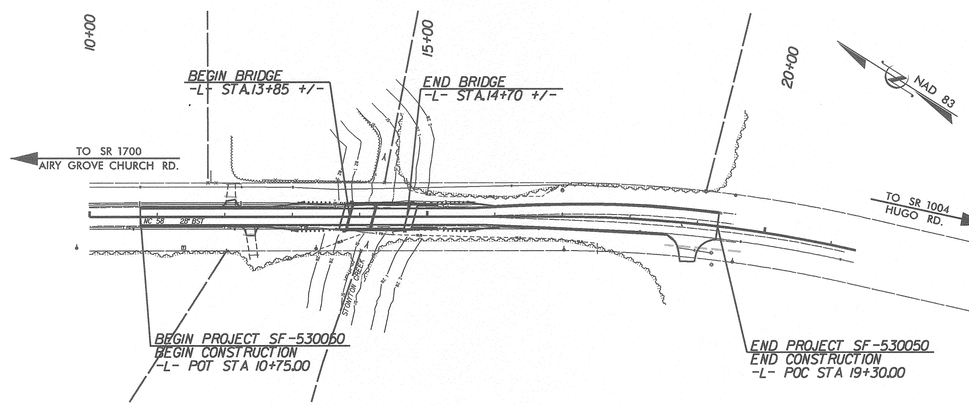


### GRAPHIC SCALES

50 25 0 50 100
PLANS

50 25 0 50 100
PROFILE (HORIZONTAL)

10 5 0 10 20
PROFILE (VERTICAL)

### PROJECT LENGTH

| | |
|---|---|
| LENGTH ROADWAY OF TIP PROJECT 17BP.1.R.6 = | 0.13 MI. |
| LENGTH OF STRUCTURE TIP PROJECT 17BP.1.R.6 = | 0.02 MI. |
| TOTAL LENGTH OF TIP PROJECT 17BP.1.R.6 = | 0.15 MI. |

### INDEX OF SHEETS


| SHEET NO. | DESCRIPTION |
|---|---|
| UC-01 | TITLE SHEET |
| UC-02 | SYMBOLOGY SHEET |
| UC-03 | GENERAL NOTES SHEET |
| UC-3A TO UC-3C | DETAIL SHEETS |
| UC-04 | PLAN SHEET |


### UTILITY OWNERS ON PROJECT

WATER - NORTH LENOIR WATER CORP.


UTILITY DESIGN BY:
MA Engineering CONSULTANTS, INC.
598 East Chatham Street, Suite 137 Cary, NC 27511
Phone: 919.297.0220 Fax. 919.297.0221


NCDOT PROJECT ENGINEER:
MARIA ROGERSON

PREPARED FOR:
NORTH CAROLINA
DEPARTMENT OF TRANSPORTATION
DIVISION 2 BRIDGE PROGRAM
GREENVILLE, NC


02/08/99
2/20/2013
R:\JOBS\0696\014\1700\Lenoir_BR-50\Utilities\Rdy_UT\Proj\530050_UC_UC-01_tsh.dgn
10:42:00 AM

| PROJECT REFERENCE NO. | SHEET NO. |
|---|---|
| 17BP.2.R.19 | UC-2 |

STATE OF NORTH CAROLINA
DIVISION OF HIGHWAYS

# UTILITIES PLAN SHEET SYMBOLS

## PROPOSED WATER SYMBOLS

- Water Line (Sized as Shown) — 12" WL
- 11¼ Degree Bend
- 22½ Degree Bend
- 45 Degree Bend
- 90 Degree Bend
- Plug
- Tee
- Cross
- Reducer
- Gate Valve — GV
- Butterfly Valve — BV
- Tapping Valve — TGV
- Line Stop — LS
- Line Stop with Bypass — LS/BP
- Blow Off — BO
- Fire Hydrant — PFH
- Relocate Fire Hydrant — RFH
- Remove Fire Hydrant — REM FH
- Water Meter — PWM
- Relocate Water Meter — RWM
- Remove Water Meter — REM WM
- Water Pump Station — PS(W)
- RPZ Backflow Preventer — PBPZ
- DCV Backflow Preventer — PBFP
- Relocate RPZ Backflow Preventer — RBPZ
- Relocate DCV Backflow Preventer — RBFP

## PROPOSED SEWER SYMBOLS

- Gravity Sewer Line (Sized as Shown) — 12" SS
- Force Main Sewer Line (Sized as Shown) — 12" FSS
- Manhole (Sized per Note)
- Sewer Pump Station — PS(SS)

## PROPOSED MISCELLANOUS UTILITIES SYMBOLS

- Power Pole
- Telephone Pole
- Joint Use Pole
- Telephone Pedestal — TEL PED
- Utility Line by Others (Type as Shown) — PROP O/H POW LINES
- Trenchless Installation — 12" TL INSTALL
- Encasement by Open Cut — 24" ENCAS BY OC
- Encasement — 24" ENCASEMENT
- Thrust Block
- Air Release Valve — AR
- Utility Vault — UV
- Concrete Pier — CP
- Steel Pier — SP
- Plan Note — NOTE
- Pay Item Note — PAY ITEM

## EXISTING UTILITIES SYMBOLS

- Power Pole
- Telephone Pole
- Joint Use Pole
- Utility Pole
- Utility Pole with Base
- H-Frame Pole
- Power Transmission Line Tower
- Water Manhole
- Power Manhole
- Telephone Manhole
- Sanitary Sewer Manhole
- Hand Hole for Cable
- Power Transformer
- Telephone Pedestal
- CATV Pedestal
- Gas Valve
- Gas Meter
- Located Miscellaneous Utility Object
- Abandoned According to Utility Records — AATUR
- End of Information — E.O.I.
- *Underground Power Line — P
- *Underground Telephone Cable — T
- *Underground Telephone Conduit — TC
- *Underground Fiber Optics Telephone Cable — T FO
- *Underground TV Cable — TV
- *Underground Fiber Optics TV Cable — TV FO
- *Underground Gas Pipeline — G
- Aboveground Gas Pipeline — A/G Gas
- *Underground Water Line — W
- Aboveground Water Line — A/G Water
- *Underground Gravity Sanitary Sewer Line — SS
- Aboveground Gravity Sanitary Sewer Line — A/G Sanitary Sewer
- *Underground SS Forced Main Line — FSS
- Underground Unknown Utility Line — ?UTL
- SUE Test Hole
- Water Meter
- Water Valve
- Fire Hydrant
- Sanitary Sewer Cleanout

*For Existing Utilities

- Utility Line Drawn from Record (Type as Shown) — W
- Designated Utility Line (Type as Shown) — W

REV: 2/1/2012

5/14/99

11700\Legend\Utilities\Rdg_Utl\Proj\5302050_UC_UC-02.sgmdgn
2/20/2013
10:24:25 AM

| PROJECT REFERENCE NO. | SHEET NO. |
|---|---|
| 17BP.2.R.19 | UC-3 |

UTILITY DESIGN ENGINEER

NORTH CAROLINA PROFESSIONAL SEAL ENGINEER KEVIN C. ZOEB

2013-FEB-28

MA Engineering CONSULTANTS, INC. 598 E. Chatham Street, Suite 137 Cary, N. C. 27511

HNTB HNTB NORTH CAROLINA, P.C. 343 E. Six Forks Road, Suite 200 Raleigh, North Carolina 27609 NC License No: C-1554

DATE: FEBRUARY 20, 2013

UTILITY OWNERS ON THIS PROJECT:

1. NORTH LENOIR WATER CORP.
UTILITY: 6" WATER LINE
CONTACT: MELVIN ALBRITTON
PHONE: (252) 560-1490

# UTILITY CONSTRUCTION

## GENERAL NOTES:

1. THE PROPOSED UTILITY CONSTRUCTION SHALL MEET THE APPLICABLE REQUIREMENTS OF THE NC DEPARTMENT OF TRANSPORTATION'S "STANDARD SPECIFICATIONS FOR ROADS AND STRUCTURES" DATED JANUARY 2012.

2. THE EXISTING UTILITIES BELONG TO NORTH LENOIR WATER CORP.

3. ALL WATER LINES TO BE INSTALLED WITHIN COMPLIANCE OF THE RULES AND REGULATIONS OF THE NORTH CAROLINA DEPARTMENT OF ENVIRONMENTAL AND NATURAL RESOURCES, DIVISION OF ENVIRONMENTAL HEALTH. ALL SEWER LINES TO BE INSTALLED WITHIN COMPLIANCE OF THE RULES AND REGULATIONS OF THE NORTH CAROLINA DEPARTMENT OF ENVIRONMENT AND NATURAL RESOURCES, DIVISION OF WATER QUALITY. PERFORM ALL WORK IN ACCORDANCE WITH THE APPLICABLE PLUMBING CODES.

4. THE UTILITY OWNER OWNS THE EXISTING UTILITY FACILITIES AND WILL OWN THE NEW UTILITY FACILITIES AFTER ACCEPTANCE BY THE DEPARTMENT. THE DEPARTMENT OWNS THE CONSTRUCTION CONTRACT AND HAS ADMINISTRATIVE AUTHORITY. COMMUNICATIONS AND DECISIONS BETWEEN THE CONTRACTOR AND UTILITY OWNER ARE NOT BINDING UPON THE DEPARTMENT OR THIS CONTRACT UNLESS AUTHORIZED BY THE ENGINEER. AGREEMENTS BETWEEN THE UTILITY OWNER AND CONTRACTOR FOR THE WORK THAT IS NOT PART OF THIS CONTRACT OR IS SECONDARY TO THIS CONTRACT ARE ALLOWED, BUT ARE NOT BINDING UPON THE DEPARTMENT.

5. PROVIDE ACCESS FOR THE DEPARTMENT PERSONNEL AND THE OWNER'S REPRESENTATIVES TO ALL PHASES OF CONSTRUCTION. NOTIFY DEPARTMENT PERSONNEL AND THE UTILITY OWNER TWO WEEKS PRIOR TO COMMENCEMENT OF ANY WORK AND ONE WEEK PRIOR TO SERVICE INTERRUPTION. KEEP UTILITY OWNERS' REPRESENTATIVES INFORMED OF WORK PROGRESS AND PROVIDE OPPROTUNITY FOR INSPECTION OF CONSTRUCTION AND TESTING.

6. THE PLANS DEPICT THE BEST AVAILABLE INFORMATION FOR THE LOCATION, SIZE, AND TYPE OF MATERIAL FOR ALL EXISTING UTILITIES. MAKE INVESTIGATIONS FOR DETERMINING THE EXACT LOCATION, SIZE, AND TYPE MATERIAL OF THE EXISTING FACILITIES AS NECESSARY FOR THE CONSTRUCTION OF THE PROPOSED UTILITIES AND FOR AVOIDING DAMAGE TO EXISTING FACILITIES. REPAIR ANY DAMAGE INCURRED TO EXISTING FACILITIES TO THE ORIGINAL OR BETTER CONDITION AT NO ADDITONAL COST TO THE DEPARTMENT.

7. MAKE FINAL CONNECTIONS OF THE NEW WORK TO THE EXISTING SYSTEM WHERE INDICATED ON THE PLANS, AS REQUIRED TO FIT THE ACTUAL CONDITIONS, OR AS DIRECTED.

8. MAKE CONNECTIONS BETWEEN EXISTING AND PROPOSED UTILITIES AT TIMES MOST CONVENIENT TO THE PUBLIC, WITHOUT ENDANGERING THE UTILITY SERVICE, AND IN ACCORDANCE WITH THE UTILITY OWNER'S REQUIREMENTS. MAKE CONNECTIONS ON WEEKENDS, AT NIGHT, AND ON HOLIDAYS IF NECESSARY.

9. ALL UTILITY MATERIALS SHALL BE APPROVED PRIOR TO DELIVERY TO THE PROJECT. SEE 1500-7, " SUBMITTALS AND RECORDS" IN SECTION 1500 OF THE STANDARD SPECIFICATIONS.

## PROJECT SPECIFIC NOTES:

1. PROPOSED WATER LINE SHALL BE DUCTILE IRON RESTRAINED JOINT (D.I.R.J.) PIPE.

2. ALL WATER LINE PIPE FOR TRENCHLESS CONSTRUCTION SHALL BE HDPE DR-9.

3. ALL WATER LINE, 4-INCHES THRU 18-INCHES IN DIAMETER, SHALL BE DUCTILE IRON.

4. ALL FITTINGS, VALVES, TEES, ETC SHALL BE SUPPORTED WITH #57 STONE.

5. ALL FITTINGS (BENDS, TEES, CROSSES, REDUCERS, PLUGS, ETC.) SHALL BE ADEQUATELY RESTRAINED BY USE OF RESTRAINT JOINT CONSTRUCTION USING ROMAC GRIP RINGS.

6. CONTRACTOR'S ATTENTION IS DIRECTED TO SECTIONS 102, 107, AND 1550 OF THE STANDARD SPECIFICATIONS CONCERNING TRENCHLESS INSTALLATION. IT IS CONTRACTOR'S RESPONSIBILITY TO HAVE BORE PATH DESIGNED AND SEALED BY A LICENSED NORTH CAROLINA PROFESSIONAL ENGINEER. NO DAMAGE IS ALLOWED TO RIVER, WETLANDS, OR BUFFER ZONES.

7. IF HDPE PIPE IS INSTALLED BY DIRECTIONAL DRILL. IT SHALL BE FILLED WITH WATER AND NOT BE CONNECTED TO ANY OTHER PIPE OR FITTINGS FOR 24 HOURS FROM THE TIME OF INSTALLATION.

8. PROPOSED WATER LINE SHALL BE TESTED AT 180 PSI.

9. THE EXISTING 6" LINE SHALL BE RESTRAINED ON THE PORTION TO REMAIN AFTER VALVE INSTALLATION. THE CONTRACTOR SHALL EXCAVATE THE EXISTING PVC LINE AND INSTALL THE BELL RESTRAINT CLAMPS AT EVERY BELL JOINT FOR THE DISTANCE NOTED IN THE DETAILS ON SHEET UC-3C.

10. PIPE TRANSITION FROM HDPE TO EXISTING PVC LINE SHALL BE MADE USING A MINIMUM OF 3 JOINTS OF DUCTILE IRON PIPE LAID HORIZONTALLY. SEE DETAIL ON SHEET UC-3B.

# PROJECT QUANTITIES

Job Name: 17BP.2.R.19 Date: 2/21/2013

| Item Number | Description | Quantity | |
|---|---|---|---|
| 5325600000-E | 6" WATER LINE | 136 | LF |
| 5325800000-E | 8" WATER LINE | 490 | LF |
| 5540000000-E | 6" VALVE | 4 | EA |
| 5606000000-E | 2" BLOW OFF | 1 | EA |
| 5800000000-E | ABANDON 6" UTILITY PIPE | 578 | LF |
| 5871500000-E | TRENCHLESS INSTALLATION OF 8" PIPE IN SOIL | 245 | LF |
| 5871510000-E | TRENCHLESS INSTALLATION OF 8" PIPE NOT IN SOIL | 245 | LF |

| PROJECT REFERENCE NO. | SHEET NO. |
|---|---|
| 17BP.2.R.19 | UC-3A |

UTILITY DESIGN ENGINEER

NORTH CAROLINA PROFESSIONAL SEAL 027361 ENGINEER KEVIN C. ZOBS

2013-FEB-28

MA Engineering CONSULTANTS, INC.
598 E. Chatham Street, Suite 137
Cary, N. C. 27511

HNTB
HNTB NORTH CAROLINA, P.C.
343 E. Six Forks Road, Suite 200
Raleigh, North Carolina 27609
NC License No: C-1554

DATE: FEBRUARY 20, 2013

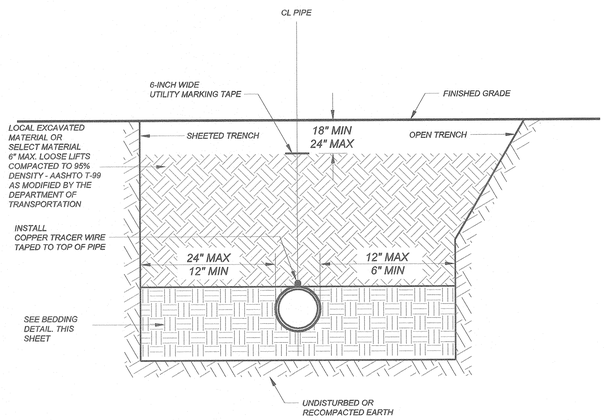


NOTES:
1. ALL SHORING & TRENCHING SHALL COMPLY WITH OSHA SAFETY STANDARDS FOR THE CONSTRUCTION INDUSTRY.
2. BELL HOLES NOT SHOWN.
3. ALL BACKFILL MATERIAL SHALL BE FREE OF ROCKS, FOREIGN MATERIAL, AND FROZEN EARTH.

## GENERAL TRENCH DETAIL
NTS

## PIPE BEDDING DETAIL

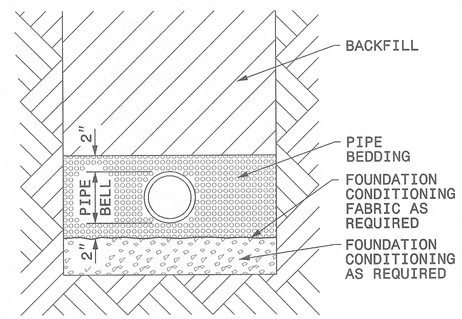


PLACE FOUNDATION CONDITIONING MATERIAL BELOW BEDDING IF REQUIRED, AS DIRECTED BY ENGINEER. PIPE BEDDED IN SELECT MATERIAL, CLASS II (TYPE 1) OR CLASS III. TRENCH BACKFILLED IN LOOSE 6" LAYERS COMPACTED TO TOP OF TRENCH USING LOCAL EXCAVATED MATERIAL IF APPROVED BY THE ENGINEER, OR SELECT MATERIAL. ALL MATERIAL SHALL BE FREE OF ROCKS, FOREIGN MATERIAL, AND FROZEN EARTH. COMPACTION SHALL BE TO APPROXIMATELY 95% DENSITY IN ACCORDANCE WITH AASHTO T-99 AS MODIFIED BY THE DEPARTMENT OF TRANSPORTATION.

MAXIMUM TRENCH WIDTH AT TOP OF PIPE

| NOMINAL PIPE SIZE (INCHES) | TRENCH WIDTH (INCHES) | NOMINAL PIPE SIZE (INCHES) | TRENCH WIDTH (INCHES) |
|---|---|---|---|
| 4 | 28 | 20 | 44 |
| 6 | 30 | 24 | 48 |
| 8 | 32 | 30 | 54 |
| 10 | 34 | 36 | 60 |
| 12 | 36 | 42 | 66 |
| 14 | 38 | 48 | 72 |
| 16 | 40 | 54 | 78 |
| 18 | 42 | | |

5/28/99
2/28/2013
P:\DGS\2098\014\1702\Lenoir_BR-50\Utilities\Rdy_Us\Proj\530050_UC_UC-03A_detail.dgn
10:26:18 AM

| PROJECT REFERENCE NO. | SHEET NO. |
|---|---|
| 17BP.2.R.19 | UC-3B |

UTILITY DESIGN ENGINEER

NORTH CAROLINA PROFESSIONAL SEAL 026819 ENGINEER KEVIN C. ZDEB

2013-FEB-28


MA Engineering CONSULTANTS, INC.
598 E. Chatham Street, Suite 137
Cary, N. C. 27511

HNTB
HNTB NORTH CAROLINA, P.C.
343 E. Six Forks Road, Suite 200
Raleigh, North Carolina 27609
NC License No: C-1554


DATE: FEBRUARY 20, 2013

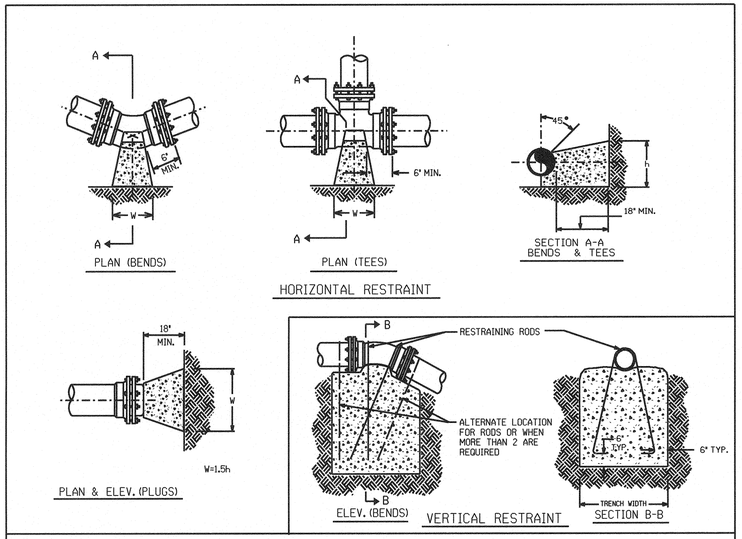


# THRUST RESTRAINT FOR PIPE LINES

## DUCTILE IRON PIPE RESTRAINED JOINT DESIGN TABLE

| FITTING | REQUIRED RESTRAINED LENGTH (FT) OF BARE D.I. PIPE BY DEPTH OF COVER | | | | | | | |
|---|---|---|---|---|---|---|---|---|
| **HORIZONTAL BENDS** | **3 FT** | **4 FT** | **5 FT** | **6 FT** | **7 FT** | **8 FT** | **9 FT** | **10 FT** |
| 6 INCH DIA - 11.25 DEG | 3 | 2 | 2 | 2 | 2 | 1 | 1 | 1 |
| 6 INCH DIA - 22.5 DEG | 5 | 4 | 4 | 3 | 3 | 3 | 3 | 2 |
| 6 INCH DIA - 45 DEG | 11 | 9 | 8 | 7 | 7 | 6 | 5 | 5 |
| 6 INCH DIA - 90 DEG | 26 | 22 | 19 | 17 | 16 | 14 | 13 | 12 |
| | | | | | | | | |
| 8 INCH DIA - 11.25 DEG | 3 | 3 | 2 | 2 | 2 | 2 | 2 | 2 |
| 8 INCH DIA - 22.5 DEG | 7 | 6 | 5 | 5 | 4 | 4 | 3 | 3 |
| 8 INCH DIA - 45 DEG | 14 | 12 | 10 | 9 | 8 | 8 | 7 | 7 |
| 8 INCH DIA - 90 DEG | 33 | 29 | 25 | 23 | 20 | 19 | 17 | 16 |
| | | | | | | | | |
| **VERTICAL DOWN BENDS** | **3 FT** | **4 FT** | **5 FT** | **6 FT** | **7 FT** | **8 FT** | **9 FT** | **10 FT** |
| 6 INCH DIA - 11.25 DEG | 7 | 6 | 6 | 5 | 4 | 4 | 4 | 3 |
| 6 INCH DIA - 22.5 DEG | 15 | 13 | 11 | 10 | 9 | 8 | 8 | 7 |
| 6 INCH DIA - 45 DEG | 31 | 27 | 23 | 21 | 19 | 17 | 16 | 15 |
| | | | | | | | | |
| 8 INCH DIA - 11.25 DEG | 10 | 8 | 7 | 6 | 6 | 5 | 5 | 5 |
| 8 INCH DIA - 22.5 DEG | 19 | 17 | 15 | 13 | 12 | 11 | 10 | 9 |
| 8 INCH DIA - 45 DEG | 40 | 35 | 30 | 27 | 25 | 22 | 21 | 19 |
| | | | | | | | | |
| **VERTICAL UP BENDS** | **3 FT** | **4 FT** | **5 FT** | **6 FT** | **7 FT** | **8 FT** | **9 FT** | **10 FT** |
| 6 INCH DIA - 11.25 DEG | 3 | 2 | 2 | 2 | 2 | 1 | 1 | 1 |
| 6 INCH DIA - 22.5 DEG | 5 | 4 | 4 | 3 | 3 | 3 | 3 | 2 |
| 6 INCH DIA - 45 DEG | 11 | 9 | 8 | 7 | 7 | 6 | 5 | 5 |
| | | | | | | | | |
| 8 INCH DIA - 11.25 DEG | 3 | 3 | 2 | 2 | 2 | 2 | 2 | 2 |
| 8 INCH DIA - 22.5 DEG | 7 | 6 | 5 | 5 | 4 | 4 | 3 | 3 |
| 8 INCH DIA - 45 DEG | 14 | 12 | 10 | 9 | 8 | 8 | 7 | 7 |
| | | | | | | | | |
| **DEAD ENDS / VALVES** | **3 FT** | **4 FT** | **5 FT** | **6 FT** | **7 FT** | **8 FT** | **9 FT** | **10 FT** |
| 6 INCH DIA | 50 | 45 | 41 | 38 | 35 | 33 | 31 | 29 |
| 8 INCH DIA | 65 | 59 | 54 | 50 | 46 | 43 | 40 | 38 |
| | | | | | | | | |
| **REDUCERS** | **3 FT** | **4 FT** | **5 FT** | **6 FT** | **7 FT** | **8 FT** | **9 FT** | **10 FT** |
| 8 INCH X 6 INCH | 27 | 25 | 23 | 21 | 19 | 18 | 17 | 16 |

**ASSUMPTIONS**

LAYING CONDITION = TYPE 4
SOIL DESIGNATION = GC = COHESIVE-GRANULAR
DESIGN PRESSURE = 200 PSI (TEST PRESSURE)
SAFETY FACTOR = 1.5

**NOTES**

1. RESTRAINED LENGTH IS MEASURED FROM THE CENTER OF THE BEND AS FOLLOWS:
   A. HORIZONTAL AND VERTICAL BENDS: ALONG EACH SIDE OF BEND.
   B. HORIZONTAL AND VERTICAL BENDS - OFFSET OR COMBINED: ALONG THE OUTER SIDE OF EACH BEND.
   ALL PIPE BETWEEN THE TWO BENDS SHALL BE RESTRAINED JOINT WHEN THE DISTANCE BETWEEN THEM IS EQUAL TO OR LESS THAN THE REQUIRED RESTRAINED LENGTH. WHEN THE DISTANCE BETWEEN BENDS IS LESS THAN REQUIRED, THE BALANCE OF THE REQUIRED RESTRAINED LENGTH SHALL BE ADDED ON TO THE LENGTH ALONG THE OUTSIDE OF EACH BEND RESPECTIVELY TO MAKE UP FOR THE DEFICIENCY IN THAT DIRECTION.
   **HORIZONTAL BEND EXAMPLE...**
   INSTALL A 8 INCH 45 DEG BEND AND A 22.5 DEG BEND WITH 10 FEET BETWEEN BENDS AND 4 FEET OF COVER. THE CONTRACTOR SHALL PROVIDE AN ADDITIONAL 1 FOOT OF RESTRAINED LENGTH BEYOND THE 45 DEGREE BEND (FOR A TOTAL OF 13 FEET) AND AN ADDITIONAL 7 FEET OF RESTRAINED LENGTH BEYOND THE 22.5 DEGREE BEND (FOR A TOTAL OF 13 FEET).
2. WHEN IT IS NOT POSSIBLE TO INSTALL THE RESTRAINED LENGTHS AS NOTED BY THIS TABLE, THE CONTRACTOR SHALL INSTALL THE APPROPRIATE CONCRETE THRUST RESTRAINTS AS PER THE DETAILS HEREIN.

## BASED ON TEST PRESSURE OF 200 P.S.I.

### HORIZONTAL RESTRAINT
(ALL AREAS GIVEN ARE IN SQUARE FEET)

| PIPE SIZE | DEGREE OF BEND | LBS. STATIC THRUST * | ALLOWABLE SOIL BEARING (PSF) 1000 | 2000 | 3000 | 4000 | 5000 | 6000 | 7000 | 8000 |
|---|---|---|---|---|---|---|---|---|---|---|
| 4" | 11 1/4° | 616 | 1 | 1 | 1 | 1 | 1 | 1 | 1 | 1 |
| | 22 1/2° | 1,225 | 1 | 1 | 1 | 1 | 1 | 1 | 1 | 1 |
| | 45° | 2,405 | 2 | 2 | 1 | 1 | 1 | 1 | 1 | 1 |
| | 90° | 4,444 | 4 | 2 | 1 | 1 | 1 | 1 | 1 | 1 |
| | TEE/PLUG | 3,141 | 3 | 2 | 1 | 1 | 1 | 1 | 1 | 1 |
| 6" | 11 1/4° | 1,385 | 2 | 1 | 1 | 1 | 1 | 1 | 1 | 1 |
| | 22 1/2° | 2,758 | 3 | 2 | 1 | 1 | 1 | 1 | 1 | 1 |
| | 45° | 5,409 | 5 | 3 | 2 | 2 | 1 | 1 | 1 | 1 |
| | 90° | 9,999 | 10 | 5 | 3 | 3 | 2 | 2 | 2 | 1 |
| | TEE/PLUG | 7,068 | 7 | 4 | 3 | 2 | 2 | 1 | 1 | 1 |
| 8" | 11 1/4° | 2,462 | 3 | 1 | 1 | 1 | 1 | 1 | 1 | 1 |
| | 22 1/2° | 4,904 | 5 | 3 | 2 | 1 | 1 | 1 | 1 | 1 |
| | 45° | 9,619 | 10 | 5 | 3 | 2 | 2 | 2 | 2 | 1 |
| | 90° | 17,773 | 18 | 9 | 6 | 4 | 4 | 3 | 3 | 2 |
| | TEE/PLUG | 12,568 | 13 | 6 | 4 | 3 | 3 | 2 | 2 | 2 |
| 10" | 11 1/4° | 3,846 | 4 | 2 | 2 | 1 | 1 | 1 | 1 | 1 |
| | 22 1/2° | 7,661 | 8 | 4 | 3 | 2 | 2 | 2 | 1 | 1 |
| | 45° | 15,028 | 15 | 8 | 5 | 4 | 3 | 3 | 2 | 2 |
| | 90° | 27,768 | 28 | 14 | 9 | 7 | 6 | 5 | 4 | 3 |
| | TEE/PLUG | 19,635 | 20 | 10 | 7 | 5 | 4 | 3 | 3 | 2 |
| 12" | 11 1/4° | 5,543 | 6 | 3 | 2 | 2 | 1 | 1 | 1 | 1 |
| | 22 1/2° | 11,032 | 11 | 6 | 4 | 3 | 2 | 2 | 2 | 2 |
| | 45° | 21,641 | 22 | 11 | 7 | 5 | 4 | 4 | 3 | 3 |
| | 90° | 39,987 | 40 | 20 | 13 | 10 | 8 | 7 | 6 | 5 |
| | TEE/PLUG | 28,274 | 28 | 14 | 9 | 7 | 6 | 5 | 4 | 4 |
| 14" | 11 1/4° | 7,544 | 8 | 4 | 3 | 2 | 2 | 2 | 1 | 1 |
| | 22 1/2° | 15,016 | 15 | 8 | 5 | 4 | 3 | 3 | 2 | 2 |
| | 45° | 29,455 | 29 | 15 | 10 | 7 | 6 | 5 | 4 | 4 |
| | 90° | 54,426 | 54 | 27 | 18 | 14 | 11 | 9 | 8 | 7 |
| | TEE/PLUG | 38,485 | 38 | 19 | 13 | 10 | 8 | 6 | 5 | 5 |
| 16" | 11 1/4° | 9,854 | 10 | 5 | 3 | 3 | 2 | 2 | 2 | 2 |
| | 22 1/2° | 19,612 | 20 | 10 | 7 | 5 | 4 | 3 | 3 | 3 |
| | 45° | 38,471 | 38 | 19 | 13 | 10 | 8 | 6 | 5 | 5 |
| | 90° | 71,085 | 71 | 36 | 24 | 18 | 14 | 12 | 10 | 9 |
| | TEE/PLUG | 50,265 | 50 | 25 | 17 | 13 | 10 | 8 | 7 | 6 |

* INCLUDES 1.25 SAFETY FACTOR

### VERTICAL RESTRAINT
(ALL VOLUMES GIVEN ARE IN CUBIC YARDS)**

| PIPE SIZE | RESTRAINING RODS NO.REQ'D | DIA. | DEGREE OF BEND 11 1/4° | 22 1/2° | 45° |
|---|---|---|---|---|---|
| 4" | 2 | 1/2" | 0.25 | 0.50 | 0.75 |
| 6" | 2 | 1/2" | 0.50 | 1.0 | 1.75 |
| 8" | 2 | 5/8" | 0.75 | 1.50 | 3.0 |
| 10" | 2 | 3/4" | 1.25 | 2.25 | 4.50 |
| 12" | 2 | 7/8" | 1.75 | 3.25 | 6.50 |
| 14" | 4 | 5/8" | 2.25 | 4.50 | 8.75 |
| 16" | 4 | 3/4" | 3.0 | 6.0 | 11.50 |

**INCLUDES 1.50 SAFETY FACTOR

GENERAL NOTES:
1. CONCRETE SHALL BE CLASS "B".
2. CONCRETE SHALL NOT CONTACT BOLTS ENDS OF MECHANICAL JOINT FITTINGS.
3. CONSULT WITH ENGINEER FOR CONCRETE REQUIREMENTS ON MAINS LARGER THAN 16 INCHES. (FOR VERTICAL & HORIZONTAL BENDS)
4. ALLOWABLE SOIL BEARING SHALL BE DETERMINED BY THE ENGINEER.

| REVISIONS | | |
|---|---|---|
| NO. | DATE | DESCRIPTION |
| | | |
| | | |
| | | |

SHEET 2 OF 2

# THRUST RESTRAINT FOR WATER MAINS

STATE OF NORTH CAROLINA
DIVISION OF HIGHWAYS
RALEIGH, N.C.

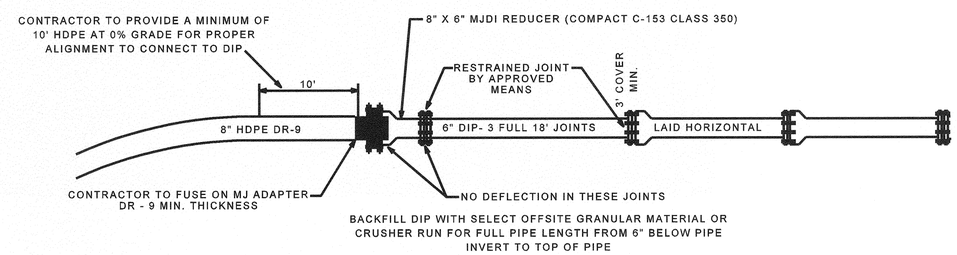


# 8" HDPE X 6" DIP TRANSITION

NOT TO SCALE


5/28/99
2/20/2013
F:\USERS\DGS96\014\11700\Lenoir_BR-50\Utilities\Rdy_Ut\Proj\530050_UC_UC-03B_detail2.dgn

| PROJECT REFERENCE NO. | SHEET NO. |
|---|---|
| 17BP.2.R.19 | UC-3C |

UTILITY DESIGN ENGINEER

NORTH CAROLINA PROFESSIONAL SEAL 22861 ENGINEER KEVIN C. ZUBE

2013-FEB-28

MA Engineering CONSULTANTS, INC. — 598 E. Chatham Street, Suite 137, Cary, N. C. 27511

HNTB — HNTB NORTH CAROLINA, P.C. 343 E. Six Forks Road, Suite 200 Raleigh, North Carolina 27609 NC License No: C-1554

DATE: FEBRUARY 20, 2013

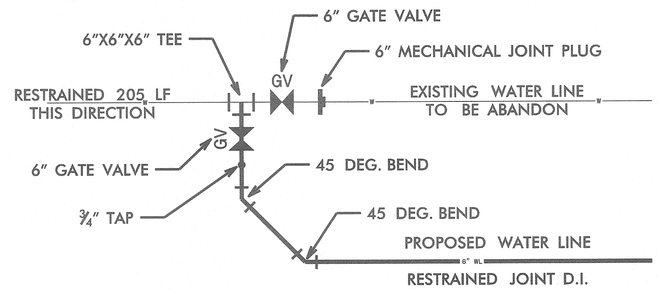


NOTES:

1. MAINTAIN A MINIMUM 18" BETWEEN VALVES AND FITTINGS
2. EXISTING WATERLINE TO BE RESETRAINED ON THE PORTION TO REMAIN AFTER INSTALLATION OF TEE FITTING AND VALVES.
3. PLUG FITTING TO BE INSTALLED AFTER PROPOSED WATER LINE IS PUT INTO SERVICE.

## TIE-IN DETAIL A
NTS

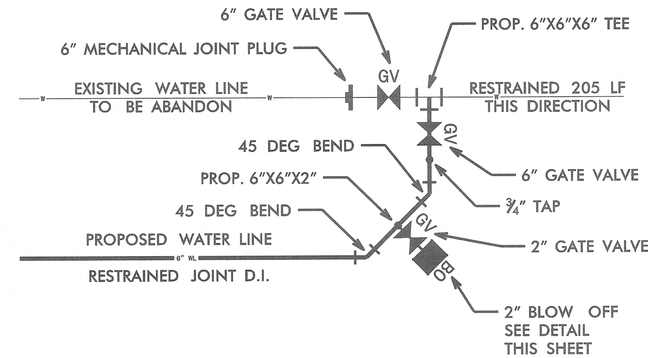


NOTES:

1. MAINTAIN A MINIMUM 18" BETWEEN VALVES AND FITTINGS
2. EXISTING WATERLINE TO BE RESETRAINED ON PORTION TO REMAIN AFTER INSTALLATION OF TEE FITTING AND VALVES.
3. PLUG FITTING TO BE INSTALLED AFTER PROPOSED WATER LINE IS PUT INTO SERVICE.

## TIE-IN DETAIL B
NTS

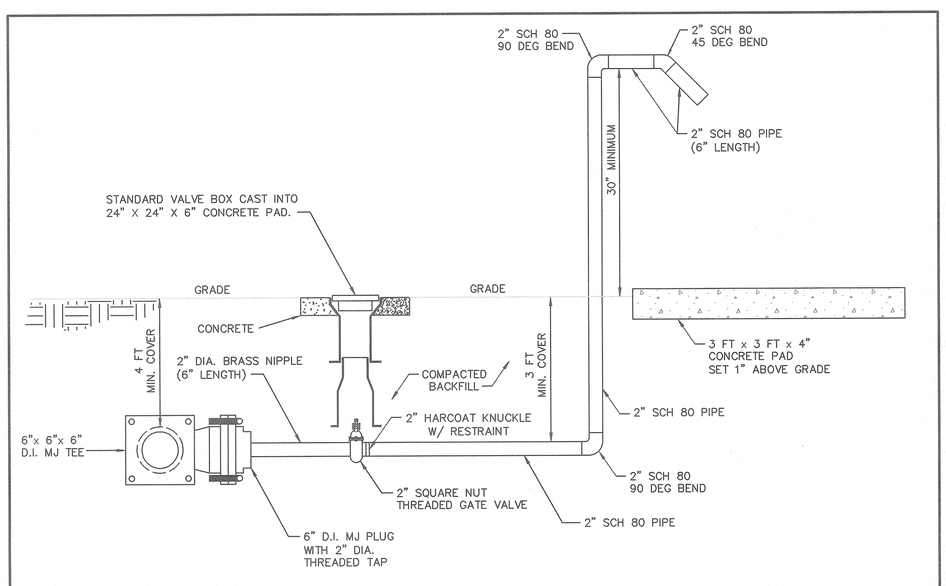


## 2" BLOW-OFF ASSEMBLY

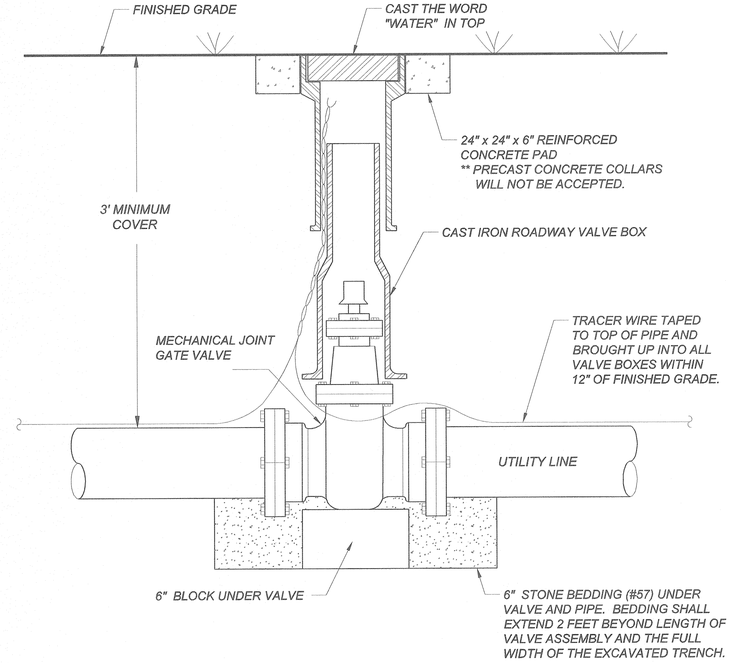


## GATE VALVE DETAIL
NTS

5/28/99
3/1/2013 8:34:53 AM
P:\0696\014\11700\Lenoir_BR-50\Utilities\Rdy_Ut\Proj\530050_UC_UC-03C_detail3.dgn

| PROJECT REFERENCE NO. | SHEET NO. |
|---|---|
| 17BP.2.R.19 | UC-04 |

UTILITY DESIGN ENGINEER

NORTH CAROLINA PROFESSIONAL SEAL ENGINEER KEVIN C. ZDEB

2013-FEB-28

MA Engineering CONSULTANTS, INC. 598 E. Chatham Street, Suite 137 Cary, N. C. 27511

HNTB HNTB NORTH CAROLINA, P.C. 343 E. Six Forks Road, Suite 200 Raleigh, North Carolina 27609 NC License No: C-1554

DATE: FEBRUARY 20, 2013

UTILITY OWNERS ON THIS PROJECT:

1. NORTH LENOIR WATER CORP.
UTILITY: 6" WATER LINE
CONTACT: MELVIN ALBRITTON
PHONE: (252) 560-1490

NOTES:

1. INSTALL WATER LINE WITH 3 FEET MINIMUM COVER TO FINAL GRADE.
2. PIPE FOR TRENCHLESS INSTALLATION SHALL BE 8" HDPE DR-9.
3. ALL PIPE FOR OPEN TRENCH CONSTRUCTION SHALL BE 6" RESTRAINED JOINT DUCTILE IRON.
4. THE EXISTING 6" LINE SHALL BE RESTRAINED ON THE PORTION TO REMAIN AFTER VALVE INSTALLATION. THE CONTRACTOR SHALL EXCAVATE THE EXISTING PVC LINE AND INSTALL THE BELL RESTRAINT CLAMPS AT EVERY BELL JOINT FOR THE DISTANCE NOTED IN THE TIE-IN DETAILS ON SHEET UC-3C.

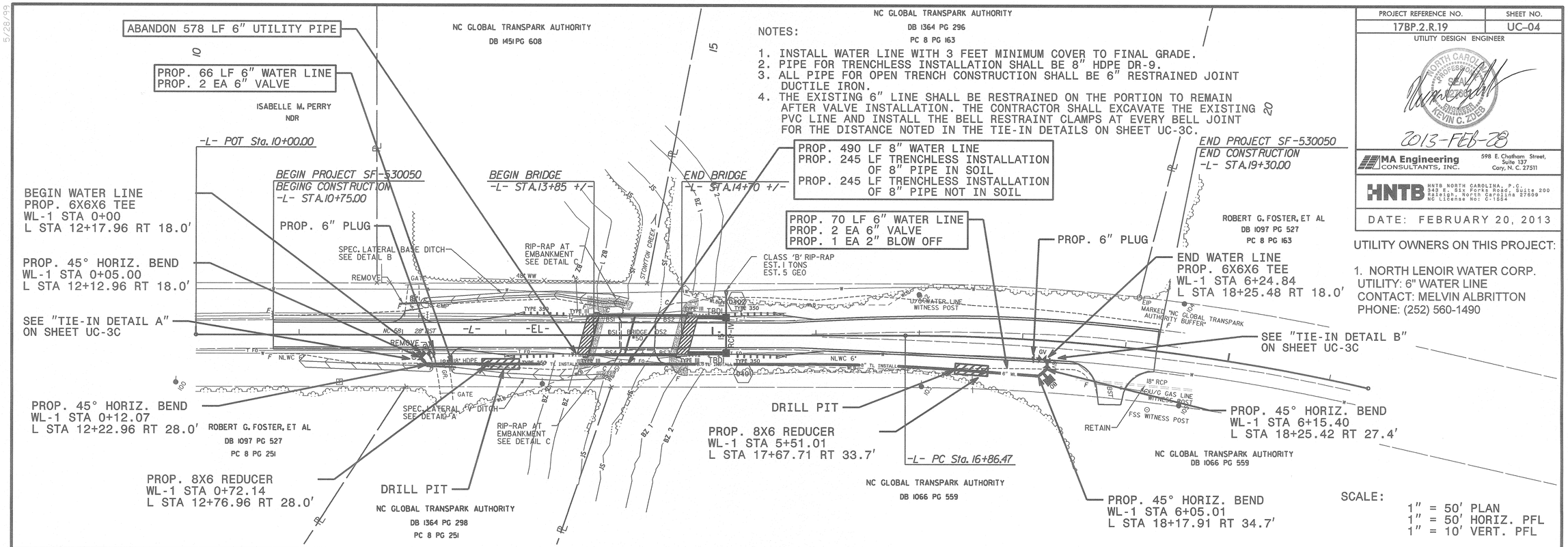


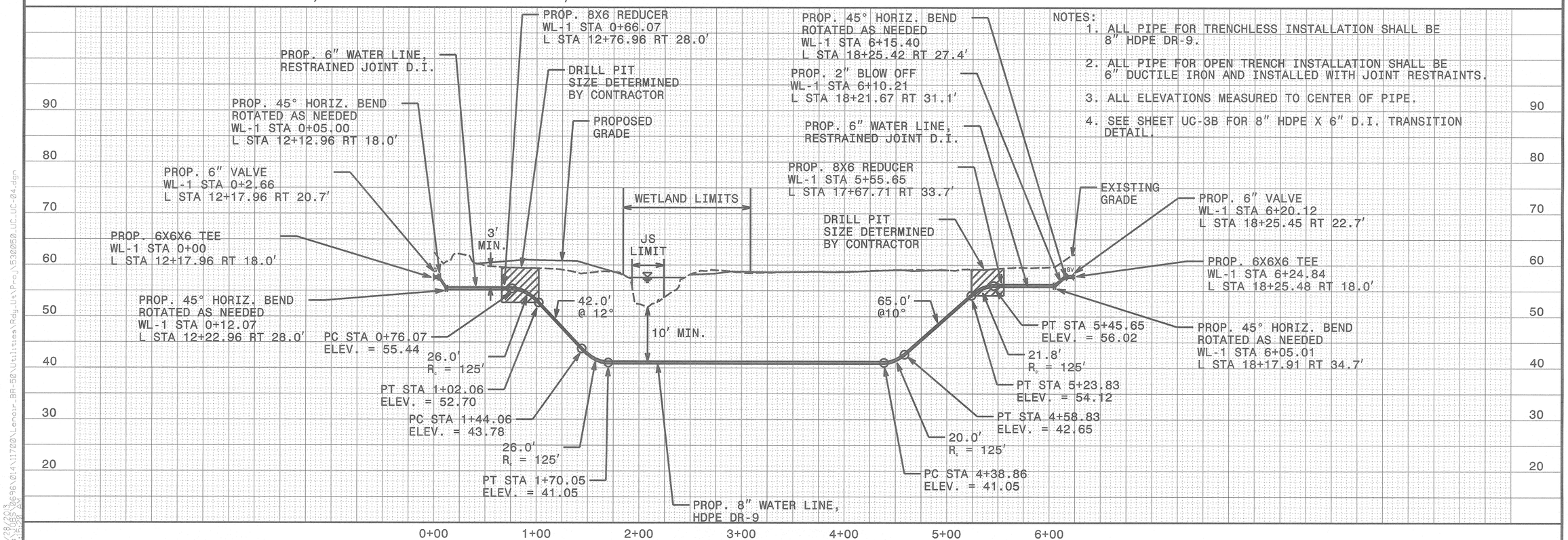


NOTES:

1. ALL PIPE FOR TRENCHLESS INSTALLATION SHALL BE 8" HDPE DR-9.
2. ALL PIPE FOR OPEN TRENCH INSTALLATION SHALL BE 6" DUCTILE IRON AND INSTALLED WITH JOINT RESTRAINTS.
3. ALL ELEVATIONS MEASURED TO CENTER OF PIPE.
4. SEE SHEET UC-3B FOR 8" HDPE X 6" D.I. TRANSITION DETAIL.

5/28/99

2/28/2013 8:28:20 AM
P:\0696\014\17BP\Lenoir_BR-50\Utilities\Rdy_Utl_Proj\530050_UC_UC-04.dgn

| STATE | STATE PROJECT REFERENCE NO. | SHEET NO. | TOTAL SHEETS |
|---|---|---|---|
| N.C. | 17BP.2.R.19 | UO-01 | 2 |

# STATE OF NORTH CAROLINA
# DIVISION OF HIGHWAYS

# *LENOIR COUNTY*

***LOCATION: BRIDGE NO. 050 OVER STONEYTON CREEK ON N.C. 58***

***TYPE OF WORK: UTILITIES BY OTHERS***

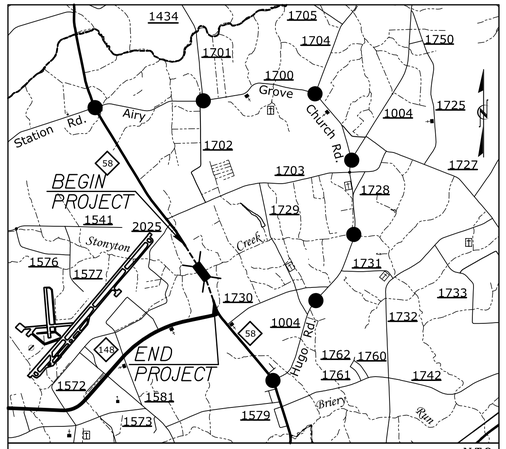


N.T.S.

***VICINITY MAP*** ●●● ***DETOUR ROUTE***

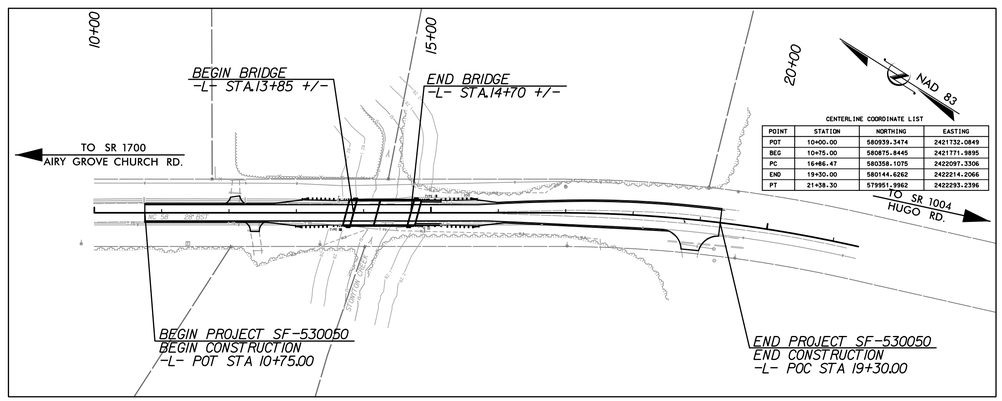


CENTERLINE COORDINATE LIST

| POINT | STATION | NORTHING | EASTING |
|---|---|---|---|
| POT | 10+00.00 | 580939.3474 | 2421732.0849 |
| BEG | 10+75.00 | 580875.8445 | 2421771.9895 |
| PC | 16+86.47 | 580358.1075 | 2422097.3306 |
| END | 19+30.00 | 580144.6262 | 2422214.2066 |
| PT | 21+38.30 | 579951.9962 | 2422293.2396 |

***GRAPHIC SCALES***

30 15 0 50 60
PLANS

30 15 0 50 60
PROFILE (HORIZONTAL)

10 5 0 10 20
PROFILE (VERTICAL)

***PROJECT LENGTH***

| | |
|---|---|
| *LENGTH ROADWAY OF TIP PROJECT 17BP.1.R.6 =* | *0.13 MI.* |
| *LENGTH OF STRUCTURE TIP PROJECT 17BP.1.R.6 =* | *0.02 MI.* |
| *TOTAL LENGTH OF TIP PROJECT 17BP.1.R.6 =* | *0.15 MI.* |

***INDEX OF SHEETS***


| *SHEET NO.* | *DESCRIPTION* |
|---|---|
| *UC–01* | *TITLE SHEET* |
| *UC–02* | *PLAN SHEET* |


***UTILITY OWNERS ON PROJECT***

***PHONE – CENTURYLINK***

UTILITY DESIGN BY:


**MA Engineering** CONSULTANTS, INC.
598 East Chatham Street, Suite 137 Cary, NC 27511
Phone: 919.297.0220 Fax. 919.297.0221


***NCDOT PROJECT ENGINEER:***
***MARIA ROGERSON***
***PREPARED FOR:***
***NORTH CAROLINA***
***DEPARTMENT OF TRANSPORTATION***
***DIVISION 2 BRIDGE PROGRAM***
***GREENVILLE, NC***

***TIP PROJECT: 17BP.2.R.19***

***CONTRACT:***

09/08/99
10:17:16 AM
:\Proj\530050_UO_UO-01_tsh.dgn
$$$$USERNAME$$$$

| PROJECT REFERENCE NO. | SHEET NO. |
|---|---|
| 17BP.2.R.19 | UO-01 |

# UTILITIES BY OTHERS

NOTE:
ALL PROPOSED UTILITY WORK SHOWN ON THIS SHEET WILL BE DONE BY OTHERS

MA Engineering CONSULTANTS, INC.
598 E. Chatham Street, Suite 137
Cary, N. C. 27511

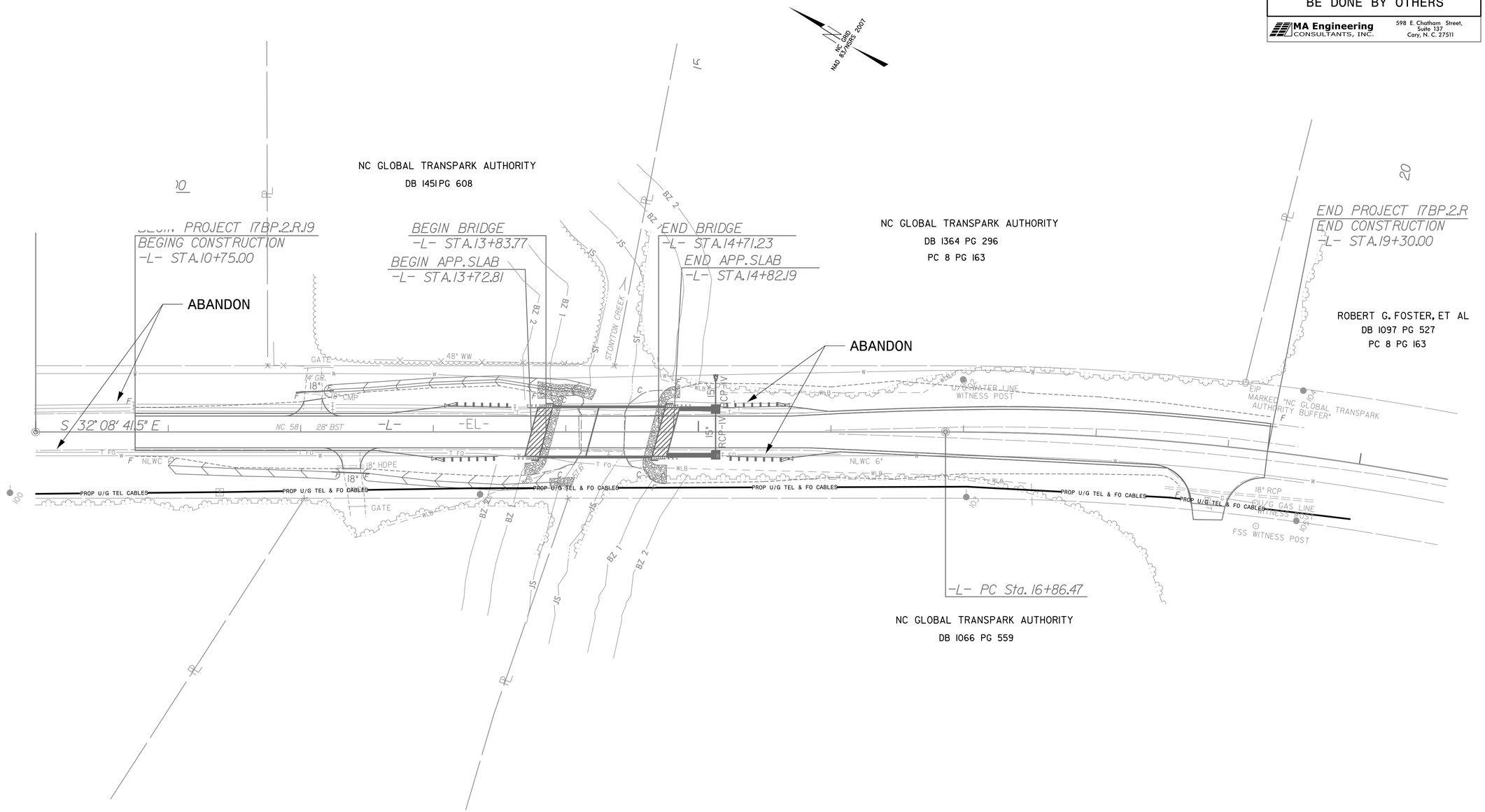


5/14/99

10:50:17 AM
$$$$$\REPROJF$$$$$