PROJECT REFERENCE NO.	SHEET NO.
W-5202K	1C

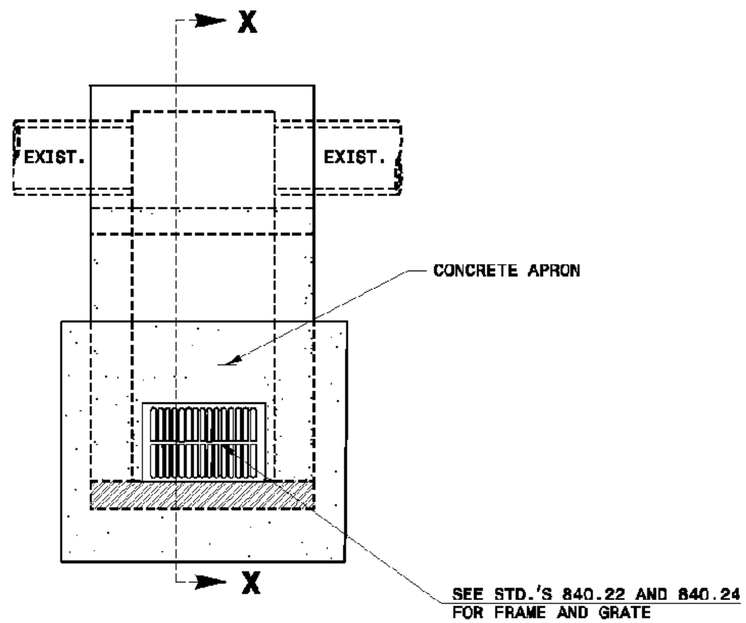

PLAN

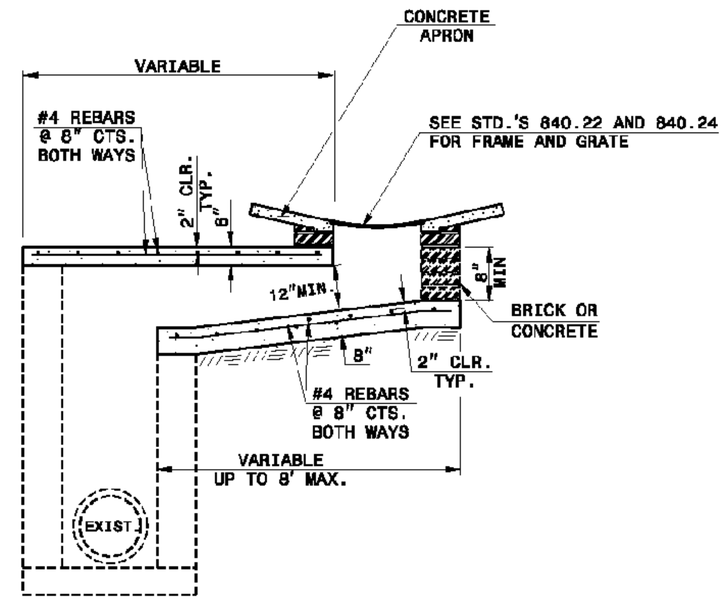

SECTION X-X

NOTES:

MORTAR JOINTS ½" TO ¼" THICK.

USE CLASS "B" CONCRETE THROUGHOUT.

USE BRICK OR CONCRETE BLOCK WHICH COMPLIES WITH THE REQUIREMENTS OF SECTION 840 OF THE STANDARD SPECIFICATIONS.

CHAMFER ALL EXPOSED CORNERS 1".

DRAWING NOT TO SCALE.

CONTRACT STANDARDS
AND DEVELOPMENT UNIT
Office 919-707-6950 FAX 919-250-4119

PROPOSED
OFFSET DROP INLET

ORIGINAL BY: DATE:
MODIFIED BY: rnbritt DATE: 4/13/15
CHECKED BY: DATE:
FILE SPEC.: nbritt/english/hydro/840d06 offset boxes.dgn

REVISIONS

8/17/99

05-JUN-2015 08:27
s:\contracts\roadway\NC 11 Median Turn Lanes\W5202K_pshlc.dgn
$$$$USERNAME$$$$