10/26/98

| Project Reference No. | Sheet No. |
|---|---|
| 49017 | 1 OF 5 |

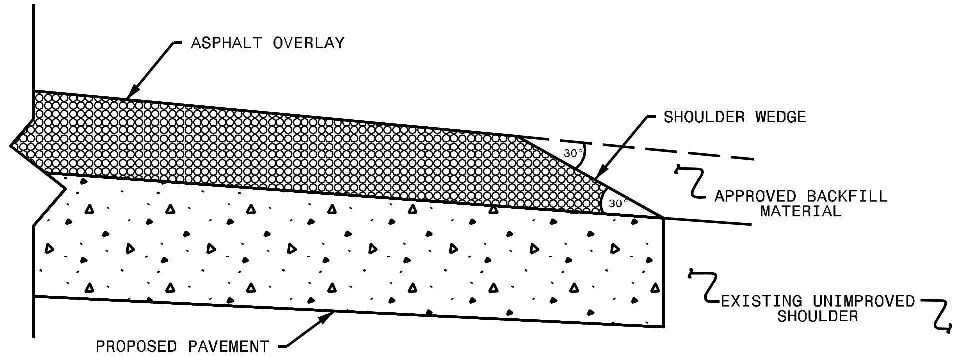


SHOULDER WEDGE DETAIL

(Resurfacing Projects w/ Widening or with Existing Paved Shoulder having no dropoffs)

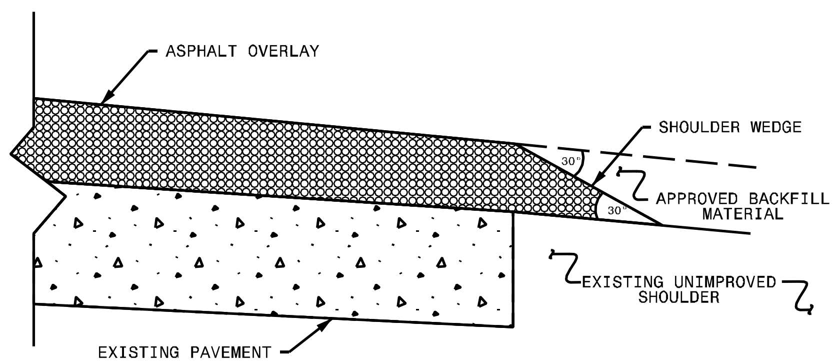


SHOULDER WEDGE DETAIL

(Resurfacing Projects w/ no Widening)

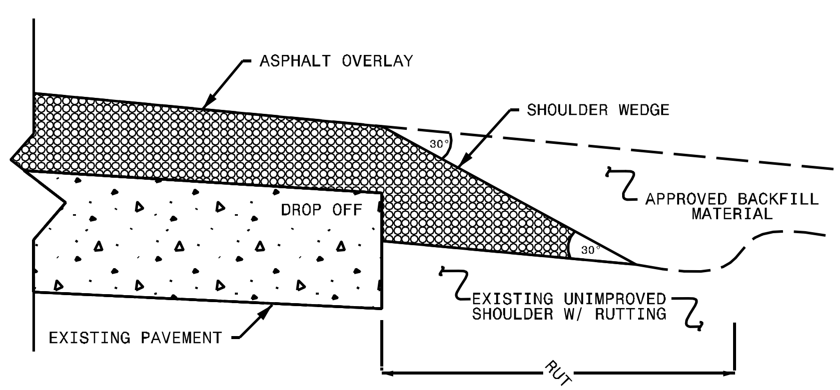


SHOULDER WEDGE DETAIL

(Resurfacing Adjacent to Rutted Shoulder)

## DETAIL
## SHOULDER WEDGE DETAILS

NOTES:
1. DETAIL DOES NOT APPLY TO OGAFC AND ULTRA-THIN BONDED WEARING COURSE.
2. BACKFILL SHOULDER WITH APPROVED MATERIAL.
3. THE SHOULDER WEDGE DEVICE MAY BE DISENGAGED AT PAVED DRIVEWAYS AND SIDE STREETS.

## TYPICAL SECTION NO. 1

MAP 1: WIDEN & RESURFACE SR 1300 FROM 500′ NORTH OF US 70 TO THE END OF RADIUS ON NORTH SIDE OF SR 1163.

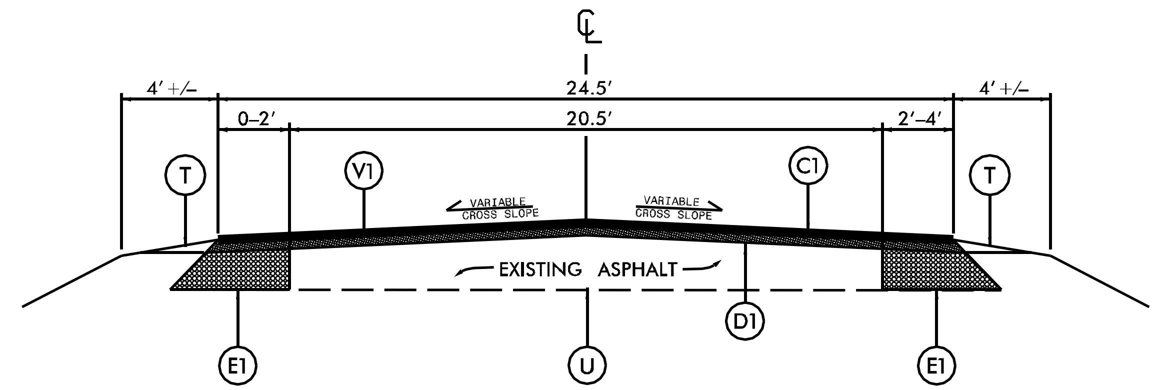


NOTE:
1. PLACE ASYMMETRICAL WIDENING AS DIRECTED BY THE ENGINEER. MAKE FLUSH WITH THE EXISTING ASHALT.
2. TRENCHING SHALL BE PERFORMED USING A MILLING MACHINE OR SIMILAR DEVICE.
3. PLACE ASPHALT SURFACE COURSE AT FULL WIDTH, INCLUDING NEW WIDENING.
4. MILL APPROX. 0 TO 1-¾″ MILLING AS REQUIRED TO FIND AN ACCEPTABLE LAYER OF ASPHALT OR AS DIRECTED BY THE ENGINEER.

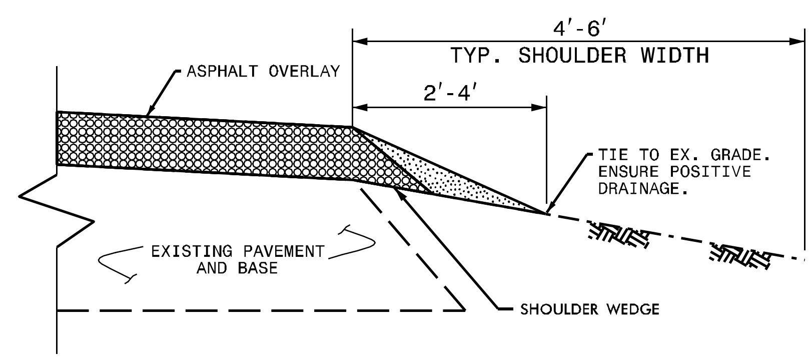


## SHOULDER RECONSTRUCTION DETAIL

NOTE:

1. SHOULDERS SHALL BE RECONSTRUCTED AS SHOWN IN STD. DWG. NO. 560.01 & 560.02, WITH A MINIMUM SLOPE OF 1″ PER FOOT TO ENSURE POSITIVE DRAINAGE AWAY FROM THE ROADWAY.
2. A VEGETATIVE BUFFER SHALL BE MAINTAINED BETWEEN THE DISTURBED AREA ALONG THE EDGE OF PAVEMENT AND THE DITCH SHOULDER POINT TO MINIMIZE EROSION. PULLING DITCHES OR CUTTING SHOULDERS TO GENERATE BORROW MATERIAL WILL NOT BE ALLOWED.
3. REQUIRED BORROW MATERIAL MAY BE OBTAINED FROM NCDOT APPROVED BORROW PITS OR FROM NCDOT STOCKPILES. ANY EXCESS MATERIAL SHALL BE DISPOSED OF BY THE CONTRACTOR IN AN APPROVED DISPOSAL SITE.

| PAVEMENT SCHEDULE | |
|---|---|
| C1 | PROP APPROX, 1-¾″ASPHALT CONCRETE SURFACE COURSE, TYPE S 9.5B, AT AN AVERAGE RATE OF 196 LBS PER SQ. YD. |
| D1 | PROP APPROX, 2½″ASPHALT CONCRETE INTERMEDIATE COURSE, TYPE I 19.0B, AT AN AVERAGE RATE OF 285 LBS PER SQ. YD. |
| E1 | PROP APPROX, 5″ASPHALT CONCRETE BASE COURSE, TYPE B 25.0B, AT AN AVERAGE RATE OF 570 LBS PER SQ. YD. |
| T | EARTH MATERIAL |
| U | EXISTING PAVEMENT |
| V1 | MILLING DEPTH APPROX. 0 to 1-¾″ FOR THE ENTIRE WIDTH OF ROADWAY. |

NOTE: PAVEMENT EDGE SLOPES ARE 1:1 UNLESS SHOWN OTHERWISE.

$$$$SYSTIME$$$$
$$$$$$$$$DGN$$$$$$$$$$$$$$$$$$$
$$$$USERNAME$$$$