This electronic collection of documents is provided for the convenience of the user and is Not a Certified Document –

The documents contained herein were originally issued and sealed by the individuals whose names and license numbers appear on each page, on the dates appearing with their signature on that page.

This file or an individual page shall not be considered a certified document.

DocuSign Envelope ID: FBACBBBB-90EA-4BDE-B946-843343F230E8

TIP PROJECT: 17BP.2.R.86

CONTRACT: DB00480

See Sheet 1A For Index of Sheets
See Sheet 1B For Conventional Symbols

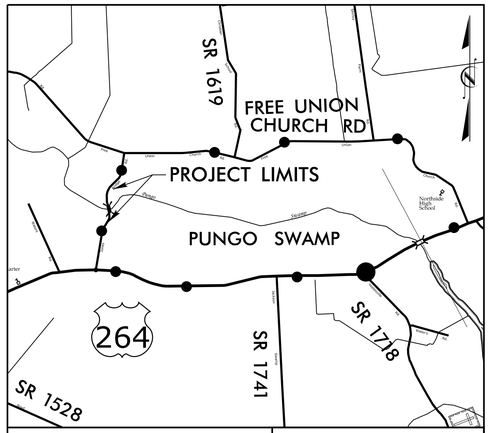

VICINITY MAP

OFFSITE DETOUR

STATE OF NORTH CAROLINA
DIVISION OF HIGHWAYS

BEAUFORT COUNTY

LOCATION: REPLACE BRIDGE NO. 159 OVER PUNGO SWAMP

TYPE OF WORK: GRADING, DRAINAGE, PAVING AND STRUCTURE

STATE	STATE PROJECT REFERENCE NO.	SHEET NO.	TOTAL SHEETS
N.C.	17BP.2.R.86	1	

STATE PROJ. NO.	F.A. PROJ. NO.	DESCRIPTION
17BP.2.R.86		PE
17BP.2.R.86		RW/UTIL
17BP.2.R.86		CONST.

NAD 83/
NAD 2011

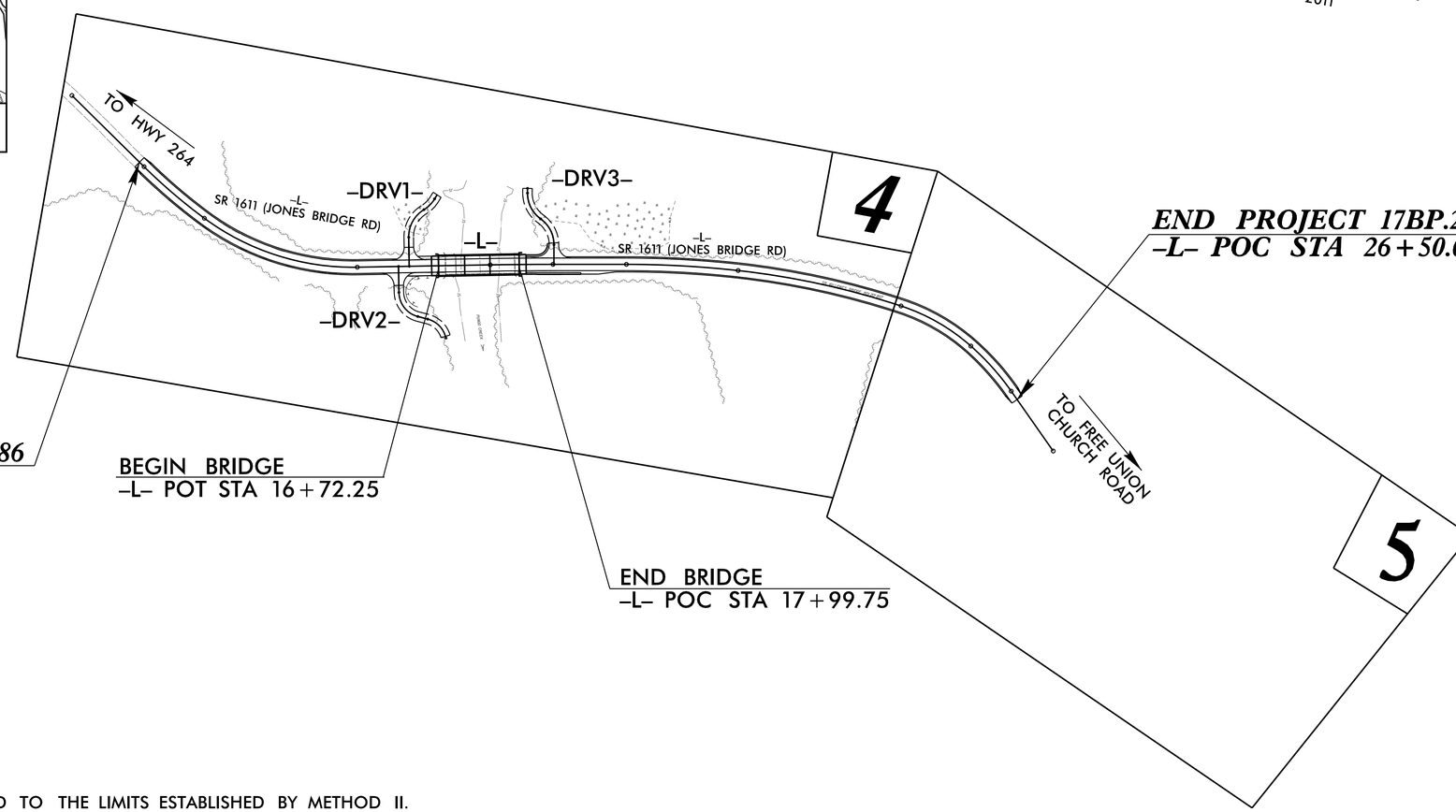

END PROJECT 17BP.2.R.86
-L- POC STA 26+50.00

BEGIN PROJECT 17BP.2.R.86
-L- POC STA 11+50.00

BEGIN BRIDGE
-L- POT STA 16+72.25

END BRIDGE
-L- POC STA 17+99.75

NOTES:

1. CLEARING ON THIS PROJECT SHALL BE PERFORMED TO THE LIMITS ESTABLISHED BY METHOD II.
2. THIS PROJECT IS NOT WITHIN ANY MUNICIPAL BOUNDARIES.

DOCUMENT NOT CONSIDERED FINAL UNLESS ALL SIGNATURES COMPLETED

GRAPHIC SCALES

50 25 0 50 100
PLANS

50 25 0 50 100
PROFILE (HORIZONTAL)

10 5 0 10 20
PROFILE (VERTICAL)

DESIGN DATA

ADT 2013 = 350
ADT 2033 = 660
K = 10 %
D = 60 %
T = 6 % *
V = 45 MPH
* TTST =2% DUAL 4%
FUNC CLASS =
LOCAL
SUB-REGIONAL TIER

PROJECT LENGTH

LENGTH OF ROADWAY PROJECT 17BP.2.R.86 = 0.260 MILES
LENGTH OF STRUCTURE PROJECT 17BP.2.R.86 = 0.024 MILES

TOTAL LENGTH OF PROJECT 17BP.2.R.86 = 0.284 MILES

HNTB

Prepared in the Office of:
HNTB NORTH CAROLINA, P.C.
343 E. Six Forks Road, Suite 200
Raleigh, North Carolina 27609
NC License No: C-1554

2018 STANDARD SPECIFICATIONS

RIGHT OF WAY DATE:
FEBRUARY 6, 2019

LETTING DATE:
JUNE 26, 2019

DOUGLAS WHEATLEY, PE
PROJECT ENGINEER

ROY H. TELLIER, PE
PROJECT DESIGN ENGINEER

MICHAEL C. AMAN, PE
NCDOT CONTACT

HYDRAULICS ENGINEER

DocuSigned by:
James A. Byrd
23982986545478...
4/29/2019 P.E.
SIGNATURE:

NORTH CAROLINA PROFESSIONAL SEAL 15764 ENGINEER JAMES A. BYRD

ROADWAY DESIGN ENGINEER

DocuSigned by:
Roy Tellier
BE7D8DB0AEBC430...
4/29/2019 P.E.
SIGNATURE:

NORTH CAROLINA PROFESSIONAL SEAL 044575 ENGINEER ROY H. TELLIER

STATE OF NORTH CAROLINA DEPARTMENT OF TRANSPORTATION

29-APR-2019 09:09
\Roadway\Proj\17BP.2.R.86_RDY_TSH.dgn
HNTB

DocuSign Envelope ID: EE695FE6-1227-48D5-8A6E-51F1F1DE45A5

8/17/99

PROJECT REFERENCE NO.	SHEET NO.
17BP.2.R.86	1A

ROADWAY DESIGN ENGINEER

NORTH CAROLINA PROFESSIONAL SEAL 044575 ENGINEER

DocuSigned by: Robert Hazelleer II
4/24/2019

DOCUMENT NOT CONSIDERED FINAL UNLESS ALL SIGNATURES COMPLETED

INDEX OF SHEETS

SHEET NUMBER	SHEET
1	TITLE SHEET
1A	INDEX OF SHEETS, GENERAL NOTES & LIST OF STANDARDS
1B	SYMBOLOGY SHEET
RW02C–1 THRU RW02C–2	SURVEY CONTROL SHEETS
2A–1	TYPICAL SECTIONS
2B–1	ROADWAY DETAILS
2C–1 THRU 2C–3	SPECIAL DETAILS
3B–1	ROADWAY SUMMARY SHEETS
3G–1	GEOTECHNICAL SUMMARY SHEETS
4 THRU 6	PLAN & PROFILE SHEETS
TMP–1 THRU TMP–2	TRAFFIC CONTROL PLANS
EC–1 THRU EC–5	EROSION CONTROL PLANS
RF–1	REFORESTATION PLANS
UC–1 THRU UC–4	UTILITY CONSTRUCTION PLANS
U0–1 THRU UO–2	UTILITIES BY OTHER PLANS
X–1 THRU X–14	CROSS SECTION SHEETS
S–1 THRU S–20	STRUCTURE PLANS

GENERAL NOTES: 2018 SPECIFICATIONS

EFFECTIVE: 01–16–2018
REVISED:

GRADING AND SURFACING OR RESURFACING AND WIDENING:

THE GRADE LINES SHOWN DENOTE THE FINISHED ELEVATION OF THE PROPOSED SURFACING AT GRADE POINTS SHOWN ON THE TYPICAL SECTIONS. WHERE NO GRADE LINES ARE SHOWN, THE PROFILES SHOWN DENOTE THE TOP ELEVATION OF THE EXISTING PAVEMENT ALONG THE CENTER LINE OF SURVEY ON WHICH THE PROPOSED RESURFACING WILL BE PLACED. GRADE LINES MAY BE ADJUSTED BY THE ENGINEER IN ORDER TO SECURE A PROPER TIE–IN.

CLEARING:

CLEARING ON THIS PROJECT SHALL BE PERFORMED TO THE LIMITS ESTABLISHED BY METHOD II.

SUPERELEVATION:

ALL CURVES ON THIS PROJECT SHALL BE SUPERELEVATED IN ACCORDANCE WITH STD. NO. 225.04 USING THE RATE OF SUPERELEVATION AND RUNOFF SHOWN ON THE PLANS. SUPERELEVATION IS TO BE REVOLVED ABOUT THE GRADE POINTS SHOWN ON THE TYPICAL SECTIONS.

SHOULDER CONSTRUCTION:

ASPHALT, EARTH, AND CONCRETE SHOULDER CONSTRUCTION ON THE HIGH SIDE OF SUPERELEVATED CURVES SHALL BE IN ACCORDANCE WITH STD. NO. 560.01

SUBSURFACE DRAINS:

SUBSURFACE DRAINS SHALL BE CONSTRUCTED IN ACCORDANCE WITH STD. NO. 815.02 AT LOCATIONS DIRECTED BY THE ENGINEER.

GUARDRAIL:

THE GUARDRAIL LOCATIONS SHOWN ON THE PLANS MAY BE ADJUSTED DURING CONSTRUCTION AS DIRECTED BY THE ENGINEER. THE CONTRACTOR SHOULD CONSULT WITH THE ENGINEER PRIOR TO ORDERING GUARDRAIL MATERIAL.

TEMPORARY SHORING:

SHORING REQUIRED FOR THE MAINTENANCE OF TRAFFIC WILL BE PAID FOR AS "EXTRA WORK" IN ACCORDANCE WITH SECTION 104–7.

END BENTS:

THE ENGINEER SHALL CHECK THE STRUCTURE END BENT PLANS, DETAILS, AND CROSS–SECTION PRIOR TO SETTING OF THE SLOPE STAKES FOR THE EMBANKMENT OR EXCAVATION APPROACHING A BRIDGE.

UTILITIES:

UTILITY OWNERS ON THIS PROJECT ARE

POWER – CITY OF WASHINGTON
PHONE – TRI COUNTY COMMUNICATIONS
WATER – BEAUFORT COUNTY WATER

ANY RELOCATION OF EXISTING UTILITIES WILL BE ACCOMPLISHED BY OTHERS, EXCEPT AS SHOWN ON PLANS.

RIGHT–OF–WAY MARKERS:

ALL RIGHT–OF–WAY MARKERS ON THIS PROJECT SHALL BE PLACED BY OTHERS.

EFF. 01–16–2018
REV.

2018 ROADWAY ENGLISH STANDARD DRAWINGS

The following Roadway Standards as appear in "Roadway Standard Drawings" Highway Design Branch – N. C. Department of Transportation – Raleigh, N. C., Dated January, 2018 are applicable to this project and by reference hereby are considered a part of these plans:

STD.NO.	TITLE
DIVISION 2 – EARTHWORK	
200.02	Method of Clearing – Method II
225.04	Method of Obtaining Superelevation – Two Lane Pavement
DIVISION 3 – PIPE CULVERTS	
300.01	Method of Pipe Installation
DIVISION 4 – MAJOR STRUCTURES	
422.02	Bridge Approach Fills – Type II Modified Approach Fill
DIVISION 5 – SUBGRADE, BASES AND SHOULDERS	
560.02	Method of Shoulder Construction – High Side of Superelevated Curve – Method II
DIVISION 8 – INCIDENTALS	
815.02	Subsurface Drain
840.29	Frames and Narrow Slot Flat Grates
840.35	Traffic Bearing Grated Drop Inlet – for Cast Iron Double Frame and Grates
840.66	Drainage Structure Steps
846.01	Concrete Curb, Gutter and Curb & Gutter
846.04	Drop Inlet Installation in Shoulder Berm Gutter
862.01	Guardrail Placement
862.02	Guardrail Installation (Special Detail for Sheet 6 of 8)
862.03	Structure Anchor Units (Special Detail for Type III Anchor Units Sheets 1 of 7 and 2 of 7)
876.01	Rip Rap in Channels
876.02	Guide for Rip Rap at Pipe Outlets

15-APR-2019 07:06
S:\Highway\Proj\17BP.2.R.86_RDY_GEN.dgn
jhnr

12/2/2016

PROJECT REFERENCE NO.	SHEET NO.
17BP.2.R.86	1B

STATE OF NORTH CAROLINA, DIVISION OF HIGHWAYS

CONVENTIONAL PLAN SHEET SYMBOLS

Note: Not to Scale

**S.U.E. = Subsurface Utility Engineering*

BOUNDARIES AND PROPERTY:

- State Line
- County Line
- Township Line
- City Line
- Reservation Line
- Property Line
- Existing Iron Pin — EIP
- Computed Property Corner
- Property Monument — ECM
- Parcel/Sequence Number — 123
- Existing Fence Line
- Proposed Woven Wire Fence
- Proposed Chain Link Fence
- Proposed Barbed Wire Fence
- Existing Wetland Boundary — WLB
- Proposed Wetland Boundary — WLB
- Existing Endangered Animal Boundary — EAB
- Existing Endangered Plant Boundary — EPB
- Existing Historic Property Boundary — HPB
- Known Contamination Area: Soil — S
- Potential Contamination Area: Soil — S
- Known Contamination Area: Water — W
- Potential Contamination Area: Water — W
- Contaminated Site: Known or Potential

BUILDINGS AND OTHER CULTURE:

- Gas Pump Vent or U/G Tank Cap
- Sign — S
- Well — W
- Small Mine
- Foundation
- Area Outline
- Cemetery
- Building
- School
- Church
- Dam

HYDROLOGY:

- Stream or Body of Water
- Hydro, Pool or Reservoir
- Jurisdictional Stream — JS
- Buffer Zone 1 — BZ 1
- Buffer Zone 2 — BZ 2
- Flow Arrow
- Disappearing Stream
- Spring
- Wetland
- Proposed Lateral, Tail, Head Ditch — FLOW
- False Sump

RAILROADS:

- Standard Gauge — CSX TRANSPORTATION
- RR Signal Milepost — MILEPOST 35
- Switch — SWITCH
- RR Abandoned
- RR Dismantled

RIGHT OF WAY & PROJECT CONTROL:

- Secondary Horiz and Vert Control Point
- Primary Horiz Control Point
- Primary Horiz and Vert Control Point
- Exist Permanent Easment Pin and Cap
- New Permanent Easement Pin and Cap
- Vertical Benchmark
- Existing Right of Way Marker
- Existing Right of Way Line
- New Right of Way Line — RW
- New Right of Way Line with Pin and Cap — RW
- New Right of Way Line with Concrete or Granite R/W Marker — RW
- New Control of Access Line with Concrete C/A Marker — CA
- Existing Control of Access — CA
- New Control of Access — CA
- Existing Easement Line — E
- New Temporary Construction Easement — E
- New Temporary Drainage Easement — TDE
- New Permanent Drainage Easement — PDE
- New Permanent Drainage / Utility Easement — DUE
- New Permanent Utility Easement — PUE
- New Temporary Utility Easement — TUE
- New Aerial Utility Easement — AUE

ROADS AND RELATED FEATURES:

- Existing Edge of Pavement
- Existing Curb
- Proposed Slope Stakes Cut — C
- Proposed Slope Stakes Fill — F
- Proposed Curb Ramp — CR
- Existing Metal Guardrail
- Proposed Guardrail
- Existing Cable Guiderail
- Proposed Cable Guiderail
- Equality Symbol
- Pavement Removal

VEGETATION:

- Single Tree
- Single Shrub
- Hedge
- Woods Line
- Orchard
- Vineyard — Vineyard

EXISTING STRUCTURES:

MAJOR:

- Bridge, Tunnel or Box Culvert — CONC
- Bridge Wing Wall, Head Wall and End Wall — CONC WW

MINOR:

- Head and End Wall — CONC HW
- Pipe Culvert
- Footbridge
- Drainage Box: Catch Basin, DI or JB — CB
- Paved Ditch Gutter
- Storm Sewer Manhole — S
- Storm Sewer — S

UTILITIES:

POWER:

- Existing Power Pole
- Proposed Power Pole
- Existing Joint Use Pole
- Proposed Joint Use Pole
- Power Manhole — P
- Power Line Tower
- Power Transformer
- U/G Power Cable Hand Hole
- H-Frame Pole
- U/G Power Line LOS B (S.U.E.*) — P
- U/G Power Line LOS C (S.U.E.*) — P
- U/G Power Line LOS D (S.U.E.*) — P

TELEPHONE:

- Existing Telephone Pole
- Proposed Telephone Pole
- Telephone Manhole — T
- Telephone Pedestal — T
- Telephone Cell Tower
- U/G Telephone Cable Hand Hole
- U/G Telephone Cable LOS B (S.U.E.*) — T
- U/G Telephone Cable LOS C (S.U.E.*) — T
- U/G Telephone Cable LOS D (S.U.E.*) — T
- U/G Telephone Conduit LOS B (S.U.E.*) — TC
- U/G Telephone Conduit LOS C (S.U.E.*) — TC
- U/G Telephone Conduit LOS D (S.U.E.*) — TC
- U/G Fiber Optics Cable LOS B (S.U.E.*) — T FO
- U/G Fiber Optics Cable LOS C (S.U.E.*) — T FO
- U/G Fiber Optics Cable LOS D (S.U.E.*) — T FO

WATER:

- Water Manhole — W
- Water Meter
- Water Valve
- Water Hydrant
- U/G Water Line LOS B (S.U.E*) — W
- U/G Water Line LOS C (S.U.E*) — W
- U/G Water Line LOS D (S.U.E*) — W
- Above Ground Water Line — A/G Water

TV:

- TV Pedestal — C
- TV Tower
- U/G TV Cable Hand Hole — HH
- U/G TV Cable LOS B (S.U.E.*) — TV
- U/G TV Cable LOS C (S.U.E.*) — TV
- U/G TV Cable LOS D (S.U.E.*) — TV
- U/G Fiber Optic Cable LOS B (S.U.E.*) — TV FO
- U/G Fiber Optic Cable LOS C (S.U.E.*) — TV FO
- U/G Fiber Optic Cable LOS D (S.U.E.*) — TV FO

GAS:

- Gas Valve
- Gas Meter
- U/G Gas Line LOS B (S.U.E.*) — G
- U/G Gas Line LOS C (S.U.E.*) — G
- U/G Gas Line LOS D (S.U.E.*) — G
- Above Ground Gas Line — A/G Gas

SANITARY SEWER:

- Sanitary Sewer Manhole
- Sanitary Sewer Cleanout
- U/G Sanitary Sewer Line — SS
- Above Ground Sanitary Sewer — A/G Sanitary Sewer
- SS Forced Main Line LOS B (S.U.E.*) — FSS
- SS Forced Main Line LOS C (S.U.E.*) — FSS
- SS Forced Main Line LOS D (S.U.E.*) — FSS

MISCELLANEOUS:

- Utility Pole
- Utility Pole with Base
- Utility Located Object
- Utility Traffic Signal Box — S
- Utility Unknown U/G Line LOS B (S.U.E.*) — ?UTL
- U/G Tank; Water, Gas, Oil
- Underground Storage Tank, Approx. Loc. — UST
- A/G Tank; Water, Gas, Oil
- Geoenvironmental Boring
- U/G Test Hole LOS A (S.U.E.*)
- Abandoned According to Utility Records — AATUR
- End of Information — E.O.I.

DocuSign Envelope ID: EE695FE6-1227-48D5-8A6E-51F1F1DE45A5

PAVEMENT SCHEDULE

C1	PROP. APPROX. 3" ASPHALT CONCRETE SURFACE COURSE, TYPE S9.5B, AT AN AVERAGE RATE OF 165 LBS. PER SQ. YARD IN EACH OF TWO LAYERS.
C2	PROP. VARIABLE DEPTH ASPHALT CONCRETE SURFACE COURSE, TYPE S9.5B AT AN AVERAGE RATE OF 110 LBS. PER SQ. YARD PER INCH. DEPTH TO BE PLACED IN LAYERS NOT LESS THAN 1" IN DEPTH OR GREATER THAN 1.5" IN DEPTH.
E1	PROP. APPROX. 5" ASPHALT CONCRETE BASE COURSE, TYPE B25.0C, AT AN AVERAGE RATE OF 570 LBS. PER SQ. YARD.
R	SHOULDER BERM GUTTER
T	EARTH MATERIAL
U	EXISTING PAVEMENT
W	WEDGING (SEE DETAIL)

ALL PAVEMENT EDGE SLOPES ARE 1:1 UNLESS SHOWN OTHERWISE

HNTB NORTH CAROLINA, P.C.
343 E. Six Forks Road, Suite 200
Raleigh, North Carolina 27609
NC License No: C-1554

PROJECT REFERENCE NO.	SHEET NO.
17BP.2.R.86	2A-1

ROADWAY DESIGN ENGINEER

NORTH CAROLINA PROFESSIONAL SEAL 044575 ENGINEER

DocuSigned by: Brian Mayo Mueller, II
BF7D8C4A4A4A4A4...
4/24/2019

DOCUMENT NOT CONSIDERED FINAL UNLESS ALL SIGNATURES COMPLETED

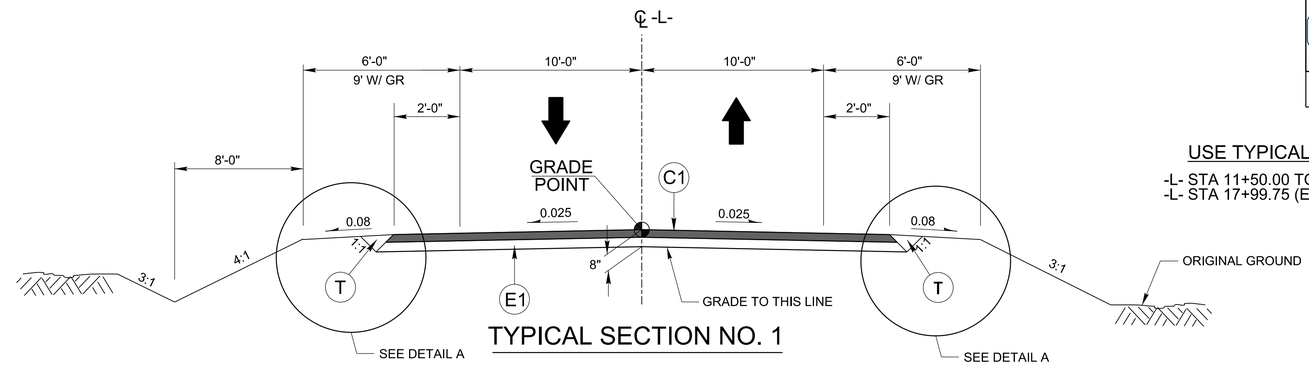

TYPICAL SECTION NO. 1

USE TYPICAL SECTION NO. 1 FROM:

-L- STA 11+50.00 TO STA 16+72.25 (BEGIN BRIDGE)
-L- STA 17+99.75 (END BRIDGE) TO STA 26+50.00

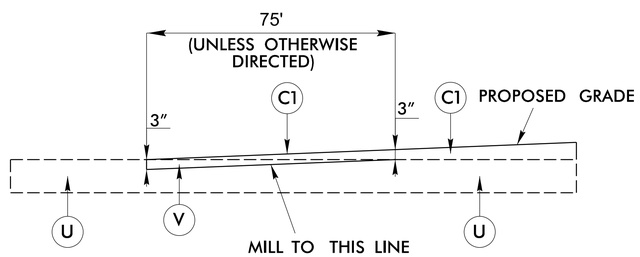

DETAIL FOR INCIDENTAL MILLING

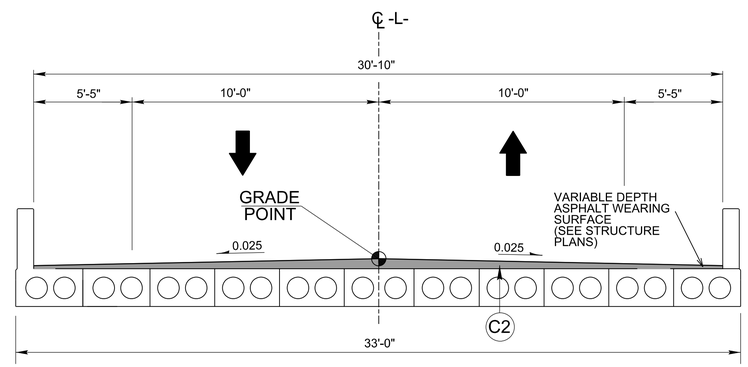

TYPICAL SECTION NO. 2

CORED SLAB BRIDGE OVERLAY

USE TYPICAL SECTION NO. 2 FROM:

-L- STA 16+72.25 TO STA 17+99.75

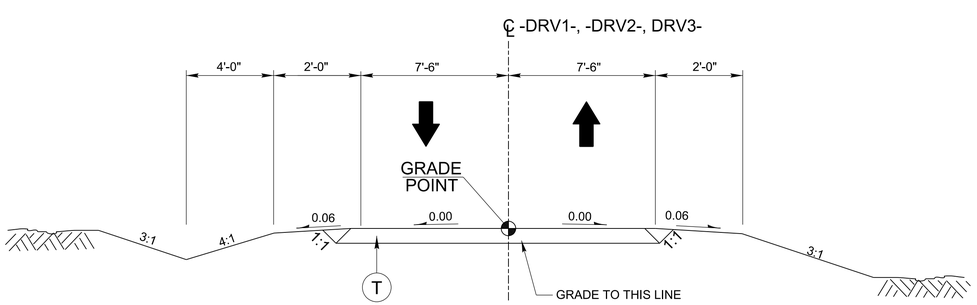

TYPICAL SECTION NO. 3

-DRV1- STA 10+00.00 TO STA 11+19.75
-DRV2- STA 10+10.00 TO STA 11+50.00
-DRV3- STA 10+10.00 TO STA 11+23.68

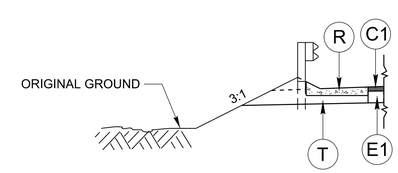

DETAIL A

SHOULDER BERM GUTTER LOCATIONS

-L- STA 18+10.62 TO STA 18+97.28 RT

-L- STA. 18+10.62 LT TO -DRV3- STA 10+99.89 RT

15-APR-2019 07:06
S:\Roadway\proj\17BP.2.R.86_rdy_typ.dgn
HNTB

PROJECT REFERENCE NO.	SHEET NO.
060159	RW02C-1
Location and Surveys	

SURVEY CONTROL SHEET

W/ EXISTING CENTERLINE ALIGNMENTS PRIOR TO CONSTRUCTION

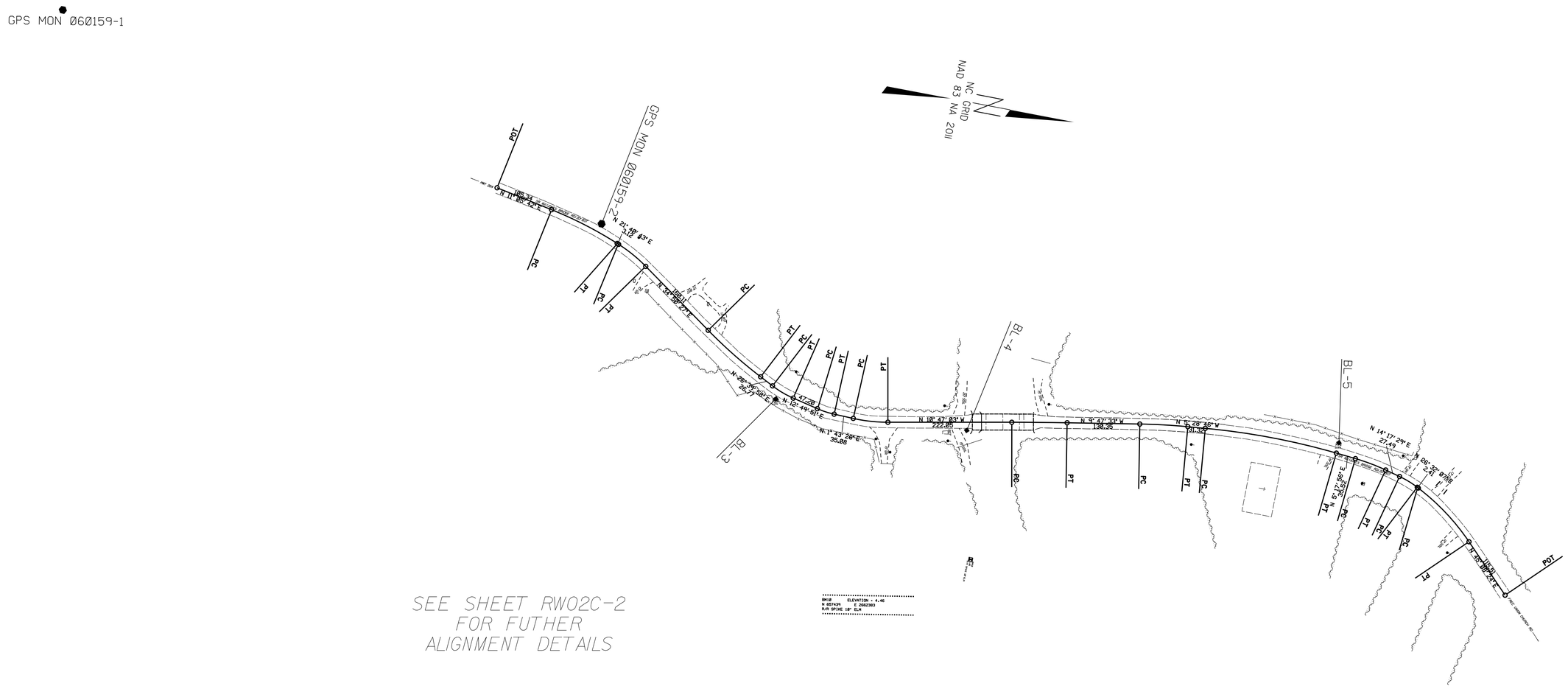

NOTES:

1. PROJECT CONTROL WAS ESTABLISHED USING GNSS, THE GLOBAL NAVIGATION SATELLITE SYSTEM.

2. THE SURVEY CONTROL DATA FOR THIS PROJECT HAS BEEN COMPILED FROM VARIOUS SOURCES. IF FURTHER INFORMATION REGARDING PROJECT CONTROL IS NEEDED, PLEASE CONTACT THE LOCATION AND SURVEYS UNIT.

6/2/99
09-APR-2010 08:36
V7.8 z:\06_Beaufort BR159\Final Survey\060159_LS_RW02C-1.dgn
INTER

PROJECT REFERENCE NO.	SHEET NO.
060159	RW02C-2
Location and Surveys	

SURVEY CONTROL SHEET

W/ EXISTING CENTERLINE ALIGNMENTS PRIOR TO CONSTRUCTION

BL

POINT	DESC.	NORTH	EAST	ELEVATION
601591	GPS MON 060159-	655656.5658	2661720.7874	12.09
601592	GPS MON 060159-	656676.9208	2661916.1911	12.16
BL3	BL-3	657042.5024	2662165.6579	8.24
BL4	BL-4	657389.1420	2662156.8430	6.22
BL5	BL-5	658048.5520	2662053.6580	7.75

****
BM10 ELEVATION = 4.46
N 657439 E 2662383
R/R SPIKE 10" ELM
****

EL

POINT	N	E	BEARING	DIST	DELTA	D	L	T	R
POT	656480.839	2661887.822							
LINE			N 11°05'42.2" E	105.34					
PC	656584.212	2661908.094							
CURVE			N 16°23'12.7" E	132.11	10°35'01.0"(RT)	08°00'00.0"	132.30	66.34	716.20
PT	656710.953	2661945.364							
LINE			N 21°40'43.2" E	3.12					
PC	656713.851	2661946.516							
CURVE			N 28°15'35.0" E	62.54	13°09'43.7"(RT)	21°00'00.0"	62.68	31.48	272.84
PT	656768.936	2661976.126							
LINE			N 34°50'26.9" E	160.11					
PC	656900.342	2662067.595							
CURVE			N 30°45'12.2" E	125.66	08°10'29.3"(LT)	06°30'00.0"	125.77	62.99	881.47
PT	657008.331	2662131.850							
LINE			N 26°39'57.6" E	26.77					
PC	657032.249	2662143.862							
CURVE			N 19°44'54.2" E	43.13	13°50'06.7"(LT)	32°00'00.0"	43.23	21.72	179.05
PT	657072.842	2662158.435							
LINE			N 12°49'50.9" E	47.20					
PC	657118.860	2662168.916							
CURVE			N 07°16'38.4" E	31.68	11°06'25.0"(LT)	35°00'00.0"	31.73	15.92	163.70
PT	657150.289	2662172.929							
LINE			N 01°43'25.9" E	35.08					
PC	657185.350	2662173.985							
CURVE			N 04°31'48.7" W	62.42	12°30'29.1"(LT)	20°00'00.0"	62.54	31.40	286.48
PT	657247.571	2662169.055							
LINE			N 10°47'03.2" W	222.05					
PC	657465.703	2662127.506							
CURVE			N 10°17'18.1" W	99.17	00°59'30.3"(RT)	01°00'00.0"	99.18	49.59	5729.58
PT	657563.282	2662109.793							
LINE			N 09°47'32.9" W	130.35					
PC	657691.734	2662087.623							
CURVE			N 07°38'09.5" W	86.24	04°18'46.8"(RT)	05°00'00.0"	86.26	43.15	1145.92
PT	657777.209	2662076.164							
LINE			N 05°28'46.1" W	31.32					
PC	657808.386	2662073.173							
CURVE			N 00°05'25.0" W	239.17	10°46'42.1"(RT)	04°30'00.0"	239.52	120.11	1273.24
PT	658047.552	2662072.796							
LINE			N 05°17'56.0" E	35.52					
PC	658082.917	2662076.076							
CURVE			N 09°47'42.8" E	57.96	08°59'33.5"(RT)	15°30'00.0"	58.02	29.07	369.65
PT	658140.030	2662085.936							
LINE			N 14°17'29.5" E	27.49					
PC	658166.672	2662092.723							
CURVE			N 20°24'48.1" E	37.03	12°14'37.2"(RT)	33°00'00.0"	37.10	18.62	173.62
PT	658201.377	2662105.639							
LINE			N 26°32'06.7" E	2.41					
PC	658203.534	2662106.716							
CURVE			N 35°50'15.2" E	132.31	18°36'17.0"(RT)	14°00'00.0"	132.89	67.04	409.26
PT	658310.793	2662184.181							
LINE			N 45°08'23.6" E	115.51					
POT	658392.269	2662266.056							

NOTES:

1. PROJECT CONTROL WAS ESTABLISHED USING GNSS, THE GLOBAL NAVIGATION SATELLITE SYSTEM.

2. THE SURVEY CONTROL DATA FOR THIS PROJECT HAS BEEN COMPILED FROM VARIOUS SOURCES. IF FURTHER INFORMATION REGARDING PROJECT CONTROL IS NEEDED, PLEASE CONTACT THE LOCATION AND SURVEYS UNIT.

6/2/99
09-APR-2018 08:36
N:\72A2306_Beaufort BR159\Final Survey\060159_LS_RW02C-2.dgn
HNTB

DocuSign Envelope ID: 423591 44-BDFF-4B94-8608-026E53CEB5DF

8/17/99

HNTB
HNTB NORTH CAROLINA, P.C.
343 E. Six Forks Road, Suite 200
Raleigh, North Carolina 27609
NC License No: C-1554

PROJECT REFERENCE NO.	SHEET NO.
17BP.2.R.86	2B-1

ROADWAY DESIGN ENGINEER

NORTH CAROLINA PROFESSIONAL SEAL 044575 ENGINEER

DocuSigned by: Rob Tellier, II
4/29/2019

DOCUMENT NOT CONSIDERED FINAL UNLESS ALL SIGNATURES COMPLETED

DETAIL OF HORIZONTAL ALIGNMENT INFORMATION

SCALE: 1" = 80'

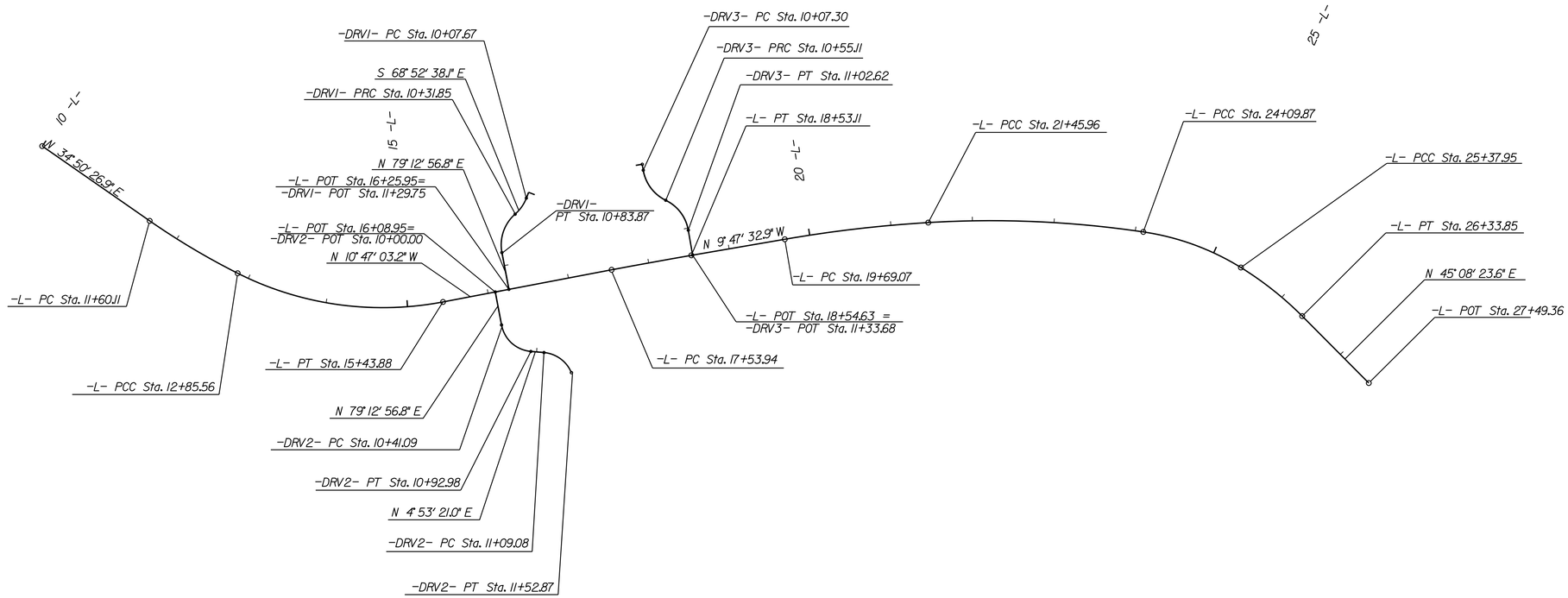

-L-

PI Sta 12+22.94	PI Sta 14+19.53	PI Sta 18+03.53	PI Sta 20+57.60	PI Sta 22+78.39	PI Sta 24+74.81	PI Sta 25+86.12
△ = 8° 09' 16.6" (LT)	△ = 37° 28' 13.5" (LT)	△ = 0° 59' 30.3" (RT)	△ = 6° 20' 03.4" (RT)	△ = 11° 52' 34.5" (RT)	△ = 23° 17' 44.4" (RT)	△ = 13° 25' 34.2" (RT)
D = 6° 30' 00.0"	D = 14° 30' 18.9"	D = 1° 00' 00.0"	D = 3° 34' 51.6"	D = 4° 30' 00.0"	D = 18° 11' 20.9"	D = 14° 00' 00.0"
L = 125.46'	L = 258.32'	L = 99.18'	L = 176.89'	L = 263.92'	L = 128.07'	L = 95.90'
T = 62.83'	T = 133.97'	T = 49.59'	T = 88.53'	T = 132.43'	T = 64.93'	T = 48.17'
R = 881.47'	R = 395.00'	R = 5,729.58'	R = 1,600.00'	R = 1,273.24'	R = 315.00'	R = 409.26'
V = 45 MPH	V = 35 MPH	V = 45 MPH	V = 45 MPH	V = 45 MPH	V = 35 MPH	V = 35 MPH
SE = 8%	SE = 8%	SE = NC	SE = 6%	SE = 6%	SE = 8%	SE = 8%
RO = 148'	RO = 148'	RO = N/A	RO = 111'	RO = 111'	RO = 148'	RO = 148'

-DRV1-

PI Sta 10+20.00	PI Sta 10+60.49
△ = 27° 42' 32.4" (RT)	△ = 59° 36' 57.5" (LT)
D = 114° 35' 29.6"	D = 114° 35' 29.6"
L = 24.18'	L = 52.02'
T = 12.33'	T = 28.64'
R = 50.00'	R = 50.00'
SE = N/A	SE = N/A
RO = N/A	RO = N/A

-DRV2-

PI Sta 10+71.41	PI Sta 11+33.46
△ = 7° 19' 35.7" (LT)	△ = 62° 43' 25.5" (RT)
D = 143° 14' 22.0"	D = 143° 14' 22.0"
L = 51.89'	L = 43.79'
T = 30.32'	T = 24.38'
R = 40.00'	R = 40.00'
SE = N/A	SE = N/A
RO = N/A	RO = N/A

-DRV3-

PI Sta 10+33.21	PI Sta 10+80.83
△ = 54° 47' 11.9" (LT)	△ = 54° 26' 35.4" (RT)
D = 114° 35' 29.6"	D = 114° 35' 29.6"
L = 47.81'	L = 47.51'
T = 25.91'	T = 25.72'
R = 50.00'	R = 50.00'
SE = N/A	SE = N/A
RO = N/A	RO = N/A

15-APR-2019 07:06
\Roadway\Proj\17BP.2.R.86_RDY_2B-1.dgn
HNTB

DocuSign Envelope ID: 4F598EEC-8433-4408-AB93-761225514F02

STATE OF NORTH CAROLINA
DEPT. OF TRANSPORTATION
DIVISION OF HIGHWAYS
RALEIGH, N.C.

ROADWAY DETAIL DRAWING FOR
STRUCTURE ANCHOR UNITS
GUARDRAIL ANCHOR UNIT, TYPE III
FOR ATTACHMENT TO RAIL ON BRIDGE

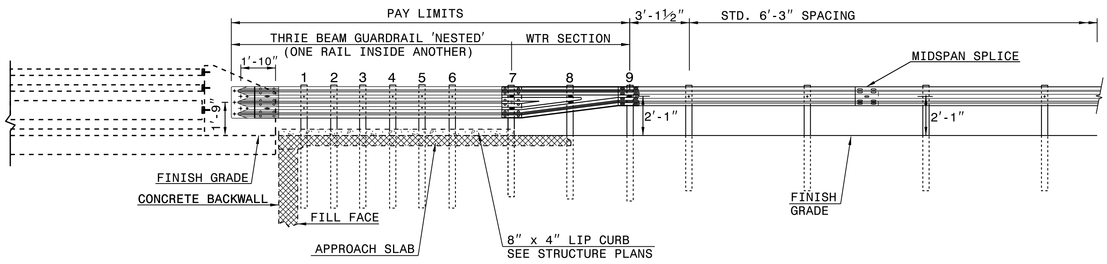

ELEVATION

NOTE:
**POST NOT REQUIRED FOR SKEW ANGLES GREATER THAN 150° OR LESS THAN 30° UNLESS OTHERWISE DIRECTED BY THE ENGINEER.
*THE DISTANCE FROM END OF BRIDGE RAIL TO CENTER LINE OF THE FIRST POST SHOULD BE 11½" IF CONCRETE BACKWALL IS NOT PRESENT.
-SHOULDER BERM GUTTER MUST BE INSTALLED TO THE LIMITS 8" x 4" LIP CURB IS SHOWN IF ANCHOR UNIT IS NOT ADJACENT TO AN APPROACH SLAB.
-MEASURE GUARDRAIL HEIGHT FROM THE TOP OF ADJACENT SURFACE (SHOULDER, BERM, OR GUTTER).
-LAP JOINTS IN THE DIRECTION OF TRAFFIC FLOW.
-SEE SHEET 3 FOR POST SECTIONS 1 THRU 9.

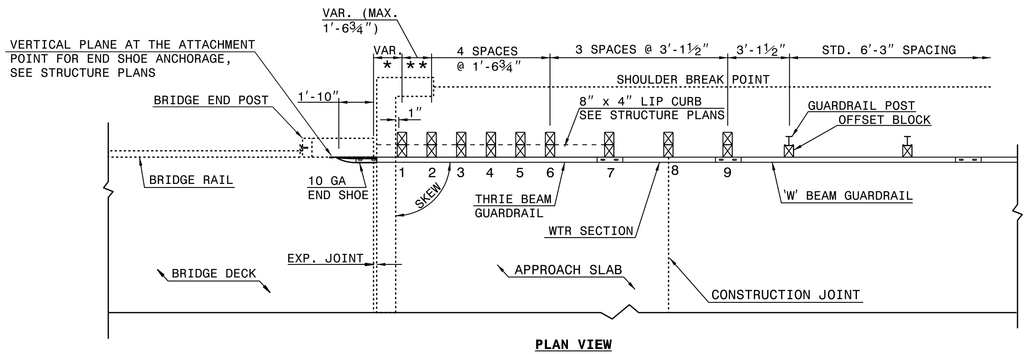

PLAN VIEW

GUARDRAIL ANCHOR UNIT, TYPE III FOR ATTACHMENT TO RAIL ON BRIDGE

SHEET 1 OF 7
862D03

STATE OF NORTH CAROLINA
DEPT. OF TRANSPORTATION
DIVISION OF HIGHWAYS
RALEIGH, N.C.

ROADWAY DETAIL DRAWING FOR
STRUCTURE ANCHOR UNITS
GUARDRAIL ANCHOR UNIT, TYPE III
FOR ATTACHMENT TO RAIL ON BRIDGE

SHEET 1 OF 7
862D03

STATE OF NORTH CAROLINA
DEPT. OF TRANSPORTATION
DIVISION OF HIGHWAYS
RALEIGH, N.C.

ROADWAY DETAIL DRAWING FOR
STRUCTURE ANCHOR UNITS
GUARDRAIL ANCHOR UNIT, TYPE III FOR ATTACHMENT TO
RAIL ON BRIDGE - SUB REGIONAL TIER

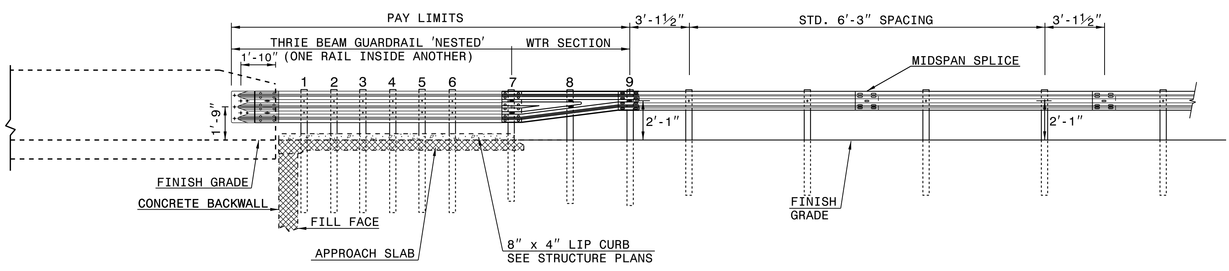

ELEVATION

NOTE:
**POST NOT REQUIRED FOR SKEW ANGLES GREATER THAN 150° OR LESS THAN 30° UNLESS OTHERWISE DIRECTED BY THE ENGINEER.
*THE DISTANCE FROM END OF BRIDGE RAIL TO CENTER LINE OF THE FIRST POST SHOULD BE 11½" IF CONCRETE BACKWALL IS NOT PRESENT.
-SHOULDER BERM GUTTER MUST BE INSTALLED TO THE LIMITS 8" x 4" LIP CURB IS SHOWN IF ANCHOR UNIT IS NOT ADJACENT TO AN APPROACH SLAB.
-MEASURE GUARDRAIL HEIGHT FROM THE TOP OF ADJACENT SURFACE (SHOULDER, BERM, OR GUTTER).
-LAP JOINTS IN THE DIRECTION OF TRAFFIC FLOW.
-SEE SHEET 3 FOR POST SECTIONS 1 THRU 9.

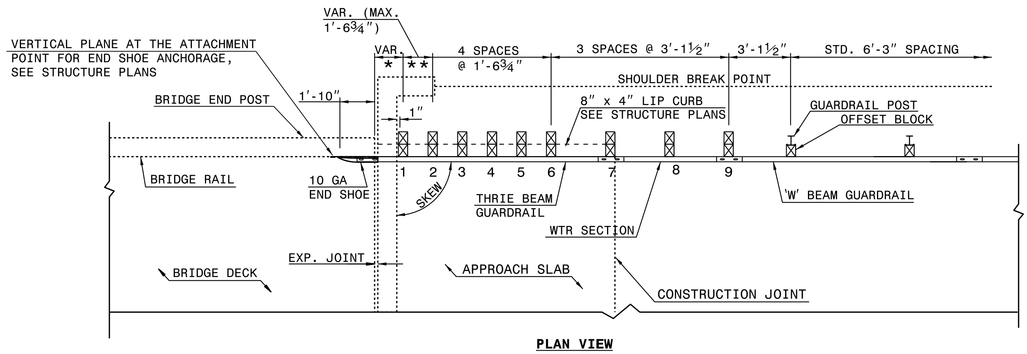

PLAN VIEW

GUARDRAIL ANCHOR UNIT, TYPE III FOR ATTACHMENT TO RAIL ON BRIDGE - SUB REGIONAL TIER

SHEET 2 OF 7
862D03

STATE OF NORTH CAROLINA
DEPT. OF TRANSPORTATION
DIVISION OF HIGHWAYS
RALEIGH, N.C.

ROADWAY DETAIL DRAWING FOR
STRUCTURE ANCHOR UNITS
GUARDRAIL ANCHOR UNIT, TYPE III FOR ATTACHMENT TO
RAIL ON BRIDGE - SUB REGIONAL TIER

SHEET 2 OF 7
862D03

SEE TITLE BLOCK

ORIGINAL BY: J. HOWERTON DATE: 06-22-12
MODIFIED BY: DATE:
CHECKED BY: DATE:
FILE SPEC.:

CONTRACT STANDARDS AND DEVELOPMENT UNIT
Office 919-707-6950 FAX 919-250-4119

DOCUMENT NOT CONSIDERED FINAL UNLESS ALL SIGNATURES COMPLETED

PROJECT REFERENCE NO.
17BP.2.R.86

SHEET NO.
2C-1

DocuSign Envelope ID: 4F59BEEC-B433-44DB-AB93-7613CB514F02

PROJECT REFERENCE NO.	SHEET NO.
17BP.2.R.86	2C-2

DOCUMENT NOT CONSIDERED FINAL UNLESS ALL SIGNATURES COMPLETED

STATE OF NORTH CAROLINA
DEPT. OF TRANSPORTATION
DIVISION OF HIGHWAYS
RALEIGH, N.C.

ROADWAY DETAIL DRAWING FOR
GUARDRAIL INSTALLATION

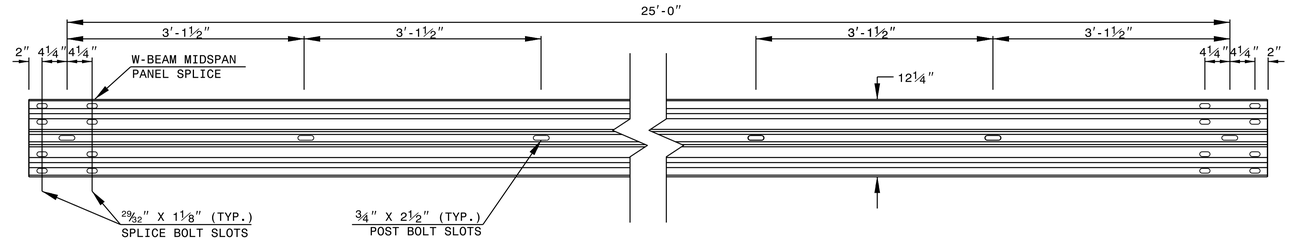

STANDARD W-BEAM GUARDRAIL

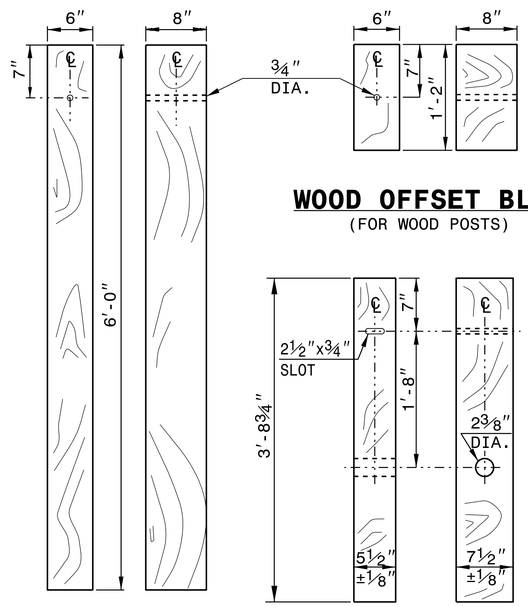

STANDARD LINE POST

WOOD OFFSET BLOCK
(FOR WOOD POSTS)

SHORT WOOD BREAKAWAY POST

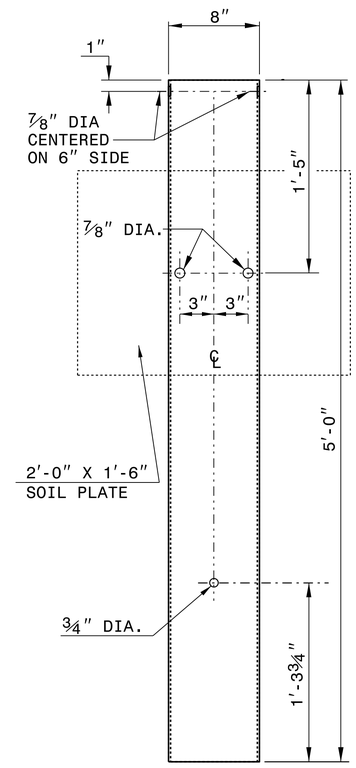

STEEL TUBE
TS 6"x8"x0.1875"

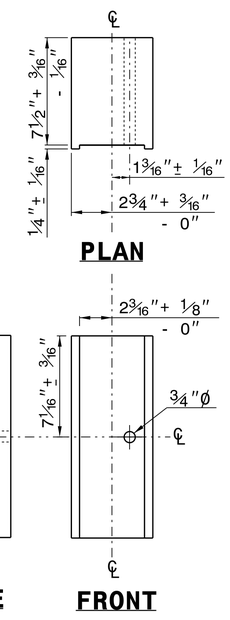

ROUTED OFFSET BLOCK

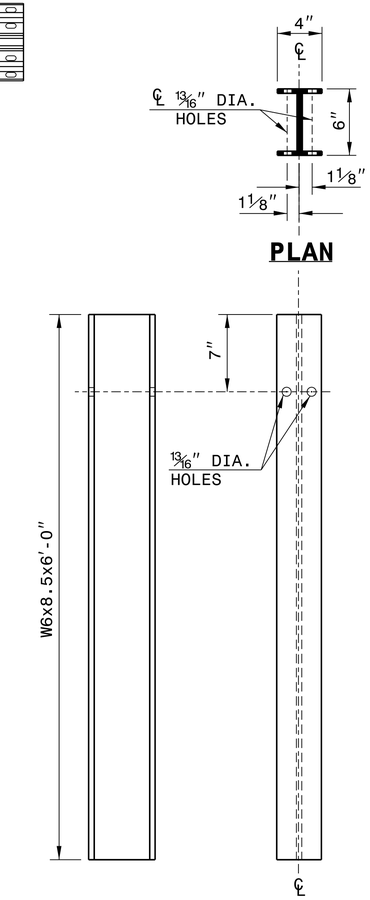

"W6" STEEL POST

SYSTEM PARTS

SHEET 6 OF 8
862D02

STATE OF NORTH CAROLINA
DEPT. OF TRANSPORTATION
DIVISION OF HIGHWAYS
RALEIGH, N.C.

ROADWAY DETAIL DRAWING FOR
GUARDRAIL INSTALLATION

SHEET 6 OF 8
862D02

NORTH CAROLINA PROFESSIONAL SEAL 022966 ENGINEER JOHN L. HOWERTON
DocuSigned by: 873F3D17DC0C4BF...
4/24/2019

CONTRACTS STANDARDS AND DEVELOPMENT UNIT
Office 919-707-6950 FAX 919-250-4119

SEE TITLE BLOCK

ORIGINAL BY: J.HOWERTON DATE: 3-7-2018
MODIFIED BY: DATE:
CHECKED BY: DATE:
FILE SPEC.:

DocuSign Envelope ID: 4F59BEEC-B433-44DB-AB93-7613CB514F02

PROJECT REFERENCE NO.	SHEET NO.
17BP.2.R.86	2C-3

STATE OF
NORTH CAROLINA
DEPT. OF TRANSPORTATION
DIVISION OF HIGHWAYS
RALEIGH, N.C.

ROADWAY DETAIL DRAWING FOR
GUARDRAIL INSTALLATION

SHEET OF

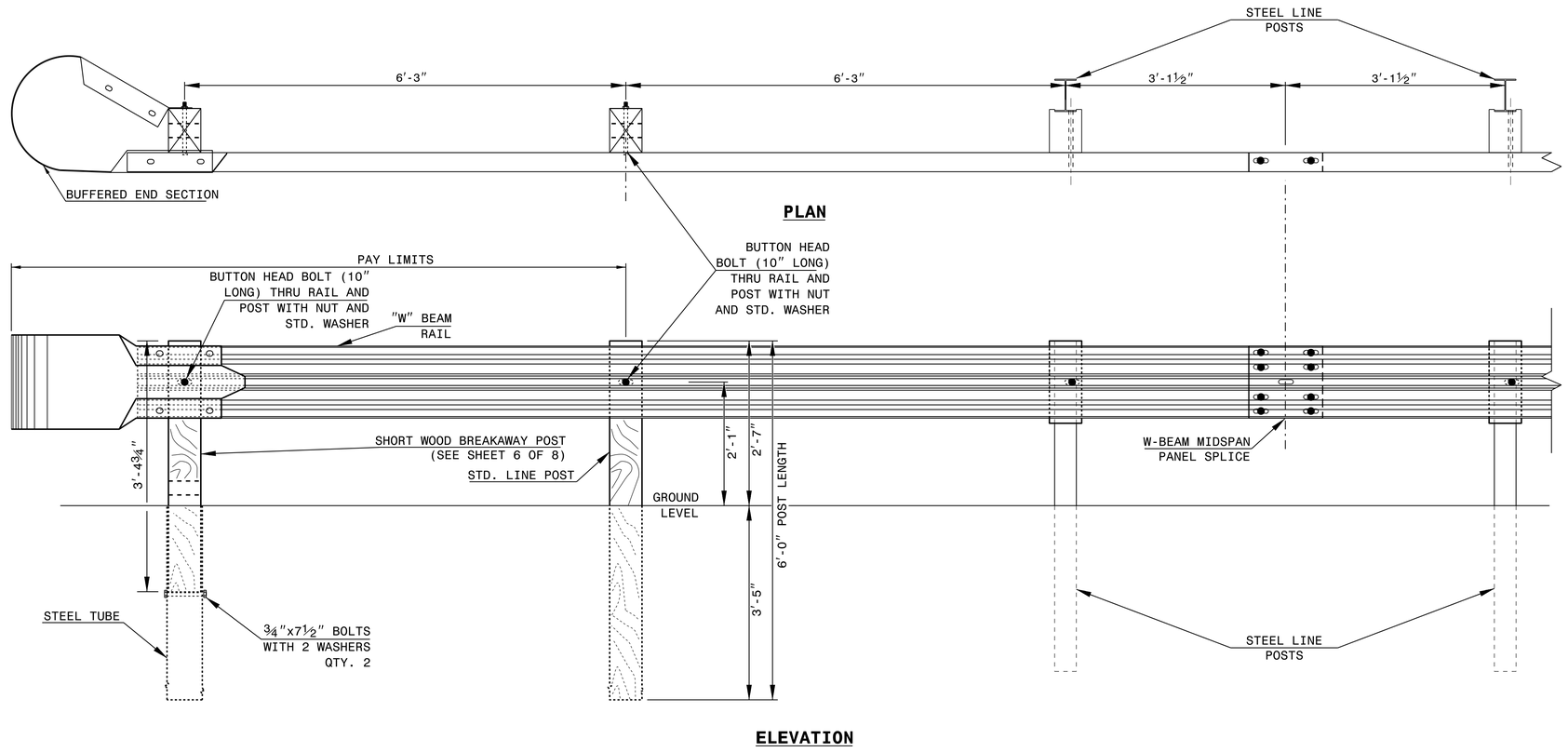

TRAILING END UNIT ASSEMBLY

A.T.-1 SYSTEM

STATE OF
NORTH CAROLINA
DEPT. OF TRANSPORTATION
DIVISION OF HIGHWAYS
RALEIGH, N.C.

ROADWAY DETAIL DRAWING FOR
GUARDRAIL INSTALLATION

SHEET OF

NORTH CAROLINA PROFESSIONAL SEAL 022966 ENGINEER DAVID A. HOWERTON
57BF3D17DCDC45F...
4/24/2019

DOCUMENT NOT CONSIDERED FINAL UNLESS ALL SIGNATURES COMPLETED

CONTRACTS STANDARDS AND DEVELOPMENT UNIT
Office 919-707-6950 FAX 919-250-4119

A.T.-1 SYSTEM

ORIGINAL BY: _____ DATE: _____
MODIFIED BY: _____ DATE: _____
CHECKED BY: _____ DATE: _____
FILE SPEC.: _____

COMPUTED BY: TATYANA GIBBS DATE: 12/13/18
CHECKED BY: ROY H. TELLIER DATE: 4/8/19

STATE OF NORTH CAROLINA
DIVISION OF HIGHWAYS

PROJECT REFERENCE NO.	SHEET NO.
17BP.2.R.86	3B–1

SUMMARY OF EARTHWORK

STATION	STATION	UNCL. EXCAV.	EMBANK. +25%	BORROW	WASTE
–L– STA 12+00	–L– STA 16+72.25 (BRIDGE)	275	76		199
–L– 17+99.75 (BRIDGE)	–L– STA 26+50	1225	71		1,154
		6	158	152	
		34	293	249	
		11	81	94	
TOTALS:		1,551	703	505	1,353
WASTE IN LIEU OF BORROW				–505	–505
PROJECT TOTALS:		1,542	703		848
GRAND TOTALS:		1,551	703		856
SAY:		1,600			900

Note: Approximate quantities only. Unclassified Excavation, Borrow Excavation, Fine Grading, Clearing and Grubbing, and Removal of Existing Pavement will be paid for at the contract lump sum price for "Grading."

Earthwork quantities are calculated by the Roadway Design Unit. These earthwork quantities are based in part on subsurface data provided by the Geotechnical Engineering Unit.

"N" = DISTANCE FROM EDGE OF LANE TO FACE OF GUARDRAIL.
TOTAL SHOULDER WIDTH = DISTANCE FROM EDGE OF TRAVEL LANE TO SHOULDER BREAK POINT.
FLARE LENGTH = DISTANCE FROM LAST SECTION OF PARALLEL GUARDRAIL TO END OF GUARDRAIL.
W = TOTAL WIDTH OF FLARE FROM BEGINNING OF TAPER TO END OF GUARDRAIL.
G = GATING IMPACT ATTENUATOR TYPE 350
NG = NON-GATING IMPACT ATTENUATOR TYPE 350

PAVEMENT REMOVAL SUMMARY

SURVEY LINE	STATION	STATION	LOCATION LT/RT/CL	YD^2
–L–	11+50.00	16+83 +/–	CL	1227.00
	17+93 +/–	26+50.00	CL	1932.11
			TOTAL:	3159.11
			SAY:	3200

SHOULDER BERM GUTTER SUMMARY

SURVEY LINE	STATION	STATION	LENGTH (FT)
–L–, RT	18+10.62	18+97.28	81.38
–L–, LT	18+10.62	18+27.24	11.87
–DRV3–, RT	10+99.88	11+21.39	32.42
		TOTAL:	125.67
		SAY:	130

ROW AREA DATA SUMMARY

PARCEL NO.	PROPERTY OWNERS NAMES	PROP. R/W	PERM. UTILITY EASE.	PERM. DRAIN. EASE.	PERM. DRAINAGE UTILITY EASE.	CONST. EASE.
1	SAMUEL L FYLE JR		625 SF			7587.54 SF
2	NORMAN JEROL SELBY JR		6075.75 SF			8873.84 SF
3	ARIE JR & JANET M DEHOOG		4268.45 SF		375 SF	2900.07 SF
4	NATHANIEL AUSTIN GLADDING IV		540.15 SF		1854.32 SF	8852.19 SF
5	WENDY W COOPER					1230.26 SF

GUARDRAIL SUMMARY

SURVEY LINE	BEG. STA.	END STA.	LOCATION	LENGTH STRAIGHT	LENGTH SHOP CURVED	LENGTH DOUBLE FACED	WARRANT POINT APPROACH END	WARRANT POINT TRAILING END	"N" DIST. FROM E.O.L.	TOTAL SHOUL. WIDTH	FLARE LENGTH APPROACH END	FLARE LENGTH TRAILING END	W APPROACH END	W TRAILING END	ANCHORS TYPE III	ANCHORS GREU TL–2	ANCHORS AT–1	IMPACT ATTENUATOR 350 EA	IMPACT ATTENUATOR 350 G	IMPACT ATTENUATOR 350 NG	SINGLE FACED GUARDRAIL	REMOVE EXISTING GUARDRAIL	REMOVE AND STOCKPILE EXISTING GUARDRAIL	REMARKS
–DRV2–	10+95.26		LT		78.01′				2′	5′							1							
–L–		16+72.25 (BRIDGE)	RT	33.75′			16+72.25 (BRIDGE)		5.42′	9′					1									
–DRV1–	10+73.04		LT		50.54′				2′	5′							1							
–L–		16+72.25 (BRIDGE)	LT	18.75′			16+72.25 (BRIDGE)		5.42′	9′					1									
–L–	17+99.75 (BRIDGE)		LT	18.75′					5.42′	9′					1									
–DRV3–		10+71.67	RT		50.82′				2′	5′							1							
–L–	17+99.75 (BRIDGE)	19+26.23	RT	118.50′					5.42′	9′					1	1								
			SUBTOTAL:	189.75′	179.37′										4	1	3							
			ANCHOR DEDUCTIONS:																					
			GREU, TL–2: 1@25′	–25.00′																				
			TYPE III: 4@18.75′	–75.00																				
			AT–2: 3@6.25′	–18.75																				
			TOTAL:	71′	179.37′										4	1	3							
			SAY:	75′	180′										4	1	3							
			5 ADDITIONAL POSTS																					

LIST OF PIPES, ENDWALLS, ETC. (FOR PIPES 48" & UNDER)

| STATION | LOCATION (LT,RT, OR CL) | STRUCTURE NO. FROM | STRUCTURE NO. TO | TOP ELEVATION | INVERT ELEVATION | INVERT ELEVATION | SLOPE CRITICAL | CAAP 12" | CAAP 15" | CAAP 18" | CAAP 24" .064 | CAAP 24" .079 | CAAP 30" .109 | CAAP 36" | CAAP 42" | CAAP 48" | BITUMINOUS COATED C.S. PIPE TYPE B (UNLESS NOTED OTHERWISE) 12" .064 | 15" .064 | 18" .064 | 24" .064 | 24" .079 | 30" .079 | 36" .079 | 42" .109 | 48" .109 | CLASS IV R.C. PIPE 12" | 15" | 18" | 24" | 30" | 36" | 42" | 48" | 15" SIDE DRAIN PIPE | 18" SIDE DRAIN PIPE | 24" SIDE DRAIN PIPE | ENDWALLS STD. 838.01, STD. 838.11 OR STD. 838.80 (UNLESS NOTED OTHERWISE) CU. YDS. R.C.P. | ENDWALLS CU. YDS. C.S.P. | QUANTITIES FOR DRAINAGE STRUCTURES * TOTAL L.F. FOR PAY QUANTITY SHALL BE COL. "A" + 1.3 X COL. "B" PER EACH (0' THRU 5.0') | LIN. FT. 5.0' THRU 10.0' A | LIN. FT. 10.0' AND ABOVE B | C.B. STD. 840.01 OR STD. 840.02 | FRAME, GRATES AND HOOD STANDARD 840.03 TYPE OF GRATE E | TYPE OF GRATE F | TYPE OF GRATE G | D.I. STD. 840.14 OR STD. 840.15 | D.I. FRAME & GRATE STD. 840.16 | G.D.I. TYPE "A" STD. 840.17 OR 840.26 | G.D.I. TYPE "B" STD. 840.18 OR 840.27 | G.D.I. TYPE "D" STD. 840.19 OR 840.28 | G.D.I. FRAME WITH GRATE STD. 840.22 | G.D.I. FRAME WITH TWO GRATES STD. 840.22 | G.D.I. (N.S.) FRAME WITH GRATE STD. 840.24 | G.D.I. (N.S.) FRAME WITH TWO GRATES STD. 840.24 | J.B. STD. 840.31 OR 840.32 | TB GRATED D.I., TYPE "B" STD. 840.35 | T.B.D.I. (N.S.) FRAME AND TWO GRATES STD. 840.29 | CORR. STEEL ELBOWS NO. & SIZE | CONC. COLLARS CL. "B" C.Y. STD 840.72 | CONC. & BRICK PIPE PLUG, C.Y. STD. 840.71 | PIPE REMOVAL LIN.FT. | REMARKS |
|---|---|---|---|---|---|---|---|---|---|---|---|---|---|---|---|---|---|---

COMPUTED BY: Tyler C. Bottoms DATE: 1/9/2019	(5-15-18)	PROJECT NO.	SHEET NO.
CHECKED BY: _____ DATE: _____		17BP.2.R.86	3G-1

STATE OF NORTH CAROLINA
DIVISION OF HIGHWAYS

SUMMARY OF SUBSURFACE DRAINAGE

LINE	Station	Station	Location LT/RT/CL	Drain Type* UD/BD/SD	LF
CONTINGENCY				SD	200
				TOTAL LF:	200

*UD = Underdrain
*BD = Blind Drain
*SD = Subsurface Drain

SUMMARY OF GEOTEXTILE FOR PAVEMENT STABILIZATION

LINE	Station	Station	Geotextile for Pavement Stabilization SY	Class IV Subgrade Stabilization TONS
CONTINGENCY				
		TOTAL SY/TONS:	0	0*

*Total tons of "Class IV Subgrade Stabilization" is only the estimated quantity for pavement stabilization and may only represent a portion of the subgrade stabilization quantity shown in the Item Sheets of the Proposal.

SUMMARY OF AGGREGATE SUBGRADE/STABILIZATION

LINE	Station	Station	Aggregate Type* ASU(1/2)/ AST	Aggregate Thickness INCHES [8" for ASU(2)]	Shallow Undercut CY	Class IV Subgrade Stabilization TONS	Geotextile for Soil Stabilization SY	Stabilizer Aggregate TONS	Class IV Aggregate Stabilization TONS
CONTINGENCY									
			TOTAL CY/TONS/SY:		0	0**	0**	0	0

*ASU(1/2) = Aggregate Subgrade (Type 1 or 2)
*AST = Aggregate Stabilization
**Total tons of "Class IV Subgrade Stabilization" and total square yards of "Geotextile for Soil Stabilization" are only the estimated quantities for ASU(1/2)/AST and may only represent a portion of the subgrade stabilization and geotextile quantities shown in the Item Sheets of the Proposal.

SUMMARY OF ROCK PLATING

LINE	Beginning Slope (H:V)	Approx. Station	Ending Slope (H:V)	Approx. Station	Location LT/RT	Rock Plating Detail No. 1/2/3/4	Riprap Class* 1/2/B	Rock Plating SY
							TOTAL SY:	0

*Use Class 1, 2 or B riprap if riprap class is not shown for rock plating location.

SUMMARY OF REINFORCED SOIL SLOPES AND SLOPE EROSION CONTROL

LINE	Beginning Slope/ RSS (H:V)	Approx. Station	Ending Slope/ RSS (H:V)	Approx. Station	Location LT/RT	Reinforced Soil Slope (RSS) SY	Geocells SY	Coir Fiber Mat SY	Matting for Erosion Control SY
					TOTAL SY:	0	0	0*	0**

*Total square yards of "Coir Fiber Mat" is only the estimated quantity for slopes steeper than 2:1 (H:V) and may only represent a portion of the coir fiber mat quantity shown in the Item Sheets of the Proposal.
**Total square yards of "Matting for Erosion Control" is only the estimated quantity for RSS and may only represent a portion of the matting quantity shown in the Item Sheets of the Proposal.

SUMMARY OF PRE-SPLITTING OF ROCK

LINE	Beginning Rock Cut Slope (H:V)	Approx. Station	Ending Rock Cut Slope (H:V)	Approx. Station	Location LT/RT	Pre-splitting of Rock SY
					TOTAL SY:	0

SUMMARY OF SURCHARGES AND SURCHARGE WAITING PERIODS

LINE	Station	Station	Surcharge Height FT	MONTHS

SUMMARY OF SETTLEMENT GAUGES

Gauge No.	LINE and Station	Offset	
		Distance FT	Direction LT/RT
	TOTAL GAUGES (EACH):		

SUMMARY OF EMBANKMENT WAITING PERIODS

LINE	Station	Station	MONTHS

SUMMARY OF BRIDGE WAITING PERIODS

Bridge Description	End Bent/ Bent No.	MONTHS

DocuSign Envelope ID: EE695FE6-1227-48D5-8A6E-51F1F1DE45A5

HNTB NORTH CAROLINA, P.C.
343 E. Six Forks Road, Suite 200
Raleigh, North Carolina 27609
NC License No: C-1554

PROJECT REFERENCE NO.	SHEET NO.
17BP.2.R.86	4
R/W SHEET NO.	

ROADWAY DESIGN ENGINEER: NORTH CAROLINA PROFESSIONAL SEAL 044575 — Docusigned by: TODD A. PELLIER, III — 4/24/2019

HYDRAULICS ENGINEER: NORTH CAROLINA PROFESSIONAL SEAL 15764 — Docusigned by: JAMES A. BYRD — 4/26/2019

DOCUMENT NOT CONSIDERED FINAL UNLESS ALL SIGNATURES COMPLETED

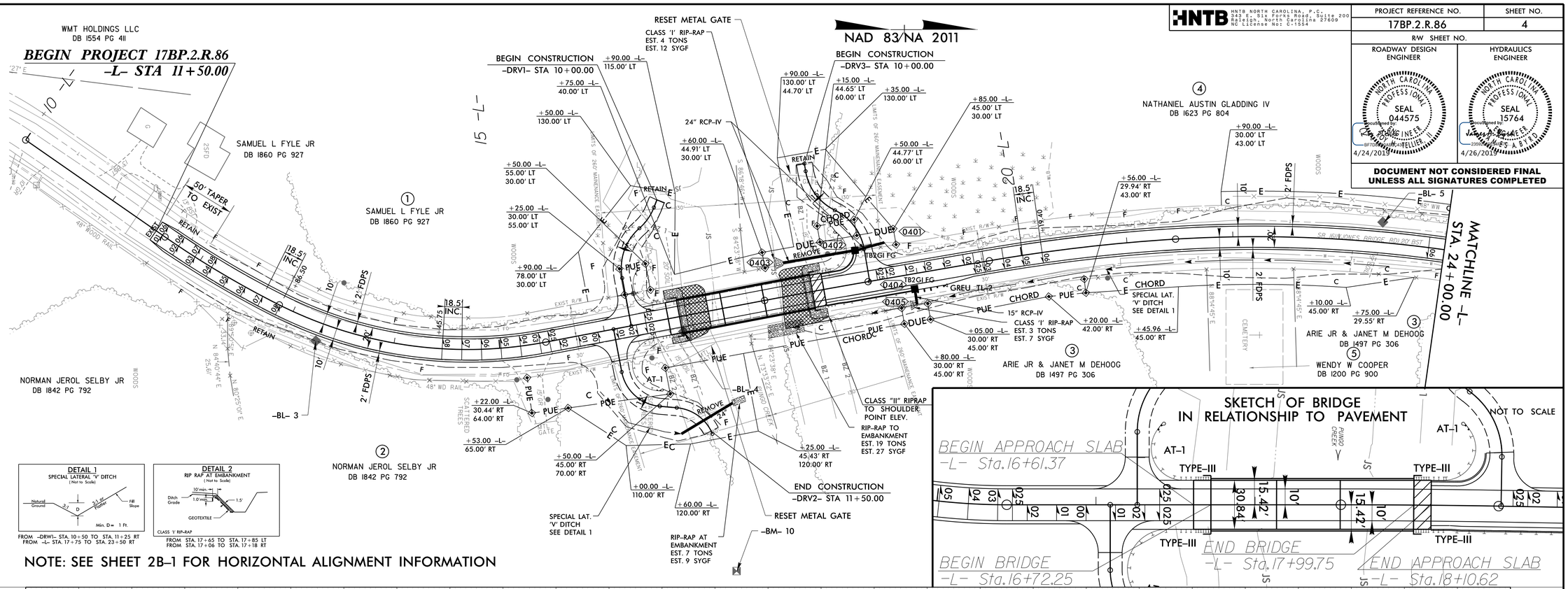

REVISIONS

8/17/99

15-APR-2019 07:06
Z:\Projects\17BP.2.R.86_RDY_PSH4.dgn
HNTB

DocuSign Envelope ID: EE695FE6-1227-48D5-8A6E-51F1F1DE45A5

8/17/99

REVISIONS

HNTB NORTH CAROLINA, P.C.
343 E. Six Forks Road, Suite 200
Raleigh, North Carolina 27609
NC License No: C-1554

PROJECT REFERENCE NO.	SHEET NO.
17BP.2.R.86	5
R/W SHEET NO.	

ROADWAY DESIGN ENGINEER	HYDRAULICS ENGINEER
NORTH CAROLINA PROFESSIONAL SEAL 044575 ENGINEER TODD M. CANTELLIER, II	NORTH CAROLINA PROFESSIONAL SEAL 15764 ENGINEER JAMES A. BYRD
DocuSigned by: 8FT0D4F8A7A4E0... 4/24/2019	DocuSigned by: 4/26/2019

DOCUMENT NOT CONSIDERED FINAL UNLESS ALL SIGNATURES COMPLETED

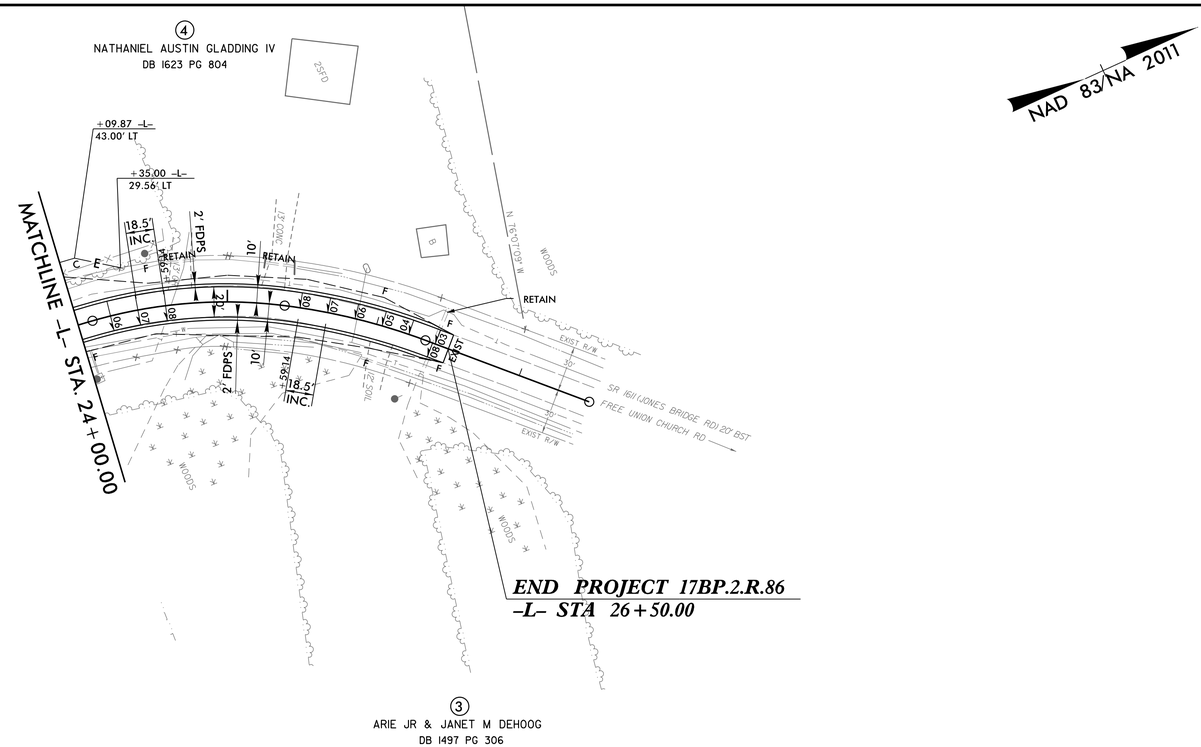

NOTE: SEE SHEET 2B-1 FOR HORIZONTAL ALIGNMENT INFORMATION

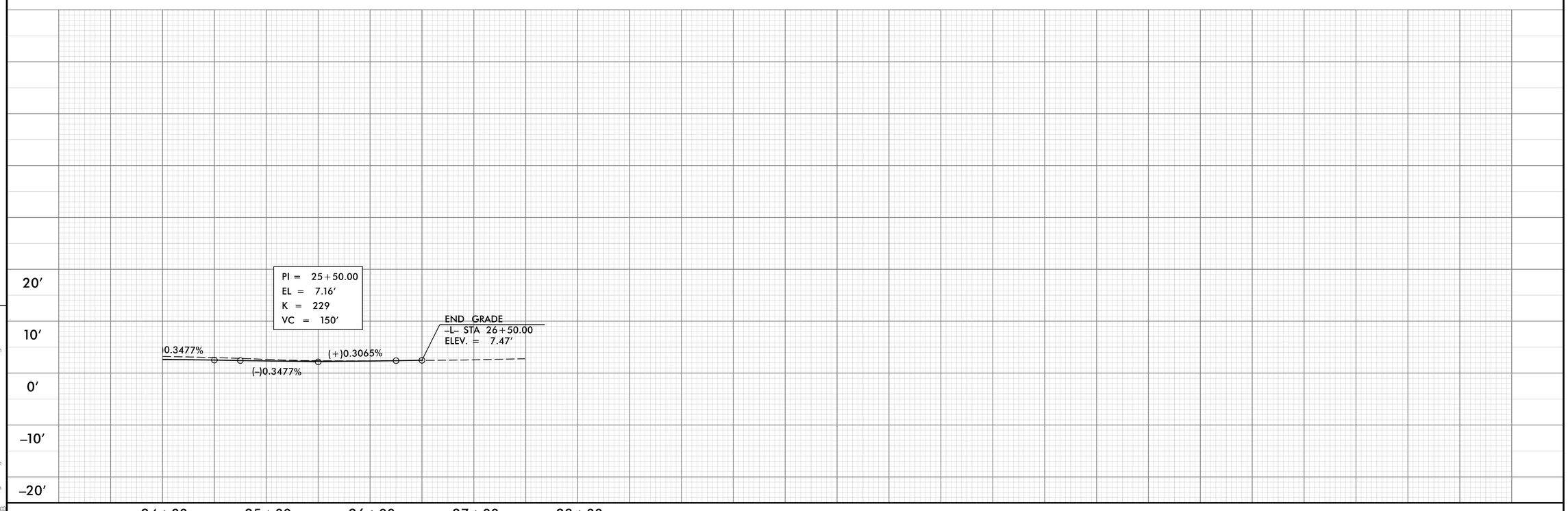

15-APR-2019 07:06
V:\Projects\17BP.2.R.86_RDY_PSH5.dgn
HNTB

DocuSign Envelope ID: EE695FE6-1227-48D5-8A6E-51F1F1DE45A5

8/17/99

HNTB
HNTB NORTH CAROLINA, P.C.
343 E. Six Forks Road, Suite 200
Raleigh, North Carolina 27609
NC License No: C-1554

PROJECT REFERENCE NO.	SHEET NO.
17BP.2.R.86	6
R/W SHEET NO.	

ROADWAY DESIGN ENGINEER

NORTH CAROLINA PROFESSIONAL SEAL 044575 ENGINEER TOM TELLIER III

DocuSigned by: Tom Tellier III
8F1D8C9B1F7E4E0...
4/24/2019

HYDRAULICS ENGINEER

NORTH CAROLINA PROFESSIONAL SEAL 15764 ENGINEER JAMES A BYRD

DocuSigned by: James A Byrd
2D0B0A0A0A0A0A0...
4/26/2019

DOCUMENT NOT CONSIDERED FINAL UNLESS ALL SIGNATURES COMPLETED

-DRV1-

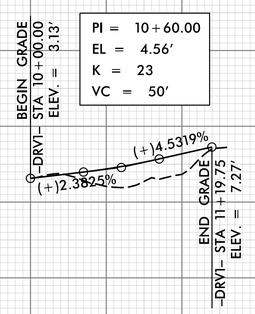

-DRV2-

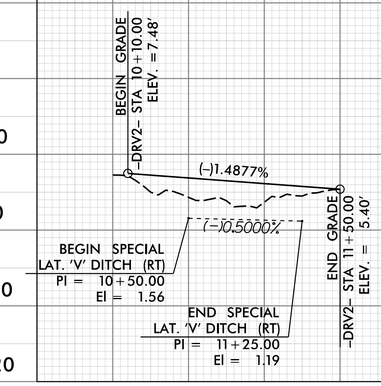

DITCH LEGEND	
RIGHT DITCH	- - - - - - - - - - - - - - -

-DRV3-

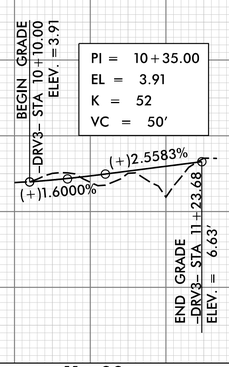

THIS SPACE IS INTENTIONALLY LEFT BLANK

DocuSign Envelope ID: AA51CFB2-D71A-433A-BFCC-EEAF37421AD4

STATE OF NORTH CAROLINA
DIVISION OF HIGHWAYS

TRANSPORTATION MANAGEMENT PLAN

BEAUFORT COUNTY

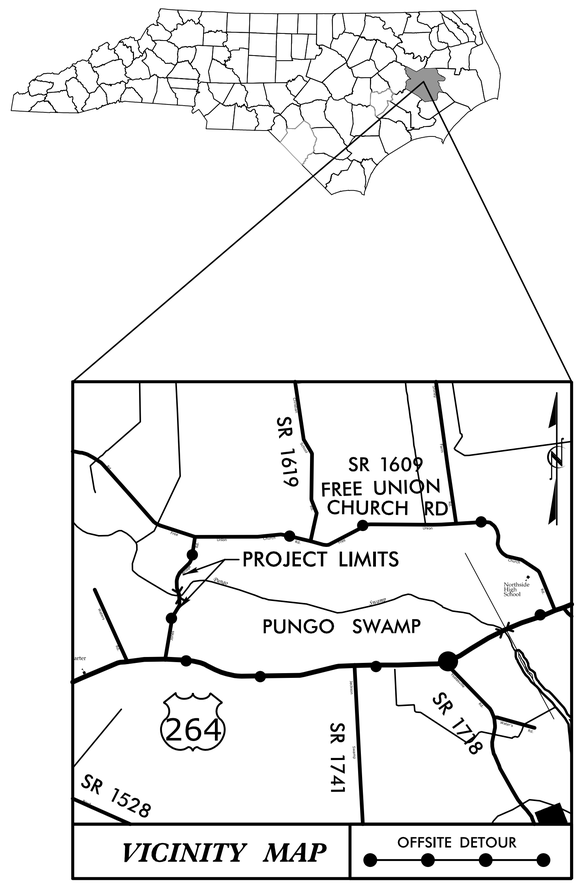

LOCATION: REPLACE BRIDGE NO. 159 OVER PUNGO SWAMP

PLANS PREPARED BY: HNTB	*NCDOT CONTACTS:*	
R.B. EARLY, P.E. *PROJECT ENGINEER*	S. J. HAMILTON, PE, CPM *DIVISION TRAFFIC ENGINEER*	
J. A. PHILLIPS *PROJECT DESIGN TECHNICIAN*		

INDEX OF SHEETS

SHEET NO.	TITLE
TMP-1	TITLE SHEET, VICINITY MAP, INDEX OF SHEETS AND GENERAL NOTES
TMP-2	OFF SITE DETOUR AND DETAIL

GENERAL NOTES

IMPLEMENT TRAFFIC CONTROL IN ACCORDANCE WITH THE ROADWAY STANDARD DRAWINGS LISTED ON TMP-1

CHANGES MAY BE REQUIRED WHEN PHYSICAL DIMENSIONS IN THE DETAIL DRAWINGS, STANDARD DETAILS AND ROADWAY DETAILS ARE NOT ATTAINABLE TO MEET FIELD CONDITIONS OR RESULT IN THE DUPLICATE OR UNDESIRED OVERLAPPING OF DEVICES. MODIFICATIONS MAY INCLUDE: MOVING, SUPPLEMENTING, COVERING, OR REMOVAL OF DEVICES AS DIRECTED BY THE ENGINEER.

STATE FORCES WILL INSTALL AND MAINTAIN THE PROJECT DETOUR AND TYPE III BARRICADES AT THE PROJECT LIMITS. STATE FORCES WILL INSTALL MARKINGS AND MARKERS ON THE FINISHED PROJECT. CONTACT JEFF DUNNING AT 252-830-3493 TWO WEEKS PRIOR TO CLOSING THE ROAD FOR DETOUR INSTALLATION.

GRADE AND SUPERELEVATION REVISIONS REQUIRE A TOTAL REPLACEMENT OF THE ROADWAY IN AREAS. COORDINATE WITH PROPERTY OWNERS CONCERNING ACCESS TO DRIVES DURING CONSTRUCTION. PROVIDE ACCESS USING INCIDENTAL STONE AND FLAGGERS AS NEEDED.

DOCUMENT NOT CONSIDERED FINAL UNLESS ALL SIGNATURES COMPLETED

HNTB

HNTB NORTH CAROLINA, P.C.
343 E. Six Forks Road, Ste 200
Raleigh, North Carolina 27609
NC License No: C-1554

APPROVED: DocuSigned by: Rhonda B. Early
DATE: 4/25/2019 26BF46A...

SEAL

NORTH CAROLINA PROFESSIONAL SEAL 023521 ENGINEER RHONDA B. EARLY

SHEET NO.
TMP–1

17BP.2.R.86

TIP PROJECT:

4/24/2019
...\17BP.2.R.86_tc_TMP-01_title.dgn
HNTB

DocuSign Envelope ID: AA51CFB2-D71A-433A-BFCC-EEAF37421AD4

PROJ. REFERENCE NO.	SHEET NO.
17BP.2.R.86	TMP-2

Ⓐ R11-2
48″ x 30″

TYPE III BARRICADE

Ⓑ R11-4
60″ x 30″

M4-10R
48″ x 18″

TYPE III BARRICADE

Ⓒ R11-4
60″ x 30″

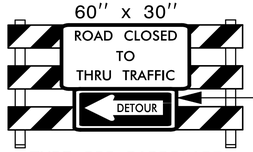

M4-10L
48″ x 18″

TYPE III BARRICADE

Ⓓ R11-4
60″ x 30″

TYPE III BARRICADE

① DETOUR M4-8 24″ X 12″

M6-1 21″ X 15″

② DETOUR M4-8 24″ X 12″

M6-3 21″ X 15″

③ DETOUR M4-8 24″ X 12″

M6-1 L 21″ X 15″

④ END DETOUR M4-8 A 24″ X 18″

REFER TO RSD 1101.03,
(SHEET 1 OF 9) FOR ADDITINAL
SIGN REQUIREMENTS
INCLUDING:
W20-3 (16 EA)
SP-4 (4 EA)

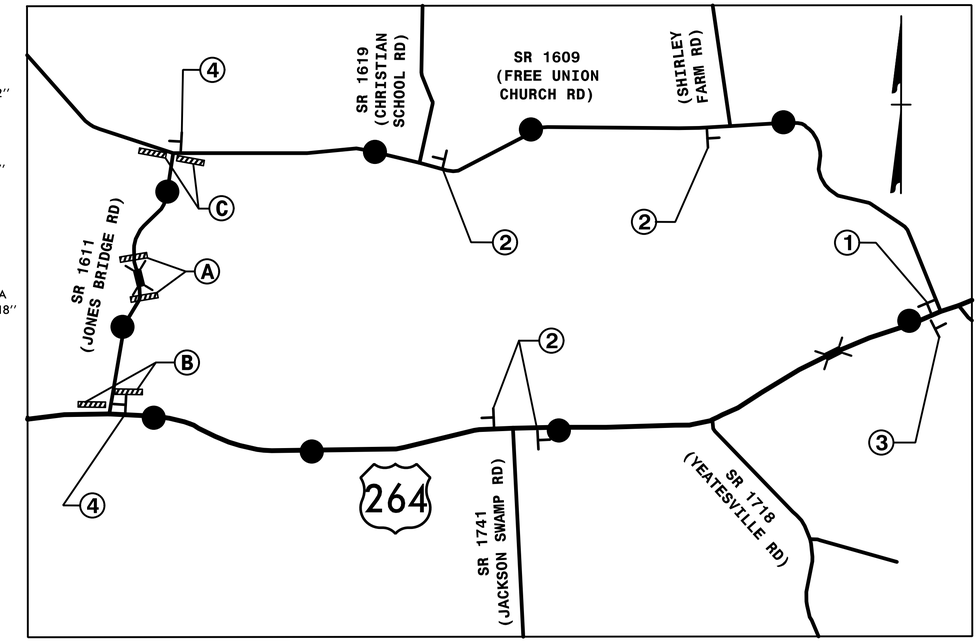

MAINTAIN ACCESS TO DRIVE THROUGH
CONSTRUCTION AREA USING INCIDENTAL
STONE AND FLAGGERS AS NEEDED.

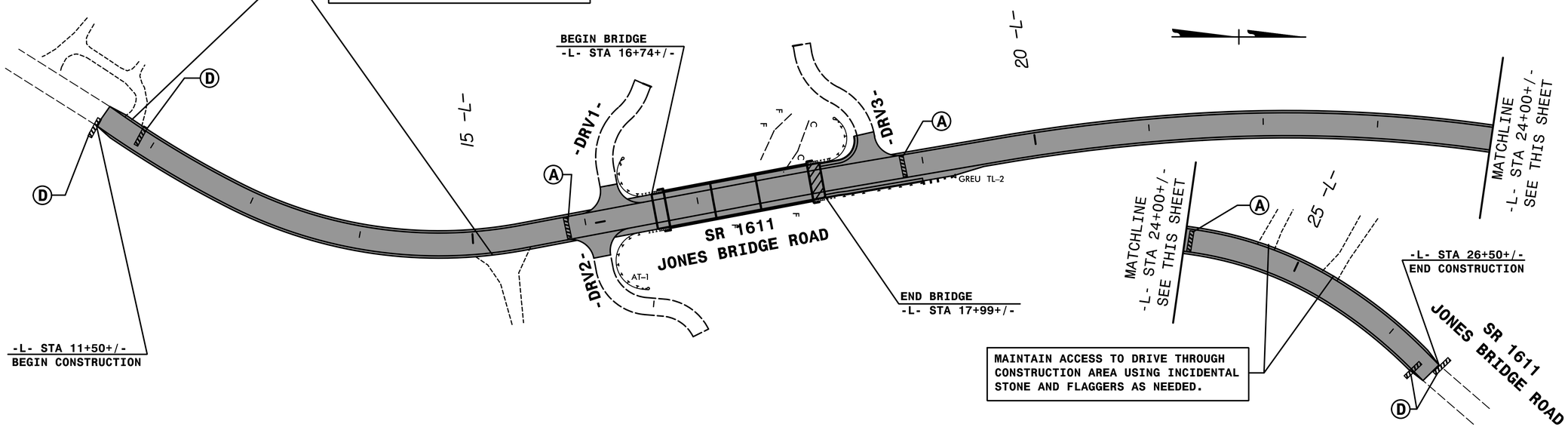

MAINTAIN ACCESS TO DRIVE THROUGH
CONSTRUCTION AREA USING INCIDENTAL
STONE AND FLAGGERS AS NEEDED.

DOCUMENT NOT CONSIDERED FINAL
UNLESS ALL SIGNATURES COMPLETED

APPROVED: Rhonda B. Early
F34CAF5AC6BF48A...
DATE: 4/25/2019

NORTH CAROLINA PROFESSIONAL SEAL 023521 ENGINEER RHONDA B. EARLY
SEAL

STATE OF NORTH CAROLINA DEPARTMENT OF TRANSPORTATION

HNTB
HNTB NORTH CAROLINA, P.C.
343 E. Six Forks Road, Suite 200
Raleigh, North Carolina 27609
NC License No: C-1554

TRANSPORTATION
MANAGEMENT PLAN

GENERAL NOTES AND DETOUR

4/24/2019
-\17BP.2.R.86_tc_TMP-02_detour.dgn
HNTB

TIP PROJECT: 17BP.2.R.86

STATE	STATE PROJECT REFERENCE NO.	SHEET NO.	TOTAL SHEETS
N.C.	17BP.2.R.86	EC-1	

STATE PROJ. NO.	F.A. PROJ. NO.	DESCRIPTION

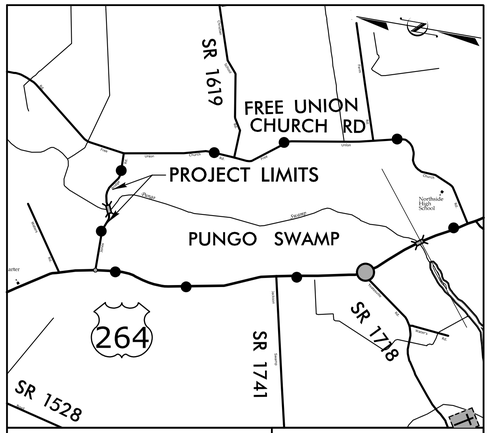

VICINITY MAP | OFFSITE DETOUR

STATE OF NORTH CAROLINA
DIVISION OF HIGHWAYS

PLAN FOR PROPOSED
HIGHWAY EROSION CONTROL

BEAUFORT COUNTY

LOCATION: REPLACE BRIDGE NO. 159 OVER PUNGO SWAMP

TYPE OF WORK: GRADING, DRAINAGE, PAVING AND STRUCTURE

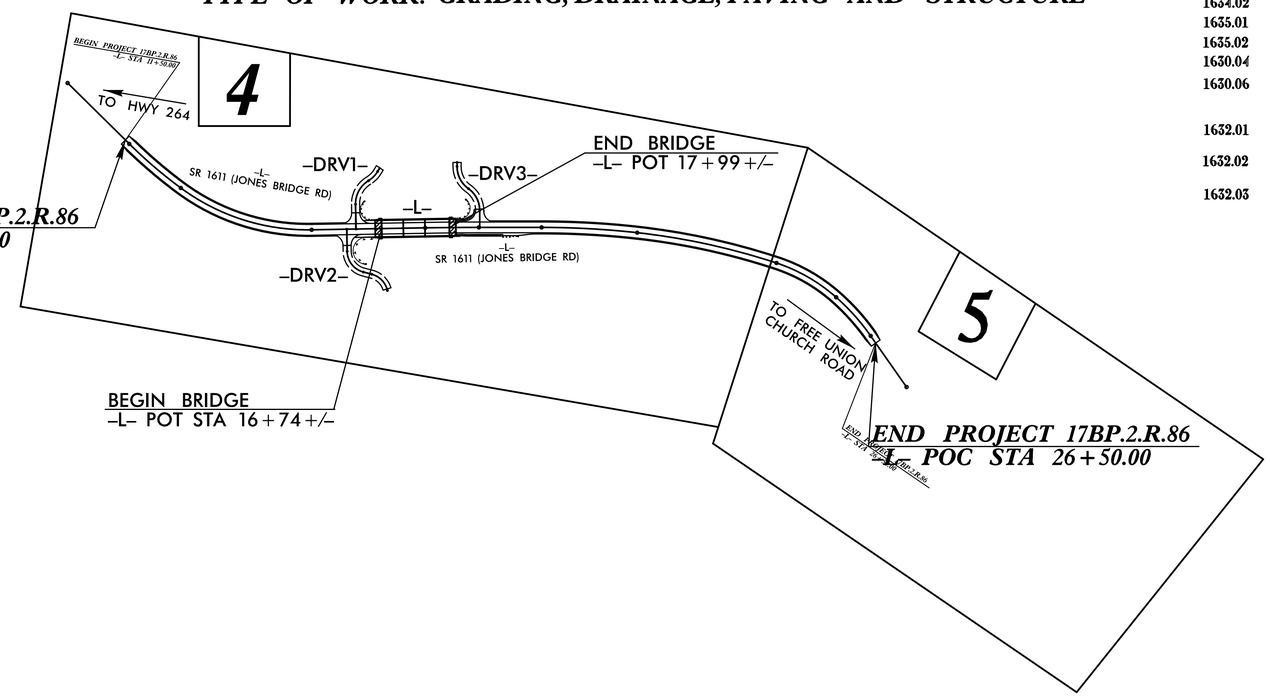

EROSION AND SEDIMENT CONTROL MEASURES

Std. #	Description	Symbol
1630.03	Temporary Silt Ditch	TSD
1630.05	Temporary Diversion	TD
1605.01	Temporary Silt Fence	
1606.01	Special Sediment Control Fence	
1622.01	Temporary Berms and Slope Drains	
1630.02	Silt Basin Type B	
1633.01	Temporary Rock Silt Check Type-A	
	Temporary Rock Silt Check Type-A with Matting and Polyacrylamide (PAM)	
1633.02	Temporary Rock Silt Check Type-B	
	Wattle/Coir Fiber Wattle	EW CW
	Wattle/Coir Fiber Wattle with Polyacrylamide (PAM)	
1634.01	Temporary Rock Sediment Dam Type-A	
1634.02	Temporary Rock Sediment Dam Type-B	
1635.01	Rock Pipe Inlet Sediment Trap Type-A	
1635.02	Rock Pipe Inlet Sediment Trap Type-B	
1630.04	Stilling Basin	
1630.06	Special Stilling Basin	
	Rock Inlet Sediment Trap:	
1632.01	Type A	A
1632.02	Type B	B
1632.03	Type C	C
	Skimmer Basin	
	Tiered Skimmer Basin	
	Infiltration Basin	

ENVIRONMENTALLY SENSITIVE AREA(S) EXIST ON THIS PROJECT

Refer To E. C. Special Provisions for Special Considerations.

THIS PROJECT HAS BEEN DESIGNED TO SENSITIVE WATERSHED STANDARDS.

GRAPHIC SCALE

0
PLANS

0
PROFILE (HORIZONTAL)

0
PROFILE (VERTICAL)

THESE EROSION AND SEDIMENT CONTROL PLANS COMPLY WITH THE REGULATIONS SET FORTH BY THE NCG-010000 GENERAL CONSTRUCTION PERMIT EFFECTIVE AUGUST 1, 2016 AND ISSUED BY THE NORTH CAROLINA DEPARTMENT OF ENVIRONMENT QUALITY DIVISION OF WATER RESOURCES.

Prepared In the Office of:

HNTB NORTH CAROLINA, P.C.
343 E. Six Forks Road, Suite 200
Raleigh, North Carolina 27609
NC License No: C-1554

Designed by:

NATALIE CHAN, P.E. — NAME
3444 — LEVEL III CERTIFICATION NO.

Reviewed In the Office of:

ROADSIDE ENVIRONMENTAL UNIT
1 South Wilmington St.
Raleigh, NC 27611

2018 STANDARD SPECIFICATIONS

Reviewed by:

ANDY BLANKENSHIP, P.E.

Roadway Standard Drawings

The following roadway english standards as appear in "Roadway Standard Drawings"- Roadway Design Unit - N. C. Department of Transportation - Raleigh, N. C., dated January 2018 and the latest revison thereto are applicable to this project and by reference hereby are considered a part of these plans.

1604.01	Railroad Erosion Control Detail	1632.01	Rock Inlet Sediment Trap Type A
1605.01	Temporary Silt Fence	1632.02	Rock Inlet Sediment Trap Type B
1606.01	Special Sediment Control Fence	1632.03	Rock Inlet Sediment Trap Type C
1607.01	Gravel Construction Entrance	1633.01	Temporary Rock Silt Check Type A
1622.01	Temporary Berms and Slope Drains	1633.02	Temporary Rock Silt Check Type B
1630.01	Riser Basin	1634.01	Temporary Rock Sediment Dam Type A
1630.02	Silt Basin Type B	1634.02	Temporary Rock Sediment Dam Type B
1630.03	Temporary Silt Ditch	1635.01	Rock Pipe Inlet Sediment Trap Type A
1630.04	Stilling Basin	1635.02	Rock Pipe Inlet Sediment Trap Type B
1630.05	Temporary Diversion	1640.01	Coir Fiber Baffle
1630.06	Special Stilling Basin	1645.01	Temporary Stream Crossing
1631.01	Matting Installation		

2/18/2019
...\Design\17BP.2.R.86_EC_TSH.dgn
PWTB

PROJECT REFERENCE NO.	SHEET NO.
17BP.2.R.86	EC-2
R/W SHEET NO.	
ROADWAY DESIGN ENGINEER	HYDRAULICS ENGINEER

COIR FIBER WATTLE WITH POLYACRYLAMIDE (PAM) DETAIL

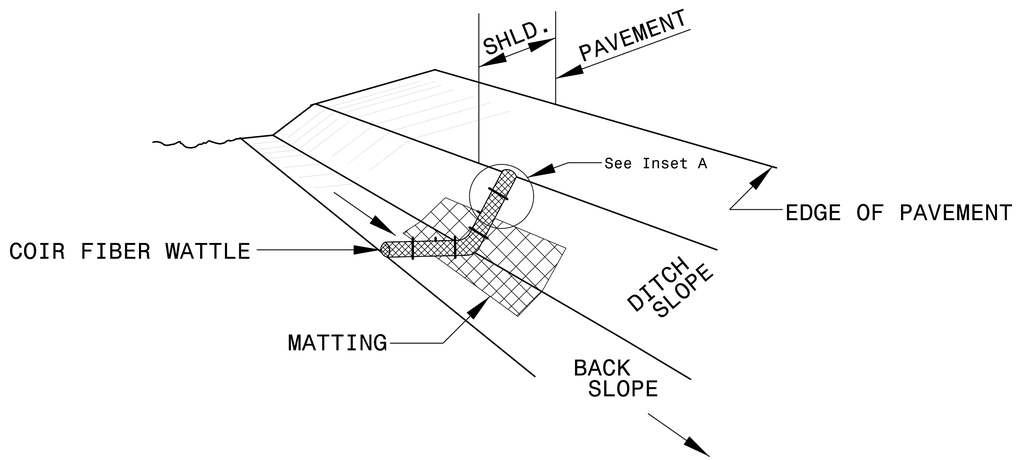

ISOMETRIC VIEW

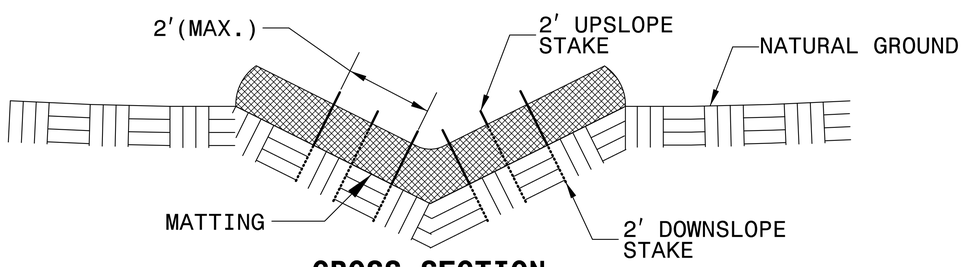

CROSS SECTION VEE DITCH

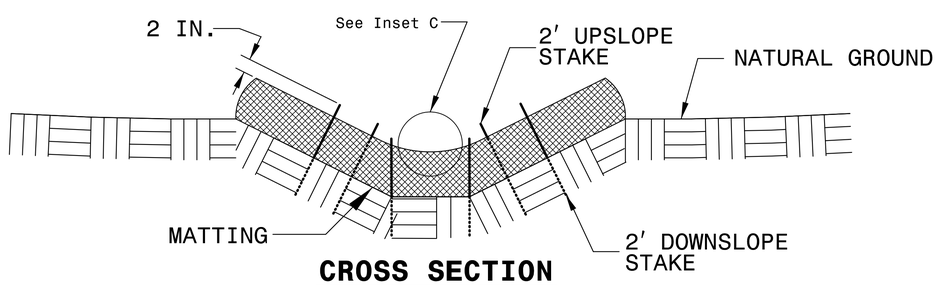

CROSS SECTION TRAPEZOIDAL DITCH

NOTES:

USE MINIMUM 12 IN. DIAMETER COIR FIBER (COCONUT FIBER) WATTLE.

USE 2 FT. WOODEN STAKES WITH A 2 IN. BY 2 IN. NOMINAL CROSS SECTION.

ONLY INSTALL WATTLE(S) TO A HEIGHT IN DITCH SO FLOW WILL NOT WASH AROUND WATTLE AND SCOUR DITCH SLOPES AND AS DIRECTED.

INSTALL A MINIMUM OF 2 UPSLOPE STAKES AND 4 DOWNSLOPE STAKES AT AN ANGLE TO WEDGE WATTLE TO BOTTOM OF DITCH.

PROVIDE STAPLES MADE OF 0.125 IN. DIAMETER STEEL WIRE FORMED INTO A U SHAPE NOT LESS THAN 12" IN LENGTH.

INSTALL STAPLES APPROXIMATELY EVERY 1 LINEAR FOOT ON BOTH SIDES OF WATTLE AND AT EACH END TO SECURE IT TO THE SOIL.

INSTALL MATTING IN ACCORDANCE WITH SECTION 1631 OF THE STANDARD SPECIFICATIONS.

PRIOR TO POLYACRYLAMIDE (PAM) APPLICATION, OBTAIN A SOIL SAMPLE FROM PROJECT LOCATION, AND FROM OFFSITE MATERIAL, AND ANALYZE FOR APPROPRIATE PAM FLOCCULANT TO BE APPLIED TO EACH WATTLE.

INITIALLY APPLY 2 OUNCES OF ANIONIC OR NEUTRALLY CHARGED PAM OVER WATTLE WHERE WATER WILL FLOW AND 1 OUNCE OF PAM ON MATTING ON EACH SIDE OF WATTLE. REAPPLY PAM AFTER EVERY RAINFALL EVENT THAT IS EQUAL TO OR EXCEEDS 0.50 IN.

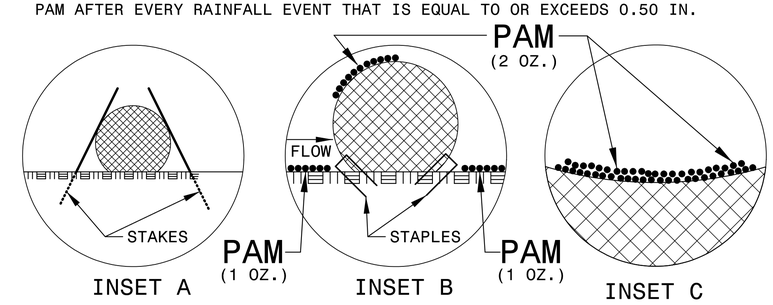

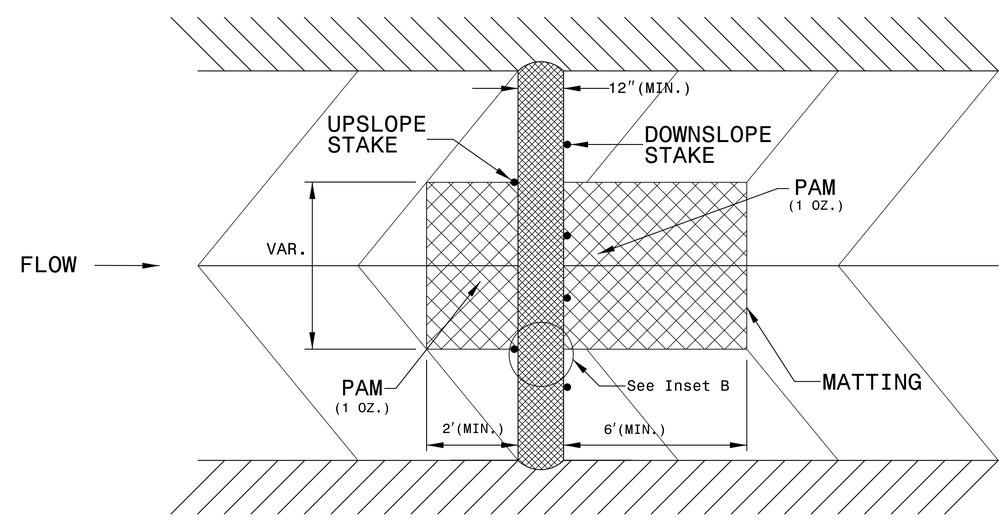

TOP VIEW

PROJECT REFERENCE NO.	SHEET NO.
17BP.2.R.86	EC-2A
R/W SHEET NO.	
ROADWAY DESIGN ENGINEER	HYDRAULICS ENGINEER

SILT FENCE COIR FIBER WATTLE BREAK DETAIL

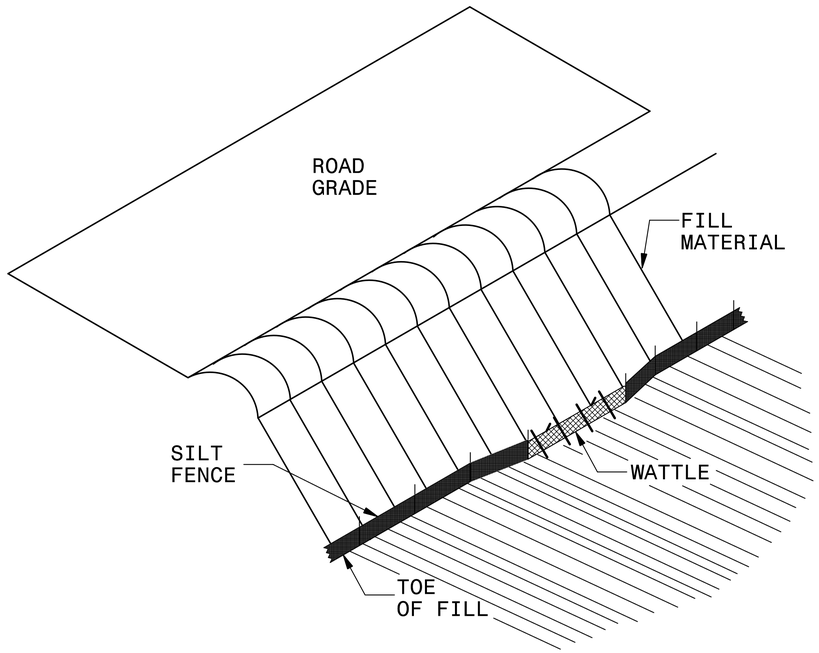

ISOMETRIC VIEW

NOTES:

USE MINIMUM 12 IN. DIAMETER COIR FIBER (COCONUT FIBER) WATTLE AND LENGTH OF 10 FT.

EXCAVATE A 1 TO 2 INCH TRENCH FOR WATTLE TO BE PLACED.

DO NOT PLACE WATTLE ON TOE OF SLOPE.

USE 2 FT. WOODEN STAKES WITH A 2 IN. BY 2 IN. NOMINAL CROSS SECTION.

INSTALL A MINIMUM OF 2 UPSLOPE STAKES AND 4 DOWNSLOPE STAKES AT AN ANGLE TO WEDGE WATTLE TO GROUND.

PROVIDE STAPLES MADE OF 0.125 IN. DIAMETER STEEL WIRE FORMED INTO A U SHAPE NOT LESS THAN 12″ IN LENGTH.

INSTALL STAPLES APPROXIMATELY EVERY 1 LINEAR FOOT ON BOTH SIDES OF WATTLE AND AT EACH END TO SECURE IT TO THE SOIL.

WATTLE INSTALLATION CAN BE ON OUTSIDE OF THE SILT FENCE AS DIRECTED.

INSTALL TEMPORARY SILT FENCE IN ACCORDANCE WITH SECTION 1605 OF THE STANDARD SPECIFICATIONS.

INSET A

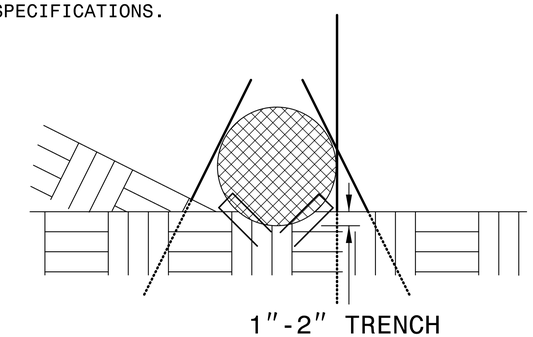

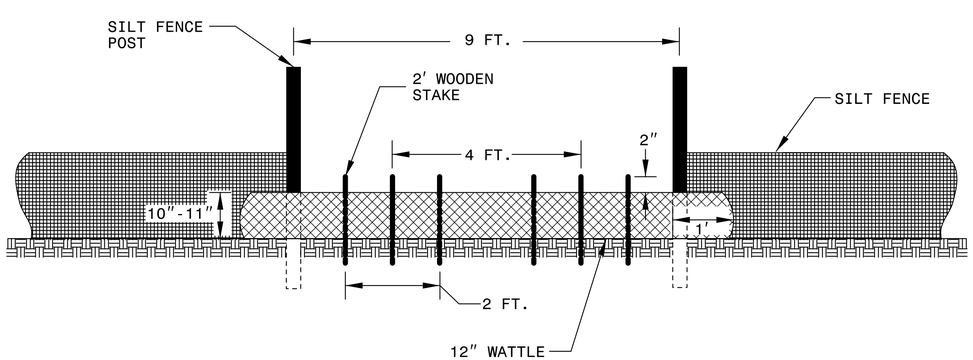

VIEW FROM SLOPE

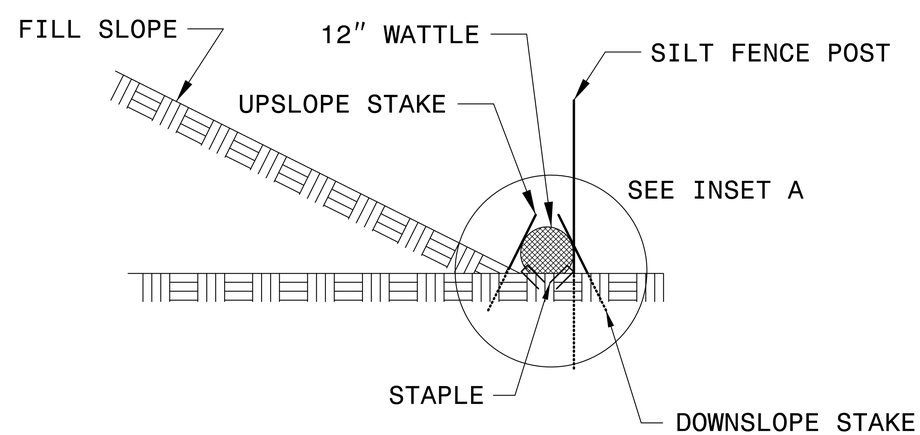

SIDE VIEW

PROJECT REFERENCE NO.	SHEET NO.
17BP.2.R.86	EC-2B
R/W SHEET NO.	
ROADWAY DESIGN ENGINEER	HYDRAULICS ENGINEER

COIR FIBER WATTLE BARRIER DETAIL

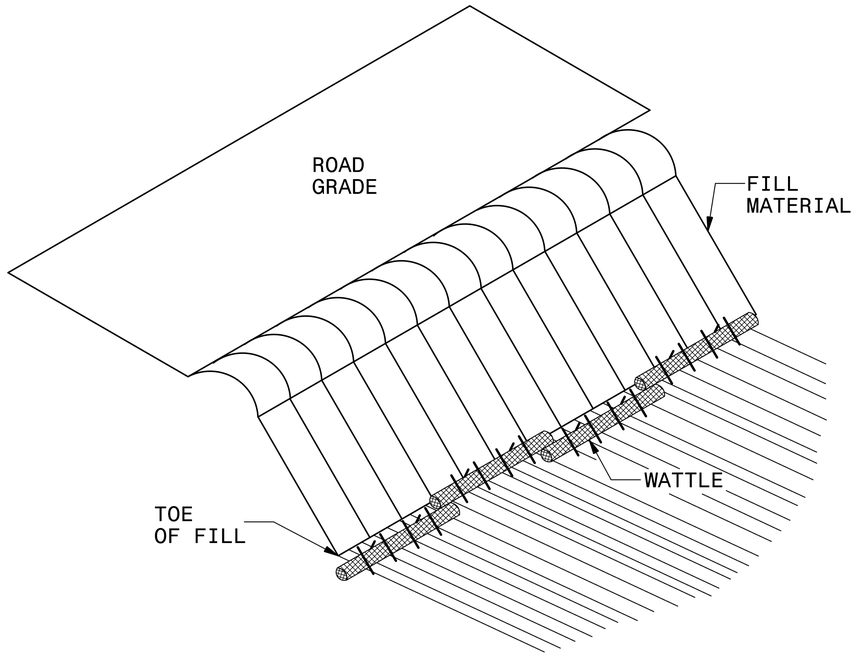

ISOMETRIC VIEW

NOTES:

USE MINIMUM 18 IN. NOMINAL DIAMETER COIR FIBER (COCONUT) WATTLE AND LENGTH OF 10 FT.

EXCAVATE A 2 TO 3 INCH TRENCH FOR WATTLE TO BE PLACED.

DO NOT PLACE WATTLES ON TOE OF SLOPE.

USE 2 FT. WOODEN STAKES WITH A 2 IN. BY 2 IN. NOMINAL CROSS SECTION.

INSTALL A MINIMUM OF 2 UPSLOPE STAKES AND 4 DOWNSLOPE STAKES AT AN ANGLE TO WEDGE WATTLE TO GROUND.

PROVIDE STAPLES MADE OF 0.125 IN. DIAMETER STEEL WIRE FORMED INTO A U SHAPE NOT LESS THAN 12″ IN LENGTH.

INSTALL STAPLES APPROXIMATELY EVERY 1 LINEAR FOOT ON BOTH SIDES OF WATTLE AND AT EACH END TO SECURE IT TO THE SOIL.

FOR BREAKS ALONG LARGE SLOPES, USE MAXIMUM SPACING OF 25 FT.

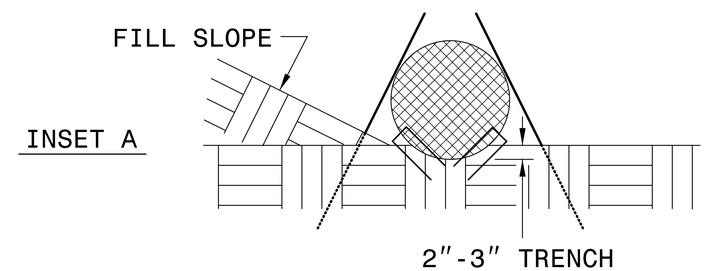

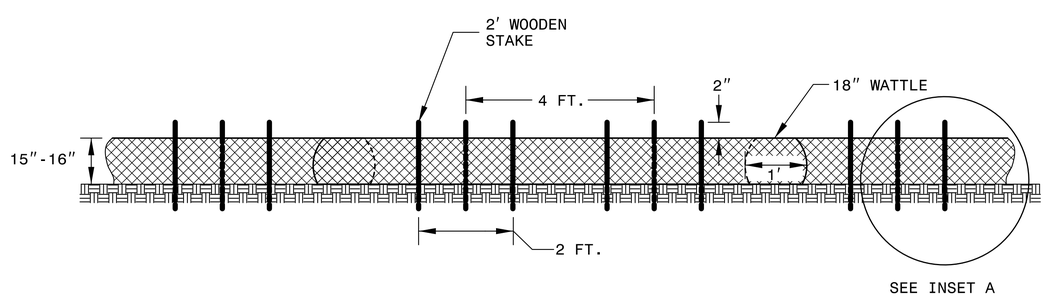

FRONT VIEW

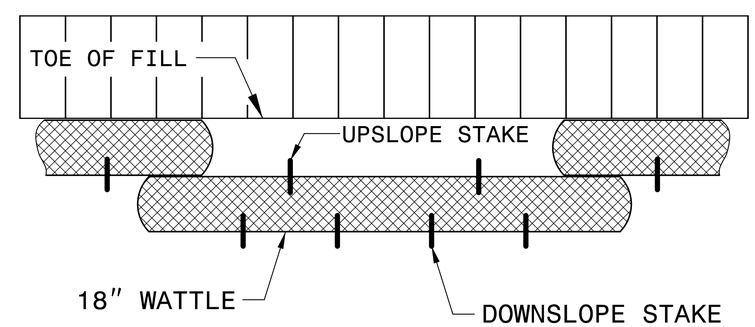

TOP VIEW

PROJECT REFERENCE NO.	SHEET NO.
17BP.2.R.86	EC-2C
R/W SHEET NO.	
ROADWAY DESIGN ENGINEER	HYDRAULICS ENGINEER

TEMPORARY ROCK SILT CHECK TYPE 'A' WITH EXCELSIOR MATTING AND POLYACRYLAMIDE (PAM)

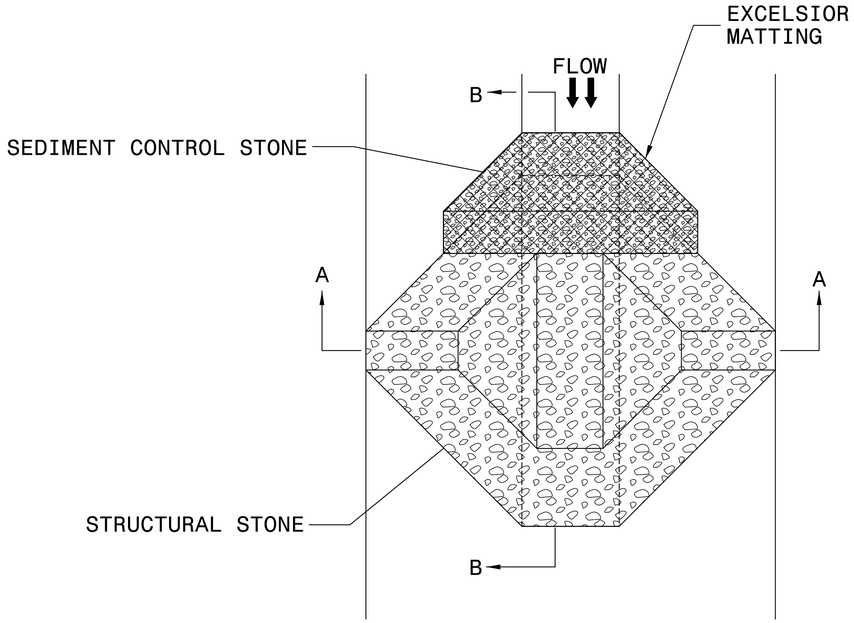

PLAN

NOTES:

INSTALL TEMPORARY ROCK SILT CHECK TYPE A IN ACCORDANCE WITH ROADWAY STANDARD DRAWING NO. 1633.01.

USE EXCELSIOR FOR MATTING MATERIAL AND ANCHOR MATTING SECTION AT TOP AND BOTTOM WITH CLASS B STONE.

PRIOR TO POLYACRYLAMIDE (PAM) APPLICATION, OBTAIN A SOIL SAMPLE FROM PROJECT LOCATION, AND FROM OFFSITE MATERIAL, AND ANALYZE FOR APPROPRIATE PAM FLOCCULANT TO BE APPLIED TO EACH ROCK SILT CHECK.

INITIALLY APPLY 4 OUNCES OF POLYACRYLAMIDE (PAM) TO TOP OF MATTING SECTION AND AFTER EVERY RAINFALL EVENT THAT EQUALS OR EXCEEDS 0.50 INCHES.

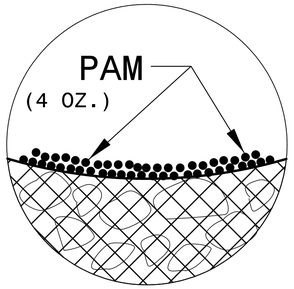

INSET A

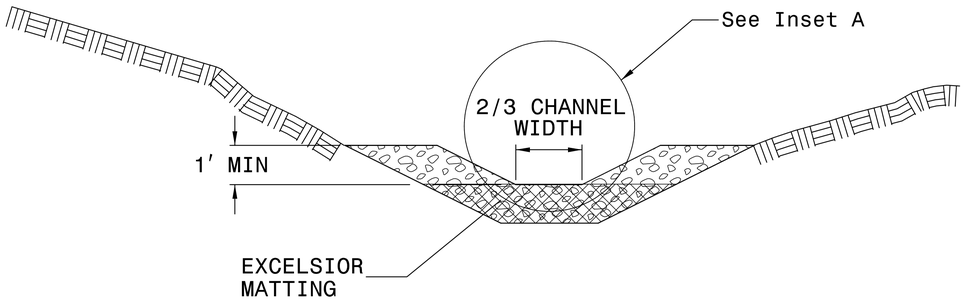

SECTION A-A

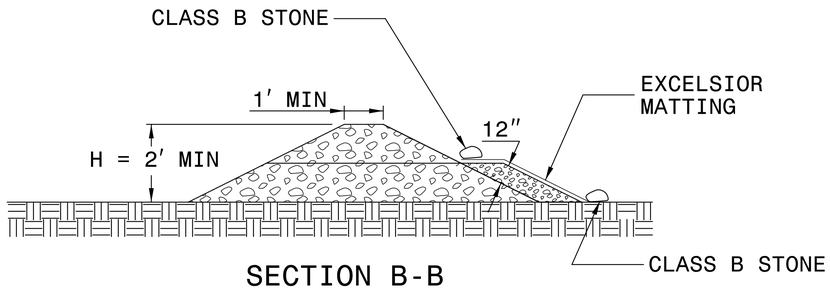

SECTION B-B

PROJECT REFERENCE NO.	SHEET NO.
17BP.2.R.86	EC-3
ROADWAY DESIGN ENGINEER	HYDRAULICS ENGINEER

DIVISION OF HIGHWAYS
STATE OF NORTH CAROLINA

SOIL STABILIZATION TIMEFRAMES

SITE DESCRIPTION	STABILIZATION TIME	TIMEFRAME EXCEPTIONS
PERIMETER DIKES, SWALES, DITCHES AND SLOPES	7 DAYS	NONE
HIGH QUALITY WATER (HQW) ZONES	7 DAYS	NONE
SLOPES STEEPER THAN 3:1	7 DAYS	IF SLOPES ARE 10' OR LESS IN LENGTH AND ARE NOT STEEPER THAN 2:1, 14 DAYS ARE ALLOWED.
SLOPES 3:1 OR FLATTER	14 DAYS	7 DAYS FOR SLOPES GREATER THAN 50' IN LENGTH.
ALL OTHER AREAS WITH SLOPES FLATTER THAN 4:1	14 DAYS	NONE, EXCEPT FOR PERIMETERS AND HQW ZONES.

8/17/99

HNTB NORTH CAROLINA, P.C.
3333 E. Six Forks Road, Suite 200
Raleigh, North Carolina 27609
NC License No: C-1554

PROJECT REFERENCE NO.	SHEET NO.
17BP.2.R.86	EC-4/CONST.4
R/W SHEET NO.	

NATALIE CHAN, P.E.
EROSION CONTROL
LEVEL III
CERTIFICATION #3444

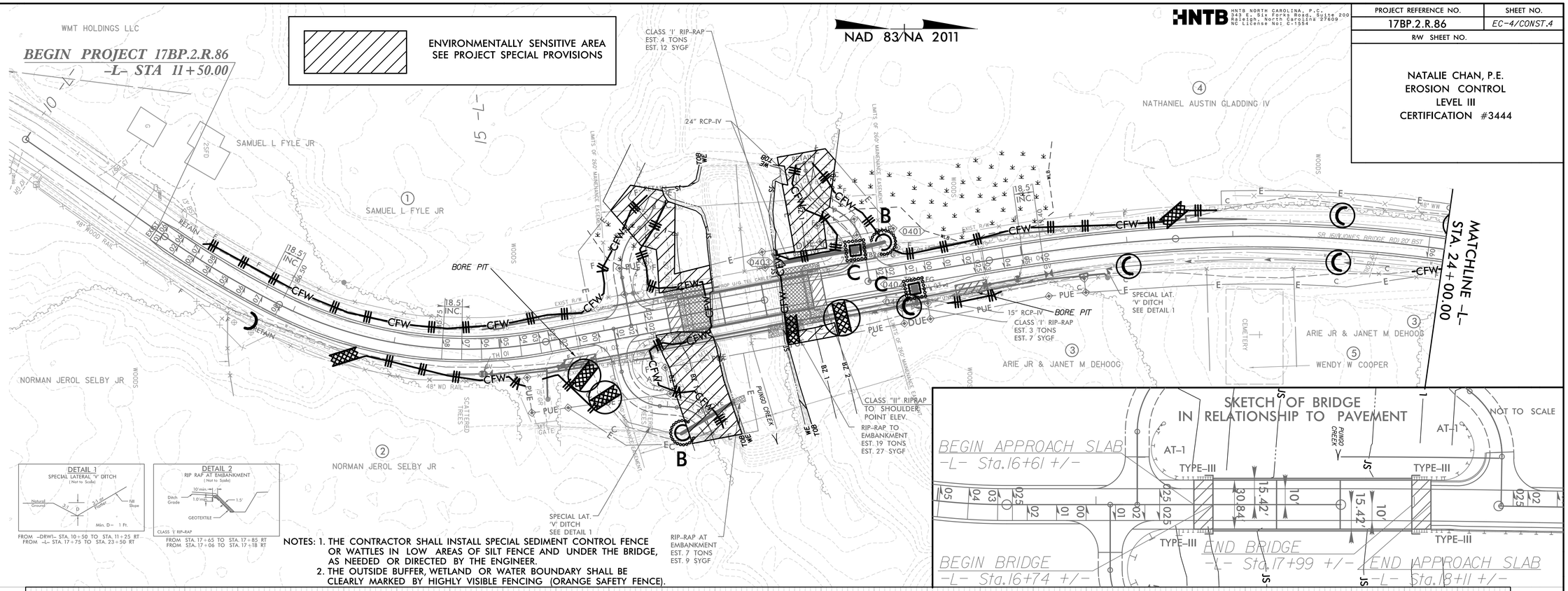

NOTES: 1. THE CONTRACTOR SHALL INSTALL SPECIAL SEDIMENT CONTROL FENCE OR WATTLES IN LOW AREAS OF SILT FENCE AND UNDER THE BRIDGE, AS NEEDED OR DIRECTED BY THE ENGINEER.
2. THE OUTSIDE BUFFER, WETLAND OR WATER BOUNDARY SHALL BE CLEARLY MARKED BY HIGHLY VISIBLE FENCING (ORANGE SAFETY FENCE).

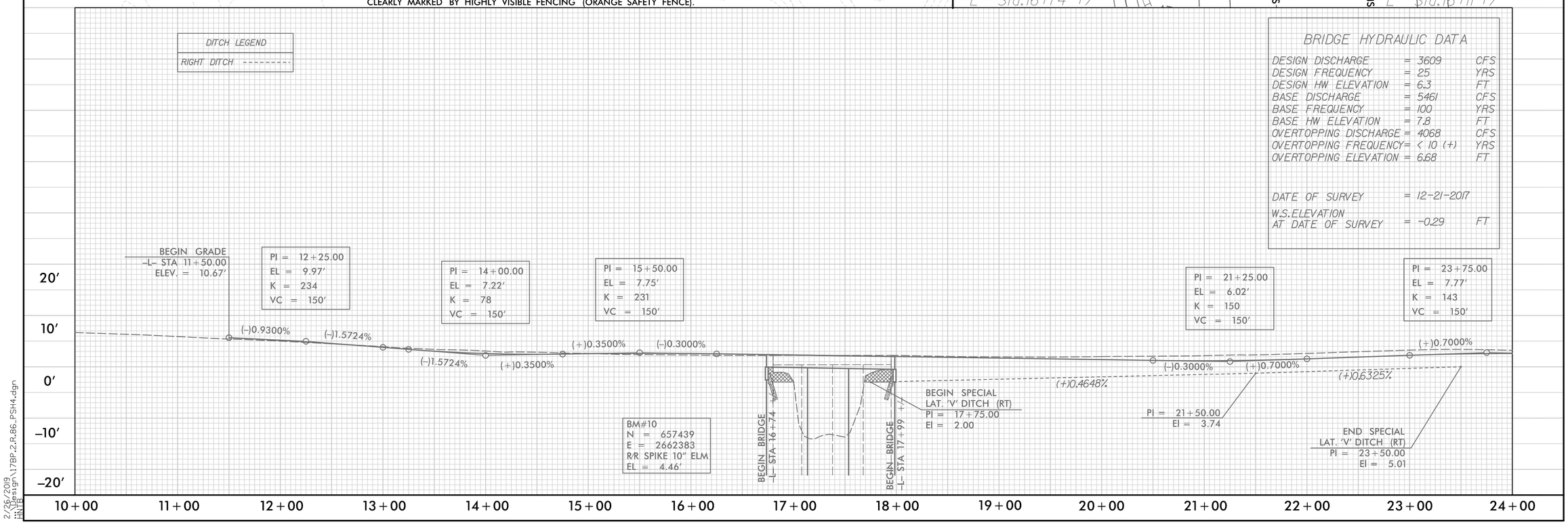

BRIDGE HYDRAULIC DATA

DESIGN DISCHARGE	=	3609	CFS
DESIGN FREQUENCY	=	25	YRS
DESIGN HW ELEVATION	=	6.3	FT
BASE DISCHARGE	=	5461	CFS
BASE FREQUENCY	=	100	YRS
BASE HW ELEVATION	=	7.8	FT
OVERTOPPING DISCHARGE	=	4068	CFS
OVERTOPPING FREQUENCY	=	< 10 (+)	YRS
OVERTOPPING ELEVATION	=	6.68	FT
DATE OF SURVEY	=	12-21-2017	
W.S.ELEVATION AT DATE OF SURVEY	=	-0.29	FT

2/26/2019
HNTB
...\Design\17BP.2.R.86_PSH4.dgn

8/17/99

HNTB NORTH CAROLINA, P.C.
343 E. Six Forks Road, Suite 200
Raleigh, North Carolina 27609
NC License No: C-1554

PROJECT REFERENCE NO.	SHEET NO.
17BP.2.R.86	EC-5/CONST.5
R/W SHEET NO.	

NATALIE CHAN, P.E.
EROSION CONTROL
LEVEL III
CERTIFICATION #3444

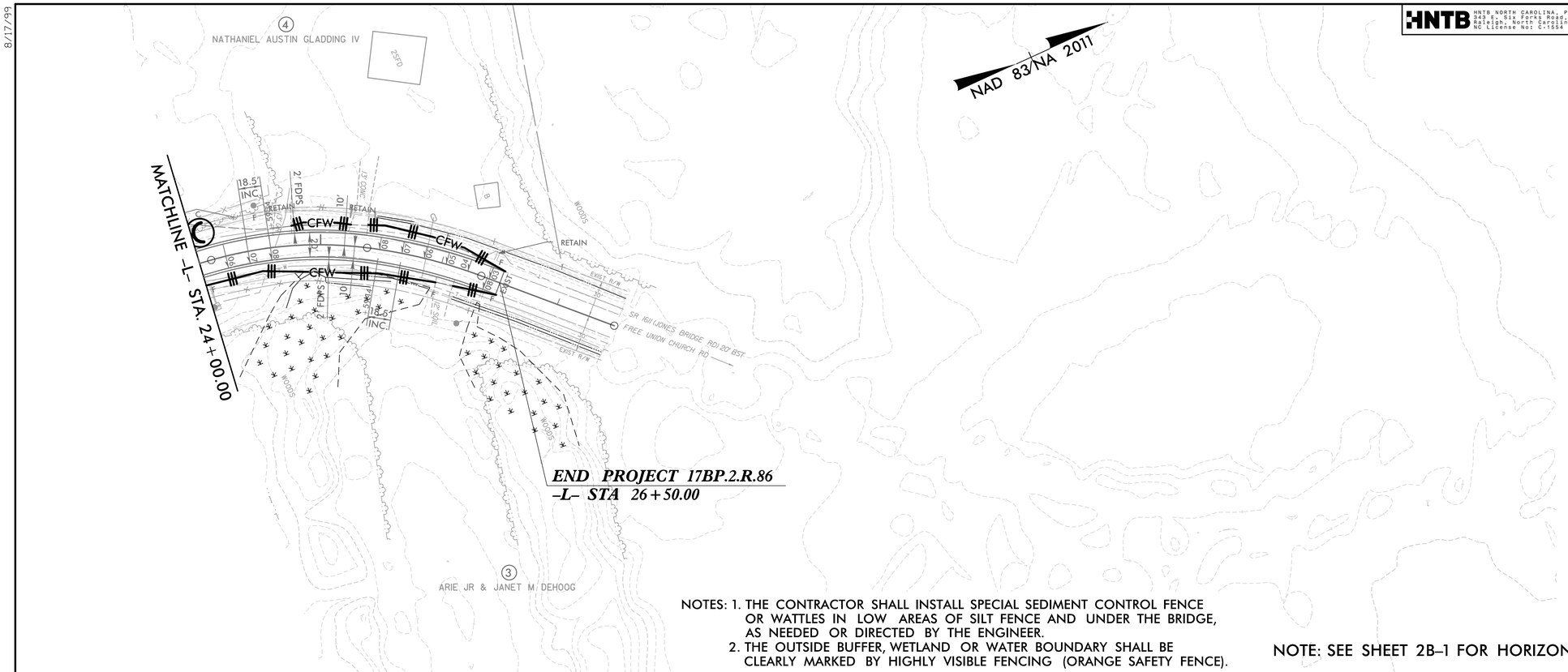

NOTES: 1. THE CONTRACTOR SHALL INSTALL SPECIAL SEDIMENT CONTROL FENCE OR WATTLES IN LOW AREAS OF SILT FENCE AND UNDER THE BRIDGE, AS NEEDED OR DIRECTED BY THE ENGINEER.
2. THE OUTSIDE BUFFER, WETLAND OR WATER BOUNDARY SHALL BE CLEARLY MARKED BY HIGHLY VISIBLE FENCING (ORANGE SAFETY FENCE).

NOTE: SEE SHEET 2B-1 FOR HORIZONTAL ALIGNMENT INFORMATION

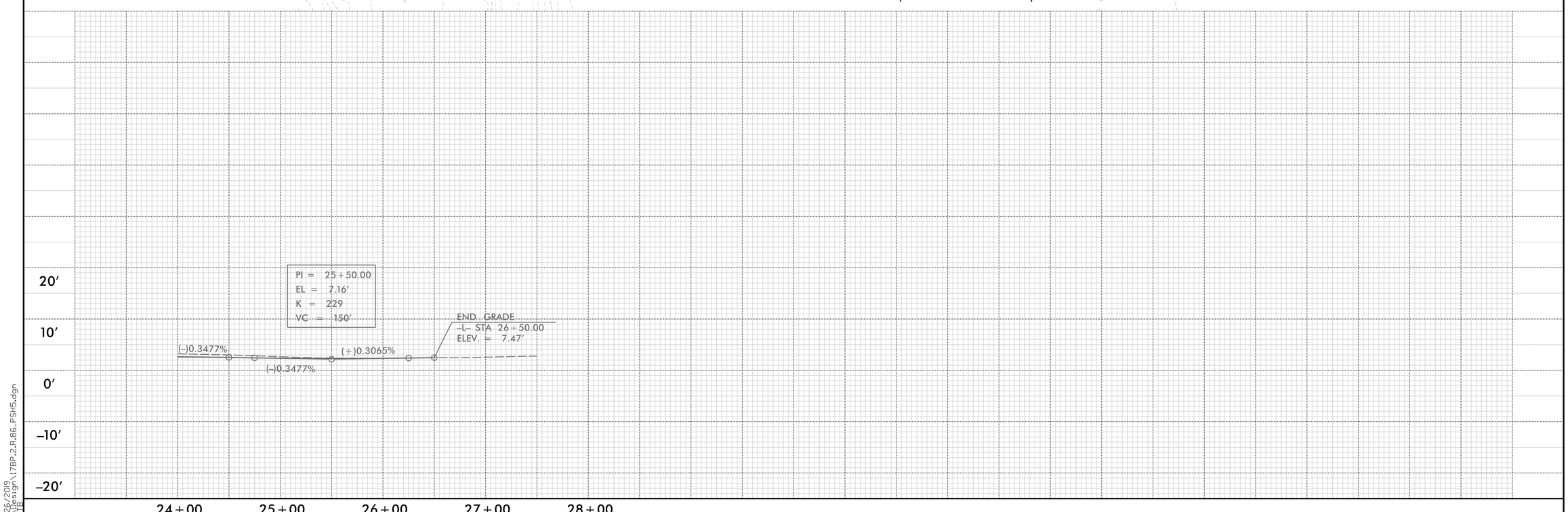

2/26/2019
HNTB
Design\17BP.2.R.86_PSH5.dgn

STATE	STATE PROJECT REFERENCE NO.	SHEET NO.	TOTAL SHEETS
N.C.	17BP.2.R.86	RF-1	
STATE PROJ. NO.	F. A. PROJ. NO.	DESCRIPTION	

PLANTING DETAILS

SEEDLING / LINER BAREROOT PLANTING DETAIL

HEALING IN

1. Locate a healing–in site in a shady, well protected area.
2. Excavate a flat bottom trench 12 inches deep and provide drainage.

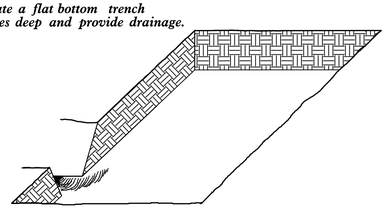

3. Backfill the trench with 2 inches well rotted sawdust. Place a 2 inch layer of well rotted sawdust at a sloping angle at one end of the trench.

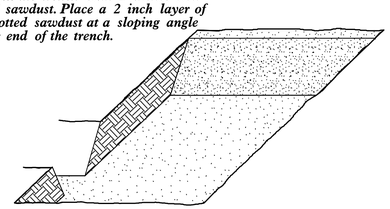

4. Place a single layer of plants against the sloping end so that the root collar is at ground level.

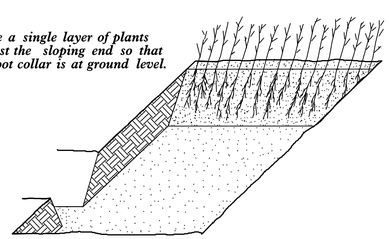

5. Place a 2 inch layer of well rotted sawdust over the roots maintaining a sloping angle.

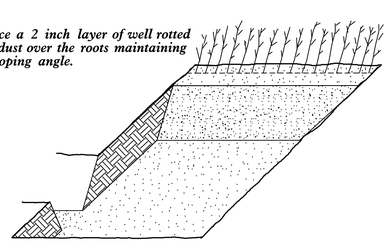

6. Repeat layers of plants and sawdust as necessary and water thoroughly.

DIBBLE PLANTING METHOD
USING THE KBC PLANTING BAR

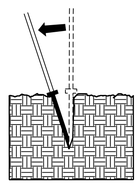

1. Insert planting bar as shown and pull handle toward planter.

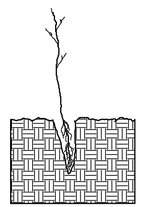

2. Remove planting bar and place seedling at correct depth.

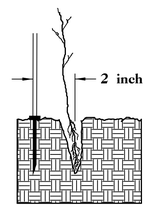

3. Insert planting bar 2 inches toward planter from seedling.

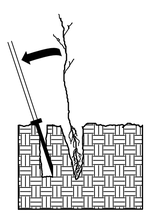

4. Pull handle of bar toward planter, firming soil at bottom.

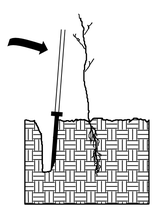

5. Push handle forward firming soil at top.

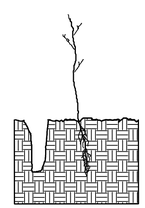

6. Leave compaction hole open. Water thoroughly.

PLANTING NOTES:

PLANTING BAG
During planting, seedlings shall be kept in a moist canvas bag or similar container to prevent the root systems from drying.

KBC PLANTING BAR
Planting bar shall have a blade with a triangular cross section, and shall be 12 inches long, 4 inches wide and 1 inch thick at center.

ROOT PRUNING
All seedlings shall be root pruned, if necessary, so that no roots extend more than 10 inches below the root collar.

REFORESTATION

☐ TREE REFORESTATION SHALL BE PLANTED 6 FT. TO 10 FT. ON CENTER, RANDOM SPACING, AVERAGING 8 FT. ON CENTER, APPROXIMATELY 680 PLANTS PER ACRE.

REFORESTATION

MIXTURE, TYPE, SIZE, AND FURNISH SHALL CONFORM TO THE FOLLOWING:

30%	PLATANUS OCCIDENTALIS	AMERICAN SYCAMORE	12 in – 18 in BR
30%	FRAXINUS PENNSYLVANICA	GREEN ASH	12 in – 18 in BR
40%	BETULA NIGRA	RIVER BIRCH	12 in – 18 in BR

REFORESTATION DETAIL SHEET

N.C.D.O.T. - ROADSIDE ENVIRONMENTAL UNIT

DocuSign Envelope ID: 388FF484-2202-4183-AE71-EF5CA63ED025

TIP PROJECT: 17BP.2.R.86

T.I.P. NO.	SHEET NO.
17BP.2.R.86	UC–1

STATE OF NORTH CAROLINA
DIVISION OF HIGHWAYS

UTILITY CONSTRUCTION PLANS
BEAUFORT COUNTY

LOCATION: REPLACE BRIDGE NO. 159 OVER PUNGO SWAMP

TYPE OF WORK: GRADING, DRAINAGE, PAVING AND STRUCTURE

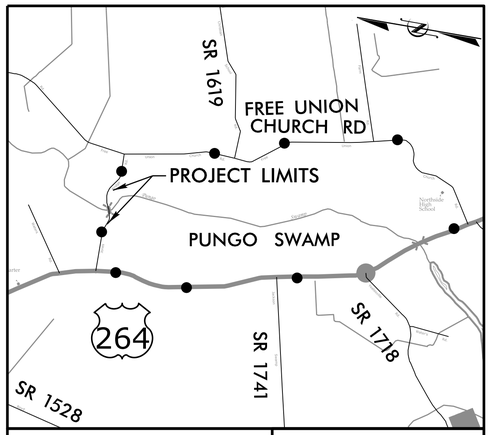

VICINITY MAP — OFFSITE DETOUR

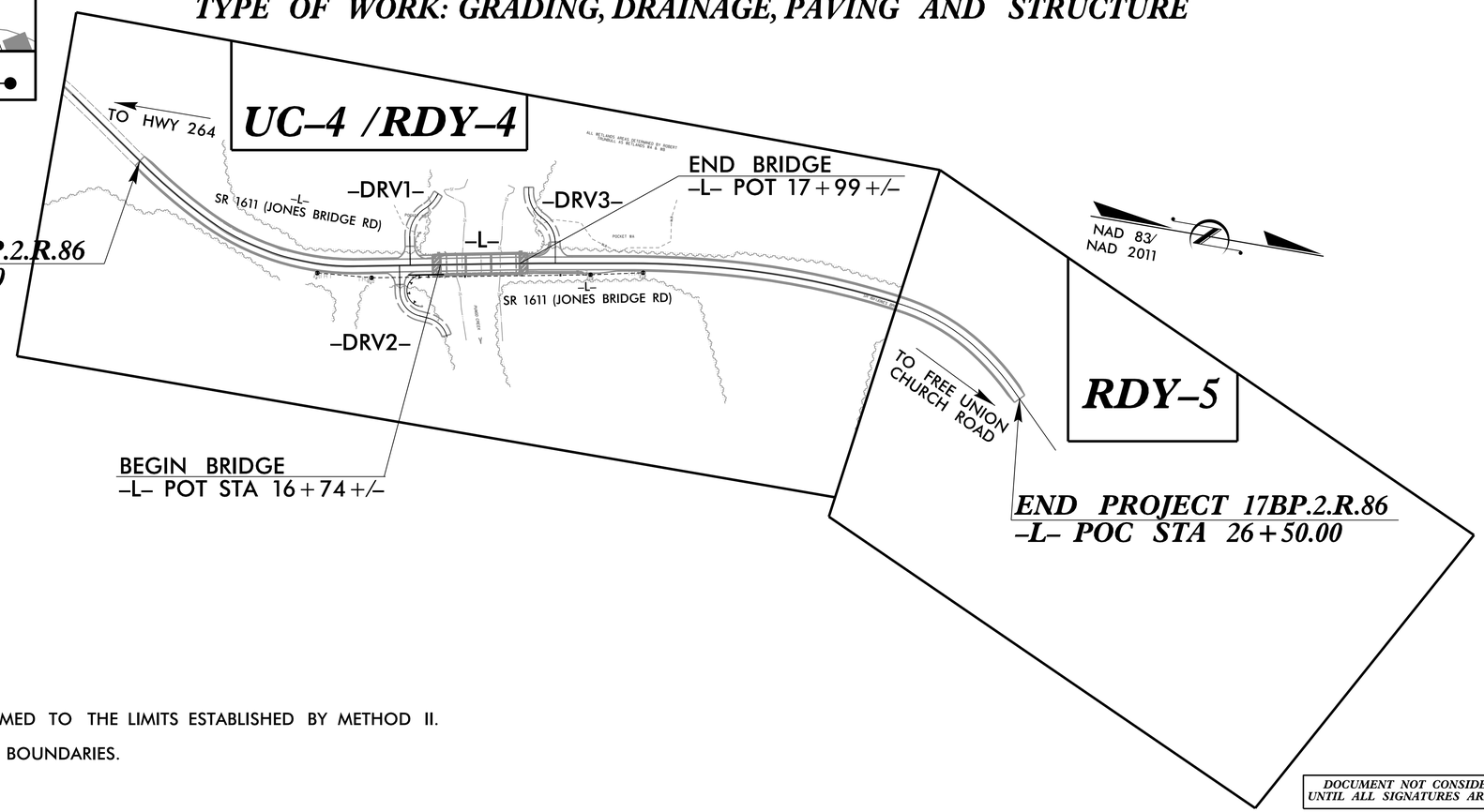

NOTES:

1. CLEARING ON THIS PROJECT SHALL BE PERFORMED TO THE LIMITS ESTABLISHED BY METHOD II.
2. THIS PROJECT IS NOT WITHIN ANY MUNICIPAL BOUNDARIES.

DOCUMENT NOT CONSIDERED FINAL UNTIL ALL SIGNATURES ARE COMPLETED

GRAPHIC SCALES

50 25 0 50 100 — PLANS

50 25 0 50 100 — PROFILE (HORIZONTAL)

10 5 0 10 20 — PROFILE (VERTICAL)

INDEX OF SHEETS

SHEET NO.:	DESCRIPTION:
UC–1	TITLE SHEET
UC–2	UTILITY SYMBOLOGY
UC–3	NOTES
UC–3A – 3B	DETAILS
UC–4	PLAN /PROFILE SHEET

WATER AND SEWER OWNERS ON PROJECT

(A) WATER – BEAUFORT COUNTY WATER DEPT

PREPARED IN THE OFFICE OF

M A Engineering Consultants, Inc.
598 East Chatham Street - Suite 137
Cary, NC 27511
Phone: 919.297.0220 Fax: 919.297.0221
NC License: F-0160

FOR

HNTB
HNTB NORTH CAROLINA, P.C.
343 E. Six Forks Road, Suite 200
Raleigh, North Carolina 27609
NC License No: C-1554

KEVIN ZDEB, PE	PROJECT ENGINEER
WEBB WHITE	UTILITY COORDINATOR
VICKY WANG, EI	DESIGN ENGINEER

SEAL

NORTH CAROLINA PROFESSIONAL SEAL 27611 ENGINEER KEVIN C. ZDEB

Docu Signed by: Kevin C. Zdeb

4/10/2019

DIVISION OF HIGHWAYS
HIGHWAY DIVISION 2
105 PACTOLUS HIGHWAY (NC 33)
P.O. BOX 1587
GREENVILLE NC 27835
PHONE (252) 439–2800
FAX (252) 830–3352

JEFF CABANISS, PE	DIVISION PROJECT DEVELOPMENT ENGINEER
HEATHER LANE, PE	DIVISION BRIDGE PROGRAM MANAGER
DWAYNE SMITH	DIV. UTILITY COORDINATOR
–	–

09/08/99
4/10/2019
P:\JOBS\0696\026\2900 Beaufort BR-159\Utilities\Engineering\UC\Proj\17bp.2.r.86_ut_UC-01_tsh.dgn
11:28:08 AM

PROJECT REFERENCE NO.	SHEET NO.
17BP.2.R.86	UC-2

STATE OF NORTH CAROLINA
DIVISION OF HIGHWAYS

UTILITIES PLAN SHEET SYMBOLS

PROPOSED WATER SYMBOLS

- Water Line (Sized as Shown) — 12" WL
- 11¼ Degree Bend
- 22½ Degree Bend
- 45 Degree Bend
- 90 Degree Bend
- Plug
- Tee
- Cross
- Reducer
- Gate Valve — GV
- Butterfly Valve — BV
- Tapping Valve — TGV
- Line Stop — LS
- Line Stop with Bypass — LS/BP
- Blow Off — BO
- Fire Hydrant — PFH
- Relocate Fire Hydrant — RFH
- Remove Fire Hydrant — REM FH
- Water Meter — PWM
- Relocate Water Meter — RWM
- Remove Water Meter — REM WM
- Water Pump Station — PS(W)
- RPZ Backflow Preventer — PRPZ
- DCV Backflow Preventer — PBFP
- Relocate RPZ Backflow Preventer — RRPZ
- Relocate DCV Backflow Preventer — RBFP

PROPOSED SEWER SYMBOLS

- Gravity Sewer Line (Sized as Shown) — 12" SS
- Force Main Sewer Line (Sized as Shown) — 12" FSS
- Manhole (Sized per Note)
- Sewer Pump Station — PS(SS)

PROPOSED MISCELLANOUS UTILITIES SYMBOLS

- Power Pole
- Telephone Pole
- Joint Use Pole
- Telephone Pedestal — TEL PED
- Utility Line by Others (Type as Shown) — PROP O/H POW LINES
- Trenchless Installation — 12" TL INSTALL
- Encasement by Open Cut — 24" ENCAS BY OC
- Encasement — 24" ENCASEMENT
- Thrust Block
- Air Release Valve — AR
- Utility Vault — UV
- Concrete Pier — CP
- Steel Pier — SP
- Plan Note — NOTE
- Pay Item Note — PAY ITEM

EXISTING UTILITIES SYMBOLS

- Power Pole
- Telephone Pole
- Joint Use Pole
- Utility Pole
- Utility Pole with Base
- H-Frame Pole
- Power Transmission Line Tower
- Water Manhole
- Power Manhole
- Telephone Manhole
- Sanitary Sewer Manhole
- Hand Hole for Cable
- Power Transformer
- Telephone Pedestal
- CATV Pedestal
- Gas Valve
- Gas Meter
- Located Miscellaneous Utility Object
- Abandoned According to Utility Records — AATUR
- End of Information — E.O.I.
- *Underground Power Line — P
- *Underground Telephone Cable — T
- *Underground Telephone Conduit — TC
- *Underground Fiber Optics Telephone Cable — T FO
- *Underground TV Cable — TV
- *Underground Fiber Optics TV Cable — TV FO
- *Underground Gas Pipeline — G
- Aboveground Gas Pipeline — A/G Gas
- *Underground Water Line — W
- Aboveground Water Line — A/G Water
- *Underground Gravity Sanitary Sewer Line — SS
- Aboveground Gravity Sanitary Sewer Line — A/G Sanitary Sewer
- *Underground SS Forced Main Line — FSS
- Underground Unknown Utility Line — ?UTL
- SUE Test Hole
- Water Meter
- Water Valve
- Fire Hydrant
- Sanitary Sewer Cleanout

*For Existing Utilities

- Utility Line Drawn from Record (Type as Shown) — W
- Designated Utility Line (Type as Shown) — W

REV: 2/1/2012

5/14/99
3/16/2012
Beaufort BRIDGE Utilities\Engineering\UC\Proj\17bp.2.r.86_ut_UC-02_sym.dgn

DocuSign Envelope ID: F5B878C2-D860-4442-8BDF-BEF71D8BC572

PROJECT REFERENCE NO.	SHEET NO.
17BP.2.R.86	UC-3

DESIGNED BY: VW
DRAWN BY: VW
CHECKED BY: KCZ
APPROVED BY: KCZ
REVISED:

NORTH CAROLINA DEPARTMENT OF TRANSPORTATION

UTILITIES ENGINEERING SEC.
PHONE:(919)707-6690
FAX:(919)250-4151

NORTH CAROLINA PROFESSIONAL SEAL 27611 ENGINEER KEVIN C. ZOLB

DocuSigned by:
Kevin C. Zolb
F5B878C2D860444...

4/10/2019

UTILITY CONSTRUCTION PLANS ONLY

UTILITY CONSTRUCTION

M A Engineering Consultants, Inc.
598 East Chatham Street - Suite 137
Cary, NC 27511
Phone: 919.297.0220 Fax: 919.297.0221
NC License: F-0160

DOCUMENT NOT CONSIDERED FINAL UNTIL ALL SIGNATURES ARE COMPLETED

UTILITY CONSTRUCTION

GENERAL NOTES:

1. THE PROPOSED UTILITY CONSTRUCTION SHALL MEET THE APPLICABLE REQUIREMENTS OF THE NC DEPARTMENT OF TRANSPORTATION'S "STANDARD SPECIFICATIONS FOR ROADS AND STRUCTURES" DATED JANUARY 2018.

2. THE EXISTING WATER LINE UTILITIES BELONG TO BEAUFORT COUNTY.

CONTACT: ERICK JENNINGS
PHONE: 252-975-0720

3. ALL WATER LINES TO BE INSTALLED WITHIN COMPLIANCE OF THE RULES AND REGULATIONS OF THE NORTH CAROLINA DEPARTMENT OF ENVIRONMENTAL AND NATURAL RESOURCES, DIVISION OF ENVIRONMENTAL HEALTH.

4. THE UTILITY OWNER OWNS THE EXISTING UTILITY FACILITIES AND WILL OWN THE NEW UTILITY FACILITIES AFTER ACCEPTANCE BY THE DEPARTMENT. THE DEPARTMENT OWNS THE CONSTRUCTION CONTRACT AND HAS ADMINISTRATIVE AUTHORITY. COMMUNICATIONS AND DECISIONS BETWEEN THE CONTRACTOR AND UTILITY OWNER ARE NOT BINDING UPON THE DEPARTMENT OR THIS CONTRACT UNLESS AUTHORIZED BY THE ENGINEER. AGREEMENTS BETWEEN THE UTILITY OWNER AND CONTRACTOR FOR THE WORK THAT IS NOT PART OF THIS CONTRACT OR IS SECONDARY TO THIS CONTRACT ARE ALLOWED, BUT ARE NOT BINDING UPON THE DEPARTMENT.

5. PROVIDE ACCESS FOR THE DEPARTMENT PERSONNEL AND THE OWNER'S REPRESENTATIVES TO ALL PHASES OF CONSTRUCTION. NOTIFY DEPARTMENT PERSONNEL AND THE UTILITY OWNER TWO WEEKS PRIOR TO COMMENCEMENT OF ANY WORK AND ONE WEEK PRIOR TO SERVICE INTERRUPTION. KEEP UTILITY OWNERS' REPRESENTATIVES INFORMED OF WORK PROGRESS AND PROVIDE OPPROTUNITY FOR INSPECTION OF CONSTRUCTION AND TESTING.

6. THE PLANS DEPICT THE BEST AVAILABLE INFORMATION FOR THE LOCATION, SIZE, AND TYPE OF MATERIAL FOR ALL EXISTING UTILITIES. MAKE INVESTIGATIONS FOR DETERMINING THE EXACT LOCATION, SIZE, AND TYPE MATERIAL OF THE EXISTING FACILITIES AS NECESSARY FOR THE CONSTRUCTION OF THE PROPOSED UTILITIES AND FOR AVOIDING DAMAGE TO EXISTING FACILITIES. REPAIR ANY DAMAGE INCURRED TO EXISTING FACILITIES TO THE ORIGINAL OR BETTER CONDITION AT NO ADDITONAL COST TO THE DEPARTMENT.

7. MAKE FINAL CONNECTIONS OF THE NEW WORK TO THE EXISTING SYSTEM WHERE INDICATED ON THE PLANS, AS REQUIRED TO FIT THE ACTUAL CONDITIONS, OR AS DIRECTED.

8. MAKE CONNECTIONS BETWEEN EXISTING AND PROPOSED UTILITIES AT TIMES MOST CONVENIENT TO THE PUBLIC, WITHOUT ENDANGERING THE UTILITY SERVICE, AND IN ACCORDANCE WITH THE UTILITY OWNER'S REQUIREMENTS. MAKE CONNECTIONS ON WEEKENDS, AT NIGHT, AND ON HOLIDAYS IF NECESSARY.

9. ALL UTILITY MATERIALS SHALL BE APPROVED PRIOR TO DELIVERY TO THE PROJECT. SEE 1500-7, " SUBMITTALS AND RECORDS" IN SECTION 1500 OF THE STANDARD SPECIFICATIONS.

10. CONTRACTOR SHALL NOT OPERATE ANY VALVES ON THE EXISTING UTILITY SYSTEMS. CONTRACTOR SHALL CONTACT THE UTILITY OWNER TO CONDUCT STRATEGIC OPERATION OF VALVES FOR SERVICE INTERRUPTION IN ORDER TO PERFORM SPECIFIC WORK.

PROJECT SPECIFIC NOTES:

1. PROPOSED OPEN TRENCH WATER LINE SHALL BE 6" DUCTILE IRON PIPE, CLASS 350, WITH GRIP RINGS.

2. ALL WATER LINE FITTINGS, 4-INCHES THROUGH 12-INCHES IN DIAMETER, SHALL BE DUCTILE IRON.

3. ALL PROPOSED FITTINGS (BENDS, TEES, CROSSES, REDUCERS, PLUGS, ETC.) SHALL BE ADEQUATELY RESTRAINED AS DIRECTED BY THE RESIDENT ENGINEER BY THE USE OF RESTRAINED JOINT CONSTRUCTION, OR RESTRAINED JOINT CONSTRUCTION WITH CAST IN PLACE CONCRETE THRUST RESTRAINTS, OR MECHANICAL JOINT CONSTRUCTION WITH CAST IN PLACE CONCRETE THRUST RESTRAINTS. CAST IN PLACE CONCRETE THRUST RESTRAINTS SHALL BE AS DETAILED ON THESE DRAWINGS

4. PROPOSED WATER LINE FOR DIRECTIONAL DRILLING SHALL BE D.I.P.S. 8" HDPE DR-9 (250 PSI PRESSURE) PIPE WITH A BLUE STRIPE AND WITH MATERIAL DESIGNATION PE 4710 THAT CONFORMS TO ANSI-14 / NSF-61 AND AWWA C906.

5. CONTRACTOR'S ATTENTION IS DIRECTED TO SECTIONS 102, 107, AND 1550 OF THE STANDARD SPECIFICATIONS CONCERNING TRENCHLESS INSTALLATION. IT IS CONTRACTOR'S RESPONSIBILITY TO HAVE BORE DESIGNED AND SEALED BY A LICENSED NORTH CAROLINA PROFESSIONAL ENGINEER. NO DAMAGE IS ALLOWED TO RIVER, STREAM, CREEK, WETLANDS, OR BUFFER ZONES.

PROJECT QUANTITIES

ITEM NUMBER	DESCRIPTION	QUANTITY	
5325600000-E	6" WATER LINE	129	LF
5325800000-E	8" WATER LINE	409	LF
5329000000-E	DUCTILE IRON WATER PIPE FITTINGS	340	POUNDS
5540000000-E	6" VALVE	2	EA
5800000000-E	ABANDON 6" UTILITY PIPE	537	LF
5872608000-E	DIRECTIONAL DRILLING OF 8"	409	LF

4/10/2019
8:06:55 AM
12:02:01 PM
P:\0695\026\12900 Beaufort BR-159\Utilities\Engineering\UC\Proj\17bp.2.r.86_ut_UC-03_not.dgn

DocuSign Envelope ID: 207D7E76-B605-41B1-ACCD-00748D80926E

PROJECT REFERENCE NO.	SHEET NO.
17BP.2.R.86	UC-3A

DESIGNED BY: VW
DRAWN BY: VW
CHECKED BY: KCZ
APPROVED BY: KCZ
REVISED:

NORTH CAROLINA DEPARTMENT OF TRANSPORTATION

UTILITIES ENGINEERING SEC.
PHONE:(919)707-6690
FAX:(919)250-4151

NORTH CAROLINA PROFESSIONAL SEAL 27611 ENGINEER KEVIN C. ZUEB

DocuSigned by:
Kevin C. Zueb
4/10/2019

UTILITY CONSTRUCTION PLANS ONLY

UTILITY CONSTRUCTION

M A Engineering Consultants, Inc.
598 East Chatham Street - Suite 137
Cary, NC 27511
Phone: 919.297.0220 Fax: 919.297.0221
NC License: F-0160

DOCUMENT NOT CONSIDERED FINAL UNTIL ALL SIGNATURES ARE COMPLETED

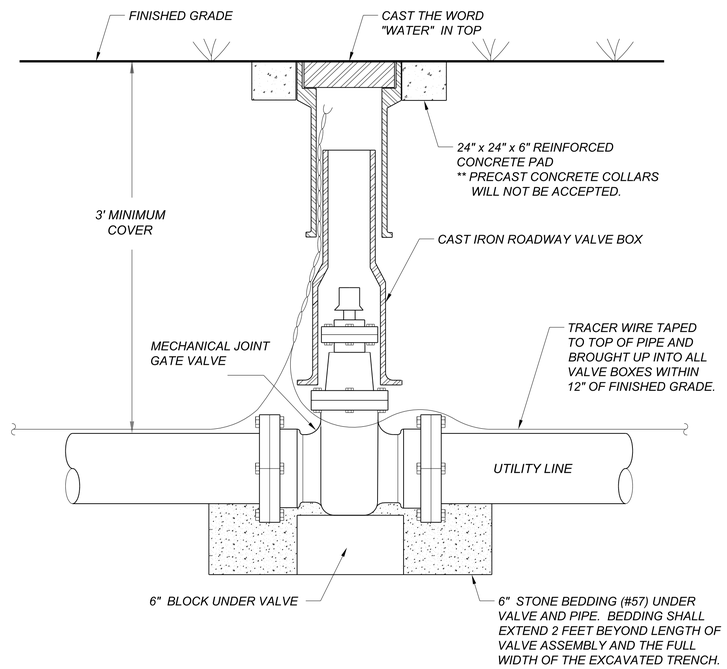

GATE VALVE DETAIL
NTS

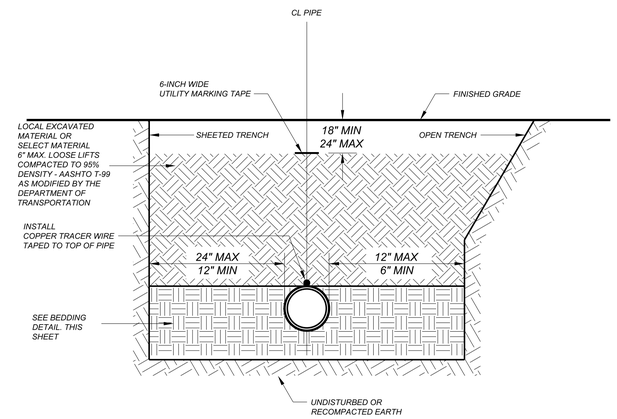

NOTES:
1. ALL SHORING & TRENCHING SHALL COMPLY WITH OSHA SAFETY STANDARDS FOR THE CONSTRUCTION INDUSTRY.
2. BELL HOLES NOT SHOWN.
3. ALL BACKFILL MATERIAL SHALL BE FREE OF ROCKS, FOREIGN MATERIAL, AND FROZEN EARTH.

GENERAL TRENCH DETAIL
NTS

MAXIMUM OPEN TRENCH WIDTH AT TOP OF PIPE

NOMINAL PIPE SIZE (INCHES)	TRENCH WIDTH (INCHES)	NOMINAL PIPE SIZE (INCHES)	TRENCH WIDTH (INCHES)
4	28	20	44
6	30	24	48
8	32	30	54
10	34	36	60
12	36	42	66
14	38	48	72
16	40	54	78
18	42		

PIPE BEDDING DETAIL

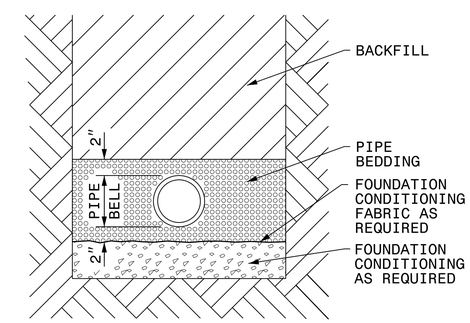

PLACE FOUNDATION CONDITIONING MATERIAL BELOW BEDDING IF REQUIRED, AS DIRECTED BY ENGINEER. PIPE BEDDED IN SELECT MATERIAL, CLASS II (TYPE 1) OR CLASS III. TRENCH BACKFILLED IN LOOSE 6" LAYERS COMPACTED TO TOP OF TRENCH USING LOCAL EXCAVATED MATERIAL IF APPROVED BY THE ENGINEER, OR SELECT MATERIAL. ALL MATERIAL SHALL BE FREE OF ROCKS, FOREIGN MATERIAL, AND FROZEN EARTH. COMPACTION SHALL BE TO APPROXIMATELY 95% DENSITY IN ACCORDANCE WITH AASHTO T-99 AS MODIFIED BY THE DEPARTMENT OF TRANSPORTATION.

5/14/99
Beaufort BB4 4/10/2019 12:05:47 PM Utilities\Engineering\UC\Proj\17bp.2.r.86_ut_UC-03A_dtl.dgn

DocuSign Envelope ID: 87AEA261-854B-4A9D-8DEF-4FD0DA2D5004

5/14/99

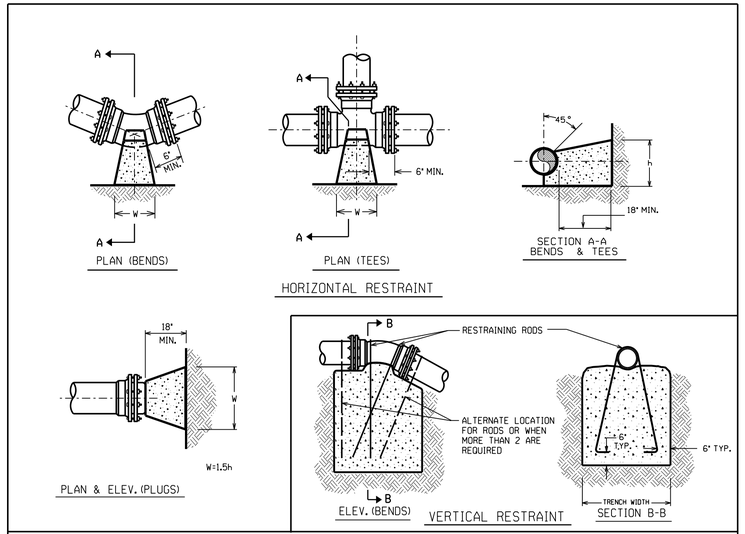

THRUST RESTRAINT FOR PIPE LINES

RESTRAINED JOINT DESIGN TABLE

FITTING	REQUIRED RESTRAINED LENGTH (FT) OF BARE D.I. PIPE BY DEPTH OF COVER							
HORIZONTAL BENDS	**3 FT**	**4 FT**	**5 FT**	**6 FT**	**7 FT**	**8 FT**	**9 FT**	**10 FT**
6 INCH DIA - 11.25 DEG	3	2	2	2	2	1	1	1
6 INCH DIA - 22.5 DEG	5	4	4	3	3	3	3	2
6 INCH DIA - 45 DEG	11	9	8	7	7	6	5	5
6 INCH DIA - 90 DEG	26	22	19	17	16	14	13	12
VERTICAL DOWN BENDS	**3 FT**	**4 FT**	**5 FT**	**6 FT**	**7 FT**	**8 FT**	**9 FT**	**10 FT**
6 INCH DIA - 11.25 DEG	7	6	6	5	4	4	4	3
6 INCH DIA - 22.5 DEG	15	13	11	10	9	8	8	7
6 INCH DIA - 45 DEG	31	27	23	21	19	17	16	15
VERTICAL UP BENDS	**3 FT**	**4 FT**	**5 FT**	**6 FT**	**7 FT**	**8 FT**	**9 FT**	**10 FT**
6 INCH DIA - 11.25 DEG	3	2	2	2	2	1	1	1
6 INCH DIA - 22.5 DEG	5	4	4	3	3	3	3	2
6 INCH DIA - 45 DEG	11	9	8	7	7	6	5	5

ASSUMPTIONS

LAYING CONDITION = TYPE 4
SOIL DESIGNATION = GC = COHESIVE-GRANULAR
DESIGN PRESSURE = 200 PSI (TEST PRESSURE)
SAFETY FACTOR = 1.5

NOTES

1. RESTRAINED LENGTH IS MEASURED FROM THE CENTER OF THE BEND AS FOLLOWS:
   A. HORIZONTAL AND VERTICAL BENDS: ALONG EACH SIDE OF BEND.
   B. HORIZONTAL AND VERTICAL BENDS - OFFSET OR COMBINED: ALONG THE OUTER SIDE OF EACH BEND. ALL PIPE BETWEEN THE TWO BENDS SHALL BE RESTRAINED JOINT WHEN THE DISTANCE BETWEEN THEM IS EQUAL TO OR LESS THAN THE REQUIRED RESTRAINED LENGTH. WHEN THE DISTANCE BETWEEN BENDS IS LESS THAN REQUIRED, THE BALANCE OF THE REQUIRED RESTRAINED LENGTH SHALL BE ADDED ON TO THE LENGTH ALONG THE OUTSIDE OF EACH BEND RESPECTIVELY TO MAKE UP FOR THE DEFICIENCY IN THAT DIRECTION.
   HORIZONTAL BEND EXAMPLE...
   INSTALL A 8 INCH 45 DEG BEND AND A 22.5 DEG BEND WITH 10 FEET BETWEEN BENDS AND 4 FEET OF COVER. THE CONTRACTOR SHALL PROVIDE AN ADDITIONAL 1 FOOT OF RESTRAINED LENGTH BEYOND THE 45 DEGREE BEND (FOR A TOTAL OF 13 FEET) AND AN ADDITIONAL 7 FEET OF RESTRAINED LENGTH BEYOND THE 22.5 DEGREE BEND (FOR A TOTAL OF 13 FEET).
2. WHEN IT IS NOT POSSIBLE TO INSTALL THE RESTRAINED LENGTHS AS NOTED BY THIS TABLE, THE CONTRACTOR SHALL INSTALL THE APPROPRIATE CONCRETE THRUST RESTRAINTS AS PER THE DETAILS HEREIN.

BASED ON TEST PRESSURE OF 200 P.S.I.

HORIZONTAL RESTRAINT
(ALL AREAS GIVEN ARE IN SQUARE FEET)

PIPE SIZE	DEGREE OF BEND	LBS. STATIC THRUST •	ALLOWABLE SOIL BEARING (PSF) 1000	2000	3000	4000	5000	6000	7000	8000
4"	11 1/4°	616	1	1	1	1	1	1	1	1
	22 1/2°	1,226	1	1	1	1	1	1	1	1
	45°	2,405	2	1	1	1	1	1	1	1
	90°	4,444	4	2	1	1	1	1	1	1
	TEE/PLUG	3,143	3	2	1	1	1	1	1	1
6"	11 1/4°	1,385	2	1	1	1	1	1	1	1
	22 1/2°	2,758	3	2	1	1	1	1	1	1
	45°	5,409	5	3	2	2	1	1	1	1
	90°	9,999	10	5	3	3	2	2	2	1
	TEE/PLUG	7,068	7	4	3	2	2	1	1	1
8"	11 1/4°	2,463	2	1	1	1	1	1	1	1
	22 1/2°	4,904	5	3	2	1	1	1	1	1
	45°	9,619	10	5	3	2	2	2	2	1
	90°	17,773	18	9	6	4	4	3	3	2
	TEE/PLUG	12,568	13	6	4	3	3	2	2	2
10"	11 1/4°	3,846	4	2	2	1	1	1	1	1
	22 1/2°	7,661	8	4	3	2	2	2	1	1
	45°	15,028	15	8	5	4	3	3	2	2
	90°	27,768	28	14	9	7	6	5	4	3
	TEE/PLUG	19,635	20	10	7	5	4	3	3	2
12"	11 1/4°	5,543	6	3	2	2	1	1	1	1
	22 1/2°	11,032	11	6	4	3	2	2	2	2
	45°	21,641	22	11	7	5	4	4	3	3
	90°	39,987	40	20	13	10	8	7	6	5
	TEE/PLUG	28,274	28	14	9	7	6	5	4	4
14"	11 1/4°	7,544	8	4	3	2	2	2	1	1
	22 1/2°	15,016	15	8	5	4	3	3	2	2
	45°	29,455	29	15	10	7	6	5	4	4
	90°	54,426	54	27	18	14	11	9	8	7
	TEE/PLUG	38,485	38	19	13	10	8	6	5	5
16"	11 1/4°	9,854	10	5	3	3	2	2	2	2
	22 1/2°	19,612	20	10	7	5	4	3	3	3
	45°	38,471	38	17	13	10	8	6	5	5
	90°	71,085	71	36	24	18	14	12	10	9
	TEE/PLUG	50,265	50	25	17	13	10	8	7	6

• INCLUDES 1.25 SAFETY FACTOR

VERTICAL RESTRAINT
(ALL VOLUMES GIVEN ARE IN CUBIC YARDS)••

PIPE SIZE	RESTRAINING RODS NO.REQ'D	DIA.	DEGREE OF BEND 11 1/4°	22 1/2°	45°
4"	2	1/2"	0.25	0.50	0.75
6"	2	1/2"	0.50	1.0	1.75
8"	2	5/8"	0.75	1.50	3.0
10"	2	3/4"	1.25	2.25	4.50
12"	2	7/8"	1.75	3.25	6.50
14"	4	5/8"	2.25	4.50	8.75
16"	4	3/4"	3.0	6.0	11.50

••INCLUDES 1.50 SAFETY FACTOR

GENERAL NOTES:
1. CONCRETE SHALL BE CLASS "B".
2. CONCRETE SHALL NOT CONTACT BOLTS ENDS OF MECHANICAL JOINT FITTINGS.
3. CONSULT WITH ENGINEER FOR CONCRETE REQUIREMENTS ON MAINS LARGER THAN 16 INCHES. (FOR VERTICAL & HORIZONTAL BENDS)
4. ALLOWABLE SOIL BEARING SHALL BE DETERMINED BY THE ENGINEER.

REVISIONS

NO.	DATE	DESCRIPTION

SHEET 2 OF 2

THRUST RESTRAINT FOR WATER MAINS

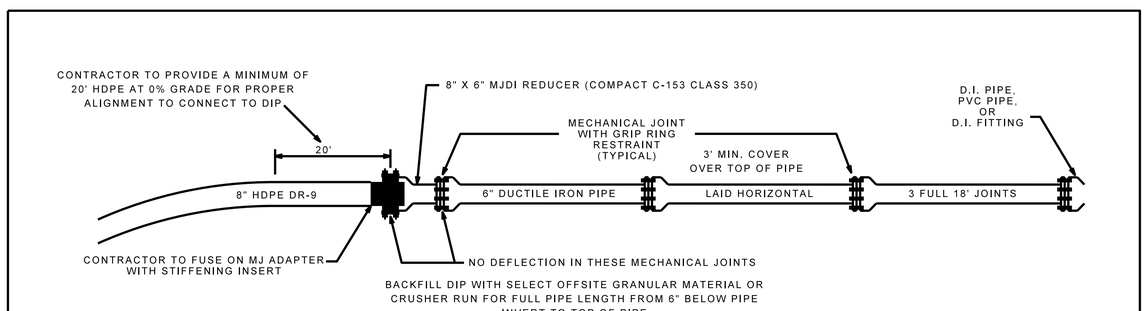

8" HDPE X 6 " DIP TRANSITION DETAIL

NOT TO SCALE

PROJECT REFERENCE NO.	SHEET NO.
17BP.2.R.86	UC-3B

DESIGNED BY: VW
DRAWN BY: VW
CHECKED BY: KCZ
APPROVED BY: KCZ
REVISED:

NORTH CAROLINA DEPARTMENT OF TRANSPORTATION

UTILITIES ENGINEERING SEC.
PHONE:(919)707-6690
FAX:(919)250-4151

NORTH CAROLINA PROFESSIONAL SEAL 27611 ENGINEER KEVIN C. ZOLB
DocuSigned by:
Kevin C. Zolb
4/10/2019

UTILITY CONSTRUCTION PLANS ONLY

UTILITY CONSTRUCTION

M A Engineering Consultants, Inc.
598 East Chatham Street - Suite 137
Cary, NC 27511
Phone: 919.297.0220 Fax: 919.297.0221
NC License: F-0160

DOCUMENT NOT CONSIDERED FINAL UNTIL ALL SIGNATURES ARE COMPLETED

4/10/2019
12:06:24 PM
Beaufort BR-0101 Utilities\Engineering\UC\Proj\17bp.2.r.86_ut_UC-03B_dtl.dgn

DocuSign Envelope ID: 55573779-A5FB-4CE3-A081-FC938916D82A

8/17/99

PROJECT REFERENCE NO.	SHEET NO.
17BP.2.R.86	UC-4
DESIGNED BY: VW	
DRAWN BY: VW	
CHECKED BY: KCZ	
APPROVED BY: KCZ	
REVISED:	
NORTH CAROLINA DEPARTMENT OF TRANSPORTATION	
UTILITIES ENGINEERING SEC. PHONE:(919)707-6690 FAX:(919)250-4151	UTILITY CONSTRUCTION PLANS ONLY

NORTH CAROLINA PROFESSIONAL SEAL 27611 ENGINEER KEVIN C. ZOEB

Docusigned by: Kevin C. Zoeb 4/12/2019

UTILITY CONSTRUCTION

M A Engineering Consultants, Inc.
598 East Chatham Street - Suite 137
Cary, NC 27511
Phone: 919.297.0220 Fax: 919.297.0221
NC License: F-0160

DOCUMENT NOT CONSIDERED FINAL UNTIL ALL SIGNATURES ARE COMPLETED

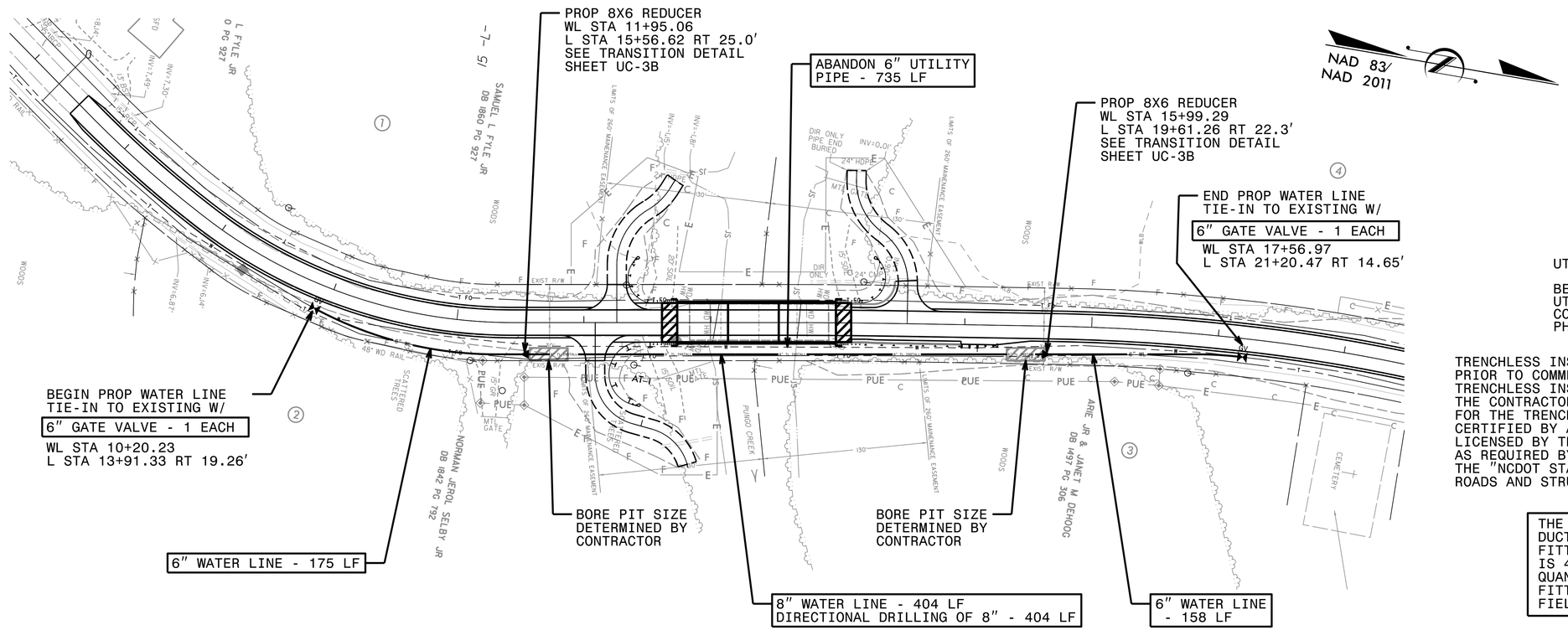

UTILITY OWNERS ON THIS PROJECT

BEAUFORT COUNTY UTILITIES
UTILITY: 6" WATER
CONTACT: ERICK JENNINGS
PHONE: 252-402-6547

TRENCHLESS INSTALLATION NOTE:
PRIOR TO COMMENCING ANY WORK ON ANY TRENCHLESS INSTALLATION ON THIS PROJECT, THE CONTRACTOR SHALL PROVIDE A DESIGN FOR THE TRENCHLESS INSTALLATION THAT IS CERTIFIED BY A PROFESSIONAL ENGINEER LICENSED BY THE STATE OF NORTH CAROLINA, AS REQUIRED BY SUBARTICLE 1550-3(B) OF THE "NCDOT STANDARD SPECIFICATIONS FOR ROADS AND STRUCTURES" DATED JANUARY 2018.

THE ESTIMATED QUANTITY OF DUCTILE IRON WATER PIPE FITTINGS ON THIS PLAN SHEET IS 490 POUNDS. THE ACTUAL QUANTITY AND TYPE OF FITTINGS WILL VARY BASED ON FIELD CONDITIONS.

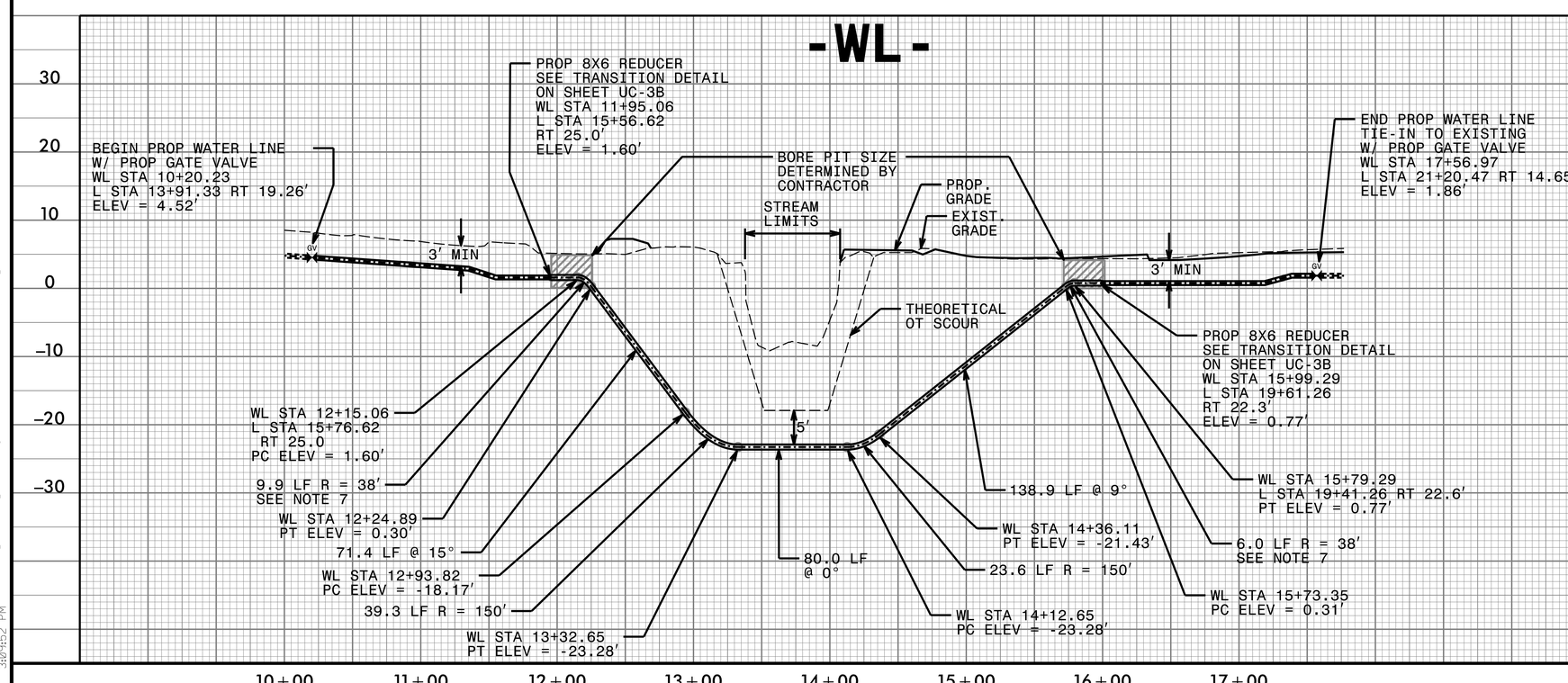

NOTES:

1. PIPE TO BE INSTALLED WITH 3 FEET MINIMUM COVER TO TOP OF PIPE.
2. BRIDGE SURVEY & HYDRAULIC DESIGN REPORT BY OTHERS STATES THE THEORETICAL 100 YEAR SCOUR BED ELEVATION IS -17.9 FT.
3. TRENCHLESS INSTALLATION SHALL PROVIDE 5 FEET MINIMUM COVER FROM 100 YEAR SCOUR BED ELEVATION TO TOP OF PIPE OR 10 MINIMUM COVER FROM BOTTOM OF STREAM TO TOP OF PIPE, WHICHEVER IS GREATER.
4. ALL PROPOSED PIPE ELEVATIONS IN PROFILE REFER TO CENTER OF PIPE.
5. WATER LINE SHALL BE INSTALLED A MINIMUM OF 5 FEET INSIDE THE EXISTING RIGHT OF WAY.
6. EXISTING PIPE AT TIE-IN LOCATIONS ARE ESTIMATED BASED ON TEST HOLE REPORT PROVIDED BY OTHERS. CONTRACTOR SHALL VERIFY PIPE LOCATION BEFORE STARTING WORK.
7. HDPE PIPE SHALL BE FIELD BENT WITH A MINIMUM RADIUS = 50 X PIPE O.D. PER BEAUFORT COUNTY STANDARD PRACTICE OR WITH MANUFACTURER'S MINIMUM ALLOWABLE BEND RADIUS, WHICHEVER IS GREATER.
8. CONTRACTOR SHALL LOCATE THE FIBER OPTIC LINE PRIOR TO STARTING ANY UTILITY CONSTRUCTION TO ENSURE THE FIBER OPTIC LINE IS NOT DISTURBED.

Beaufort BR-1590 4/12/2019 3:04:52 PM

09/08/99

TIP PROJECT: 17BP.2.R.86

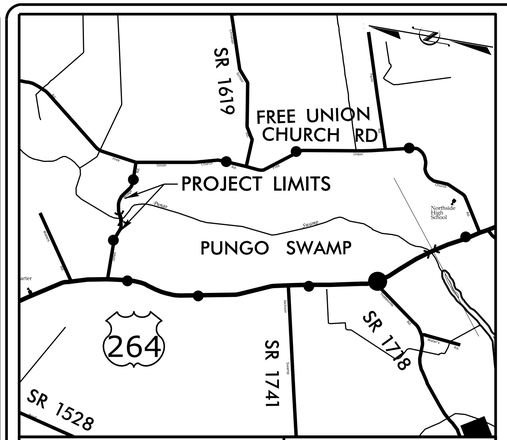

VICINITY MAP

OFFSITE DETOUR

STATE OF NORTH CAROLINA
DIVISION OF HIGHWAYS

T.I.P. NO.	SHEET NO.
17BP.2.R.86	UO–1

NOTE:
ALL UTILITY WORK SHOWN ON THIS SHEET WILL BE DONE BY OTHERS.
NO PAYMENT WILL BE MADE TO THE CONTRACTOR FOR UTILITY WORK SHOWN ON THIS SHEET.

UTILITIES BY OTHERS PLANS
BEAUFORT COUNTY

LOCATION: REPLACE BRIDGE NO. 159 OVER PUNGO SWAMP
TYPE OF WORK: POWER AND PHONE RELOCATION

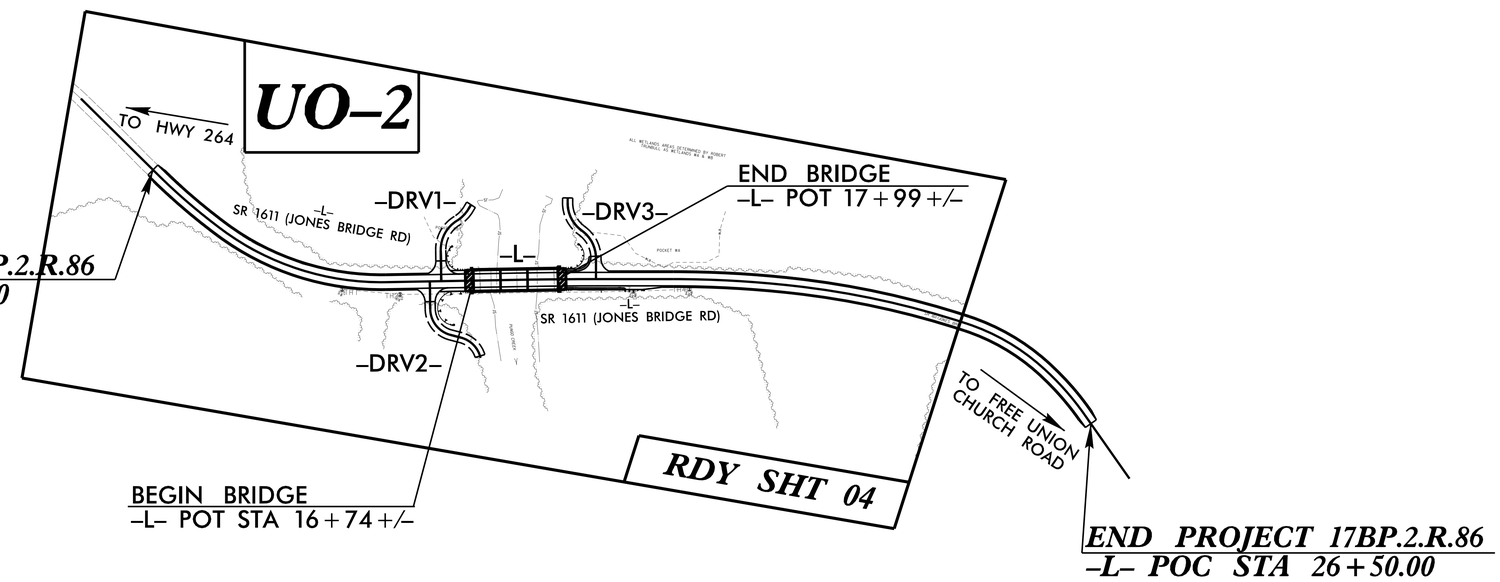

GRAPHIC SCALES

50 25 0 50 100
PLANS

50 25 0 50 100
PROFILE (HORIZONTAL)

10 5 0 10 20
PROFILE (VERTICAL)

INDEX OF SHEETS

SHEET NO.:	DESCRIPTION:
UO–1	TITLE SHEET
UO–2	UBO PLAN SHEET

UTILITY OWNERS WITH CONFLICTS

(A) POWER – CITY OF WASHINGTON
(B) PHONE – TRI COUNTY BROADBAND

PREPARED IN THE OFFICE OF:

M A Engineering Consultants, Inc.
598 East Chatham Street - Suite 137
Cary, NC 27511
Phone: 919.297.0220 Fax: 919.297.0221
NC License: F-0160

WEBB WHITE — UTILITY PROJECT COORDINATOR
DAVID KRAMER — PROJECT UTILITY ENGINEER

DIVISION OF HIGHWAYS
DIVISION 02
DIV ADDRESS
1037 W.H. SMITH BLVD
GREENVILLE, NC 27835

MICHAEL AMAN, PE
DIVISION 2 BRIDGE PROGAM MANAGER

4/9/2019
P:\JOBS\0696\026\2900 Beaufort BR-159\Roadway\Proj\UC00R\UB0\17BP.2.R.86_uo_TSH.dgn
11:55:20 AM

5/14/99

PROJECT REFERENCE NO.	SHEET NO.
17BP.2.R.86	U0-2
THIS SHEET CORRESPONDS TO RDY-PSH04	

UTILITIES BY OTHERS

ALL PROPOSED UTILITY WORK SHOWN ON THIS SHEET WILL BE DONE BY OTHERS. NO PAYMENT WILL BE MADE TO THE CONTRACTOR FOR PROPOSED UTILITY WORK SHOWN ON THIS SHEET.

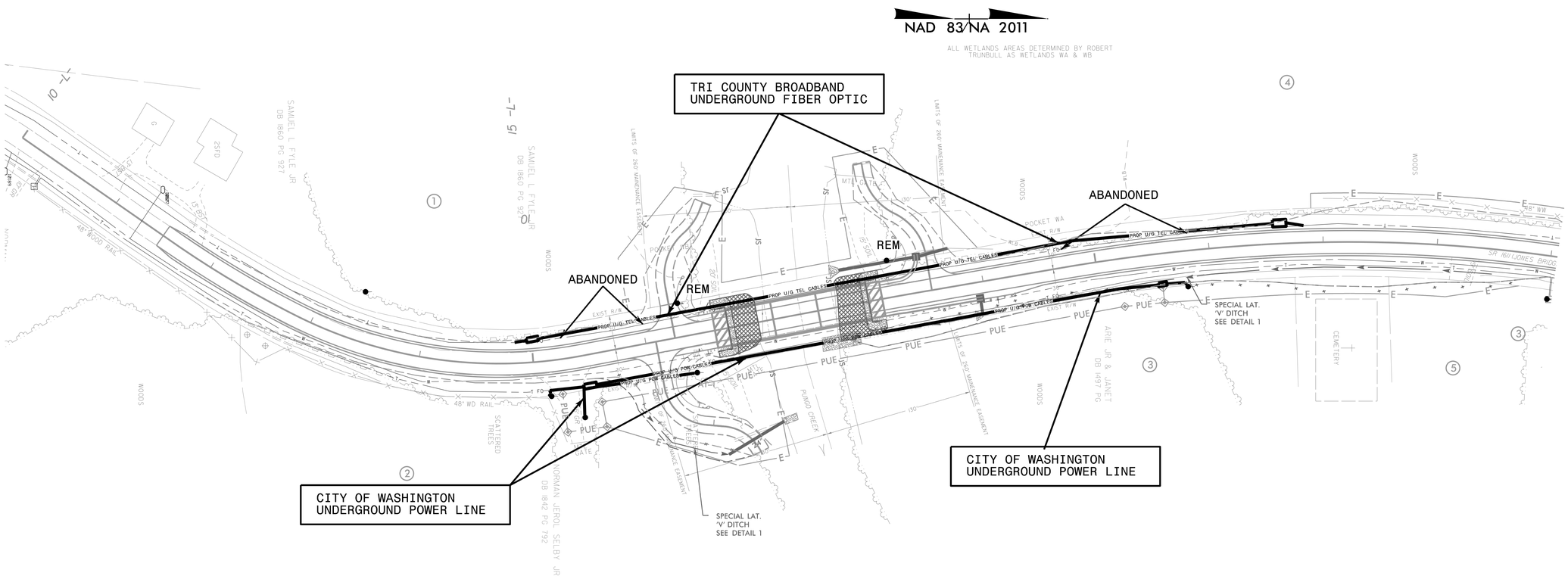

0 2.5 5	PROJ. REFERENCE NO.	SHEET NO.
	17BP.2.R.86	X-1

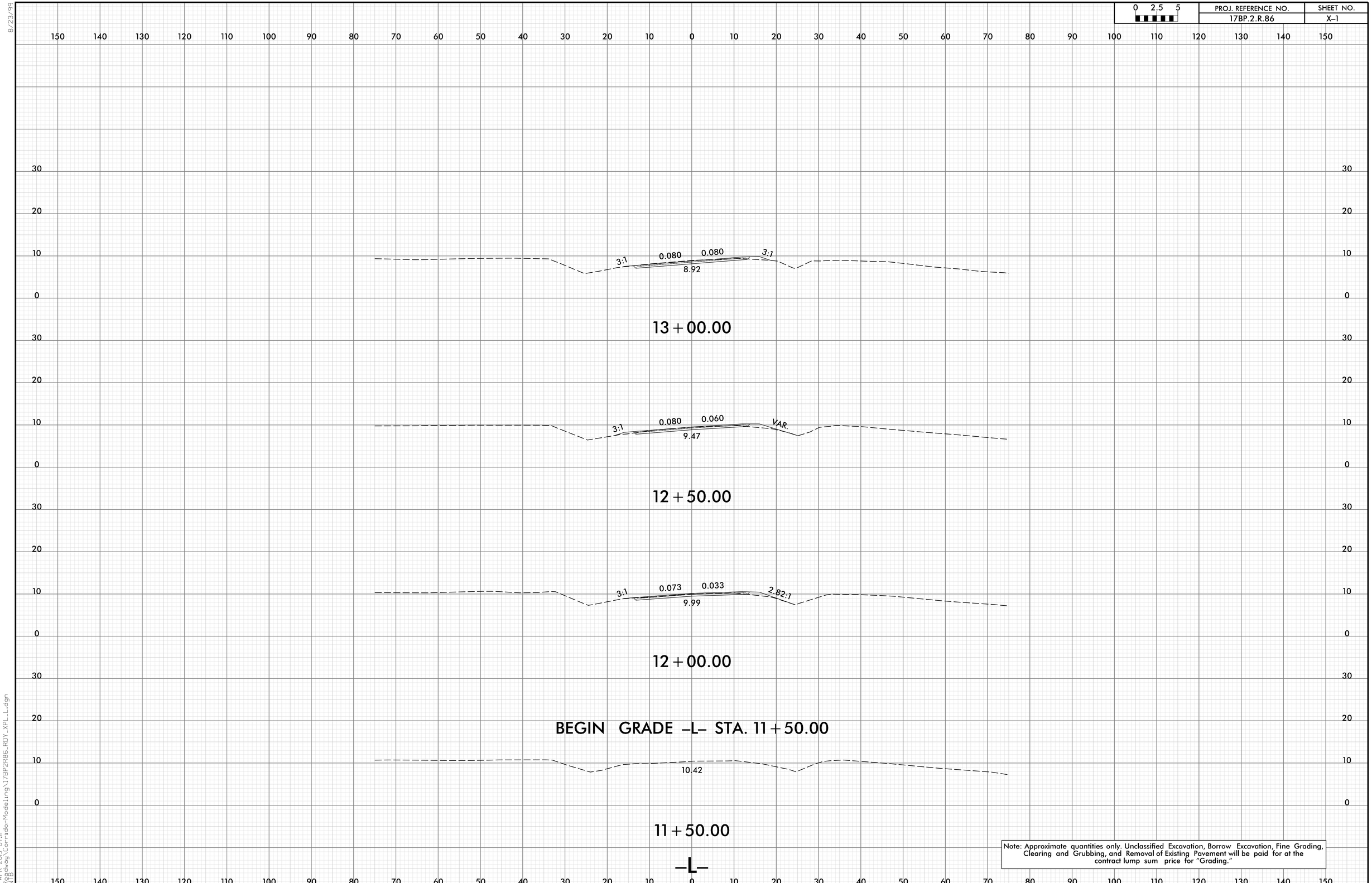

Note: Approximate quantities only. Unclassified Excavation, Borrow Excavation, Fine Grading, Clearing and Grubbing, and Removal of Existing Pavement will be paid for at the contract lump sum price for "Grading."

8/23/99

15-APR-2019 07:11
\Roadway\Corridor-Modeling\17BP2R86_RDY_XPL_L.dgn
MNB

0 2.5 5	PROJ. REFERENCE NO.	SHEET NO.
	17BP.2.R.86	X-2

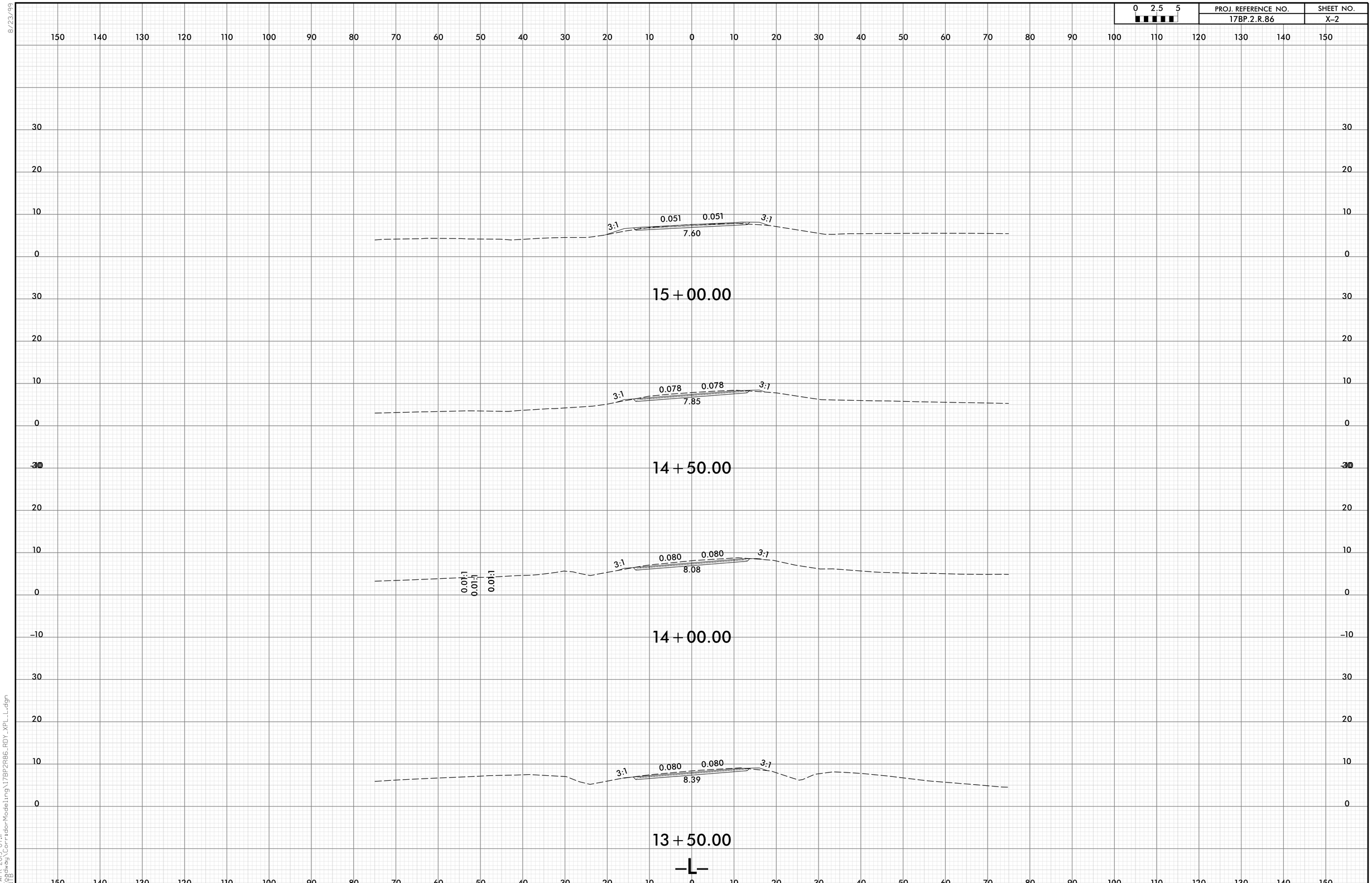

8/23/99

15-APR-2019 07:11
\Roadway\CorridorModeling\17BP2R86_RDY_XPL_L.dgn
INTB

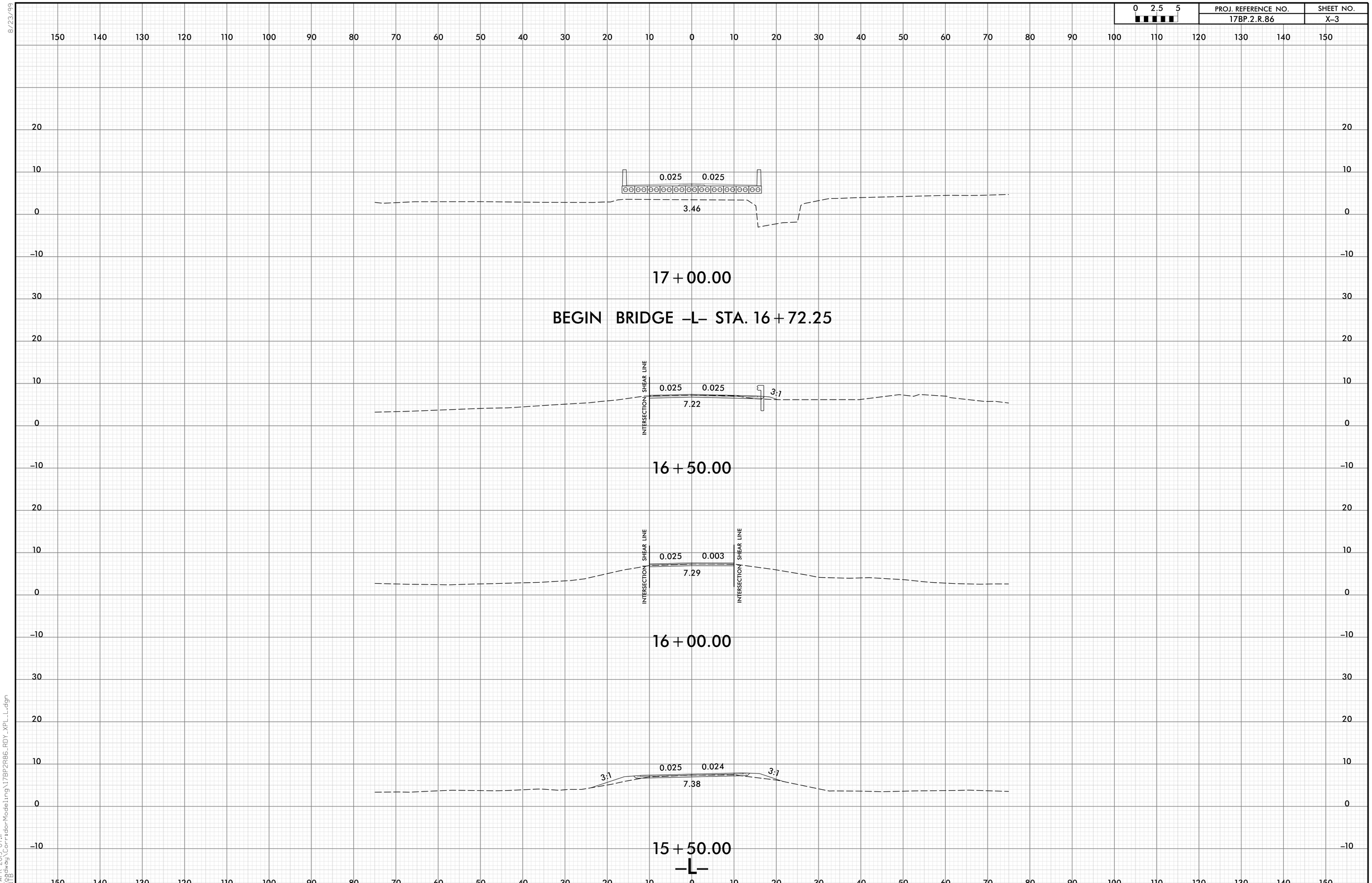

8/23/99
15-APR-2019 07:11
\Roadway\CorridorModeling\17BP2R86_RDY_XPL_L.dgn
INTB

0 2.5 5	PROJ. REFERENCE NO.	SHEET NO.
	17BP.2.R.86	X-4

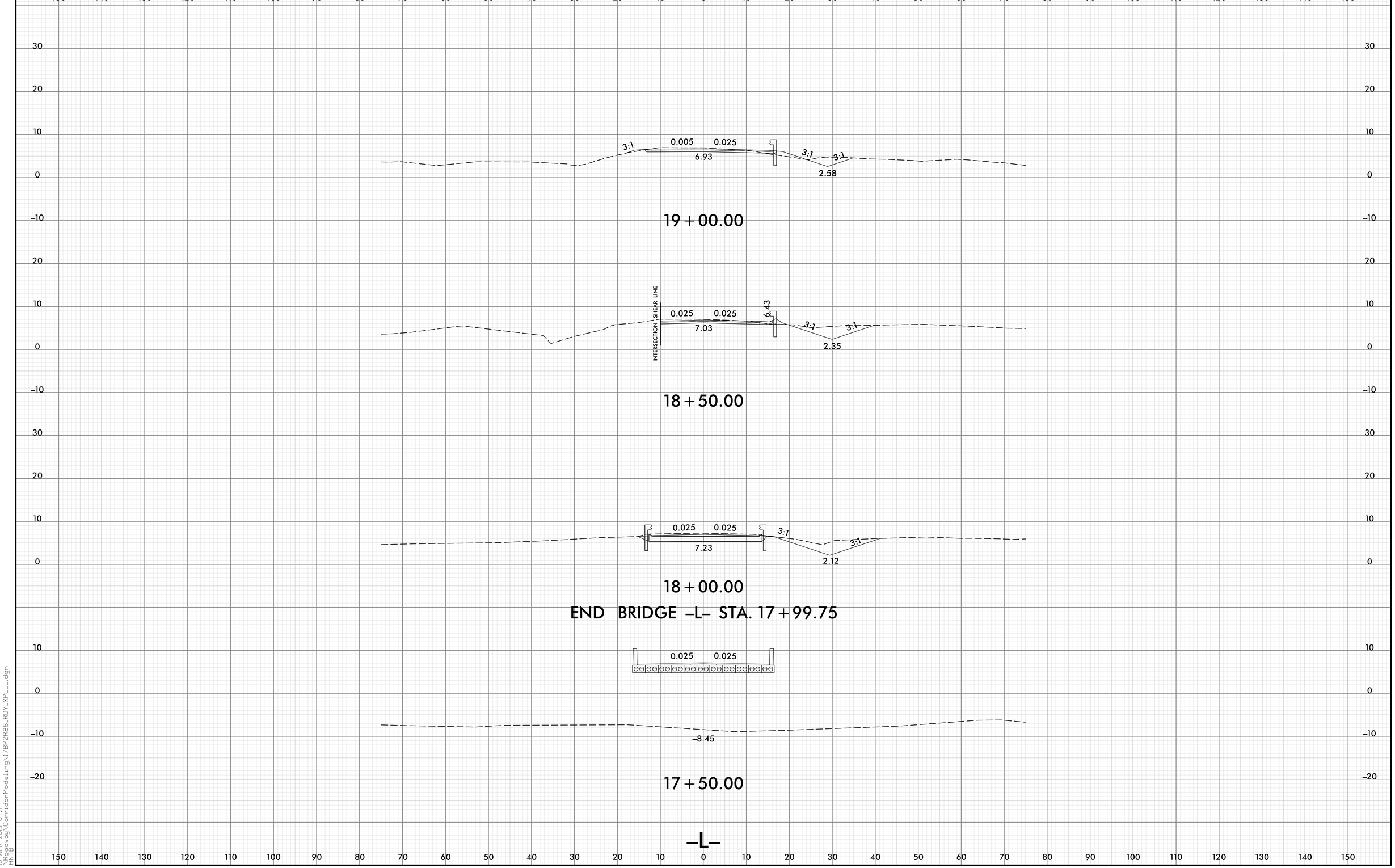

8/23/99

15-APR-2019 07:11
\Roadway\CorridorModeling\17BP2R86_RDY_XPL_L.dgn
INTB

0 2.5 5	PROJ. REFERENCE NO.	SHEET NO.
	17BP.2.R.86	X-5

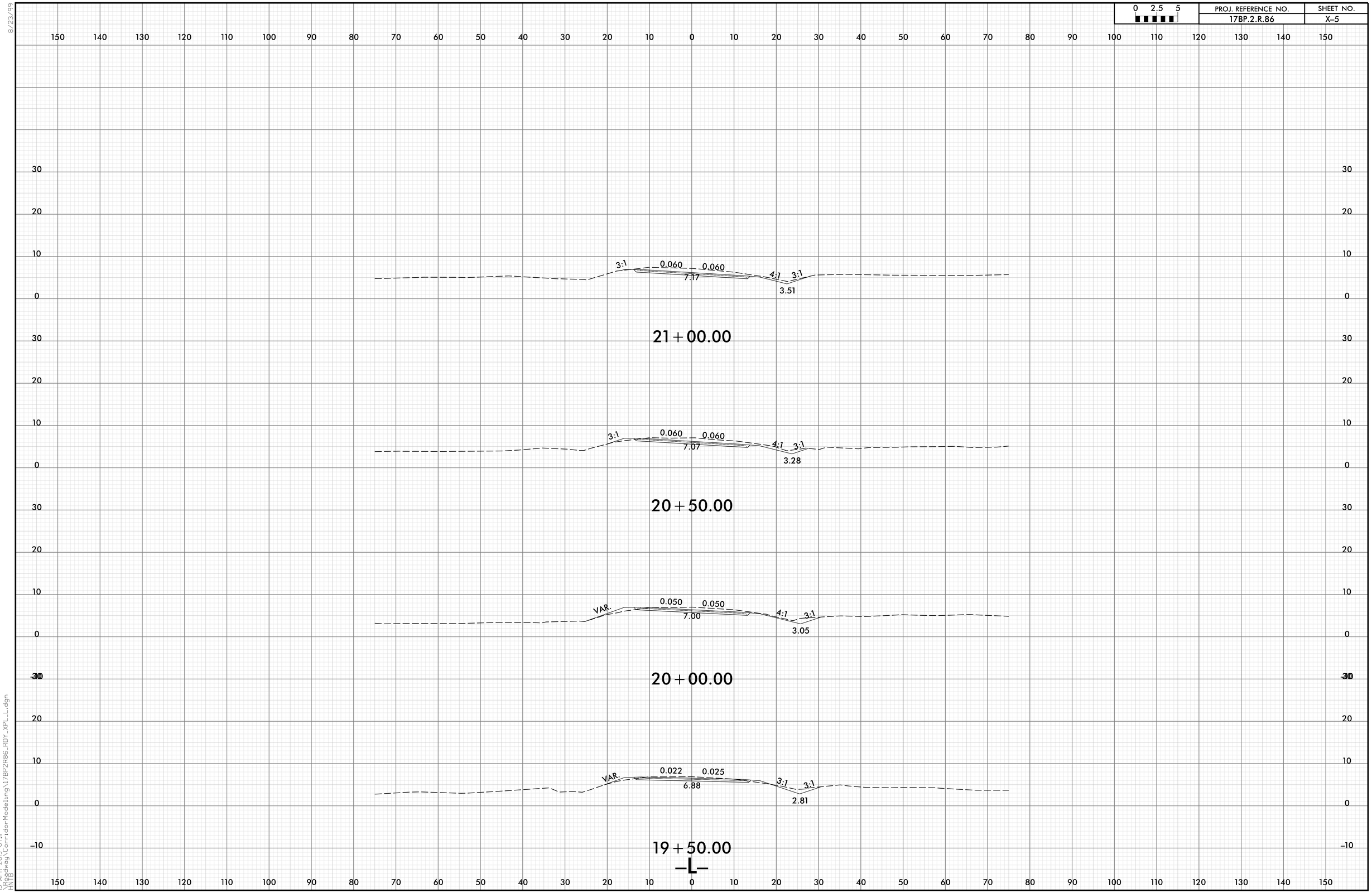

8/23/99

I5-APR-2019 07:11
\Roadway\CorridorModeling\17BP2R86_RDY_XPL_L.dgn
INTB

0 2.5 5	PROJ. REFERENCE NO.	SHEET NO.
	17BP.2.R.86	X-6

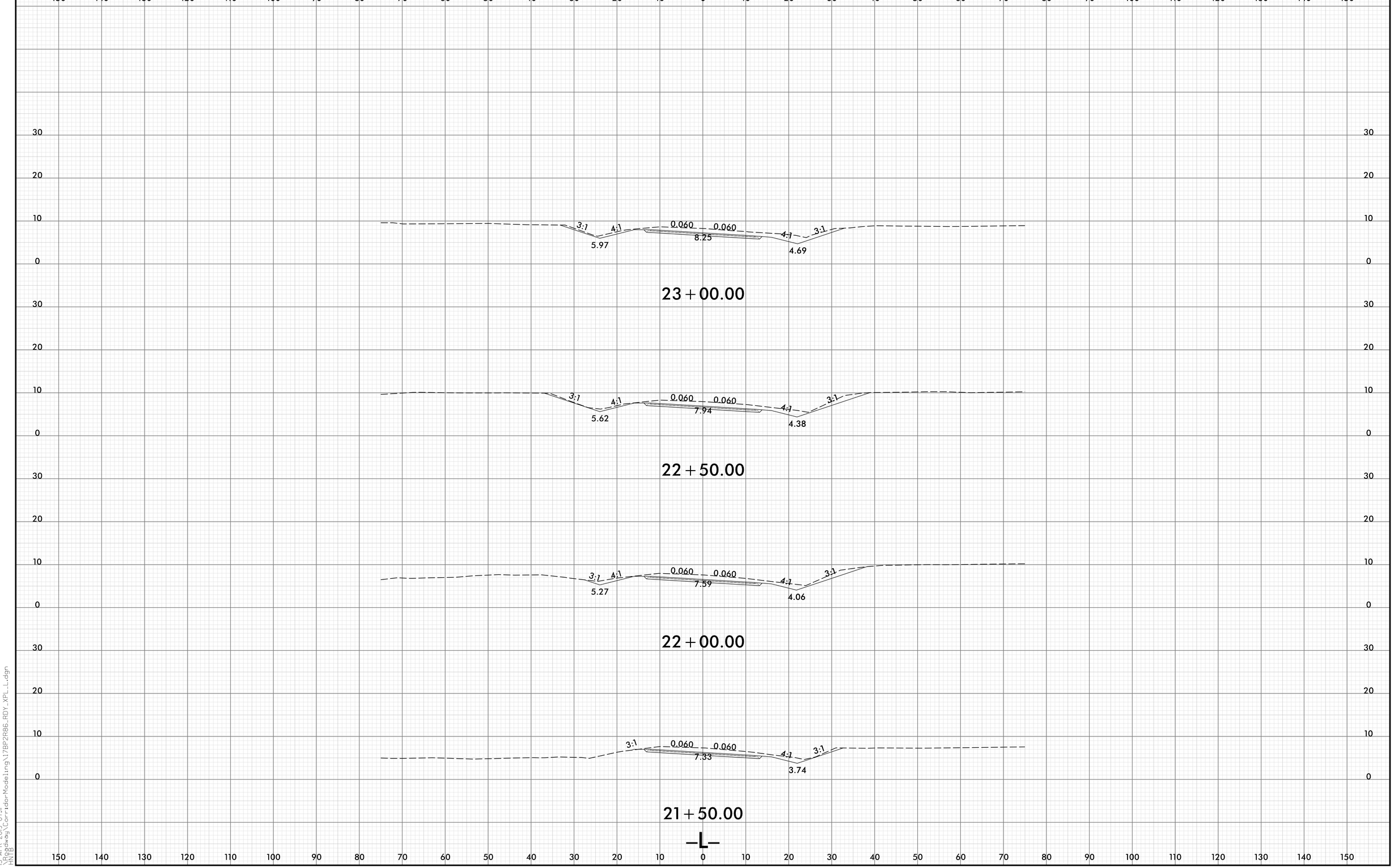

0 2.5 5	PROJ. REFERENCE NO.	SHEET NO.
	17BP.2.R.86	X-7

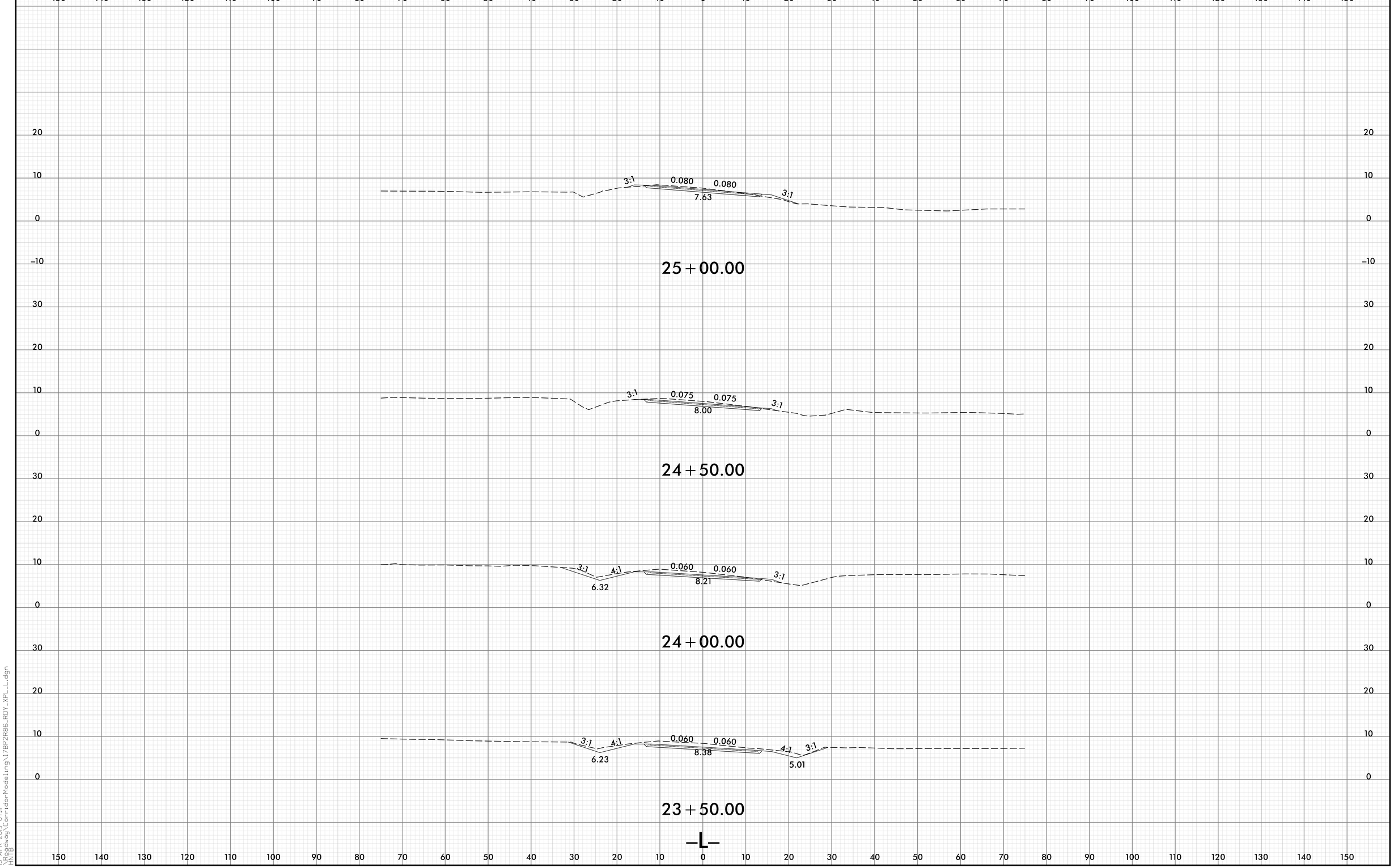

8/23/99

15-APR-2019 07:11
\Roadway\Corridor-Modeling\17BP2R86_RDY_XPL_L.dgn
INB

0 2.5 5	PROJ. REFERENCE NO.	SHEET NO.
	17BP.2.R.86	X-8

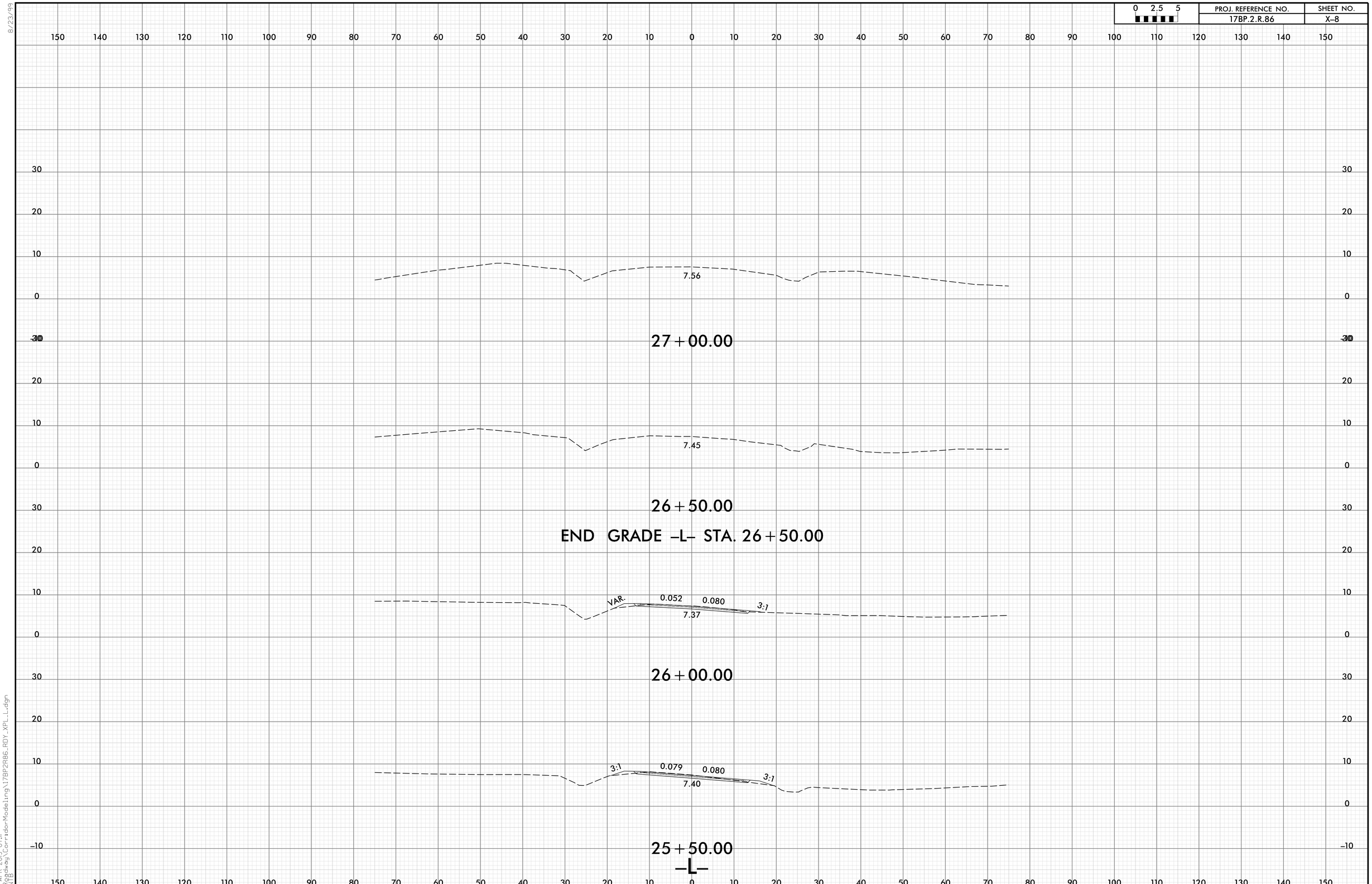

8/23/99

I5-APR-2019 07:11
\Roadway\CorridorModeling\17BP2R86_RDY_XPL_L.dgn
JWTB

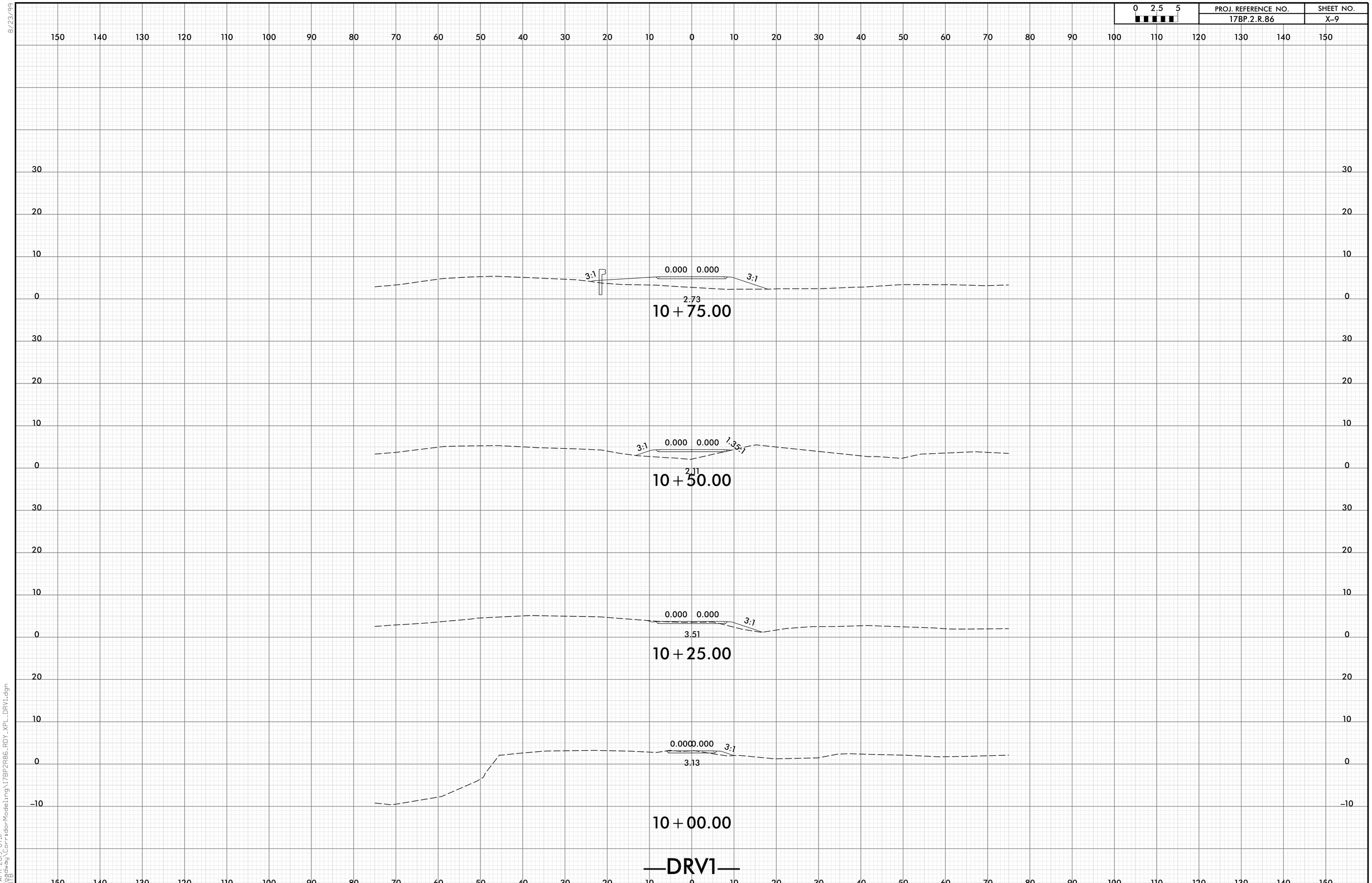

8/23/99

15-APR-2019 07:11
\Roadway\CorridorModeling\17BP2R86_RDY_XPL_DRV1.dgn
INTB

0 2.5 5	PROJ. REFERENCE NO.	SHEET NO.
	17BP.2.R.86	X-10

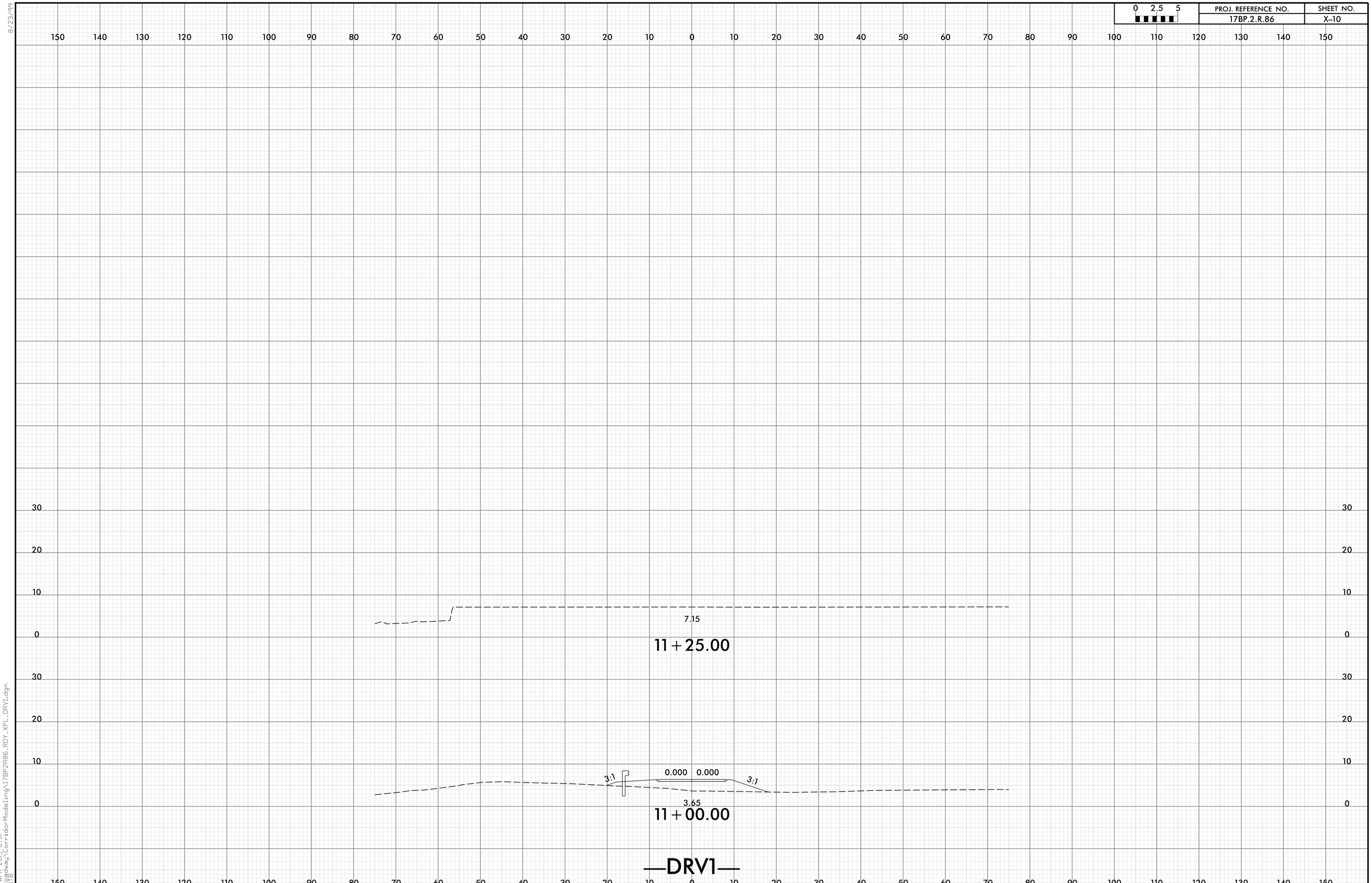

8/23/99

15-APR-2019 07:11
\Roadway\CorridorModeling\17BP2R86_RDY_XPL_DRV1.dgn
INTB

0 2.5 5	PROJ. REFERENCE NO.	SHEET NO.
	17BP.2.R.86	X-11

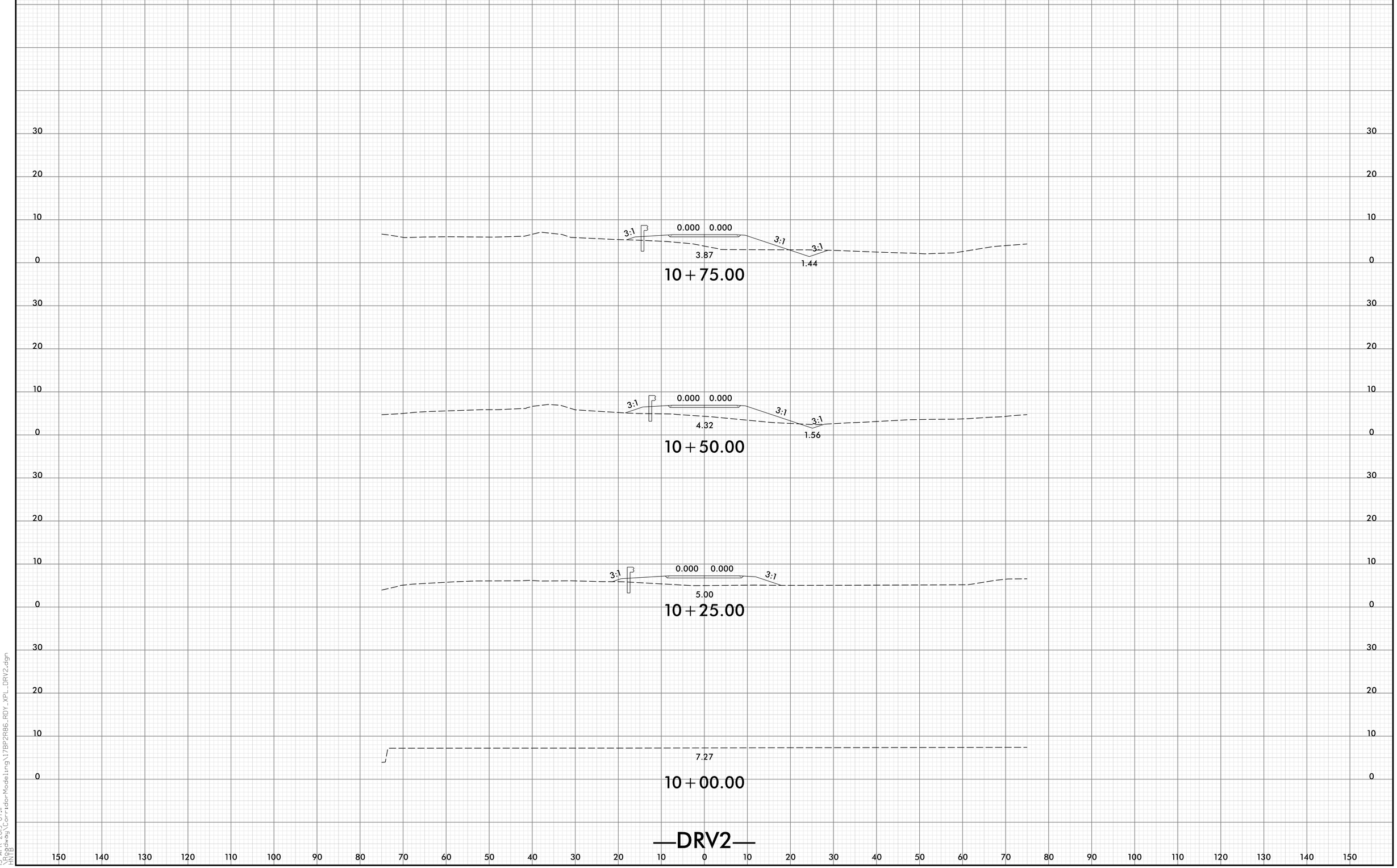

8/23/99

15-APR-2019 07:11
\Roadway\CorridorModeling\17BP2R86_RDY_XPL_DRV2.dgn
INTB

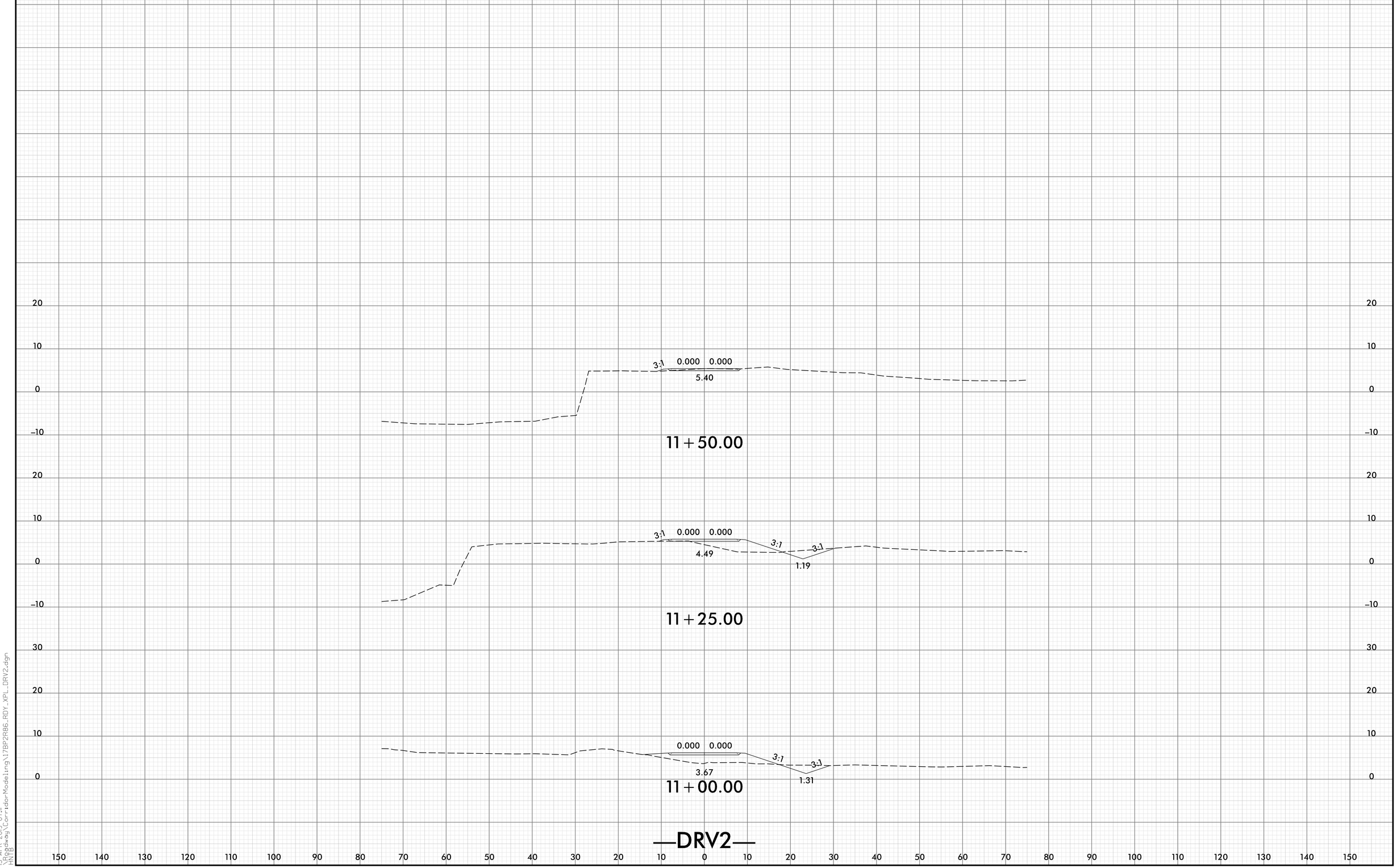

8/23/99
15-APR-2019 07:11
\Roadway\CorridorModeling\17BP2R86_RDY_XPL_DRV2.dgn
INTB

0 2.5 5	PROJ. REFERENCE NO.	SHEET NO.
	17BP.2.R.86	X–13

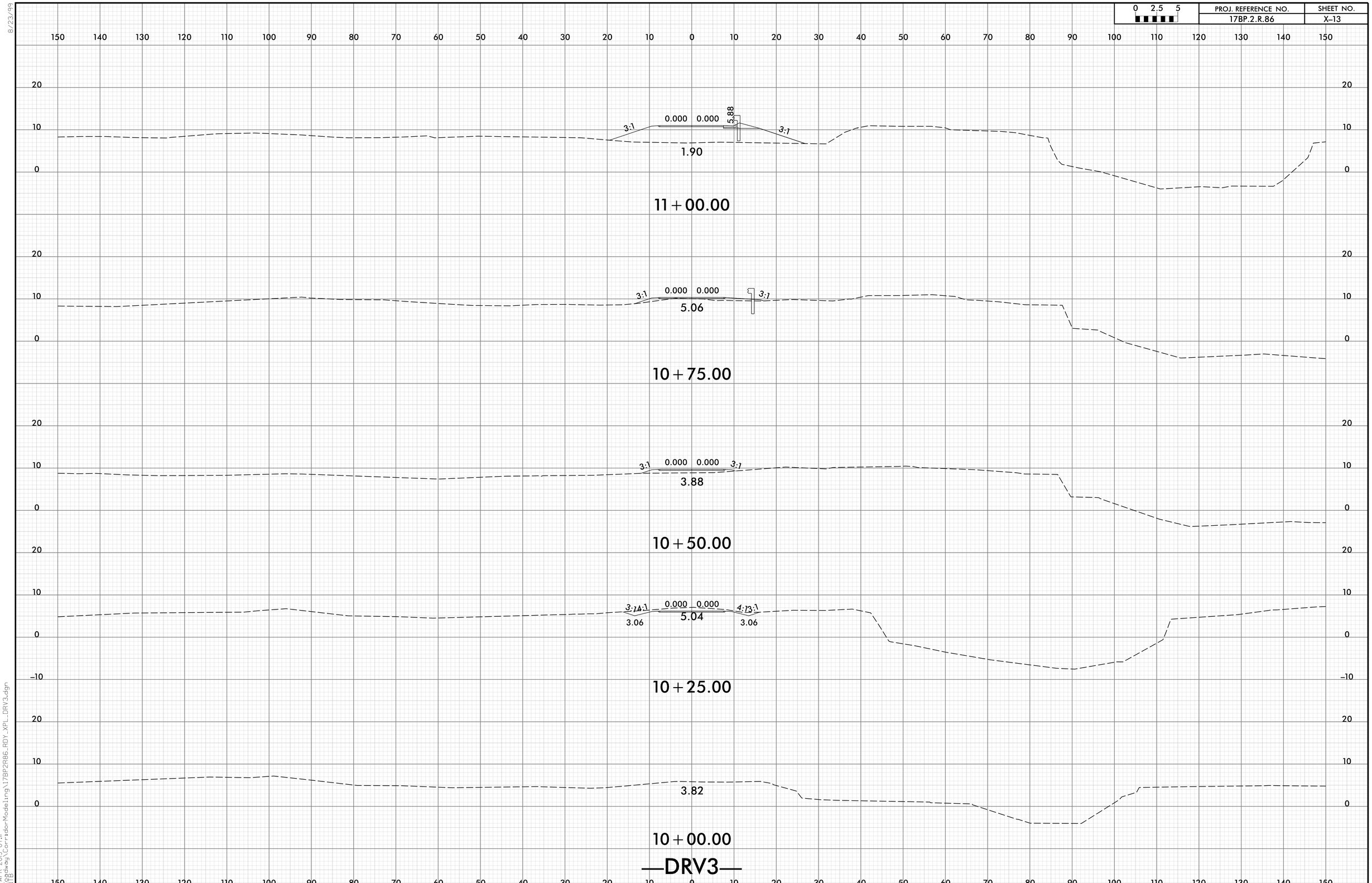

8/23/99

15-APR-2019 07:11
\Roadway\CorridorModeling\17BP2R86_RDY_XPL_DRV3.dgn
INTB

8/23/99

0 2.5 5	PROJ. REFERENCE NO.	SHEET NO.
	17BP.2.R.86	X-14

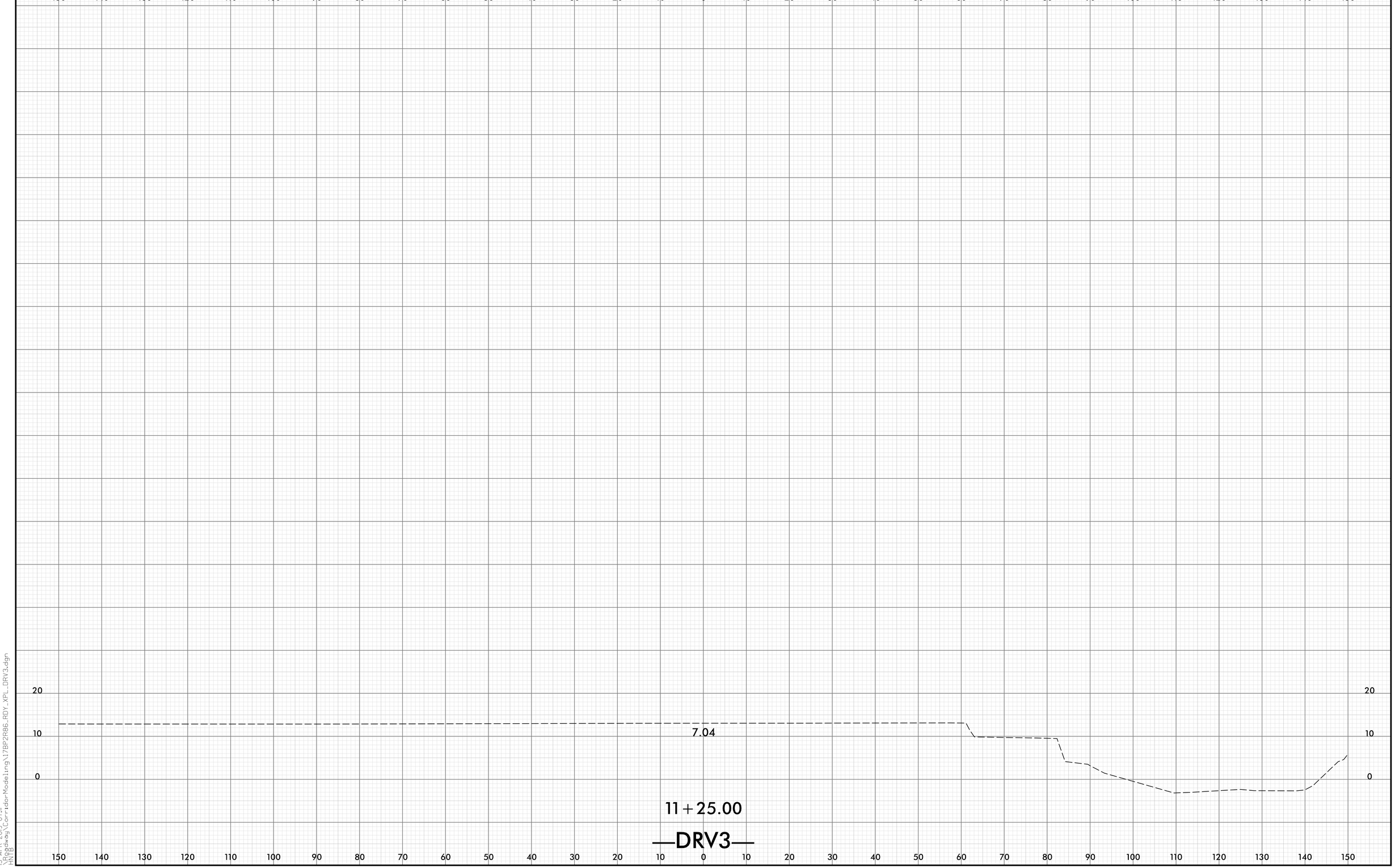

15-APR-2019 07:11
\Roadway\CorridorModeling\17BP2R86_RDY_XPL_DRV3.dgn
INTB

DocuSign Envelope ID: E0320412-C5FA-4DF1-9085-D274DF052AE7

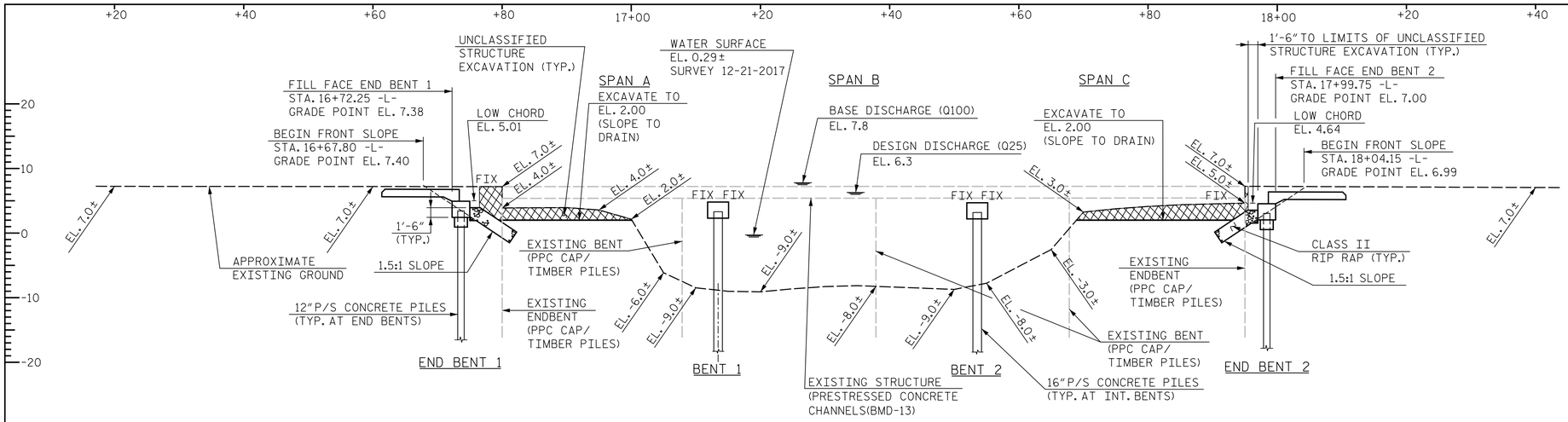

SECTION ALONG -L-

FOR GENERAL NOTES, SEE SHEET 2.

BRIDGE HYDRAULIC DATA

DESIGN DISCHARGE	=	3,609 CFS
FREQUENCY OF DESIGN FLOOD	=	25 YR
DESIGN HIGH WATER ELEVATION	=	6.3 FT.
DRAINAGE AREA	=	52.7 SQ. MI.
BASE DISCHARGE (Q100)	=	5,461 CFS
BASE HIGH WATER ELEVATION	=	7.8 FT.

OVERTOPPING FLOOD DATA

OVERTOPPING DISCHARGE	=	4,115 CFS
FREQUENCY OF OVERTOPPING FLOOD	=	> 25 YR (+)
OVERTOPPING FLOOD ELEVATION	=	6.68 FT.

NOTE: ROADWAY OVERTOPS AT STA. 19+10.00

PI STA. = 15+50.00
EL. = 7.75
VC = 150.00'

(+)0.3500% (-)0.3000%

GRADE DATA -L-

HORIZONTAL CURVE DATA -L-

PI Sta 18+03.53
D = 0° 59' 30.3"(RT)
D = 1° 00' 00.0"
L = 99.18'
T = 49.59'
R = 5,729.58'
V = 45 MPH
SE = NC
RO = N/A

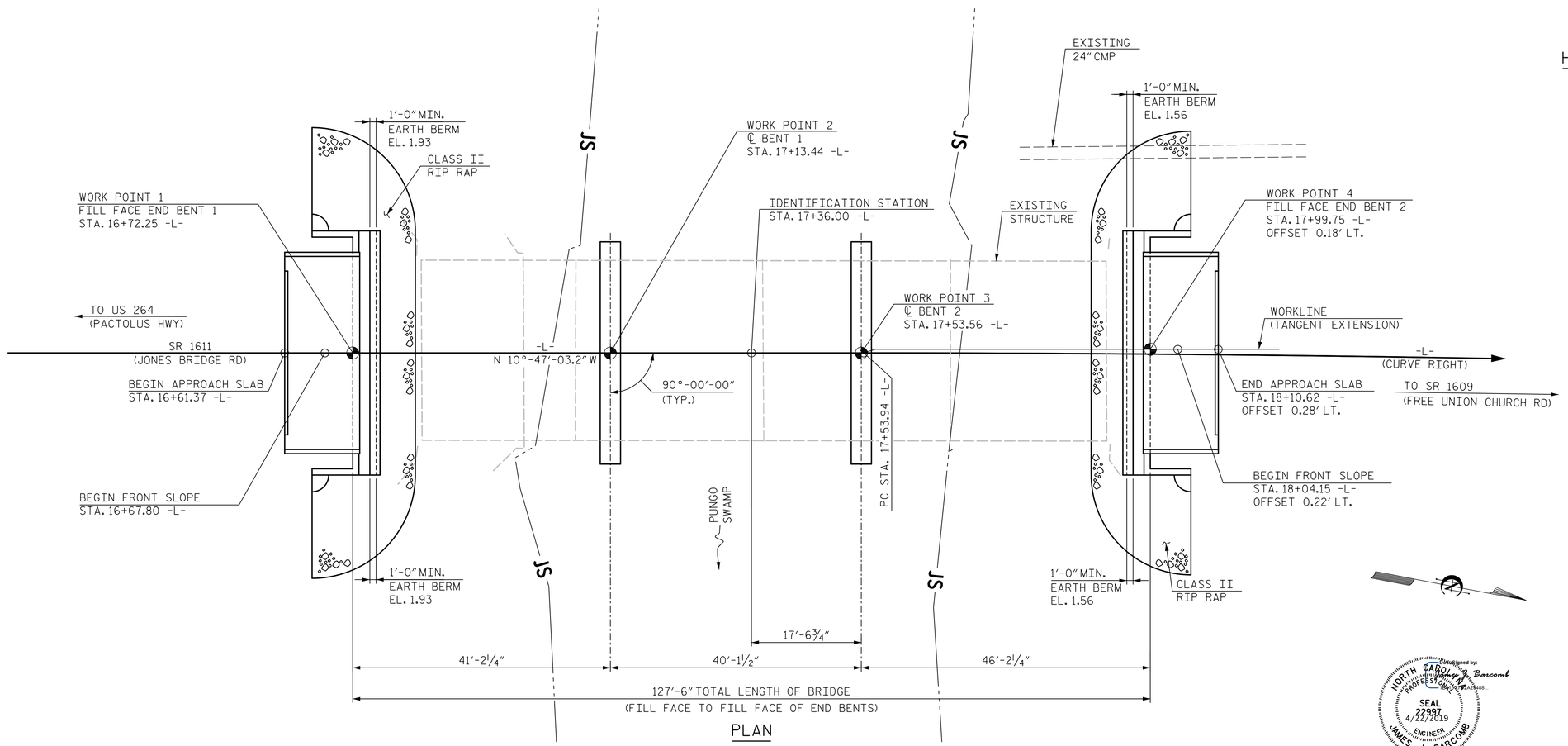

PLAN

PILES NOT SHOWN FOR CLARITY.

I HEREBY CERTIFY THESE PLANS ARE AS-BUILT PLANS

PROJECT NO. 17BP.2.R.86

BEAUFORT COUNTY

STATION: 17+36.00 -L-

SHEET 1 OF 2 REPLACES BRIDGE NO. 159

STATE OF NORTH CAROLINA
DEPARTMENT OF TRANSPORTATION
RALEIGH

GENERAL DRAWING
FOR BRIDGE ON SR 1611
OVER PUNGO SWAMP
BETWEEN
US 264 AND SR 1609

NORTH CAROLINA PROFESSIONAL SEAL 22997 ENGINEER JAMES J. BARCOMB 4/22/2019

DocuSigned by: James J. Barcomb

HNTB NORTH CAROLINA, P.C.
NC License No. C-1554
343 E. Six Forks Rd., Suite 200, Raleigh, N.C. 27609

DRAWN BY M. WRIGHT DATE 1/19
CHECKED BY J. BARCOMB DATE 4/19
DESIGN ENGINEER OF RECORD J. BARCOMB DATE 4/19

DWG. NO. 1

DOCUMENT NOT CONSIDERED FINAL UNLESS ALL SIGNATURES COMPLETED

REVISIONS						SHEET NO.
NO.	BY	DATE	NO.	BY	DATE	S-1
1			3			TOTAL SHEETS
2			4			20

DocuSign Envelope ID: E0320412-C5FA-4DF1-9085-D274DF052AE7

BM: "BM10" - RR SPIKE SET IN BASE OF 10" ELM, 245.88' RT. OF STA. 16+80.20 -L-, EL. 4.46
NAVD88 N: 657439 E: 2662383

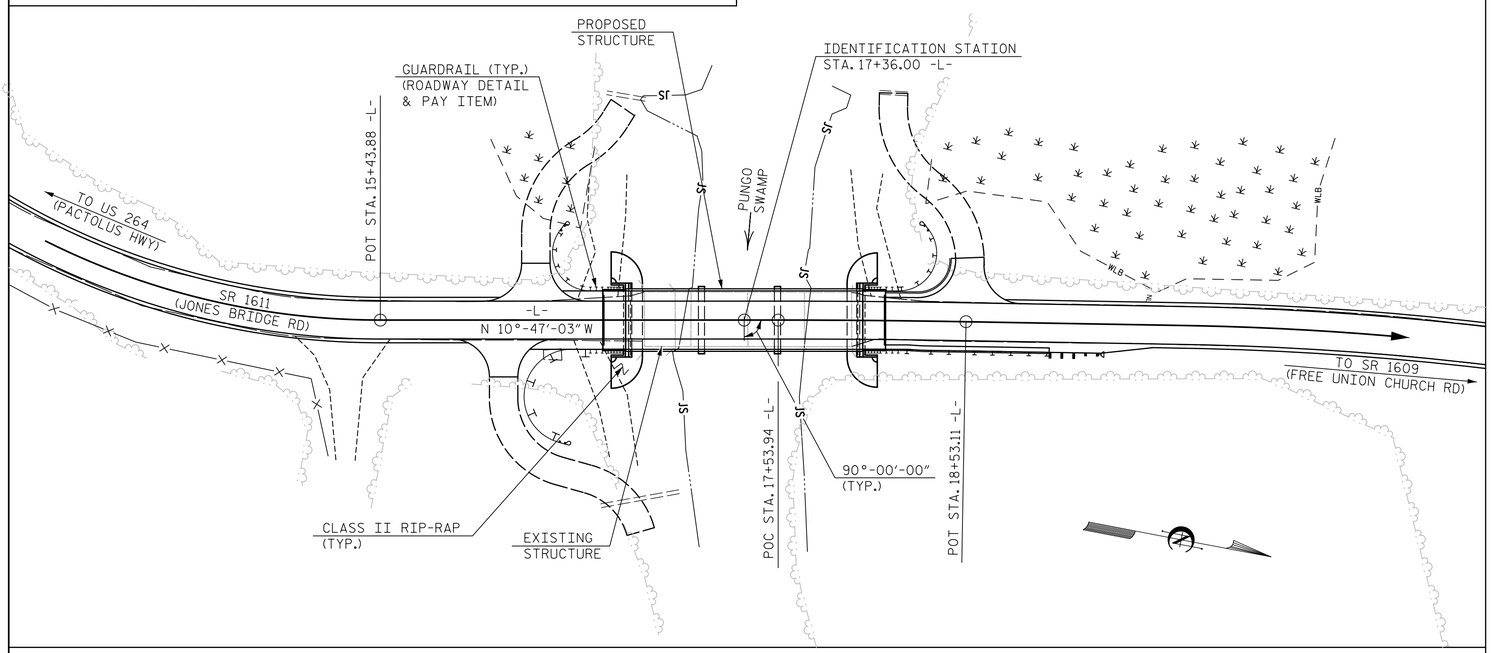

LOCATION SKETCH

FOR UTILITY INFORMATION, SEE UTILITY PLANS AND SPECIAL PROVISIONS.

FOUNDATION NOTES:

FOR PILES, SEE SECTION 450 OF THE STANDARD SPECIFICATIONS.

PILES AT END BENT NO. 1 ARE DESIGNED FOR A FACTORED RESISTANCE OF 59 TONS PER PILE.

PILES AT BENT NO. 1 ARE DESIGNED FOR A FACTORED RESISTANCE OF 90 TONS PER PILE.

PILES AT BENT NO. 2 ARE DESIGNED FOR A FACTORED RESISTANCE OF 105 TONS PER PILE.

PILES AT END BENT NO. 2 ARE DESIGNED FOR A FACTORED RESISTANCE OF 61 TONS PER PILE.

DRIVE PILES AT END BENT NO. 1 TO A REQUIRED DRIVING RESISTANCE OF 100 TONS PER PILE.

DRIVE PILES AT BENT NO. 1 TO A REQUIRED DRIVING RESISTANCE OF 160 TONS PER PILE. THIS REQUIRED DRIVING RESISTANCE INCLUDES ADDITIONAL RESISTANCE FOR DOWNDRAG OR SCOUR.

DRIVE PILES AT BENT NO. 2 TO A REQUIRED DRIVING RESISTANCE OF 190 TONS PER PILE. THIS REQUIRED DRIVING RESISTANCE INCLUDES ADDITIONAL RESISTANCE FOR DOWNDRAG OR SCOUR.

DRIVE PILES AT END BENT NO. 2 TO A REQUIRED DRIVING RESISTANCE OF 105 TONS PER PILE.

INSTALL PILES AT BENT NO. 1 AND BENT NO. 2 TO A TIP ELEVATION NO HIGHER THAN -36.0 FT.

THE SCOUR CRITICAL ELEVATION FOR BENT NO. 1 IS ELEVATION -19.0 FT. SCOUR CRITICAL ELEVATIONS ARE USED TO MONITOR POSSIBLE SCOUR PROBLEMS DURING THE LIFE OF THE STRUCTURE.

THE SCOUR CRITICAL ELEVATION FOR BENT NO. 2 IS ELEVATION -19.0 FT. SCOUR CRITICAL ELEVATIONS ARE USED TO MONITOR POSSIBLE SCOUR PROBLEMS DURING THE LIFE OF THE STRUCTURE.

TESTING PILES WITH THE PDA DURING DRIVING, RESTRIKING OR REDRIVING MAY BE REQUIRED. THE ENGINER WILL DETERMINE THE NEED FOR PDA TESTING. FOR PDA TESTING, SEE SECTION 450 OF THE STANDARD SPECIFICATIONS.

TOTAL BILL OF MATERIAL

	REMOVAL OF EXISTING STRUCTURE AT STATION 17+36.00 -L-	ASBESTOS ASSESSMENT	PDA TESTING	UNCLASSIFIED STRUCTURE EXCAVATION AT STATION 17+36.00 -L-	CLASS A CONCRETE	BRIDGE APPROACH SLABS AT STATION 17+36.00 -L-	REINFORCING STEEL	PILE DRIVING EQUIPMENT SETUP FOR 12" PRESTRESSED CONCRETE PILES	PILE DRIVING EQUIPMENT SETUP FOR 16" PRESTRESSED CONCRETE PILES	12" PRESTRESSED CONCRETE PILES		16" PRESTRESSED CONCRETE PILES		PILE REDRIVES	VERTICAL CONCRETE BARRIER RAIL	RIP RAP CLASS II (2'-0" THICK)	GEOTEXTILE FOR DRAINAGE	ELASTOMERIC BEARINGS	3'-0"x1'-9" PRESTRESSED CONCRETE CORED SLABS	
	LUMP SUM	LUMP SUM	EACH	LUMP SUM	CU. YDS.	LUMP SUM	LBS.	EACH	EACH	NO.	LIN. FT.	NO.	LIN. FT.	EACH	LIN. FT.	TONS	SQ. YDS.	LUMP SUM	NO.	LIN. FT.
SUPERSTRUCTURE	LUMP SUM	—	—	—	—	LUMP SUM	—	—	—	—	—	—	—	—	250.75	—	—	LUMP SUM	33	1,375
END BENT 1	—	—	—	LUMP SUM	12.7	—	2115	7	—	7	315	—	—	4	—	125	140	—	—	—
BENT 1	—	—	—	LUMP SUM	10.2	—	2,121	—	7	—	—	7	315	4	—	—	—	—	—	—
BENT 2	—	—	—	LUMP SUM	10.2	—	2,121		7	—	—	7	315	4	—	—	—	—	—	—
END BENT 2	—	—	—	LUMP SUM	12.7	—	2115	7	—	7	315	—	—	4	—	115	130	—	—	—
TOTAL	LUMP SUM	LUMP SUM	2	LUMP SUM	45.8	LUMP SUM	8472	14	14	14	630	7	630	16	250.75	240	270	LUMP SUM	33	1,375

GENERAL NOTES

ASSUMED LIVE LOAD = HL-93 OR ALTERNATE LOADING.

THIS BRIDGE HAS BEEN DESIGNED IN ACCORDANCE WITH THE AASHTO LRFD BRIDGE DESIGN SPECIFICATIONS.

THIS BRIDGE IS LOCATED IN SEISMIC ZONE 1.

THIS BRIDGE SHALL BE CONSTRUCTED USING TOP-DOWN CONSTRUCTION METHODS. THE USE OF A TEMPORARY CAUSEWAY OR WORK BRIDGE IS NOT PERMITTED.

FOR OTHER DESIGN DATA AND GENERAL NOTES, SEE SHEET SN.

FOR SUBMITTAL OF WORKING DRAWINGS, SEE SPECIAL PROVISIONS.

FOR FALSEWORK AND FORMWORK, SEE SPECIAL PROVISIONS.

FOR CRANE SAFETY, SEE SPECIAL PROVISIONS.

FOR GROUT FOR STRUCTURES, SEE SPECIAL PROVISIONS.

THE MATERIAL SHOWN IN THE CROSS-HATCHED AREA SHALL BE EXCAVATED FOR A DISTANCE OF 19.5 FT. ON EACH SIDE OF CENTERLINE BRIDGE AS DIRECTED BY THE ENGINEER. THIS WORK WILL BE PAID FOR AT THE CONTRACT LUMP SUM PRICE FOR UNCLASSIFIED STRUCTURE EXCAVATION. SEE SECTION 412 OF THE STANDARD SPECIFICATIONS.

THE EXISTING TWO SPAN STRUCTURE WITH SPAN LENGTHS OF 1 @ 37'-0", AND 1 @ 37'-3" WITH REINFORCED CONCRETE DECK WITH TWO THRU GIRDERS WITH A 24'-1" OUT TO OUT DECK WIDTH ON REINFORCED CONCRETE ABUTMENTS AND PIER ON STEEL PILES SHALL BE REMOVED. IN ADDITION, ANY PILES REMAINING FROM PREVIOUS BRIDGE CONSTRUCTION OR MAINTENANCE OPERATIONS SHALL BE REMOVED AND INCLUDED IN THE LUMP SUM PAY ITEM FOR "REMOVAL OF EXISTING STRUCTURE AT STATION 15+36.00 -L-"

THE SUBSTRUCTURE OF THE EXISTING BRIDGE INDICATED ON THE PLANS IS FROM THE BEST INFORMATION AVAILABLE. SINCE THIS INFORMATION IS SHOWN FOR THE CONVENIENCE OF THE CONTRACTOR, THE CONTRACTOR SHALL HAVE NO CLAIM WHATSOEVER AGAINST THE DEPARTMENT OF TRANSPORTATION FOR ANY DELAYS OR ADDITIONAL COST INCURRED BASED ON DIFFERENCES BETWEEN THE EXISTING BRIDGE SUBSTRUCTURE SHOWN ON THE PLANS AND THE ACTUAL CONDITIONS AT THE PROJECT SITE.

REMOVAL OF THE EXISTING BRIDGE SHALL BE PERFORMED SO AS NOT TO ALLOW DEBRIS TO FALL INTO THE WATER. THE CONTRACTOR SHALL REMOVE THE BRIDGE AND SUBMIT PLANS FOR DEMOLITION IN ACCORDANCE WITH ARTICLE 402-2 OF THE STANDARD SPECIFICATIONS.

THIS STRUCTURE HAS BEEN DESIGNED IN ACCORDANCE WITH "HEC 18 - EVALUATING SCOUR AT BRIDGES."

FOR EROSION CONTROL MEASURES SEE EROSION CONTROL PLANS.

ASPHALT WEARING SURFACE IS INCLUDED IN ROADWAY QUANTITY ON ROADWAY PLANS.

FOR ASBESTOS ASSESSMENT FOR BRIDGE DEMOLITION AND RENOVATION ACTIVITIES, SEE SPECIAL PROVISIONS.

PROJECT NO. 17BP.2.R.86
BEAUFORT COUNTY
STATION: 17+36.00 -L-

SHEET 2 OF 2

NORTH CAROLINA PROFESSIONAL ENGINEER SEAL 22997 4/22/2019 JAMES J. BARCOMB
Digitally signed by James J. Barcomb

DOCUMENT NOT CONSIDERED FINAL UNLESS ALL SIGNATURES COMPLETED

HNTB NORTH CAROLINA, P.C.
NC License No. C-1554
343 E. Six Forks Rd., Suite 200, Raleigh, N.C. 27609

DRAWN BY M. WRIGHT DATE 1/19
CHECKED BY J. BARCOMB DATE 4/19
DESIGN ENGINEER OF RECORD J. BARCOMB DATE 4/19

DWG. NO. 2

STATE OF NORTH CAROLINA
DEPARTMENT OF TRANSPORTATION
RALEIGH

GENERAL DRAWING
FOR BRIDGE ON SR 1002
OVER PUNGO SWAMP
BETWEEN
US 264 AND SR 1609

REVISIONS						SHEET NO.
NO.	BY	DATE	NO.	BY	DATE	S-2
1			3			TOTAL SHEETS
2			4			20

DocuSign Envelope ID: E0320412-C5FA-4DF1-9085-D274DF052AE7

LOAD AND RESISTANCE FACTOR RATING (LRFD) SUMMARY FOR PRESTRESSED CONCRETE GIRDERS

LEVEL		VEHICLE	WEIGHT (W) (TONS)	CONTROLLING LOAD RATING	MINIMUM RATING FACTORS (RF)	TONS = W X RF	STRENGTH I LIMIT STATE											SERVICE III LIMIT STATE						COMMENT NUMBER
								MOMENT					SHEAR						MOMENT					
							LIVELOAD FACTORS	DISTRIBUTION FACTORS (DF)	RATING FACTOR	SPAN	GIRDER LOCATION	DISTANCE FROM LEFT END OF SPAN (ft)	DISTRIBUTION FACTORS (DF)	RATING FACTOR	SPAN	GIRDER LOCATION	DISTANCE FROM LEFT END OF SPAN (ft)	LIVELOAD FACTORS	DISTRIBUTION FACTORS (DF)	RATING FACTOR	SPAN	GIRDER LOCATION	DISTANCE FROM LEFT END OF SPAN (ft)	
DESIGN LOAD RATING		HL-93(Inv)	N/A	1	1.319	--	1.75	0.278	1.76	40′	EL	19.5	0.549	1.32	40′	EL	1.95	0.80	0.278	1.55	40′	EL	19.5	
		HL-93(Opr)	N/A	--	1.709	--	1.35	0.278	2.28	40′	EL	19.5	0.549	1.71	40′	EL	1.95	N/A	--	--	--	--	--	
		HS-20(Inv)	36.000	2	1.540	55.449	1.75	0.278	2.21	40′	EL	19.5	0.549	1.54	40′	EL	1.95	0.80	0.278	1.94	40′	EL	19.5	
		HS-20(Opr)	36.000	--	1.997	71.878	1.35	0.278	2.86	40′	EL	19.5	0.549	2	40′	EL	1.95	N/A	--	--	--	--	--	
LEGAL LOAD RATING	SV	SNSH	13.500	--	3.606	48.687	1.4	0.278	5.1	40′	EL	19.5	0.549	4.13	40′	EL	1.95	0.80	0.278	3.61	40′	EL	19.5	
		SNGARBS2	20.000	--	2.964	59.289	1.4	0.278	4.19	40′	EL	15.6	0.549	3.07	40′	EL	1.95	0.80	0.278	2.96	40′	EL	19.5	
		SNAGRIS2	22.000	--	2.906	63.929	1.4	0.278	4.09	40′	EL	15.6	0.549	2.91	40′	EL	1.95	0.80	0.278	2.92	40′	EL	15.6	
		SNCOTTS3	27.250	--	1.803	49.125	1.4	0.278	2.55	40′	EL	19.5	0.549	2.07	40′	EL	1.95	0.80	0.278	1.80	40′	EL	19.5	
		SNAGGRS4	34.925	--	1.623	56.667	1.4	0.278	2.29	40′	EL	19.5	0.549	1.82	40′	EL	1.95	0.80	0.278	1.62	40′	EL	19.5	
		SNS5A	35.550	--	1.578	56.107	1.4	0.278	2.23	40′	EL	19.5	0.549	1.9	40′	EL	1.95	0.80	0.278	1.58	40′	EL	19.5	
		SNS6A	39.950	--	1.502	59.992	1.4	0.278	2.12	40′	EL	19.5	0.549	1.77	40′	EL	1.95	0.80	0.278	1.50	40′	EL	19.5	
		SNS7B	42.000	3	1.432	60.149	1.4	0.278	2.02	40′	EL	19.5	0.549	1.81	40′	EL	1.95	0.80	0.278	1.43	40′	EL	19.5	
	TTST	TNAGRIT3	33.000	--	1.848	60.976	1.4	0.278	2.61	40′	EL	19.5	0.549	2.08	40′	EL	1.95	0.80	0.278	1.85	40′	EL	19.5	
		TNT4A	33.075	--	1.872	61.901	1.4	0.278	2.65	40′	EL	19.5	0.549	1.98	40′	EL	1.95	0.80	0.278	1.87	40′	EL	19.5	
		TNT6A	41.600	--	1.587	66.032	1.4	0.278	2.24	40′	EL	19.5	0.549	1.94	40′	EL	1.95	0.80	0.278	1.59	40′	EL	19.5	
		TNT7A	42.000	--	1.627	68.354	1.4	0.278	2.3	40′	EL	19.5	0.549	1.79	40′	EL	1.95	0.80	0.278	1.63	40′	EL	19.5	
		TNT7B	42.000	--	1.664	69.888	1.4	0.278	2.35	40′	EL	19.5	0.549	1.72	40′	EL	1.95	0.80	0.278	1.66	40′	EL	19.5	
		TNAGRIT4	43.000	--	1.619	69.61	1.4	0.278	2.28	40′	EL	15.6	0.549	1.65	40′	EL	1.95	0.80	0.278	1.62	40′	EL	19.5	
		TNAGT5A	45.000	--	1.498	67.412	1.4	0.278	2.12	40′	EL	19.5	0.549	1.71	40′	EL	1.95	0.80	0.278	1.50	40′	EL	19.5	
		TNAGT5B	45.000	--	1.455	65.486	1.4	0.278	2.06	40′	EL	19.5	0.549	1.56	40′	EL	1.95	0.80	0.278	1.46	40′	EL	19.5	

LOAD FACTORS:

	LIMIT STATE	γ_{DC}	γ_{DW}
DESIGN LOAD RATING FACTORS	STRENGTH I	1.25	1.50
	SERVICE III	1.00	1.00

NOTES:

MINIMUM RATING FACTORS ARE BASED ON THE STRENGTH I AND SERVICE III LIMIT STATES.

ALLOWABLE STRESSES FOR SERVICE III LIMIT STATE ARE AS REQUIRED FOR DESIGN.

COMMENTS:

1.
2.
3.
4.

(#) CONTROLLING LOAD RATING

(1) DESIGN LOAD RATING (HL-93)

(2) DESIGN LOAD RATING (HS-20)

(3) LEGAL LOAD RATING **

** SEE CHART FOR VEHICLE TYPE

GIRDER LOCATION

I - INTERIOR GIRDER
EL - EXTERIOR LEFT GIRDER
ER - EXTERIOR RIGHT GIRDER

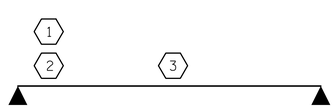

LRFR SUMMARY

FOR SPANS 'A' & 'B'

PROJECT NO. 17BP.2.R.86

BEAUFORT COUNTY

STATION: 17+36.00 -L-

SHEET 1 OF 2

STATE OF NORTH CAROLINA
DEPARTMENT OF TRANSPORTATION
RALEIGH

STANDARD
LRFR SUMMARY FOR
40′ CORED SLAB UNIT
90° SKEW
(NON-INTERSTATE TRAFFIC)

NORTH CAROLINA PROFESSIONAL SEAL 22997 ENGINEER JAMES J. BARCOMB
DocuSigned by: James J. Barcomb
4/22/2019

REVISIONS						SHEET NO.
NO.	BY	DATE	NO.	BY	DATE	S-3
1			3			TOTAL SHEETS
2			4			20

HNTB NORTH CAROLINA, P.C.
NC License No. C-1554
343 E. Six Forks Rd., Suite 200, Raleigh, N.C. 27609

DRAWN BY D. WITHERSPOON DATE 3/19
CHECKED BY J. BARCOMB DATE 4/19
DESIGN ENGINEER OF RECORD J. BARCOMB DATE 4/19

DWG. NO. 3

ASSEMBLED BY : D. WITHERSPOON DATE : 3/19
CHECKED BY : J. BARCOMB DATE : 4/19

DRAWN BY : CVC 6/10
CHECKED BY : DNS 6/10

DOCUMENT NOT CONSIDERED FINAL UNLESS ALL SIGNATURES COMPLETED

STD. NO. 21LRFR1_90S_40L

DocuSign Envelope ID: E0320412-C5FA-4DF1-9085-D274DF052AE7

LOAD AND RESISTANCE FACTOR RATING (LRFD) SUMMARY FOR PRESTRESSED CONCRETE GIRDERS

LEVEL		VEHICLE	WEIGHT (W) (TONS)	CONTROLLING LOAD RATING	MINIMUM RATING FACTORS (RF)	TONS = W X RF	STRENGTH I LIMIT STATE											SERVICE III LIMIT STATE						COMMENT NUMBER
								MOMENT					SHEAR						MOMENT					
							LIVELOAD FACTORS	DISTRIBUTION FACTORS (DF)	RATING FACTOR	SPAN	GIRDER LOCATION	DISTANCE FROM LEFT END OF SPAN (ft)	DISTRIBUTION FACTORS (DF)	RATING FACTOR	SPAN	GIRDER LOCATION	DISTANCE FROM LEFT END OF SPAN (ft)	LIVELOAD FACTORS	DISTRIBUTION FACTORS (DF)	RATING FACTOR	SPAN	GIRDER LOCATION	DISTANCE FROM LEFT END OF SPAN (ft)	
DESIGN LOAD RATING		HL-93(Inv)	N/A	1	1.088	--	1.75	0.277	1.34	45'	EL	22	0.539	1.23	45'	EL	2.2	0.80	0.277	1.09	45'	EL	22	
		HL-93(Opr)	N/A	--	1.590	--	1.35	0.277	1.74	45'	EL	22	0.539	1.59	45'	EL	2.2	N/A	--	--	--	--	--	
		HS-20(Inv)	36.000	2	1.336	48.104	1.75	0.277	1.65	45'	EL	22	0.539	1.45	45'	EL	2.2	0.80	0.277	1.34	45'	EL	22	
		HS-20(Opr)	36.000	--	1.882	67.763	1.35	0.277	2.14	45'	EL	22	0.539	1.88	45'	EL	2.2	N/A	--	--	--	--	--	
LEGAL LOAD RATING	SV	SNSH	13.500	--	2.611	35.252	1.4	0.277	4.02	45'	EL	22	0.539	4.01	45'	EL	2.2	0.80	0.277	2.61	45'	EL	22	
		SNGARBS2	20.000	--	2.108	42.166	1.4	0.277	3.25	45'	EL	22	0.539	2.94	45'	EL	2.2	0.80	0.277	2.11	45'	EL	22	
		SNAGRIS2	22.000	--	2.067	45.466	1.4	0.277	3.15	45'	EL	17.6	0.539	2.77	45'	EL	2.2	0.80	0.277	2.07	45'	EL	22	
		SNCOTTS3	27.250	--	1.304	35.527	1.4	0.277	2.01	45'	EL	22	0.539	2.01	45'	EL	2.2	0.80	0.277	1.30	45'	EL	22	
		SNAGGRS4	34.925	--	1.150	40.181	1.4	0.277	1.77	45'	EL	22	0.539	1.74	45'	EL	2.2	0.80	0.277	1.15	45'	EL	22	
		SNS5A	35.550	--	1.121	39.841	1.4	0.277	1.73	45'	EL	22	0.539	1.79	45'	EL	2.2	0.80	0.277	1.12	45'	EL	22	
		SNS6A	39.950	--	1.056	42.175	1.4	0.277	1.63	45'	EL	22	0.539	1.67	45'	EL	2.2	0.80	0.277	1.06	45'	EL	22	
		SNS7B	42.000	3	1.006	42.268	1.4	0.277	1.55	45'	EL	22	0.539	1.68	45'	EL	2.2	0.80	0.277	1.01	45'	EL	22	
	TTST	TNAGRIT3	33.000	--	1.296	42.759	1.4	0.277	2	45'	EL	22	0.539	1.96	45'	EL	2.2	0.80	0.277	1.30	45'	EL	22	
		TNT4A	33.075	--	1.309	43.305	1.4	0.277	2.02	45'	EL	22	0.539	1.88	45'	EL	2.2	0.80	0.277	1.31	45'	EL	22	
		TNT6A	41.600	--	1.099	45.712	1.4	0.277	1.69	45'	EL	22	0.539	1.83	45'	EL	2.2	0.80	0.277	1.10	45'	EL	22	
		TNT7A	42.000	--	1.120	47.043	1.4	0.277	1.73	45'	EL	22	0.539	1.69	45'	EL	2.2	0.80	0.277	1.12	45'	EL	22	
		TNT7B	42.000	--	1.166	48.975	1.4	0.277	1.8	45'	EL	22	0.539	1.61	45'	EL	2.2	0.80	0.277	1.17	45'	EL	22	
		TNAGRIT4	43.000	--	1.111	47.757	1.4	0.277	1.71	45'	EL	22	0.539	1.55	45'	EL	2.2	0.80	0.277	1.11	45'	EL	22	
		TNAGT5A	45.000	--	1.033	46.505	1.4	0.277	1.59	45'	EL	22	0.539	1.59	45'	EL	2.2	0.80	0.277	1.03	45'	EL	22	
		TNAGT5B	45.000	--	1.009	45.408	1.4	0.277	1.56	45'	EL	22	0.539	1.47	45'	EL	2.2	0.80	0.277	1.01	45'	EL	22	

LOAD FACTORS:

	LIMIT STATE	γ_{DC}	γ_{DW}
DESIGN LOAD RATING FACTORS	STRENGTH I	1.25	1.50
	SERVICE III	1.00	1.00

NOTES:

MINIMUM RATING FACTORS ARE BASED ON THE STRENGTH I AND SERVICE III LIMIT STATES.

ALLOWABLE STRESSES FOR SERVICE III LIMIT STATE ARE AS REQUIRED FOR DESIGN.

COMMENTS:

1.
2.
3.
4.

(#) CONTROLLING LOAD RATING

(1) DESIGN LOAD RATING (HL-93)

(2) DESIGN LOAD RATING (HS-20)

(3) LEGAL LOAD RATING **

** SEE CHART FOR VEHICLE TYPE

GIRDER LOCATION

I - INTERIOR GIRDER
EL - EXTERIOR LEFT GIRDER
ER - EXTERIOR RIGHT GIRDER

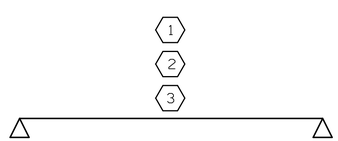

LRFR SUMMARY

FOR SPAN 'C'

PROJECT NO. 17BP.2.R.86

BEAUFORT COUNTY

STATION: 17+36.00 -L-

SHEET 2 OF 2

STATE OF NORTH CAROLINA
DEPARTMENT OF TRANSPORTATION
RALEIGH

STANDARD
LRFR SUMMARY FOR
45' CORED SLAB UNIT
90° SKEW
(NON-INTERSTATE TRAFFIC)

NORTH CAROLINA PROFESSIONAL SEAL 22997 ENGINEER JAMES J. BARCOMB 4/22/2019

Digitally signed by: James J. Barcomb
DocuSign Envelope ID: 1B4E2A3F-3A2B-4488-

ASSEMBLED BY : D. WITHERSPOON DATE : 3/19
CHECKED BY : J. BARCOMB DATE : 4/19

DRAWN BY : CVC 6/10
CHECKED BY : DNS 6/10

DOCUMENT NOT CONSIDERED FINAL UNLESS ALL SIGNATURES COMPLETED

HNTB

HNTB NORTH CAROLINA, P.C.
NC License No. C-1554
343 E. Six Forks Rd., Suite 200, Raleigh, N.C. 27609

DRAWN BY D. WITHERSPOON DATE 3/19
CHECKED BY J. BARCOMB DATE 4/19
DESIGN ENGINEER OF RECORD J. BARCOMB DATE 4/19

DWG. NO. 4

REVISIONS						SHEET NO.
NO.	BY	DATE	NO.	BY	DATE	S-4
1			3			TOTAL SHEETS
2			4			20

STD. NO. 21LRFR1_90S_45L

DocuSign Envelope ID: E0320412-C5FA-4DF1-9085-D274DF052AE7

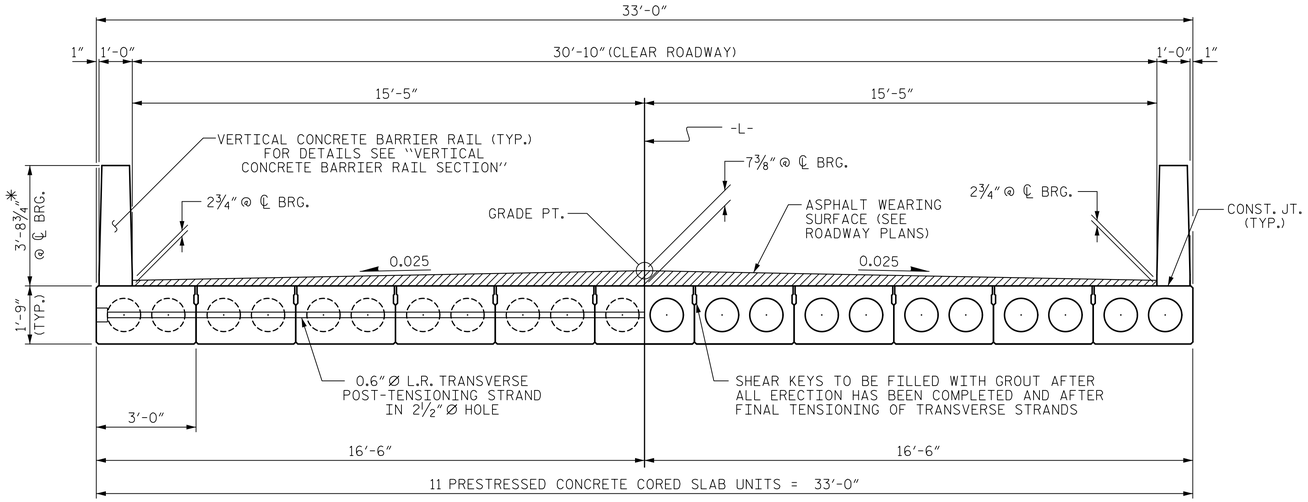

TYPICAL SECTION

* - THE MAXIMUM BARRIER RAIL HEIGHT AND ASPHALT THICKNESS IS SHOWN. THE HEIGHT OF THE BARRIER RAIL AND ASPHALT THICKNESS VARIES WHILE THE TOP OF THE BARRIER RAIL FOLLOWS THE PROFILE OF THE GUTTERLINE. FOR RAIL HEIGHT DETAILS AND ASPHALT THICKNESS SEE THE "VERTICAL CONCRETE BARRIER RAIL SECTION" DETAIL.

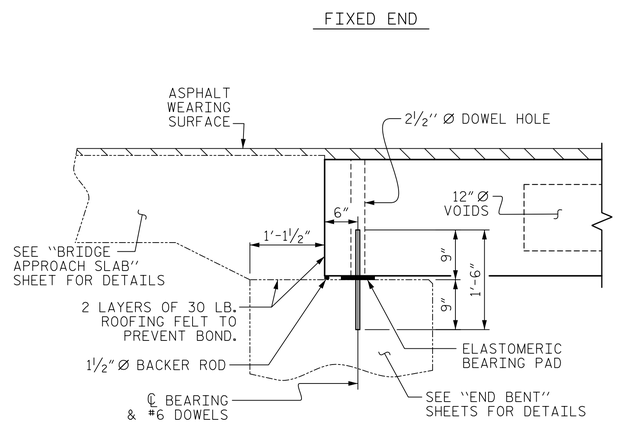

SECTION AT END BENT

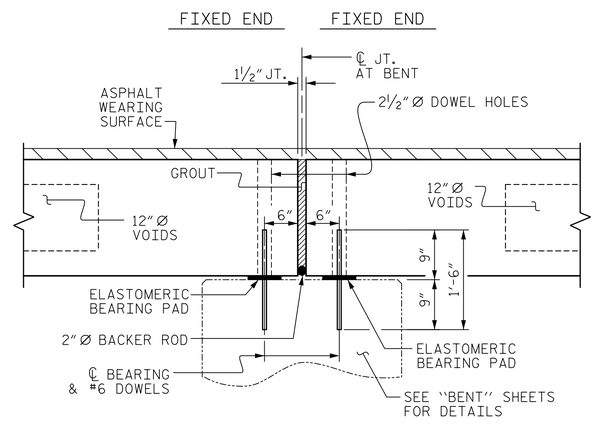

SECTION AT BENT

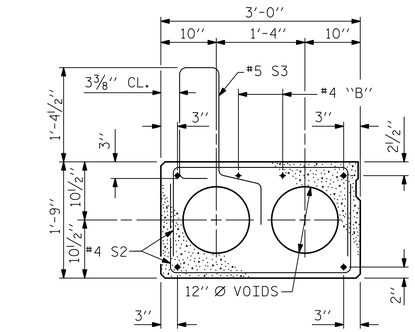

EXT. SLAB SECTION

(FOR PRESTRESSED STRAND LAYOUT, SEE INTERIOR SLAB SECTION.)

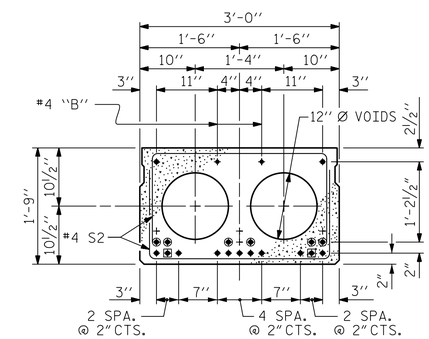

INTERIOR SLAB SECTION (40' & 45' UNIT)

(13 STRANDS REQUIRED)

0.6" Ø LOW RELAXATION STRAND LAYOUT

◉ BOND SHALL BE BROKEN ON THESE STRANDS FOR A DISTANCE OF 2'-0" FROM END OF CORED SLAB UNIT. SEE STANDARD SPECIFICATIONS, ARTICLE 1078-7.

◉ OPTIONAL FULL LENGTH DEBONDED STRANDS. THESE STRANDS ARE NOT REQUIRED. IF THE FABRICATOR CHOOSES TO INCLUDE THESE STRANDS IN THE CORED SLAB UNIT, THE STRANDS SHALL BE DEBONDED FOR THE FULL LENGTH OF THE UNIT AT NO ADDITIONAL COST. SEE STANDARD SPECIFICATIONS, ARTICLE 1078-7.

120 SCALED TEXT LEFT TOP

DEBONDING LEGEND

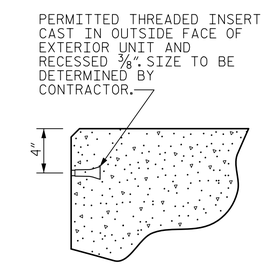

THREADED INSERT DETAIL

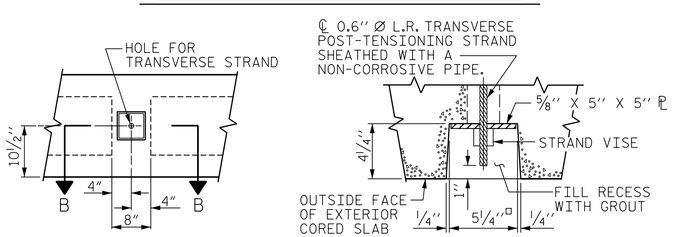

ELEVATION VIEW

SECTION B-B

GROUTED RECESS AT END OF POST-TENSIONED STRAND OF CORED SLABS

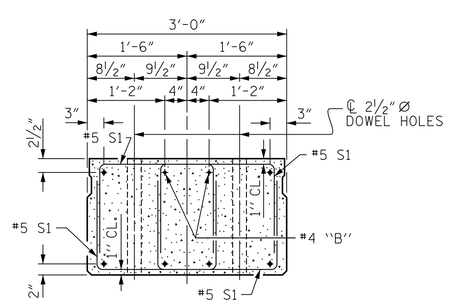

END ELEVATION

SHOWING PLACEMENT OF DOUBLE STIRRUPS AND LOCATION OF DOWEL HOLES. (STRAND LAYOUT NOT SHOWN.) INTERIOR SLAB UNIT SHOWN-EXTERIOR SLAB UNIT SIMILAR EXCEPT SHEAR KEY LOCATION.

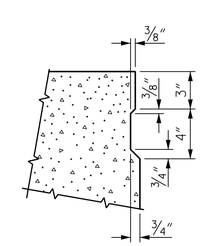

SHEAR KEY DETAIL

NOTE: OMIT SHEAR KEY ON OUTSIDE FACE OF EXTERIOR CORED SLABS.

PROJECT NO. 17BP.2.R.86

BEAUFORT COUNTY

STATION: 17+36.00 -L-

SHEET 1 OF 4

STATE OF NORTH CAROLINA
DEPARTMENT OF TRANSPORTATION
RALEIGH

STANDARD
3'-0" X 1'-9"
PRESTRESSED CONCRETE CORED SLAB UNIT
90° SKEW

NORTH CAROLINA PROFESSIONAL ENGINEER SEAL 22997 4/22/2019 JAMES J. BARCOMB
Docusigned by: James J. Barcomb

ASSEMBLED BY : D. WITHERSPOON	DATE : 3/19		
CHECKED BY : J. BARCOMB	DATE : 4/19		
DRAWN BY : DGE 5/09	REV. 9/14	MAA/TMG	
CHECKED BY : BCH 6/09			

DOCUMENT NOT CONSIDERED FINAL UNLESS ALL SIGNATURES COMPLETED

HNTB NORTH CAROLINA, P.C.
NC License No. C-1554
343 E. Six Forks Rd., Suite 200, Raleigh, N.C. 27609

DRAWN BY D. WITHERSPOON DATE 3/19
CHECKED BY J. BARCOMB DATE 4/19
DESIGN ENGINEER OF RECORD J. BARCOMB DATE 4/19
DWG. NO. 5

REVISIONS						SHEET NO.
NO.	BY	DATE	NO.	BY	DATE	S-5
1			3			TOTAL SHEETS
2			4			20

STD. NO. 21"PCS2_33_90S

DocuSign Envelope ID: E0320412-C5FA-4DF1-9085-D274DF052AE7

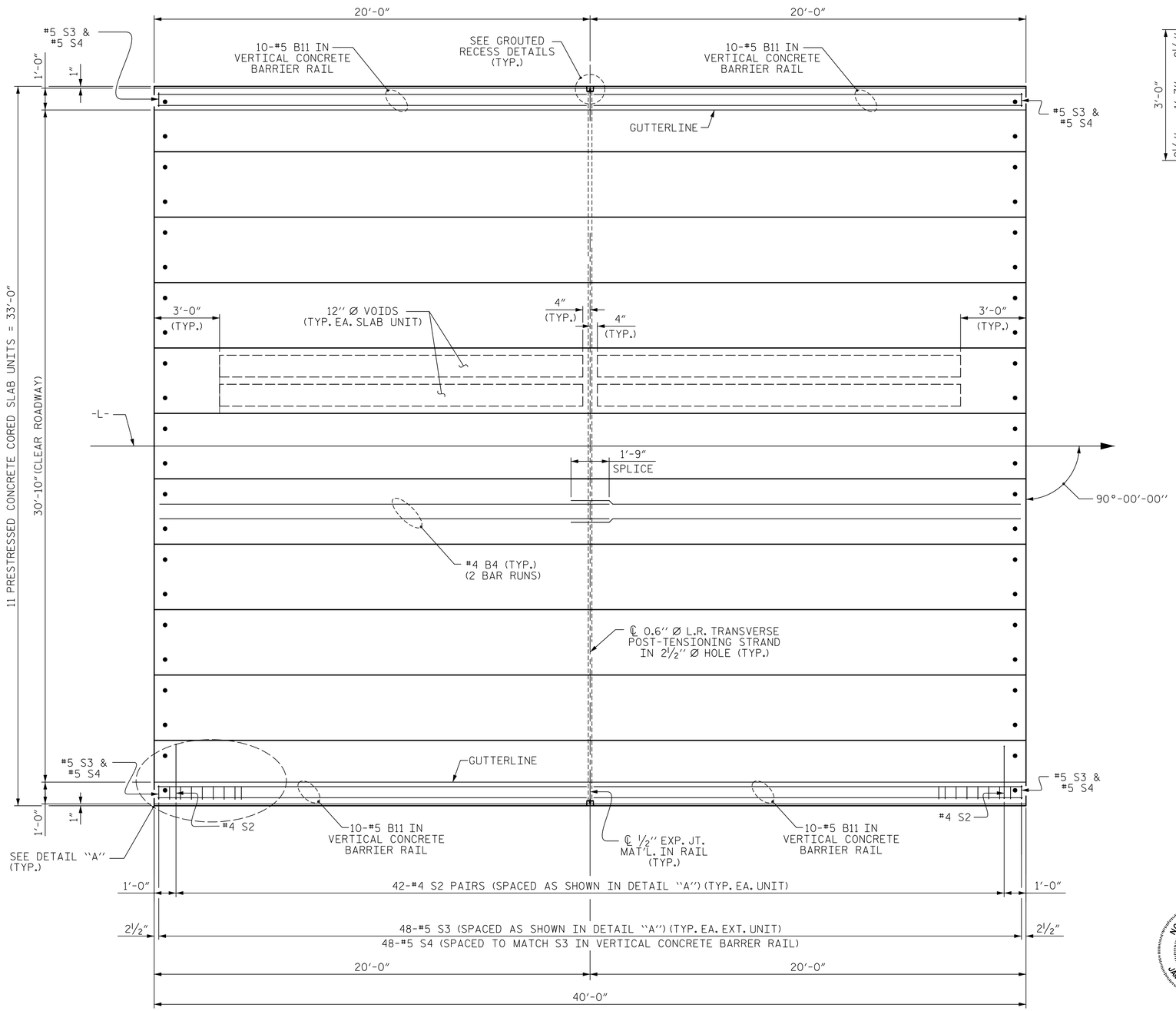

PLAN OF UNIT

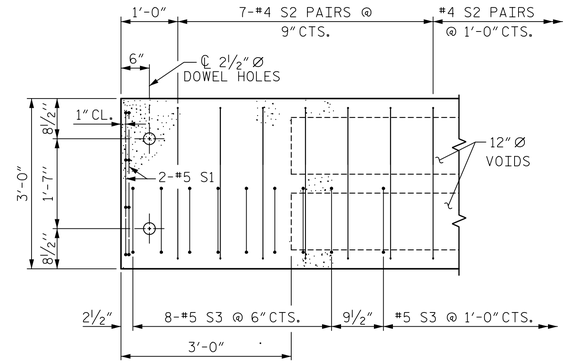

DETAIL "A"

(TYPICAL EACH END OF UNIT)
NOTE: EXTERIOR UNIT SHOWN - INTERIOR UNIT SIMILAR EXCEPT OMIT #5 S3 BARS.

PROJECT NO. 17BP.2.R.86
BEAUFORT COUNTY
STATION: 17+36.00 -L-

SHEET 2 OF 4

STATE OF NORTH CAROLINA
DEPARTMENT OF TRANSPORTATION
RALEIGH

PLAN OF 40' UNIT
30'-10" CLEAR ROADWAY
90° SKEW

NORTH CAROLINA PROFESSIONAL SEAL 22997 ENGINEER JAMES J. BARCOMB
Digitally signed by: James J. Barcomb
Date: 2019.04.22 15:09:58 -04'00'

ASSEMBLED BY : D. WITHERSPOON	DATE : 3/19		
CHECKED BY : J. BARCOMB	DATE : 4/19		
DRAWN BY : DGE 3/09	REV. 12/5/11	MAA/AAC	
CHECKED BY : BCH 3/09	REV. 8/14	MAA/TMG	

DOCUMENT NOT CONSIDERED FINAL UNLESS ALL SIGNATURES COMPLETED

HNTB NORTH CAROLINA, P.C.
NC License No. C-1554
343 E. Six Forks Rd., Suite 200, Raleigh, N.C. 27609

DRAWN BY D. WITHERSPOON DATE 3/19
CHECKED BY J. BARCOMB DATE 4/19
DESIGN ENGINEER OF RECORD J. BARCOMB DATE 4/19

DWG. NO. 6

REVISIONS						SHEET NO.
NO.	BY	DATE	NO.	BY	DATE	S-6
1			3			TOTAL SHEETS
2			4			20

STD. NO. 21" PCS_33_90S_40L

DocuSign Envelope ID: E0320412-C5FA-4DF1-9085-D274DF052AE7

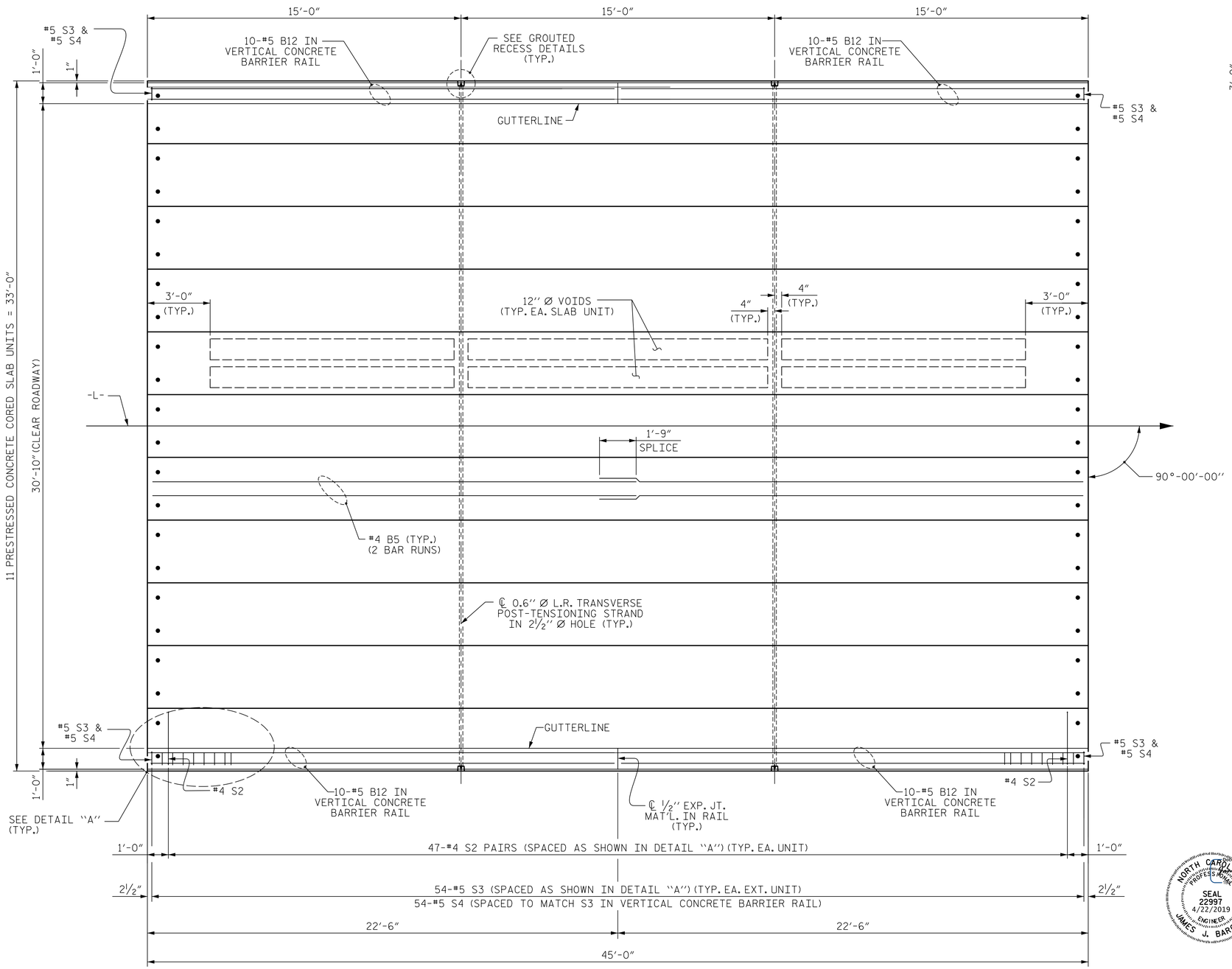

PLAN OF UNIT

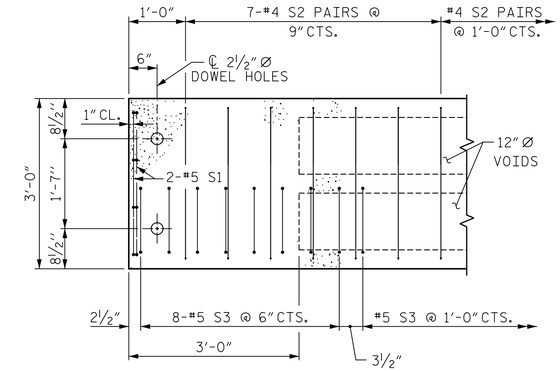

DETAIL "A"

(TYPICAL EACH END OF UNIT)
NOTE: EXTERIOR UNIT SHOWN - INTERIOR UNIT SIMILAR EXCEPT OMIT #5 S3 BARS.

PROJECT NO. 17BP.2.R.86
BEAUFORT COUNTY
STATION: 17+36.00 -L-

SHEET 3 OF 4

STATE OF NORTH CAROLINA
DEPARTMENT OF TRANSPORTATION
RALEIGH

PLAN OF 45' UNIT
30'-10" CLEAR ROADWAY
90° SKEW

NORTH CAROLINA PROFESSIONAL SEAL 22997 ENGINEER JAMES J. BARCOMB
Digitally signed by: James J. Barcomb
Date: 2019.04.22 08:48:
4/22/2019

ASSEMBLED BY : D. WITHERSPOON		DATE : 3/19	
CHECKED BY : J. BARCOMB		DATE : 4/19	
DRAWN BY : DGE 3/09	REV. 12/5/11	MAA/AAC	
CHECKED BY : BCH 3/09	REV. 8/14	MAA/TMG	

DOCUMENT NOT CONSIDERED FINAL UNLESS ALL SIGNATURES COMPLETED

HNTB NORTH CAROLINA, P.C.
NC License No. C-1554
343 E. Six Forks Rd., Suite 200, Raleigh, N.C. 27609

DRAWN BY D. WITHERSPOON DATE 3/19
CHECKED BY J. BARCOMB DATE 4/19
DESIGN ENGINEER OF RECORD J. BARCOMB DATE 4/19
DWG. NO. 7

REVISIONS						SHEET NO.
NO.	BY	DATE	NO.	BY	DATE	S-7
1			3			TOTAL SHEETS
2			4			20

STD. NO. 21" PCS_33_90S_45L

DocuSign Envelope ID: E0320412-C5FA-4DF1-9085-D274DF052AE7

BILL OF MATERIAL FOR ONE 40′ CORED SLAB UNIT

				EXTERIOR UNIT		INTERIOR UNIT	
BAR	NUMBER	SIZE	TYPE	LENGTH	WEIGHT	LENGTH	WEIGHT
B4	4	#4	STR	20′-9″	55	20′-9″	55
S1	8	#5	3	4′-3″	35	4′-3″	35
S2	84	#4	3	5′-4″	299	5′-4″	299
✳ S3	48	#5	1	5′-7″	280		
REINFORCING STEEL			LBS.		389		389
✳ EPOXY COATED REINFORCING STEEL			LBS.		280		
5000 P.S.I. CONCRETE			CU. YDS.		5.8		5.8
0.6″ Ø L.R. STRANDS			No.		13		13

BILL OF MATERIAL FOR ONE 45′ CORED SLAB UNIT

				EXTERIOR UNIT		INTERIOR UNIT	
BAR	NUMBER	SIZE	TYPE	LENGTH	WEIGHT	LENGTH	WEIGHT
B5	4	#4	STR	23′-3″	62	23′-3″	62
S1	8	#5	3	4′-3″	35	4′-3″	35
S2	94	#4	3	5′-4″	335	5′-4″	335
✳ S3	54	#5	1	5′-7″	314		
REINFORCING STEEL			LBS.		432		432
✳ EPOXY COATED REINFORCING STEEL			LBS.		314		
5000 P.S.I. CONCRETE			CU. YDS.		6.5		6.5
0.6″ Ø L.R. STRANDS			No.		13		13

BAR TYPES

ALL BAR DIMENSIONS ARE OUT TO OUT

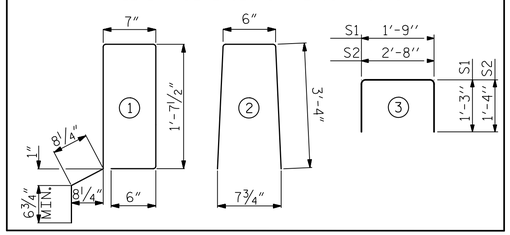

NOTES

ALL PRESTRESSING STRANDS SHALL BE 7-WIRE LOW RELAXATION GRADE 270 STRANDS AND SHALL CONFORM TO AASHTO M203 EXCEPT FOR SAMPLING REQUIREMENTS WHICH SHALL BE IN ACCORDANCE WITH THE STANDARD SPECIFICATIONS.

ALL REINFORCING STEEL CAST WITH THE CORED SLAB SECTIONS SHALL BE GRADE 60 AND SHALL BE INCLUDED IN THE UNIT PRICE BID FOR PRESTRESSED CONCRETE CORED SLABS.

RECESSES FOR TRANSVERSE STRANDS SHALL BE GROUTED AFTER THE TENSIONING OF THE STRANDS.

THE 2½″ Ø DOWEL HOLES AT FIXED ENDS OF SLAB SECTIONS SHALL BE FILLED WITH NON-SHRINK GROUT.

THE BACKER RODS SHALL CONFORM TO THE REQUIREMENTS OF TYPE M BOND BREAKER. SEE SECTION 1028 OF THE STANDARD SPECIFICATIONS.

WHEN CORED SLABS ARE CAST, AN INTERNAL HOLD-DOWN SYSTEM SHALL BE EMPLOYED TO PREVENT VOIDS FROM RISING OR MOVING SIDEWAYS. AT LEAST SIX WEEKS PRIOR TO CASTING CORED SLABS, THE CONTRACTOR SHALL SUBMIT TO THE ENGINEER FOR REVIEW AND COMMENT, DETAILED DRAWINGS OF THE PROPOSED HOLD-DOWN SYSTEM. IN ADDITION TO STRUCTURAL DETAILS, LOCATION AND SPACING OF THE HOLD-DOWNS SHALL BE INDICATED.

ALL REINFORCING STEEL IN THE VERTICAL CONCRETE BARRIER RAIL SHALL BE EPOXY COATED.

PRESTRESSING STRANDS SHALL BE CUT FLUSH WITH THE CORED SLAB UNIT ENDS.

APPLY EPOXY PROTECTIVE COATING TO CORED SLAB UNIT ENDS.

GROOVED CONTRACTION JOINTS, ½″ IN DEPTH, SHALL BE TOOLED IN ALL EXPOSED FACES OF THE BARRIER RAIL AND IN ACCORDANCE WITH ARTICLE 825-10(B) OF THE STANDARD SPECIFICATIONS. A CONTRACTION JOINT SHALL BE LOCATED AT EACH THIRD POINT BETWEEN BARRIER RAIL EXPANSION JOINTS. ONLY ONE CONTRACTION JOINT IS REQUIRED AT MIDPOINT OF BARRIER RAIL SEGMENTS LESS THAN 20 FEET IN LENGTH AND NO CONTRACTION JOINTS ARE REQUIRED FOR THOSE SEGMENTS LESS THAN 10 FEET IN LENGTH.

FLAME CUTTING OF THE TRANSVERSE POST-TENSIONING STRAND IS NOT ALLOWED.

THE TRANSFER OF LOAD FROM THE ANCHORAGES TO THE CORED SLAB UNIT SHALL BE DONE WHEN THE CONCRETE HAS REACHED A COMPRESSIVE STRENGTH OF NOT LESS THAN THE REQUIRED STRENGTH SHOWN IN THE "CONCRETE RELEASE STRENGTH" TABLE.

FOR GROUT FOR STRUCTURES, SEE SPECIAL PROVISIONS.

THE PERMITTED THREADED INSERTS ARE DETAILED AS AN OPTION FOR THE CONTRACTOR TO ATTACH FALSEWORK AND FORMWORK DURING CONSTRUCTION.

THE PERMITTED THREADED INSERTS IN THE EXTERIOR UNITS SHALL BE SIZED BY THE CONTRACTOR, SPACED AT 4′-0″ CENTERS AND GALVANIZED IN ACCORDANCE WITH SECTION 1076 OF THE STANDARD SPECIFICATIONS. STAINLESS STEEL THREADED INSERTS MAY BE USED AS AN ALTERNATE.

THE PERMITTED THREADED INSERTS SHALL BE GROUTED BY THE CONTRACTOR IMMEDIATELY FOLLOWING REMOVAL OF THE FALSEWORK.

THE COST OF THE PERMITTED THREADED INSERTS SHALL BE INCLUDED IN THE PRICE BID FOR THE PRECAST UNITS.

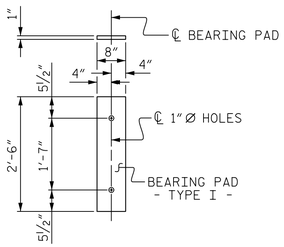

FIXED END
(TYPE I - 66 REQ′D)

CORED SLABS REQUIRED

	NUMBER	LENGTH	TOTAL LENGTH
40′ UNIT			
EXTERIOR C.S.	4	40′-0″	160′-0″
INTERIOR C.S.	18	40′-0″	720′-0″
TOTAL	22		880′-0″

CORED SLABS REQUIRED

	NUMBER	LENGTH	TOTAL LENGTH
45′ UNIT			
EXTERIOR C.S.	2	45′-0″	90′-0″
INTERIOR C.S.	9	45′-0″	405′-0″
TOTAL	11		495′-0″

CONCRETE RELEASE STRENGTH

UNIT	PSI
40′ & 45′ UNITS	4000

DEAD LOAD DEFLECTION AND CAMBER

	3′-0″ x 1′-9″
40′ & 45′ CORED SLAB UNIT	0.6″ Ø L.R. STRAND
CAMBER (SLAB ALONE IN PLACE)	⅞″ ↑
DEFLECTION DUE TO SUPERIMPOSED DEAD LOAD✳✳	⅛″ ↓
FINAL CAMBER	¾″ ↑

✳✳ INCLUDES FUTURE WEARING SURFACE

BILL OF MATERIAL FOR VERTICAL CONCRETE BARRIER RAIL

BAR	BARS PER PAIR OF EXTERIOR UNITS	TOTAL NO.	SIZE	TYPE	LENGTH	WEIGHT
	40′ UNIT					
✳ B11	40	80	#5	STR	19′-7″	1,634
✳ S4	96	192	#5	2	7′-2″	1,435
✳ EPOXY COATED REINFORCING STEEL				LBS.		3,069
CLASS AA CONCRETE				CU.YDS.		20.4
TOTAL VERTICAL CONCRETE BARRIER RAIL				LN. FT.		160.50

BILL OF MATERIAL FOR VERTICAL CONCRETE BARRIER RAIL

BAR	BARS PER PAIR OF EXTERIOR UNITS	TOTAL NO.	SIZE	TYPE	LENGTH	WEIGHT
	45′ UNIT					
✳ B12	40	40	#5	STR	22′-1″	921
✳ S4	108	108	#5	2	7′-2″	807
✳ EPOXY COATED REINFORCING STEEL				LBS.		1728
CLASS AA CONCRETE				CU.YDS.		11.5
TOTAL VERTICAL CONCRETE BARRIER RAIL				LN. FT.		90.25

GUTTERLINE ASPHALT THICKNESS & RAIL HEIGHT

	ASPHALT OVERLAY THICKNESS	RAIL HEIGHT
	@ MID-SPAN	@ MID-SPAN
40′ & 45′ UNITS	2″	3′-8″

ELASTOMERIC BEARING DETAILS

ELASTOMER IN ALL BEARINGS SHALL BE 50 DUROMETER HARDNESS.

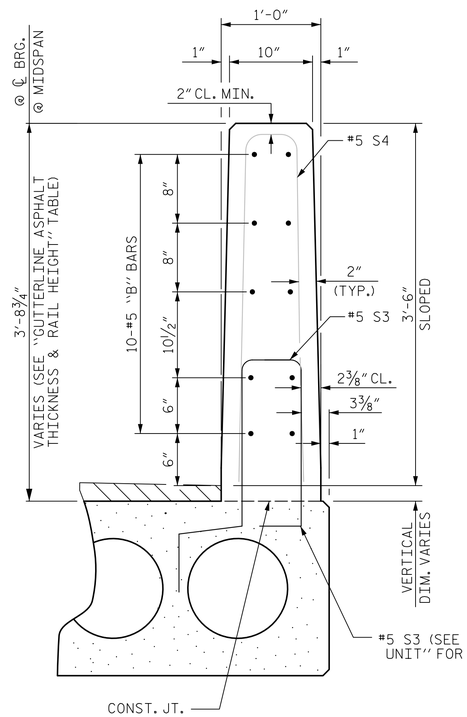

VERTICAL CONCRETE BARRIER RAIL SECTION

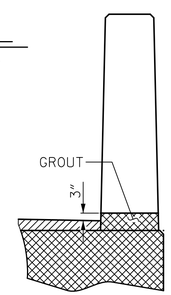

SECTION T-T
AT OPEN JOINT AT BENT
(THIS IS TO BE USED WHERE FOAM JOINT IS NOT USED)

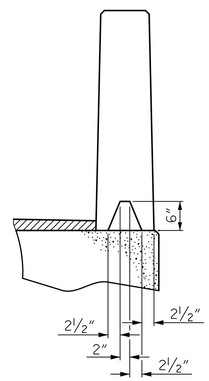

SECTION S-S
AT DAM IN OPEN JOINT
(THIS IS TO BE USED ONLY WHEN SLIP FORM IS USED)

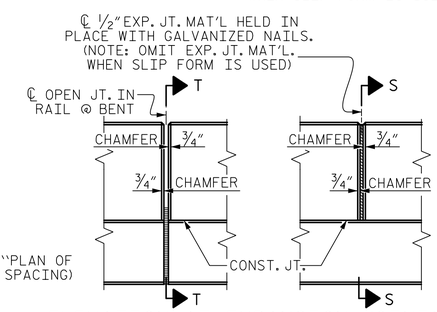

ELEVATION AT EXPANSION JOINTS

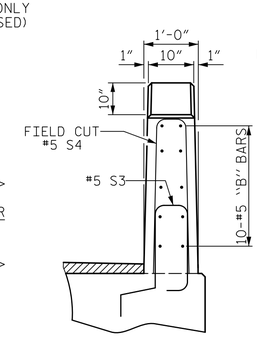

END VIEW

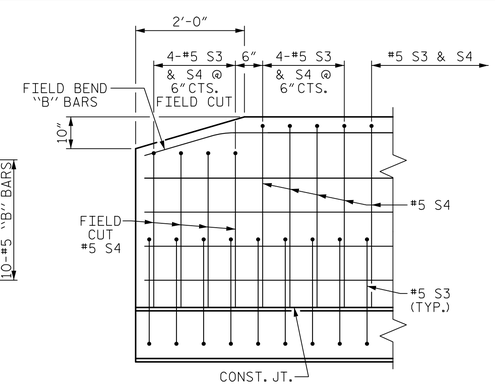

SIDE VIEW

END OF RAIL DETAILS

GRADE 270 STRANDS

	0.6″ Ø L.R.
AREA (SQUARE INCHES)	0.217
ULTIMATE STRENGTH (LBS. PER STRAND)	58,600
APPLIED PRESTRESS (LBS. PER STRAND)	43,950

PROJECT NO. 17BP.2.R.86
BEAUFORT COUNTY
STATION: 17+36.00 -L-

SHEET 4 OF 4

STATE OF NORTH CAROLINA
DEPARTMENT OF TRANSPORTATION
RALEIGH

STANDARD
3′-0″ X 1′-9″
PRESTRESSED CONCRETE
CORED SLAB UNIT
90° SKEW

NORTH CAROLINA PROFESSIONAL ENGINEER SEAL 22997 4/22/2019 JAMES J. BARCOMB
Signed by: James J. Barcomb

ASSEMBLED BY : D. WITHERSPOON DATE : 3/19
CHECKED BY : J. BARCOMB DATE : 4/19
DRAWN BY : DGE 5/09
CHECKED BY : BCH 6/09
REV. 5/18 MAA/THC

DOCUMENT NOT CONSIDERED FINAL UNLESS ALL SIGNATURES COMPLETED

HNTB
HNTB NORTH CAROLINA, P.C.
NC License No. C-1554
343 E. Six Forks Rd., Suite 200, Raleigh, N.C. 27609

DRAWN BY D. WITHERSPOON DATE 3/19
CHECKED BY J. BARCOMB DATE 4/19
DESIGN ENGINEER OF RECORD J. BARCOMB DATE 4/19
DWG. NO. 8

REVISIONS						SHEET NO.
NO.	BY	DATE	NO.	BY	DATE	S-8
1			3			TOTAL SHEETS
2			4			20

STD. NO. 21″PCS3_33_90S

DocuSign Envelope ID: E0320412-C5FA-4DF1-9085-D274DF052AE7

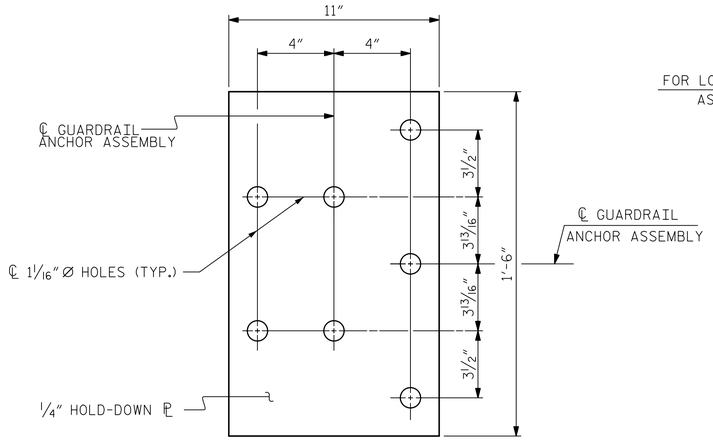

PLAN

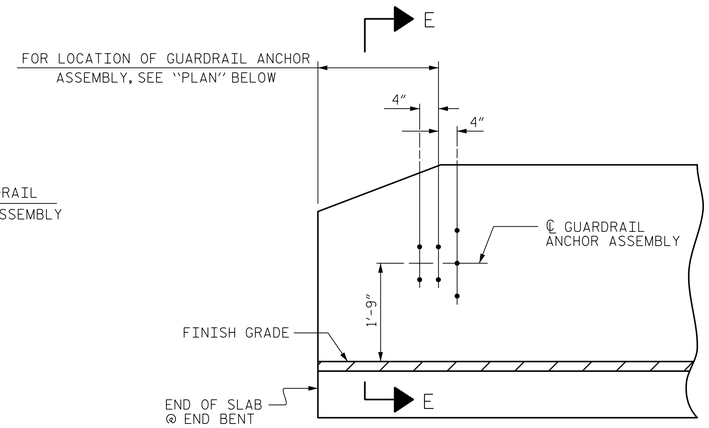

ELEVATION

NOTES

THE GUARDRAIL ANCHOR ASSEMBLY SHALL CONSIST OF A 1/4" HOLD DOWN PLATE AND 7 - 7/8" Ø BOLTS WITH NUTS AND WASHERS.

THE HOLD-DOWN PLATE SHALL CONFORM TO AASHTO M270 GRADE 36. AFTER FABRICATION, THE HOLD-DOWN PLATE SHALL BE HOT-DIP GALVANIZED IN ACCORDANCE WITH AASHTO M111.

BOLTS SHALL CONFORM TO THE REQUIREMENTS OF ASTM A307 AND NUTS SHALL CONFORM TO THE REQUIREMENTS OF AASHTO M291. BOLTS, NUTS AND WASHERS SHALL BE GALVANIZED. (AT THE CONTRACTOR'S OPTION, STAINLESS STEEL BOLTS, NUTS AND WASHERS MAY BE USED AS AN ALTERNATE FOR THE 7/8" Ø GALVANIZED BOLTS, NUTS AND WASHERS. THEY SHALL CONFORM TO OR EXCEED THE MECHANICAL REQUIREMENTS OF ASTM A307. THE USE OF THIS ALTERNATE SHALL BE APPROVED BY THE ENGINEER.)

THE GUARDRAIL ANCHOR ASSEMBLY IS REQUIRED AT ALL POINTS WHERE APPROACH GUARDRAIL IS TO BE ATTACHED TO THE END OF BARRIER RAIL. FOR POINTS OF ATTACHMENT, SEE SKETCH.

AFTER INSTALLATION, THE EXPOSED THREAD OF THE BOLT SHALL BE BURRED WITH A SHARP POINTED TOOL.

THE COST OF THE GUARDRAIL ANCHOR ASSEMBLY SHALL BE INCLUDED IN THE UNIT CONTRACT PRICE BID FOR VERTICAL CONCRETE BARRIER RAIL.

THE VERTICAL REINFORCING BARS MAY BE SHIFTED SLIGHTLY IN THE VERTICAL CONCRETE BARRIER RAIL TO CLEAR ASSEMBLY BOLTS.

THE 1 1/4" Ø HOLES SHALL BE FORMED OR DRILLED WITH A CORE BIT. IMPACT TOOLS WILL NOT BE PERMITTED. ANY CONCRETE DAMAGED BY THIS WORK SHALL BE REPAIRED TO THE SATISFACTION OF THE ENGINEER.

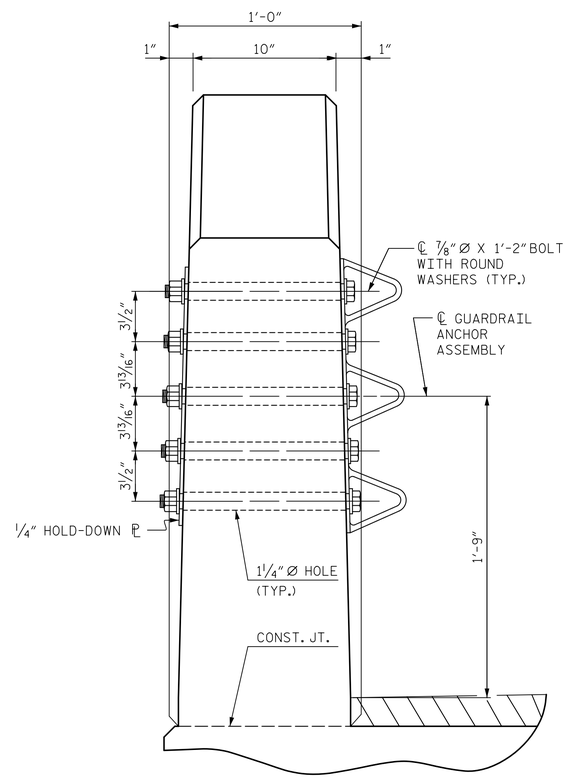

SECTION E-E

GUARDRAIL ANCHOR ASSEMBLY DETAILS

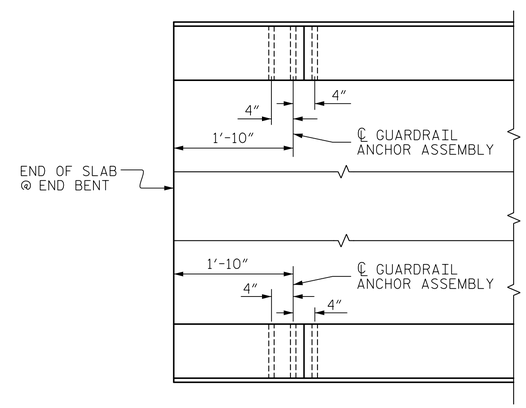

PLAN

LOCATION OF ANCHORS FOR GUARDRAIL

END BENT #1 SHOWN, END BENT #2 SIMILAR.

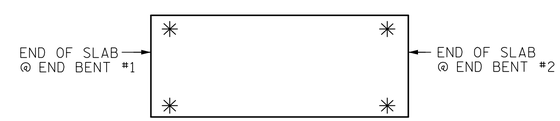

SKETCH SHOWING POINTS OF ATTACHMENT

✳ DENOTES GUARDRAIL ANCHOR ASSEMBLY

PROJECT NO. 17BP.2.R.86

BEAUFORT COUNTY

STATION: 17+36.00 -L-

NORTH CAROLINA PROFESSIONAL ENGINEER SEAL 22997 4/22/2019 JAMES J. BARCOMB

Digitally signed by: James J. Barcomb
DN: cn=James J. Barcomb, c=US, o=HNTB, ou=Engineering, email=jbarcomb@hntb.com
Date: 2019.04.22 09:39:48 -04'00'

STATE OF NORTH CAROLINA
DEPARTMENT OF TRANSPORTATION
RALEIGH

STANDARD
GUARDRAIL ANCHORAGE DETAILS FOR VERTICAL CONCRETE BARRIER RAIL

ASSEMBLED BY : D. WITHERSPOON	DATE : 3/19
CHECKED BY : J. BARCOMB	DATE : 4/19

DRAWN BY : MAA 5/10	REV. 1/15 MAA/TMG
CHECKED BY : GM 5/10	REV. 12/17 MAA/THC
	REV. 5/18 MAA/THC

DOCUMENT NOT CONSIDERED FINAL UNLESS ALL SIGNATURES COMPLETED

HNTB
HNTB NORTH CAROLINA, P.C.
NC License No. C-1554
343 E. Six Forks Rd., Suite 200, Raleigh, N.C. 27609

DRAWN BY D. WITHERSPOON	DATE 3/19
CHECKED BY J. BARCOMB	DATE 4/19
DESIGN ENGINEER OF RECORD J. BARCOMB	DATE 4/19

DWG. NO. 9

REVISIONS						SHEET NO.
NO.	BY	DATE	NO.	BY	DATE	S-9
1			3			TOTAL SHEETS
2			4			20

STD. NO. GRA3

DocuSign Envelope ID: E0320412-C5FA-4DF1-9085-D274DF052AE7

NOTES

STIRRUPS IN CAP MAY BE SHIFTED AS NECESSARY TO CLEAR DOWELS.

THE CONCRETE IN THE SHADED AREA OF THE WING SHALL BE POURED AFTER THE VERTICAL CONCRETE BARRIER RAIL IS CAST IF SLIP FORMING IS USED.

FOR WING DETAILS, SEE SHEET 3 OF 4.

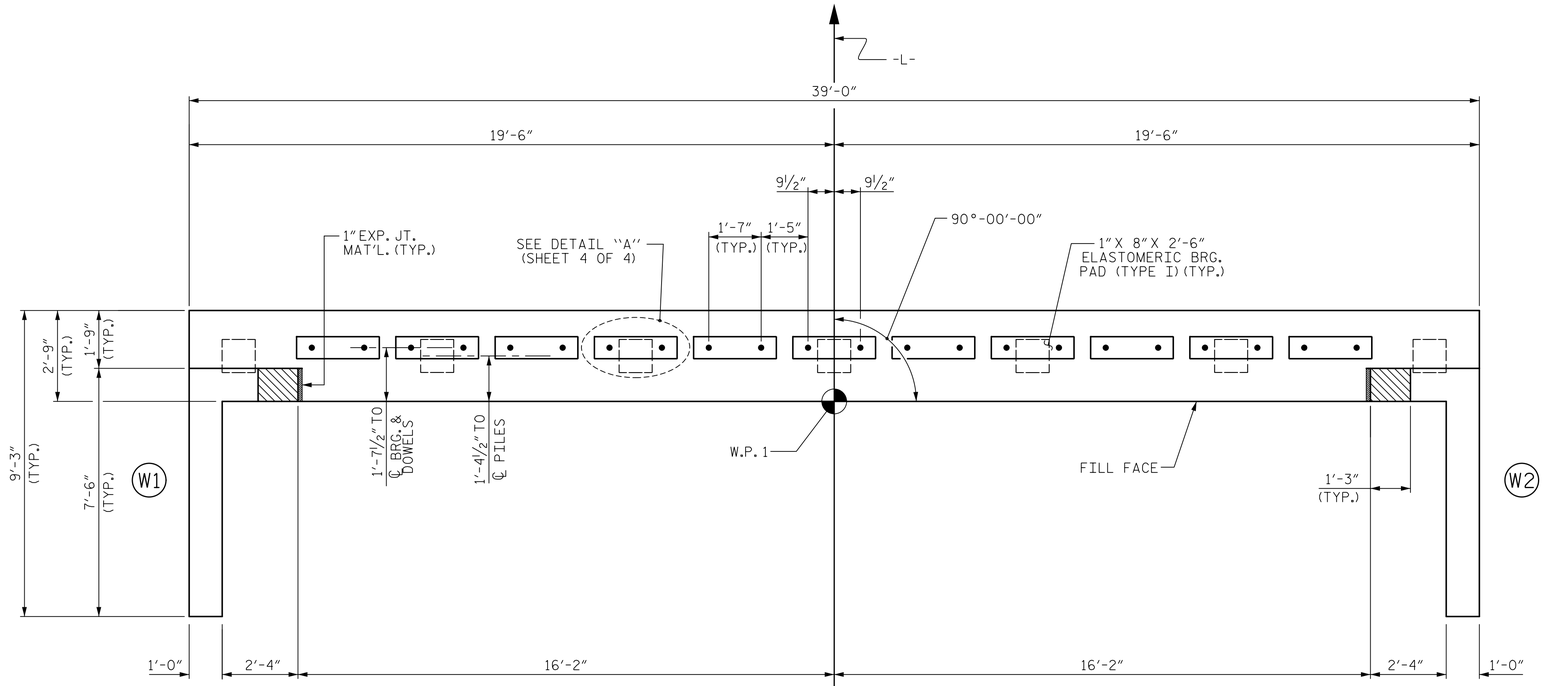

PLAN

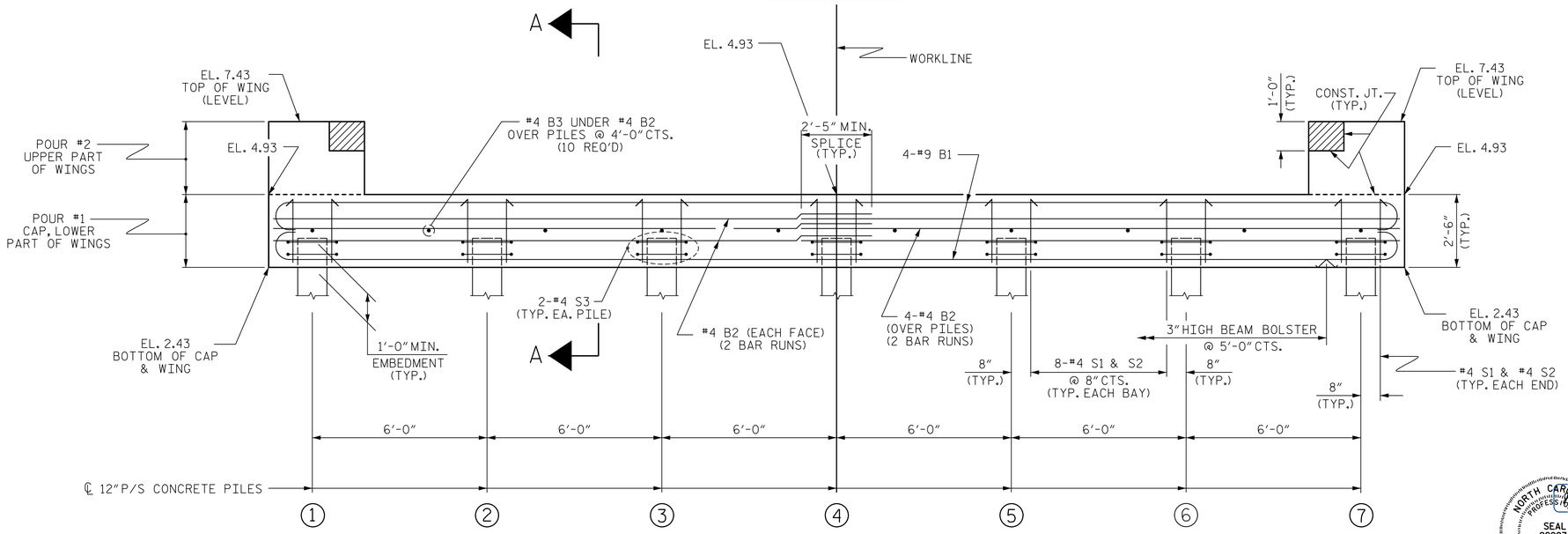

ELEVATION

WINGS NOT SHOWN FOR CLARITY.
FOR SECTION A-A, SEE SHEET 4 OF 4.

PROJECT NO. 17BP.2.R.86
BEAUFORT COUNTY
STATION: 17+36.00 -L-

SHEET 1 OF 4

STATE OF NORTH CAROLINA
DEPARTMENT OF TRANSPORTATION
RALEIGH

SUBSTRUCTURE

END BENT No. 1

NORTH CAROLINA PROFESSIONAL SEAL 22997 ENGINEER JAMES J. BARCOMB 4/22/2019
Digitally signed by: James J. Barcomb
Date: 2019.04.22 09:58:48

ASSEMBLED BY : M. WRIGHT	DATE : 4/19		
CHECKED BY : J. BARCOMB	DATE : 4/19		
DRAWN BY : DGE 01/10	REV. 4/15	MAA/TMG	
CHECKED BY : MKT 01/10			

DOCUMENT NOT CONSIDERED FINAL UNLESS ALL SIGNATURES COMPLETED

HNTB
HNTB NORTH CAROLINA, P.C.
NC License No. C-1554
343 E. Six Forks Rd., Suite 200, Raleigh, N.C. 27609

DRAWN BY	M. WRIGHT	DATE	4/19
CHECKED BY	J. BARCOMB	DATE	4/19
DESIGN ENGINEER OF RECORD	J. BARCOMB	DATE	4/19

DWG. NO. 10

REVISIONS						SHEET NO.
NO.	BY	DATE	NO.	BY	DATE	S-10
1			3			TOTAL SHEETS
2			4			20

STD. NO. EB_33_90S

DocuSign Envelope ID: E0320412-C5FA-4DF1-9085-D274DF052AE7

NOTES

STIRRUPS IN CAP MAY BE SHIFTED AS NECESSARY TO CLEAR DOWELS.

THE CONCRETE IN THE SHADED AREA OF THE WING SHALL BE POURED AFTER THE VERTICAL CONCRETE BARRIER RAIL IS CAST IF SLIP FORMING IS USED.

FOR WING DETAILS, SEE SHEET 3 OF 4.

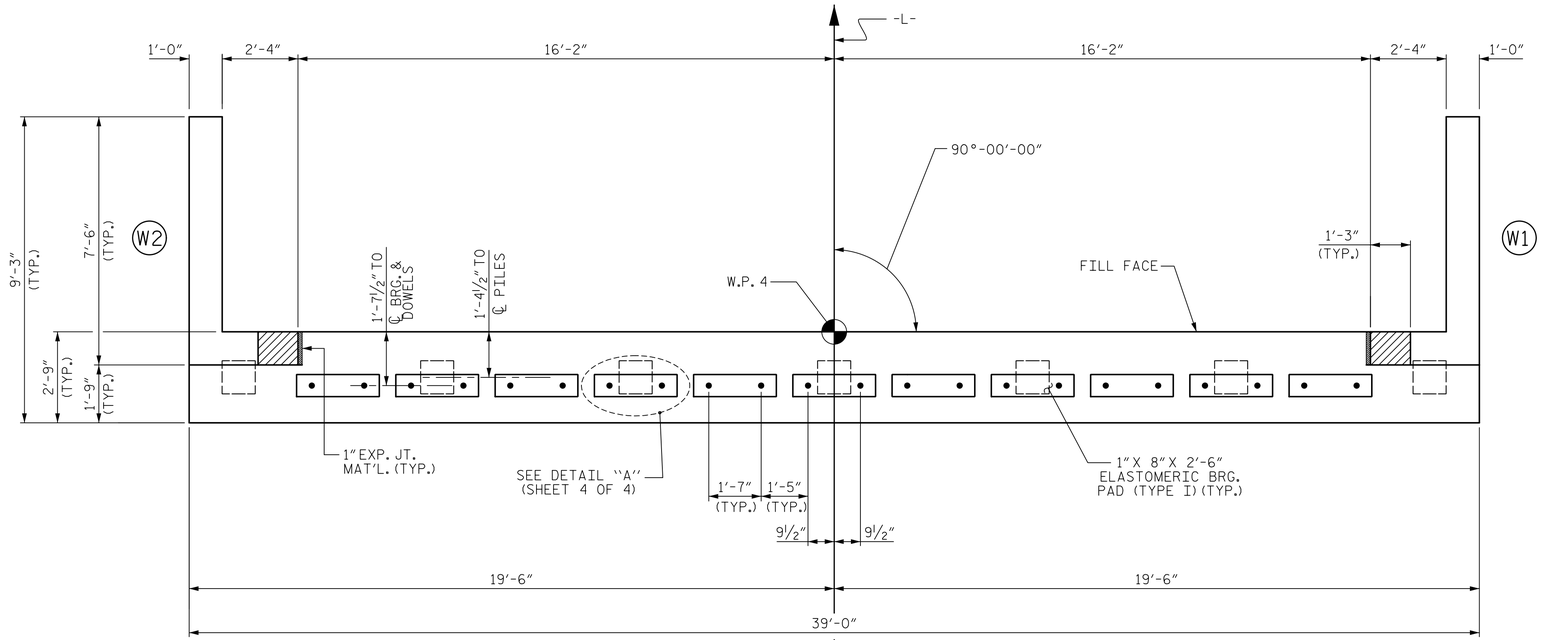

PLAN

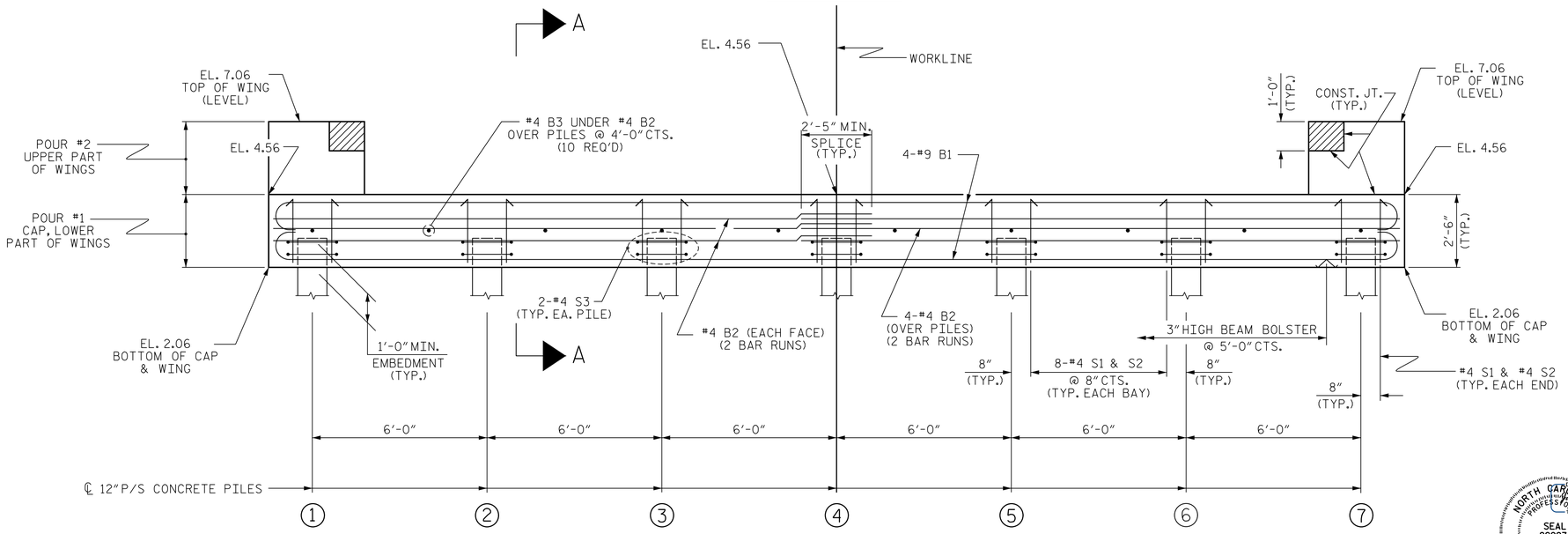

ELEVATION

WINGS NOT SHOWN FOR CLARITY.
FOR SECTION A-A, SEE SHEET 4 OF 4.

PROJECT NO. 17BP.2.R.86
BEAUFORT COUNTY
STATION: 17+36.00 -L-

SHEET 2 OF 4

STATE OF NORTH CAROLINA
DEPARTMENT OF TRANSPORTATION
RALEIGH

SUBSTRUCTURE

END BENT No. 2

NORTH CAROLINA PROFESSIONAL SEAL 22997 ENGINEER JAMES J. BARCOMB 4/22/2019
Digitally signed by: James J. Barcomb
DocuSign Envelope ID: 0A0A0A0A-0A0A-0A0A-0A0A-0A0A0A0A0A0A

ASSEMBLED BY : M. WRIGHT	DATE : 4/19		
CHECKED BY : J. BARCOMB	DATE : 4/19		
DRAWN BY : DGE 01/10	REV. 4/15	MAA/TMG	
CHECKED BY : MKT 01/10			

DOCUMENT NOT CONSIDERED FINAL UNLESS ALL SIGNATURES COMPLETED

HNTB
HNTB NORTH CAROLINA, P.C.
NC License No. C-1554
343 E. Six Forks Rd., Suite 200, Raleigh, N.C. 27609

DRAWN BY	M. WRIGHT	DATE	4/19
CHECKED BY	J. BARCOMB	DATE	4/19
DESIGN ENGINEER OF RECORD	J. BARCOMB	DATE	4/19

DWG. NO. II

REVISIONS						SHEET NO.
NO.	BY	DATE	NO.	BY	DATE	S-11
1			3			TOTAL SHEETS
2			4			20

STD. NO. EB_33_90S

DocuSign Envelope ID: E0320412-C5FA-4DF1-9085-D274DF052AE7

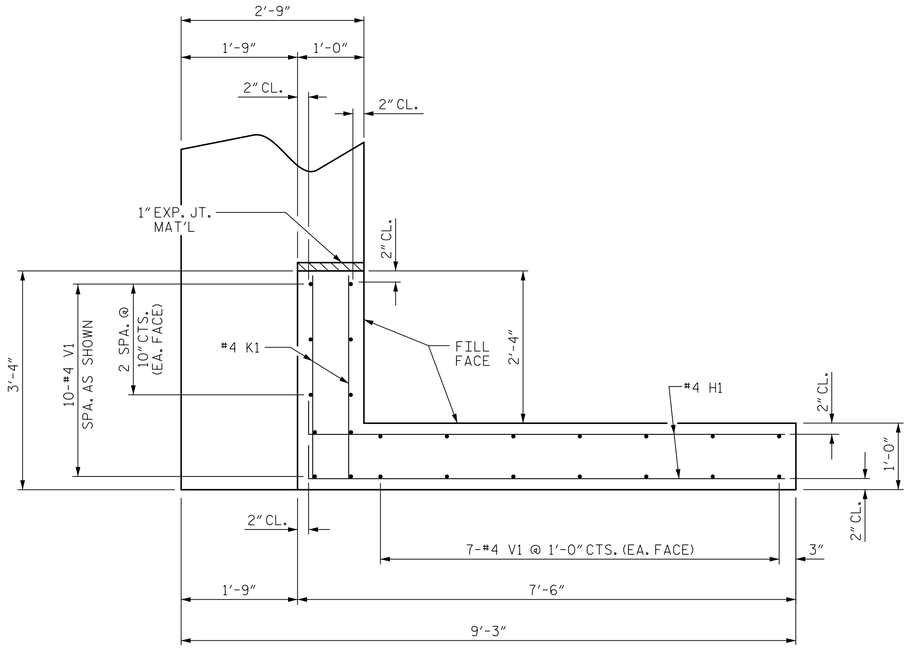

PLAN OF WING (W1)

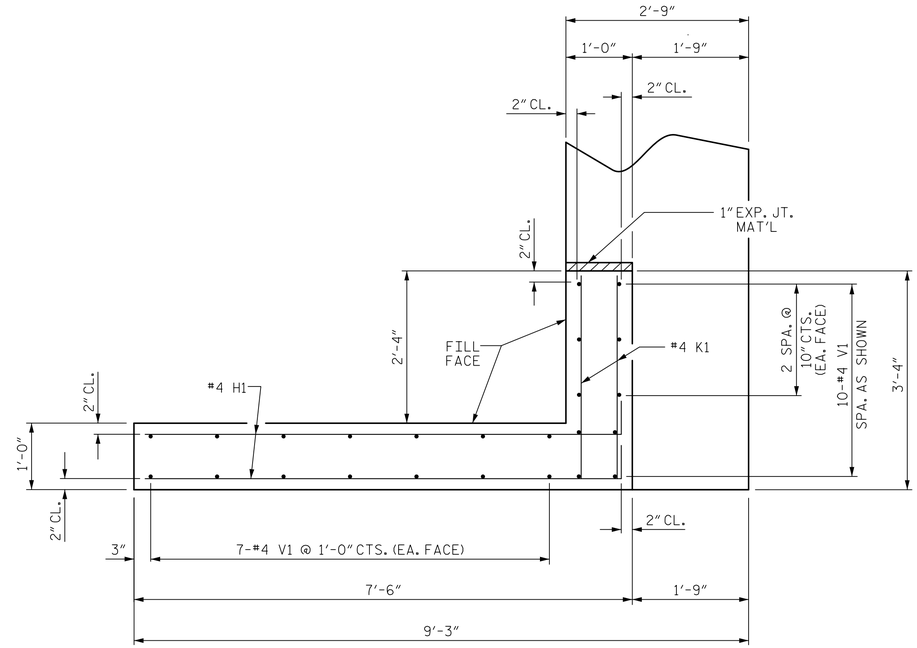

PLAN OF WING (W2)

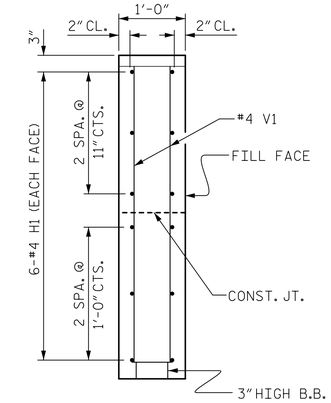

SECTION X-X

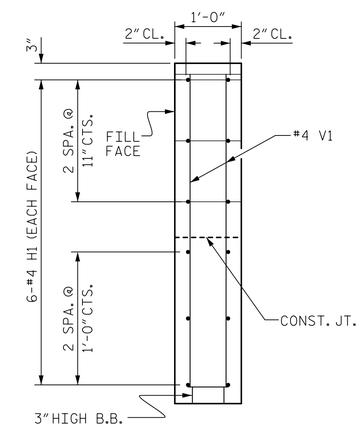

SECTION Y-Y

X

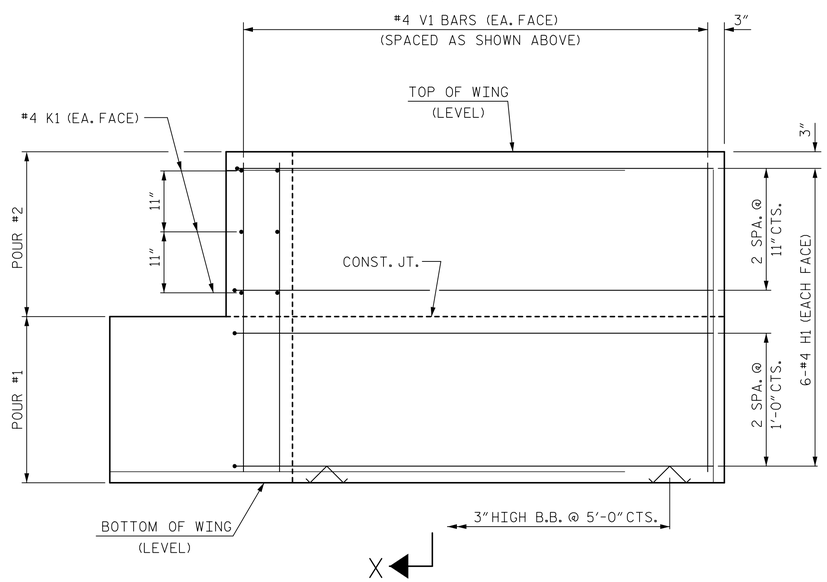

X

ELEVATION OF WING (W1)

Y

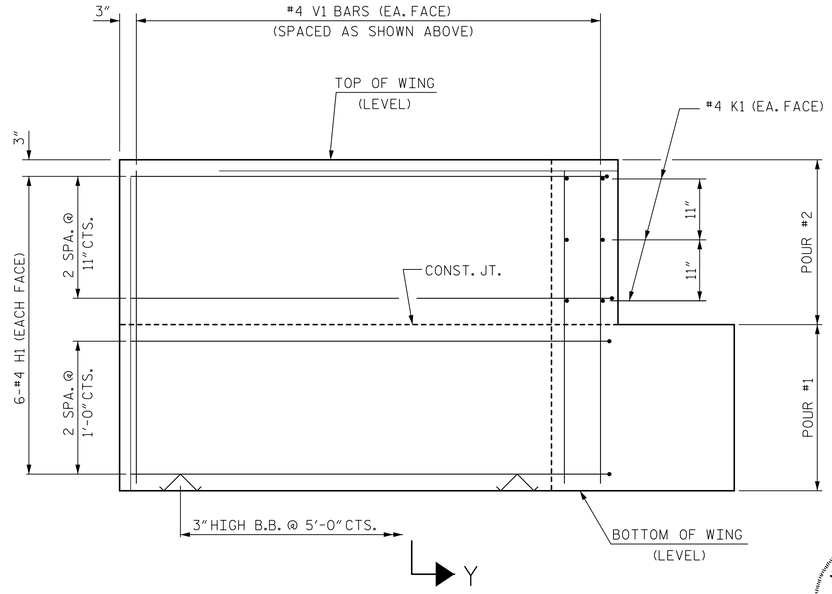

Y

ELEVATION OF WING (W2)

PROJECT NO. 17BP.2.R.86

BEAUFORT COUNTY

STATION: 17+36.00 -L-

SHEET 3 OF 4

STATE OF NORTH CAROLINA
DEPARTMENT OF TRANSPORTATION
RALEIGH

SUBSTRUCTURE

END BENT
WING DETAILS

WING DETAILS

ASSEMBLED BY : M. WRIGHT		DATE : 4/19	
CHECKED BY : J. BARCOMB		DATE : 4/19	
DRAWN BY : DGE 02/10	REV. 4/15	MAA/TMG	
CHECKED BY : MKT 02/10			

DOCUMENT NOT CONSIDERED FINAL UNLESS ALL SIGNATURES COMPLETED

HNTB NORTH CAROLINA, P.C.
NC License No. C-1554
343 E. Six Forks Rd., Suite 200, Raleigh, N.C. 27609

DRAWN BY M. WRIGHT DATE 4/19
CHECKED BY J. BARCOMB DATE 4/19
DESIGN ENGINEER OF RECORD J. BARCOMB DATE 4/19

DWG. NO. 12

NORTH CAROLINA PROFESSIONAL SEAL 22997 ENGINEER JAMES J. BARCOMB 4/22/2019

Signed by: James J. Barcomb

REVISIONS						SHEET NO.
NO.	BY	DATE	NO.	BY	DATE	S-12
1			3			TOTAL SHEETS
2			4			20

STD. NO. EB_39_90S

DocuSign Envelope ID: E0320412-C5FA-4DF1-9085-D274DF052AE7

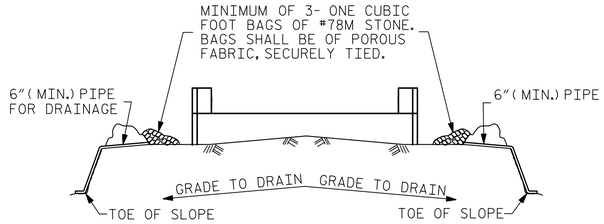

BAGGED STONE AND PIPE SHALL BE PLACED IMMEDIATELY AFTER COMPLETION OF END BENT EXCAVATION. PIPE MAY BE EITHER CONCRETE, CORRUGATED STEEL, CORRUGATED ALUMINUM ALLOY, OR CORRUGATED PLASTIC. PERFORATED PIPE WILL NOT BE ALLOWED.

BAGGED STONE SHALL REMAIN IN PLACE UNTIL THE ENGINEER DIRECTS THAT IT BE REMOVED. THE CONTRACTOR SHALL REMOVE AND DISPOSE OF SILT ACCUMULATIONS AT BAGGED STONE WHEN SO DIRECTED BY THE ENGINEER. BAGS SHALL BE REMOVED AND REPLACED WHENEVER THE ENGINEER DETERMINES THAT THEY HAVE DETERIORATED AND LOST THEIR EFFECTIVENESS.

NO SEPARATE PAYMENT WILL BE MADE FOR THIS WORK AND THE ENTIRE COST OF THIS WORK SHALL BE INCLUDED IN THE UNIT CONTRACT PRICE BID FOR THE SEVERAL PAY ITEMS.

TEMPORARY DRAINAGE AT END BENT

BAR TYPES

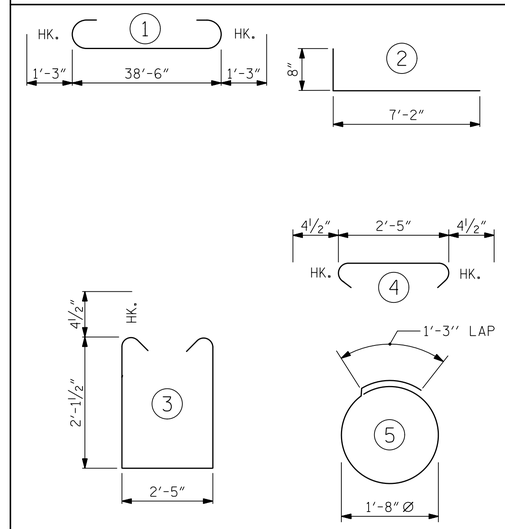

ALL BAR DIMENSIONS ARE OUT TO OUT.

BILL OF MATERIAL
FOR ONE END BENT

BAR	NO.	SIZE	TYPE	LENGTH	WEIGHT
B1	8	#9	1	41'-0"	1115
B2	16	#4	STR	20'-7"	220
B3	10	#4	STR	2'-5"	16
D1	22	#6	STR	1'-6"	50
H1	24	#4	2	7'-10"	126
K1	12	#4	STR	2'-11"	23
S1	50	#4	3	7'-5"	248
S2	50	#4	4	3'-2"	106
S3	14	#4	5	6'-6"	61
V1	48	#4	STR	4'-8"	150

REINFORCING STEEL (FOR ONE END BENT) 2115 LBS.

CLASS A CONCRETE BREAKDOWN (FOR ONE END BENT)

POUR #1 CAP, LOWER PART OF WINGS ▲ 10.9 C.Y.

POUR #2 UPPER PART OF WINGS 1.8 C.Y.

TOTAL CLASS A CONCRETE 12.7 C.Y.

▲ CONCRETE DISPLACED BY THE 12" PRESTRESSED CONCRETE PILES HAS BEEN DEDUCTED FROM THE CONCRETE QUANTITY.

END BENT No. 1	END BENT No. 2
12" P/S CONCRETE PILES NO: 7 LIN. FT.= 315	12" P/S CONCRETE PILES NO: 7 LIN. FT.= 315
PILE DRIVING EQUIPMENT SETUP FOR 12" P/S CONCRETE PILES NO: 7	PILE DRIVING EQUIPMENT SETUP FOR 12" P/S CONCRETE PILES NO: 7
PILE REDRIVES NO: 4	PILE REDRIVES NO: 4

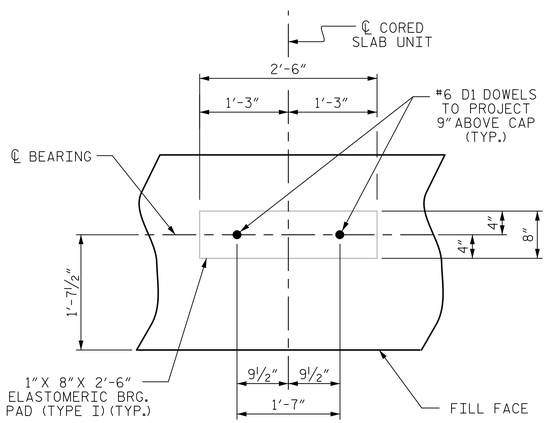

DETAIL "A"

(END BENT No. 1 SHOWN, END BENT No. 2 SIMILAR BY ROTATION)

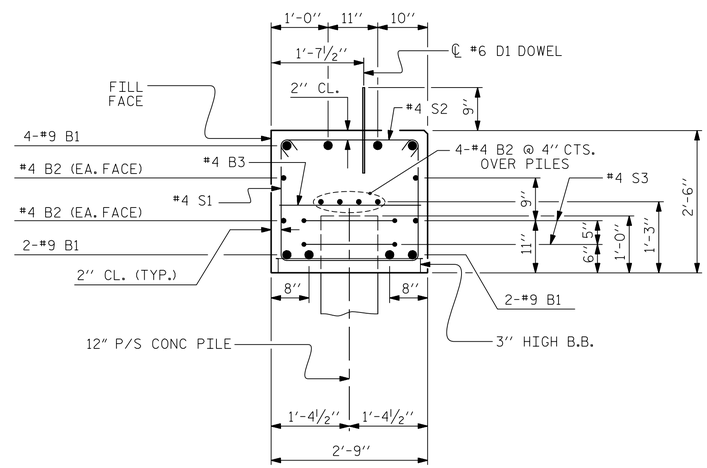

SECTION A-A

PROJECT NO. 17BP.2.R.86

BEAUFORT COUNTY

STATION: 17+36.00 -L-

SHEET 4 OF 4

STATE OF NORTH CAROLINA
DEPARTMENT OF TRANSPORTATION
RALEIGH

SUBSTRUCTURE

END BENT No. 1 & 2 DETAILS

NORTH CAROLINA PROFESSIONAL SEAL 22997 ENGINEER JAMES J. BARCOMB 4/22/2019

Digitally signed by James J. Barcomb

ASSEMBLED BY : M. WRIGHT	DATE : 4/19		
CHECKED BY : J. BARCOMB	DATE : 4/19		
DRAWN BY : DGE 12/09	REV. 4/17	MAA/THC	
CHECKED BY : MKT 01/10			

DOCUMENT NOT CONSIDERED FINAL UNLESS ALL SIGNATURES COMPLETED

HNTB NORTH CAROLINA, P.C.
NC License No. C-1554
343 E. Six Forks Rd., Suite 200, Raleigh, N.C. 27609

DRAWN BY M. WRIGHT DATE 4/19
CHECKED BY J. BARCOMB DATE 4/19
DESIGN ENGINEER OF RECORD J. BARCOMB DATE 4/19

DWG. NO. 13

REVISIONS						SHEET NO.
NO.	BY	DATE	NO.	BY	DATE	S-13
1			3			TOTAL SHEETS
2			4			20

STD. NO. EB_39_90S

DocuSign Envelope ID: E0320412-C5FA-4DF1-9085-D274DF052AE7

NOTES

STIRRUPS IN CAP MAY BE SHIFTED AS NECESSARY TO CLEAR DOWELS.

★ INVERT ALTERNATE STIRRUPS.

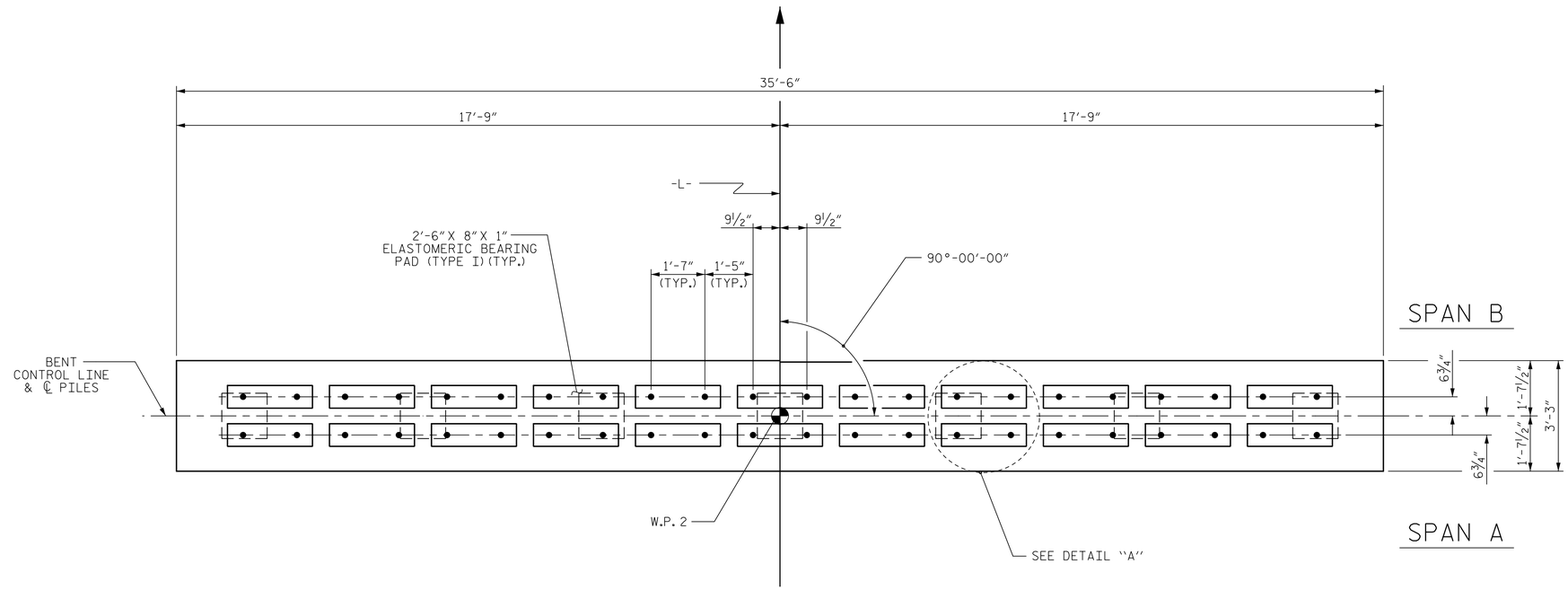

PLAN

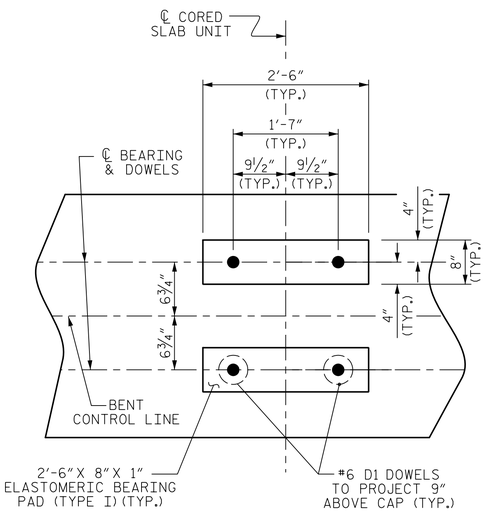

DETAIL "A"

(DIMENSIONS ARE TYPICAL EACH BEARING)

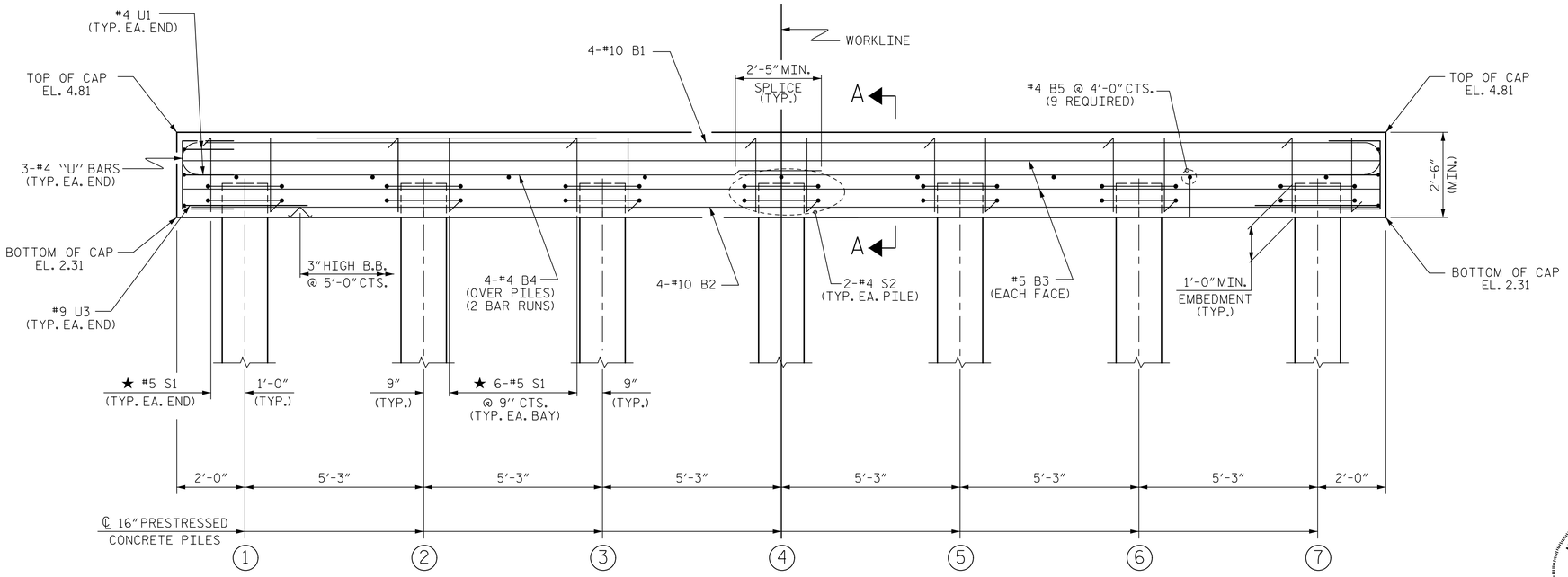

ELEVATION

FOR SECTION A-A, SEE SHEET 2 OF 2

PROJECT NO. 17BP.2.R.86

BEAUFORT COUNTY

STATION: 17+36.00 -L-

SHEET 1 OF 3

STATE OF NORTH CAROLINA
DEPARTMENT OF TRANSPORTATION
RALEIGH

SUBSTRUCTURE

BENT No. 1

NORTH CAROLINA PROFESSIONAL ENGINEER SEAL 22997 4/22/2019 JAMES J. BARCOMB

DocuSigned by: James J. Barcomb

ASSEMBLED BY : M. WRIGHT	DATE : 4/19
CHECKED BY : J. BARCOMB	DATE : 4/19
DRAWN BY : DGE 5/10	REV. 6/17 MAA/THC
CHECKED BY : MKT 5/10	

DOCUMENT NOT CONSIDERED FINAL UNLESS ALL SIGNATURES COMPLETED

HNTB

HNTB NORTH CAROLINA, P.C.
NC License No. C-1554
343 E. Six Forks Rd., Suite 200, Raleigh, N.C. 27609

DRAWN BY M. WRIGHT	DATE 4/19	DWG. NO. 14
CHECKED BY J. BARCOMB	DATE 4/19	
DESIGN ENGINEER OF RECORD J. BARCOMB	DATE 4/19	

REVISIONS						SHEET NO.
NO.	BY	DATE	NO.	BY	DATE	S-14
1			3			TOTAL SHEETS
2			4			20

STD.NO. 16" PS_BT_33_90S_<60'

DocuSign Envelope ID: E0320412-C5FA-4DF1-9085-D274DF052AE7

NOTES

STIRRUPS IN CAP MAY BE SHIFTED AS NECESSARY TO CLEAR DOWELS.

★ INVERT ALTERNATE STIRRUPS.

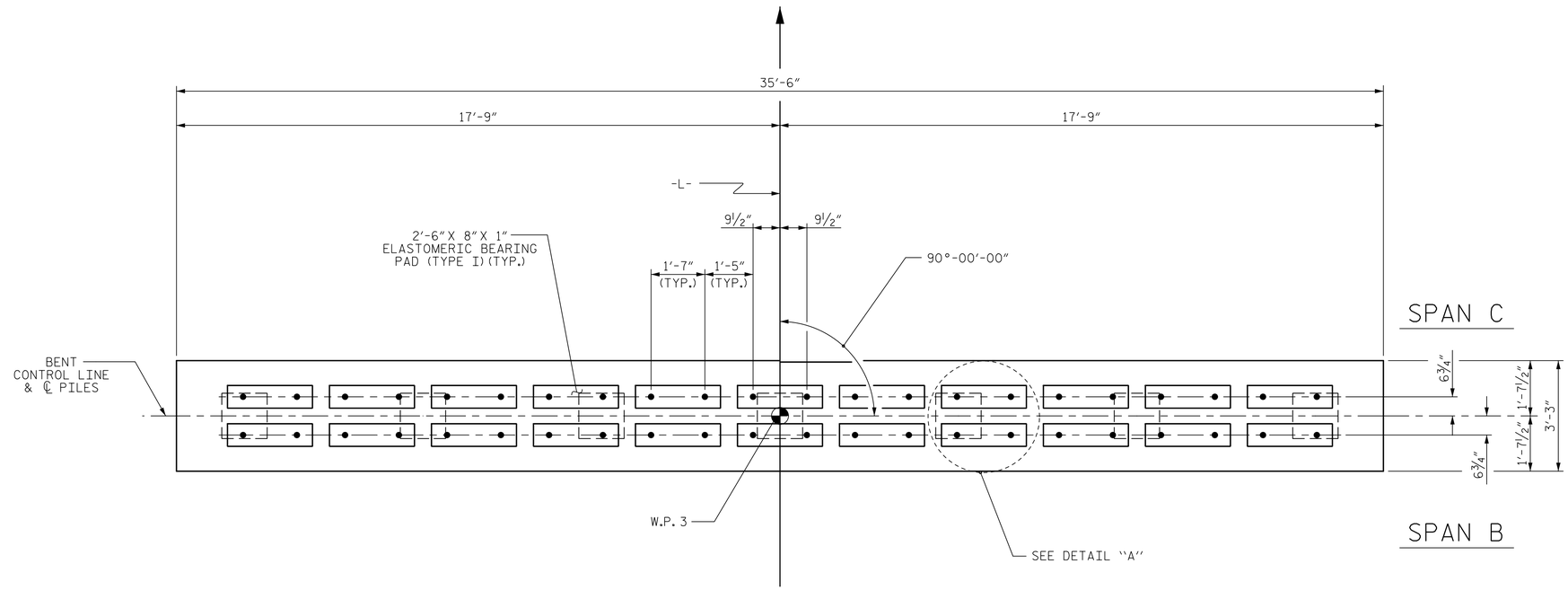

PLAN

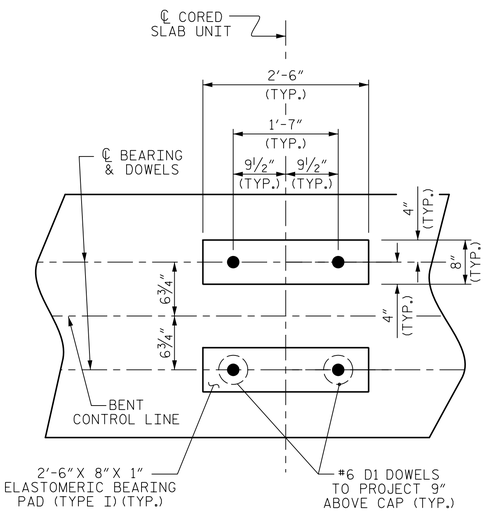

DETAIL "A"

(DIMENSIONS ARE TYPICAL EACH BEARING)

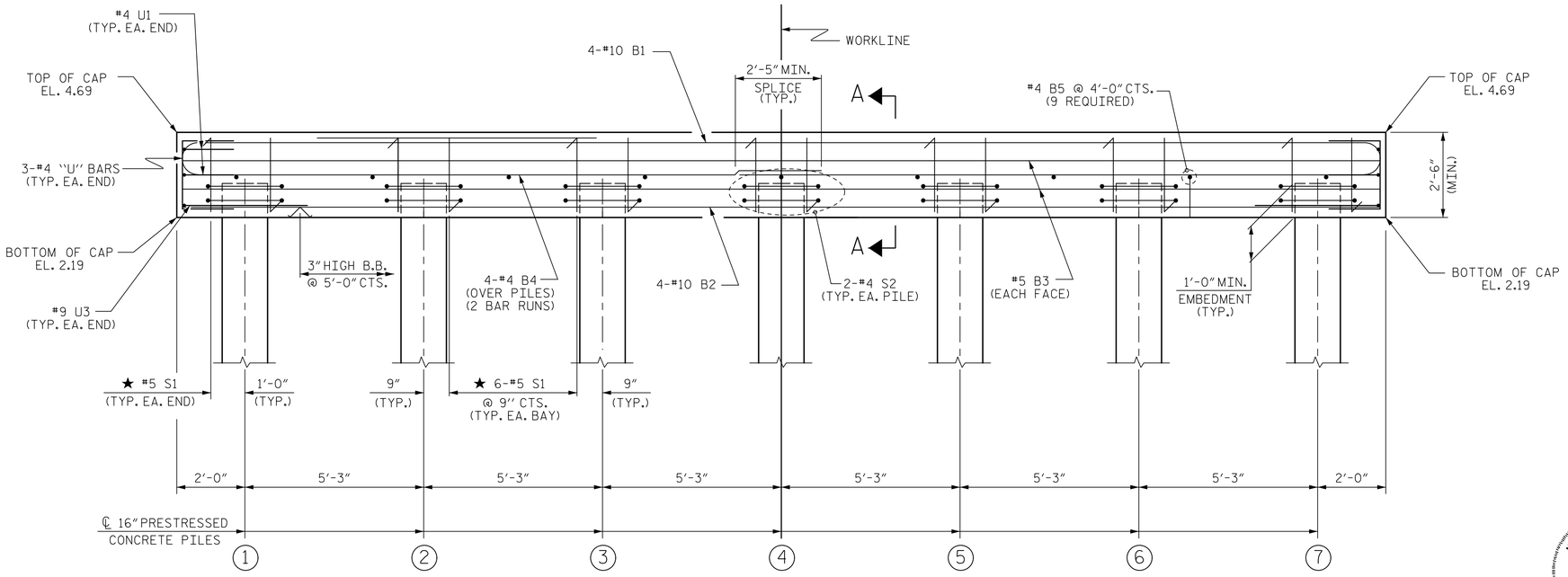

ELEVATION

FOR SECTION A-A, SEE SHEET 2 OF 2

PROJECT NO. 17BP.2.R.86

BEAUFORT COUNTY

STATION: 17+36.00 -L-

SHEET 2 OF 3

STATE OF NORTH CAROLINA
DEPARTMENT OF TRANSPORTATION
RALEIGH

SUBSTRUCTURE

BENT No. 2

NORTH CAROLINA PROFESSIONAL ENGINEER SEAL 22997 4/22/2019 JAMES J. BARCOMB

Docusigned by: James J. Barcomb 4/22/2019 | 10:32:39 AM PDT

ASSEMBLED BY : M. WRIGHT	DATE : 4/19		
CHECKED BY : J. BARCOMB	DATE : 4/19		
DRAWN BY : DGE 5/10	REV. 6/17	MAA/THC	
CHECKED BY : MKT 5/10			

DOCUMENT NOT CONSIDERED FINAL UNLESS ALL SIGNATURES COMPLETED

HNTB NORTH CAROLINA, P.C.
NC License No. C-1554
343 E. Six Forks Rd., Suite 200, Raleigh, N.C. 27609

DRAWN BY	M. WRIGHT	DATE	4/19
CHECKED BY	J. BARCOMB	DATE	4/19
DESIGN ENGINEER OF RECORD	J. BARCOMB	DATE	4/19

DWG. NO. 15

REVISIONS						SHEET NO.
NO.	BY	DATE	NO.	BY	DATE	S-15
1			3			TOTAL SHEETS
2			4			20

STD.NO. 16" PS_BT_33_90S_<60'

DocuSign Envelope ID: E0320412-C5FA-4DF1-9085-D274DF052AE7

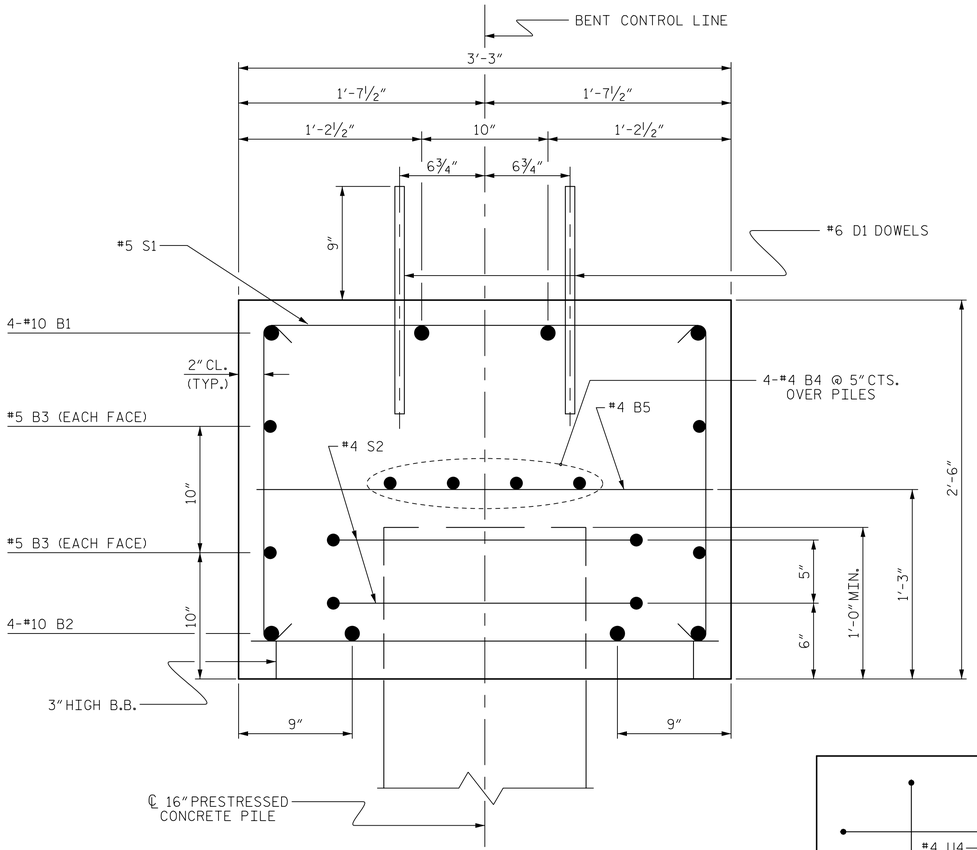

SECTION A-A

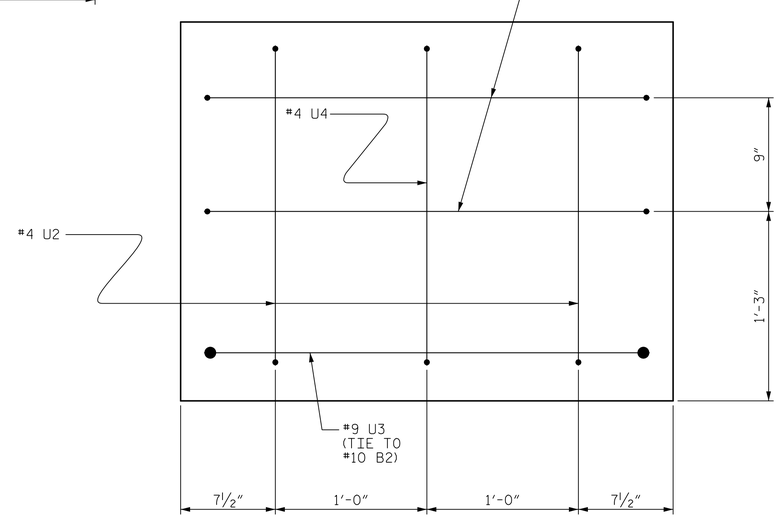

END OF CAP VIEW

(TYPICAL BOTH ENDS)

BAR TYPES

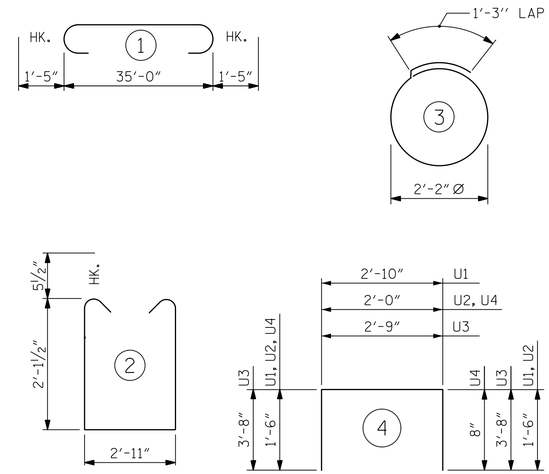

ALL BAR DIMENSIONS ARE OUT TO OUT.

BILL OF MATERIAL FOR ONE BENT

BAR	NO.	SIZE	TYPE	LENGTH	WEIGHT
B1	4	#10	1	37′-10″	651
B2	4	#10	STR	35′-2″	605
B3	4	#5	STR	35′-2″	147
B4	8	#4	STR	18′-10″	101
B5	9	#4	STR	2′-11″	18
D1	44	#6	STR	1′-6″	99
S1	38	#5	2	8′-1″	320
S2	14	#4	3	8′-1″	76
U1	4	#4	4	5′-10″	16
U2	4	#4	4	5′-0″	13
U3	2	#9	4	10′-1″	69
U4	2	#4	4	4′-2″	6

REINFORCING STEEL (FOR ONE BENT) 2121 LBS

CLASS A CONCRETE BREAKDOWN (FOR ONE BENT)

TOTAL CLASS A CONCRETE ▲ 10.2 C.Y.

16″ PRESTRESSED CONCRETE PILES (FOR ONE BENT)

No. 7 LIN. FT. 315

PILE DRIVING EQUIPMENT SETUP FOR 16″ PRESTRESSED CONCRETE PILES (FOR ONE BENT) No. 7

PILE REDRIVES NO: 4

▲ CONCRETE DISPLACED BY THE 16″ PRESTRESSED CONCRETE PILES HAS BEEN DEDUCTED FROM THE CONCRETE QUANTITY.

PROJECT NO. 17BP.2.R.86

BEAUFORT COUNTY

STATION: 17+36.00 -L-

SHEET 3 OF 3

STATE OF NORTH CAROLINA
DEPARTMENT OF TRANSPORTATION
RALEIGH

SUBSTRUCTURE

BENT No. 1 & 2

NORTH CAROLINA PROFESSIONAL ENGINEER SEAL 22997 4/22/2019 JAMES J. BARCOMB

Digitally signed by: James J. Barcomb
Date: 2019.04.22 09:29:48

REVISIONS						SHEET NO.
NO.	BY	DATE	NO.	BY	DATE	S-16
1			3			TOTAL SHEETS
2			4			20

HNTB NORTH CAROLINA, P.C.
NC License No. C-1554
343 E. Six Forks Rd., Suite 200, Raleigh, N.C. 27609

DRAWN BY M. WRIGHT DATE 4/19
CHECKED BY J. BARCOMB DATE 4/19
DESIGN ENGINEER OF RECORD J. BARCOMB DATE 4/19

DWG. NO. 16

ASSEMBLED BY : M. WRIGHT DATE : 4/19
CHECKED BY : J. BARCOMB DATE : 4/19

DRAWN BY : DGE 05/10
CHECKED BY : MKT 05/10
REV. 6/17 MAA/THC

DOCUMENT NOT CONSIDERED FINAL UNLESS ALL SIGNATURES COMPLETED

STD.NO. 16″PS_BT_33_90S_<60′

DocuSign Envelope ID: E0320412-C5FA-4DF1-9085-D274DF052AE7

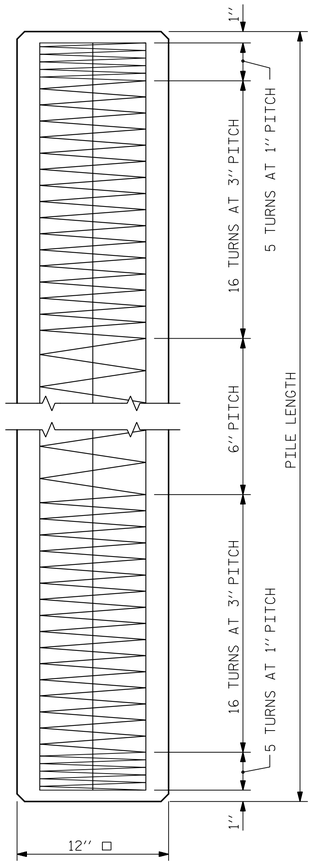

ELEVATION

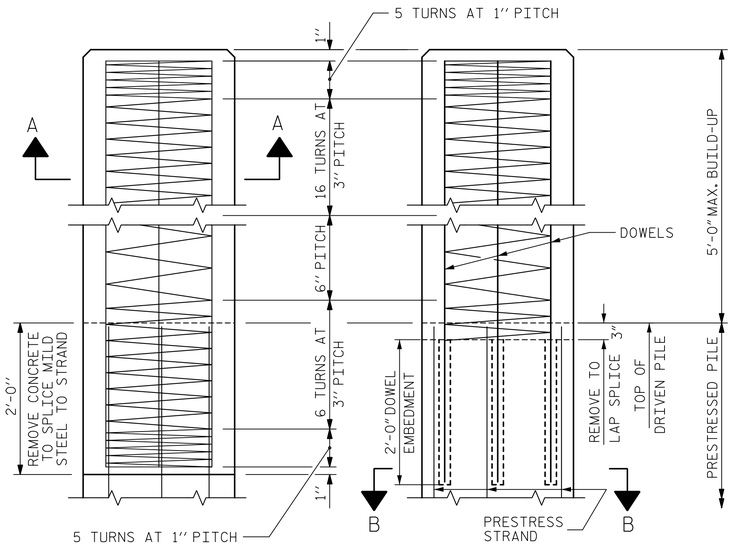

BUILD-UP AND SPIRAL REINFORCING

OPTIONAL BUILD-UP WITH DOWELS

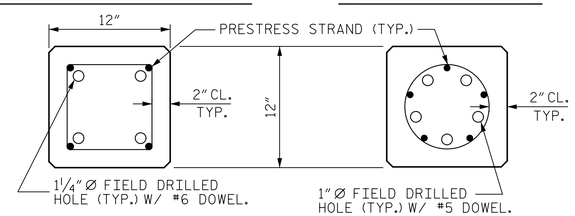

SECTION "B-B"

(AT THE CONTRACTOR'S OPTION, PILE BUILD-UP MAY BE CONSTRUCTED WITH DOWELS.)

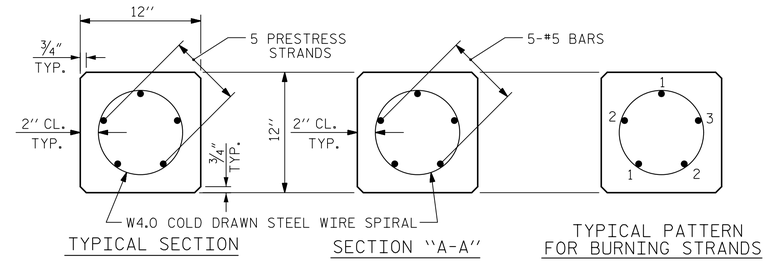

TYPICAL SECTION SECTION "A-A" TYPICAL PATTERN FOR BURNING STRANDS

½'' OR 0.6'' Ø GRADE 270 L.R. PRESTRESS STRANDS

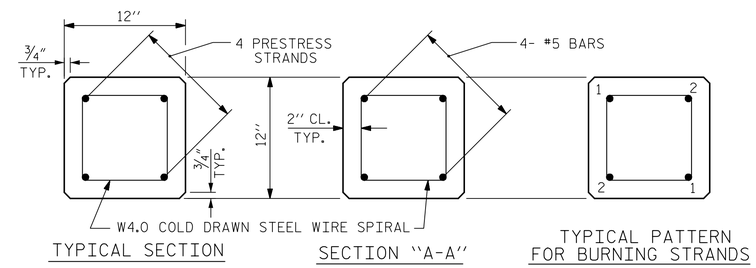

TYPICAL SECTION SECTION "A-A" TYPICAL PATTERN FOR BURNING STRANDS

½'' OR 0.6'' Ø GRADE 270 L.R. PRESTRESS STRANDS

PICK-UP POINTS

QUANTITIES FOR ONE 12'' PRESTRESSED PILE						
	CONCRETE	PILE WT.	ONE POINT PICK-UP		TWO POINT PICK-UP	
LENGTH	CU. YDS.	TONS	0.300L	0.700L	0.207L	0.586L
25'-0''	0.91	1.85	7'-6''	17'-6''		
30'-0''	1.10	2.22	9'-0''	21'-0''		
35'-0''	1.28	2.59	10'-6''	24'-6''		
40'-0''	1.46	2.96	12'-0''	28'-0''		
45'-0''	1.64	3.33	13'-6''	31'-6''		
50'-0''	1.83	3.72	15'-0''	35'-0''		
55'-0''	2.01	4.09			11'-4½''	32'-3''
60'-0''	2.19	4.46			12'-5''	35'-2''
65'-0''	2.38	4.81			13'-5½''	38'-1''
70'-0''	2.57	5.18			14'-6''	41'-0''

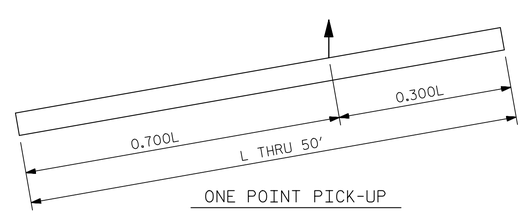

ONE POINT PICK-UP

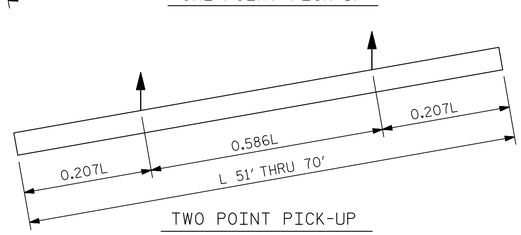

TWO POINT PICK-UP

NOTES

PRESTRESSED CONCRETE STRENGTH : f'c= 7,500 PSI

BUILD-UP CONCRETE STRENGTH : f'c= 7,500 PSI

STRAND DATA:

SIZE	GRADE	AREA	ULTIMATE STRENGTH	APPLIED PRESTRESS FORCE
½''	270 L.R.	0.153	41,300# PER STRAND	30,980# PER STRAND
0.6''	270 L.R.	0.217	58,600# PER STRAND	43,940# PER STRAND

ALL PRESTRESSING STRANDS SHALL BE 7-WIRE LOW-RELAXATION GRADE 270 STRANDS CONFORMING TO AASHTO M203. STRAND SAMPLING REQUIREMENTS SHALL BE IN ACCORDANCE WITH THE STANDARD SPECIFICATIONS.

AT THE CONTRACTOR'S OPTION, ½'' OR 0.6'' STRANDS MAY BE USED IN EITHER THE 4 OR 5 STRAND CONFIGURATION SHOWN IN THE TYPICAL SECTION DETAIL. MIXING OF STRAND SIZE IS NOT ALLOWED.

THE SLIP-FORM METHOD OF CASTING PILES WILL NOT BE PERMITTED.

TRANSFER THE LOAD FROM THE ANCHORAGES TO THE PILE AFTER THE CONCRETE HAS ATTAINED A MINIMUM COMPRESSIVE STRENGTH OF 4,000 PSI.

IF STRAND STRESS IS RELIEVED BY BURNING, THE STRANDS SHALL BE BURNED IN PAIRS, EXCEPT WHERE 5 STRANDS ARE USED, THE LAST STRAND MAY BE BURNED SINGLY ACCORDING TO BURNING PATTERNS SHOWN. NOT MORE THAN 4 STRANDS MAY BE BURNED AT ANY ONE SECTION BEFORE THE SAME STRANDS ARE BURNED AT BOTH ENDS OF THE BED AND BETWEEN EACH PAIR OF PILES IN THE BED.

PROPOSED DEVICES FOR LIFTING PILES, RECESS DETAILS, AND PATCHING MATERIAL SHALL BE DETAILED IN SHOP DRAWINGS. AFTER ATTACHMENTS HAVE BEEN REMOVED, OPENINGS SHALL BE REPAIRED SUCH THAT THE APPEARANCE OF THE PILE IS UNIFORM.

WHERE CAST-IN-PLACE LIFTING DEVICES ARE NOT USED, PICK-UP POINTS ARE TO BE INDICATED WITH A 2'' WIDE BLACK MARK.

DRIVE PILES USING A METHOD APPROVED BY THE ENGINEER, WHEREBY THE HEAD OF THE PILE IS NOT DAMAGED.

DRIVING OF THE BUILT-UP PILE WILL NOT BE PERMITTED UNTIL THE CONCRETE HAS REACHED A COMPRESSIVE STRENGTH OF 5,000 PSI AND UNTIL A PERIOD OF SEVEN DAYS HAS ELAPSED SINCE CASTING OF THE BUILD-UP.

DOWEL INSTALLATION FOR OPTIONAL BUILD-UP

GROUT COMPRESSIVE STRENGTH: f'c= 5,000 PSI

BEFORE DRILLING DOWEL HOLES, REMOVE THE UPPER 3" OF CONCRETE FROM THE TOP OF THE PILE WITHOUT DAMAGE TO THE REINFORCING STEEL. THE REMOVAL PLANE SHOULD BE NORMAL TO THE EDGE OF THE PILE.

DOWEL HOLES SHALL BE POSITIONED TO MAINTAIN ½" CLEAR TO ALL EXISTING PRESTRESSING STRANDS IN THE CONCRETE PILE.

FIELD DRILLED HOLES SHALL BE CLEAN AND FREE OF ANY OBSTRUCTIONS BEFORE GROUTING OF DOWELS. DOWEL BARS SHALL BE INSTALLED AND GROUTED WITH AN APPROVED NON-SHRINK GROUT.

THE SPIRAL REINFORCING IN ALL BUILD-UPS SHALL BE W4.0 COLD DRAWN WIRE WHICH SHALL BE SECURED TO THE LONGITUDINAL REINFORCEMENT TO MAINTAIN PITCH.

THE SPIRAL REINFORCING IN THE BUILD-UP AND THE PRESTRESSED CONCRETE PILE SHALL BE SPLICED BY OVERLAPPING A MIN. OF ONE TURN.

PROJECT NO. 17BP.2.R.86

BEAUFORT COUNTY

STATION: 17+36.00 -L-

STEEL PILE TIP DETAILS

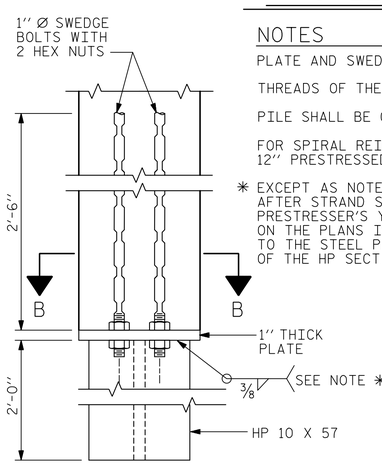

ELEVATION

NOTES

PLATE AND SWEDGE BOLTS SHALL MEET THE REQUIREMENTS OF AASHTO M270 GRADE 36.

THREADS OF THE SWEDGE BOLTS SHALL BE BURRED AT THE FACE OF THE NUT.

PILE SHALL BE CAST WITH SWEDGE BOLTS AND PLATE IN PLACE.

FOR SPIRAL REINFORCING AND PRESTRESSING STRAND DETAILS, SEE STANDARD 12'' PRESTRESSED CONCRETE PILE ELEVATION AND TYPICAL SECTION.

✳ EXCEPT AS NOTED BELOW, THE HP 10 X 57 SECTION SHALL BE WELDED TO THE STEEL PLATE AFTER STRAND STRESS IS RELIEVED. THE HP 10 X 57 SECTION MAY BE WELDED IN THE PRESTRESSER'S YARD OR IN THE FIELD. WHEN A CIRCULAR STRAND PATTERN AS SHOWN ON THE PLANS IS USED, THE CONTRACTOR, AT HIS OPTION, MAY WELD THE HP 10 X 57 SECTION TO THE STEEL PLATE AT THE FABRICATION PLANT PRIOR TO PLACING THE CONCRETE. THE FLANGES OF THE HP SECTION SHALL BE PARALLEL TO THE EDGES OF THE STEEL PLATE AND CONCRETE PILE.

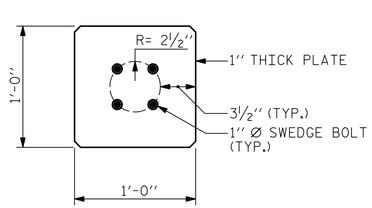

SECTION B-B

(HOLES FOR STRANDS NOT SHOWN)

ASSEMBLED BY : M. WRIGHT	DATE : 4/19		
CHECKED BY : J. BARCOMB	DATE : 4/19		
DRAWN BY : FCJ 7/88	REV. 10/1/11	MAA/GM	
CHECKED BY : CRK 3/89	REV. 12/14	MAA/TMG	
	REV. 12/17	MAA/THC	

DOCUMENT NOT CONSIDERED FINAL UNLESS ALL SIGNATURES COMPLETED

HNTB NORTH CAROLINA, P.C.
NC License No. C-1554
343 E. Six Forks Rd., Suite 200, Raleigh, N.C. 27609

DRAWN BY M. WRIGHT DATE 4/19
CHECKED BY J. BARCOMB DATE 4/19
DESIGN ENGINEER OF RECORD J. BARCOMB DATE 4/19

DWG. NO. 17

NORTH CAROLINA PROFESSIONAL SEAL 22997 ENGINEER JAMES J. BARCOMB
DocuSigned by: James J. Barcomb
4/22/2019

STATE OF NORTH CAROLINA
DEPARTMENT OF TRANSPORTATION
RALEIGH

STANDARD

12'' PRESTRESSED CONCRETE PILE

REVISIONS						SHEET NO.
NO.	BY	DATE	NO.	BY	DATE	S-17
1			3			TOTAL SHEETS
2			4			20

STD. NO. PCP1

DocuSign Envelope ID: E0320412-C5FA-4DF1-9085-D274DF052AE7

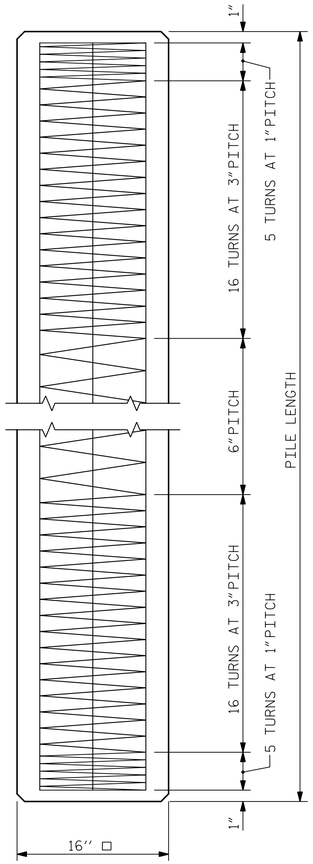

ELEVATION

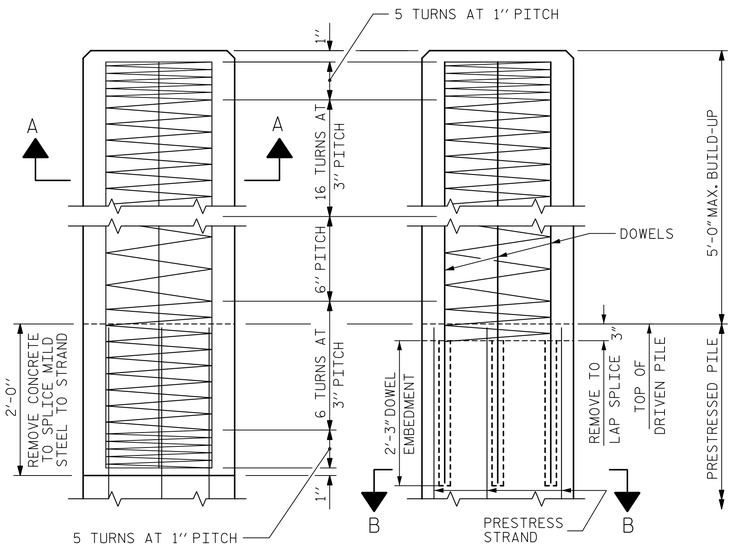

BUILD-UP AND SPIRAL REINFORCING

OPTIONAL BUILD-UP WITH DOWELS

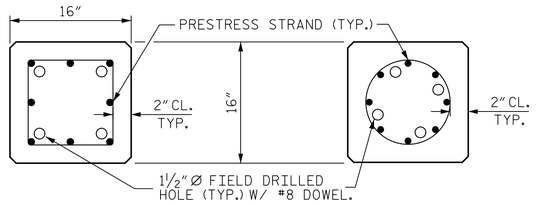

SECTION "B-B"

(AT THE CONTRACTOR'S OPTION, PILE BUILD-UP MAY BE CONSTRUCTED WITH DOWELS.)

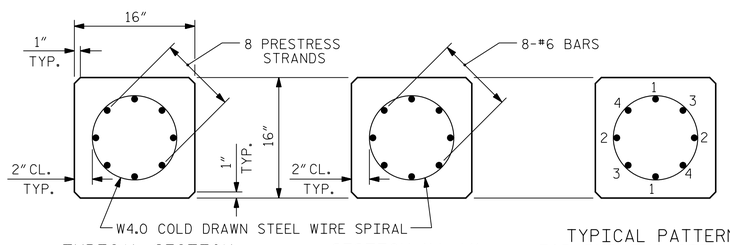

TYPICAL SECTION

SECTION "A-A"

TYPICAL PATTERN FOR BURNING STRANDS

½" OR 0.6" Ø GRADE 270 L.R. PRESTRESS STRANDS

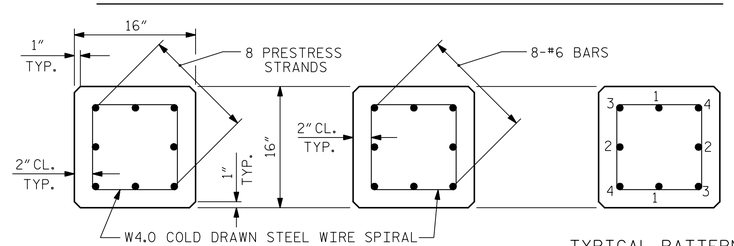

TYPICAL SECTION

SECTION "A-A"

TYPICAL PATTERN FOR BURNING STRANDS

½" OR 0.6" Ø GRADE 270 L.R. PRESTRESS STRANDS

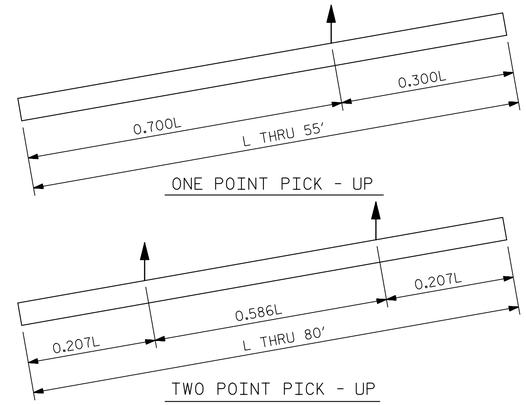

PICK - UP POINTS

QUANTITIES FOR ONE 16" PRESTRESSED PILE

LENGTH	CONCRETE CU. YDS.	PILE WT. TONS	ONE POINT PICK-UP 0.300L	ONE POINT PICK-UP 0.700L	TWO POINT PICK-UP 0.207L	TWO POINT PICK-UP 0.586L
25'-0"	1.63	3.31	7'-6"	17'-6"	5'-2"	14'-8"
30'-0"	1.96	3.97	9'-0"	21'-0"	6'-2½"	17'-7"
35'-0"	2.29	4.63	10'-6"	24'-6"	7'-3"	20'-6"
40'-0"	2.61	5.29	12'-0"	28'-0"	8'-3½"	23'-5"
45'-0"	2.94	5.95	13'-6"	31'-6"	9'-4"	26'-4"
50'-0"	3.27	6.61	15'-0"	35'-0"	10'-4"	29'-4"
55'-0"	3.59	7.28	16'-6"	38'-6"	11'-4½"	32'-3"
60'-0"	3.92	7.94			12'-5"	35'-2"
65'-0"	4.25	8.60			13'-5½"	38'-1"
70'-0"	4.57	9.26			14'-6"	41'-0"
75'-0"	4.90	9.92			15'-6½"	43'-11"
80'-0"	5.23	10.58			16'-7"	46'-10"

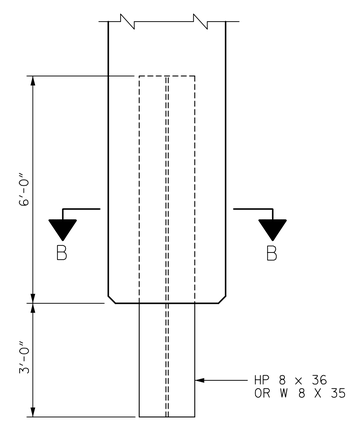

ELEVATION

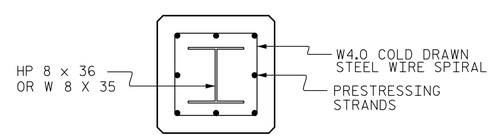

SECTION B-B

PILE TIP DETAILS

FOR 16" SQUARE PRESTRESSED CONCRETE PILE

NOTES

PRESTRESSED CONCRETE STRENGTH : f'c= 7,500 PSI

BUILD-UP CONCRETE STRENGTH : f'c= 7,500 PSI

STRAND DATA:

SIZE	GRADE	AREA	ULTIMATE STRENGTH	APPLIED PRESTRESS FORCE
½"	270 L.R.	0.153	41,300# PER STRAND	30,980# PER STRAND
0.6"	270 L.R.	0.217	58,600# PER STRAND	43,940# PER STRAND

ALL PRESTRESSING STRANDS SHALL BE 7-WIRE LOW-RELAXATION GRADE 270 STRANDS CONFORMING TO AASHTO M203. STRAND SAMPLING REQUIREMENTS SHALL BE IN ACCORDANCE WITH THE STANDARD SPECIFICATIONS.

AT THE CONTRACTOR'S OPTION, ½" OR 0.6" STRANDS MAY BE USED IN EITHER STRAND CONFIGURATION SHOWN IN THE TYPICAL SECTION DETAIL. MIXING OF STRAND SIZE IS NOT ALLOWED.

THE SLIP-FORM METHOD OF CASTING PILES WILL NOT BE PERMITTED.

TRANSFER THE LOAD FROM THE ANCHORAGES TO THE PILE AFTER THE CONCRETE HAS ATTAINED A MINIMUM COMPRESSIVE STRENGTH OF 4,000 PSI.

IF STRAND STRESS IS RELIEVED BY BURNING, THE STRANDS SHALL BE BURNED IN OPPOSITE PAIRS AS INDICATED IN THE TYPICAL PATTERN SHOWN. FOR ANY NUMBER OF STRANDS, BURN IN OPPOSITE PAIRS AND SYMMETRICALLY ABOUT BOTH THE VERTICAL AND HORIZONTAL AXES. STRANDS 1-1 SHALL BE BURNED BEFORE 2-2, ETC. NOT MORE THAN 4 STRANDS, SAY 3-3 AND 4-4, MAY BE BURNED AT ANY ONE SECTION BEFORE THESE SAME PAIRS OF STRANDS ARE BURNED AT BOTH ENDS OF THE BED AND BETWEEN EACH PAIR OF PILES IN THE BED.

PROPOSED DEVICES FOR LIFTING PILES, RECESS DETAILS, AND PATCHING MATERIAL SHALL BE DETAILED IN SHOP DRAWINGS. AFTER ATTACHMENTS HAVE BEEN REMOVED, OPENINGS SHALL BE REPAIRED SUCH THAT THE APPEARANCE OF THE PILE IS UNIFORM.

WHERE CAST-IN-PLACE LIFTING DEVICES ARE NOT USED, PICK-UP POINTS ARE TO BE INDICATED WITH A 2" WIDE BLACK MARK.

DRIVE PILES USING A METHOD APPROVED BY THE ENGINEER, WHEREBY THE HEAD OF THE PILE IS NOT DAMAGED.

DRIVING OF THE BUILT-UP PILE WILL NOT BE PERMITTED UNTIL THE CONCRETE HAS REACHED A COMPRESSIVE STRENGTH OF 5,000 PSI AND UNTIL A PERIOD OF SEVEN DAYS HAS ELAPSED SINCE CASTING OF THE BUILD-UP.

DOWEL INSTALLATION FOR OPTIONAL BUILD-UP

GROUT COMPRESSIVE STRENGTH: f'c= 5,000 PSI

BEFORE DRILLING DOWEL HOLES, REMOVE THE UPPER 3" OF CONCRETE FROM THE TOP OF THE PILE WITHOUT DAMAGE TO THE REINFORCING STEEL. THE REMOVAL PLANE SHOULD BE NORMAL TO THE EDGE OF THE PILE.

DOWEL HOLES SHALL BE POSITIONED TO MAINTAIN ½" CLEAR TO ALL EXISTING PRESTRESSING STRANDS IN THE CONCRETE PILE.

FIELD DRILLED HOLES SHALL BE CLEAN AND FREE OF ANY OBSTRUCTIONS BEFORE GROUTING OF DOWELS. DOWEL BARS SHALL BE INSTALLED AND GROUTED WITH AN APPROVED NON-SHRINK GROUT.

THE SPIRAL REINFORCING IN ALL BUILD-UPS SHALL BE W4.0 COLD DRAWN WIRE WHICH SHALL BE SECURED TO THE LONGITUDINAL REINFORCEMENT TO MAINTAIN PITCH.

THE SPIRAL REINFORCING IN THE BUILD-UP AND THE PRESTRESSED CONCRETE PILE SHALL BE SPLICED BY OVERLAPPING A MIN. OF ONE TURN.

PROJECT NO. 17BP.2.R.86

BEAUFORT COUNTY

STATION: 17+36.00 -L-

STATE OF NORTH CAROLINA
DEPARTMENT OF TRANSPORTATION
RALEIGH

STANDARD

16" PRESTRESSED CONCRETE PILE

NORTH CAROLINA PROFESSIONAL ENGINEER SEAL 22997 4/22/2019 JAMES J. BARCOMB

Docu Sign Envelope ID: 0320412-C5FA-4DF1-9085-D274DF052AE7
Docusigned by: James J. Barcomb

HNTB NORTH CAROLINA, P.C.
NC License No. C-1554
343 E. Six Forks Rd., Suite 200, Raleigh, N.C. 27609

DRAWN BY M. WRIGHT DATE 4/19
CHECKED BY J. BARCOMB DATE 4/19
DESIGN ENGINEER OF RECORD J. BARCOMB DATE 4/19

DWG. NO. 18

DOCUMENT NOT CONSIDERED FINAL UNLESS ALL SIGNATURES COMPLETED

REVISIONS						SHEET NO.
NO.	BY	DATE	NO.	BY	DATE	S-18
1			3			TOTAL SHEETS
2			4			20

ASSEMBLED BY : M. WRIGHT DATE : 4/19
CHECKED BY : J. BARCOMB DATE : 4/19

DRAWN BY : RH 9/98
CHECKED BY : LES 10/98

REV. 10/1/11 MAA/GM
REV. 12/14 MAA/TMG
REV. 12/17 MAA/THC

STD. NO. PCP2

DocuSign Envelope ID: E0320412-C5FA-4DF1-9085-D274DF052AE7

NOTES :

FOR BERM WIDTH DIMENSIONS, SEE GENERAL DRAWING.

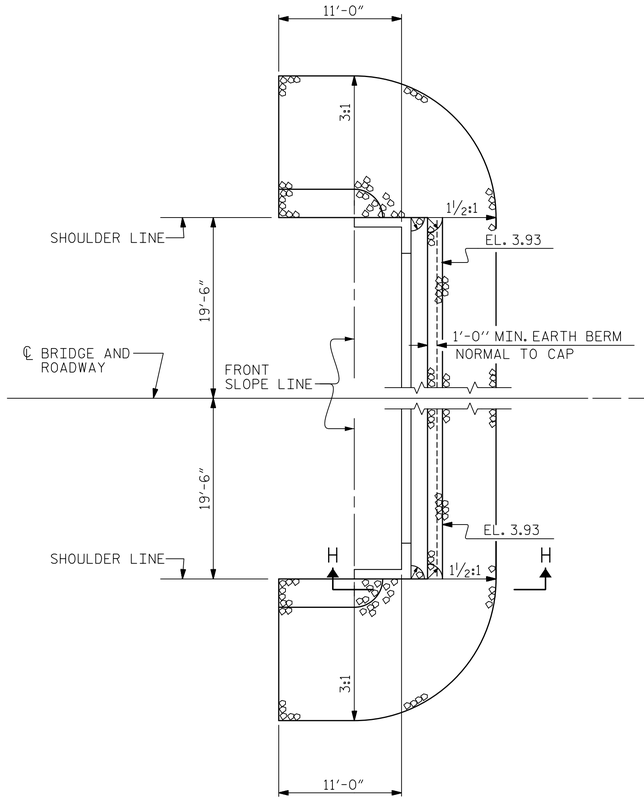

END BENT 1

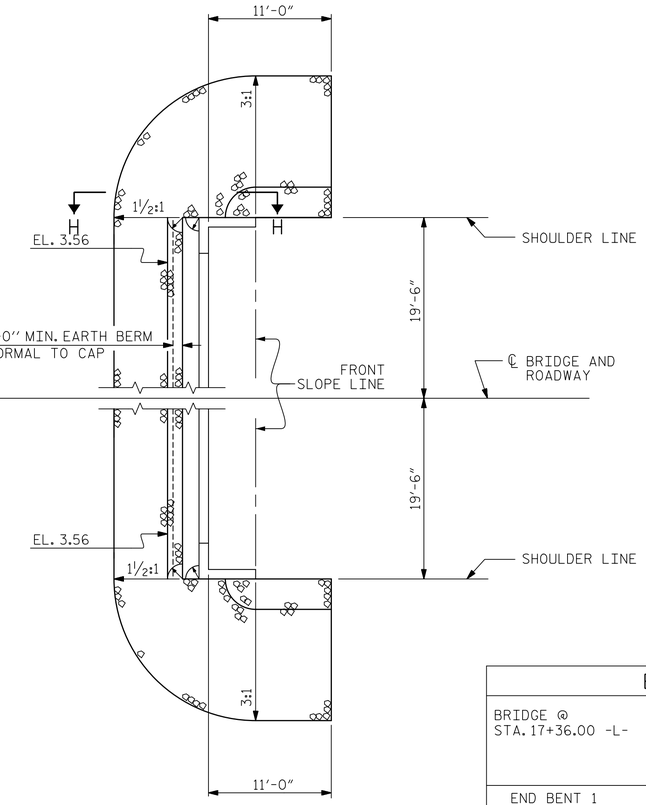

END BENT 2

ESTIMATED QUANTITIES		
BRIDGE @ STA. 17+36.00 -L-	RIP RAP CLASS II (2'-0" THICK)	GEOTEXTILE FOR DRAINAGE
	TONS	SQUARE YARDS
END BENT 1	125	140
END BENT 2	115	130

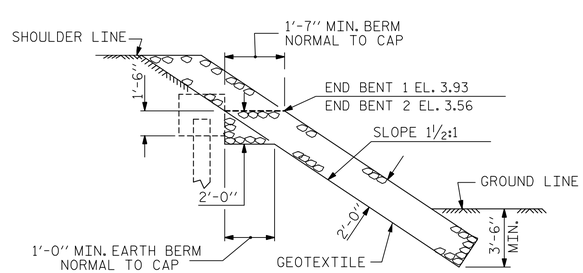

SECTION H-H

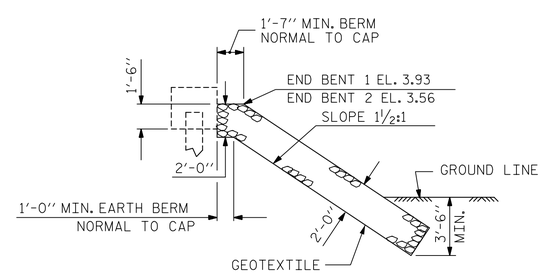

℄ SECTION
BERM RIP RAPPED

PROJECT NO. 17BP.2.R.86

BEAUFORT COUNTY

STATION: 17+36.00 -L-

NORTH CAROLINA PROFESSIONAL ENGINEER SEAL 22997 4/22/2019 JAMES J. BARCOMB

Digitally signed by: James J. Barcomb
PROFESSIONAL ENGINEER
Date: 2019.04.22 08:58:58

STATE OF NORTH CAROLINA
DEPARTMENT OF TRANSPORTATION
RALEIGH

STANDARD

RIP RAP DETAILS

ASSEMBLED BY : M. WRIGHT	DATE : 4/19		
CHECKED BY : J. BARCOMB	DATE : 4/19		
DRAWN BY : REK 1/84	REV. 10/1/11	MAA/GM	
CHECKED BY : RDU 1/84	REV. 12/21/11	MAA/GM	
	REV. 12/17	MAA/THC	

DOCUMENT NOT CONSIDERED FINAL UNLESS ALL SIGNATURES COMPLETED

HNTB NORTH CAROLINA, P.C.
NC License No. C-1554
343 E. Six Forks Rd., Suite 200, Raleigh, N.C. 27609

DRAWN BY	M. WRIGHT	DATE	4/19
CHECKED BY	J. BARCOMB	DATE	4/19
DESIGN ENGINEER OF RECORD	J. BARCOMB	DATE	4/19

DWG. NO. 19

REVISIONS						SHEET NO.
NO.	BY	DATE	NO.	BY	DATE	S-19
1			3			TOTAL SHEETS
2			4			20

STD. NO. RR1

DocuSign Envelope ID: E0320412-C5FA-4DF1-9085-D274DF052AE7

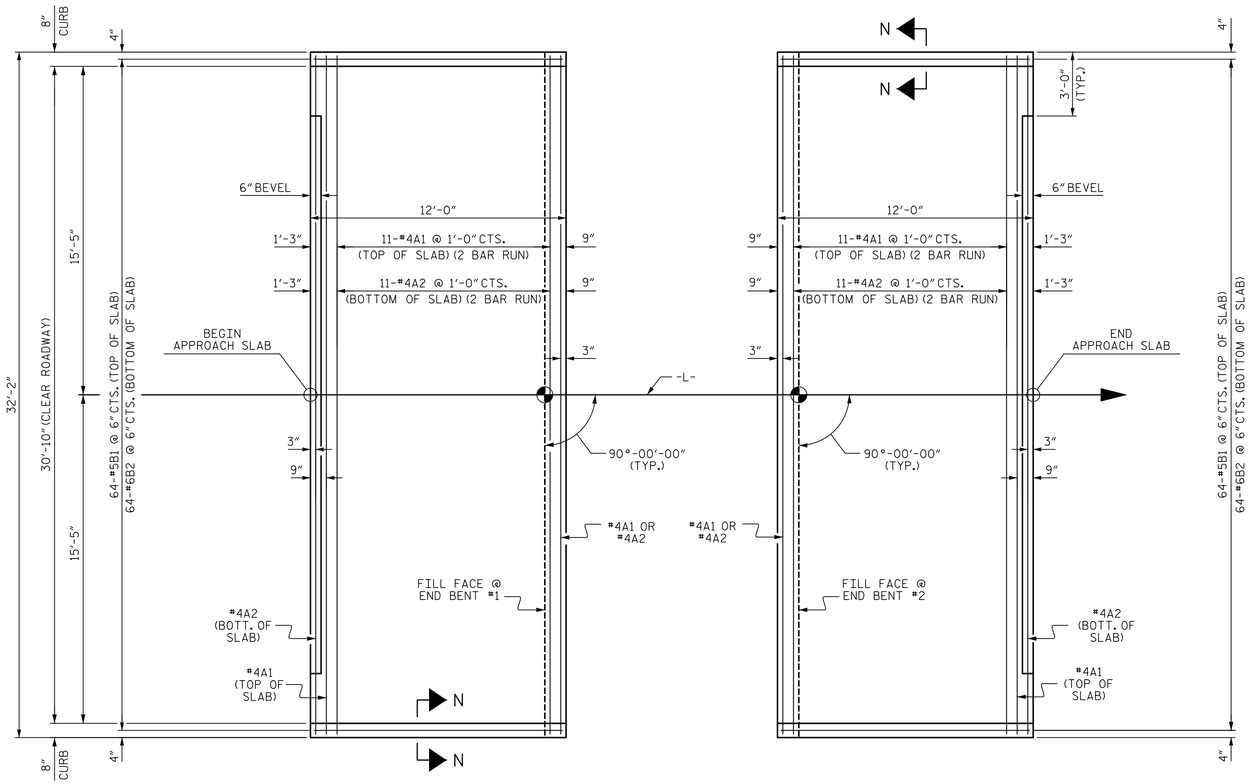

PLAN @ END BENT #1

PLAN @ END BENT #2

DIMENSIONS SHOWN ARE TYPICAL FOR BOTH APPROACH SLABS

NOTES

FOR BRIDGE APPROACH FILL INCLUDING GEOTEXTILE, 4"Ø DRAINAGE PIPE, AND SELECT MATERIAL BACKFILL, SEE ROADWAY PLANS.

GEOTEXTILE SHALL BE TYPE 1 IN ACCORDANCE WITH THE STANDARD SPECIFICATIONS SECTION 1056.

SELECT MATERIAL BACKFILL (CLASS V OR CLASS VI) SHALL BE IN ACCORDANCE WITH STANDARD SPECIFICATIONS SECTION 1016.

SELECT MATERIAL BACKFILL IS TO BE CONTINUOUS ALONG FILL FACE OF BACKWALL FROM OUTSIDE EDGE TO OUTSIDE EDGE OF APPROACH SLAB.

FOR THE 4"Ø DRAINAGE PIPE OUTLET(S), SEE ROADWAY STANDARD DRAWINGS.

AREA BETWEEN THE WINGWALL AND APPROACH SLAB SHALL BE GRADED TO DRAIN THE WATER AWAY FROM THE FILL FACE OF THE BRIDGE AND SHALL BE PAVED. SEE ROADWAY PLANS.

APPROACH SLAB GROOVING IS NOT REQUIRED.

BILL OF MATERIAL

APPROACH SLAB AT EB #1

BAR	NO.	SIZE	TYPE	LENGTH	WEIGHT
* A1	26	#4	STR	16'-11"	294
A2	26	#4	STR	16'-9"	291
* B1	64	#5	STR	11'-2"	745
B2	64	#6	STR	11'-8"	1121
REINFORCING STEEL				LBS.	1412
* EPOXY COATED REINFORCING STEEL				LBS.	1039
CLASS AA CONCRETE				C.Y.	18.4

APPROACH SLAB AT EB #2

BAR	NO.	SIZE	TYPE	LENGTH	WEIGHT
* A1	26	#4	STR	16'-11"	294
A2	26	#4	STR	16'-9"	291
* B1	64	#5	STR	11'-2"	745
B2	64	#6	STR	11'-8"	1121
REINFORCING STEEL				LBS.	1412
* EPOXY COATED REINFORCING STEEL				LBS.	1039
CLASS AA CONCRETE				C.Y.	18.4

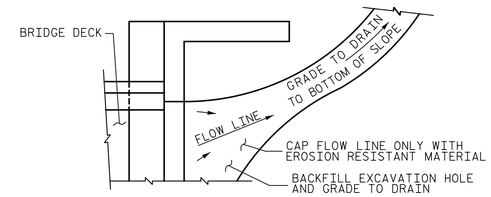

NOTE: IF THE APPROACH SLAB IS NOT CONSTRUCTED IMMEDIATELY AFTER THE BACKFILLING OF THE END BENT EXCAVATION, GRADE TO DRAIN TO THE BOTTOM OF THE SLOPE AND PROVIDE EROSION RESISTANT MATERIAL, SUCH AS FIBERGLASS ROVING OR AS DIRECTED BY THE ENGINEER TO PREVENT SOIL EROSION AND TO PROTECT THE AREA ADJACENT TO THE STRUCTURE. THE CONTRACTOR WILL BE REQUIRED TO REMOVE THESE MATERIALS PRIOR TO CONSTRUCTION OF THE APPROACH SLAB.

TEMPORARY DRAINAGE DETAIL

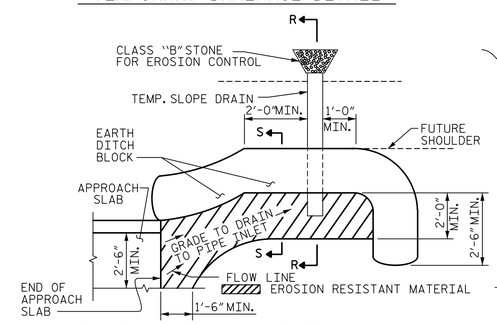

NOTE: IMMEDIATELY AFTER THE CONSTRUCTION OF THE APPROACH SLAB, THE CONTRACTOR SHALL PROVIDE TEMPORARY BERM AND SLOPE DRAIN. CONTRACTOR SHALL GRADE TO PIPE INLET AND PROVIDE EROSION RESISTANT MATERIAL AS SHOWN. THE EROSION RESISTANT MATERIAL SHALL BE EITHER 1) ASPHALT PLANT MIX, TYPE 1 OR TYPE 2, MIN. 2" DEPTH, 2) EROSION CONTROL MAT, OR 3) CONCRETE, AS DIRECTED BY THE ENGINEER. THE SLOPE DRAIN SHALL CONSIST OF A NON-PERFORATED TEMPORARY DRAINAGE PIPE, 12 INCHES IN DIAMETER.

PLAN VIEW

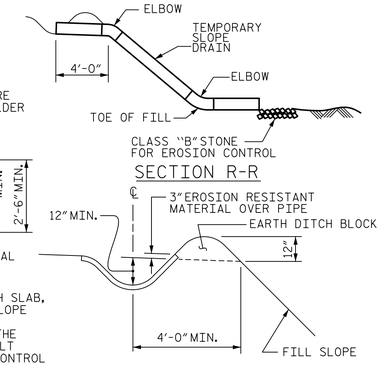

TEMPORARY BERM AND SLOPE DRAIN DETAILS

(TO BE USED WHEN SHOULDER BERM GUTTER IS REQUIRED)

SPLICE LENGTHS		
BAR SIZE	EPOXY COATED	UNCOATED
#4	2'-0"	1'-9"
#5	2'-6"	2'-2"
#6	3'-10"	2'-7"

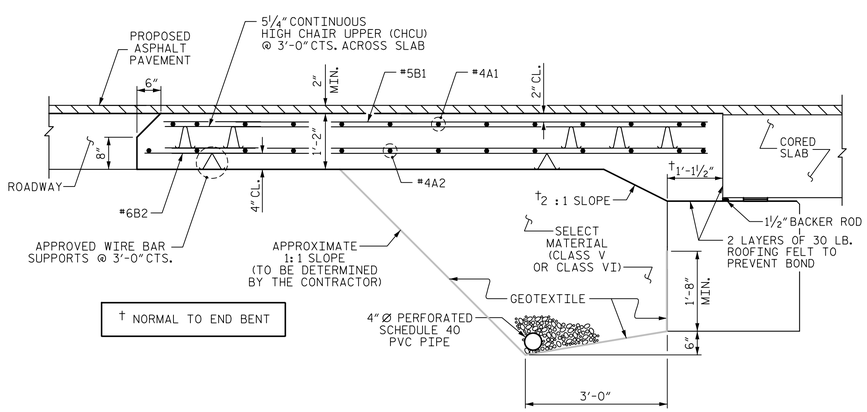

† NORMAL TO END BENT

SECTION THRU SLAB

(TYPE II - MODIFIED APPROACH FILL)

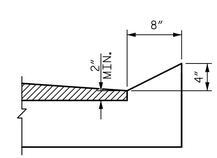

SECTION N-N

CURB DETAILS

PROJECT NO. 17BP.2.R.86

BEAUFORT COUNTY

STATION: 17+36.00 -L-

STATE OF NORTH CAROLINA
DEPARTMENT OF TRANSPORTATION
RALEIGH

STANDARD
BRIDGE APPROACH SLAB
FOR PRESTRESSED CONCRETE
CORED SLAB UNIT
(SUB-REGIONAL TIER)
90° SKEW

ASSEMBLED BY : M. WRIGHT	DATE : 4/19
CHECKED BY : J. BARCOMB	DATE : 4/19
DRAWN BY : SHS/MAA 5-09	REV. 12-17 MAA/THC
CHECKED BY : BCH 5-09	

DOCUMENT NOT CONSIDERED FINAL UNLESS ALL SIGNATURES COMPLETED

HNTB NORTH CAROLINA, P.C.
NC License No. C-1554
343 E. Six Forks Rd., Suite 200, Raleigh, N.C. 27609

DRAWN BY M. WRIGHT DATE 4/19
CHECKED BY J. BARCOMB DATE 4/19
DESIGN ENGINEER OF RECORD J. BARCOMB DATE 4/19

DWG. NO. 20

REVISIONS						SHEET NO.
NO.	BY	DATE	NO.	BY	DATE	S-20
1			3			TOTAL SHEETS
2			4			20

STD. NO. BAS_33_90S

DocuSign Envelope ID: E0320412-C5FA-4DF1-9085-D274DF052AE7

STANDARD NOTES

DESIGN DATA:

SPECIFICATIONS	A.A.S.H.T.O. (CURRENT)
LIVE LOAD	SEE PLANS
IMPACT ALLOWANCE	SEE A.A.S.H.T.O.
STRESS IN EXTREME FIBER OF STRUCTURAL STEEL - AASHTO M270 GRADE 36	20,000 LBS. PER SQ. IN.
- AASHTO M270 GRADE 50W	27,000 LBS. PER SQ. IN.
- AASHTO M270 GRADE 50	27,000 LBS. PER SQ. IN.
REINFORCING STEEL IN TENSION - GRADE 60	24,000 LBS. PER SQ. IN.
CONCRETE IN COMPRESSION	1,200 LBS. PER SQ. IN.
CONCRETE IN SHEAR	SEE A.A.S.H.T.O.
STRUCTURAL TIMBER - TREATED OR UNTREATED EXTREME FIBER STRESS	1,800 LBS. PER SQ. IN.
COMPRESSION PERPENDICULAR TO GRAIN OF TIMBER	375 LBS. PER SQ. IN.
EQUIVALENT FLUID PRESSURE OF EARTH	30 LBS. PER CU. FT. (MINIMUM)

MATERIAL AND WORKMANSHIP:

EXCEPT AS MAY OTHERWISE BE SPECIFIED ON PLANS OR IN THE SPECIAL PROVISIONS, ALL MATERIAL AND WORKMANSHIP SHALL BE IN ACCORDANCE WITH THE 2018 "STANDARD SPECIFICATIONS FOR ROADS AND STRUCTURES" OF THE N. C. DEPARTMENT OF TRANSPORTATION.

STEEL SHEET PILING FOR PERMANENT OR TEMPORARY APPLICATIONS SHALL BE HOT ROLLED.

CONCRETE:

UNLESS OTHERWISE REQUIRED ON PLANS, CLASS A CONCRETE SHALL BE USED FOR ALL PORTIONS OF ALL STRUCTURES WITH THE EXCEPTION THAT: CLASS AA CONCRETE SHALL BE USED IN BRIDGE SUPERSTRUCTURES, ABUTMENT BACKWALLS, AND APPROACH SLABS; AND CLASS B CONCRETE SHALL BE USED FOR SLOPE PROTECTION AND RIP RAP.

CONCRETE CHAMFERS:

UNLESS OTHERWISE NOTED ON THE PLANS, ALL EXPOSED CORNERS ON STRUCTURES SHALL BE CHAMFERED ¾" WITH THE FOLLOWING EXCEPTIONS: TOP CORNERS OF CURBS MAY BE ROUNDED TO 1½" RADIUS WHICH IS BUILT INTO CURB FORMS; CORNERS OF TRANSVERSE FLOOR EXPANSION JOINTS SHALL BE ROUNDED WITH A ¼" FINISHING TOOL UNLESS OTHERWISE REQUIRED ON PLANS; AND CORNERS OF EXPANSION JOINTS IN THE ROADWAY FACES AND TOPS OF CURBS AND SIDEWALKS SHALL BE ROUNDED TO A ¼" RADIUS WITH A FINISHING STONE OR TOOL UNLESS OTHERWISE REQUIRED ON PLANS.

DOWELS:

DOWELS WHEN INDICATED ON PLANS AS FOR CULVERT EXTENSIONS, SHALL BE EMBEDDED AT LEAST 12" INTO THE OLD CONCRETE AND GROUTED INTO PLACE WITH 1:2 CEMENT MORTAR.

ALLOWANCE FOR DEAD LOAD DEFLECTION, SETTLEMENT, ETC. IN CASTING SUPERSTRUCTURES:

BRIDGES SHALL BE BUILT ON THE GRADE OR VERTICAL CURVE SHOWN ON PLANS. SLABS, CURBS AND PARAPETS SHALL CONFORM TO THE GRADE OR CURVE.

ALL DIMENSIONS WHICH ARE GIVEN IN SECTION AND ARE AFFECTED BY DEAD LOAD DEFLECTIONS ARE DIMENSIONS AT CENTER LINE OF BEARING UNLESS OTHERWISE NOTED ON PLANS. IN SETTING FORMS FOR STEEL BEAM BRIDGES AND PRESTRESSED CONCRETE GIRDER BRIDGES, ADJUSTMENTS SHALL BE MADE DUE TO THE DEAD LOAD DEFLECTIONS FOR THE ELEVATIONS SHOWN. WHERE BLOCKS ARE SHOWN OVER BEAMS FOR BUILDING UP TO THE SLAB, THE VERTICAL DIMENSIONS OF THE BLOCKS SHALL BE ADJUSTED BETWEEN BEARINGS TO COMPENSATE FOR DEAD LOAD DEFLECTIONS, VERTICAL CURVE ORDINATE, AND ACTUAL BEAM CAMBER. WHERE BOTTOM OF SLAB IS IN LINE WITH BOTTOM OF TOP FLANGES, DEPTH OF SLAB BETWEEN BEARINGS SHALL BE ADJUSTED TO COMPENSATE FOR DEAD LOAD DEFLECTION, VERTICAL CURVE ORDINATE, AND ACTUAL BEAM CAMBER.

IN SETTING FALSEWORK AND FORMS FOR REINFORCED CONCRETE SPANS, AN ALLOWANCE SHALL BE MADE FOR DEAD LOAD DEFLECTIONS, SETTLEMENT OF FALSEWORK, AND PERMANENT CAMBER WHICH SHALL BE PROVIDED FOR IN ADDITION TO THE ELEVATIONS SHOWN. AFTER REMOVAL OF THE FALSEWORK, THE FINISHED STRUCTURES SHALL CONFORM TO THE PROFILE AND ELEVATIONS SHOWN ON THE PLANS AND CONSTRUCTION ELEVATIONS FURNISHED BY THE ENGINEER.

DETAILED DRAWINGS FOR FALSEWORK OR FORMS FOR BRIDGE SUPERSTRUCTURE AND ANY STRUCTURE OR PARTS OF A STRUCTURE AS NOTED ON THE PLANS SHALL BE SUBMITTED TO THE ENGINEER FOR APPROVAL BEFORE CONSTRUCTION OF THE FALSEWORK OR FORMS IS STARTED.

REINFORCING STEEL:

ALL REINFORCING STEEL SHALL BE DEFORMED. DIMENSIONS RELATIVE TO PLACEMENT OF REINFORCING ARE TO CENTERS OF BARS UNLESS OTHERWISE INDICATED IN THE PLANS. DIMENSIONS ON BAR DETAILS ARE TO CENTERS OF BARS OR ARE OUT TO OUT AS INDICATED ON PLANS.

WIRE BAR SUPPORTS SHALL BE PROVIDED FOR REINFORCING STEEL WHERE INDICATED ON THE PLANS. WHEN BAR SUPPORT PIECES ARE PLACED IN CONTINUOUS LINES, THEY SHALL BE SO PLACED THAT THE ENDS OF THE SUPPORTING WIRES SHALL BE LAPPED TO LOCK LEGS ON ADJOINING PIECES.

STRUCTURAL STEEL:

AT THE CONTRACTOR'S OPTION, HE MAY SUBSTITUTE ⅞" Ø SHEAR STUDS FOR THE ¾" Ø STUDS SPECIFIED ON THE PLANS. THIS SUBSTITUTION SHALL BE MADE AT THE RATE OF 3 - ⅞" Ø STUDS FOR 4 - ¾" Ø STUDS, AND STUD SPACING CHANGES SHALL BE MADE AS NECESSARY TO PROVIDE THE SAME EQUIVALENT NUMBER OF ⅞" Ø STUDS ALONG THE BEAM AS SHOWN FOR ¾" Ø STUDS BASED ON THE RATIO OF 3 - ⅞" Ø STUDS FOR 4 - ¾" Ø STUDS. STUDS OF THE LENGTH SPECIFIED ON THE PLANS MUST BE PROVIDED. THE MAXIMUM SPACING SHALL BE 2'-0".

EXCEPT AT THE INTERIOR SUPPORTS OF CONTINUOUS BEAMS WHERE THE COVER PLATE IS IN CONTACT WITH BEARING PLATE, THE CONTRACTOR MAY, AT HIS OPTION, SUBSTITUTE FOR THE COVER PLATES DESIGNATED ON THE PLANS COVER PLATES OF THE EQUIVALENT AREA PROVIDED THESE PLATES ARE AT LEAST 5/16" IN THICKNESS AND DO NOT EXCEED A WIDTH EQUAL TO THE FLANGE WIDTH LESS 2" OR A THICKNESS EQUAL TO 2 TIMES THE FLANGE THICKNESS. THE SIZE OF FILLET WELDS SHALL CONFORM TO THE REQUIREMENTS OF THE CURRENT ANSI/AASHTO/AWS "BRIDGE WELDING CODE". ELECTROSLAG WELDING WILL NOT BE PERMITTED.

WITH THE SOLE EXCEPTION OF EDGES AT SURFACES WHICH BEAR ON OTHER SURFACES, ALL SHARP EDGES AND ENDS OF SHAPES AND PLATES SHALL BE SLIGHTLY ROUNDED BY SUITABLE MEANS TO A RADIUS OF APPROXIMATELY 1/16 INCH OR EQUIVALENT FLAT SURFACE AT A SUITABLE ANGLE PRIOR TO PAINTING, GALVANIZING, OR METALLIZING.

HANDRAILS AND POSTS:

METAL STANDARDS AND FACES OF THE CONCRETE END POSTS FOR THE METAL RAIL SHALL BE SET NORMAL TO THE GRADE OF THE CURB, UNLESS OTHERWISE SHOWN ON PLANS. THE METAL RAIL AND TOPS OF CONCRETE POSTS USED WITH THE ALUMINUM RAIL SHALL BE BUILT PARALLEL TO THE GRADE OF THE CURB.

METAL HANDRAILS SHALL BE IN ACCORDANCE WITH THE PLANS. RAILS SHALL BE AS MANUFACTURED FOR BRIDGE RAILING. CASTINGS SHALL BE OF A UNIFORM APPEARANCE. FINS AND OTHER DEFORMATIONS RESULTING FROM CASTING OR OTHERWISE SHALL BE REMOVED IN A MANNER SO THAT A UNIFORM COLORING OF THE COMPLETED CASTING SHALL BE OBTAINED. CASTINGS WITH DISCOLORATIONS OR OF NON-UNIFORM COLORING WILL NOT BE ACCEPTED. CERTIFIED MILL REPORTS ARE REQUIRED FOR METAL RAILS AND POSTS.

SPECIAL NOTES:

GENERALLY, IN CASE OF DISCREPANCY, THIS STANDARD SHEET OF NOTES SHALL GOVERN OVER THE SPECIFICATIONS, BUT THE REMAINDER OF THE PLANS SHALL GOVERN OVER NOTES HEREON, AND SPECIAL PROVISIONS SHALL GOVERN OVER ALL. SEE SPECIFICATIONS ARTICLE 105-4.

ENGLISH

JANUARY, 1990