DocuSign Envelope ID: 1FC20EFE-39CF-4EAF-AC4F-2BAF0AB7C129

09/08/99

PROJECT: BP2.R019.1

CONTRACT: DB00533

See Sheet 1A For Index of Sheets
See Sheet 1B For Conventional Symbols

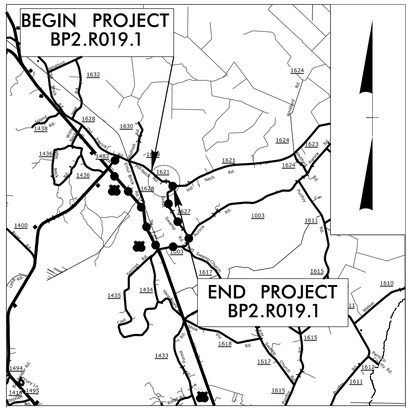

VICINITY MAP (NTS)
DETOUR ROUTE

STATE OF NORTH CAROLINA
DIVISION OF HIGHWAYS

CRAVEN COUNTY

STATE	STATE PROJECT REFERENCE NO.	SHEET NO.	TOTAL SHEETS
N.C.	BP2.R019.1	1	

STATE PROJ. NO.	F. A. PROJ. NO.	DESCRIPTION
BP2.R019.1	N/A	PE
BP2.R019.2	N/A	R/W, UTIL.
BP2.R019.3	N/A	CONST

LOCATION: *REPLACE BRIDGE NO. 240026 OVER BEAVER DAM SWAMP ON SR 1621 (HILLS NECK ROAD)*

TYPE OF WORK: *GRADING, DRAINAGE, PAVING AND STRUCTURE*

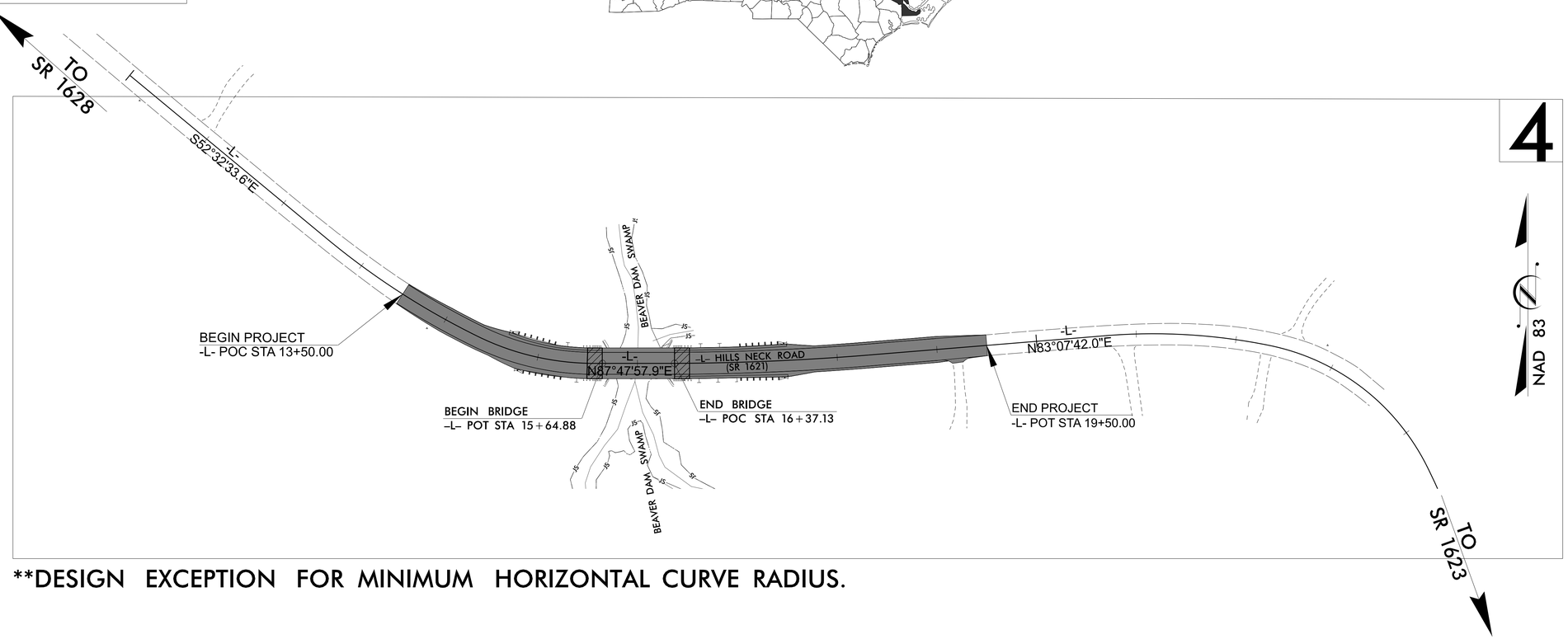

4

**DESIGN EXCEPTION FOR MINIMUM HORIZONTAL CURVE RADIUS.

DOCUMENT NOT CONSIDERED FINAL UNLESS ALL SIGNATURES COMPLETED

GRAPHIC SCALES

50 25 0 50 100
PLANS

50 25 0 50 100
PROFILE (HORIZONTAL)

10 5 0 10 20
PROFILE (VERTICAL)

DESIGN DATA

ADT 2022 = 860
ADT 2042 = 1550
K = N/A
D = N/A
T = 6 % *
V = 60 MPH
* TTST =N/A DUAL N/A
FUNC CLASS =
LOCAL
SUB-REGIONAL TIER

PROJECT LENGTH

PROJECT LENGTH FOR PROJECT BP2.R019.1

LENGTH ROADWAY	=	0.100 MILES
LENGTH STRUCTURE	=	0.014 MILES
TOTAL LENGTH	=	0.114 MILES

NCDOT CONTACT: MICHAEL AMAN, PE

PREPARED IN THE OFFICE OF:
CDM Smith
CDM Smith Inc.
5400 Glenwood Avenue
Suite 400
Raleigh, NC 27612-3228
NC COA No. F-1255

2018 STANDARD SPECIFICATIONS

RIGHT OF WAY DATE:
DECEMBER 03, 2021

LETTING DATE:
JULY 27, 2022

ADAM M. CONRAD, PE
PROJECT ENGINEER

TRUNG T. NGUYEN, PE
PROJECT DESIGN ENGINEER

HYDRAULICS ENGINEER

DocuSigned by:
Heather Hartenrider
2D70FCB172884 4D...
P.E.
SIGNATURE:

6/15/2022
NORTH CAROLINA
SEAL
035021
ENGINEER
HEATHER M. HARTENRIDER

ROADWAY DESIGN ENGINEER

DocuSigned by:
Adam M. Conrad
0DDC0FFA0FD94AD...
P.E.
SIGNATURE:

6/15/2022
NORTH CAROLINA
SEAL
043767
ENGINEER
ADAM M. CONRAD

STATE OF NORTH CAROLINA DEPARTMENT OF TRANSPORTATION

DocuSign Envelope ID: 368983B5-A399-4343-8E5C-2CC5C3A9B59A

5/26/20

INDEX OF SHEETS

SHEET NUMBER	SHEET
1	TITLE SHEET
1A	INDEX OF SHEETS, GENERAL NOTES, AND STANDARD DRAWINGS
1B	CONVENTIONAL SYMBOLS
2A-1 THRU 2A-2	PAVEMENT SCHEDULE AND TYPICAL SECTIONS
3B-1	ROADWAY SUMMARIES
3D-1	DRAINAGE SUMMARIES
3G-1	GEOTECHNICAL SUMMARIES
4	PLAN AND PROFILE SHEET
4A	ROW PLAN SHEET
RW-1 THRU RW-	SURVEY CONTROL, EXISTING CENTERLINES, RIGHT OF WAY, EASEMENT, AND PROPERTY TIES
TMP-1 THRU TMP-2	TRAFFIC MANAGEMENT PLANS
EC-1 THRU EC-5	EROSION CONTROL PLANS
RF-1	REFORESTATION PLANS
SIGN-1 THRU SIGN-3	SIGNING PLANS
UC-1 THRU UC-4	UTILITY CONSTRUCTION PLANS
UO-1 THRU UO-02	UTILITIES BY OTHERS PLANS
X-1 THRU X-6	CROSS-SECTIONS
S-1 THRU S-15	STRUCTURE PLANS

EFF. 01-16-2018
REV.
2018 ROADWAY ENGLISH STANDARD DRAWINGS

The following Roadway Standards as appear in "Roadway Standard Drawings" Highway Design Branch - N. C. Department of Transportation - Raleigh, N. C., Dated January, 2018 are applicable to this project and by reference hereby are considered a part of these plans:

STD.NO.	TITLE
DIVISION 2 - EARTHWORK	
200.02	Method of Clearing - Method II
225.02	Guide for Grading Subgrade - Secondary and Local
225.04	Method of Obtaining Superelevation - Two Lane Pavement
DIVISION 3 - PIPE CULVERTS	
300.01	Method of Pipe Installation
DIVISION 4 - MAJOR STRUCTURES	
422.02	Bridge Approach Fills - Type II Modiefied Approach Fill
DIVISION 5 - SUBGRADE, BASES AND SHOULDERS	
560.01	Method of Shoulder Construction - High Side of Superelevated Curve - Method I
DIVISION 8 - INCIDENTALS	
815.02	Subsurface Drain
840.00	Concrete Base Pad for Drainage Structures
840.20	Frames and Wide Slot Flat Grates
840.25	Anchorage for Frames - Brick or Concrete or Precast
840.35	Traffic Bearing Grated Drop Inlet - for Cast Iron Double Frame and Grates
840.46	Traffic Bearing Precast Drainage Structure
840.66	Drainage Structure Steps
846.01	Concrete Curb, Gutter and Curb & Gutter
846.04	Drop Inlet Installation in Shoulder Berm Gutter
862.01	Guardrail Placement
862.02	Guardrail Installation
862.03	Structure Anchor Units
876.02	Guide for Rip Rap at Pipe Outlets

GENERAL NOTES: 2018 SPECIFICATIONS
EFFECTIVE: 01-16-2018
REVISED:

GRADING AND SURFACING OR RESURFACING AND WIDENING:

THE GRADE LINES SHOWN DENOTE THE FINISHED ELEVATION OF THE PROPOSED SURFACING AT GRADE POINTS SHOWN ON THE TYPICAL SECTIONS. WHERE NO GRADE LINES ARE SHOWN, THE PROFILES SHOWN DENOTE THE TOP ELEVATION OF THE EXISTING PAVEMENT ALONG THE CENTER LINE OF SURVEY ON WHICH THE PROPOSED RESURFACING WILL BE PLACED. GRADE LINES MAY BE ADJUSTED BY THE ENGINEER IN ORDER TO SECURE A PROPER TIE-IN.

CLEARING:

CLEARING ON THIS PROJECT SHALL BE PERFORMED TO THE LIMITS ESTABLISHED BY METHOD II.

SUPERELEVATION:

ALL CURVES ON THIS PROJECT SHALL BE SUPERELEVATED IN ACCORDANCE WITH STD. NO. 225.04 USING THE RATE OF SUPERELEVATION AND RUNOFF SHOWN ON THE PLANS. SUPERELEVATION IS TO BE REVOLVED ABOUT THE GRADE POINTS SHOWN ON THE TYPICAL SECTIONS.

SHOULDER CONSTRUCTION:

ASPHALT, EARTH, AND CONCRETE SHOULDER CONSTRUCTION ON THE HIGH SIDE OF SUPERELEVATED CURVES SHALL BE IN ACCORDANCE WITH STD. NO. 560.01

SIDE ROADS:

THE CONTRACTOR WILL BE REQUIRED TO DO ALL NECESSARY WORK TO PROVIDE SUITABLE CONNECTIONS WITH ALL ROADS, STREETS, AND DRIVES ENTERING THIS PROJECT. THIS WORK WILL BE PAID FOR AT THE CONTRACT UNIT PRICE FOR THE PARTICULAR ITEMS INVOLVED.

SUBSURFACE DRAINS:

SUBSURFACE DRAINS SHALL BE CONSTRUCTED IN ACCORDANCE WITH STD. NO. 815.02 AT LOCATIONS DIRECTED BY THE ENGINEER.

GUARDRAIL:

THE GUARDRAIL LOCATIONS SHOWN ON THE PLANS MAY BE ADJUSTED DURING CONSTRUCTION AS DIRECTED BY THE ENGINEER. THE CONTRACTOR SHOULD CONSULT WITH THE ENGINEER PRIOR TO ORDERING GUARDRAIL MATERIAL.

END BENTS:

THE ENGINEER SHALL CHECK THE STRUCTURE END BENT PLANS, DETAILS, AND CROSS-SECTION PRIOR TO SETTING OF THE SLOPE STAKES FOR THE EMBANKMENT OR EXCAVATION APPROACHING A BRIDGE.

UTILITIES:

UTILITY OWNERS ON THIS PROJECT ARE TIDELAND E.M.C.,

CRAVEN COUNTY WATER, DUKE - DISTRIBUTION, SPECTRUM, SUDDENLINK,

AND CENTURYLINK/LUMEN.

ANY RELOCATION OF EXISTING UTILITIES WILL BE ACCOMPLISHED BY OTHERS, EXCEPT AS SHOWN ON THE PLANS.

RIGHT-OF-WAY MARKERS:

ALL RIGHT-OF-WAY MARKERS ON THIS PROJECT SHALL BE PLACED BY OTHERS.

BP2.R019.1
4RD1 1A

ROADWAY DESIGN ENGINEER
NORTH CAROLINA PROFESSIONAL SEAL 043767 ENGINEER
1/24/2022
DocuSigned by:
ODDCCFF4F0C0400...
CONRAD

DOCUMENT NOT CONSIDERED FINAL UNLESS ALL SIGNATURES COMPLETED

STATE OF NORTH CAROLINA

ROADWAY DESIGN UNIT

PREPARED BY

CDM Smith
CDM Smith Inc
5400 Glenwood Avenue
Suite 400
Raleigh, NC 27612-3228
NC COA No. F-1255

REVISIONS

STATE OF NORTH CAROLINA, DIVISION OF HIGHWAYS

CONVENTIONAL PLAN SHEET SYMBOLS

Note: Not to Scale

BOUNDARIES AND PROPERTY:

- State Line
- County Line
- Township Line
- City Line
- Reservation Line
- Property Line
- Existing Iron Pin (EIP)
- Computed Property Corner
- Existing Concrete Monument (ECM)
- Parcel/Sequence Number
- Existing Fence Line
- Proposed Woven Wire Fence
- Proposed Chain Link Fence
- Proposed Barbed Wire Fence
- Existing Wetland Boundary
- Proposed Wetland Boundary
- Existing Endangered Animal Boundary
- Existing Endangered Plant Boundary
- Existing Historic Property Boundary
- Known Contamination Area: Soil
- Potential Contamination Area: Soil
- Known Contamination Area: Water
- Potential Contamination Area: Water
- Contaminated Site: Known or Potential

BUILDINGS AND OTHER CULTURE:

- Gas Pump Vent or U/G Tank Cap
- Sign
- Well
- Small Mine
- Foundation
- Area Outline
- Cemetery
- Building
- School
- Church
- Dam

HYDROLOGY:

- Stream or Body of Water
- Hydro, Pool or Reservoir
- Jurisdictional Stream
- Buffer Zone 1
- Buffer Zone 2
- Flow Arrow
- Disappearing Stream
- Spring
- Wetland
- Proposed Lateral, Tail, Head Ditch
- False Sump

RAILROADS:

- Standard Gauge
- RR Signal Milepost
- Switch
- RR Abandoned
- RR Dismantled

RIGHT OF WAY & PROJECT CONTROL:

- Primary Horiz Control Point
- Primary Horiz and Vert Control Point
- Secondary Horiz and Vert Control Point
- Vertical Benchmark
- Existing Right of Way Monument
- Proposed Right of Way Monument (Rebar and Cap)
- Proposed Right of Way Monument (Concrete)
- Existing Permanent Easement Monument
- Proposed Permanent Easement Monument (Rebar and Cap)
- Existing C/A Monument
- Proposed C/A Monument (Rebar and Cap)
- Proposed C/A Monument (Concrete)
- Existing Right of Way Line
- Proposed Right of Way Line
- Existing Control of Access Line
- Proposed Control of Access Line
- Proposed ROW and CA Line
- Existing Easement Line
- Proposed Temporary Construction Easement
- Proposed Temporary Drainage Easement
- Proposed Permanent Drainage Easement
- Proposed Permanent Drainage/Utility Easement
- Proposed Permanent Utility Easement
- Proposed Temporary Utility Easement
- Proposed Aerial Utility Easement

ROADS AND RELATED FEATURES:

- Existing Edge of Pavement
- Existing Curb
- Proposed Slope Stakes Cut
- Proposed Slope Stakes Fill
- Proposed Curb Ramp
- Existing Metal Guardrail
- Proposed Guardrail
- Existing Cable Guiderail
- Proposed Cable Guiderail
- Equality Symbol
- Pavement Removal

VEGETATION:

- Single Tree
- Single Shrub
- Hedge
- Woods Line
- Orchard
- Vineyard

EXISTING STRUCTURES:

MAJOR:

- Bridge, Tunnel or Box Culvert
- Bridge Wing Wall, Head Wall and End Wall

MINOR:

- Head and End Wall
- Pipe Culvert
- Footbridge
- Drainage Box: Catch Basin, DI or JB
- Paved Ditch Gutter
- Storm Sewer Manhole
- Storm Sewer

UTILITIES:

** SUE – Subsurface Utility Engineering*
LOS – Level of Service – A,B,C or D (Accuracy)

POWER:

- Existing Power Pole
- Proposed Power Pole
- Existing Joint Use Pole
- Proposed Joint Use Pole
- Power Manhole
- Power Line Tower
- Power Transformer
- U/G Power Cable Hand Hole
- H–Frame Pole
- U/G Power Line Test Hole (SUE – LOS A)*
- U/G Power Line (SUE – LOS B)*
- U/G Power Line (SUE – LOS C)*
- U/G Power Line (SUE – LOS D)*

TELEPHONE:

- Existing Telephone Pole
- Proposed Telephone Pole
- Telephone Manhole
- Telephone Pedestal
- Telephone Cell Tower
- U/G Telephone Cable Hand Hole
- U/G Telephone Test Hole (SUE – LOS A)*
- U/G Telephone Cable (SUE – LOS B)*
- U/G Telephone Cable (SUE – LOS C)*
- U/G Telephone Cable (SUE – LOS D)*
- U/G Telephone Conduit (SUE – LOS B)*
- U/G Telephone Conduit (SUE – LOS C)*
- U/G Telephone Conduit (SUE – LOS D)*
- U/G Fiber Optics Cable (SUE – LOS B)*
- U/G Fiber Optics Cable (SUE – LOS C)*
- U/G Fiber Optics Cable (SUE – LOS D)*

WATER:

- Water Manhole
- Water Meter
- Water Valve
- Water Hydrant
- U/G Water Line Test Hole (SUE – LOS A)*
- U/G Water Line (SUE – LOS B)*
- U/G Water Line (SUE – LOS C)*
- U/G Water Line (SUE – LOS D)*
- Above Ground Water Line

TV:

- TV Pedestal
- TV Tower
- U/G TV Cable Hand Hole
- U/G TV Test Hole (SUE – LOS A)*
- U/G TV Cable (SUE – LOS B)*
- U/G TV Cable (SUE – LOS C)*
- U/G TV Cable (SUE – LOS D)*
- U/G Fiber Optic Cable (SUE – LOS B)*
- U/G Fiber Optic Cable (SUE – LOS C)*
- U/G Fiber Optic Cable (SUE – LOS D)*

GAS:

- Gas Valve
- Gas Meter
- U/G Gas Line Test Hole (SUE – LOS A)*
- U/G Gas Line (SUE – LOS B)*
- U/G Gas Line (SUE – LOS C)*
- U/G Gas Line (SUE – LOS D)*
- Above Ground Gas Line

SANITARY SEWER:

- Sanitary Sewer Manhole
- Sanitary Sewer Cleanout
- U/G Sanitary Sewer Line
- Above Ground Sanitary Sewer
- SS Force Main Line Test Hole (SUE – LOS A)*
- SS Force Main Line (SUE – LOS B)*
- SS Force Main Line (SUE – LOS C)*
- SS Force Main Line (SUE – LOS D)*

MISCELLANEOUS:

- Utility Pole
- Utility Pole with Base
- Utility Located Object
- Utility Traffic Signal Box
- Utility Unknown U/G Line (SUE – LOS B)*
- U/G Tank; Water, Gas, Oil
- Underground Storage Tank, Approx. Loc.
- A/G Tank; Water, Gas, Oil
- Geoenvironmental Boring
- Abandoned According to Utility Records — AATUR
- End of Information — E.O.I.

DocuSign Envelope ID: 368983B5-A399-4343-8E5C-2CC5C3A9B59A

5/26/20

PAVEMENT SCHEDULE

(FINAL PAVEMENT DESIGN)

C1	PROP. APPROX. 1.5″ ASPHALT CONCRETE SURFACE COURSE, TYPE S9.5B, AT AN AVERAGE RATE OF 165 LBS. PER SQ. YD.
C2	PROP. APPROX. 3″ ASPHALT CONCRETE SURFACE COURSE, TYPE S9.5B, AT AN AVERAGE RATE OF 165 LBS. PER SQ. YD. IN EACH OF THE TWO LAYERS.
C3	PROP. VAR. DEPTH ASPHALT CONCRETE SURFACE COURSE, TYPE S9.5B, AT AN AVERAGE RATE OF 110 LBS. PER SQ. YD. PER 1″ DEPTH. TO BE PLACED IN LAYERS NOT TO EXCEED 1.5″ IN DEPTH.
E1	PROP. APPROX. 4″ ASPHALT CONCRETE BASE COURSE, TYPE B25.0C, AT AN AVERAGE RATE OF 456 LBS. PER SQ. YD.
E2	PROP. VAR. DEPTH ASPHALT CONCRETE BASE COURSE, TYPE B25.0C, AT AN AVERAGE RATE OF 114 LBS. PER SQ. YD. PER 1″ DEPTH. TO BE PLACED IN LAYERS NOT LESS THAN 3″ IN DEPTH OR GREATER THAN 5.5″ IN DEPTH.
J	PROP. 8″ AGGREGATE BASE COURSE.
R	SHOULDER BERM GUTTER.
T	EARTH MATERIAL.
U	EXISTING PAVEMENT.
V	INCIDENTAL MILLING.
W	VARIABLE DEPTH ASPHALT PAVEMENT (SEE -L- WEDGING DETAIL)

NOTE: ALL PAVEMENT EDGE SLOPES ARE 1:1 UNLESS SHOWN OTHERWISE.

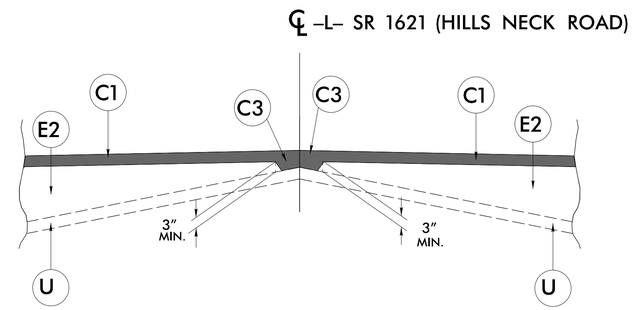

Detail Showing Method of Wedging – W

MILLING DETAIL
INCIDENTAL MILLING AT BEGIN/END FOR TIE–INS

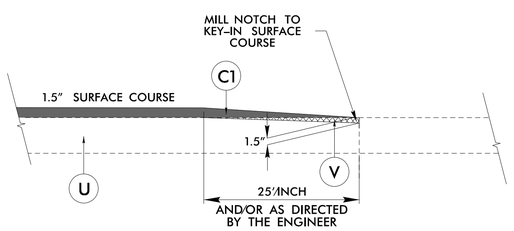

–L– STA. 13+50.00 TO STA. 13+87.50
–L– STA. 19+12.50 TO STA. 19+50.00

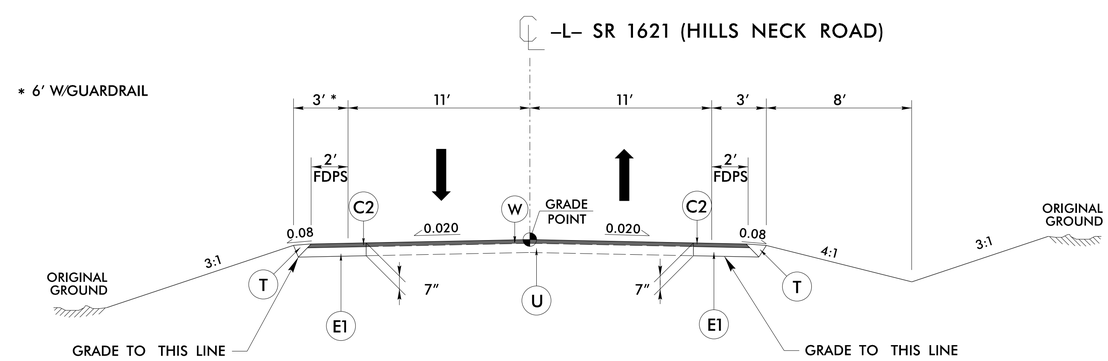

TYPICAL SECTION NO. 1

USE TYPICAL SECTION NO. 1

–L– STA. 13+50.00 TO STA. 14+65.00
–L– STA. 17+35.00 TO STA. 19+50.00

BP2.R019.1

4RD1	2A-1

ROADWAY DESIGN ENGINEER

NORTH CAROLINA PROFESSIONAL SEAL 043767 ENGINEER

3/24/2022

DocuSigned by:
Adam M. Conrad
DDDC9F8A9FD04A0...

PAVEMENT DESIGN ENGINEER

DOCUMENT NOT CONSIDERED FINAL UNLESS ALL SIGNATURES COMPLETED

STATE OF NORTH CAROLINA

ROADWAY DESIGN UNIT

PREPARED BY

CDM Smith

CDM Smith Inc.
4600 Park Road
Suite 240
Charlotte, NC 28209
NC COA No. F-1255

DocuSign Envelope ID: 368983B5-A399-4343-8E5C-2CC5C3A9B59A

5/26/20

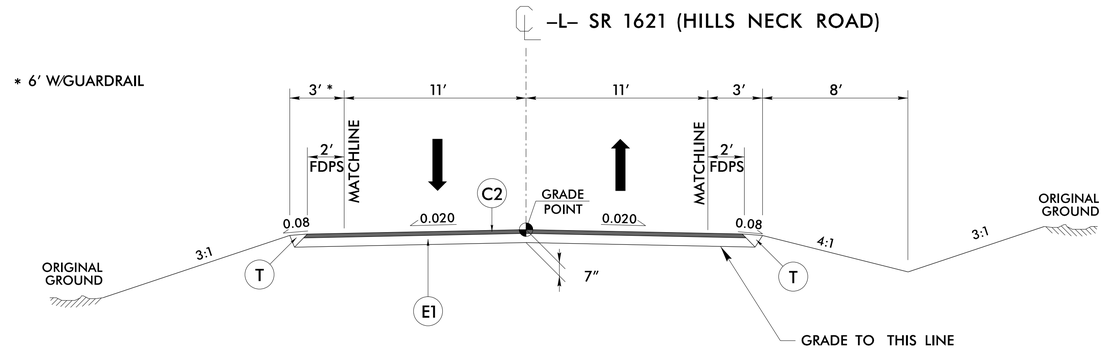

TYPICAL SECTION NO. 2

USE TYPICAL SECTION NO. 2

–L– STA. 14+65.00 TO BEGIN BRIDGE
END BRIDGE TO STA. 17+35.00

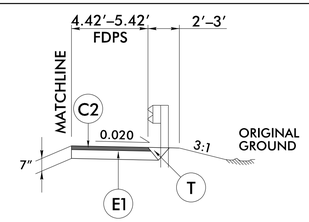

DETAIL A

USE DETAIL A IN CONJUNCTION
WITH TYPICAL SECTION NO. 2

–L– STA. 14+65.00 TO BEGIN BRIDGE (LT)
–L– STA. 14+80.00 TO BEGIN BRIDGE (RT)
–L– STA. END BRIDGE TO STA. 17+50.00 (LT/RT)

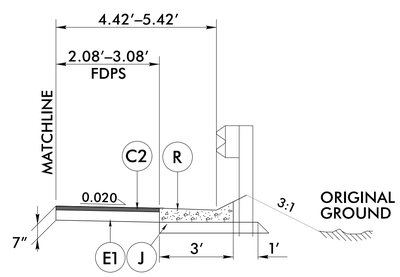

DETAIL B

USE DETAIL A IN CONJUNCTION
WITH TYPICAL SECTION NO. 2

–L– STA. 14+65.00 TO BEGIN BRIDGE (LT)
–L– STA. END BRIDGE TO STA. 17+50.00 (LT/RT)

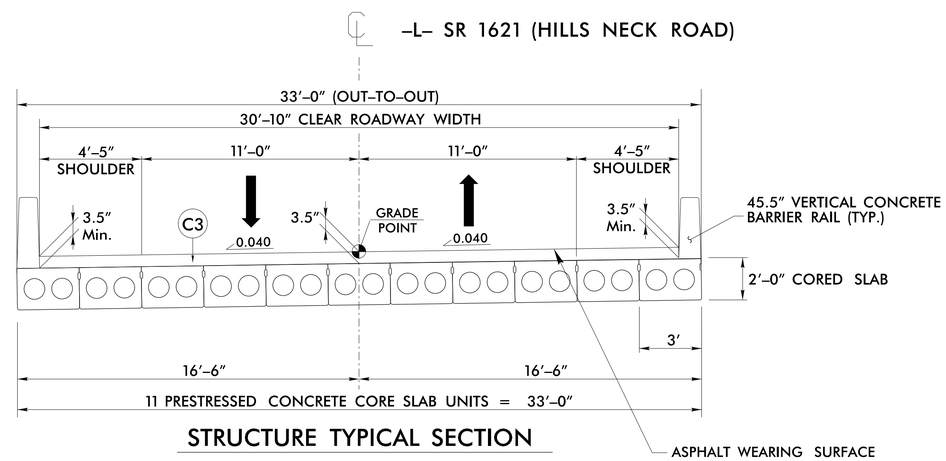

STRUCTURE TYPICAL SECTION

PAVEMENT SCHEDULE (FINAL PAVEMENT DESIGN)	
C1	1.5″ S9.5B
C2	3″ S9.5B
C3	VAR. S9.5B
E1	4″ B25.0C
E2	VAR. B25.0C
J	8″ ABC
R	SBG
T	EARTH MATERIAL
U	EXIST. PAVEMENT
V	INCIDENTAL MILLING
W	WEDGING
PAVEMENT EDGESLOPES 1:1 UNLESS NOTED OTHERWISE	

BP2.R019.1

4RD1	2A-2

ROADWAY DESIGN ENGINEER

NORTH CAROLINA PROFESSIONAL ENGINEER SEAL 043767

3/24/2022

DocuSigned by: Adam M. Cammack
DDDC0F1A6FF0448...

PAVEMENT DESIGN ENGINEER

DOCUMENT NOT CONSIDERED FINAL UNLESS ALL SIGNATURES COMPLETED

STATE OF NORTH CAROLINA

ROADWAY DESIGN UNIT

PREPARED BY

CDM Smith

CDM Smith Inc.
4600 Park Road
Suite 240
Charlotte, NC 28209
NC COA No. F-1255

STATE OF NORTH CAROLINA
DIVISION OF HIGHWAYS

"N" = DISTANCE FROM EDGE OF LANE TO FACE OF GUARDRAIL.
TOTAL SHOULDER WIDTH = DISTANCE FROM EDGE OF TRAVEL LANE TO SHOULDER BREAK POINT.
FLARE LENGTH = DISTANCE FROM LAST SECTION OF PARALLEL GUARDRAIL TO END OF GUARDRAIL.
W = TOTAL WIDTH OF FLARE FROM BEGINNING OF TAPER TO END OF GUARDRAIL.
G = GATING IMPACT ATTENUATOR TYPE 350
NG = NON-GATING IMPACT ATTENUATOR TYPE 350

GUARDRAIL SUMMARY

SURVEY LINE	BEG. STA.	END STA.	LOCATION	LENGTH			WARRANT POINT		"N" DIST. FROM E.O.L.	TOTAL SHOUL. WIDTH	FLARE LENGTH		W		ANCHORS									IMPACT ATTENUATOR TYPE 350			SINGLE FACED GUARDRAIL	REMOVE EXISTING GUARDRAIL	REMOVE AND STOCKPILE EXISTING GUARDRAIL	REMARKS
				STRAIGHT	SHOP CURVED	DOUBLE FACED	APPROACH END	TRAILING END			APPROACH END	TRAILING END	APPROACH END	TRAILING END	GREU TL-3	TYPE III								EA	G	NG				
-L-	14+65±	15+65±	LT	100.00				15+65±	4.42	7.42		50.00		1.00	1	1														
-L-	14+80±	15+65±	RT	87.50			15+65±		4.42	7.42	50.00		1.00		1	1														
-L-	16+37±	17+50±	LT	112.50			16+37±		4.42	7.42	50.00		1.00		1	1														
-L-	16+37±	17+50±	RT	112.50				16+37±	4.42	7.42		50.00		1.00	1	1														
			SUBTOTALS	412.50											4	4														
			TYPE III, 4@18.75'	-75.00																										
			GREU TL-3, 4@50.00'	-200.00																										
			PROJECT TOTALS	137.50											4	4														
			SAY	137.50											4	4														
ADDITIONAL GUARDRAIL POSTS = 10 EA																														

SUMMARY OF EARTHWORK (CY)

LOCATION	UNCLASSIFIED EXCAVATION	UNDERCUT	EMBT+%	BORROW	WASTE
-L- 13+50.00 - BEGIN BRIDGE	101		1,226	1,124	
END BRIDGE - 19+50.00	279		5,291	5,011	
SUBTOTAL	380		6,517	6,135	
PROJECT TOTAL	380		6,517	6,135	
EST. 5% TO REPLACE TOP SOIL ON BORROW PIT				307	
GRAND TOTAL	380		6,517	6,442	
SAY	400			6,500	

UNDERCUT (CONTINGENCY) = 300 CY
SELECT GRANULAR MATERIAL (CONTINGENCY) = 300 CY

NOTE: Earthwork quantities are calculated by the Roadway Design Unit. These earthwork quantities are based in part on subsurface data provided by the Geotechnical Engineering Unit.

Note: Approximate quantities only. Unclassified Excavation, Borrow Excavation, Fine Grading, Clearing and Grubbing, and Removal of Existing Pavement will be paid for at the contract lump sum price for "Grading."

SUMMARY OF PAVEMENT REMOVAL (SY)

LINE	STATION - STATION	LOCATION	REMOVAL (SY)
-L-	STA. 14+65.00 TO STA. 15+70.36	CL	281
-L-	STA. 16+31.31 TO STA. 17+35.00	CL	270
GRAND TOTAL			551
SAY			560

SUMMARY OF SHOULDER BERM GUTTER (LF)

LINE	STATION	STATION	LENGTH (LF)
-L- LT	14+65+/-	15+65+/-	100
-L- LT	16+37+/-	17+50+/-	112.50
-L- RT	16+37+/-	17+50+/-	112.50
		TOTAL	325
		SAY	330

DI-3CPL6C3

COMPUTED BY:	Prabhash Joshi	DATE:	10/22/2021
CHECKED BY:	Shirshant Sharma	DATE:	10/22/2021

PROJECT NO.	SHEET NO.
BP2.R019.1	3D-1

NORTH CAROLINA DEPARTMENT OF TRANSPORTATION
DIVISION OF HIGHWAYS

**Note: Invert Elevations indicated are for Bid Purposes only and shall not be used for project construction stakeout.
See "Standard Specifications For Roads and Structures, Section 300-5".**

LIST OF PIPES, ENDWALLS, ETC. (FOR PIPES 48 INCHES & UNDER)

LINE & STATION / SIZE / THICKNESS OR GAUGE	OFFSET		STRUCTURE NUMBER FROM	STRUCTURE NUMBER TO	TOP ELEVATION FT.	INVERT ELEVATION FT.	INVERT ELEVATION FT.	MINIMUM REQUIRED SLOPE %	Side Drain Pipe (RCP, CSP, CAAP, HDPE, or PVC) 12	15	18	24	30	36	42	48	54	60	66	72	78	84
15+19.90	13	LT	404	405	10.0	5.8	4.9			28												
16+98.00	13	LT	401	402	9.4	6.1	4.8															
16+98.00	13	RT	402	403	10.3	4.8	2.9			28												
SHEET TOTALS										56												
PROJECT TOTALS										56												

LINE & STATION	R. C. PIPE CLASS III 12	15	18	24	30	36	42	48	54	60	66	72	78	84	R. C. PIPE CLASS IV 12	15	18	24	30	36	42	48	54	60	66	72	78	84
15+19.90																												
16+98.00																28												
16+98.00																												
SHEET TOTALS																28												
PROJECT TOTALS																28												

LINE & STATION	DRAINAGE STRUCTURE MASONRY CY	QUANTITIES FOR DRAINAGE STRUCTURES (NOTE: TOTAL LIN. FT. FOR PAY QUANTITY SHALL BE A + (1.3 X B)) 0' THRU 5' EACH	A 5' THRU 10' LIN. FT.	B 10' AND ABOVE LIN. FT.	C.B. STD. 840.01 OR STD. 840.02	FRAME, GRATES, AND HOOD STD. 840.03 GRATE TYPE E	F	G	CONCRETE TRANSITIONAL SECTION D.I. STD. 852.04 OR STD. 852.06	C.B. STD. 852.05
15+19.90		1								
16+98.00		1								
16+98.00		5	0.5							
SHEET TOTALS		7	0.5							
PROJECT TOTALS		7	0.5							

LINE & STATION	OPEN THROAT C.B. STD. 840.04 OR STD. 840.05	CONCRETE BRIDGE APPROACH D.I. STD. 840.13	D.I. STD. 840.14 OR STD. 840.15	D.I. FRAME AND GRATES STD. 840.16	G.D.I. TYPE "A" STD. 840.17 OR STD. 840.26	G.D.I. TYPE "B" STD. 840.18 OR STD. 840.27	G.D.I. TYPE "D" STD. 840.19 OR STD. 840.28	G.D.I. (W.S. FLAT) FRAME WITH GRATE STD. 840.20	G.D.I. (W.S. FLAT) FRAME W/ 2 GRATES STD. 840.20	G.D.I. (W.S. SAG) FRAME W/ GRATE STD. 840.22	G.D.I. (W.S. SAG) FRAME W/ 2 GRATES STD. 840.22	G.D.I. (N.S. SAG) FRAME W/ GRATE STD. 840.24	G.D.I. (N.S. SAG) FRAME W/ 2 GRATES STD. 840.24	G.D.I. (N.S. FLAT) FRAME W/ GRATE STD. 840.29	G.D.I. (N.S. FLAT) FRAME W/ 2 GRATES STD. 840.29	DRIVEWAY D.I. STD. 840.30	FRAME W/ GRATE FOR DRIVEWAY STD. 840.30	J.B. STD. 840.31 OR STD. 840.32	ANGLED VANE GRATES AND FRAMES STD. 840.33	T.B.J.B. STD. 840.34	T.B.D.I. STD. 840.35	T.B.D.I. FOR STEEL GRATES STD. 840.36	STEEL FRAME WITH TWO GRATES STD. 840.37	TEMP STEEL PLATE COVER MASONRY DRAINAGE	PIPE REMOVAL LIN. FT.	REMARKS
15+19.90									1												1					
16+98.00									1												1					
16+98.00									1												1					
SHEET TOTALS									3												3					
PROJECT TOTALS									3												3					

ABBREVIATIONS

C.A.A.	CORRUGATED ALUMINIUM ALLOY
C.B.	CATCH BASIN
C.S.	CORRUGATED STEEL
D.I.	DROP INLET
G.D.I.	GRATED DROP INLET
H.D.P.E.	HIGH DENSITY POLYETHYLENE
J.B.	JUNCTION BOX
M.H.	MANHOLE
N.S.	NARROW SLOT
P.V.C.	POLYVINYL CHLORIDE
R.C.	REINFORCED CONCRETE
T.B.D.I.	TRAFFIC BEARING DROP INLET
T.B.J.B.	TRAFFIC BEARING JUNCTION BOX
W.S.	WIDE SLOT

COMPUTED BY: Tyler C. Bottoms DATE: 10/7/21
CHECKED BY: Thein Tun Zan DATE: 10/14/21

(5-15-18)

PROJECT NO.	SHEET NO.
BP2.R019.1	3G-1

STATE OF NORTH CAROLINA
DIVISION OF HIGHWAYS

SUMMARY OF SUBSURFACE DRAINAGE

LINE	Station	Station	Location LT/RT/CL	Drain Type* UD/BD/SD	LF
CONTINGENCY				SD	200
				TOTAL LF:	200

*UD = Underdrain
*BD = Blind Drain
*SD = Subsurface Drain

DocuSign Envelope ID: 368983B5-A399-4343-8E5C-2CC5C3A9B59A

5/26/20

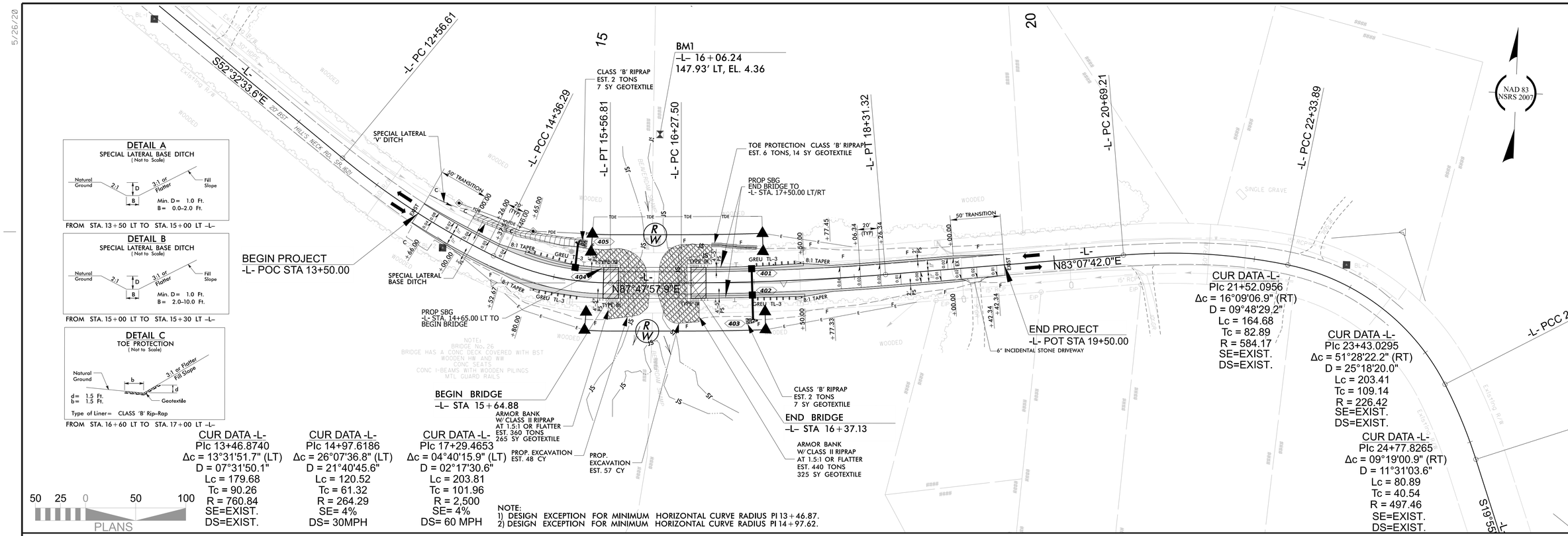

NOTE:
1) DESIGN EXCEPTION FOR MINIMUM HORIZONTAL CURVE RADIUS PI 13+46.87.
2) DESIGN EXCEPTION FOR MINIMUM HORIZONTAL CURVE RADIUS PI 14+97.62.

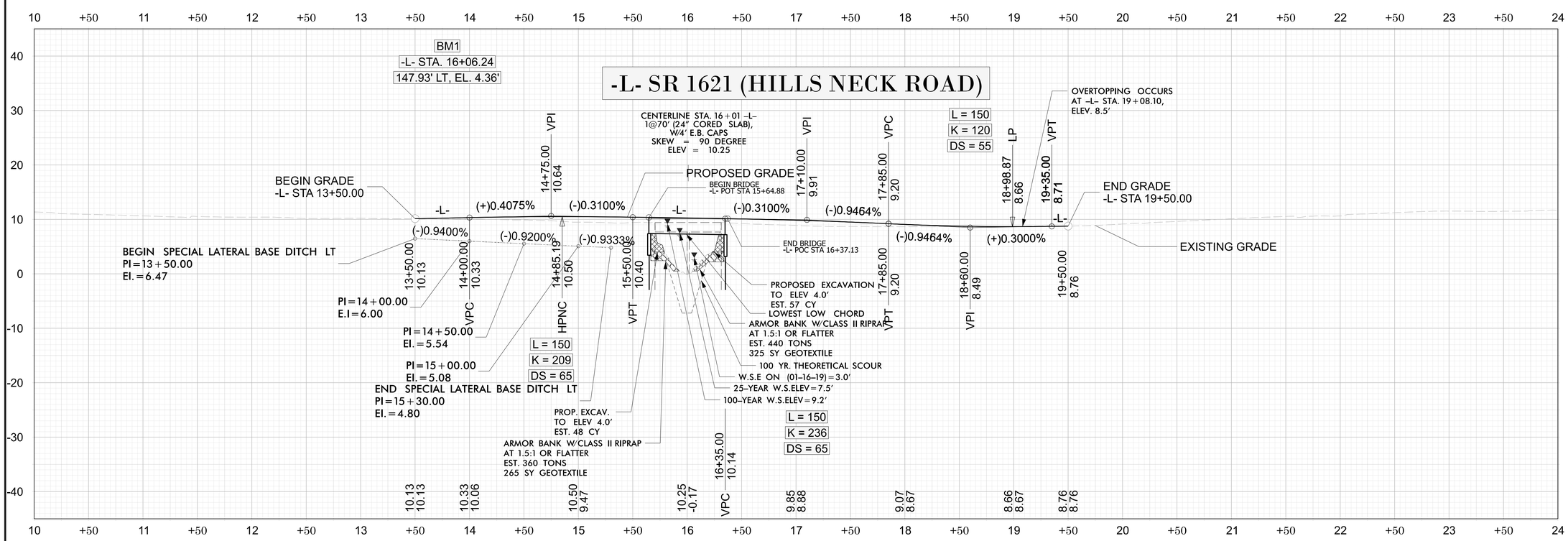

BP2.R019.1

4RD1	4

ROADWAY DESIGN ENGINEER
NORTH CAROLINA PROFESSIONAL SEAL 043767 ENGINEER
3/24/2022
DocuSigned by: Adam M. Conrad
DDDC6FF7AF0D4AD...

HYDRAULICS ENGINEER
NORTH CAROLINA PROFESSIONAL SEAL 035021 ENGINEER
3/23/2022
DocuSigned by: Heather Harkenrider
2D7F9D97728A4D...

DOCUMENT NOT CONSIDERED FINAL UNLESS ALL SIGNATURES COMPLETED

STATE OF NORTH CAROLINA

ROADWAY DESIGN UNIT

PREPARED BY

CDM Smith
CDM Smith Inc.
5400 Glenwood Avenue
Suite 400
Raleigh, NC 27612-2228
NC CDA No. F-1255

REVISIONS

DocuSign Envelope ID: 368983B5-A399-4343-8E5C-2CC5C3A9B59A

5/26/20

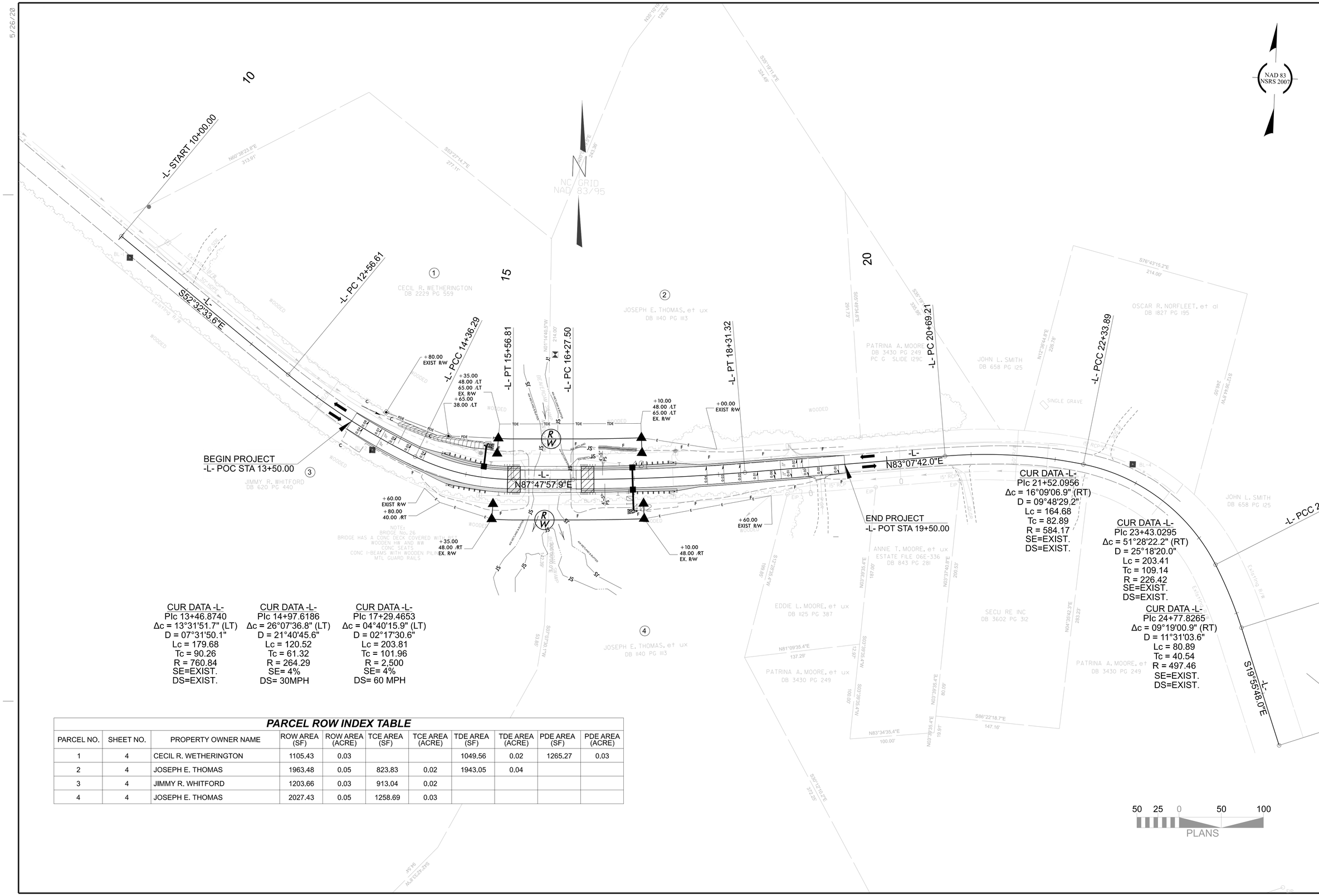

CUR DATA -L-
PIc 13+46.8740
Δc = 13°31'51.7" (LT)
D = 07°31'50.1"
Lc = 179.68
Tc = 90.26
R = 760.84
SE=EXIST.
DS=EXIST.

CUR DATA -L-
PIc 14+97.6186
Δc = 26°07'36.8" (LT)
D = 21°40'45.6"
Lc = 120.52
Tc = 61.32
R = 264.29
SE= 4%
DS= 30MPH

CUR DATA -L-
PIc 17+29.4653
Δc = 04°40'15.9" (LT)
D = 02°17'30.6"
Lc = 203.81
Tc = 101.96
R = 2,500
SE= 4%
DS= 60 MPH

PARCEL ROW INDEX TABLE

PARCEL NO.	SHEET NO.	PROPERTY OWNER NAME	ROW AREA (SF)	ROW AREA (ACRE)	TCE AREA (SF)	TCE AREA (ACRE)	TDE AREA (SF)	TDE AREA (ACRE)	PDE AREA (SF)	PDE AREA (ACRE)
1	4	CECIL R. WETHERINGTON	1105.43	0.03			1049.56	0.02	1265.27	0.03
2	4	JOSEPH E. THOMAS	1963.48	0.05	823.83	0.02	1943.05	0.04		
3	4	JIMMY R. WHITFORD	1203.66	0.03	913.04	0.02				
4	4	JOSEPH E. THOMAS	2027.43	0.05	1258.69	0.03				

BP2.R019.1

3RD1 | 4A

ROADWAY DESIGN ENGINEER

NORTH CAROLINA PROFESSIONAL SEAL 043767 ENGINEER

3/24/2022

DocuSigned by:
DOCUSIGNED

HYDRAULICS ENGINEER

DOCUMENT NOT CONSIDERED FINAL UNLESS ALL SIGNATURES COMPLETED

STATE OF NORTH CAROLINA

ROADWAY DESIGN UNIT

PREPARED BY

CDM Smith

CDM Smith Inc.
5400 Glenwood Avenue
Suite 400
Raleigh, NC 27612-2228
NC CDA No. F-1255

REVISIONS

DocuSign Envelope ID: DF2EA84B-9AAC-40F1-9F66-6D617B10F14A

02/25/2022

PROJECT: BP2.R019.1

STATE OF NORTH CAROLINA
DIVISION OF HIGHWAYS

STATE	STATE PROJECT REFERENCE NO.	SHEET NO.	TOTAL SHEETS
N.C.	BP2.R019.1	RW01	

SURVEY CONTROL, EXISTING CENTERLINES, RIGHT OF WAY, EASEMENTS AND PROPERTY TIES

CRAVEN COUNTY

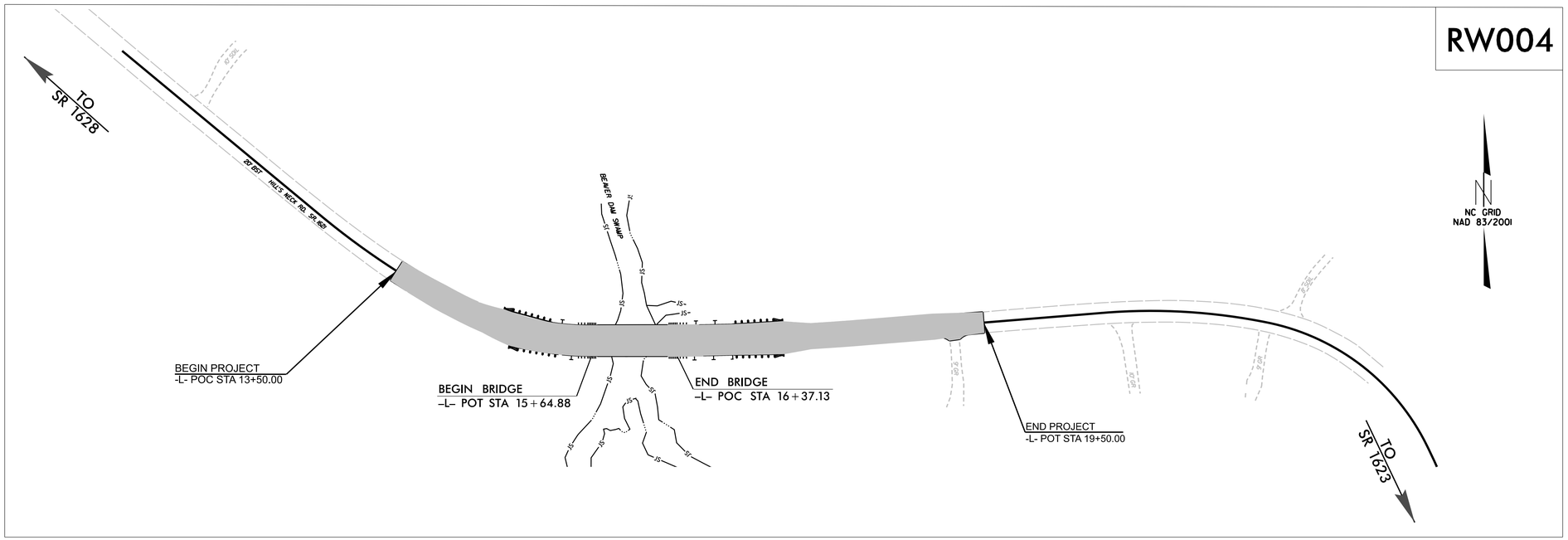

DOCUMENT NOT CONSIDERED FINAL
UNLESS ALL SIGNATURES COMPLETED

GRAPHIC SCALES

50 25 0 50 100

PLAN 1"=50'

DATUM DESCRIPTION

THE LOCALIZED COORDINATE SYSTEM DEVELOPED FOR THIS PROJECT
IS BASED ON THE STATE PLANE COORDINATES ESTABLISHED BY
NCDOT FOR MONUMENT "GPS1"
WITH NAD 83/NSRS 2011 STATE PLANE GRID COORDINATES OF
NORTHING: 550455.702(ft) EASTING: 2576882.238(ft)
ELEVATION: 15.41(ft)
THE AVERAGE COMBINED GRID FACTOR USED ON THIS PROJECT
(GROUND TO GRID) IS: 0.999877661
THE N.C. LAMBERT GRID BEARING AND
LOCALIZED HORIZONTAL GROUND DISTANCE FROM
"GPS1" TO -L- STATION 10+00 IS
S54°33'15.4"E 544.545'(ft)
ALL LINEAR DIMENSIONS ARE LOCALIZED HORIZONTAL DISTANCES
VERTICAL DATUM USED IS NAVD 88

PREPARED IN THE OFFICE OF:

ESP
License No. F-1407
2200 Gateway Centre Blvd Morrisville, NC 27560

2018 STANDARD SPECIFICATIONS

RIGHT OF WAY DATE:	*LETTING DATE:*
DECEMBER 3, 2021	MAY 25, 2022

DOCUMENT NOT CONSIDERED FINAL
UNLESS ALL SIGNATURES COMPLETED

PROFESSIONAL LAND SURVEYOR

NORTH CAROLINA PROFESSIONAL SEAL L-3866 LAND SURVEYOR TONYA E.S. GIBBS

NORTH CAROLINA LICENSE NO. F-1407 ESP ASSOCIATES, INC.

Tonya Gibbs
2E2F55AA0EC84DA...

3/29/2022

SIGNATURE: *DATE:*

STATE OF NORTH CAROLINA DEPARTMENT OF TRANSPORTATION

02/23/2022

SURVEY CONTROL SHEET

W/EXISTING CENTERLINE ALIGNMENTS PRIOR TO CONSTRUCTION

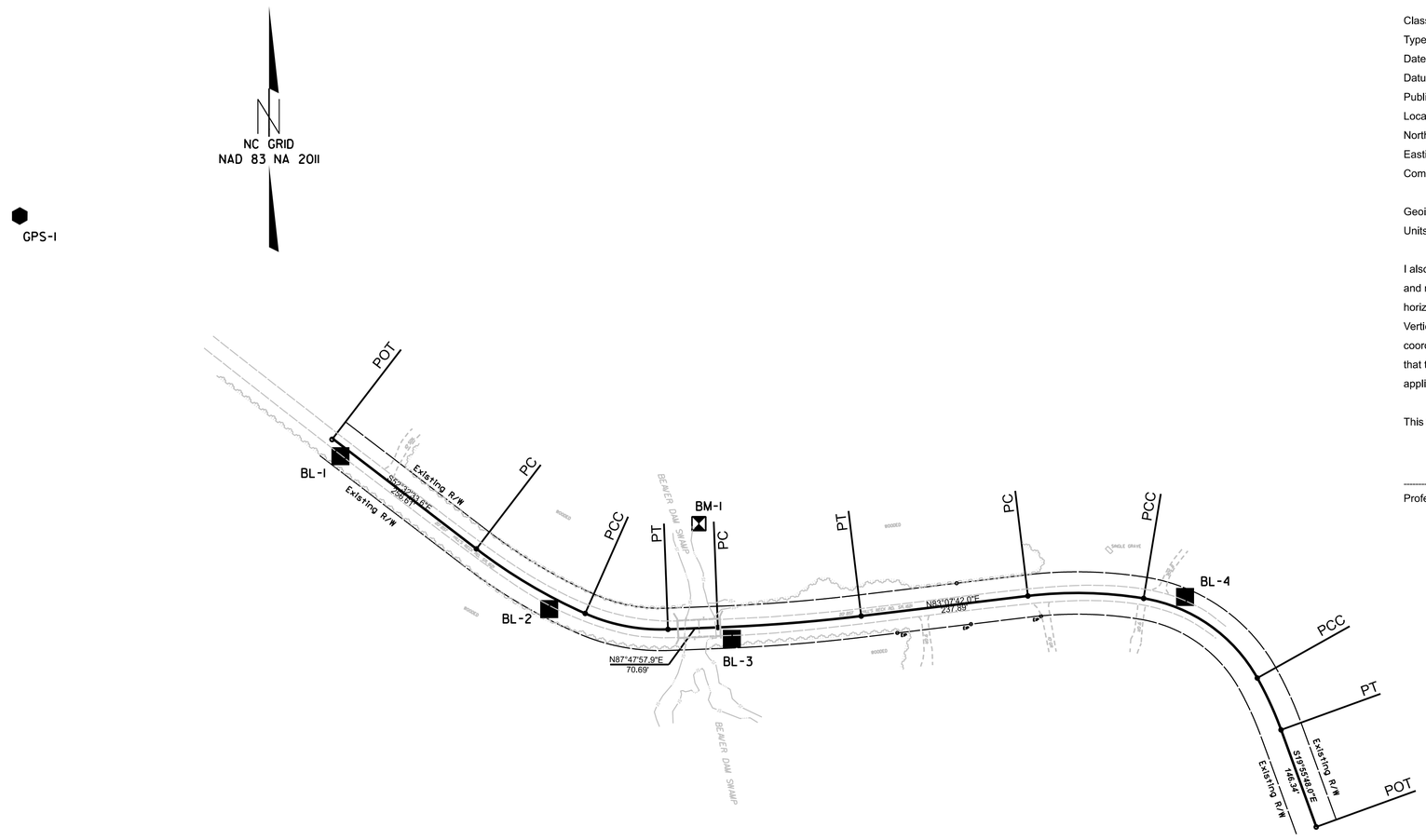

I, Jimmy E. Liverman Jr., PLS, certify that the Project Control was performed under my supervision from an actual GPS survey made under my supervision and the following information was used to perform the survey:

Class of survey: ***AA***
Type of GPS field procedure: RTN
Dates of survey: November 2020
Datum/Epoch: NAD83 (2011)
Published/Fixed-control use: N/A
Localized around: GPS1
Northing: 550455.7020
Easting: 2576882.2380
Combined grid factor: 0.999877661

Geoid model: Geoid12B
Units: US Survey Feet

I also certify that the Baseline Control for this project was completed under my direct and responsible charge from an actual survey made under my supervision; that all horizontal closures had a minimum ratio of precision of 1:20,000 (Class AA) and Vertical accuracy to Class A. Field work was performed in November 2020, and all coordinates are based on NAD 83/2011 and all elevations are based on NAVD 88; that this survey was performed to meet the requirements of 21NCAC 56.1600 as applicable.

This 6th day of April, 2022.

DocuSigned by:
Jimmy Liverman, Jr.
C780A607406743...

Professional Land Surveyor L-4457

NORTH CAROLINA PROFESSIONAL SEAL L-4457 LAND SURVEYOR JIMMY E. LIVERMAN JR.

Jimmy E. Liverman Jr.
NCDOT Division 1
Locating Engineer

SEE SHEET RW2C-2
FOR FURTHER
ALIGNMENT DETAILS

NOTES:

1. PROJECT CONTROL WAS ESTABLISHED USING GNSS, THE GLOBAL NAVIGATION SATELLITE SYSTEM.
2. THE PROPOSED ALIGNMENT CONTROL DATA FOR THIS PROJECT HAS BEEN COMPILED FROM VARIOUS SOURCES. IF FURTHER INFORMATION REGARDING PROJECT CONTROL IS NEEDED, PLEASE CONTACT THE LOCATION AND SURVEYS UNIT.
3. PLAN SHEET PREPARED BY ESP ASSOCIATES, INC.
4. NOT TO SCALE

DOCUMENT NOT CONSIDERED FINAL
UNLESS ALL SIGNATURES COMPETED

BP2.R019.1
R/W | 02C-1

NORTH CAROLINA
DEPARTMENT OF TRANSPORTATION

2018 STANDARD SPECIFICATIONS

TIP PROJECT: BP2.R019.1
COUNTY : CRAVEN

02/18/2022

SURVEY CONTROL SHEET

W/ EXISTING CENTERLINE ALIGNMENT PRIOR TO CONSTRUCTION

BL

POINT	DESC.	NORTH	EAST	ELEVATION
1	BL-1	550115.1319	2577336.6267	10.21
2	BL-2	549898.5268	2577632.4329	10.03
3	BL-3	549856.5889	2577891.2379	8.68
4	BL-4	549916.0704	2578533.2768	12.25
GPS1	GPS1	550455.7020	2576882.2380	15.41
GPS2	GPS2	551615.1741	2575414.8420	20.72

BM1 ELEVATION = 4.36
N 550019 E 2577844
STA 16+05.51 OFFSET -147.93
RAILROAD SPIKE IN A 10" HARDWOOD

EL

EXISTING CENTERLING ALIGNMENT

POINT	NORTHING	EASTING	BEARING	DIST	DELTA	D	L	T	R
START	550140.030	2577325.682							
LINE			S52°32'33.6"E	256.61					
PC	549983.965	2577529.383							
CURVE					13°31'51.7" Left	07°31'50.1"	179.68	90.26	760.84
PCC	549892.465	2577683.537							
CURVE					26°07'36.8" Left	21°40'45.6"	120.52	61.32	264.29
PT	549869.949	2577800.870							
LINE			N87°47'57.9"E	70.69					
PC	549872.664	2577871.509							
CURVE					04°40'15.9" Left	02°17'30.6"	203.81	101.96	2500.00
PT	549888.778	2578074.628							
LINE			N83°07'42.0"E	237.89					
PC	549917.241	2578310.809							
CURVE					16°09'06.9" Right	09°48'29.2"	164.68	82.89	584.17
PCC	549913.791	2578474.907							
CURVE					51°28'22.2" Right	25°18'20.0"	203.41	109.14	226.42
PCC	549800.960	2578635.948							
CURVE					09°19'00.9" Right	11°31'03.6"	80.89	40.54	497.46
PT	549727.484	2578669.570							
LINE			S19°55'48.0"E	146.34					
END	549589.905	2578719.454							

I, Jimmy E. Liverman Jr., PLS, certify that the Project Control was performed under my supervision from an actual GPS survey made under my supervision and the following information was used to perform the survey:

Class of survey: ***AA***
Type of GPS field procedure: RTN (VRS)
Dates of survey: November 2020
Datum/Epoch: NAD83 (2011)
Published/Fixed-control use: N/A
Localized around: GPS1
Northing: 550455.702
Easting: 2576882.238
Combined grid factor: 0.999877661
Geoid model: Geoid12B
Units: US Survey Feet

I also certify that the Baseline Control for this project was completed under my direct and responsible charge from an actual survey made under my supervision; that all horizontal closures had a minimum ratio of precision of 1:20,000 (Class AA) and Vertical accuracy to Class A. Field work was performed in November 2020 , and all coordinates are based on NAD 83/2011 and all elevations are based on NAVD 88; that this survey was performed to meet the requirements of 21NCAC 56.1600 as applicable.

This 6th day of April, 2022.

DocuSigned by:
Jimmy Liverman, Jr.
C782A5071067430...

Professional Land Surveyor L-4457

NORTH CAROLINA PROFESSIONAL SEAL L-4457 LAND SURVEYOR JIMMY E. LIVERMAN JR.

Jimmy E. Liverman Jr.
NCDOT Division 1
Locating Engineer

NOTES:

1. PROJECT CONTROL WAS ESTABLISHED USING GNSS, THE GLOBAL NAVIGATION SATELLITE SYSTEM.
2. THE PROPOSED ALIGNMENT CONTROL DATA FOR THIS PROJECT HAS BEEN COMPILED FROM VARIOUS SOURCES. IF FURTHER INFORMATION REGARDING PROJECT CONTROL IS NEEDED, PLEASE CONTACT THE LOCATION AND SURVEYS UNIT.

#. PLAN SHEET PREPARED BY ESP ASSOCIATES, INC.

DOCUMENT NOT CONSIDERED FINAL
UNLESS ALL SIGNATURES COMPLETED

BP2.R019.1
R/W | 02C-2

NORTH CAROLINA
DEPARTMENT OF TRANSPORTATION

2018 STANDARD SPECIFICATIONS

TIP PROJECT: BP2.R019.1
COUNTY: PITT

02/18/2022

PROPOSED ALIGNMENT CONTROL SHEET

I, Jimmy E. Liverman Jr., PLS, certify that the data compiled came from available surveys/mapping performed by others and provided to me by NCDOT and do not certify to the accuracy or quality of the individual data sources.

This 6th day of April, 2022.

DocuSigned by:
Jimmy Liverman, Jr.
C782A50719E7430...

Professional Land Surveyor L-4457

NORTH CAROLINA PROFESSIONAL SEAL L-4457 LAND SURVEYOR JIMMY E. LIVERMAN JR.

Jimmy E. Liverman Jr.
NCDOT Division 1
Locating Engineer

L

PROPOSED ALIGNMENT			
TYPE	STATION	NORTH	EAST
POT	10+00.00	550140.0298	2577325.6819
PC	12+56.61	549983.9650	2577529.3834
PCC	14+36.29	549892.4651	2577683.5370
PT	15+56.81	549869.9492	2577800.8698
PC	16+27.50	549872.6636	2577871.5093
PT	18+31.32	549888.7784	2578074.6293
PC	20+69.21	549917.2408	2578310.8092
PCC	22+33.89	549913.7911	2578474.9074
PCC	24+37.29	549800.9597	2578635.9477
PT	25+18.18	549727.4835	2578669.5698
POT	26+64.53	549589.9053	2578719.4539

NOTES:

1. PROJECT CONTROL WAS ESTABLISHED USING GNSS, THE GLOBAL NAVIGATION SATELLITE SYSTEM.
2. THE PROPOSED ALIGNMENT CONTROL DATA FOR THIS PROJECT HAS BEEN COMPILED FROM VARIOUS SOURCES. IF FURTHER INFORMATION REGARDING PROJECT CONTROL IS NEEDED, PLEASE CONTACT THE LOCATION AND SURVEYS UNIT.
3. PLAN SHEET PREPARED BY ESP ASSOCIATES,INC.

DOCUMENT NOT CONSIDERED FINAL
UNLESS ALL SIGNATURES COMPLETED

BP2.R019.1
R/W | 02D-1

NORTH CAROLINA
DEPARTMENT OF TRANSPORTATION

2018 STANDARD SPECIFICATIONS

TIP PROJECT: BP2.R019.1
COUNTY: CRAVEN

DocuSign Envelope ID: DF2EA84B-9AAC-40F1-9F66-6D617B10F14A

02/18/2022

RIGHT OF WAY CONTROL SHEET

ROW MARKER IRON PIN AND CAP: L			
STATION	OFFSET	NORTH	EAST
15+35.00	-48.00	549917.9647	2577781.1831
15+35.00	-30.00	549899.9823	2577780.3893
15+35.00	30.00	549840.0406	2577777.7432
15+35.00	48.00	549822.0581	2577776.9494
17+10.00	48.00	549829.3132	2577957.3044
17+10.00	30.00	549847.2673	2577956.0202
17+10.00	-48.00	549925.0686	2577950.4552
17+10.00	-30.00	549907.1144	2577951.7394

PERMANENT DRAINAGE EASEMENT MARKER IRON PIN AND CAP: L			
STATION	OFFSET	NORTH	EAST
13+80.00	-30.00	549943.6256	2577647.1316
14+65.00	-38.00	549918.4703	2577721.9108

NOTES:

1. PROJECT CONTROL WAS ESTABLISHED USING GNSS, THE GLOBAL NAVIGATION SATELLITE SYSTEM.
2. THE PROPOSED ALIGNMENT CONTROL DATA FOR THIS PROJECT HAS BEEN COMPILED FROM VARIOUS SOURCES. IF FURTHER INFORMATION REGARDING PROJECT CONTROL IS NEEDED, PLEASE CONTACT THE LOCATION AND SURVEYS UNIT.
3. RIGHT OF WAY MONUMENTATION ESTABLISHED IN JANUARY, 2022.

I , Toynia E.S. Gibbs , certify that the right of way and permanent easement monumentation for this project shown herein was completed under my direct and responsible charge from an actual survey made under my supervision; that all horizontal closures had a minimum ratio of precision of 1:10,000 (Class A). Field work was performed in January 27th, 2022, and all coordinates are based on NAD83/2011; That this survey was performed to meet the requirements of 21NCAC 56.1600 as applicable.

This date of 3/29/2022.

DocuSigned by:
Toynia Gibbs
2E2F55AA0EC84DA...

Professional Land Surveyor L-3866

DOCUMENT NOT CONSIDERED FINAL
UNLESS ALL SIGNATURES COMPLETED

BP2.R019.1
R/W | 03E-1

NORTH CAROLINA
DEPARTMENT OF TRANSPORTATION

2018 STANDARD SPECIFICATIONS

TIP PROJECT: BP2.R019.1
COUNTY : CRAVEN

ESP
License No. F-1407
2200 Gateway Centre Blvd Morrisville, NC 27560

PROFESSIONAL LAND SURVEYOR

NORTH CAROLINA PROFESSIONAL SEAL L-3866 LAND SURVEYOR TOYNIA E.S. GIBBS

3/29/2022

DocuSigned by:
Toynia Gibbs
2E2F55AA0EC84DA...

DocuSign Envelope ID: DF2EA84B-9AAC-40F1-9F66-6D617B10F14A

02/25/2022

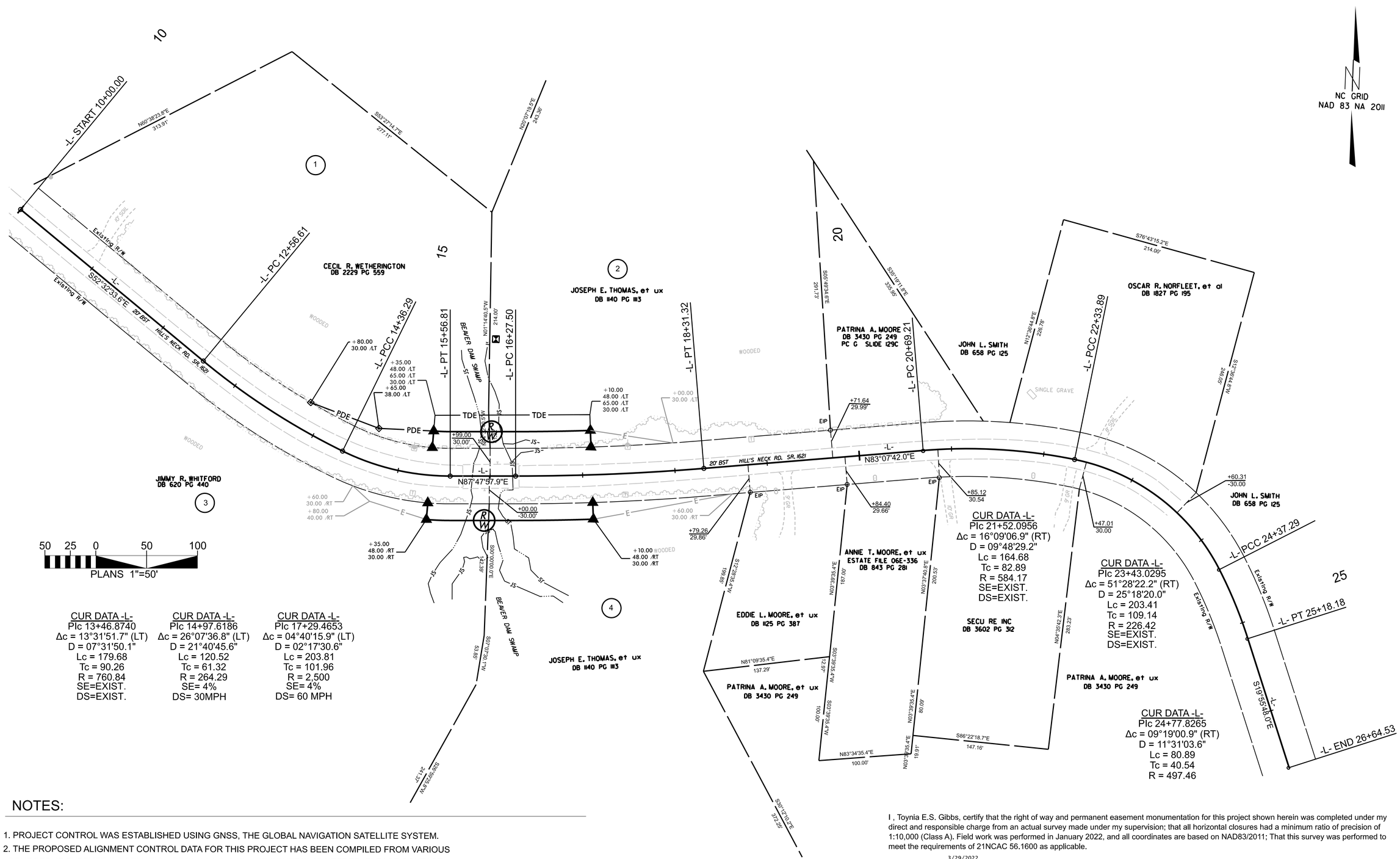

CUR DATA -L-
PIc 13+46.8740
Δc = 13°31'51.7" (LT)
D = 07°31'50.1"
Lc = 179.68
Tc = 90.26
R = 760.84
SE=EXIST.
DS=EXIST.

CUR DATA -L-
PIc 14+97.6186
Δc = 26°07'36.8" (LT)
D = 21°40'45.6"
Lc = 120.52
Tc = 61.32
R = 264.29
SE= 4%
DS= 30MPH

CUR DATA -L-
PIc 17+29.4653
Δc = 04°40'15.9" (LT)
D = 02°17'30.6"
Lc = 203.81
Tc = 101.96
R = 2,500
SE= 4%
DS= 60 MPH

CUR DATA -L-
PIc 21+52.0956
Δc = 16°09'06.9" (RT)
D = 09°48'29.2"
Lc = 164.68
Tc = 82.89
R = 584.17
SE=EXIST.
DS=EXIST.

CUR DATA -L-
PIc 23+43.0295
Δc = 51°28'22.2" (RT)
D = 25°18'20.0"
Lc = 203.41
Tc = 109.14
R = 226.42
SE=EXIST.
DS=EXIST.

CUR DATA -L-
PIc 24+77.8265
Δc = 09°19'00.9" (RT)
D = 11°31'03.6"
Lc = 80.89
Tc = 40.54
R = 497.46

NOTES:

1. PROJECT CONTROL WAS ESTABLISHED USING GNSS, THE GLOBAL NAVIGATION SATELLITE SYSTEM.
2. THE PROPOSED ALIGNMENT CONTROL DATA FOR THIS PROJECT HAS BEEN COMPILED FROM VARIOUS SOURCES. IF FURTHER INFORMATION REGARDING PROJECT CONTROL IS NEEDED, PLEASE CONTACT THE LOCATION AND SURVEYS UNIT.
3. RIGHT OF WAY MONUMENTATION ESTABLISHED IN JANUARY, 2022

I , Toynia E.S. Gibbs, certify that the right of way and permanent easement monumentation for this project shown herein was completed under my direct and responsible charge from an actual survey made under my supervision; that all horizontal closures had a minimum ratio of precision of 1:10,000 (Class A). Field work was performed in January 2022, and all coordinates are based on NAD83/2011; That this survey was performed to meet the requirements of 21NCAC 56.1600 as applicable.

This day of 3/29/2022.

DocuSigned by:
Toynia Gibbs
7E2F56AA0EC84DA...

Professional Land Surveyor L-3866

DOCUMENT NOT CONSIDERED FINAL UNLESS ALL SIGNATURES COMPETED

BP2.R019.1
RW | 004

NORTH CAROLINA DEPARTMENT OF TRANSPORTATION

2018 STANDARD SPECIFICATIONS

TIP PROJECT: BP2.R019.1
COUNTY : CRAVEN

ESP
License No. F-1407
2200 Gateway Centre Blvd Morrisville, NC 27560

PROFESSIONAL LAND SURVEYOR

NORTH CAROLINA PROFESSIONAL SEAL L-3866 LAND SURVEYOR TOYNIA E.S. GIBBS
3/29/2022

DocuSigned by:
Toynia Gibbs
7E2F56AA0EC84DA...

DocuSign Envelope ID: 7D339874-A1B8-404B-B219-EC71B6131EF7

08/12/2021

PROJECT: BP2.R019.1

CONTRACT:

STATE OF NORTH CAROLINA
DIVISION OF HIGHWAYS

TRANSPORTATION MANAGEMENT PLAN

CRAVEN COUNTY

LOCATION: REPLACE BRIDGE NO. 240026 OVER BEAVER DAM SWAMP ON SR 1621 (HILLS NECK ROAD)

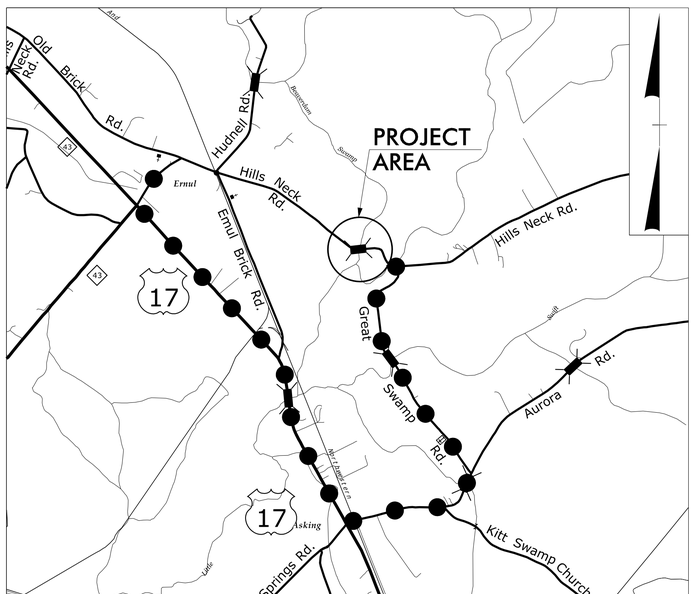

VICINITY MAP (NTS)

DETOUR ROUTE

INDEX OF SHEETS

SHEET NO.	TITLE
TMP-1	TITLE SHEET, VICINITY MAP, AND INDEX OF SHEETS
TMP-1A	LIST OF APPLICABLE ROADWAY STANDARD DRAWINGS, AND LEGEND
TMP-1B	TRANSPORTATION OPERATIONS PLAN: (MANAGEMENT STRATEGIES, GENERAL NOTES, AND LOCAL NOTES)
TMP-2	OFFSITE DETOUR

BP2.R019.1

TMP | 1

ROADWAY DESIGN ENGINEER

NORTH CAROLINA PROFESSIONAL SEAL 043767 ENGINEER

5/24/2022

DocuSigned by: Adam M. Conrad

DOCUMENT NOT CONSIDERED FINAL UNLESS ALL SIGNATURES COMPLETED

STATE OF NORTH CAROLINA

ROADWAY DESIGN UNIT

PREPARED BY

CDM Smith

CDM Smith Inc.
1000 Sherwood Avenue
Suite 400
Raleigh, NC 27612-3328
NC COA No. F-1255

NCDOT CONTACTS:

KEN THORNEWELL, PE
PROJECT ENGINEER

SPENCER JENNINGS
PROJECT DESIGN ENGINEER

PLANS PREPARED BY:

ADAM M. CONRAD, PE
PROJECT ENGINEER

RYAN J. DEMUYNCK, EI
PROJECT DESIGN ENGINEER

STATE OF NORTH CAROLINA DEPARTMENT OF TRANSPORTATION

DocuSign Envelope ID: 7D339874-A1B8-404B-B219-EC71B6131EF7

5/26/20

ROADWAY STANDARD DRAWINGS

THE FOLLOWING ROADWAY STANDARDS AS SHOWN IN "ROADWAY STANDARD DRAWINGS" N.C. DEPARTMENT OF TRANSPORTATION - RALEIGH, N.C., DATED JANUARY 2018 ARE APPLICABLE TO THIS PROJECT AND BY REFERENCE HEREBY ARE CONSIDERED A PART OF THESE PLANS:

STD. NO.	TITLE
1101.03	TEMPORARY ROAD CLOSURES
1101.11	TRAFFIC CONTROL DESIGN TABLES
1110.01	STATIONARY WORK ZONE SIGNS
1145.01	BARRICADES

LEGEND

GENERAL

- DIRECTION OF TRAFFIC FLOW
- DIRECTION OF PEDESTRIAN TRAFFIC FLOW
- EXIST. PVMT.
- NORTH ARROW
- PROPOSED PVMT.
- TEMP. SHORING (LOCATION PURPOSES ONLY)

SIGNALS

EXISTING PROPOSED TEMPORARY

PAVEMENT MARKINGS

- EXISTING LINES
- TEMPORARY LINES

TRAFFIC CONTROL DEVICES

- BARRICADE (TYPE III)
- CONE
- DRUM SKINNY DRUM TUBULAR MARKER
- TEMPORARY CRASH CUSHION
- FLASHING ARROW BOARD
- FLAGGER
- LAW ENFORCEMENT
- TRUCK MOUNTED ATTENUATOR (TMA)
- CHANGEABLE MESSAGE SIGN

TEMPORARY SIGNING

- PORTABLE SIGN
- STATIONARY SIGN
- STATIONARY OR PORTABLE SIGN

PAVEMENT MARKERS

- CRYSTAL/CRYSTAL
- CRYSTAL/RED
- YELLOW/YELLOW

PAVEMENT MARKING SYMBOLS

PAVEMENT MARKING SYMBOLS

BP2.R019.1

TMP	1A

ROADWAY DESIGN ENGINEER

NORTH CAROLINA PROFESSIONAL SEAL 043767 ENGINEER

3/24/2022

DocuSigned by:
Adam H. Conrad
D0DC5F7AE0F04AD...

DOCUMENT NOT CONSIDERED FINAL UNLESS ALL SIGNATURES COMPLETED

STATE OF NORTH CAROLINA

ROADWAY DESIGN UNIT

PREPARED BY

CDM Smith

CDM Smith Inc.
5400 Glenwood Avenue
Suite 400
Raleigh, NC 27612-3228
NC COA No. F-1255

DocuSign Envelope ID: 7D339874-A1B8-404B-B219-EC71B6131EF7

5/26/20

MANAGEMENT STRATEGIES

THE FOLLOWING LISTED WORK ZONE STRATEGIES ARE RECOMMENDED FOR INCLUSION WITHIN THIS TRANSPORTATION MANAGEMENT PLAN (TMP).

RECOMMENDED STRATEGIES:

TRAFFIC MANAGEMENT STRATEGIES:
FULL ROADWAY CLOSURES
OFF-SITE DETOURS / USE OF ALTERNATIVE ROUTES

GENERAL NOTES

CHANGES MAY BE REQUIRED WHEN PHYSICAL DIMENSIONS IN THE DETAIL DRAWINGS, STANDARD DETAILS, AND ROADWAY DETAILS ARE NOT ATTAINABLE TO MEET FIELD CONDITIONS OR RESULT IN DUPLICATE OR UNDESIRED OVERLAPPING OF DEVICES. MODIFICATION MAY INCLUDE: MOVING, SUPPLEMENTING, COVERING, OR REMOVAL OF DEVICES AS DIRECTED BY THE ENGINEER.

THE FOLLOWING GENERAL NOTES APPLY AT ALL TIMES FOR THE DURATION OF THE CONSTRUCTION PROJECT EXCEPT WHEN OTHERWISE NOTED IN THE PLAN OR DIRECTED BY THE ENGINEER.

TRAFFIC PATTERN ALTERATIONS

A) NOTIFY THE ENGINEER THIRTY (30) CALENDAR DAYS PRIOR TO ANY TRAFFIC PATTERN ALTERATION.

SIGNING

B) INSTALL ADVANCE WORK ZONE WARNING SIGNS WHEN WORK IS WITHIN 40 FT FROM THE EDGE OF TRAVEL LANE AND NO MORE THAN THREE (3) DAYS PRIOR TO THE BEGINNING OF CONSTRUCTION.

C) PROVIDE SIGNING AND DEVICES REQUIRED TO CLOSE THE ROAD ACCORDING TO THE ROADWAY STANDARD DRAWINGS AND TRAFFIC CONTROL PLANS.

PROVIDE SIGNING REQUIRED FOR THE OFF-SITE DETOUR ROUTE AS SHOWN IN THE TRAFFIC CONTROL PLANS.

D) COVER OR REMOVE ALL SIGNS AND DEVICES REQUIRED TO CLOSE THE ROAD WHEN ROAD CLOSURE IS NOT IN OPERATION.

COVER OR REMOVE ALL SIGNS REQUIRED FOR THE OFF-SITE DETOUR WHEN THE DETOUR IS NOT IN OPERATION.

E) ENSURE ALL NECESSARY SIGNING IS IN PLACE PRIOR TO ALTERING ANY TRAFFIC PATTERN.

TRAFFIC CONTROL DEVICES

F) PLACE TYPE III BARRICADES, WITH "ROAD CLOSED" SIGN R11-2 ATTACHED, OF SUFFICIENT LENGTH TO CLOSE ENTIRE ROADWAY.

G) STATE FORCES WILL INSTALL AND MAINTAIN THE PROJECT DETOUR AND TYPE III BARRICADES AT THE PROJECT LIMITS. STATE FORCES WILL INSTALL MARKINGS AND MARKERS ON THE FINISHED PROJECT. CONTACT JIM EVANS (252)439-2829 TWO WEEKS PRIOR TO CLOSING THE ROAD FOR DETOUR INSTALLATION.

PHASING

STEP 1: USING SHEET TMP-2 AND RSD 1101.03 (SHEET 1 OF 9), INSTALL DETOUR ROUTE SIGNING TO CLOSE SR 1621 (HILLS NECK ROAD) ON PROPOSED - L- FROM STA. 13+50+/- TO STA. 19+50+/-.

STEP 2: AWAY FROM TRAFFIC, COMPLETE CONSTRUCTION OF PROPOSED CULVERT AND ROADWAY APPROACHES, INCLUDING DRAINAGE, GUARDRAIL, FINAL PAVEMENT MARKINGS AND MARKERS ON PROPOSED -L- FROM STA. 13+50+/- TO STA. 19+50+/-.

STEP 3: REMOVE TEMPORARY TRAFFIC CONTROL DEVICES AND OPEN -L- TO PROPOSED 2-LANE, 2-WAY TRAFFIC PATTERN.

LOCAL NOTES

1. NCDOT DIVISION 2 WILL CONTACT CRAVEN COUNTY SCHOOL DISTRICT AT (252)514-6377 AT LEAST ONE MONTH PRIOR TO CONSTRUCTION TO COORDINATE CONSTRUCTION ACTIVITIES WITH SCHOOL TRANSPORTATION SCHEDULES.

2. CRAVEN COUNTY EMERGENCY SERVICES WILL BE CONTACTED AT (252)636-6608 AT LEAST ONE MONTH PRIOR TO CONSTRUCTION TO MAKE THE NECESSARY TEMPORARY REASSIGNMENT TO PRIMARY RESPONSE UNITS.

BP2.R019.1
TMP | 1B

ROADWAY DESIGN ENGINEER
NORTH CAROLINA PROFESSIONAL SEAL 043767 ENGINEER
3/24/2022
DocuSigned by:
DOCUSIGNED BY:AND
PROFESSIONAL CONTROL

DOCUMENT NOT CONSIDERED FINAL UNLESS ALL SIGNATURES COMPLETED

STATE OF NORTH CAROLINA

ROADWAY DESIGN UNIT

PREPARED BY

CDM Smith
CDM Smith Inc.
5400 Glenwood Avenue
Suite 400
Raleigh, NC 27612-3228
NC COA No. F-1255

DocuSign Envelope ID: 7D339874-A1B8-404B-B219-EC71B6131EF7

5/26/20

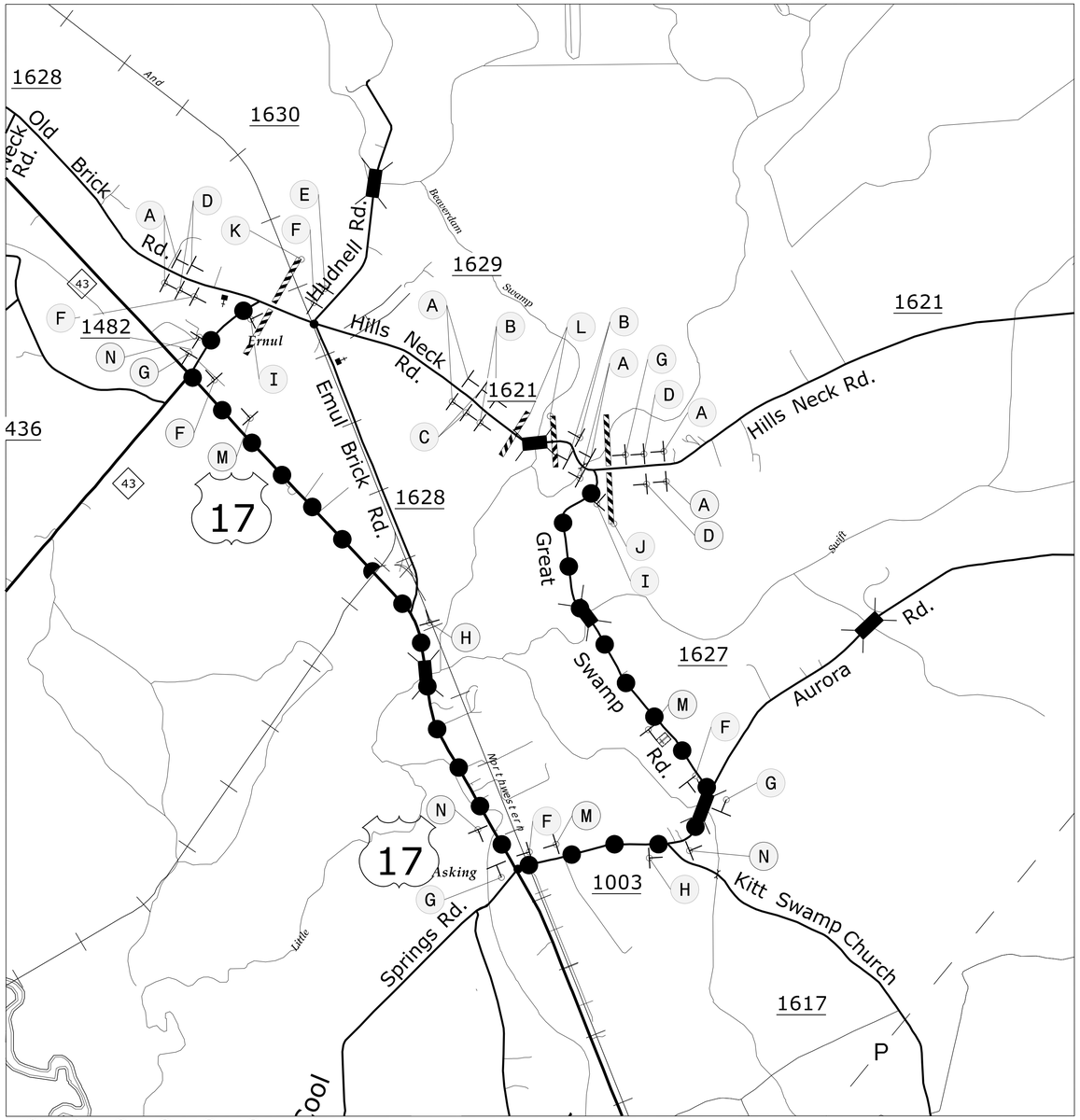

OFF-SITE DETOUR ROUTE

W20-3
48" X 48"

A

W20-3
48" X 48"

B

W20-3
48" X 48"

C

W20-2
48" X 48"

D

W20-3
48" X 48"

SP-4L
42" X 12"

E

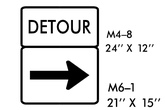

M4-8
24" X 12"

M6-1
21" X 15"

F

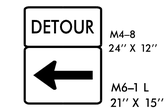

M4-8
24" X 12"

M6-1 L
21" X 15"

G

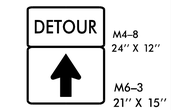

M4-8
24" X 12"

M6-3
21" X 15"

H

M4-8 A
24" X 18"

R11-4
60" x 30"

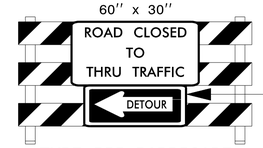

M4-10L
48" x 18"

TYPE III BARRICADE

I

R11-4
60" x 30"

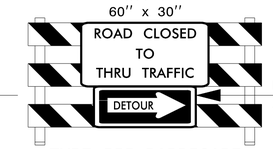

M4-10R
48" x 18"

TYPE III BARRICADE

J

K

R11-2
48" x 30"

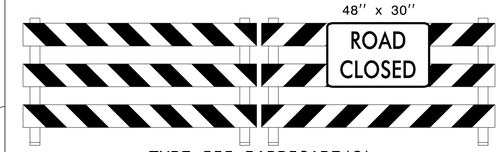

TYPE III BARRICADE(S)

L

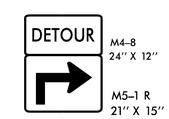

M4-8
24" X 12"

M5-1 R
21" X 15"

M

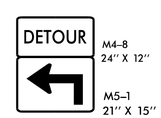

M4-8
24" X 12"

M5-1
21" X 15"

N

BP2.R019.1

TMP	2

ROADWAY DESIGN ENGINEER

NORTH CAROLINA PROFESSIONAL SEAL 043767 ENGINEER ADAM M. CONRAD

3/24/2022

DocuSigned by:
Adam M. Conrad
C0DC7F4B7F0B4AD...

DOCUMENT NOT CONSIDERED FINAL UNLESS ALL SIGNATURES COMPLETED

STATE OF NORTH CAROLINA

ROADWAY DESIGN UNIT

PREPARED BY

CDM Smith

CDM Smith Inc.
5400 Glenwood Avenue
Suite 400
Raleigh, NC 27612-3228
NC COA No. F-1255

PROJECT: BP2.R019.1

STATE	STATE PROJECT REFERENCE NO.	SHEET NO.	TOTAL SHEETS
N.C.	BP2.R019.1	EC-1	7

STATE PROJ. NO.	F.A. PROJ. NO.	DESCRIPTION

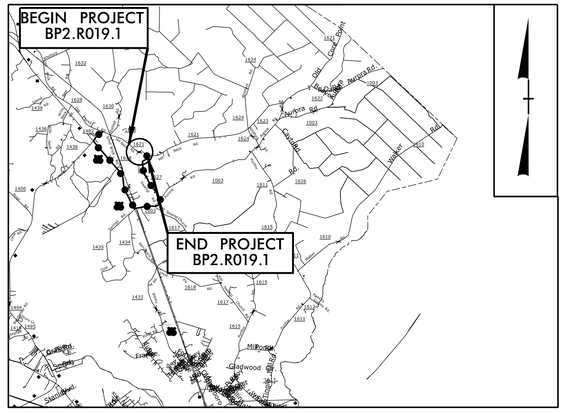

VICINITY MAP
NOT TO SCALE

DETOUR ROUTE

STATE OF NORTH CAROLINA
DIVISION OF HIGHWAYS

PLAN FOR PROPOSED
HIGHWAY EROSION CONTROL

CRAVEN COUNTY

LOCATION: *REPLACE BRIDGE NO. 240026 OVER BEAVER DAM SWAMP ON SR 1621 (HILLS NECK ROAD)*

TYPE OF WORK: *GRADING, DRAINAGE, PAVING AND STRUCTURE*

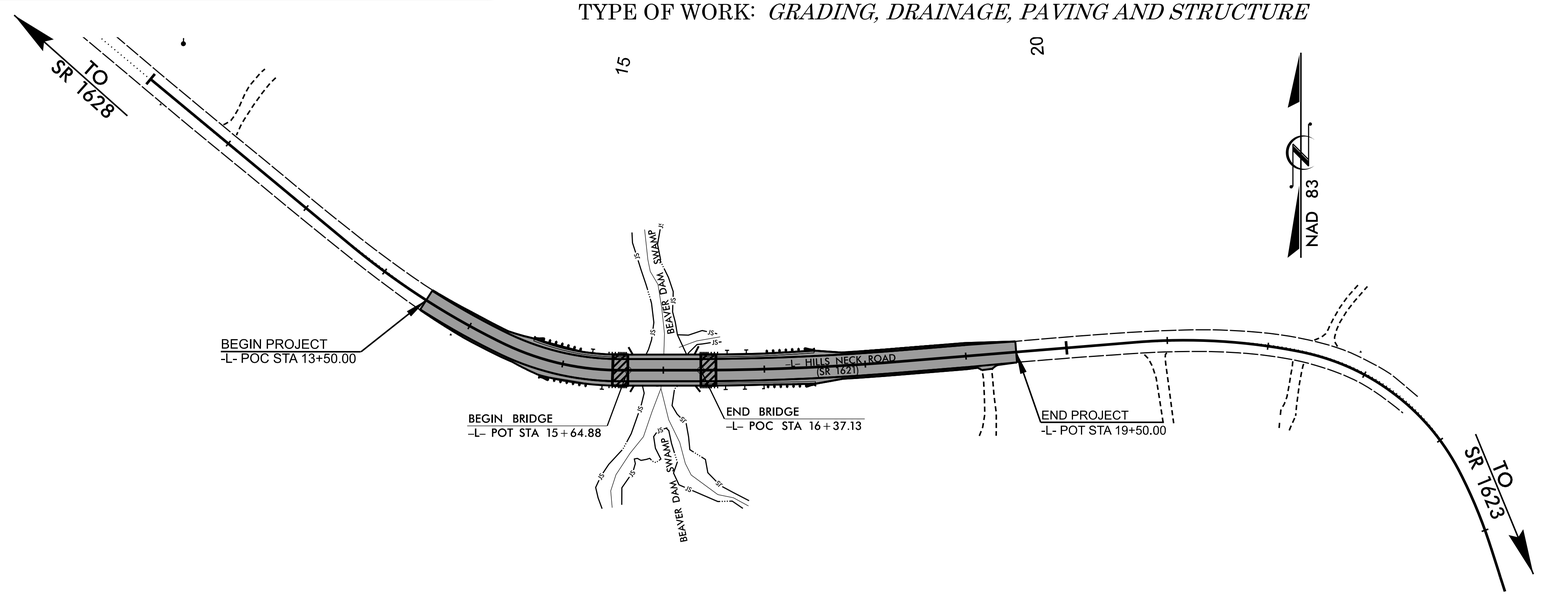

EROSION AND SEDIMENT CONTROL MEASURES

Std. #	Description	Symbol
1630.03	Temporary Silt Ditch	TSD
1630.05	Temporary Diversion	TD
1605.01	Temporary Silt Fence	
1606.01	Special Sediment Control Fence	
1622.01	Temporary Berms and Slope Drains	
1630.02	Silt Basin Type B	
1633.01	Temporary Rock Silt Check Type-A	
	Temporary Rock Silt Check Type-A with Matting and Polyacrylamide (PAM)	
1633.02	Temporary Rock Silt Check Type-B	
	Wattle/ Coir Fiber Wattle	SW CFW
	Wattle/ Coir Fiber Wattle with Polyacrylamide (PAM)	
1634.01	Temporary Rock Sediment Dam Type-A	
1634.02	Temporary Rock Sediment Dam Type-B	
1635.01	Rock Pipe Inlet Sediment Trap Type-A	
1635.02	Rock Pipe Inlet Sediment Trap Type-B	
1630.04	Stilling Basin	
1630.06	Special Stilling Basin	
	Rock Inlet Sediment Trap:	
1632.01	Type A	A
1632.02	Type B	B
1632.03	Type C	C
	Skimmer Basin	
	Tiered Skimmer Basin	
	Infiltration Basin	

THIS PROJECT CONTAINS EROSION CONTROL PLANS FOR CLEARING AND GRUBBING PHASE OF CONSTRUCTION.

ENVIRONMENTALLY SENSITIVE AREA(S) EXIST ON THIS PROJECT

Refer To E. C. Special Provisions for Special Considerations.

THIS PROJECT HAS BEEN DESIGNED TO SENSITIVE WATERSHED STANDARDS.

GRAPHIC SCALE

50 25 0 50 100

PLANS

THESE EROSION AND SEDIMENT CONTROL PLANS COMPLY WITH THE APPLICABLE REGULATIONS SET FORTH BY THE NCG-010000 GENERAL CONSTRUCTION PERMIT EFFECTIVE APRIL 1, 2019 AND ISSUED BY THE NORTH CAROLINA DEPARTMENT OF ENVIRONMENTAL QUALITY DIVISION OF WATER RESOURCES.

CDM Smith

Prepared In the Office of:

CDM Smith Inc.
5400 Glenwood Avenue, Suite 400
Raleigh, NC 27612-3228
NC COA No. F-1255

Designed by:

SHIRSHANT SHARMA, PE *4208*
NAME *LEVEL III CERTIFICATION NO.*

Roadway Standard Drawings

The following roadway english standards as appear in "Roadway Standard Drawings"– Roadway Design Unit – N. C. Department of Transportation – Raleigh, N. C., dated January 2018 and the latest revison thereto are applicable to this project and by reference hereby are considered a part of these plans.

1604.01	Railroad Erosion Control Detail	1632.01	Rock Inlet Sediment Trap Type A
1605.01	Temporary Silt Fence	1632.02	Rock Inlet Sediment Trap Type B
1606.01	Special Sediment Control Fence	1632.03	Rock Inlet Sediment Trap Type C
1607.01	Gravel Construction Entrance	1633.01	Temporary Rock Silt Check Type A
1622.01	Temporary Berms and Slope Drains	1633.02	Temporary Rock Silt Check Type B
1630.01	Riser Basin	1634.01	Temporary Rock Sediment Dam Type A
1630.02	Silt Basin Type B	1634.02	Temporary Rock Sediment Dam Type B
1630.03	Temporary Silt Ditch	1635.01	Rock Pipe Inlet Sediment Trap Type A
1630.04	Stilling Basin	1635.02	Rock Pipe Inlet Sediment Trap Type B
1630.05	Temporary Diversion	1640.01	Coir Fiber Baffle
1630.06	Special Stilling Basin	1645.01	Temporary Stream Crossing
1631.01	Matting Installation		

PROJECT REFERENCE NO.	SHEET NO.
BP2.R019J	EC-2
R/W SHEET NO.	
ROADWAY DESIGN ENGINEER	HYDRAULICS ENGINEER

SILT FENCE COIR FIBER WATTLE BREAK DETAIL

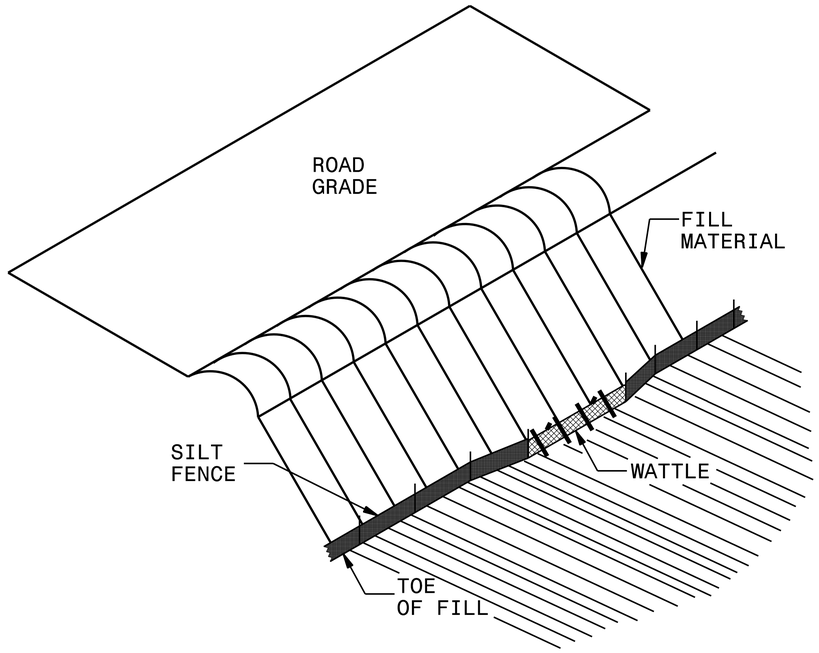

ISOMETRIC VIEW

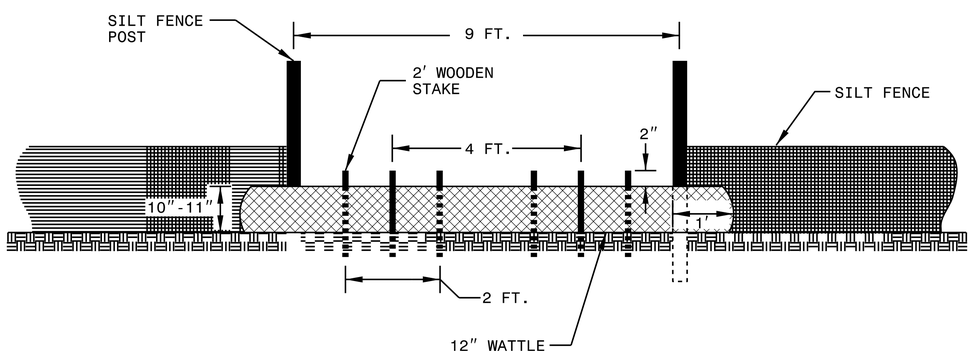

VIEW FROM SLOPE

NOTES:

USE MINIMUM 12 IN. DIAMETER COIR FIBER (COCONUT FIBER) WATTLE AND LENGTH OF 10 FT.

EXCAVATE A 1 TO 2 INCH TRENCH FOR WATTLE TO BE PLACED.

DO NOT PLACE WATTLE ON TOE OF SLOPE.

USE 2 FT. WOODEN STAKES WITH A 2 IN. BY 2 IN. NOMINAL CROSS SECTION.

INSTALL A MINIMUM OF 2 UPSLOPE STAKES AND 4 DOWNSLOPE STAKES AT AN ANGLE TO WEDGE WATTLE TO GROUND.

PROVIDE STAPLES MADE OF 0.125 IN. DIAMETER STEEL WIRE FORMED INTO A U SHAPE NOT LESS THAN 12" IN LENGTH.

INSTALL STAPLES APPROXIMATELY EVERY 1 LINEAR FOOT ON BOTH SIDES OF WATTLE AND AT EACH END TO SECURE IT TO THE SOIL.

WATTLE INSTALLATION CAN BE ON OUTSIDE OF THE SILT FENCE AS DIRECTED.

INSTALL TEMPORARY SILT FENCE IN ACCORDANCE WITH SECTION 1605 OF THE STANDARD SPECIFICATIONS.

INSET A

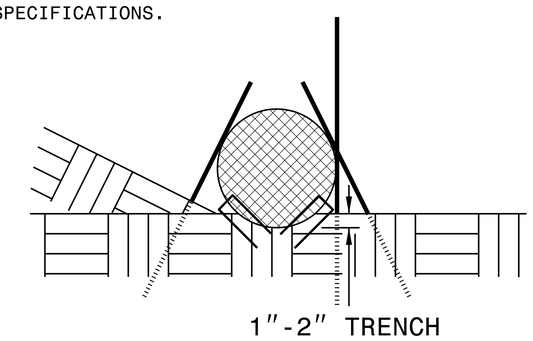

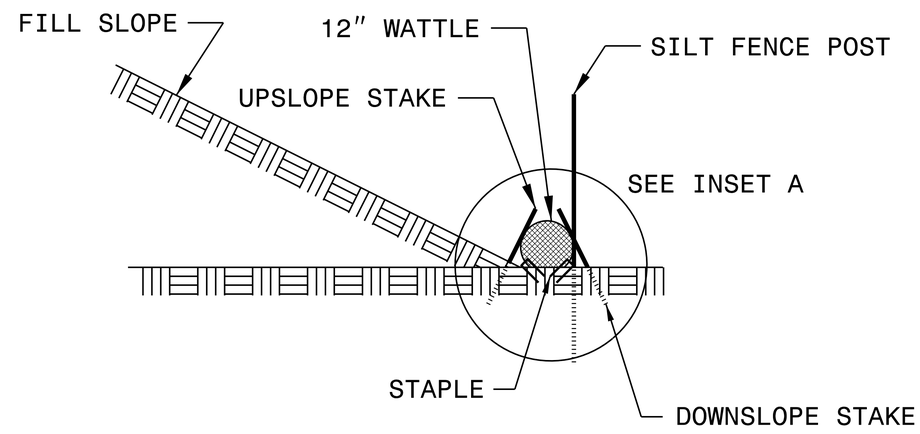

SIDE VIEW

PROJECT REFERENCE NO.	SHEET NO.
BP2.R019J	EC-3

DIVISION OF HIGHWAYS
STATE OF NORTH CAROLINA

SOIL STABILIZATION SUMMARY SHEET

MATTING FOR EROSION CONTROL

CONST SHEET NO.	LINE	FROM STATION	TO STATION	SIDE	ESTIMATE (SY)
4	-L-	13+50	15+50	LT	320
				SUBTOTAL	320
MISCELLANEOUS MATTING TO BE INSTALLED AS DIRECTED BY THE ENGINEER					0
				TOTAL	320
				SAY	350

PERMANENT SOIL REINFORCEMENT MAT

CONST SHEET NO.	LINE	FROM STATION	TO STATION	SIDE	ESTIMATE (SY)

PROJECT REFERENCE NO.	SHEET NO.
BP2.R019J	EC-3A

DIVISION OF HIGHWAYS
STATE OF NORTH CAROLINA

SOIL STABILIZATION TIMEFRAMES

SITE DESCRIPTION	STABILIZATION TIME	TIMEFRAME EXCEPTIONS
PERIMETER DIKES, SWALES, DITCHES AND SLOPES	7 DAYS	NONE
HIGH QUALITY WATER (HQW) ZONES	7 DAYS	NONE
SLOPES STEEPER THAN 3:1	7 DAYS	IF SLOPES ARE 10' OR LESS IN LENGTH AND ARE NOT STEEPER THAN 2:1, 14 DAYS ARE ALLOWED.
SLOPES 3:1 OR FLATTER	14 DAYS	7 DAYS FOR SLOPES GREATER THAN 50' IN LENGTH.
ALL OTHER AREAS WITH SLOPES FLATTER THAN 4:1	14 DAYS	NONE, EXCEPT FOR PERIMETERS AND HQW ZONES.

PROJECT REFERENCE NO.	SHEET NO.
BP2.R019J	EC-4/CONST 4

CLEARING AND GRUBBING
EROSION CONTROL FOR
CONSTRUCTION SHEET 4

NOTE:
PERIMETER EROSOIN CONTROL MEASURES SHALL BE INSTALLED DURING CLEARING AND GRUBBING PHASE.

NOTE:
PLACE TEMPORARY ROCK SILT CHECKS TYPE - B ON DITCHES AND TEMPORARY ROCK SILT CHECKS TYPE - A AT DRAINAGE OUTLETS

ENVIRONMENTALLY SENSITIVE AREA
SEE PROJECT SPECIAL PROVISIONS

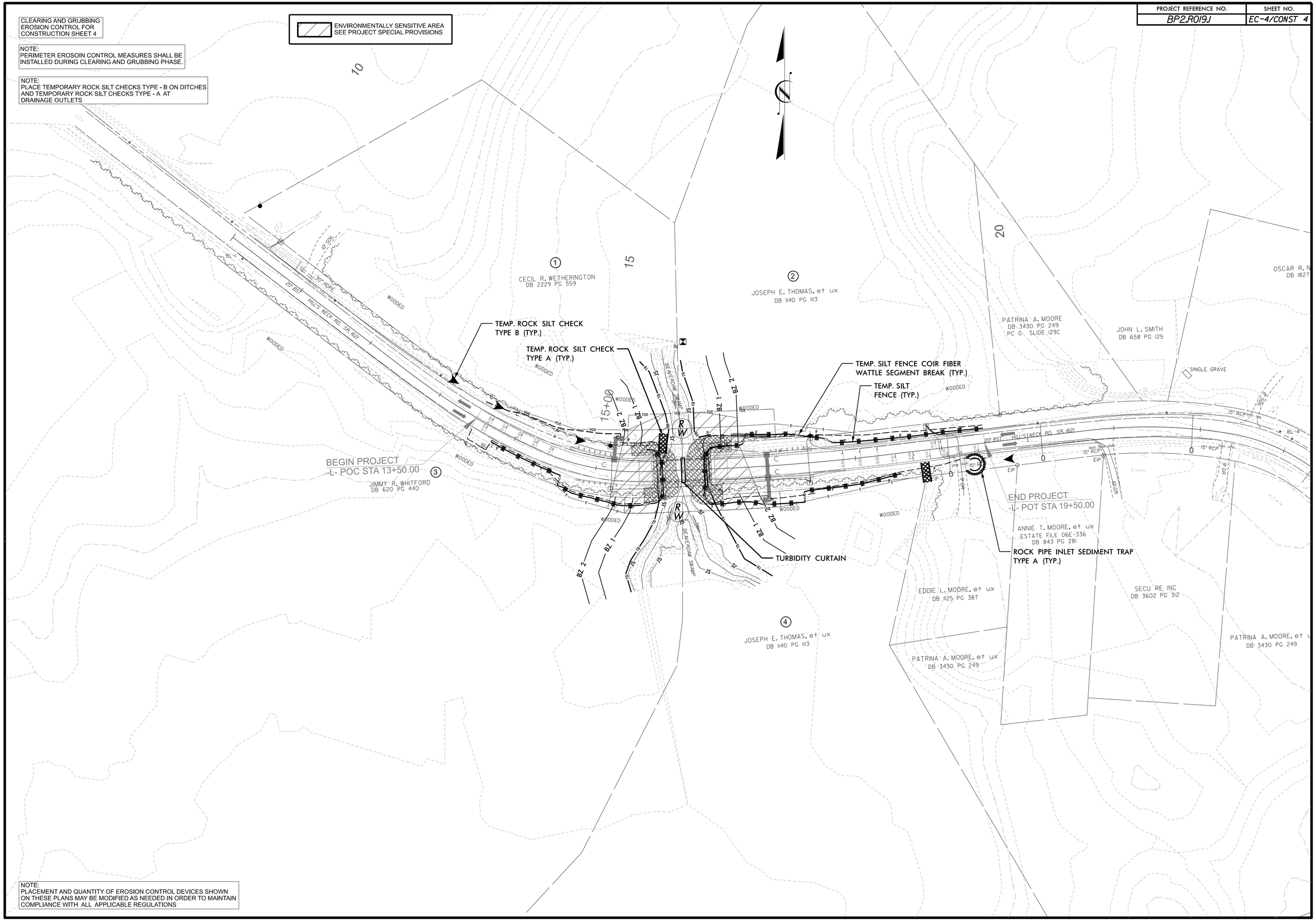

NOTE:
PLACEMENT AND QUANTITY OF EROSION CONTROL DEVICES SHOWN ON THESE PLANS MAY BE MODIFIED AS NEEDED IN ORDER TO MAINTAIN COMPLIANCE WITH ALL APPLICABLE REGULATIONS

PROJECT REFERENCE NO.	SHEET NO.
BP2.R019J	EC-5/CONST 4

FINAL GRADING
EROSION CONTROL FOR
CONSTRUCTION SHEET 4

NOTE:
UTILIZE TEMPORARY SEDIMENT BASIN OR SPECIAL STILLING BASIN(S) AS STILLING BASIN WHERE APPLICABLE

NOTE:
NYLON MESH CANNOT BE USED WITHIN 25 FEET OF THE TOP OF THE STREAM BANK AND OPEN WATERS

NOTE:
SANDBAGS SHOULD BE USED DURING THE INSTALLATION AND REMOVAL OF IMPERVIOUS DIKES

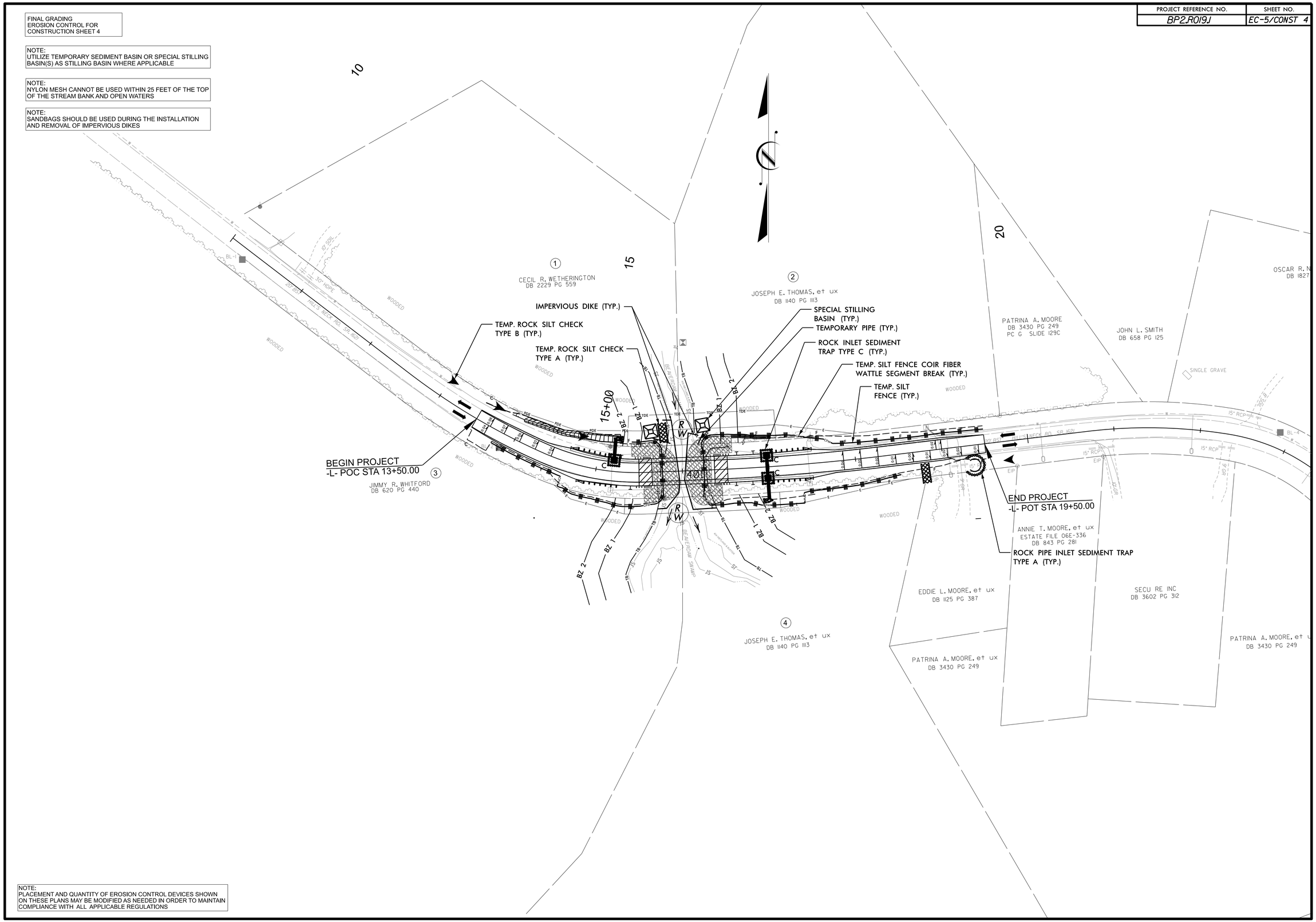

NOTE:
PLACEMENT AND QUANTITY OF EROSION CONTROL DEVICES SHOWN ON THESE PLANS MAY BE MODIFIED AS NEEDED IN ORDER TO MAINTAIN COMPLIANCE WITH ALL APPLICABLE REGULATIONS

STATE	STATE PROJECT REFERENCE NO.	SHEET NO.	TOTAL SHEETS
N.C.	BP2.R019.1	RF-1	7
STATE PROJ. NO.	F.A. PROJ. NO.	DESCRIPTION	

PLANTING DETAILS

SEEDLING / LINER BAREROOT PLANTING DETAIL

HEALING IN

1. Locate a healing-in site in a shady, well protected area.
2. Excavate a flat bottom trench 12 inches deep and provide drainage.

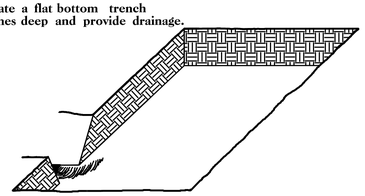

3. Backfill the trench with 2 inches well rotted sawdust. Place a 2 inch layer of well rotted sawdust at a sloping angle at one end of the trench.

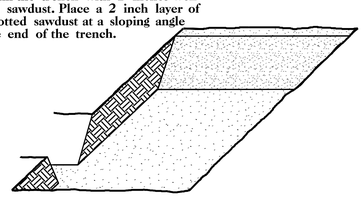

4. Place a single layer of plants against the sloping end so that the root collar is at ground level.

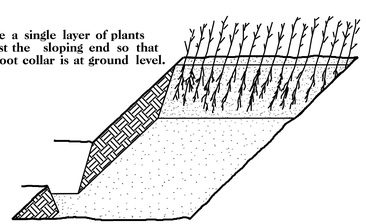

5. Place a 2 inch layer of well rotted sawdust over the roots maintaining a sloping angle.

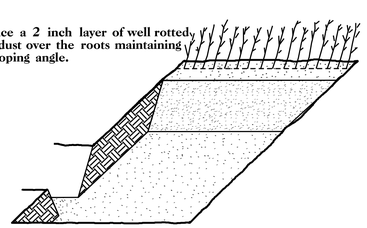

6. Repeat layers of plants and sawdust as necessary and water thoroughly.

DIBBLE PLANTING METHOD
USING THE KBC PLANTING BAR

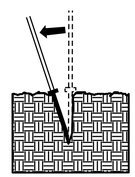

1. Insert planting bar as shown and pull handle toward planter.

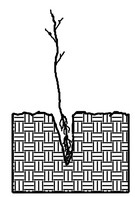

2. Remove planting bar and place seedling at correct depth.

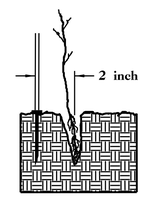

3. Insert planting bar 2 inches toward planter from seedling.

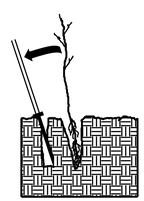

4. Pull handle of bar toward planter, firming soil at bottom.

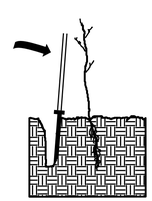

5. Push handle forward firming soil at top.

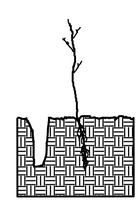

6. Leave compaction hole open. Water thoroughly.

PLANTING NOTES:

PLANTING BAG
During planting, seedlings shall be kept in a moist canvas bag or similar container to prevent the root systems from drying.

KBC PLANTING BAR
Planting bar shall have a blade with a triangular cross section, and shall be 12 inches long, 4 inches wide and 1 inch thick at center.

ROOT PRUNING
All seedlings shall be root pruned, if necessary, so that no roots extend more than 10 inches below the root collar.

REFORESTATION

☐ TREE REFORESTATION SHALL BE PLANTED 6 FT. TO 10 FT. ON CENTER, RANDOM SPACING, AVERAGING 8 FT. ON CENTER, APPROXIMATELY 680 PLANTS PER ACRE.

REFORESTATION

MIXTURE, TYPE, SIZE, AND FURNISH SHALL CONFORM TO THE FOLLOWING:

25%	LIRIODENDRON TULIPIFERA	TULIP POPLAR	12 in – 18 in BR
25%	PLATANUS OCCIDENTALIS	AMERICAN SYCAMORE	12 in – 18 in BR
25%	FRAXINUS PENNSYLVANICA	GREEN ASH	12 in – 18 in BR
25%	BETULA NIGRA	RIVER BIRCH	12 in – 18 in BR

REFORESTATION DETAIL SHEET

N.C.D.O.T. - ROADSIDE ENVIRONMENTAL UNIT

DocuSign Envelope ID: 0C4B1558-80C8-4037-9CEB-D75807BE0A3F

08/12/2021

PROJECT: BP2.R019.1

CONTRACT:

STATE OF NORTH CAROLINA
DIVISION OF HIGHWAYS

SIGNING PLAN

CRAVEN COUNTY

LOCATION: REPLACE BRIDGE NO. 240026 OVER BEAVER DAM SWAMP ON SR 1621 (HILLS NECK ROAD)

ROADWAY STANDARD DRAWING

THE FOLLOWING ROADWAY STANDARDS AS APPEAR IN "ROADWAY STANDARD DRAWINGS" - N.C. DEPARTMENT OF TRANSPORTATION - RALEIGH, N.C., DATED JANUARY 2018 ARE APPLICABLE TO THIS PROJECT AND BY REFERENCE HEREBY ARE CONSIDERED A PART OF THESE PLANS:

STD. NO.	TITLE
904.10	ORIENTATION OF GROUND MOUNTED SIGNS
904.50	MOUNTING OF TYPE 'D', 'E' AND 'F' SIGNS ON 'U' CHANNEL POSTS

SUMMARY OF QUANTITIES

ITEM NO.		ITEM DESCRIPTION	QUANTITY	UNIT
DESC. NO.	SECT. NO.			

GENERAL NOTES

. SIGNS FURNISHED AND INSTALLED BY STATE FORCES.

. CONFIRM IN WRITING AT LEAST 4 MONTHS IN ADVANCE, THE ACTUAL DATE THE DEPARTMENT FURNISHED SIGNS WILL BE REQUIRED.

. IF REMOVAL OR RELOCATION OF SIGNS ON PRIVATE STREET (NON-STATE MAINTAINED) IS REQUIRED DUE TO CONSTRUCTION, THE CONTRACTOR SHALL INFORM THE ENGINEER. THE WORK WILL BE COMPLETED BY OTHERS.

. WHEN NOT STATIONED OR DIMENSIONED ON PLANS, ALL 'E' AND 'F' SIGNS SHALL BE FIELD LOCATED BY THE ENGINEER.

. ALL EXISTING SIGNS ON "U" CHANNEL POST WITHIN THE PROJECT LIMITS SHALL BE REMOVED AND DISPOSED OF UNLESS OTHERWISE NOTED ON PLANS.

. WHEN EXISTING SIGNS ARE REMOVED AND INSTALLED ON NEW SUPPORTS, THE RE-ERECTION SHALL IMMEDIATELY FOLLOW THE REMOVAL.

. THE BACKGROUND FOR TYPE E & F SIGNS SHALL BE TYPE C REFLECTIVE SHEETING.

INDEX

SHEET NO.	DESCRIPTION
SIGN-1	TITLE SHEET
SIGN-2	TYPE E SIGNS
SIGN-3	EXISTING AND PROPOSED SIGN

PLAN PREPARED BY: CDM SMITH, INC.

ADAM M. CONRAD, P. E. — PROJECT MANAGER

RYAN DEMUYNCK, EI — PROJECT DESIGN ENGINEER

CDM Smith
CDM Smith Inc.
5400 Glenwood Avenue
Suite 400
Raleigh, NC 27612-3228
NC COA No. F-1255

PLAN REVIEWED BY: N.C.D.O.T. DIVISION 2

STEVEN HAMILTON, P.E. — DIVISION TRAFFIC ENGINEER

CADMUS CAPEHART, P.E. — DIVISION CONSTRUCTION ENGINEER

STATE OF NORTH CAROLINA DEPARTMENT OF TRANSPORTATION

BP2.R019.1

SIGN 1

ROADWAY DESIGN ENGINEER

NORTH CAROLINA PROFESSIONAL SEAL 043767 ENGINEER ADAM M. CONRAD
8/24/2021

DocuSigned by:
ADAM M. CONRAD
6DDC2F1A4F0D4AD...

DOCUMENT NOT CONSIDERED FINAL UNLESS ALL SIGNATURES COMPLETED

STATE OF NORTH CAROLINA

ROADWAY DESIGN UNIT

PREPARED BY

CDM Smith
CDM Smith Inc.
5400 Glenwood Avenue
Suite 400
Raleigh, NC 27612-3228
NC COA No. F-1255

DocuSign Envelope ID: 0C4B1558-80C8-4037-9CEB-D75807BE0A3F

5/26/20

401 QUANTITY REQ'D 4

W1–8L
18'' X 24''

ONE "U" POST PER SIGN

402 QUANTITY REQ'D 1

W1–8R
18'' X 24''

ONE "U" POST PER SIGN

403 QUANTITY REQ'D 3

W1–8R
18'' X 24''

MOUNT BEHIND SIGN 401
IN 3 INSTALLATIONS

404 QUANTITY REQ'D 1

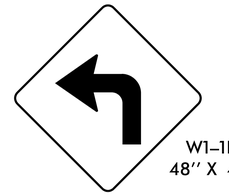

W1–1L
48'' X 48''

TWO "U" POSTS PER SIGN

405 QUANTITY REQ'D 1

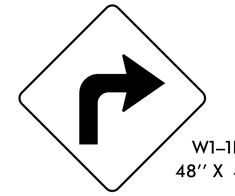

W1–1R
48'' X 48''

TWO "U" POSTS PER SIGN

406 QUANTITY REQ'D 2

W13–1
24'' X 24''

MOUNT BELOW SIGNS 404 & 405
IN 2 INSTALLATIONS

TYPE E SIGNS

BP2.R019.1

SIGN	2

ROADWAY DESIGN ENGINEER

NORTH CAROLINA PROFESSIONAL SEAL 043767 ENGINEER

3/24/2022

DocuSigned by:
Adam M. Conrad
0D0C7F1B7D94AD...

DOCUMENT NOT CONSIDERED FINAL UNLESS ALL SIGNATURES COMPLETED

STATE OF NORTH CAROLINA

ROADWAY DESIGN UNIT

PREPARED BY

CDM Smith

CDM Smith Inc.
5400 Glenwood Avenue
Suite 400
Raleigh, NC 27612-3228
NC COA No. F-1255

DocuSign Envelope ID: 0C4B1558-80C8-4037-9CEB-D75807BE0A3F

5/26/20

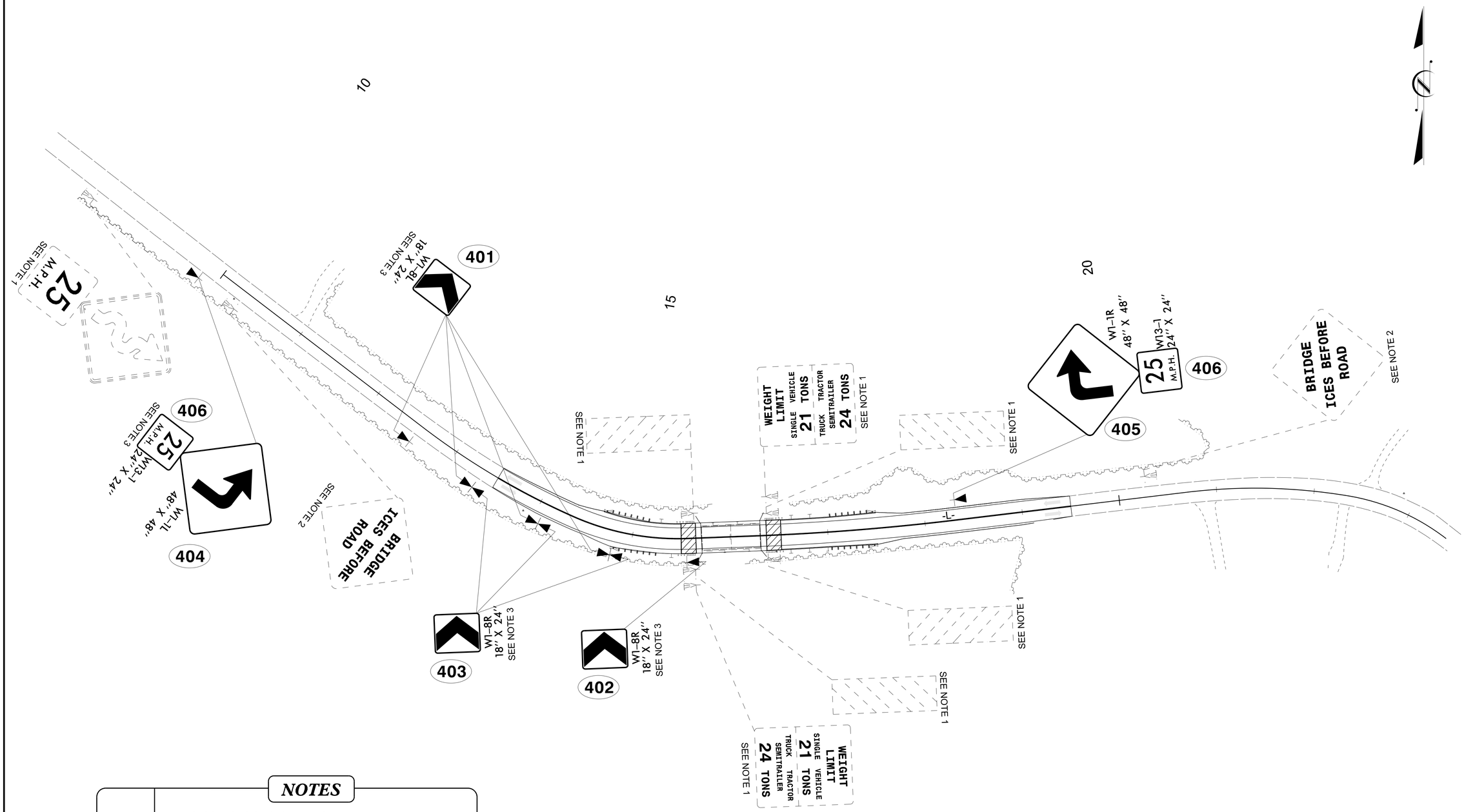

NOTES

1 DISPOSAL OF SIGN SYSTEM, U-CHANNEL
2 RETAIN SIGN SYSTEM, U-CHANNEL
3 SIGN ERECTION, TYPE D, E, AND F

BP2.R019.1

SIGN	3

ROADWAY DESIGN ENGINEER

NORTH CAROLINA PROFESSIONAL SEAL 043767 ENGINEER

9/24/2022

DocuSigned by:
Adam H. Conrad
C0DC5F7A8F0B4AD...

DOCUMENT NOT CONSIDERED FINAL UNLESS ALL SIGNATURES COMPLETED

STATE OF NORTH CAROLINA

ROADWAY DESIGN UNIT

PREPARED BY

CDM Smith

CDM Smith Inc.
5400 Glenwood Avenue
Suite 400
Raleigh, NC 27612-3228
NC COA No. F-1255

EXISTING AND PROPOSED SIGNS

T.I.P. NO.	SHEET NO.
BP2.R019	UC–1

TIP PROJECT: BP2.R019

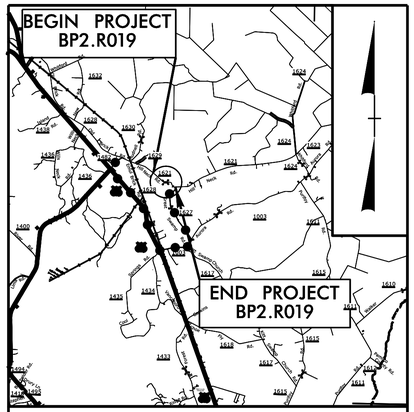

VICINITY MAP
DETOUR ROUTE N.T.S.

STATE OF NORTH CAROLINA
DIVISION OF HIGHWAYS

UTILITY CONSTRUCTION PLANS
CRAVEN COUNTY

LOCATION: REPLACE BRIDGE NO. 240026 OVER BEAVER DAM SWAMP ON SR 1621 (HILLS NECK ROAD)

TYPE OF WORK: WATER LINE RELOCATION

RDY–4
UC–4

TO SR 1628

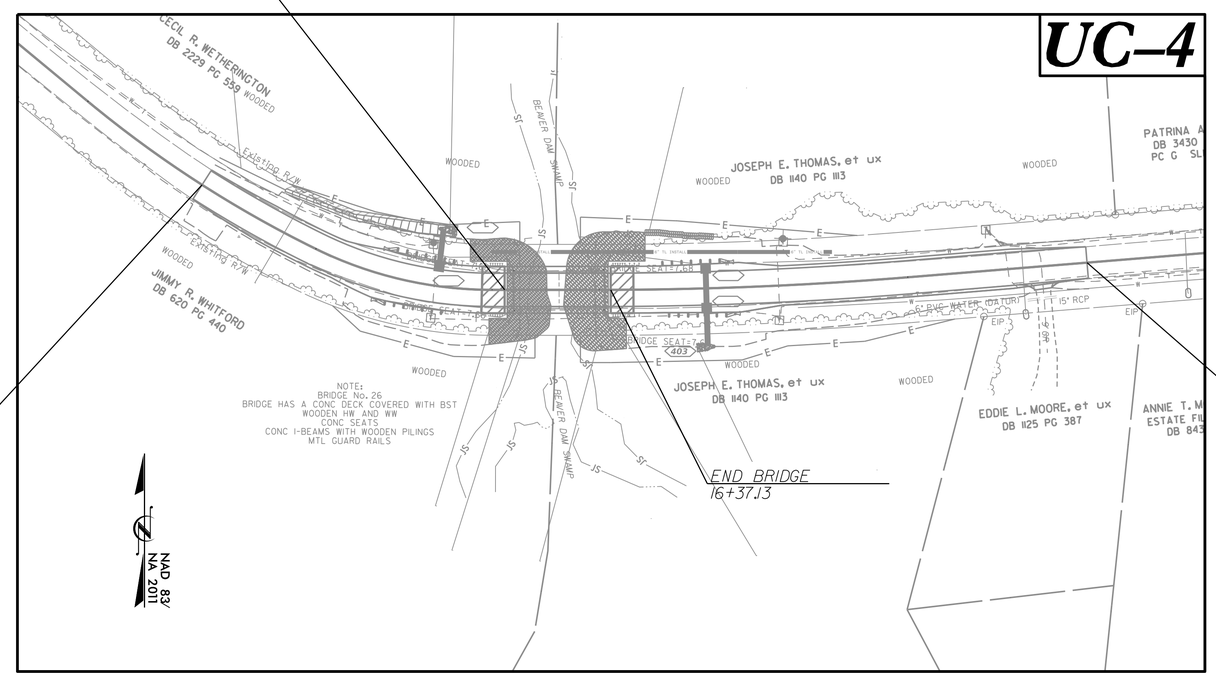

TO SR 1623

100% PLANS

PRELIMINARY PLANS
DO NOT USE FOR CONSTRUCTION

DOCUMENT NOT CONSIDERED FINAL UNTIL ALL SIGNATURES ARE COMPLETED

GRAPHIC SCALES

50 25 0 50 100
PLANS

50 25 0 50 100
PROFILE (HORIZONTAL)

10 5 0 10 20
PROFILE (VERTICAL)

INDEX OF SHEETS

SHEET NO.:	DESCRIPTION:
UC–1	TITLE SHEET
UC–2	UTILITY SYMBOLOGY
UC–3	NOTES
UC–3A	DETAILS
UC–4	UTILITY PLAN /PROFILE SHEET

WATER AND SEWER OWNERS ON PROJECT

(A) WATER – CRAVEN COUNTY

(B) SEWER – N/A

PREPARED IN THE OFFICE OF

Weston & Sampson
WSE of North Carolina, PC
598 East Chatham Street Suite 137
Phone: 919.297.0220
NC License: C-4647
Cary, NC 27511
Fax: 919.297.0221

FOR CDM Smith
CDM Smith Inc.
5400 Glenwood Avenue
Suite 400
Raleigh, NC 27612-3228
NC COA No. F-1255

KEVIN ZDEB, PE — PROJECT ENGINEER
AARON COLLINS, EI — PROJECT DESIGN ENGINEER

SEAL

NORTH CAROLINA PROFESSIONAL SEAL 27611 ENGINEER KEVIN C. ZDEB

DIVISION OF HIGHWAYS
HIGHWAY DIVISION 2
PROJECT DEVELOPMENT UNIT
1037 W.H. SMITH BLVD
GREENVILLE NC 27835
PHONE (252) 775-6100
FAX (252) 830-3352

PRESTON HUNTER, PE — DIVISION ENGINEER
JEFF CABANISS, PE — DIVISION PROJECT DEVELOPMENT ENGINEER
MICHAEL AMAN, PE — DIV. BRIDGE PROGRAM MGR
DAVID KRAMER — DIVISION UTILITY ENGINEER

09/08/99
3/25/2022 3:14:24 PM
P:\NC\CDM Smith\EN021-####_BP2.R019\Utilities\Engineering\UC\Proj\BP2R019_ut_UC-01_tsh_v8i.dgn

PROJECT REFERENCE NO.	SHEET NO.
BP2.R019	UC-2

STATE OF NORTH CAROLINA
DIVISION OF HIGHWAYS

UTILITIES PLAN SHEET SYMBOLS

PROPOSED WATER SYMBOLS

- Water Line (Sized as Shown) — 12" WL
- 11¼ Degree Bend
- 22½ Degree Bend
- 45 Degree Bend
- 90 Degree Bend
- Plug
- Tee
- Cross
- Reducer
- Gate Valve — GV
- Butterfly Valve — BV
- Tapping Valve — TGV
- Line Stop — LS
- Line Stop with Bypass — LS/BP
- Blow Off — BO
- Fire Hydrant — PFH
- Relocate Fire Hydrant — RFH
- Remove Fire Hydrant — REM FH
- Water Meter — PWM
- Relocate Water Meter — RWM
- Remove Water Meter — REM WM
- Water Pump Station — PS(W)
- RPZ Backflow Preventer — PRPZ
- DCV Backflow Preventer — PBFP
- Relocate RPZ Backflow Preventer — RRPZ
- Relocate DCV Backflow Preventer — RBFP

PROPOSED SEWER SYMBOLS

- Gravity Sewer Line (Sized as Shown) — 12" SS
- Force Main Sewer Line (Sized as Shown) — 12" FSS
- Manhole (Sized per Note)
- Sewer Pump Station — PS(SS)

PROPOSED MISCELLANOUS UTILITIES SYMBOLS

- Power Pole
- Telephone Pole
- Joint Use Pole
- Telephone Pedestal — TEL PED
- Utility Line by Others (Type as Shown) — PROP O/H POW LINES
- Trenchless Installation — 12" TL INSTALL
- Encasement by Open Cut — 24" ENCAS BY OC
- Encasement — 24" ENCASEMENT
- Thrust Block
- Air Release Valve — AR
- Utility Vault — UV
- Concrete Pier — CP
- Steel Pier — SP
- Plan Note — NOTE
- Pay Item Note — PAY ITEM

EXISTING UTILITIES SYMBOLS

- Power Pole
- Telephone Pole
- Joint Use Pole
- Utility Pole
- Utility Pole with Base
- H-Frame Pole
- Power Transmission Line Tower
- Water Manhole
- Power Manhole
- Telephone Manhole
- Sanitary Sewer Manhole
- Hand Hole for Cable
- Power Transformer
- Telephone Pedestal
- CATV Pedestal
- Gas Valve
- Gas Meter
- Located Miscellaneous Utility Object
- Abandoned According to Utility Records — AATUR
- End of Information — E.O.I.
- *Underground Power Line — P
- *Underground Telephone Cable — T
- *Underground Telephone Conduit — TC
- *Underground Fiber Optics Telephone Cable — T FO
- *Underground TV Cable — TV
- *Underground Fiber Optics TV Cable — TV FO
- *Underground Gas Pipeline — G
- Aboveground Gas Pipeline — A/G Gas
- *Underground Water Line — W
- Aboveground Water Line — A/G Water
- *Underground Gravity Sanitary Sewer Line — SS
- Aboveground Gravity Sanitary Sewer Line — A/G Sanitary Sewer
- *Underground SS Forced Main Line — FSS
- Underground Unknown Utility Line — ?UTL
- SUE Test Hole
- Water Meter
- Water Valve
- Fire Hydrant
- Sanitary Sewer Cleanout

*For Existing Utilities

- Utility Line Drawn from Record (Type as Shown) — W
- Designated Utility Line (Type as Shown) — W

5/14/99
3/26/2002 8:36:18 AM
B:\UC\ENG21-____BP2.R019\Utilities\Engineering\UC\Proj\BP2R019_ut_UC-02_sym.dgn
Smith

Weston & Sampson
WSE of North Carolina, PC
598 East Chatham Street Suite 137 Cary, NC 27511
Phone: 919.297.0220 Fax: 919.297.0221
NC License: C-4647

100% PLANS

PRELIMINARY PLANS
DO NOT USE FOR CONSTRUCTION

PROJECT REFERENCE NO.	SHEET NO.
BP2.R019	UC-3
DESIGNED BY: KCZ	
DRAWN BY: KCZ	
CHECKED BY: KSH	
APPROVED BY: KCZ	
REVISED:	
NORTH CAROLINA DEPARTMENT OF TRANSPORTATION	
UTILITIES ENGINEERING SEC. PHONE:(919)707-6690 FAX:(919)250-4151	UTILITY CONSTRUCTION PLANS ONLY

NORTH CAROLINA PROFESSIONAL SEAL 27611 ENGINEER KEVIN C. ZOEB

UTILITY CONSTRUCTION

DOCUMENT NOT CONSIDERED FINAL UNTIL ALL SIGNATURES ARE COMPLETED

UTILITY CONSTRUCTION

GENERAL NOTES:

1. THE PROPOSED UTILITY CONSTRUCTION SHALL MEET THE APPLICABLE REQUIREMENTS OF THE NC DEPARTMENT OF TRANSPORTATION'S "STANDARD SPECIFICATIONS FOR ROADS AND STRUCTURES" DATED JANUARY 2018.

2. THE EXISTING WATER LINE UTILITIES BELONG TO CRAVEN COUNTY.

   CONTACT: ELLIOT THOMAS
   PHONE: 252-636-6615

3. ALL WATER LINES TO BE INSTALLED WITHIN COMPLIANCE OF THE RULES AND REGULATIONS OF THE NORTH CAROLINA DEPARTMENT OF ENVIRONMENTAL AND NATURAL RESOURCES, DIVISION OF ENVIRONMENTAL HEALTH.

4. THE UTILITY OWNER OWNS THE EXISTING UTILITY FACILITIES AND WILL OWN THE NEW UTILITY FACILITIES AFTER ACCEPTANCE BY THE DEPARTMENT. THE DEPARTMENT OWNS THE CONSTRUCTION CONTRACT AND HAS ADMINISTRATIVE AUTHORITY. COMMUNICATIONS AND DECISIONS BETWEEN THE CONTRACTOR AND UTILITY OWNER ARE NOT BINDING UPON THE DEPARTMENT OR THIS CONTRACT UNLESS AUTHORIZED BY THE ENGINEER. AGREEMENTS BETWEEN THE UTILITY OWNER AND CONTRACTOR FOR THE WORK THAT IS NOT PART OF THIS CONTRACT OR IS SECONDARY TO THIS CONTRACT ARE ALLOWED, BUT ARE NOT BINDING UPON THE DEPARTMENT.

5. PROVIDE ACCESS FOR THE DEPARTMENT PERSONNEL AND THE OWNER'S REPRESENTATIVES TO ALL PHASES OF CONSTRUCTION. NOTIFY DEPARTMENT PERSONNEL AND THE UTILITY OWNER TWO WEEKS PRIOR TO COMMENCEMENT OF ANY WORK AND ONE WEEK PRIOR TO SERVICE INTERRUPTION. KEEP UTILITY OWNERS' REPRESENTATIVES INFORMED OF WORK PROGRESS AND PROVIDE OPPORTUNITY FOR INSPECTION OF CONSTRUCTION AND TESTING.

6. THE PLANS DEPICT THE BEST AVAILABLE INFORMATION FOR THE LOCATION, SIZE, AND TYPE OF MATERIAL FOR ALL EXISTING UTILITIES. MAKE INVESTIGATIONS FOR DETERMINING THE EXACT LOCATION, SIZE, AND TYPE MATERIAL OF THE EXISTING FACILITIES AS NECESSARY FOR THE CONSTRUCTION OF THE PROPOSED UTILITIES AND FOR AVOIDING DAMAGE TO EXISTING FACILITIES. REPAIR ANY DAMAGE INCURRED TO EXISTING FACILITIES TO THE ORIGINAL OR BETTER CONDITION AT NO ADDITONAL COST TO THE DEPARTMENT.

7. MAKE FINAL CONNECTIONS OF THE NEW WORK TO THE EXISTING SYSTEM WHERE INDICATED ON THE PLANS, AS REQUIRED TO FIT THE ACTUAL CONDITIONS, OR AS DIRECTED.

8. MAKE CONNECTIONS BETWEEN EXISTING AND PROPOSED UTILITIES AT TIMES MOST CONVENIENT TO THE PUBLIC, WITHOUT ENDANGERING THE UTILITY SERVICE, AND IN ACCORDANCE WITH THE UTILITY OWNER'S REQUIREMENTS. MAKE CONNECTIONS ON WEEKENDS, AT NIGHT, AND ON HOLIDAYS IF NECESSARY.

9. ALL UTILITY MATERIALS SHALL BE APPROVED PRIOR TO DELIVERY TO THE PROJECT. SEE 1500-7, " SUBMITTALS AND RECORDS" IN SECTION 1500 OF THE STANDARD SPECIFICATIONS.

PROJECT NOTES:

1. THERE ARE NO KNOWN SANITARY SEWER LINES WITHIN THE PROJECT LIMITS.

2. CONTRACTOR'S ATTENTION IS DIRECTED TO SECTIONS 102, 107, AND 1550 OF THE STANDARD SPECIFICATIONS CONCERNING TRENCHLESS INSTALLATION. IT IS CONTRACTOR'S RESPONSIBILITY TO HAVE BORE DESIGNED AND SEALED BY A LICENSED NORTH CAROLINA PROFESSIONAL ENGINEER. NO DAMAGE IS ALLOWED TO RIVER, STREAM, CREEK, WETLANDS, OR BUFFER ZONES.

3. PVC PIPE MANUFACTURED MORE THAN TWELVE (12) MONTHS BEFORE THE INSTALLATION DATE WILL NOT BE ACCEPTED.

4. IN THE EVENT THAT EXCESSIVE GROUNDWATER OR SPRINGS ARE ENCOUNTERED DURING PIPE CONSTRUCTION, THE CONTRACTOR SHALL EMPLOY ALL METHODS NECESSARY TO KEEP THE TRENCHES DRY AS DIRECTED BY THE ENGINEER.

5. ALL PROPOSED FITTINGS (BENDS, TEES, CROSSES, REDUCERS, PLUGS, ETC.) SHALL BE ADEQUATELY RESTRAINED BY UTILIZING TWO (2) FORMS OF PIPE RESTRAINT. PIPE RESTRAINT METHODS SHALL BE RESTRAINED JOINT CONSTRUCTION AND CONCRETE THRUST BLOCKS, OR AS DIRECTED BY THE ENGINEER AND APPROVED BY THE UTILITY OWNER. RESTRAINED JOINT FITTINGS SHALL BE OF THE SAME MANUFACTURER AS THE RESTRAINED JOINT DUCTILE IRON PIPE.

6. PROPOSED OPEN TRENCH WATER LINE SHALL BE 6" DUCTILE IRON PIPE, CLASS 350, RESTRAINED JOINT PIPE; OR 6" PVC C-900 DR-18 PIPE THAT CONFORMS TO NSF-61.

7. PROPOSED WATER LINE FOR DIRECTIONAL DRILLING SHALL BE 6" FUSIBLE PVC C-900 DR-18 PIPE THAT CONFORMS TO NSF-61.

8. ALL WATER LINE FITTINGS, 4-INCHES THROUGH 12-INCHES IN DIAMETER, SHALL BE DUCTILE IRON.

9. ALL VALVES ON THE WATER LINE SHALL BE GATE VALVES.

10. VALVES SHALL HAVE RESTRAINED JOINT CONNECTIONS OR USE MECHANICAL JOINT RESTRAINTS.

11. CONTRACTOR SHALL NOT OPERATE ANY VALVES ON THE EXISTING WATER SYSTEM. CONTRACTOR SHALL CONTACT THE UTILITY OWNER TO CONDUCT STRATEGIC OPERATION OF EXISTING VALVES FOR SERVICE INTERRUPTION IN ORDER TO PERFORM SPECIFIC WORK.

12. ALL TESTING AND DISINFECTION SHALL BE CONDUCTED IN THE PRESENCE OF THE ENGINEER.

13. FINAL CONNECTIONS TO EXISTING FACILITIES SHALL BE WITNESSED BY UTILITY OWNER'S REPRESENTATIVE.

14. WATER LINE SHALL NOT BE OUT OF SERVICE FOR MORE THAN FOUR (4) HOURS. IF A PLANNED OUTAGE IS EXPECTED TO BE LONGER THAN 4 HOURS, THEN THE CONTRACTOR SHALL INSTALL LINE STOPS WITH BYPASS AT EACH OF THE WATER LINE TIE-IN LOCATIONS AS DIRECTED BY THE ENGINEER IN ORDER TO MAINTAIN SERVICE.

8/17/99
3/22/2022
R:\NCCDM_Smith\ENG2\-####_BP2.R019\Utilities\Engineering\UC\Proj\BP2R019_ut_UC-03_nte.dgn
10:36:25 AM

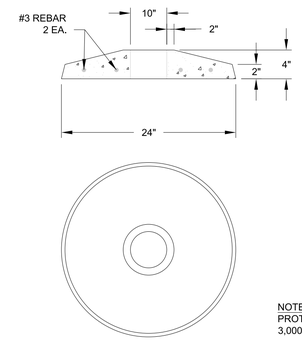

NOTE:
PROTECTOR RING SHALL BE
3,000 P.S.I. CONCRETE.

CONCRETE PROTECTOR RING

NOT TO SCALE

PIPE BEDDING DETAIL

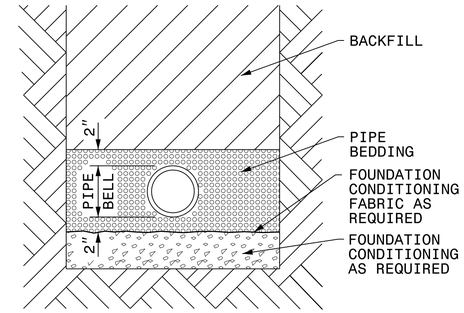

PLACE FOUNDATION CONDITIONING MATERIAL BELOW BEDDING IF REQUIRED, AS DIRECTED BY ENGINEER.
PIPE BEDDED IN SELECT MATERIAL, CLASS II (TYPE 1) OR CLASS III.
TRENCH BACKFILLED IN LOOSE 6″ LAYERS COMPACTED TO TOP OF TRENCH USING LOCAL EXCAVATED MATERIAL IF APPROVED BY THE ENGINEER, OR SELECT MATERIAL.
ALL MATERIAL SHALL BE FREE OF ROCKS, FOREIGN MATERIAL, AND FROZEN EARTH.
COMPACTION SHALL BE TO APPROXIMATELY 95% DENSITY IN ACCORDANCE WITH AASHTO T-99 AS MODIFIED BY THE DEPARTMENT OF TRANSPORTATION.

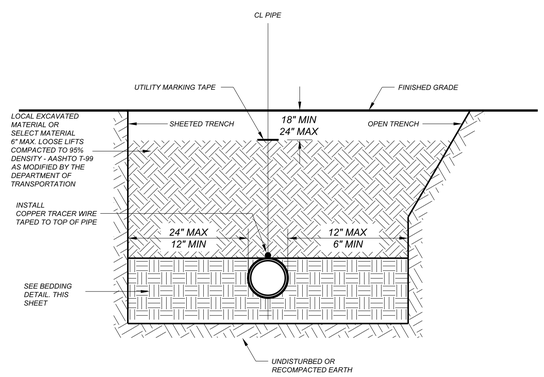

NOTES:
1. ALL SHORING & TRENCHING SHALL COMPLY WITH OSHA SAFETY STANDARDS FOR THE CONSTRUCTION INDUSTRY.
2. BELL HOLES NOT SHOWN.
3. ALL BACKFILL MATERIAL SHALL BE FREE OF ROCKS, FOREIGN MATERIAL, AND FROZEN EARTH.

GENERAL TRENCH DETAIL

NTS

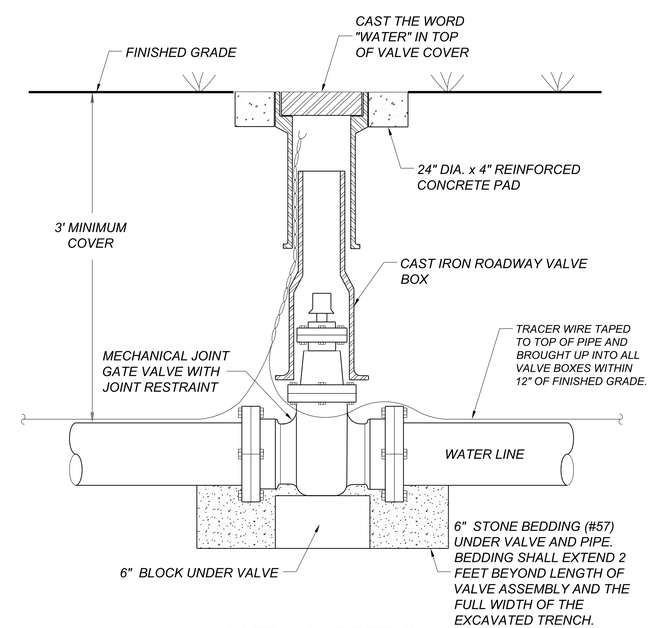

GATE VALVE DETAIL

NOT TO SCALE

PROJECT REFERENCE NO.	SHEET NO.
BP2.R019	UC-3A
DESIGNED BY: AJC	
DRAWN BY: AJC	
CHECKED BY: KSH	
APPROVED BY: KCZ	
REVISED:	
NORTH CAROLINA DEPARTMENT OF TRANSPORTATION	
UTILITIES ENGINEERING SEC. PHONE:(919)707-6690 FAX:(919)250-4151	UTILITY CONSTRUCTION PLANS ONLY

NORTH CAROLINA PROFESSIONAL SEAL 27611 ENGINEER KEVIN C. ZOEB

Weston & Sampson
WSE of North Carolina, PC
598 East Chatham Street Suite 137
Phone: 919.297.0220
NC License: C-4647
Cary, NC 27511
Fax: 919.297.0221

UTILITY CONSTRUCTION

DOCUMENT NOT CONSIDERED FINAL UNTIL ALL SIGNATURES ARE COMPLETED

100% PLANS

PRELIMINARY PLANS
DO NOT USE FOR CONSTRUCTION

WATER LINE DETAILS

8/17/99
3/25/2022
8:10:01 AM
BY: CDM
Smith\ENG2\-####_BP2.R019\Utilities\Engineering\UC\Proj\BP2R019_ut_UC-03A_dtl.dgn

PROJECT REFERENCE NO.	SHEET NO.
BP2.R019	UC-3B
DESIGNED BY: AJC	
DRAWN BY: AJC	
CHECKED BY: KSH	
APPROVED BY: KCZ	
REVISED:	
NORTH CAROLINA DEPARTMENT OF TRANSPORTATION	
UTILITIES ENGINEERING SEC. PHONE:(919)707-6690 FAX:(919)250-4151	UTILITY CONSTRUCTION PLANS ONLY

NORTH CAROLINA PROFESSIONAL SEAL 27611 ENGINEER KEVIN C. ZOEB

Weston & Sampson
WSE of North Carolina, PC
598 East Chatham Street Suite 137
Phone: 919.297.0220
NC License: C-4647
Cary, NC 27511
Fax: 919.297.0221

UTILITY CONSTRUCTION

DOCUMENT NOT CONSIDERED FINAL UNTIL ALL SIGNATURES ARE COMPLETED

100% PLANS

PRELIMINARY PLANS
DO NOT USE FOR CONSTRUCTION

RESTRAINED JOINT DESIGN TABLE FOR DUCTILE IRON POLYETHYLENE WRAPPED PIPE

FITTING	REQUIRED RESTRAINED LENGTH (FT) OF PVC PIPE BY DEPTH OF COVER							
HORIZONTAL BENDS	3FT	4FT	5FT	6FT	7FT	8FT	9FT	10FT
6 INCH - 11.25 DEG	4	3	3	3	2	2	2	2
6 INCH - 22.5 DEG	7	6	5	5	4	4	4	3
6 INCH - 45 DEG	14	12	11	10	9	8	7	7
VERTICAL DOWN BENDS	3FT	4FT	5FT	6FT	7FT	8FT	9FT	10FT
6 INCH - 11.25 DEG	16	12	10	9	7	7	6	5
6 INCH - 22.5 DEG	31	24	20	17	15	13	12	10
6 INCH - 45 DEG	65	50	41	34	30	26	23	21
VERTICAL UP BENDS	3FT	4FT	5FT	6FT	7FT	8FT	9FT	10FT
6 INCH - 11.25 DEG	-	3	3	3	2	2	2	2
6 INCH - 22.5 DEG	-	6	5	5	4	4	4	3
6 INCH - 45 DEG	-	12	11	10	9	8	7	7

ASSUMPTIONS:
SAFETY FACTOR = 1.5
DESIGN PRESSURE = 200 PSI (TEST PRESSURE)
LAYING CONDITION = TYPE 4
SOIL DESIGNATION: CL (BROWN CLAY)

NOTES:
1. RESTRAINED LENGTH IS MEASURED FROM THE CENTER OF THE BEND AS FOLLOWS:
   A. HORIZONTAL AND VERTICAL BENDS: ALONG EACH SIDE OF THE BEND.
   B. HORIZONTAL AND VERTICAL BENDS - OFFSET OR COMBINED: ALONG THE OUTER SIDE OF EACH BEND. ALL PIPE BETWEEN THE TWO BENDS SHALL BE RESTRAINED JOINT WHEN:
      1) THE DISTANCE BETWEEN THEM IS EQUAL THE REQUIRED LENGTH
      2) THE DISTANCE BETWEEN THEM LESS THAN THE REQUIRED LENGTH
      3) AS NOTED ON THE PLANS
      4) AS DIRECTED BY THE ENGINEER

RESTRAINED JOINT DESIGN TABLE FOR PVC PIPE

FITTING	REQUIRED RESTRAINED LENGTH (FT) OF PVC PIPE BY DEPTH OF COVER							
HORIZONTAL BENDS	3FT	4FT	5FT	6FT	7FT	8FT	9FT	10FT
6 INCH - 11.25 DEG	4	3	3	3	2	2	2	2
6 INCH - 22.5 DEG	7	6	5	5	4	4	4	4
6 INCH - 45 DEG	13	12	10	9	9	8	7	7
VERTICAL DOWN BENDS	3FT	4FT	5FT	6FT	7FT	8FT	9FT	10FT
6 INCH - 11.25 DEG	11	10	9	8	7	7	6	6
6 INCH - 22.5 DEG	23	20	18	16	14	13	12	11
6 INCH - 45 DEG	47	41	36	32	29	27	25	23
VERTICAL UP BENDS	3FT	4FT	5FT	6FT	7FT	8FT	9FT	10FT
6 INCH - 11.25 DEG	-	3	3	3	2	2	2	2
6 INCH - 22.5 DEG	-	6	5	5	4	4	4	4
6 INCH - 45 DEG	-	12	10	9	9	8	7	7

ASSUMPTIONS:
SAFETY FACTOR = 1.5
DESIGN PRESSURE = 200 PSI (TEST PRESSURE)
LAYING CONDITION = TYPE 4
SOIL DESIGNATION: CL (BROWN CLAY)

NOTES:
1. RESTRAINED LENGTH IS MEASURED FROM THE CENTER OF THE BEND AS FOLLOWS:
   A. HORIZONTAL AND VERTICAL BENDS: ALONG EACH SIDE OF THE BEND.
   B. HORIZONTAL AND VERTICAL BENDS - OFFSET OR COMBINED: ALONG THE OUTER SIDE OF EACH BEND. ALL PIPE BETWEEN THE TWO BENDS SHALL BE RESTRAINED JOINT WHEN:
      1) THE DISTANCE BETWEEN THEM IS EQUAL THE REQUIRED LENGTH
      2) THE DISTANCE BETWEEN THEM LESS THAN THE REQUIRED LENGTH
      3) AS NOTED ON THE PLANS
      4) AS DIRECTED BY the ENGINEER

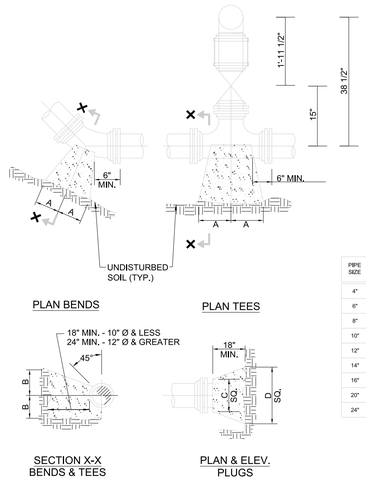

PIPE SIZE	90° BEND		45° BEND		22 1/2° BEND		11 1/4° BEND		TEE		PLUG	
	A	B	A	B	A	B	A	B	A	B	C	D
4"	8"	12"	8"	8"	6"	6"	6"	6"	8"	9"	10"	16"
6"	10"	12"	8"	10"	8"	8"	8"	8"	10"	10"	12"	18"
8"	15"	13"	10"	10"	8"	8"	8"	8"	10"	12"	12"	24"
10"	16"	14"	10"	12"	6"	10"	6"	10"	11"	14"	14"	25"
12"	20"	16"	12"	14"	8"	12"	8"	12"	14"	16"	16"	30"
14"	22"	18"	14"	16"	10"	14"	10"	14"	16"	18"	18"	34"
16"	26"	20"	16"	18"	12"	16"	12"	16"	18"	20"	20"	36"
20"	36"	26"	24"	18"	16"	13"	12"	9"	19"	18"	24"	48"
24"	48"	33"	30"	21"	18"	18"	15"	11"	21"	21"	28"	56"

THRUST BLOCK DETAIL
NOT TO SCALE

NOTES:
1. CONCRETE SHALL BE 3,000 PSI MINIMUM.
2. CONCRETE FOR THRUST BLOCKING SHALL BE KEPT FAIRLY DRY, THUS MAKING THE CONCRETE WEDGE SHAPE MORE EASILY FORMED WITH THE WIDEST PART (BLOCKING AREA) AGAINST THE UNDISTURBED SOIL.
3. NO CONCRETE SHALL COVER ANY BOLTS OR GLANDS.
4. ALL FITTINGS AND ACCESSORIES SHALL BE WRAPPED WITH 10 MIL POLYETHYLENE PRIOR TO POURING THE CONCRETE BLOCK.
5. VOLUME OF THRUST BLOCKING SHALL BE AS SHOWN ON THE THRUST BLOCKING SCHEDULE.

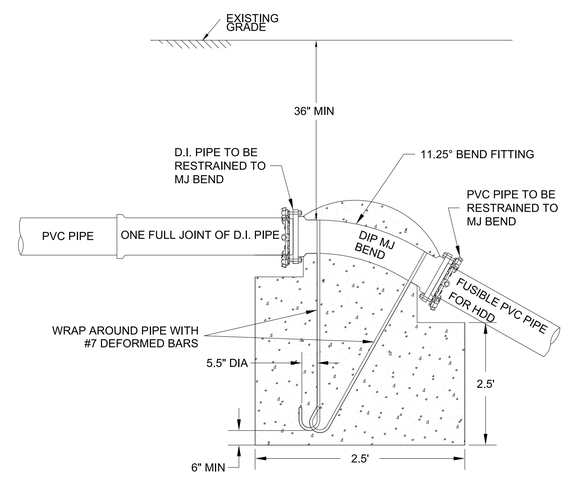

OPEN-CUT PIPE TO HDD FUSIBLE PVC PIPE TRANSITION ASSEMBLY
NOT TO SCALE

NOTES:
1. CONCRETE SHALL BE 3,000 PSI MINIMUM.
2. CONCRETE FOR THRUST BLOCKING SHALL BE KEPT FAIRLY DRY, THUS MAKING THE CONCRETE BLOCK SHAPE MORE EASILY FORMED WITH THE VERTICAL BEND FITTING.
3. NO CONCRETE SHALL COVER ANY BOLTS OR GLANDS.
4. ALL FITTINGS AND ACCESSORIES SHALL BE WRAPPED WITH 10 MIL POLYETHYLENE PRIOR TO POURING THE CONCRETE BLOCK.
5. THRUST BLOCK SHALL BE AS SHOWN AND THE BOTTOM OF THE BLOCK SHALL BEAR AGAINST UNDISTURBED SOIL.

WATER LINE DETAILS

8/17/99
3/25/2022 4:06:24 PM
\\wsp0-local\WSE\Projects\NC\CDM Smith\ENG2L-#### BP2.R019\Utilities\Engineering\UC\Proj\BP2R019_ut_UC-03B_dtl.dgn

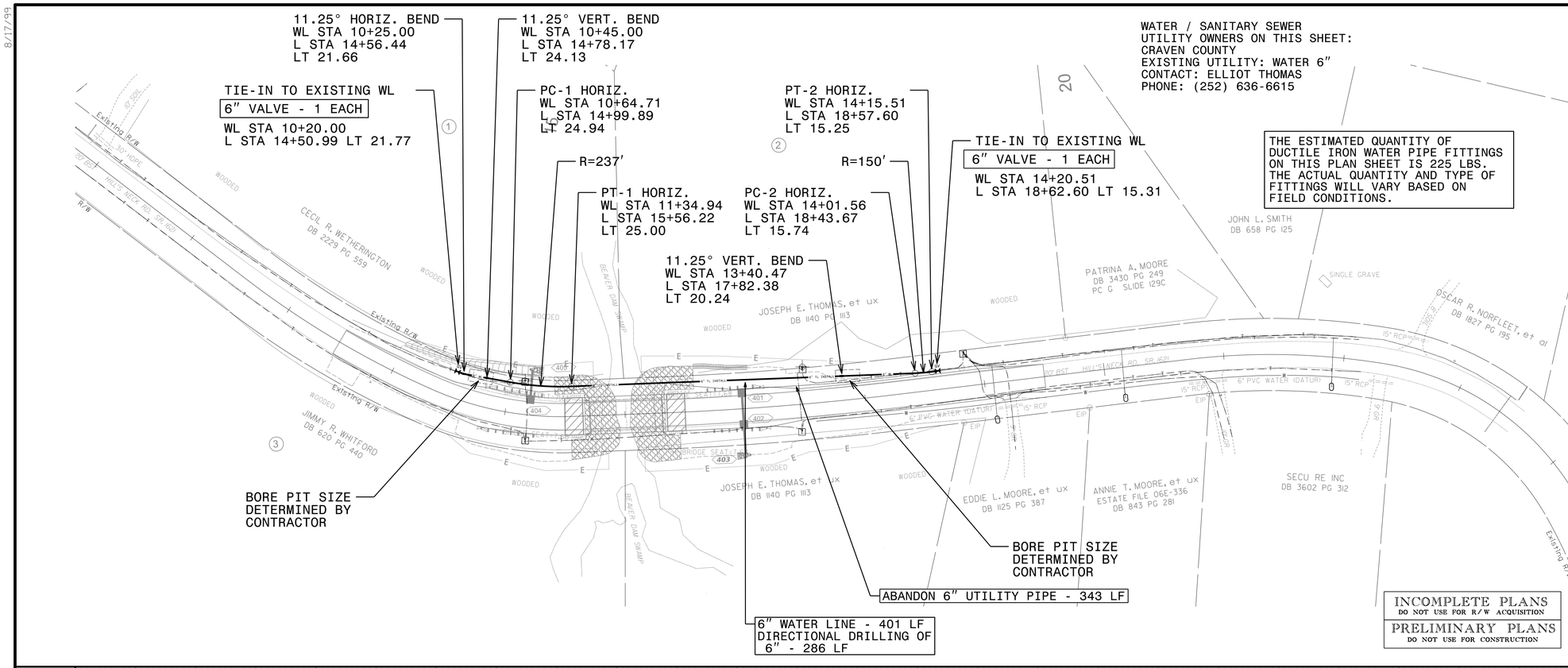

PROJECT REFERENCE NO.	SHEET NO.
BP2.R019	UC-4
DESIGNED BY: KCZ	
DRAWN BY: AJC	
CHECKED BY: KSH	
APPROVED BY: KCZ	
REVISED:	

NORTH CAROLINA DEPARTMENT OF TRANSPORTATION
UTILITIES ENGINEERING SEC.
PHONE:(919)707-6690
FAX:(919)250-4151

NORTH CAROLINA PROFESSIONAL SEAL 27611 ENGINEER KEVIN C. ZOEB

UTILITY CONSTRUCTION PLANS ONLY

DOCUMENT NOT CONSIDERED FINAL UNLESS ALL SIGNATURES COMPLETED

Weston & Sampson
WSE of North Carolina, PC
588 East Chatham Street Suite 137
Phone: 919.297.0220
NC License: C-4847
Cary, NC 27511
Fax: 919.297.0221

100% PLANS

PRELIMINARY PLANS
DO NOT USE FOR CONSTRUCTION

INCOMPLETE PLANS
DO NOT USE FOR R/W ACQUISITION

PRELIMINARY PLANS
DO NOT USE FOR CONSTRUCTION

-WL-

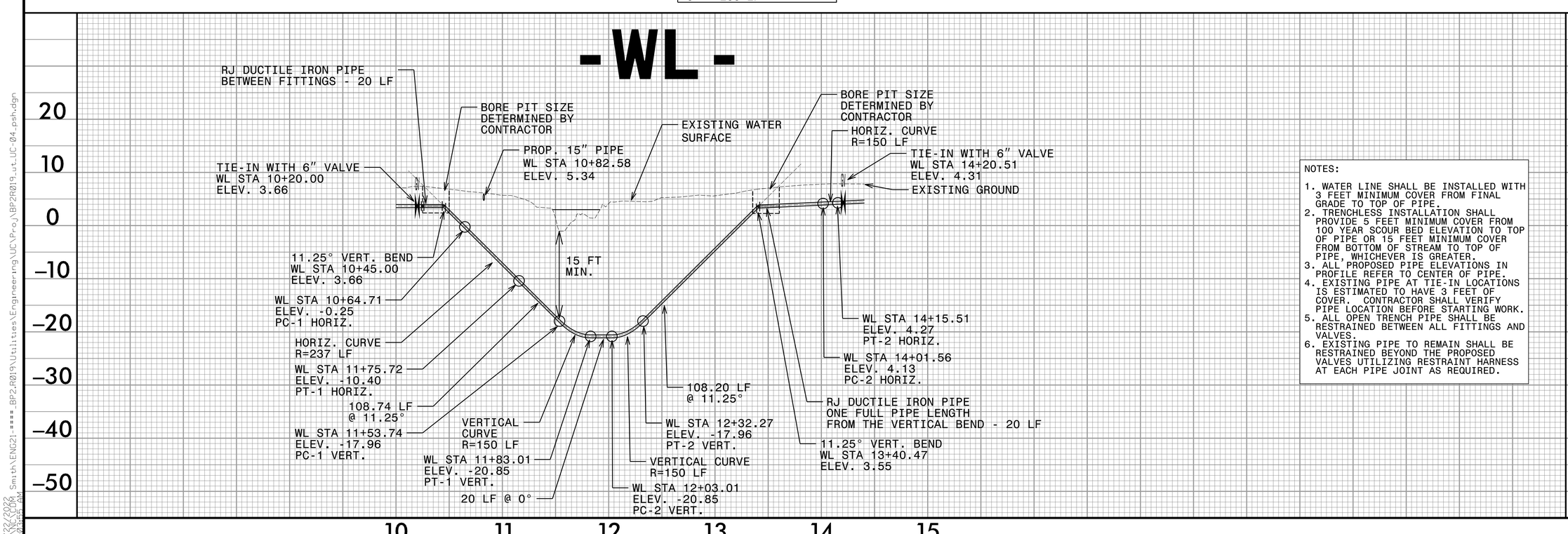

NOTES:

1. WATER LINE SHALL BE INSTALLED WITH 3 FEET MINIMUM COVER FROM FINAL GRADE TO TOP OF PIPE.
2. TRENCHLESS INSTALLATION SHALL PROVIDE 5 FEET MINIMUM COVER FROM 100 YEAR SCOUR BED ELEVATION TO TOP OF PIPE OR 15 FEET MINIMUM COVER FROM BOTTOM OF STREAM TO TOP OF PIPE, WHICHEVER IS GREATER.
3. ALL PROPOSED PIPE ELEVATIONS IN PROFILE REFER TO CENTER OF PIPE.
4. EXISTING PIPE AT TIE-IN LOCATIONS IS ESTIMATED TO HAVE 3 FEET OF COVER. CONTRACTOR SHALL VERIFY PIPE LOCATION BEFORE STARTING WORK.
5. ALL OPEN TRENCH PIPE SHALL BE RESTRAINED BETWEEN ALL FITTINGS AND VALVES.
6. EXISTING PIPE TO REMAIN SHALL BE RESTRAINED BEYOND THE PROPOSED VALVES UTILIZING RESTRAINT HARNESS AT EACH PIPE JOINT AS REQUIRED.

8/17/99

3/22/2022 8:36:06 AM
BY: Smith\ENG21-#### BP2.R019\Utilities\Engineering\UC\Proj\BP2R019_ut_UC_04_psh.dgn

09/08/99

TIP PROJECT: BP2.R019.1

T.I.P. NO.	SHEET NO.
BP2.R019.1	UO–1

NOTE:
ALL UTILITY WORK SHOWN ON THIS SHEET WILL BE DONE BY OTHERS. NO PAYMENT WILL BE MADE TO THE CONTRACTOR FOR UTILITY WORK SHOWN ON THIS SHEET.

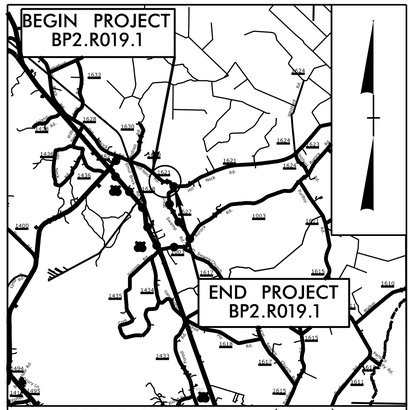

VICINITY MAP (NTS)
DETOUR ROUTE

STATE OF NORTH CAROLINA
DIVISION OF HIGHWAYS

UTILITIES BY OTHERS PLANS
CRAVEN COUNTY

LOCATION: REPLACE BRIDGE NO. 240026 OVER BEAVER DAM SWAMP ON SR 1621 (HILLS NECK ROAD)

TYPE OF WORK: RELOCATION OF COMMUNICATION

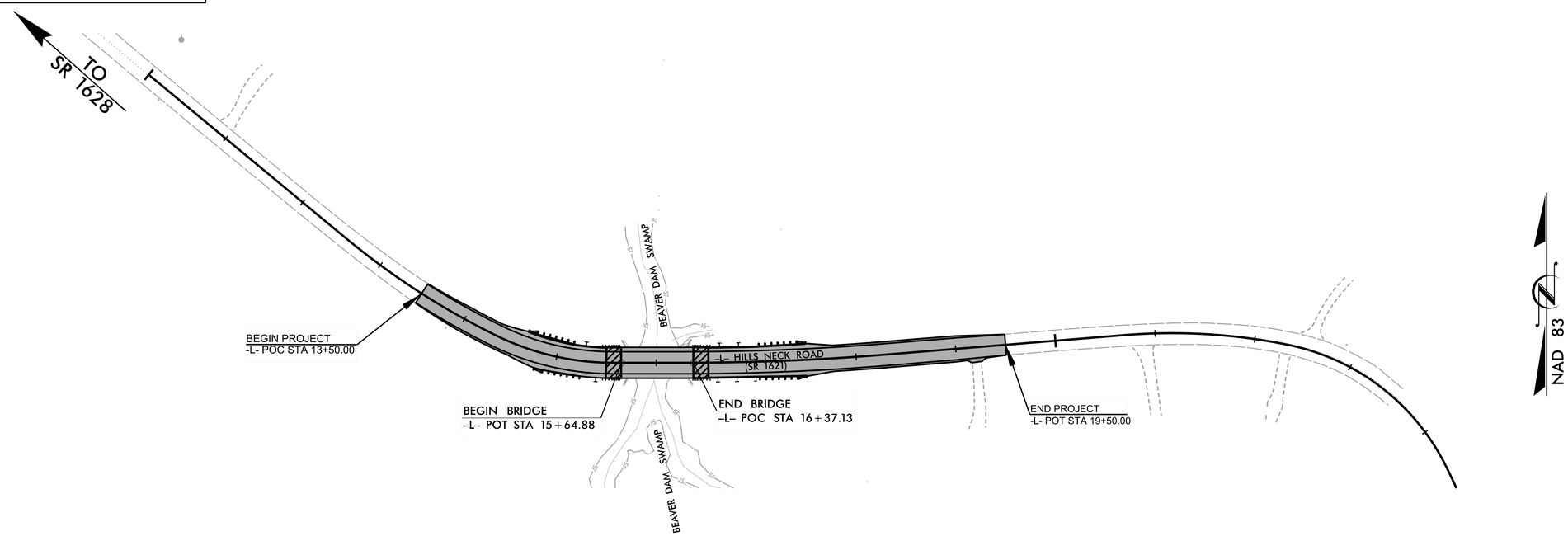

PRELIMINARY PLANS
DO NOT USE FOR CONSTRUCTION

GRAPHIC SCALES

50 25 0 50 100
PLANS

50 25 0 50 100
PROFILE (HORIZONTAL)

10 5 0 10 20
PROFILE (VERTICAL)

INDEX OF SHEETS

SHEET NO.:	*DESCRIPTION:*
UO–1	*TITLE SHEET*
UO–02	*UBO PLAN SHEET*

UTILITY OWNERS WITH CONFLICTS

(A) COMMUNICATIONS – SPECTRUM
(B) COMMUNICATIONS – CENTURYLINK

PREPARED IN THE OFFICE OF:

SAM™
2641 Sumner Boulevard
Suite 116
Raleigh, NC 27616
(919) 878–7466

FREDDIE BUNN — *UTILITY PROJECT MANAGER*
MATTHEW WARD — *PROJECT UTILITY COORDINATOR*

DIVISION OF HIGHWAYS
DIVISION 2
2815 Rouse Road Extension
Kinston, NC 28504

MICHAEL AMAN, PE — *DIVISION CONTACT #1*
DAVID KRAMER — *DIVISION CONTACT #2*

2/18/2022
...\Roadway\BP2.R019_ut_tsh.dgn
4:49:47 PM

PROJECT REFERENCE NO.	SHEET NO.
BP2.R.0191	U0-02
THIS SHEET CORRESPONDS TO RDY-4	

UTILITIES BY OTHERS

NOTE:
ALL PROPOSED UTILITY WORK SHOWN ON THIS SHEET WILL BE DONE BY OTHERS. NO PAYMENT WILL BE MADE TO THE CONTRACTOR FOR PROPOSED UTILITY WORK SHOWN ON THIS SHEET.

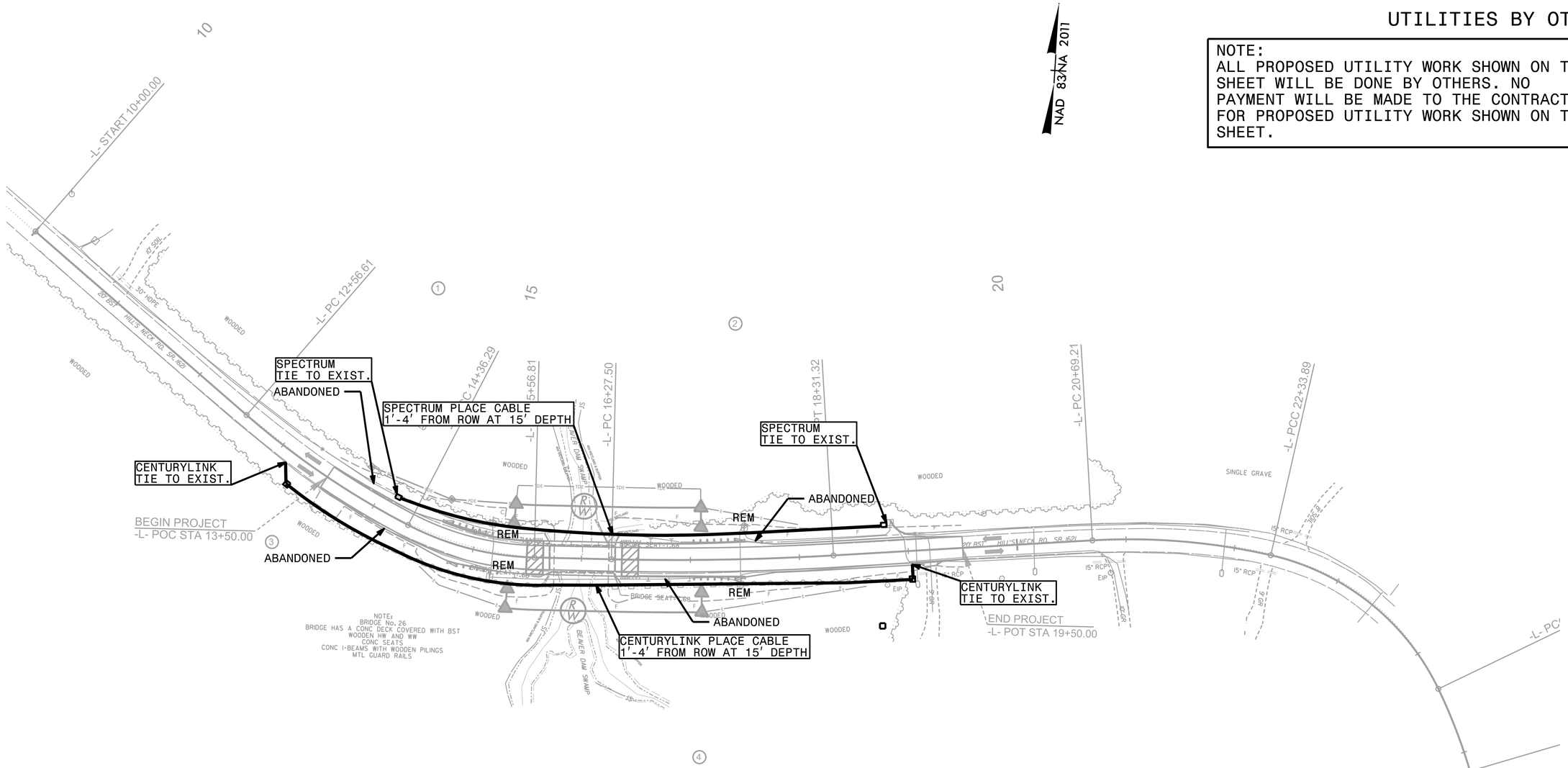

8/17/99

2/18/2022
2:42:17 PM
BP2R0191_ut_rdy4_U002_2.dgn

CROSS SECTION SHEET INDEX

X–1 CROSS SECTION SHEET INDEX
X–2 THRU X–6 –L–

Note: "Quantities are approximate only. The Resident Engineer will re–cross–section the work accurately when the project is staked out. These cross–section notes will be used in computing the final quantities for which the contractor will be paid."

CDM Smith
CDM Smith Inc.
5400 Glenwood Avenue
Suite 400
Raleigh, NC 27612-3228
NC COA No. F-1255

0 5 10

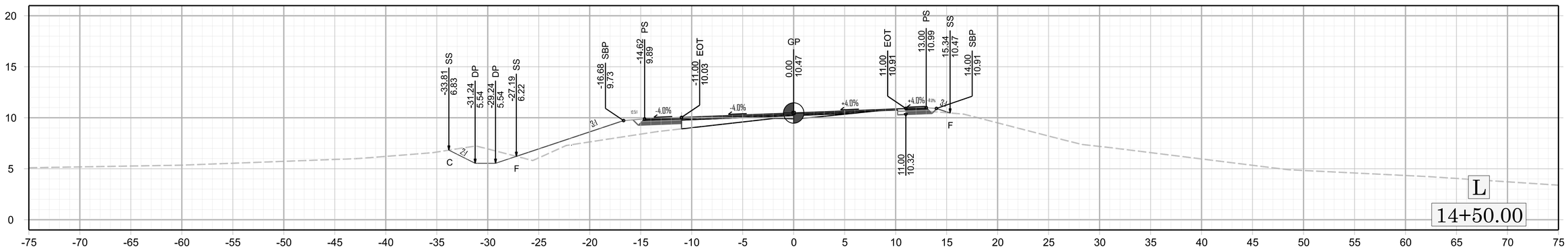

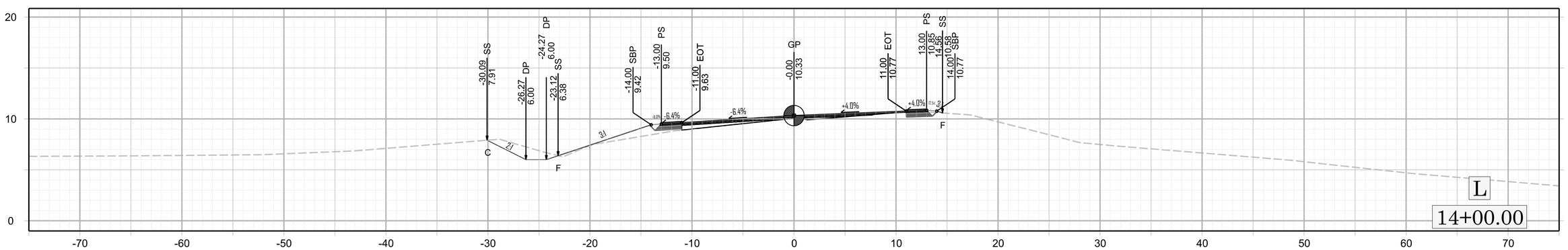

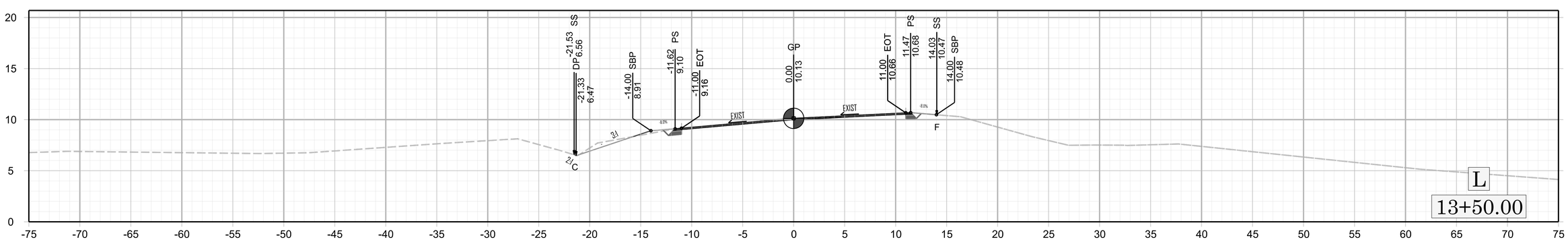

BEGIN PROJECT -L- STA 13+50.00

CDM Smith
CDM Smith Inc.
5400 Glenwood Avenue
Suite 400
Raleigh, NC 27612-3228
NC COA No. F-1255

0 5 10

BP2.R019.1
X 003

5/26/20

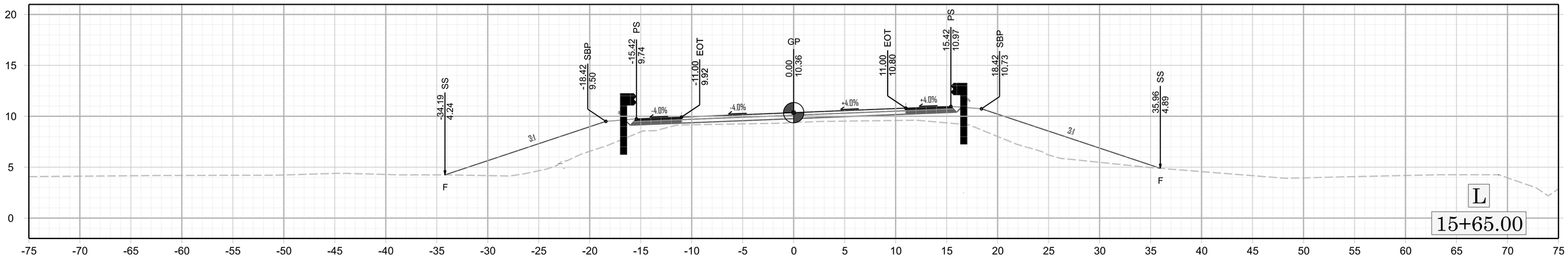

BEGIN BRIDGE -L- STA. 15+65±

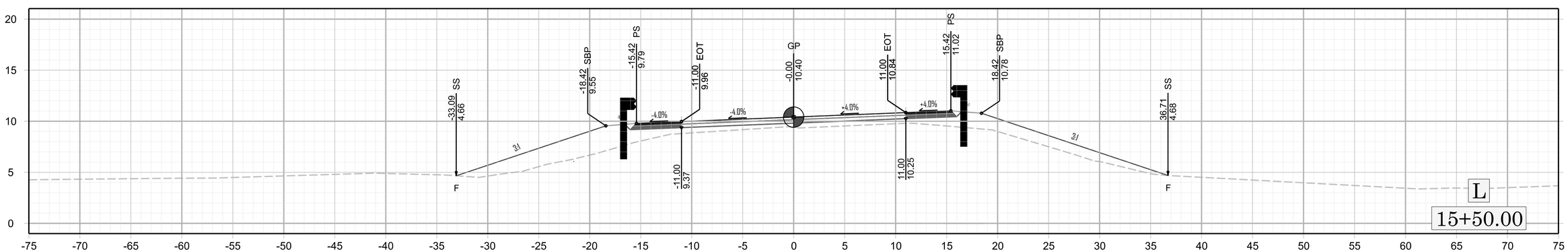

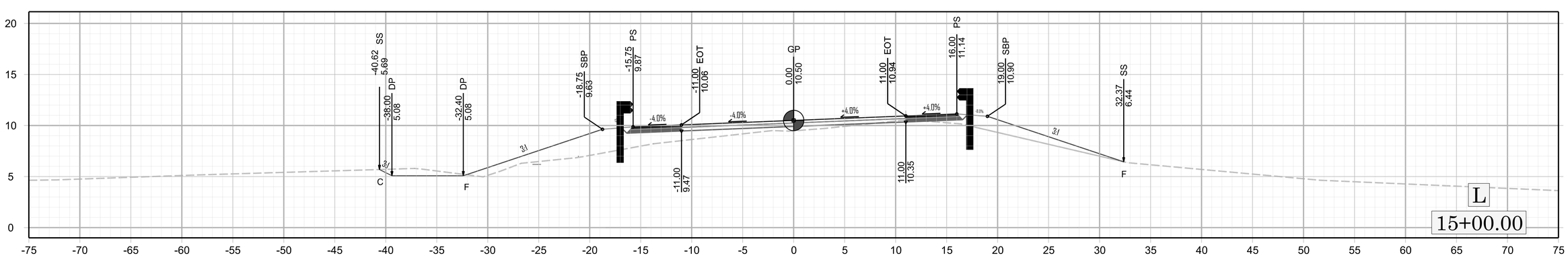

CDM Smith
CDM Smith Inc.
5400 Glenwood Avenue
Suite 400
Raleigh, NC 27612-3228
NC COA No. F-1255

0 5 10

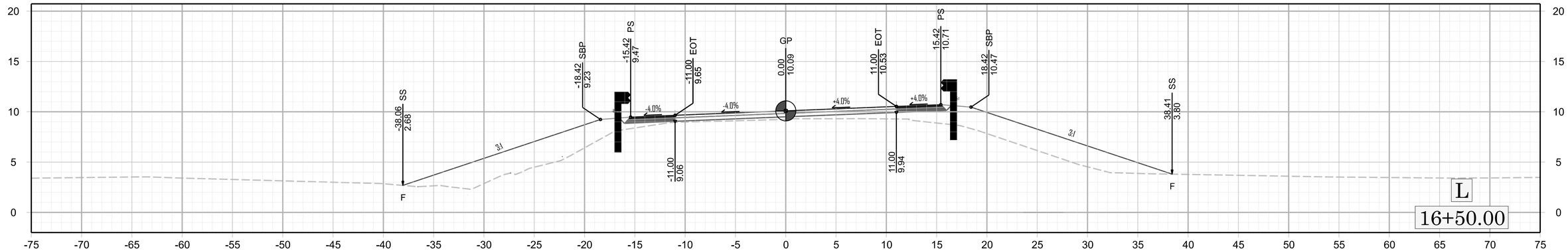

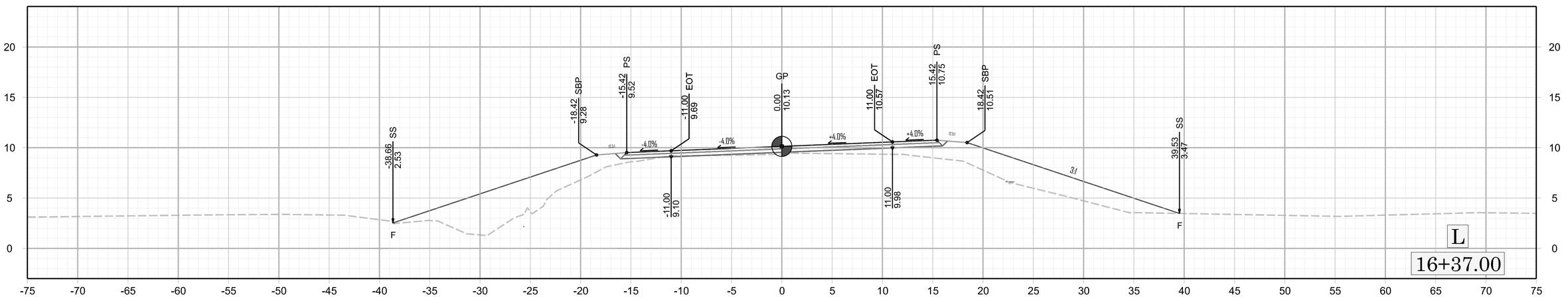

END BRIDGE -L- STA. 16+37±

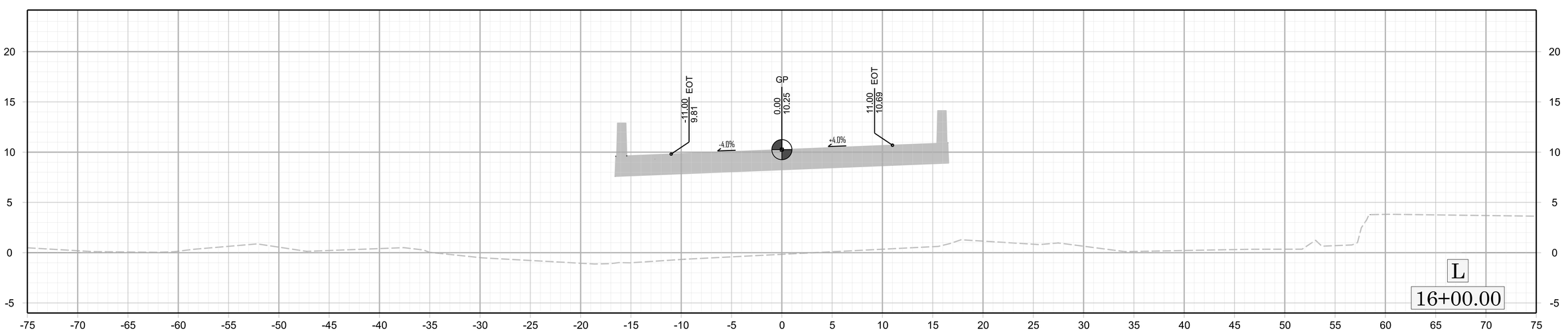

CDM Smith
CDM Smith Inc.
5400 Glenwood Avenue
Suite 400
Raleigh, NC 27612-3228
NC COA No. F-1255

0 5 10

BP2.R019.1
X 005

5/26/20

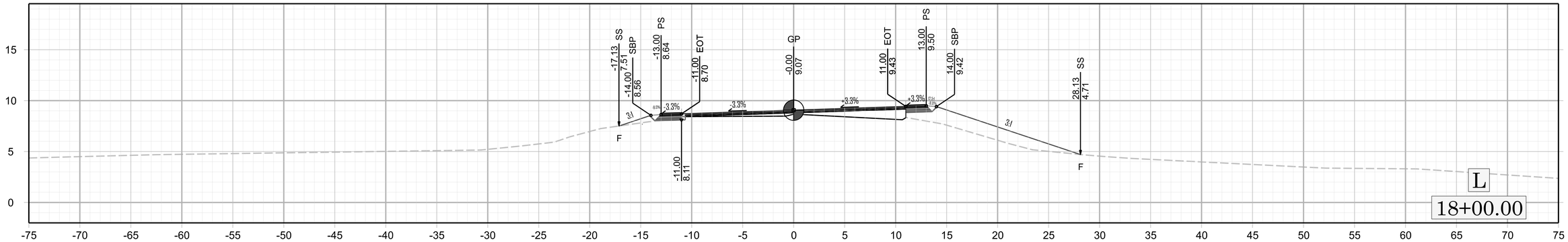

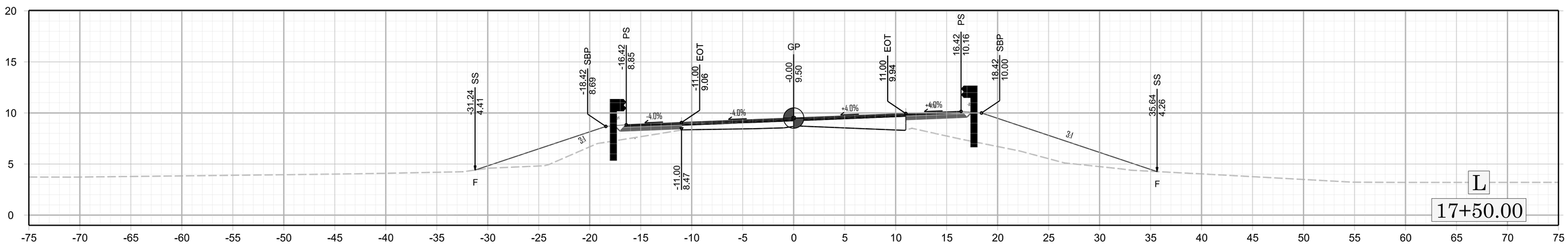

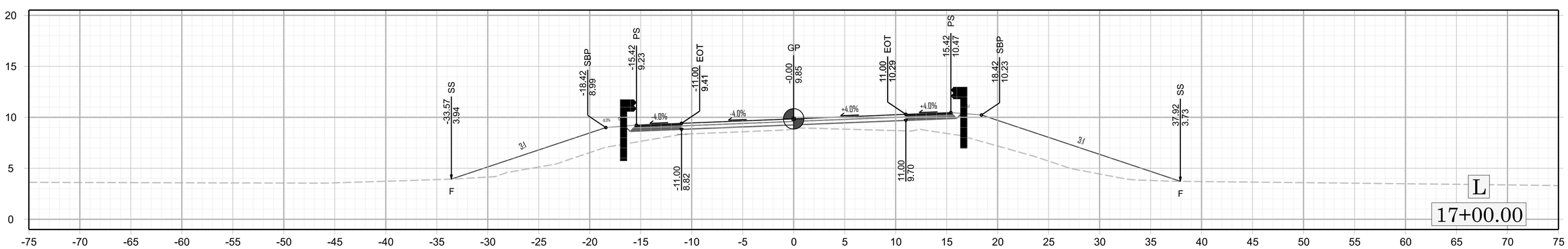

CDM Smith
CDM Smith Inc.
5400 Glenwood Avenue
Suite 400
Raleigh, NC 27612-3228
NC COA No. F-1255

0 5 10

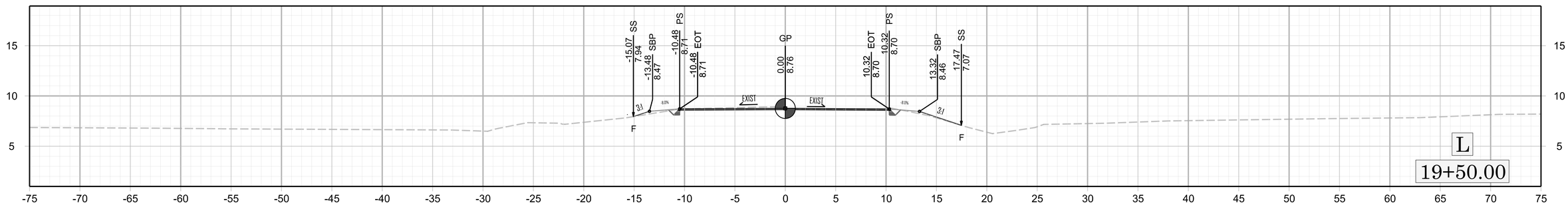

END PROJECT -L- STA 19+50.00

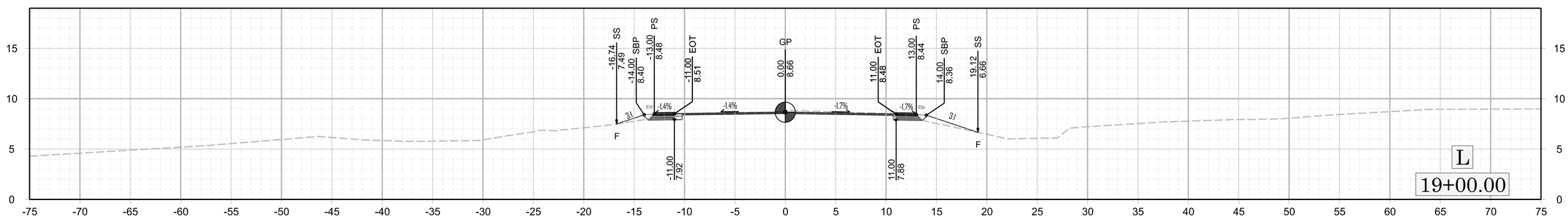

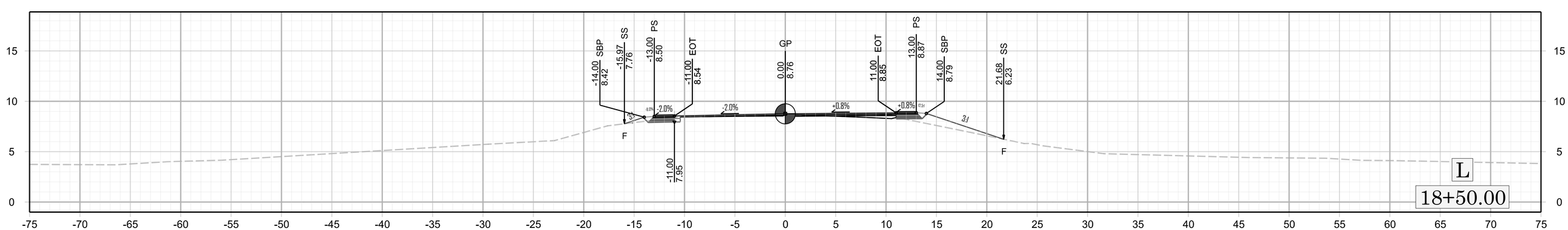

DocuSign Envelope ID: FE351376-846F-47CA-A746-3655C82D0A84

PROJECT: BP2.R019.1

CONTRACT: DB00533

STRUCTURE

STATE	STATE PROJECT REFERENCE NO.	SHEET NO.	TOTAL SHEETS
N.C.	BP2.R019.1		15

STATE PROJ. NO.	F. A. PROJ. NO.	DESCRIPTION
BP2.R019.1	N/A	P.E.
BP2.R019.2	N/A	UTIL. & R/W
BP2.R019.3	N/A	CONSTR.

STATE OF NORTH CAROLINA
DIVISION OF HIGHWAYS

CRAVEN COUNTY

LOCATION: REPLACE BRIDGE 26 OVER BEAVER DAM SWAMP ON SR 1621 (HILLS NECK ROAD)

TYPE OF WORK: GRADING, DRAINAGE, PAVING, AND STRUCTURE

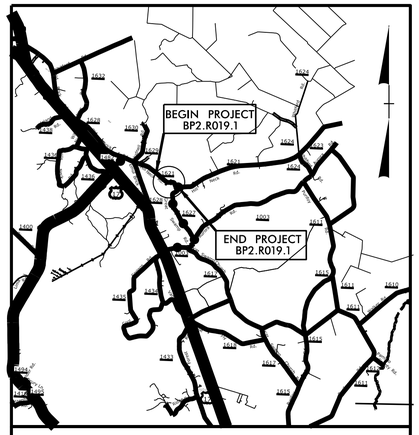

VICINITY MAP

OFF–SITE DETOUR ROUTE

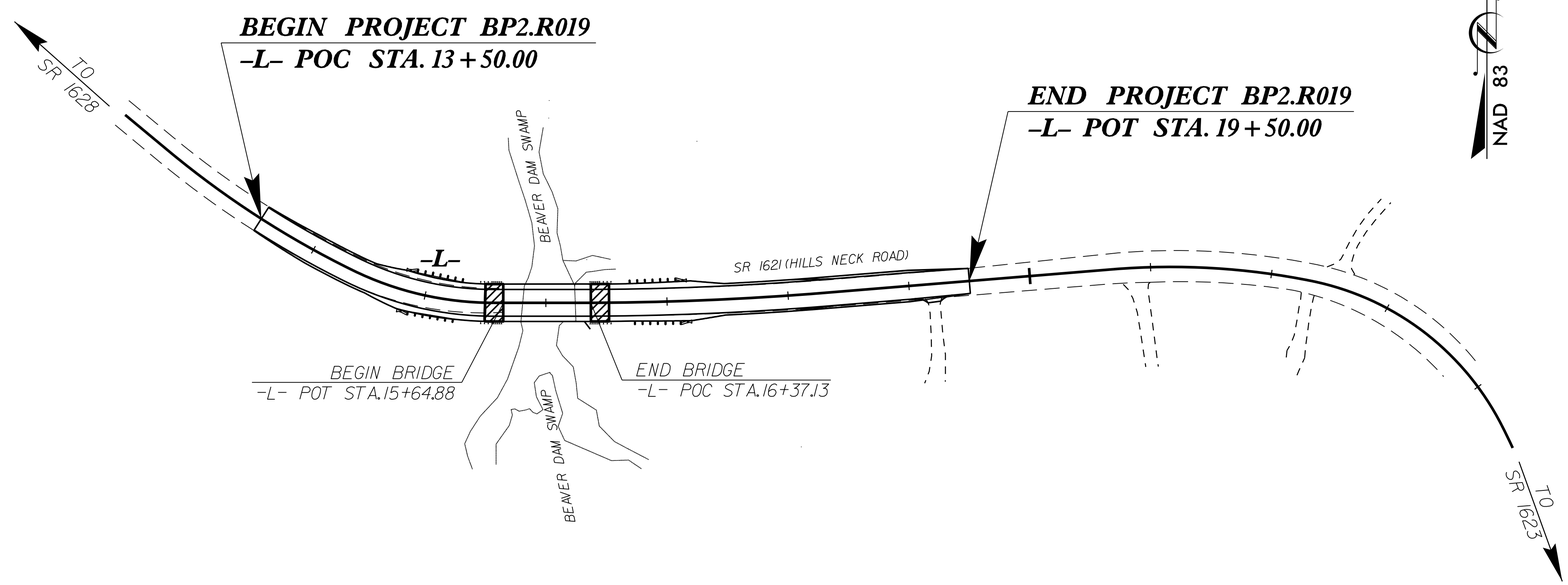

DESIGN DATA

ADT 2022 = 860 VPD
ADT 2042 = 1550 VPD
K = N/A %
D = N/A %
T = 6 % *
V = 60 MPH

* TTST = N/A, DUAL = N/A

FUNC CLASS = LOCAL SUB–REGIONAL TIER

PROJECT LENGTH

LENGTH ROADWAY PROJECT BP2.R019 = 0.100 MILES

LENGTH STRUCTURE PROJECT BP2.R019 = 0.014 MILES

TOTAL LENGTH OF PROJECT BP2.R019 = 0.114 MILES

Prepared In the Office of:
CDM Smith
CDM SMITH
5400 Glenwood Avenue, Suite 400
Raleigh, NC 27612–3228
NC COA No. F–1255
FOR THE NORTH CAROLINA DEPARTMENT OF TRANSPORTATION

2018 STANDARD SPECIFICATIONS

LETTING DATE : JULY 27, 2022

ADAM M. CONRAD, PE
PROJECT ENGINEER

TING H. FANG, P.E.
PROJECT DESIGN ENGINEER

MICHAEL AMAN, P.E.
NCDOT CONTACT

NORTH CAROLINA PROFESSIONAL SEAL 16301 ENGINEER TING HSILING FANG

DocuSigned by:
Ting Fang
80E43C9AEA60462...
6/15/2022

DocuSign Envelope ID: A36E5F80-8DC5-4767-AA89-7B0A5F9DCF90

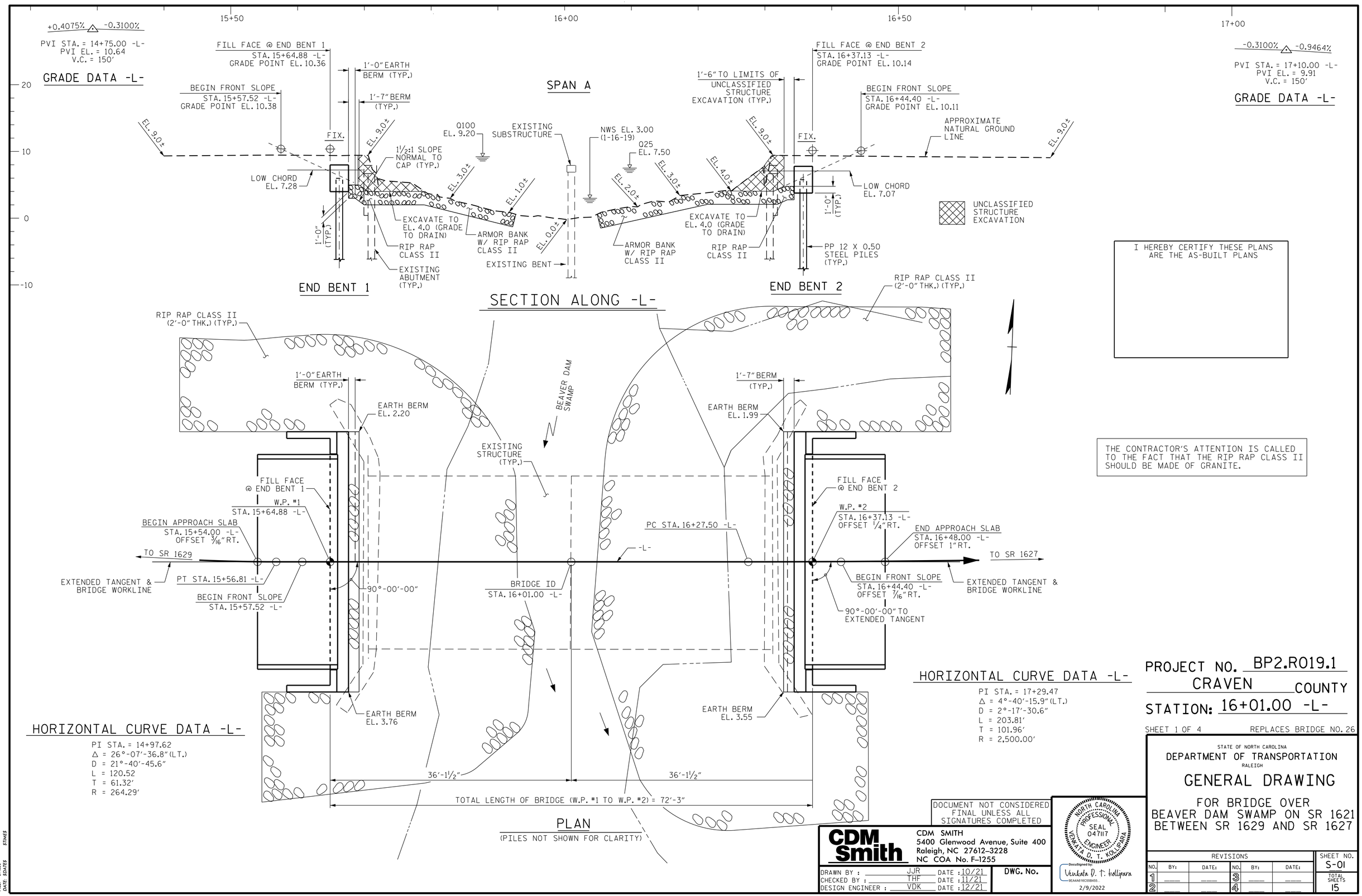

DocuSign Envelope ID: A36E5F80-8DC5-4767-AA89-7B0A5F9DCF90

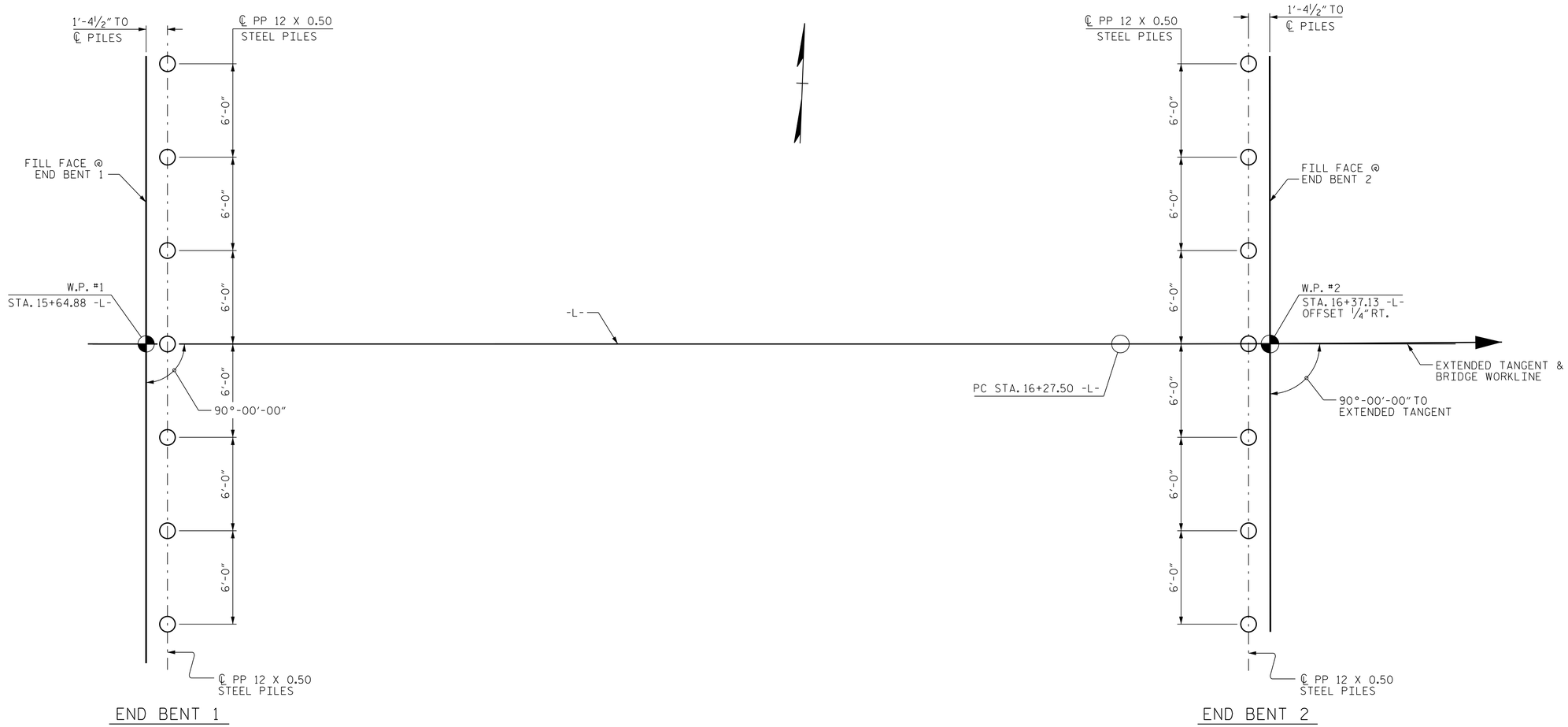

FOUNDATION LAYOUT

DIMENSIONS LOCATING PILES ARE SHOWN TO THE CENTERLINE OF PILES.
ALL PILES ARE VERTICAL.

NOTES

FOR PILES, SEE PILES PROVISION AND SECTION 450 OF THE STANDARD SPECIFICATIONS.

PROJECT NO. BP2.R019.1
CRAVEN COUNTY
STATION: 16+01.00 -L-

SHEET 2 OF 4

STATE OF NORTH CAROLINA
DEPARTMENT OF TRANSPORTATION
RALEIGH

GENERAL DRAWING

FOR BRIDGE OVER BEAVER DAM SWAMP ON SR 1621 BETWEEN SR 1629 AND SR 1627

DOCUMENT NOT CONSIDERED FINAL UNLESS ALL SIGNATURES COMPLETED

CDM Smith
CDM SMITH
5400 Glenwood Avenue, Suite 400
Raleigh, NC 27612-3228
NC COA No. F-1255

DRAWN BY : JJR DATE : 10/21
CHECKED BY : THF DATE : 11/21
DESIGN ENGINEER : VDK DATE : 12/21

DWG. No.

NORTH CAROLINA PROFESSIONAL SEAL 047117 ENGINEER VENKATA D. T. KOLLIPARA
DocuSigned by: Venkata D. T. Kollipara
SEAL AND SIGNATURE VERIFIED 2/9/2022

REVISIONS						SHEET NO.
NO.	BY:	DATE:	NO.	BY:	DATE:	S-02
1			3			TOTAL SHEETS
2			4			15

FILE: SPILES
DATE: STATES STATES

DocuSign Envelope ID: 2E3E70F5-D1BE-475D-85E5-A7F6EA166C73

SUMMARY OF PILE INFORMATION/INSTALLATION

(Blank entries indicate item is not applicable to structure)

End Bent/ Bent No, Pile(s) #-# (e.g., "Bent 1, Piles 1-5")	Factored Resistance per Pile TONS	Pile Cut-Off (Top of Pile) Elevation FT	Estimated Pile Lenth per Pile FT	Scour Critical Elevation FT	Driven Piles			Predrilling for Piles*			Drilled-In Piles		
					Min Pile Tip (Tip No Higher Than) Elev FT	Required Driving Resistance (RDR)** per Pile TONS	Total Pile Redrives Quantity EACH	Predrilling Length per Pile Lin FT	Predrilling Elevation (Elev Not To Predrill Below) FT	Maximum Predrilling Dia INCHES	Pile Excavation (Bottom of Hole) Elev FT	Pile Exc Not In Soil per Pile Lin FT	Pile Exc In Soil per Pile Lin FT
End Bent 1, Piles 1-7	81	Varies	20			135	7						
End Bent 2, Piles 1-7	81	Varies	35			135							

*Predrilling for Piles is required for end bents/bents with a predrilling length and at the Contractor's option for end bents/bents with predrilling information but no predrilling length.

$$^{**}RDR = \frac{Factored\ Resistance + Factored\ Downdrag\ Load + Factored\ Dead\ Load}{Dynamic\ Resistance\ Factor} + Nominal\ Downdrag\ Resistance + \frac{Nominal\ Scour\ Resistance}{Scour\ Resistance\ Factor}$$

SUMMARY OF PDA/PILE ORDER LENGTHS

(Blank entries indicate item is not applicable to structure)

Pile Driving Analyzer (PDA)				Pile Order Lengths	
End Bent/ Bent No	PDA Testing Required? YES or MAYBE	PDA Test Pile Length FT	Total PDA Testing Quantity EACH	End Bent/ Bent No(s)	Pile Order Length Basis* EST or PDA
End Bent 1	MAYBE	25	1		
End Bent 2	MAYBE	40			

*EST = Pile order lengths from estimated pile lengths; PDA = Pile order lengths based on PDA testing. For groups of end bents/bents with pile order lengths based on PDA testing, the first end bent/bent no. listed for each group is the representative end bent/bent with the PDA.

PILE DESIGN INFORMATION

(Blank entries indicate item is not applicable to structure)

End Bent/ Bent No, Pile(s) #-# (e.g., "Bent 1, Piles 1-5")	Factored Axial Load per Pile TONS	Factored Downdrag Load per Pile TONS	Factored Dead Load* per Pile TONS	Dynamic Resistance Factor	Nominal Downdrag Resistance per Pile TONS	Nominal Scour Resistance per Pile TONS	Scour Resistance Factor (Default = 1.00)
End Bent 1, Piles 1-7	81			0.60			1.00
End Bent 2, Piles 1-7	81			0.60			1.00

*Factored Dead Load is factored weight of pile above the ground line.

SUMMARY OF PILE ACCESSORIES

(Blank entries indicate item is not applicable to structure)

End Bent/ Bent No, Pile(s) #-# (e.g., "Bent 1, Piles 1-5")	Pipe Pile Plates Required? YES or MAYBE	Steel Pile Points			Steel Pile Tips Required? YES
		Pipe Pile Cutting Shoes Required? YES	Pipe Pile Conical Points Required? YES	H-Pile Points Required? YES	
End Bent 1, Piles 1-7	YES				
End Bent 2, Piles 1-7	YES				
TOTAL QTY:	14				

PROJECT NO. SF-260024 (BP2.R0019.1)

CRAVEN COUNTY

STATION: 16+00.01 -L-

NOTES:

1. The Pile Foundation Tables are based on the bridge substructure design and foundation recommendations sealed by a North Carolina Professional Engineer (Thein Tun Zan, PE #030943) on 11-17-2021.
2. Total Pile Driving Equipment Setup quantity (not shown in Pile Foundation Tables) equals the number of driven piles, i.e., the number of piles with a Required Driving Resistance.
3. The Engineer will determine the need for PDA Testing when PDAs may be required.

NORTH CAROLINA PROFESSIONAL SEAL 16301 ENGINEER TING-HSIUNG FANG

DocuSigned by: Ting Fang 60E43C9AEA60462... 2/8/2022

SIGNATURE DATE

DOCUMENT NOT CONSIDERED FINAL UNLESS ALL SIGNATURES COMPLETED

STATE OF NORTH CAROLINA
DEPARTMENT OF TRANSPORTATION
RALEIGH

PILE FOUNDATION TABLES

REVISIONS						
NO.	BY:	DATE:	NO.	BY:	DATE:	
1			3			
2			4			

SHEET NO. S-03

TOTAL SHEETS 15

DocuSign Envelope ID: A36E5F80-8DC5-4767-AA89-7B0A5F9DCF90

TOTAL BILL OF MATERIAL

	REMOVAL OF EXISTING STRUCTURE	ASBESTOS ASSESSMENT	PDA TESTING	UNCLASSIFIED STRUCTURE EXCAVATION	CLASS A CONCRETE	BRIDGE APPROACH SLABS	REINFORCING STEEL	PILE DRIVING EQUIPMENT SETUP FOR PP 12 X 0.50 STEEL PILES	PP 12 X 0.50 STEEL PILES		STEEL PILE PLATES	PILE REDRIVES	VERTICAL CONCRETE BARRIER RAIL	RIP RAP CLASS II (2'-0" THICK)	GEOTEXTILE FOR DRAINAGE	ELASTOMERIC BEARINGS	3'-0" X 2'-0" PRESTRESSED CONCRETE CORED SLABS	
	LUMP SUM	LUMP SUM	EA.	LUMP SUM	CU. YDS.	LUMP SUM	LBS.	EA.	NO.	LIN. FT.	EA.	EA.	LIN. FT.	TON	SQ. YD.	LUMP SUM	NO.	LIN. FT.
SUPERSTRUCTURE													140.0			LUMP SUM	11	770
END BENT 1				LUMP SUM	21.8		2,596	7	7	140.0	7			230	255			
END BENT 2				LUMP SUM	21.8		2,596	7	7	245.0	7			293	325			
TOTAL	LUMP SUM	LUMP SUM	1	LUMP SUM	43.6	LUMP SUM	5,192	14	14	385.0	14	7	140.0	523	580	LUMP SUM	11	770

B.M. #1: STA. 16+06.24 -L-, 147.93' LT., EL. 4.36'

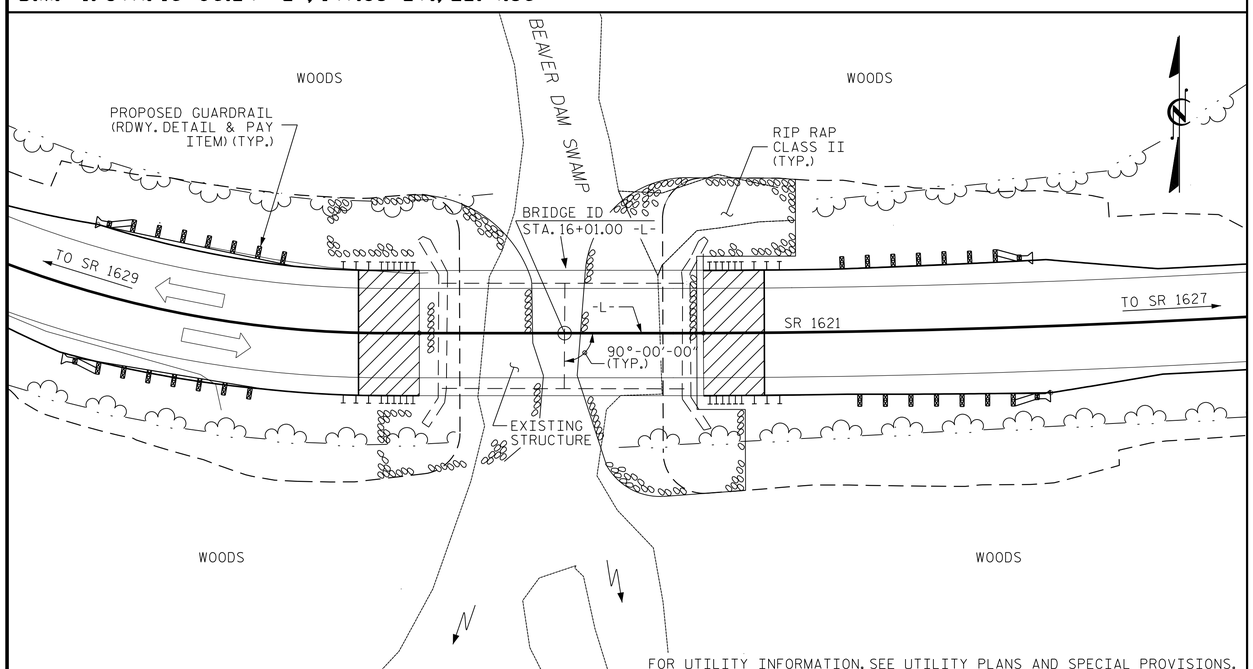

LOCATION SKETCH

HYDRAULIC DATA

DESIGN DISCHARGE	= 840 CFS
FREQUENCY OF DESIGN FLOOD	= 25 YR.
DESIGN HIGH WATER ELEVATION	= 7.5 FT.
DRAINAGE AREA	= 7.6 SQ. MI.
BASE DISCHARGE (Q100)	= 1,312 CFS
BASE HIGH WATER ELEVATION	= 9.2 FT.

OVERTOPPING FLOOD DATA

OVERTOPPING DISCHARGE	= 1,312 CFS
FREQUENCY OF OVERTOPPING FLOOD	= 100 YRS.
OVERTOPPING FLOOD ELEVATION	= 8.5 FT. *

* OVERTOPPING OCCURS AT STA. 19+08.10 - L-.

NOTES:

ASSUMED LIVE LOAD = HL-93 OR ALTERNATE LOADING.

THIS BRIDGE HAS BEEN DESIGNED IN ACCORDANCE WITH THE AASHTO LRFD BRIDGE DESIGN SPECIFICATIONS

THIS BRIDGE IS LOCATED IN SEISMIC PERFORMANCE ZONE 1.

FOR OTHER DESIGN DATA AND GENERAL NOTES, SEE SHEET SN.

FOR EROSION CONTROL MEASURES SEE EROSION CONTROL PLANS.

THIS STRUCTURE HAS BEEN DESIGNED IN ACCORDANCE WITH "HEC-18 EVALUATING SCOUR AT BRIDGES".

REMOVAL OF THE EXISTING BRIDGE SHALL BE PERFORMED SO AS NOT TO ALLOW DEBRIS TO FALL INTO THE WATER. THE CONTRACTOR SHALL REMOVE THE BRIDGE AND SUBMIT PLANS FOR DEMOLITION IN ACCORDANCE WITH ARTICLE 402-2 OF THE STANDARD SPECIFICATIONS.

THE SUBSTRUCTURE OF THE EXISTING BRIDGE INDICATED ON THE PLANS IS FROM THE BEST INFORMATION AVAILABLE. SINCE THIS INFORMATION IS SHOWN FOR THE CONVENIENCE OF THE CONTRACTOR, THE CONTRACTOR SHALL HAVE NO CLAIM WHATSOEVER AGAINST THE DEPARTMENT OF TRANSPORTATION FOR ANY DELAYS OR ADDITIONAL COST INCURRED BASED ON DIFFERENCES BETWEEN THE EXISTING BRIDGE SUBSTRUCTURE SHOWN ON THE PLANS AND THE ACTUAL CONDITIONS AT THE PROJECT SITE.

THE MATERIAL SHOWN IN THE CROSS-HATCHED AREA ON SHEET S-01 SHALL BE EXCAVATED FOR A DISTANCE OF 27 FT. LEFT SIDE, 35 FT. RIGHT SIDE AT END BENT 1 AND 24 FT. LEFT SIDE, 30 FT. RIGHT SIDE AT END BENT 2 OF CENTERLINE ROADWAY AS DIRECTED BY THE ENGINEER. THIS WORK WILL BE PAID FOR AT THE CONTRACT LUMP SUM PRICE FOR UNCLASSIFIED STRUCTURE EXCAVATION. SEE SECTION 412 OF THE STANDARD SPECIFICATIONS.

THE EXISTING STRUCTURE CONSISTING OF 2 SPANS: 1 @ 30'-6", 1 @ 30'-4" WITH A CLEAR ROADWAY WIDTH OF 24'-4", 4" AWS AND PRESTRESSED CONCRETE CHANNELS; SUBSTRUCTURE CONSISTING OF REINFORCED CONCRETE CAPS ON TIMBER PILES AT END BENTS AND INTERIOR BENT LOCATED AT THE SITE OF THE PROPOSED BRIDGE SHALL BE REMOVED. THE EXISTING BRIDGE IS PRESENTLY POSTED FOR LOAD LIMIT. SHOULD THE STRUCTURAL INTEGRITY OF THE BRIDGE DETERIORATE DURING CONSTRUCTION OF THE PROPOSED BRIDGE, A LOAD LIMIT MAY BE POSTED AND MAY BE REDUCED AS FOUND NECESSARY DURING THE LIFE OF THE PROJECT.

FOR REMOVAL OF EXISTING STRUCTURE, SEE SPECIAL PROVISIONS.

FOR FALSEWORK AND FORMWORK, SEE SPECIAL PROVISIONS.

FOR SUBMITTAL OF WORKING DRAWINGS, SEE SPECIAL PROVISIONS.

FOR CRANE SAFETY, SEE SPECIAL PROVISIONS.

FOR GROUT FOR STRUCTURES, SEE SPECIAL PROVISIONS.

FOR ASBESTOS ASSESSMENT FOR BRIDGE DEMOLITION AND RENOVATION ACTIVITIES, SEE SPECIAL PROVISIONS.

ASPHALT WEARING SURFACE IS INCLUDED IN ROADWAY QUANTITY ON ROADWAY PLANS.

PROJECT NO. BP2.R019.1
CRAVEN COUNTY
STATION: 16+01.00 -L-

SHEET 4 OF 4

STATE OF NORTH CAROLINA
DEPARTMENT OF TRANSPORTATION
RALEIGH

GENERAL DRAWING

FOR BRIDGE OVER BEAVER DAM SWAMP ON SR 1621 BETWEEN SR 1629 AND SR 1627

DOCUMENT NOT CONSIDERED FINAL UNLESS ALL SIGNATURES COMPLETED

CDM Smith
CDM SMITH
5400 Glenwood Avenue, Suite 400
Raleigh, NC 27612-3228
NC COA No. F-1255

DRAWN BY :	JJR	DATE :	10/21
CHECKED BY :	THF	DATE :	11/21
DESIGN ENGINEER :	VDK	DATE :	12/21

DWG. No.

NORTH CAROLINA PROFESSIONAL SEAL 047117 ENGINEER VENKATA D. T. KOLLIPARA

DocuSigned by: Venkata D. T. Kollipara
SEAL 047117 ENGINEER
2/9/2022

REVISIONS							SHEET NO.
NO.	BY:	DATE:	NO.	BY:	DATE:		S-04
1			3				TOTAL SHEETS
2			4				15

FILE: SFILES
DATE: $DATE$ $TIME$

DocuSign Envelope ID: A36E5F80-8DC5-4767-AA89-7B0A5F9DCF90

LOAD AND RESISTANCE FACTOR RATING (LRFD) SUMMARY FOR PRESTRESSED CONCRETE CORED SLABS

LEVEL		VEHICLE	WEIGHT (W) (TONS)	CONTROLLING LOAD RATING	MINIMUM RATING FACTORS (RF)	TONS = W X RF	STRENGTH I LIMIT STATE											SERVICE III LIMIT STATE						COMMENT NUMBER
							LIVELOAD FACTORS	MOMENT					SHEAR					LIVELOAD FACTORS	MOMENT					
								DISTRIBUTION FACTORS (DF)	RATING FACTOR	SPAN	GIRDER LOCATION	DISTANCE FROM LEFT END OF SPAN (ft)	DISTRIBUTION FACTORS (DF)	RATING FACTOR	SPAN	GIRDER LOCATION	DISTANCE FROM LEFT END OF SPAN (ft)		DISTRIBUTION FACTORS (DF)	RATING FACTOR	SPAN	GIRDER LOCATION	DISTANCE FROM LEFT END OF SPAN (ft)	
DESIGN LOAD RATING		HL-93(Inv)	N/A	1	1.006	--	1.75	0.273	1.03	70'	EL	34.5	0.507	1.32	70'	EL	6.9	0.80	0.273	**1.01**	70'	EL	**34.5**	
		HL-93(Opr)	N/A	--	1.341	--	1.35	0.273	1.34	70'	EL	34.5	0.507	1.72	70'	EL	6.9	N/A	--	--	--	--	--	
		HS-20(Inv)	36.000	2	1.306	47.020	1.75	0.273	1.34	70'	EL	34.5	0.507	1.65	70'	EL	6.9	0.80	0.273	**1.31**	70'	EL	**34.5**	
		HS-20(Opr)	36.000	--	1.740	62.640	1.35	0.273	1.74	70'	EL	34.5	0.507	2.14	70'	EL	6.9	N/A	--	--	--	--	--	
LEGAL LOAD RATING	SV	SNSH	13.500	--	2.917	39.379	1.4	0.273	3.75	70'	EL	34.5	0.507	4.87	70'	EL	6.9	0.80	0.273	2.92	70'	EL	34.5	
		SNGARBS2	20.000	--	2.187	43.741	1.4	0.273	2.81	70'	EL	34.5	0.507	3.47	70'	EL	6.9	0.80	0.273	2.19	70'	EL	34.5	
		SNAGRIS2	22.000	--	2.077	45.690	1.4	0.273	2.67	70'	EL	34.5	0.507	3.23	70'	EL	6.9	0.80	0.273	2.08	70'	EL	34.5	
		SNCOTTS3	27.250	--	1.452	39.565	1.4	0.273	1.87	70'	EL	34.5	0.507	2.43	70'	EL	6.9	0.80	0.273	1.45	70'	EL	34.5	
		SNAGGRS4	34.925	--	1.218	42.554	1.4	0.273	1.57	70'	EL	34.5	0.507	2.03	70'	EL	6.9	0.80	0.273	1.22	70'	EL	34.5	
		SNS5A	35.550	--	1.191	42.346	1.4	0.273	1.53	70'	EL	34.5	0.507	2.06	70'	EL	6.9	0.80	0.273	1.19	70'	EL	34.5	
		SNS6A	39.950	--	1.095	43.747	1.4	0.273	1.41	70'	EL	34.5	0.507	1.88	70'	EL	6.9	0.80	0.273	1.10	70'	EL	34.5	
		SNS7B	42.000	--	1.043	43.801	1.4	0.273	1.34	70'	EL	34.5	0.507	1.85	70'	EL	6.9	0.80	0.273	1.04	70'	EL	34.5	
	TTST	TNAGRIT3	33.000	--	1.336	44.087	1.4	0.273	1.72	70'	EL	34.5	0.507	2.23	70'	EL	6.9	0.80	0.273	1.34	70'	EL	34.5	
		TNT4A	33.075	--	1.342	44.401	1.4	0.273	1.72	70'	EL	34.5	0.507	2.17	70'	EL	6.9	0.80	0.273	1.34	70'	EL	34.5	
		TNT6A	41.600	--	1.100	45.746	1.4	0.273	1.41	70'	EL	34.5	0.507	1.98	70'	EL	6.9	0.80	0.273	1.10	70'	EL	34.5	
		TNT7A	42.000	--	1.106	46.462	1.4	0.273	1.42	70'	EL	34.5	0.507	1.94	70'	EL	6.9	0.80	0.273	1.11	70'	EL	34.5	
		TNT7B	42.000	--	1.147	48.180	1.4	0.273	1.47	70'	EL	34.5	0.507	1.80	70'	EL	6.9	0.80	0.273	1.15	70'	EL	34.5	
		TNAGRIT4	43.000	--	1.089	46.838	1.4	0.273	1.40	70'	EL	34.5	0.507	1.74	70'	EL	6.9	0.80	0.273	1.09	70'	EL	34.5	
		TNAGT5A	45.000	--	1.026	46.175	1.4	0.273	1.32	70'	EL	34.5	0.507	1.74	70'	EL	6.9	0.80	0.273	1.03	70'	EL	34.5	
		TNAGT5B	45.000	3	1.013	45.579	1.4	0.273	1.30	70'	EL	34.5	0.507	1.66	70'	EL	6.9	0.80	0.273	**1.01**	70'	EL	**34.5**	

LOAD FACTORS:

DESIGN LOAD RATING FACTORS	LIMIT STATE	γ_{DC}	γ_{DW}
	STRENGTH I	1.25	1.50
	SERVICE III	1.00	1.00

NOTES:

MINIMUM RATING FACTORS ARE BASED ON THE STRENGTH I AND SERVICE III LIMIT STATES.

ALLOWABLE STRESSES FOR SERVICE III LIMIT STATE ARE AS REQUIRED FOR DESIGN.

COMMENTS:

1.
2.
3.
4.

CONTROLLING LOAD RATING
1 DESIGN LOAD RATING (HL-93)
2 DESIGN LOAD RATING (HS-20)
3 LEGAL LOAD RATING **
** SEE CHART FOR VEHICLE TYPE

GIRDER LOCATION
I - INTERIOR GIRDER
EL - EXTERIOR LEFT GIRDER
ER - EXTERIOR RIGHT GIRDER

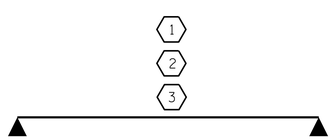

LRFR SUMMARY
FOR SPAN A

PROJECT NO. BP2.R019.1
CRAVEN COUNTY
STATION: 16+01.00 -L-

DOCUMENT NOT CONSIDERED FINAL UNLESS ALL SIGNATURES COMPLETED

CDM Smith
CDM SMITH
5400 Glenwood Avenue, Suite 400
Raleigh, NC 27612-3228
NC COA No. F-1255

DRAWN BY : JJR DATE : 10/21
CHECKED BY : THF DATE : 11/21
DESIGN ENGINEER : VDK DATE : 12/21

DWG. No.

NORTH CAROLINA PROFESSIONAL SEAL 047117 ENGINEER VENKATA D. T. KOLLIPARA

DocuSigned by: Venkata D. T. Kollipara
SEAL#047117 2/9/2022

STATE OF NORTH CAROLINA
DEPARTMENT OF TRANSPORTATION
RALEIGH

LRFR SUMMARY FOR
70' CORED SLAB UNIT
90° SKEW
SPAN A
(NON-INTERSTATE TRAFFIC)

REVISIONS						SHEET NO.
NO.	BY:	DATE:	NO.	BY:	DATE:	S-05
1			3			TOTAL SHEETS
2			4			15

FILE: $FILES
DATE: $DATES $TIMES

STD. NO. 24LRFR1_90S_70L

DocuSign Envelope ID: A36E5F80-8DC5-4767-AA89-7B0A5F9DCF90

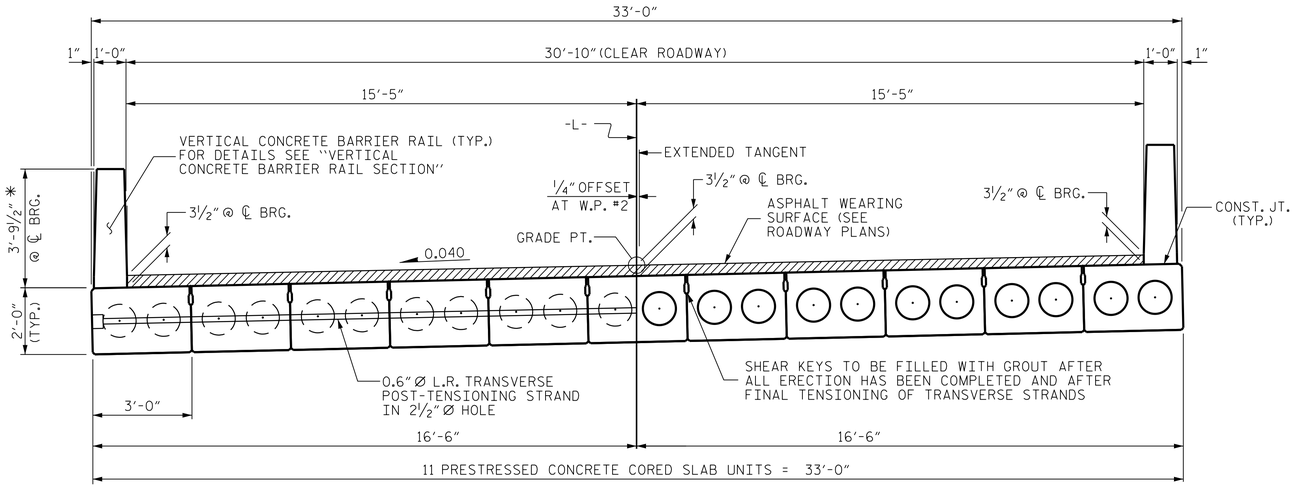

HALF SECTION
AT INTERMEDIATE DIAPHRAGMS

HALF SECTION
THROUGH VOIDS

TYPICAL SECTION

* - THE MAXIMUM BARRIER RAIL HEIGHT AND ASPHALT THICKNESS IS SHOWN. THE HEIGHT OF THE BARRIER RAIL AND ASPHALT THICKNESS VARIES WHILE THE TOP OF THE BARRIER RAIL FOLLOWS THE PROFILE OF THE GUTTERLINE. FOR RAIL HEIGHT DETAILS AND ASPHALT THICKNESS, SEE THE "VERTICAL CONCRETE BARRIER RAIL SECTION" DETAIL.

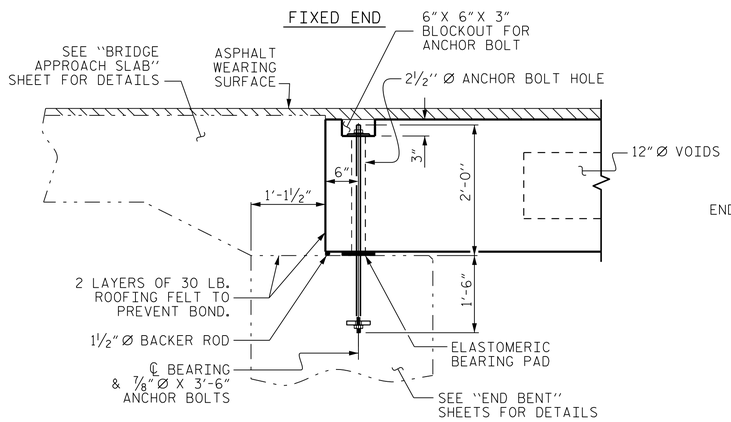

SECTION AT END BENT

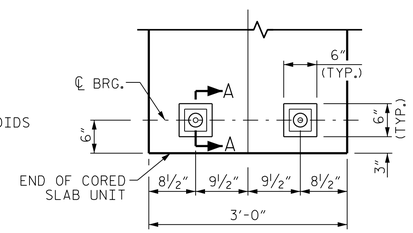

TYPICAL PLAN

FIXED END

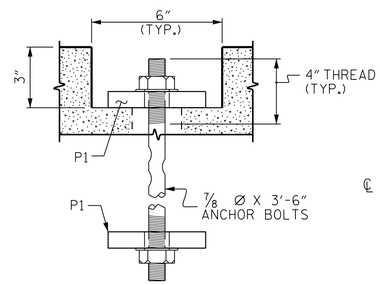

SECTION A-A

(FIXED)

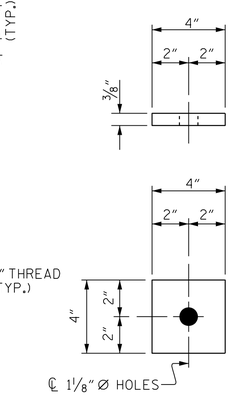

P1
(FIXED)
P1 (88 REQ'D.)

PLATE DETAILS

BLOCKOUT DETAIL FOR ANCHOR BOLTS

FOR ANCHOR BOLT AND BLOCKOUT NOTES, SEE SHEET S-08

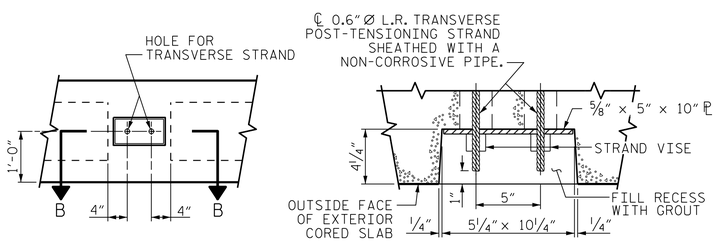

ELEVATION VIEW

SECTION B-B

GROUTED RECESS AT END OF POST-TENSIONED STRAND CORED SLABS

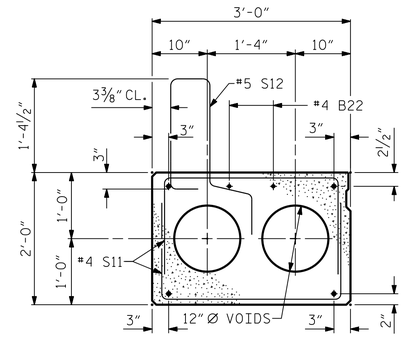

EXTERIOR SLAB SECTION

(FOR PRESTRESSED STRAND LAYOUT, SEE INTERIOR SLAB SECTION.)

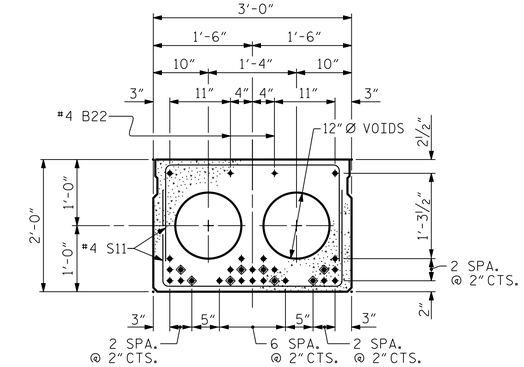

INTERIOR SLAB SECTION

(28 STRANDS REQUIRED)

0.6" Ø LOW RELAXATION STRAND LAYOUT

◈ BOND SHALL BE BROKEN ON THESE STRANDS FOR A DISTANCE OF 12'-0" FROM END OF CORED SLAB UNIT. SEE STANDARD SPECIFICATIONS, ARTICLE 1078-7.

DEBONDING LEGEND

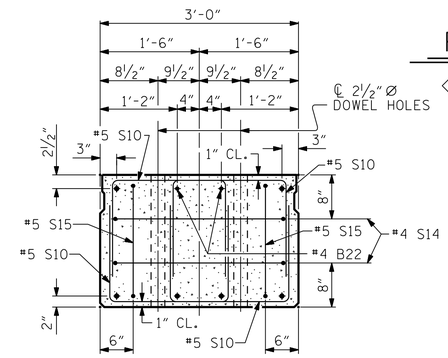

END ELEVATION

SHOWING PLACEMENT OF DOUBLE STIRRUPS AND LOCATION OF DOWEL HOLES. (STRAND LAYOUT NOT SHOWN.) INTERIOR SLAB UNIT SHOWN-EXTERIOR SLAB UNIT SIMILAR EXCEPT SHEAR KEY LOCATION.

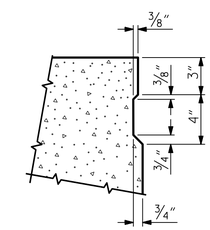

SHEAR KEY DETAIL

NOTE: OMIT SHEAR KEY ON OUTSIDE FACE OF EXTERIOR CORED SLABS.

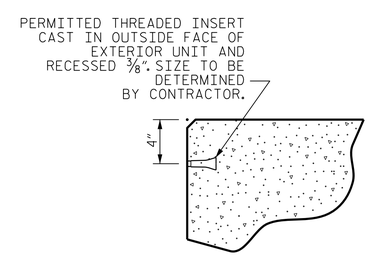

THREADED INSERT DETAIL

PROJECT NO. BP2.R019.1
CRAVEN COUNTY
STATION: 16+01.00 -L-

SHEET 1 OF 3

STATE OF NORTH CAROLINA
DEPARTMENT OF TRANSPORTATION
RALEIGH

3'-0" X 2'-0" PRESTRESSED CONCRETE CORED SLAB UNIT 90° SKEW SPAN A

DOCUMENT NOT CONSIDERED FINAL UNLESS ALL SIGNATURES COMPLETED

CDM Smith
CDM SMITH
5400 Glenwood Avenue, Suite 400
Raleigh, NC 27612-3228
NC COA No. F-1255

DRAWN BY : JJR DATE : 10/21
CHECKED BY : THF DATE : 11/21
DESIGN ENGINEER : VDK DATE : 12/21

DWG. No.

NORTH CAROLINA PROFESSIONAL SEAL 047117 ENGINEER VENKATA D. T. KOLLIPARA
DocuSigned by: Venkata D. T. Kollipara
9EA4A6161C55B455...
2/9/2022

REVISIONS							SHEET NO.
NO.	BY:	DATE:	NO.	BY:	DATE:		S-06
1			3				TOTAL SHEETS
2			4				15

FILE: SFILES
DATE: SDATES
STIMES

STD. NO. 24PCS4_33_90S

DocuSign Envelope ID: A36E5F80-8DC5-4767-AA89-7B0A5F9DCF90

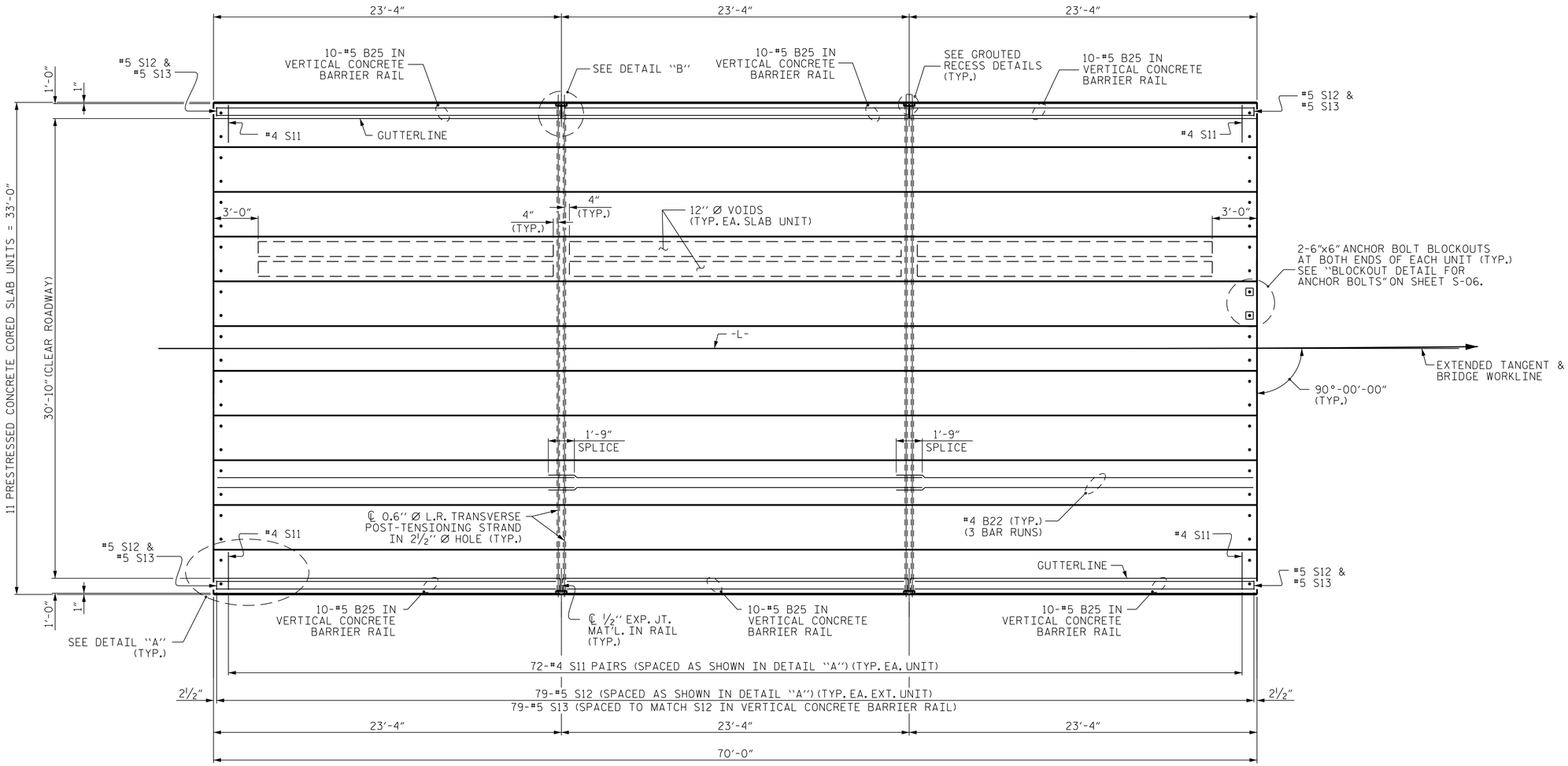

PLAN OF SPAN A

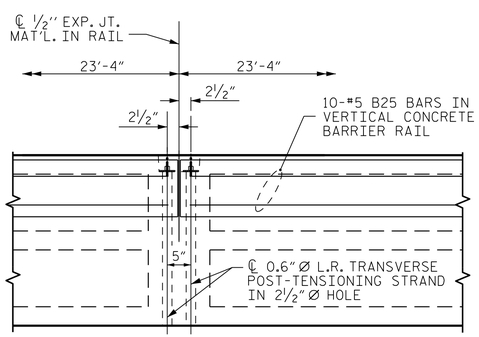

DETAIL "B"

#4 S11 BARS MAY BE SHIFTED AS NECESSARY
TO MAINTAIN 1" CLEAR TO GROUTED RECESS AND
2½" Ø TRANSVERSE POST-TENSIONING STRAND HOLES

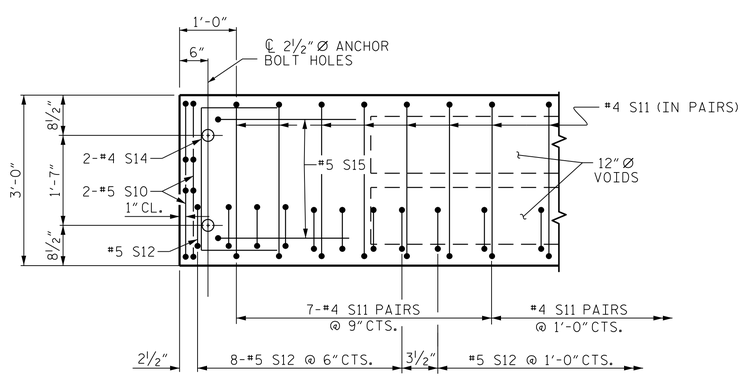

DETAIL "A"

(TYPICAL EACH END OF UNIT)
NOTE: EXTERIOR UNIT SHOWN - INTERIOR
UNIT SIMILAR EXCEPT OMIT #5 S12 BARS.
6"x6" ANCHOR BOLT BLOCKOUTS NOT SHOWN FOR CLARITY

PROJECT NO. BP2.R019.1
CRAVEN COUNTY
STATION: 16+01.00 -L-

SHEET 2 OF 3

STATE OF NORTH CAROLINA
DEPARTMENT OF TRANSPORTATION
RALEIGH

PLAN OF 70' UNIT
30'-10" CLEAR ROADWAY
90° SKEW

SPAN A

DOCUMENT NOT CONSIDERED
FINAL UNLESS ALL
SIGNATURES COMPLETED

CDM Smith
CDM SMITH
5400 Glenwood Avenue, Suite 400
Raleigh, NC 27612-3228
NC COA No. F-1255

DRAWN BY : JJR DATE : 10/21
CHECKED BY : THF DATE : 11/21
DESIGN ENGINEER : VDK DATE : 12/21

DWG. No.

NORTH CAROLINA PROFESSIONAL SEAL 047117 ENGINEER VENKATA D. T. KOLLIPARA
DocuSigned by: Venkata D. T. Kollipara
SEAL 047117 ENGINEER
2/9/2022

REVISIONS						SHEET NO.
NO.	BY:	DATE:	NO.	BY:	DATE:	S-07
1			3			TOTAL SHEETS
2			4			15

FILE: SFILES STINKES
DATE: SDATES

STD. NO. 24PCS_33_90S_70L

DocuSign Envelope ID: A36E5F80-8DC5-4767-AA89-7B0A5F9DCF90

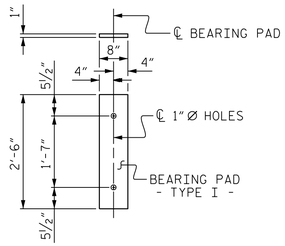

FIXED END
(TYPE I - 22 REQ'D)

ELASTOMERIC BEARING DETAILS

ELASTOMER IN ALL BEARINGS SHALL BE 60 DUROMETER HARDNESS.

DEAD LOAD DEFLECTION AND CAMBER	
	3'-0" x 2'-0"
70' CORED SLAB UNIT	0.6"Ø L.R. STRAND
CAMBER (SLAB ALONE IN PLACE)	2¼" ↑
DEFLECTION DUE TO SUPERIMPOSED DEAD LOAD**	¾" ↓
FINAL CAMBER	1½" ↑

** INCLUDES FUTURE WEARING SURFACE

GRADE 270 STRANDS	
	0.6"Ø L.R.
AREA (SQUARE INCHES)	0.217
ULTIMATE STRENGTH (LBS. PER STRAND)	58,600
APPLIED PRESTRESS (LBS. PER STRAND)	43,950

BILL OF MATERIAL FOR ONE 70' CORED SLAB UNIT							
				EXTERIOR UNIT		INTERIOR UNIT	
BAR	NUMBER	SIZE	TYPE	LENGTH	WEIGHT	LENGTH	WEIGHT
B22	6	#4	STR	24'-6"	98	24'-6"	98
S10	8	#5	3	4'-9"	40	4'-9"	40
S11	144	#4	3	5'-10"	561	5'-10"	561
*S12	79	#5	1	5'-7"	460		
S14	4	#4	3	5'-7"	15	5'-7"	15
S15	4	#5	3	7'-1"	30	7'-1"	30
REINFORCING STEEL			LBS.		744		744
* EPOXY COATED REINFORCING STEEL			LBS.		460		
7000 P.S.I. CONCRETE			CU. YDS.		11.8		11.8
0.6"Ø L.R. STRANDS			No.		28		28

BAR TYPES

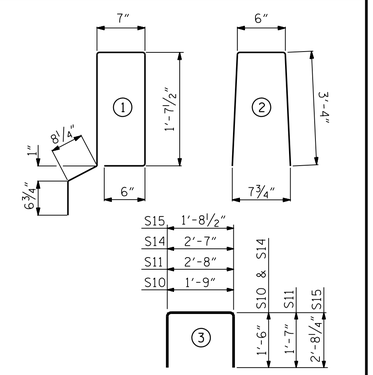

ALL BAR DIMENSIONS ARE OUT TO OUT

NOTES

ALL PRESTRESSING STRANDS SHALL BE 7-WIRE LOW RELAXATION GRADE 270 STRANDS AND SHALL CONFORM TO AASHTO M203 EXCEPT FOR SAMPLING REQUIREMENTS WHICH SHALL BE IN ACCORDANCE WITH THE STANDARD SPECIFICATIONS.

ALL REINFORCING STEEL CAST WITH THE CORED SLAB SECTIONS SHALL BE GRADE 60 AND SHALL BE INCLUDED IN THE UNIT PRICE BID FOR PRESTRESSED CONCRETE CORED SLABS.

RECESSES FOR TRANSVERSE STRANDS SHALL BE GROUTED AFTER THE TENSIONING OF THE STRANDS.

THE 2½"Ø DOWEL HOLES AT FIXED ENDS OF SLAB SECTIONS SHALL BE FILLED WITH NON-SHRINK GROUT.

THE BACKER RODS SHALL CONFORM TO THE REQUIREMENTS OF TYPE M BOND BREAKER. SEE SECTION 1028 OF THE STANDARD SPECIFICATIONS.

WHEN CORED SLABS ARE CAST, AN INTERNAL HOLD-DOWN SYSTEM SHALL BE EMPLOYED TO PREVENT VOIDS FROM RISING OR MOVING SIDEWAYS. AT LEAST SIX WEEKS PRIOR TO CASTING CORED SLABS, THE CONTRACTOR SHALL SUBMIT TO THE ENGINEER FOR REVIEW AND COMMENT, DETAILED DRAWINGS OF THE PROPOSED HOLD-DOWN SYSTEM. IN ADDITION TO STRUCTURAL DETAILS, LOCATION AND SPACING OF THE HOLD-DOWNS SHALL BE INDICATED.

THE TRANSFER OF LOAD FROM THE ANCHORAGES TO THE CORED SLAB UNIT SHALL BE DONE WHEN THE CONCRETE HAS REACHED A COMPRESSIVE STRENGTH OF NOT LESS THAN THE REQUIRED STRENGTH SHOWN IN THE "CONCRETE RELEASE STRENGTH" TABLE.

ALL REINFORCING STEEL IN VERTICAL CONCRETE BARRIER RAILS SHALL BE EPOXY COATED.

PRESTRESSING STRANDS SHALL BE CUT FLUSH WITH CORED SLAB UNIT ENDS.

APPLY EPOXY PROTECTIVE COATING TO CORED SLAB UNIT ENDS.

GROOVED CONTRACTION JOINTS, ½" IN DEPTH, SHALL BE TOOLED IN ALL EXPOSED FACES OF THE BARRIER RAIL AND IN ACCORDANCE WITH ARTICLE 825-10(B) OF THE STANDARD SPECIFICATIONS. A CONTRACTION JOINT SHALL BE LOCATED AT EACH THIRD POINT BETWEEN BARRIER RAIL EXPANSION JOINTS. ONLY ONE CONTRACTION JOINT IS REQUIRED AT MIDPOINT OF BARRIER RAIL SEGMENTS LESS THAN 20 FEET IN LENGTH AND NO CONTRACTION JOINTS ARE REQUIRED FOR THOSE SEGMENTS LESS THAN 10 FEET IN LENGTH.

FLAME CUTTING OF THE TRANSVERSE POST-TENSIONING STRAND IS NOT ALLOWED.

MAINTAIN A SYMMETRIC TENSION FORCE BETWEEN EACH PAIR OF TRANSVERSE POST TENSIONING STRANDS IN THE DIAPHRAGM.

THE #4 S11 STIRRUPS MAY BE SHIFTED AS NECESSARY TO MAINTAIN 1" CLEAR TO THE GROUTED RECESS.

FOR GROUT FOR STRUCTURES, SEE SPECIAL PROVISIONS.

THE PERMITTED THREADED INSERTS ARE DETAILED AS AN OPTION FOR THE CONTRACTOR TO ATTACH FALSEWORK AND FORMWORK DURING CONSTRUCTION.

THE PERMITTED THREADED INSERTS IN THE EXTERIOR UNITS SHALL BE SIZED BY THE CONTRACTOR, SPACED AT 4'-0" CENTERS AND GALVANIZED IN ACCORDANCE WITH SECTION 1076 OF THE STANDARD SPECIFICATIONS. STAINLESS STEEL THREADED INSERTS MAY BE USED AS AN ALTERNATE.

THE PERMITTED THREADED INSERTS SHALL BE GROUTED BY THE CONTRACTOR IMMEDIATELY FOLLOWING REMOVAL OF THE FALSEWORK.

THE COST OF THE PERMITTED THREADED INSERTS SHALL BE INCLUDED IN THE PRICE BID FOR THE PRECAST UNITS.

CORED SLABS REQUIRED			
	NUMBER	LENGTH	TOTAL LENGTH
70' UNIT			
EXTERIOR C.S.	2	70'-0"	140'-0"
INTERIOR C.S.	9	70'-0"	630'-0"
TOTAL	11		770'-0"

CONCRETE RELEASE STRENGTH	
UNIT	PSI
70' UNIT	5500

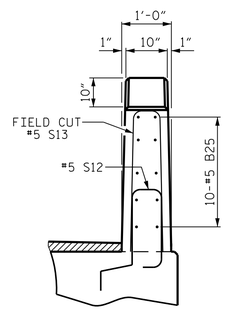

END VIEW

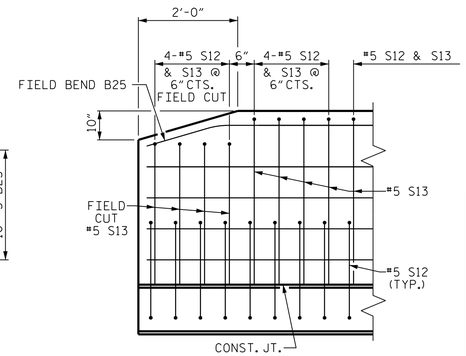

SIDE VIEW

END OF RAIL DETAILS

GUTTERLINE ASPHALT THICKNESS & RAIL HEIGHT		
	ASPHALT OVERLAY THICKNESS	RAIL HEIGHT
	@ MID-SPAN	@ MID-SPAN
70' UNIT	2"	3'-8"

BILL OF MATERIAL FOR VERTICAL CONCRETE BARRIER RAIL						
BAR	BARS PER PAIR OF EXTERIOR UNITS	TOTAL NO.	SIZE	TYPE	LENGTH	WEIGHT
	70' UNIT					
*B25	60	60	#5	STR	22'-11"	1434
*S13	158	158	#5	2	7'-2"	1181
* EPOXY COATED REINFORCING STEEL				LBS.		2615
CLASS AA CONCRETE				CU.YDS.		18.1
TOTAL VERTICAL CONCRETE BARRIER RAIL				LN. FT.		140.0

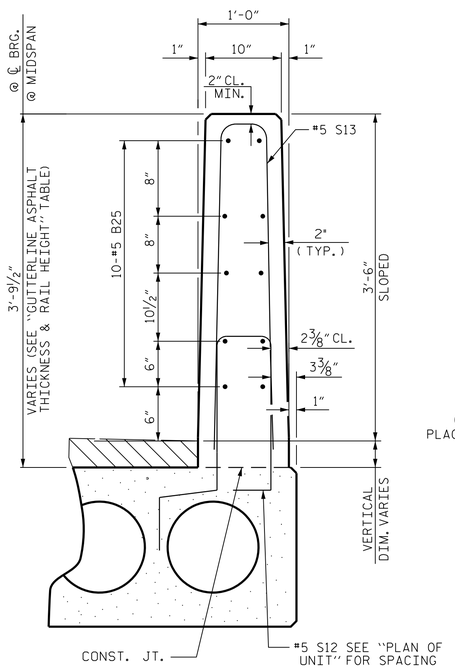

SECTION THRU RAIL

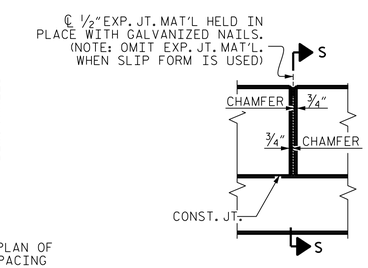

ELEVATION AT EXPANSION JOINTS

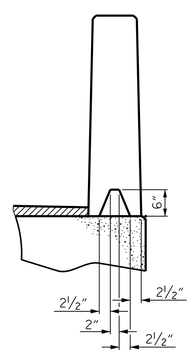

SECTION S-S
AT DAM IN OPEN JOINT
(THIS IS TO BE USED ONLY WHEN SLIP FORM IS USED)

VERTICAL CONCRETE BARRIER RAIL SECTION

ANCHOR BOLTS NOTES

ANCHOR BOLTS SHALL MEET THE REQUIREMENTS OF ASTM A449. NUTS SHALL MEET THE REQUIREMENTS OF AASHTO M291-DH OR AASHTO M292-2H. WASHERS SHALL MEET THE REQUIREMENTS OF AASHTO M293. SHOP DRAWINGS ARE NOT REQUIRED FOR ANCHOR BOLTS, NUTS, WASHERS AND PLATES. SHOP INSPECTION IS REQUIRED.

NUTS FOR ANCHOR BOLTS ARE TO BE TIGHTENED FINGER TIGHT AND THEN BACKED OFF ½ TURN. THE THREAD OF THE NUT AND BOLT SHALL THEN BE BURRED WITH A SHARP POINTED TOOL.

ANCHOR BOLTS, NUTS, WASHERS AND PLATES "P1" SHALL BE GALVANIZED IN ACCORDANCE WITH STANDARD SPECIFICATIONS.

THE TWO 2½"Ø ANCHOR BOLT HOLES AT BOTH ENDS OF EACH CORED SLAB UNIT SHALL BE FILLED WITH NON-SHRINK GROUT.

THE VERTICAL FACES OF THE ANCHOR BOLT BLOCKOUTS SHALL BE FINISHED WITH A ROUGH SURFACE.

ANCHOR BOLT BLOCKOUTS SHALL BE FILLED WITH NON-SHRINK GROUT AFTER TIGHTENING OF THE ANCHOR BOLTS AND PRIOR TO PLACEMENT OF ASPHALT WEARING SURFACE.

THE #4S10 AND #4S12 BARS MAY BE SHIFTED AS NECESSARY TO MAINTAIN A 1" CLEARANCE TO THE ANCHOR BOLT BLOCKOUT.

PAYMENT FOR ANCHOR BOLTS, NUTS, WASHERS AND PLATES SHALL BE INCLUDED IN PRESTRESSED CONCRETE CORED SLAB UNITS PAY ITEM.

PROJECT NO. BP2.R019.1
CRAVEN COUNTY
STATION: 16+01.00 -L-

SHEET 3 OF 3

DOCUMENT NOT CONSIDERED FINAL UNLESS ALL SIGNATURES COMPLETED

CDM Smith
CDM SMITH
5400 Glenwood Avenue, Suite 400
Raleigh, NC 27612-3228
NC COA No. F-1255

DRAWN BY : JJR DATE : 10/21
CHECKED BY : THF DATE : 11/21
DESIGN ENGINEER : VDK DATE : 12/21

DWG. No.

NORTH CAROLINA PROFESSIONAL SEAL 047117 ENGINEER VENKATA D. T. KOLLIPARA
DocuSigned by: Venkata D. T. Kollipara
-BEA4A61FC5B9495...
2/9/2022

STATE OF NORTH CAROLINA
DEPARTMENT OF TRANSPORTATION
RALEIGH

3'-0" X 2'-0" PRESTRESSED CONCRETE CORED SLAB UNIT 90 ° SKEW

REVISIONS						SHEET NO.
NO.	BY:	DATE:	NO.	BY:	DATE:	S-08
1			3			TOTAL SHEETS
2			4			15

FILE: $FILES
DATE: $DATES
STIMES

STD. NO. 24PCS3_33_90S

DocuSign Envelope ID: A36E5F80-8DC5-4767-AA89-7B0A5F9DCF90

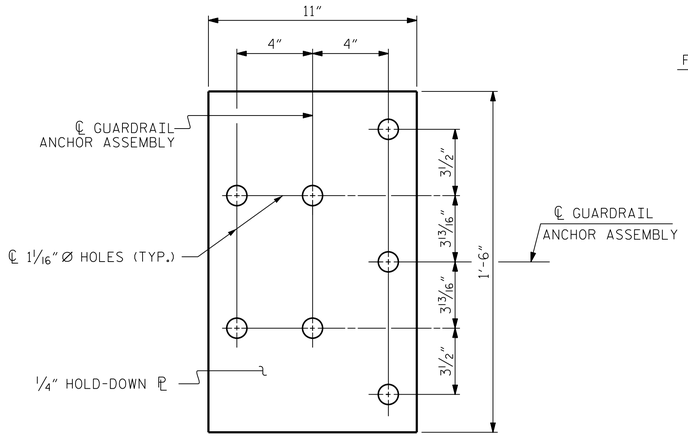

PLAN

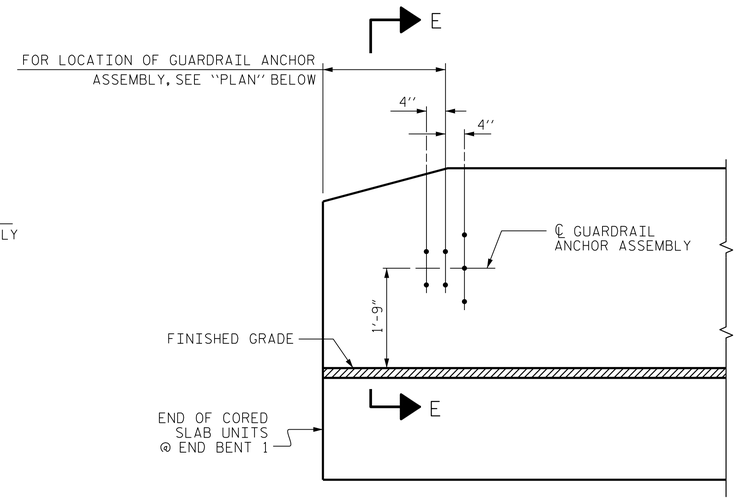

ELEVATION

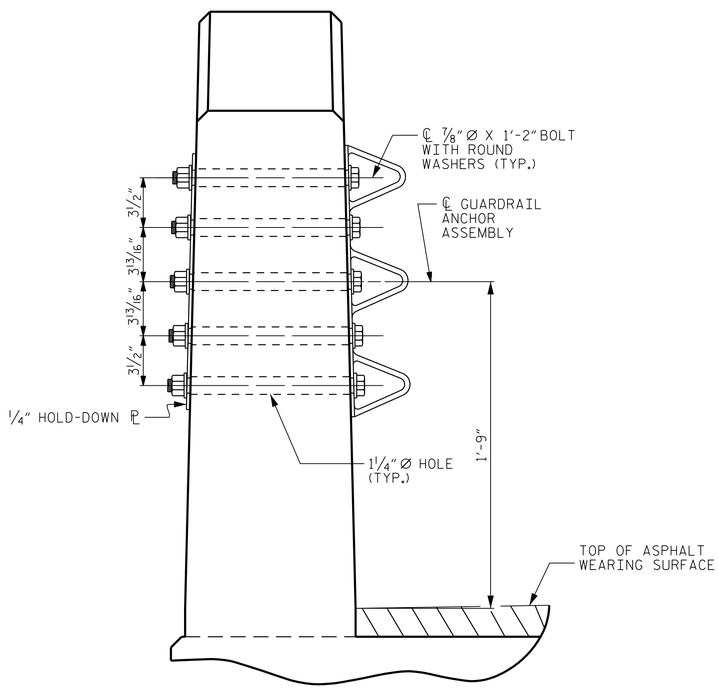

SECTION E-E

GUARDRAIL ANCHOR ASSEMBLY DETAILS

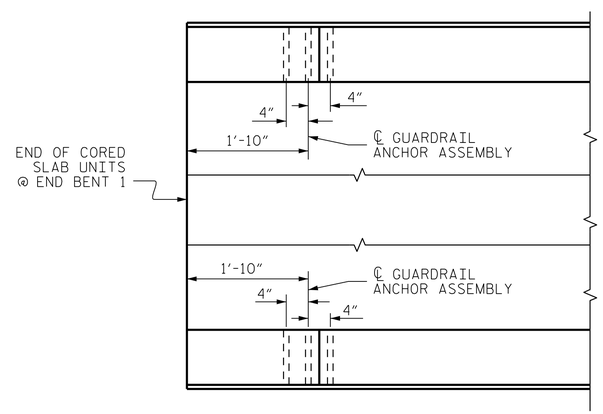

PLAN

LOCATION OF ANCHORS FOR GUARDRAIL

END BENT 1 SHOWN, END BENT 2 SIMILAR.

NOTES

THE GUARDRAIL ANCHOR ASSEMBLY SHALL CONSIST OF A 1/4" HOLD DOWN PLATE AND 7 - 7/8" Ø BOLTS WITH NUTS AND WASHERS.

THE HOLD-DOWN PLATE SHALL CONFORM TO AASHTO M270 GRADE 36. AFTER FABRICATION, THE HOLD-DOWN PLATE SHALL BE HOT-DIP GALVANIZED IN ACCORDANCE WITH AASHTO M111.

BOLTS SHALL CONFORM TO THE REQUIREMENTS OF ASTM A307 AND NUTS SHALL CONFORM TO THE REQUIREMENTS OF AASHTO M291. BOLTS, NUTS AND WASHERS SHALL BE GALVANIZED. (AT THE CONTRACTOR'S OPTION, STAINLESS STEEL BOLTS, NUTS AND WASHERS MAY BE USED AS AN ALTERNATE FOR THE 7/8" Ø GALVANIZED BOLTS, NUTS AND WASHERS. THEY SHALL CONFORM TO OR EXCEED THE MECHANICAL REQUIREMENTS OF ASTM A307. THE USE OF THIS ALTERNATE SHALL BE APPROVED BY THE ENGINEER.)

THE GUARDRAIL ANCHOR ASSEMBLY IS REQUIRED AT ALL POINTS WHERE APPROACH GUARDRAIL IS TO BE ATTACHED TO THE END OF BARRIER RAIL. FOR POINTS OF ATTACHMENT, SEE SKETCH.

AFTER INSTALLATION, THE EXPOSED THREAD OF THE BOLT SHALL BE BURRED WITH A SHARP POINTED TOOL.

THE COST OF THE GUARDRAIL ANCHOR ASSEMBLY SHALL BE INCLUDED IN THE UNIT CONTRACT PRICE BID FOR VERTICAL CONCRETE BARRIER RAIL.

THE VERTICAL REINFORCING BARS MAY BE SHIFTED SLIGHTLY IN THE VERTICAL CONCRETE BARRIER RAIL TO CLEAR ASSEMBLY BOLTS.

THE 1 1/4" Ø HOLES SHALL BE FORMED OR DRILLED WITH A CORE BIT. IMPACT TOOLS WILL NOT BE PERMITTED. ANY CONCRETE DAMAGED BY THIS WORK SHALL BE REPAIRED TO THE SATISFACTION OF THE ENGINEER.

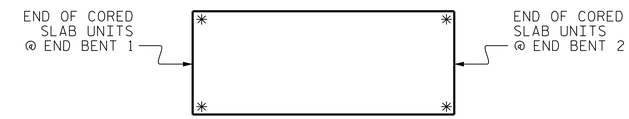

SKETCH SHOWING POINTS OF ATTACHMENT

✳ DENOTES GUARDRAIL ANCHOR ASSEMBLY

PROJECT NO. BP2.R019.1
CRAVEN COUNTY
STATION: 16+01.00 -L-

DOCUMENT NOT CONSIDERED FINAL UNLESS ALL SIGNATURES COMPLETED

CDM Smith
CDM SMITH
5400 Glenwood Avenue, Suite 400
Raleigh, NC 27612-3228
NC COA No. F-1255

DRAWN BY : JJR DATE : 10/21
CHECKED BY : THF DATE : 11/21
DESIGN ENGINEER : VDK DATE : 12/21

DWG. No.

NORTH CAROLINA PROFESSIONAL SEAL 047117 ENGINEER VENKATA D. T. KOLLIPARA
DocuSigned by: Venkata D. T. Kollipara
SEA4AE19C5EB4A5...
2/9/2022

STATE OF NORTH CAROLINA
DEPARTMENT OF TRANSPORTATION
RALEIGH

SUPERSTRUCTURE

STANDARD GUARDRAIL ANCHORAGE FOR VERTICAL CONCRETE BARRIER RAIL

REVISIONS								SHEET NO.
NO.	BY:	DATE:	NO.	BY:	DATE:			S-09
1			3					TOTAL SHEETS
2			4					15

FILE: SFILES $TIMES
DATE: $DATES

STD. NO. GRA3

DocuSign Envelope ID: A36E5F80-8DC5-4767-AA89-7B0A5F9DCF90

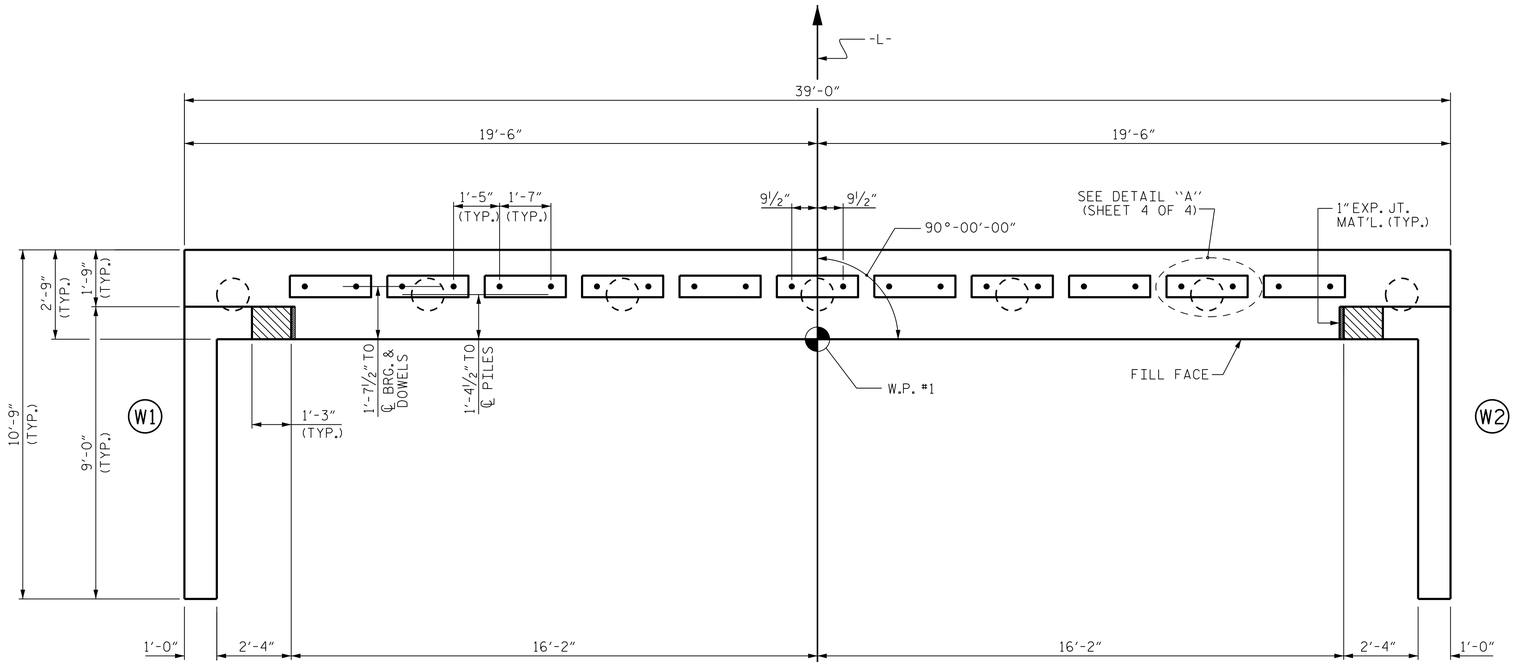

PLAN

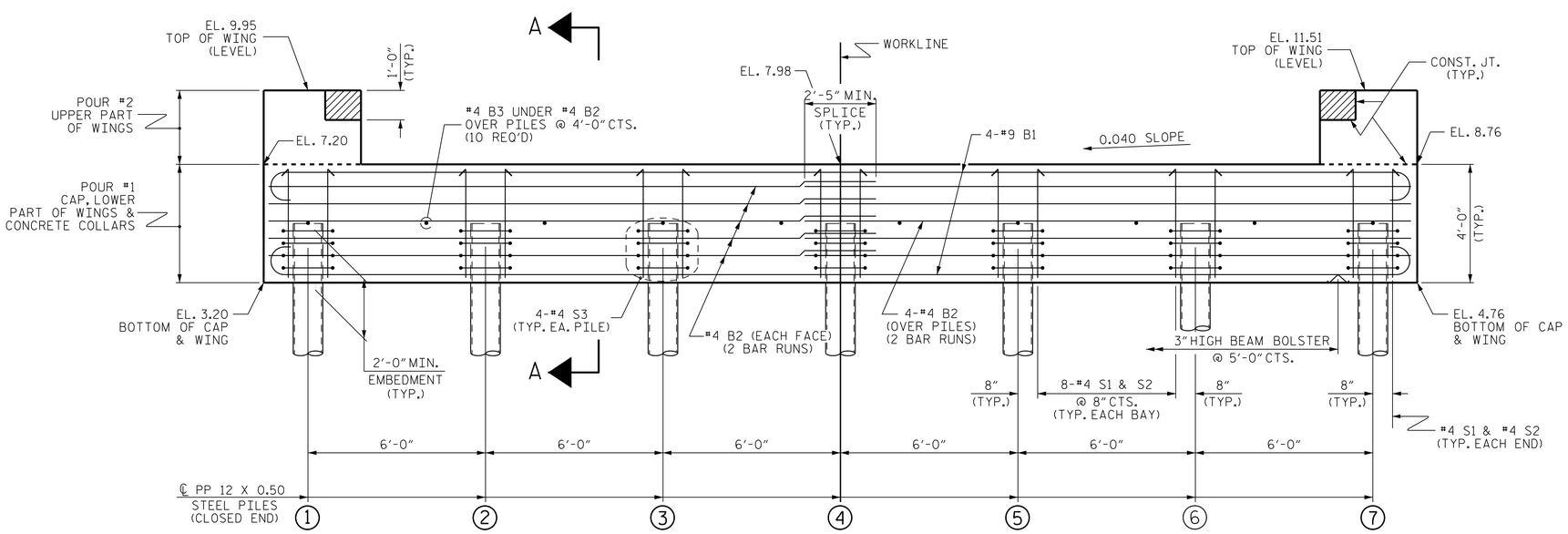

ELEVATION

WINGS NOT SHOWN FOR CLARITY.
FOR SECTION A-A, SEE SHEET 4 OF 4.
CONCRETE COLLARS FOR STEEL PILES NOT SHOWN IN PLAN AND ELEVATION VIEWS FOR CLARITY.
SEE "CORROSION PROTECTION FOR STEEL PILES DETAIL", SHEET 4 OF 4.

NOTES

STIRRUPS IN CAP MAY BE SHIFTED AS NECESSARY TO CLEAR ANCHOR BOLTS.

THE CONCRETE IN THE SHADED AREA OF THE WING SHALL BE POURED AFTER THE VERTICAL CONCRETE BARRIER RAIL IS CAST IF SLIP FORMING IS USED.

FOR STEEL PIPE PILE SPLICE AND PLATES DETAILS, SEE SHEET 4 OF 4.

FOR WING DETAILS, SEE SHEET 3 OF 4.

TOP OF PILE ELEVATIONS	
1	5.28
2	5.52
3	5.76
4	6.00
5	6.24
6	6.48
7	6.72

PROJECT NO. BP2.R019.1
CRAVEN COUNTY
STATION: 16+01.00 -L-

SHEET 1 OF 4

DOCUMENT NOT CONSIDERED FINAL UNLESS ALL SIGNATURES COMPLETED

CDM Smith
CDM SMITH
5400 Glenwood Avenue, Suite 400
Raleigh, NC 27612-3228
NC COA No. F-1255

DRAWN BY :	JJR	DATE :	10/21
CHECKED BY :	THF	DATE :	11/21
DESIGN ENGINEER :	VDK	DATE :	12/21

DWG. No.

NORTH CAROLINA PROFESSIONAL SEAL 047117 ENGINEER VENKATA D. T. KOLLIPARA
DocuSigned by: Venkata D. T. Kollipara
9EAAA619C65B465...
2/9/2022

STATE OF NORTH CAROLINA
DEPARTMENT OF TRANSPORTATION
RALEIGH

SUBSTRUCTURE

END BENT 1

REVISIONS						
NO.	BY:	DATE:	NO.	BY:	DATE:	
1			3			
2			4			

SHEET NO. S-10
TOTAL SHEETS 15

FILE: SFILES
DATE: $DATE$ $TIME$

STD. NO. EB_33_90S4

DocuSign Envelope ID: A36E5F80-8DC5-4767-AA89-7B0A5F9DCF90

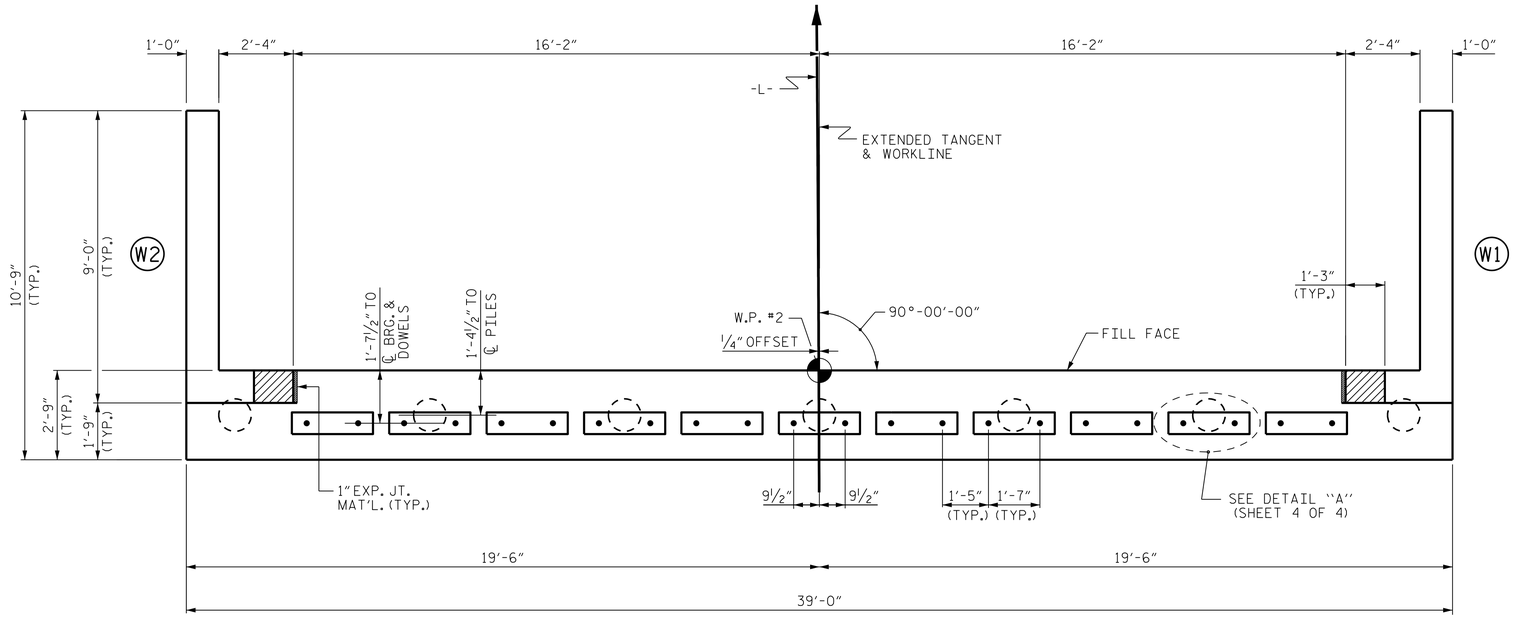

PLAN

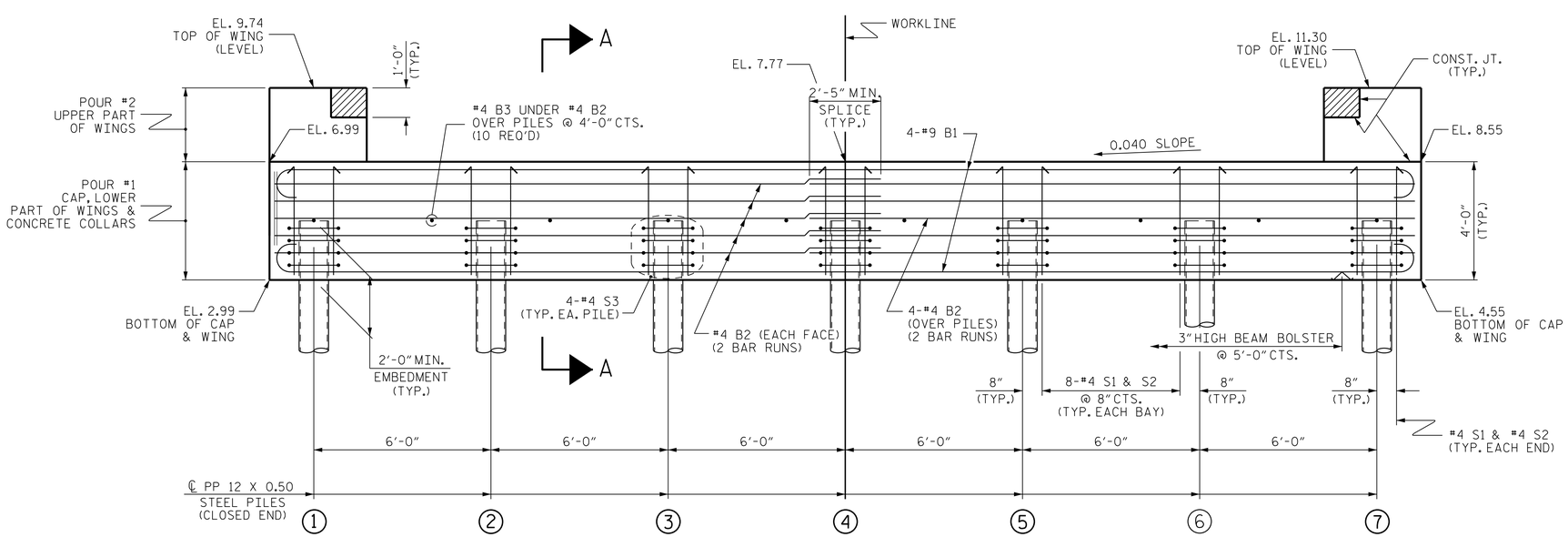

ELEVATION

WINGS NOT SHOWN FOR CLARITY.
FOR SECTION A-A, SEE SHEET 4 OF 4.
CONCRETE COLLARS FOR STEEL PILES NOT SHOWN IN PLAN AND ELEVATION VIEWS FOR CLARITY.
SEE "CORROSION PROTECTION FOR STEEL PILES DETAIL", SHEET 4 OF 4.

NOTES

FOR NOTES, SEE SHEET 1 OF 4.

12" STEEL PIPE PILE NOTES

PIPE PILES SHALL BE IN ACCORDANCE WITH SECTION 1084 OF THE STANDARD SPECIFICATIONS.

PIPE PILE PLATES, IF REQUIRED, SHALL BE IN ACCORDANCE WITH SECTION 450 OF THE STANDARD SPECIFICATIONS.

REMOVE AND REPLACE OR REPAIR TO THE SATISFACTION OF THE ENGINEER PILES THAT ARE DAMAGED, DEFORMED OR COLLAPSED DURING INSTALLATION OR DRIVING.

PILE SPLICES SHALL BE IN ACCORDANCE WITH THE STANDARD SPECIFICATIONS AND AWS D1.1.

FOR CLOSED END PIPE PILES, REMOVE ALL SOIL AND WATER FROM INSIDE THE PILES JUST PRIOR TO PLACING CONCRETE FOR THE CONCRETE PLUG.

THE CONTRACTOR MAY PROPOSE AN ALTERNATE METHOD FOR PLUGGING THE STEEL PIPE PILE. SUBJECT TO APPROVAL BY THE ENGINEER.

THE CLASS A CONCRETE IN PLUG IS CONSIDERED INCIDENTAL TO THE CONTRACT UNIT PRICE BID PER LINEAR FOOT FOR PP 12 X 0.50 STEEL PILES.

TOP OF PILE ELEVATIONS	
1	5.07
2	5.31
3	5.55
4	5.79
5	6.03
6	6.26
7	6.50

PROJECT NO. BP2.R019.1
CRAVEN COUNTY
STATION: 16+01.00 -L-

SHEET 2 OF 4

DOCUMENT NOT CONSIDERED FINAL UNLESS ALL SIGNATURES COMPLETED

CDM Smith
CDM SMITH
5400 Glenwood Avenue, Suite 400
Raleigh, NC 27612-3228
NC COA No. F-1255

DRAWN BY : JJR DATE : 10/21
CHECKED BY : THF DATE : 11/21
DESIGN ENGINEER : VDK DATE : 12/21

DWG. No.

NORTH CAROLINA PROFESSIONAL SEAL 047117 ENGINEER VENKATA D. T. KOLLIPARA

DocuSigned by: Venkata D. T. Kollipara
REMARKS/COMMENTS 2/9/2022

STATE OF NORTH CAROLINA
DEPARTMENT OF TRANSPORTATION
RALEIGH

SUBSTRUCTURE

END BENT 2

REVISIONS						SHEET NO.
NO.	BY:	DATE:	NO.	BY:	DATE:	S-11
1			3			TOTAL SHEETS
2			4			15

FILE: SPILES
DATE: SDATES
STIMES

STD. NO. EB_33_90S4

DocuSign Envelope ID: A36E5F80-8DC5-4767-AA89-7B0A5F9DCF90

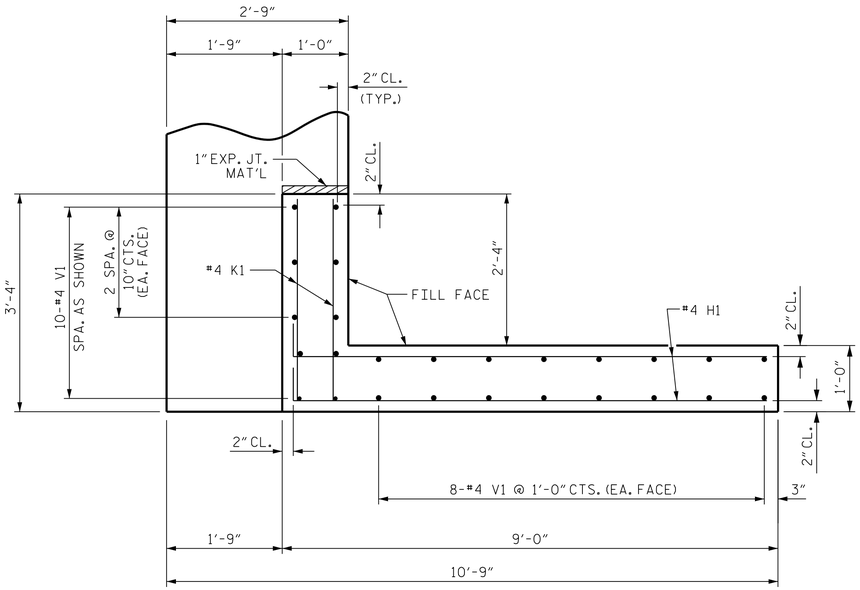

PLAN OF WING (W1)

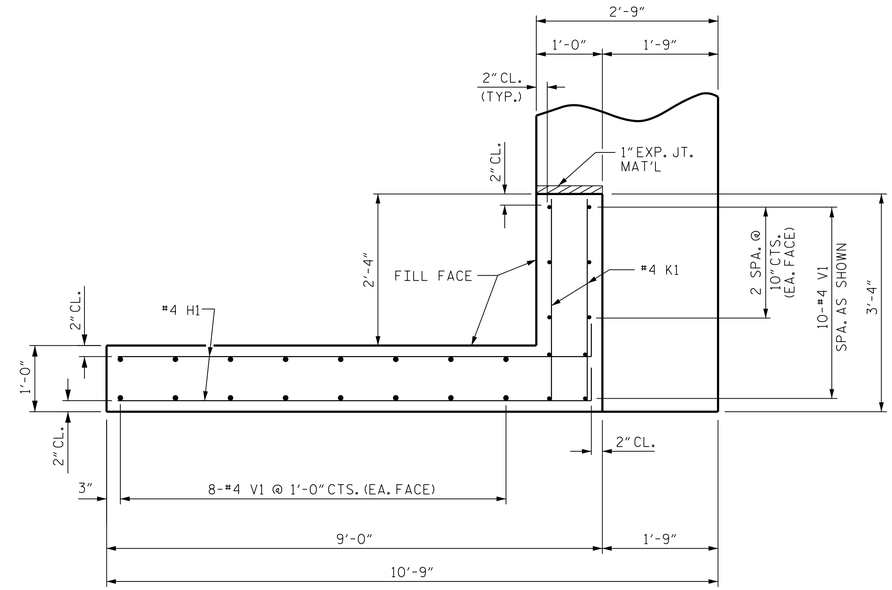

PLAN OF WING (W2)

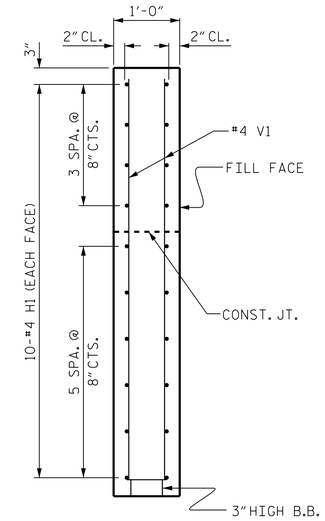

SECTION X-X

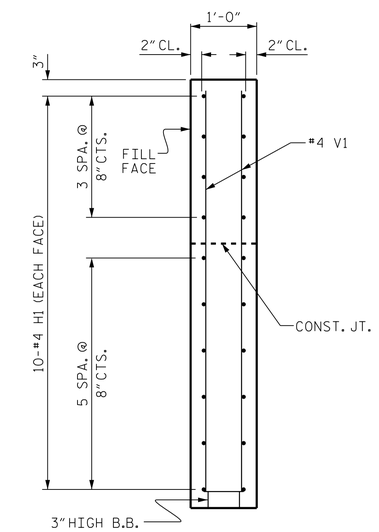

SECTION Y-Y

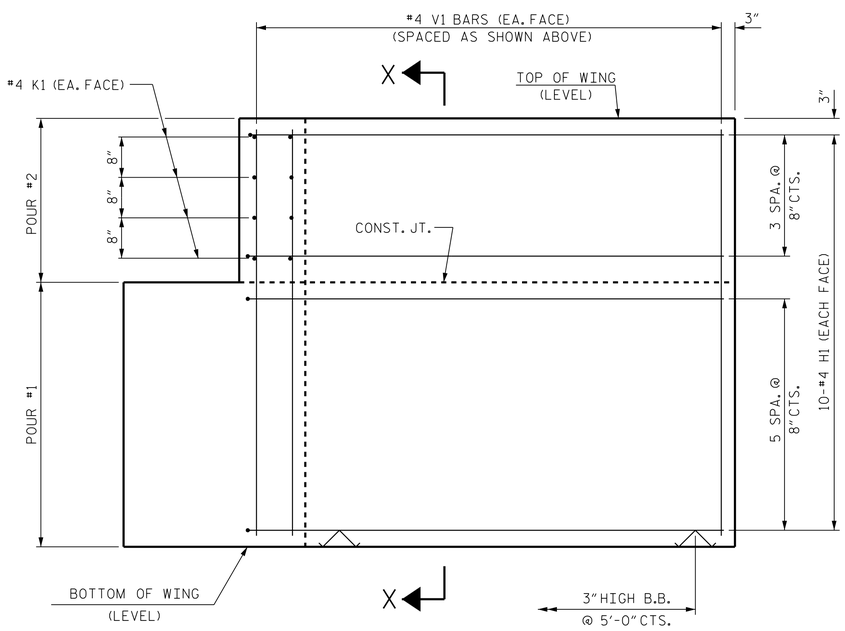

ELEVATION OF WING (W1)

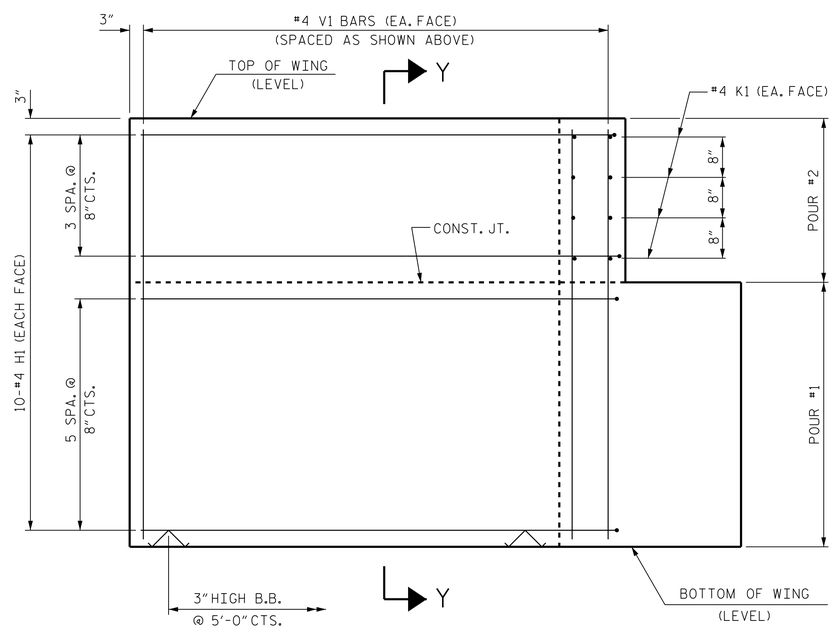

ELEVATION OF WING (W2)

WING DETAILS

PROJECT NO. BP2.R019.1
CRAVEN COUNTY
STATION: 16+01.00 -L-

SHEET 3 OF 4

DOCUMENT NOT CONSIDERED FINAL UNLESS ALL SIGNATURES COMPLETED

CDM Smith
CDM SMITH
5400 Glenwood Avenue, Suite 400
Raleigh, NC 27612-3228
NC COA No. F-1255

DRAWN BY : JJR DATE : 10/21
CHECKED BY : THF DATE : 11/21
DESIGN ENGINEER : VDK DATE : 12/21

DWG. No.

NORTH CAROLINA PROFESSIONAL SEAL 047117 ENGINEER VENKATA D. T. KOLLIPARA

DocuSigned by: Venkata D. T. Kollipara
9EAA4d16C58B450...
2/9/2022

STATE OF NORTH CAROLINA
DEPARTMENT OF TRANSPORTATION
RALEIGH

SUBSTRUCTURE

END BENTS 1 & 2
WING DETAILS

REVISIONS						SHEET NO.
NO.	BY:	DATE:	NO.	BY:	DATE:	S-12
1			3			TOTAL SHEETS
2			4			15

FILE: SFILES
DATE: SDATES
STIMES

STD. NO. EB_33_90S4

DocuSign Envelope ID: A36E5F80-8DC5-4767-AA89-7B0A5F9DCF90

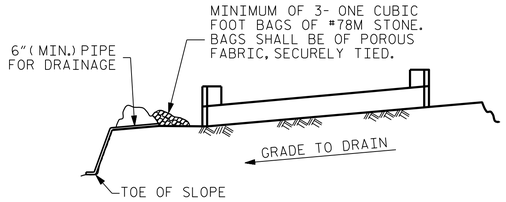

BAGGED STONE AND PIPE SHALL BE PLACED IMMEDIATELY AFTER COMPLETION OF END BENT EXCAVATION. PIPE MAY BE EITHER CONCRETE, CORRUGATED STEEL, CORRUGATED ALUMINUM ALLOY, OR CORRUGATED PLASTIC. PERFORATED PIPE WILL NOT BE ALLOWED.

BAGGED STONE SHALL REMAIN IN PLACE UNTIL THE ENGINEER DIRECTS THAT IT BE REMOVED. THE CONTRACTOR SHALL REMOVE AND DISPOSE OF SILT ACCUMULATIONS AT BAGGED STONE WHEN SO DIRECTED BY THE ENGINEER. BAGS SHALL BE REMOVED AND REPLACED WHENEVER THE ENGINEER DETERMINES THAT THEY HAVE DETERIORATED AND LOST THEIR EFFECTIVENESS.

NO SEPARATE PAYMENT WILL BE MADE FOR THIS WORK AND THE ENTIRE COST OF THIS WORK SHALL BE INCLUDED IN THE UNIT CONTRACT PRICE BID FOR THE SEVERAL PAY ITEMS.

TEMPORARY DRAINAGE AT END BENT

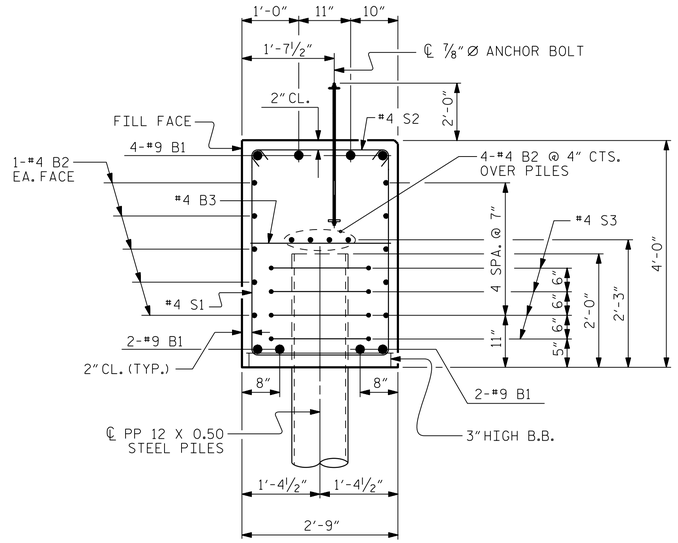

SECTION A-A

(CONCRETE COLLAR NOT SHOWN FOR CLARITY. SEE "CORROSION PROTECTION FOR STEEL PILES DETAIL.") FOR ⅞"Ø ANCHOR BOLTS DETAILS, SEE SHEET S-05.

BAR TYPES

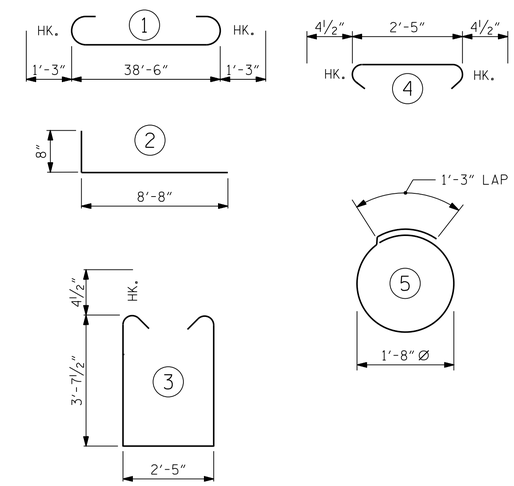

ALL BAR DIMENSIONS ARE OUT TO OUT.

BILL OF MATERIAL

FOR ONE END BENT

(2 REQUIRED)

BAR	NO.	SIZE	TYPE	LENGTH	WEIGHT
B1	8	#9	1	41'-0"	1115
B2	28	#4	STR	20'-7"	385
B3	10	#4	STR	2'-5"	16
H1	40	#4	2	9'-4"	249
K1	16	#4	STR	2'-11"	31
S1	50	#4	3	10'-5"	348
S2	50	#4	4	3'-2"	106
S3	28	#4	5	6'-6"	122
V1	52	#4	STR	6'-5"	223

REINFORCING STEEL 2596 LBS.

CLASS A CONCRETE BREAKDOWN:

POUR #1	CAP, LOWER PART OF WINGS & COLLARS	19.5 C.Y.
POUR #2	UPPER PART OF WINGS	2.3 C.Y.
	TOTAL	21.8 C.Y.

⅞"Ø ANCHOR BOLTS	EA. 22
EMBEDDED WASHERS, NUTS & PLATES	EA. 44

FOR PAYMENT FOR ANCHOR BOLTS, NUTS, WASHERS AND PLATES, SEE NOTE ON SHEET S-08.

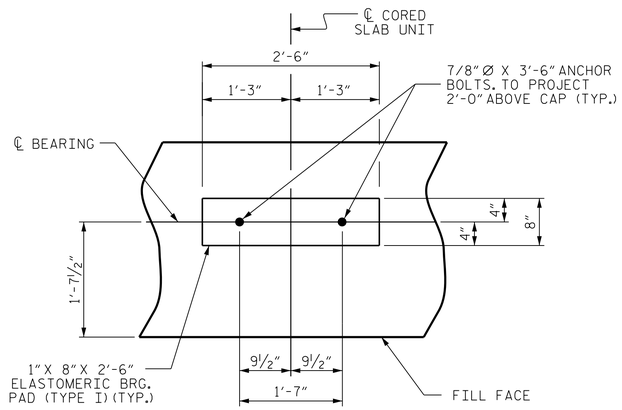

DETAIL "A"

(END BENT 1 SHOWN, END BENT 2 SIMILAR BY ROTATION)

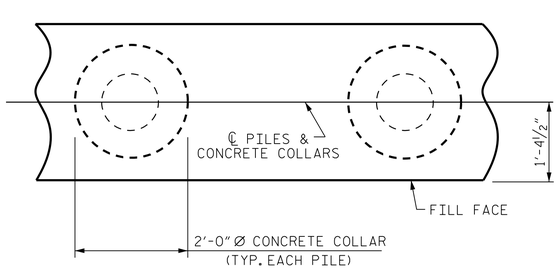

PLAN

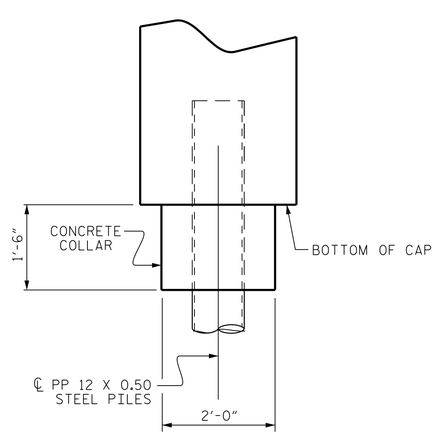

ELEVATION

CORROSION PROTECTION FOR STEEL PILES DETAIL

(END BENT 1 SHOWN, END BENT 2 SIMILAR BY ROTATION)

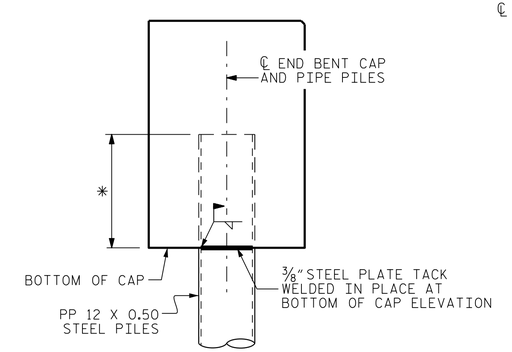

* 2'-0" EMBEDMENT TO BE FILLED WITH CONCRETE

PIPE PILE IN END BENT DETAIL

TYPICAL FOR ALL STEEL PIPE PILES

FOR 12" STEEL PIPE PILE NOTES, SEE SHEET 2 OF 4.

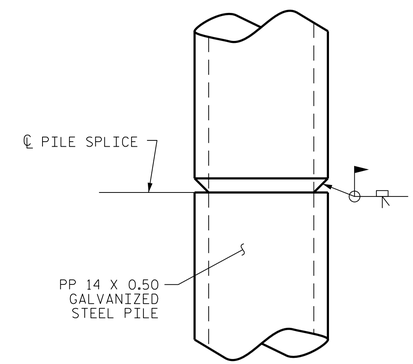

PIPE PILE SPLICE DETAIL

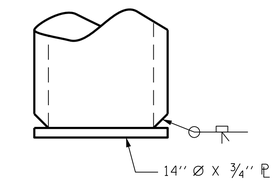

PIPE PILE PLATE DETAIL

(CLOSED END)

PROJECT NO. BP2.R019.1

CRAVEN COUNTY

STATION: 16+01.00 -L-

SHEET 4 OF 4

STATE OF NORTH CAROLINA
DEPARTMENT OF TRANSPORTATION
RALEIGH

SUBSTRUCTURE

END BENTS 1 & 2 DETAILS

DOCUMENT NOT CONSIDERED FINAL UNLESS ALL SIGNATURES COMPLETED

CDM Smith
CDM SMITH
5400 Glenwood Avenue, Suite 400
Raleigh, NC 27612-3228
NC COA No. F-1255

DRAWN BY : JJR DATE : 10/21
CHECKED BY : THF DATE : 11/21
DESIGN ENGINEER : VDK DATE : 12/21

DWG. No.

NORTH CAROLINA PROFESSIONAL SEAL 047117 ENGINEER VENKATA D. T. KOLLIPARA
Docusigned by: Venkata D. T. Kollipara
SEAL/SIGNATURE 2/9/2022

REVISIONS							
NO.	BY:	DATE:	NO.	BY:	DATE:		
1			3				
2			4				

SHEET NO. S-13
TOTAL SHEETS 15

FILE: SFILES STANES
DATE: SDATES

STD. NO. EB_33_90S4

DocuSign Envelope ID: A36E5F80-8DC5-4767-AA89-7B0A5F9DCF90

ESTIMATED QUANTITIES		
BRIDGE @ STA. 16+01.00 -L-	RIP RAP CLASS II	GEOTEXTILE FOR DRAINAGE
	TONS	SQUARE YARDS
END BENT 1	230	255
END BENT 2	293	325
TOTAL	523	580

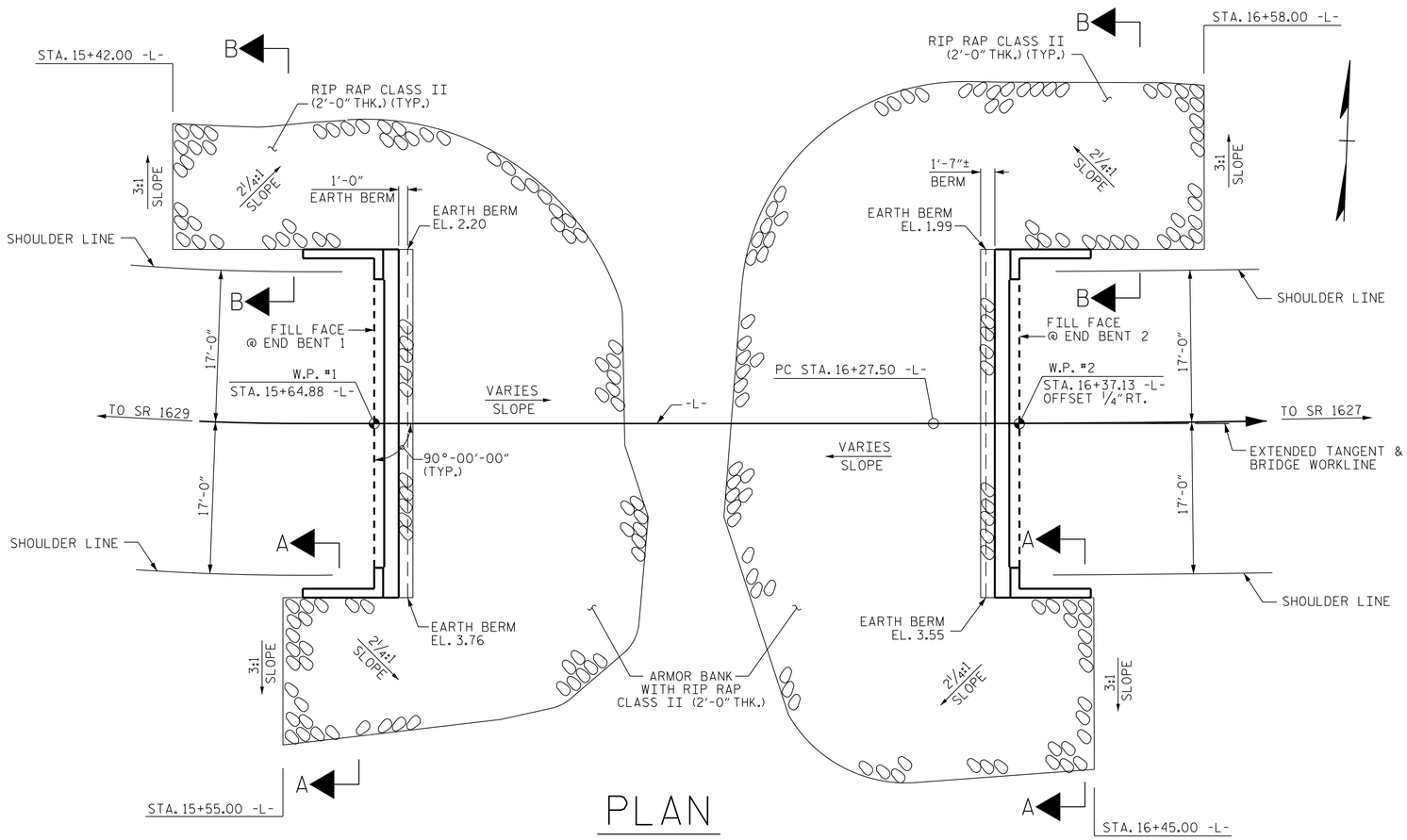

END BENT 1

PLAN

THE CONTRACTOR'S ATTENTION IS CALLED TO THE FACT THAT THE RIP RAP CLASS II SHOULD BE MADE OF GRANITE.

END BENT 2

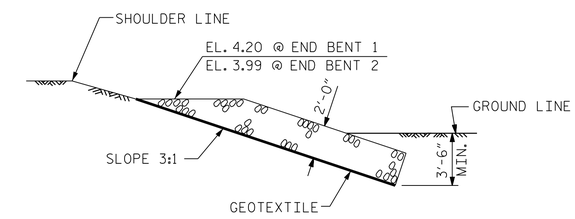

SECTION B-B

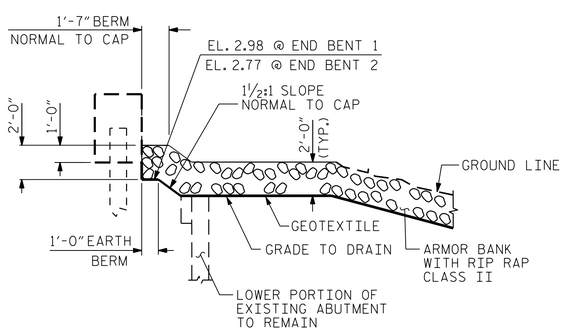

℄ SECTION @ END BENTS

BERM RIP RAPPED

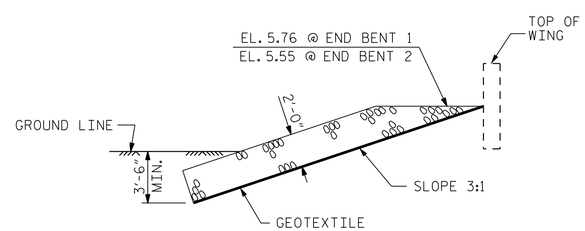

SECTION A-A

PROJECT NO. BP2.R019.1
CRAVEN COUNTY
STATION: 16+01.00 -L-

STATE OF NORTH CAROLINA
DEPARTMENT OF TRANSPORTATION
RALEIGH

STANDARD

RIP RAP DETAILS

DOCUMENT NOT CONSIDERED FINAL UNLESS ALL SIGNATURES COMPLETED

CDM Smith
CDM SMITH
5400 Glenwood Avenue, Suite 400
Raleigh, NC 27612-3228
NC COA No. F-1255

DRAWN BY : JJR DATE : 10/21
CHECKED BY : THF DATE : 11/21
DESIGN ENGINEER : VDK DATE : 12/21

DWG. No.

NORTH CAROLINA PROFESSIONAL SEAL 047117 ENGINEER VENKATA D. T. KOLLIPARA
Venkata D. T. Kollipara
SEAAAB7BC5B4A9E...
2/9/2022

REVISIONS						
NO.	BY:	DATE:	NO.	BY:	DATE:	
1			3			
2			4			

SHEET NO. S-14
TOTAL SHEETS 15

FILE: SFILES
DATE: SDATES
STAMES

DocuSign Envelope ID: A36E5F80-8DC5-4767-AA89-7B0A5F9DCF90

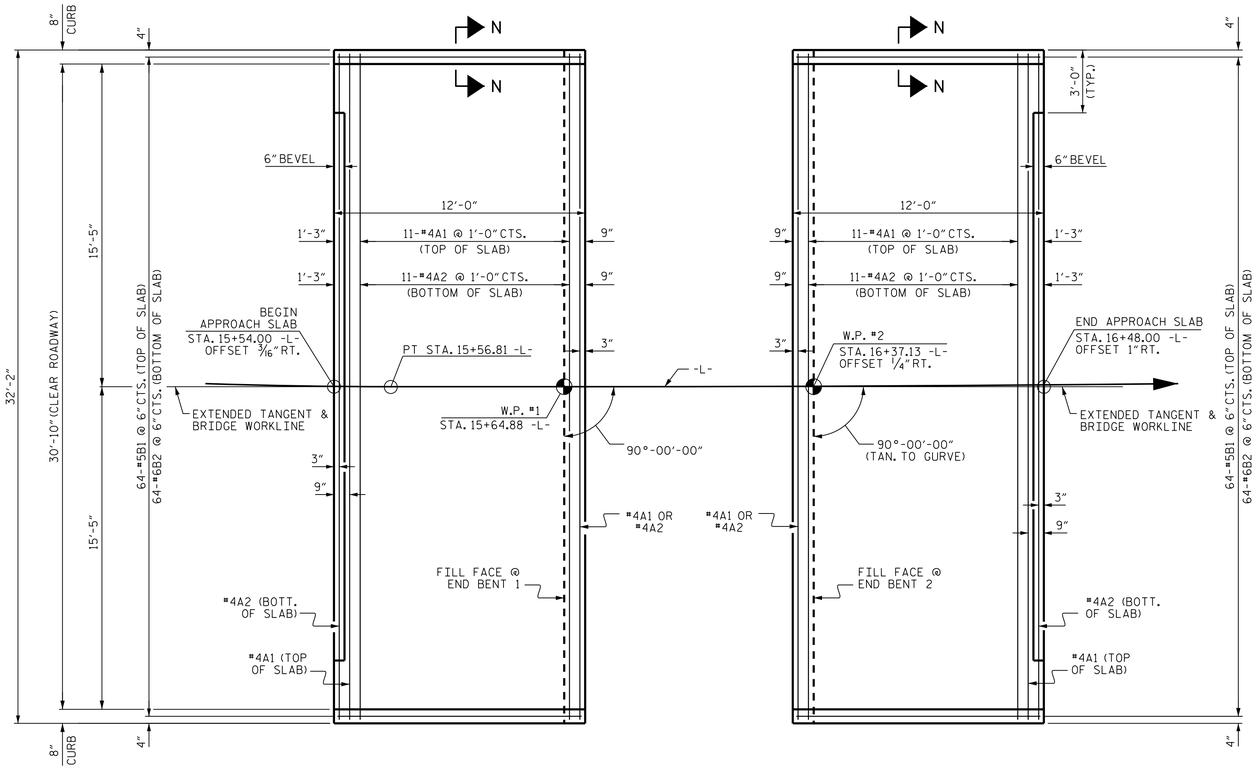

AT END BENT 1

AT END BENT 2

PLAN

DIMENSIONS SHOWN ARE TYPICAL FOR BOTH APPROACH SLABS

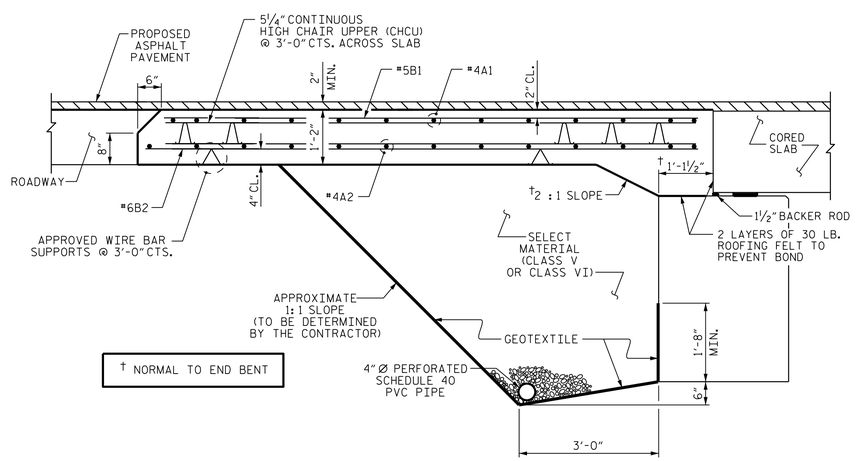

† NORMAL TO END BENT

SECTION THRU SLAB

(TYPE II - MODIFIED APPROACH FILL)

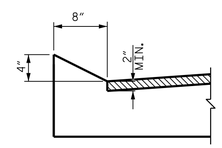

SECTION N-N

NOTES

FOR BRIDGE APPROACH FILL INCLUDING GEOTEXTILE, 4" Ø DRAINAGE PIPE, AND SELECT MATERIAL BACKFILL, SEE ROADWAY PLANS.

GEOTEXTILE SHALL BE TYPE 1 IN ACCORDANCE WITH THE STANDARD SPECIFICATIONS SECTION 1056.

SELECT MATERIAL BACKFILL (CLASS V OR CLASS VI) SHALL BE IN ACCORDANCE WITH STANDARD SPECIFICATIONS SECTION 1016.

SELECT MATERIAL BACKFILL IS TO BE CONTINUOUS ALONG FILL FACE OF BACKWALL FROM OUTSIDE EDGE TO OUTSIDE EDGE OF APPROACH SLAB.

FOR THE 4" Ø DRAINAGE PIPE OUTLET(S), SEE ROADWAY STANDARD DRAWINGS.

AREA BETWEEN THE WINGWALL AND APPROACH SLAB SHALL BE GRADED TO DRAIN THE WATER AWAY FROM THE FILL FACE OF THE BRIDGE AND SHALL BE PAVED. SEE ROADWAY PLANS.

APPROACH SLAB GROOVING IS NOT REQUIRED.

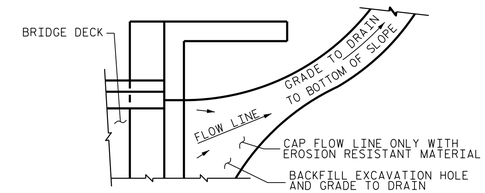

NOTE: IF THE APPROACH SLAB IS NOT CONSTRUCTED IMMEDIATELY AFTER THE BACKFILLING OF THE END BENT EXCAVATION, GRADE TO DRAIN TO THE BOTTOM OF THE SLOPE AND PROVIDE EROSION RESISTANT MATERIAL, SUCH AS FIBERGLASS ROVING OR AS DIRECTED BY THE ENGINEER TO PREVENT SOIL EROSION AND TO PROTECT THE AREA ADJACENT TO THE STRUCTURE. THE CONTRACTOR WILL BE REQUIRED TO REMOVE THESE MATERIALS PRIOR TO CONSTRUCTION OF THE APPROACH SLAB.

TEMPORARY DRAINAGE DETAIL

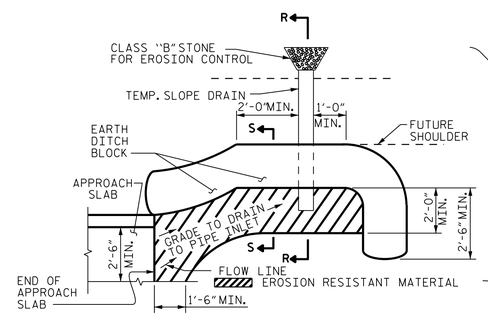

NOTE: IMMEDIATELY AFTER THE CONSTRUCTION OF THE APPROACH SLAB, THE CONTRACTOR SHALL PROVIDE TEMPORARY BERM AND SLOPE DRAIN. CONTRACTOR SHALL GRADE TO PIPE INLET AND PROVIDE EROSION RESISTANT MATERIAL AS SHOWN. THE EROSION RESISTANT MATERIAL SHALL BE EITHER 1) ASPHALT PLANT MIX, TYPE 1 OR TYPE 2, MIN. 2" DEPTH, 2) EROSION CONTROL MAT, OR 3) CONCRETE, AS DIRECTED BY THE ENGINEER. THE SLOPE DRAIN SHALL CONSIST OF A NON-PERFORATED TEMPORARY DRAINAGE PIPE, 12 INCHES IN DIAMETER.

PLAN VIEW

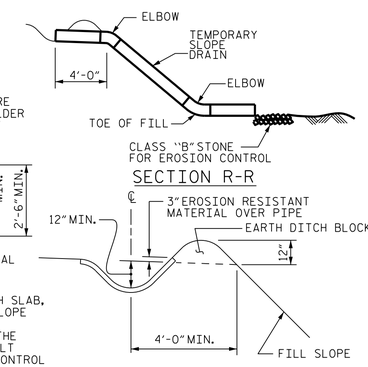

SECTION S-S

TEMPORARY BERM AND SLOPE DRAIN DETAILS

(TO BE USED WHEN SHOULDER BERM GUTTER IS REQUIRED)

BILL OF MATERIAL

FOR ONE APPROACH SLAB (2 REQUIRED)

BAR	NO.	SIZE	TYPE	LENGTH	WEIGHT
* A1	13	#4	STR	31'-10"	276
A2	13	#4	STR	31'-10"	276
* B1	64	#5	STR	11'-2"	745
B2	64	#6	STR	11'-8"	1121
REINFORCING STEEL				LBS.	1397
* EPOXY COATED REINFORCING STEEL				LBS.	1021
CLASS AA CONCRETE				C.Y.	19.5

SPLICE LENGTHS

BAR SIZE	EPOXY COATED	UNCOATED
#4	1'-11"	1'-7"
#5	2'-5"	2'-0"
#6	3'-7"	2'-5"

PROJECT NO. BP2.R019.1

CRAVEN COUNTY

STATION: 16+01.00 -L-

DOCUMENT NOT CONSIDERED FINAL UNLESS ALL SIGNATURES COMPLETED

CDM Smith

CDM SMITH
5400 Glenwood Avenue, Suite 400
Raleigh, NC 27612-3228
NC COA No. F-1255

DRAWN BY : JJR DATE : 10/21
CHECKED BY : THF DATE : 11/21
DESIGN ENGINEER : VDK DATE : 12/21

DWG. No.

NORTH CAROLINA PROFESSIONAL SEAL 047117 ENGINEER VENKATA D. T. KOLLIPARA

DocuSigned by: Venkata D. T. Kollipara
9EAA4A9C5594D5...
2/9/2022

STATE OF NORTH CAROLINA
DEPARTMENT OF TRANSPORTATION
RALEIGH

STANDARD
BRIDGE APPROACH SLAB
FOR PRESTRESSED CONCRETE
CORED SLAB UNIT
(SUB-REGIONAL TIER)
90° SKEW

REVISIONS						SHEET NO.
NO.	BY:	DATE:	NO.	BY:	DATE:	S-15
1			3			TOTAL SHEETS
2			4			15

FILE: $FILES
DATE: $DATES
STIMES

STD. NO. BAS_33_90S

STANDARD NOTES

DESIGN DATA:

SPECIFICATIONS	A.A.S.H.T.O. (CURRENT)
LIVE LOAD	SEE PLANS
IMPACT ALLOWANCE	SEE A.A.S.H.T.O.
STRESS IN EXTREME FIBER OF	
STRUCTURAL STEEL - AASHTO M270 GRADE 36	20,000 LBS. PER SQ. IN.
- AASHTO M270 GRADE 50W	27,000 LBS. PER SQ. IN.
- AASHTO M270 GRADE 50	27,000 LBS. PER SQ. IN.
REINFORCING STEEL IN TENSION	
GRADE 60	24,000 LBS. PER SQ. IN.
CONCRETE IN COMPRESSION	1,200 LBS. PER SQ. IN.
CONCRETE IN SHEAR	SEE A.A.S.H.T.O.
STRUCTURAL TIMBER - TREATED OR	
UNTREATED - EXTREME FIBER STRESS	1,800 LBS. PER SQ. IN.
COMPRESSION PERPENDICULAR TO GRAIN OF TIMBER	375 LBS. PER SQ. IN.
EQUIVALENT FLUID PRESSURE OF EARTH	30 LBS. PER CU. FT. (MINIMUM)

MATERIAL AND WORKMANSHIP:

EXCEPT AS MAY OTHERWISE BE SPECIFIED ON PLANS OR IN THE SPECIAL PROVISIONS, ALL MATERIAL AND WORKMANSHIP SHALL BE IN ACCORDANCE WITH THE 2018 "STANDARD SPECIFICATIONS FOR ROADS AND STRUCTURES" OF THE N. C. DEPARTMENT OF TRANSPORTATION.

STEEL SHEET PILING FOR PERMANENT OR TEMPORARY APPLICATIONS SHALL BE HOT ROLLED.

CONCRETE:

UNLESS OTHERWISE REQUIRED ON PLANS, CLASS A CONCRETE SHALL BE USED FOR ALL PORTIONS OF ALL STRUCTURES WITH THE EXCEPTION THAT: CLASS AA CONCRETE SHALL BE USED IN BRIDGE SUPERSTRUCTURES, ABUTMENT BACKWALLS, AND APPROACH SLABS; AND CLASS B CONCRETE SHALL BE USED FOR SLOPE PROTECTION AND RIP RAP.

CONCRETE CHAMFERS:

UNLESS OTHERWISE NOTED ON THE PLANS, ALL EXPOSED CORNERS ON STRUCTURES SHALL BE CHAMFERED 3/4" WITH THE FOLLOWING EXCEPTIONS: TOP CORNERS OF CURBS MAY BE ROUNDED TO 1-1/2" RADIUS WHICH IS BUILT INTO CURB FORMS; CORNERS OF TRANSVERSE FLOOR EXPANSION JOINTS SHALL BE ROUNDED WITH A 1/4" FINISHING TOOL UNLESS OTHERWISE REQUIRED ON PLANS; AND CORNERS OF EXPANSION JOINTS IN THE ROADWAY FACES AND TOPS OF CURBS AND SIDEWALKS SHALL BE ROUNDED TO A 1/4" RADIUS WITH A FINISHING STONE OR TOOL UNLESS OTHERWISE REQUIRED ON PLANS.

DOWELS:

DOWELS WHEN INDICATED ON PLANS AS FOR CULVERT EXTENSIONS, SHALL BE EMBEDDED AT LEAST 12" INTO THE OLD CONCRETE AND GROUTED INTO PLACE WITH 1:2 CEMENT MORTAR.

ALLOWANCE FOR DEAD LOAD DEFLECTION, SETTLEMENT, ETC. IN CASTING SUPERSTRUCTURES:

BRIDGES SHALL BE BUILT ON THE GRADE OR VERTICAL CURVE SHOWN ON PLANS. SLABS, CURBS AND PARAPETS SHALL CONFORM TO THE GRADE OR CURVE.

ALL DIMENSIONS WHICH ARE GIVEN IN SECTION AND ARE AFFECTED BY DEAD LOAD DEFLECTIONS ARE DIMENSIONS AT CENTER LINE OF BEARING UNLESS OTHERWISE NOTED ON PLANS. IN SETTING FORMS FOR STEEL BEAM BRIDGES AND PRESTRESSED CONCRETE GIRDER BRIDGES, ADJUSTMENTS SHALL BE MADE DUE TO THE DEAD LOAD DEFLECTIONS FOR THE ELEVATIONS SHOWN. WHERE BLOCKS ARE SHOWN OVER BEAMS FOR BUILDING UP TO THE SLAB, THE VERTICAL DIMENSIONS OF THE BLOCKS SHALL BE ADJUSTED BETWEEN BEARINGS TO COMPENSATE FOR DEAD LOAD DEFLECTIONS, VERTICAL CURVE ORDINATE, AND ACTUAL BEAM CAMBER. WHERE BOTTOM OF SLAB IS IN LINE WITH BOTTOM OF TOP FLANGES, DEPTH OF SLAB BETWEEN BEARINGS SHALL BE ADJUSTED TO COMPENSATE FOR DEAD LOAD DEFLECTION, VERTICAL CURVE ORDINATE, AND ACTUAL BEAM CAMBER.

IN SETTING FALSEWORK AND FORMS FOR REINFORCED CONCRETE SPANS, AN ALLOWANCE SHALL BE MADE FOR DEAD LOAD DEFLECTIONS, SETTLEMENT OF FALSEWORK, AND PERMANENT CAMBER WHICH SHALL BE PROVIDED FOR IN ADDITION TO THE ELEVATIONS SHOWN. AFTER REMOVAL OF THE FALSEWORK, THE FINISHED STRUCTURES SHALL CONFORM TO THE PROFILE AND ELEVATIONS SHOWN ON THE PLANS AND CONSTRUCTION ELEVATIONS FURNISHED BY THE ENGINEER.

DETAILED DRAWINGS FOR FALSEWORK OR FORMS FOR BRIDGE SUPERSTRUCTURE AND ANY STRUCTURE OR PARTS OF A STRUCTURE AS NOTED ON THE PLANS SHALL BE SUBMITTED TO THE ENGINEER FOR APPROVAL BEFORE CONSTRUCTION OF THE FALSEWORK OR FORMS IS STARTED.

REINFORCING STEEL:

ALL REINFORCING STEEL SHALL BE DEFORMED. DIMENSIONS RELATIVE TO PLACEMENT OF REINFORCING ARE TO CENTERS OF BARS UNLESS OTHERWISE INDICATED IN THE PLANS. DIMENSIONS ON BAR DETAILS ARE TO CENTERS OF BARS OR ARE OUT TO OUT AS INDICATED ON PLANS.

WIRE BAR SUPPORTS SHALL BE PROVIDED FOR REINFORCING STEEL WHERE INDICATED ON THE PLANS. WHEN BAR SUPPORT PIECES ARE PLACED IN CONTINUOUS LINES, THEY SHALL BE SO PLACED THAT THE ENDS OF THE SUPPORTING WIRES SHALL BE LAPPED TO LOCK LEGS ON ADJOINING PIECES.

STRUCTURAL STEEL:

AT THE CONTRACTOR'S OPTION, HE MAY SUBSTITUTE 7/8" Ø SHEAR STUDS FOR THE 3/4" Ø STUDS SPECIFIED ON THE PLANS. THIS SUBSTITUTION SHALL BE MADE AT THE RATE OF 3 - 7/8" Ø STUDS FOR 4 - 3/4" Ø STUDS, AND STUD SPACING CHANGES SHALL BE MADE AS NECESSARY TO PROVIDE THE SAME EQUIVALENT NUMBER OF 7/8" Ø STUDS ALONG THE BEAM AS SHOWN FOR 3/4" Ø STUDS BASED ON THE RATIO OF 3 - 7/8" Ø STUDS FOR 4 - 3/4" Ø STUDS. STUDS OF THE LENGTH SPECIFIED ON THE PLANS MUST BE PROVIDED. THE MAXIMUM SPACING SHALL BE 2'-0".

EXCEPT AT THE INTERIOR SUPPORTS OF CONTINUOUS BEAMS WHERE THE COVER PLATE IS IN CONTACT WITH BEARING PLATE, THE CONTRACTOR MAY, AT HIS OPTION, SUBSTITUTE FOR THE COVER PLATES DESIGNATED ON THE PLANS COVER PLATES OF THE EQUIVALENT AREA PROVIDED THESE PLATES ARE AT LEAST 5/16" IN THICKNESS AND DO NOT EXCEED A WIDTH EQUAL TO THE FLANGE WIDTH LESS 2" OR A THICKNESS EQUAL TO 2 TIMES THE FLANGE THICKNESS. THE SIZE OF FILLET WELDS SHALL CONFORM TO THE REQUIREMENTS OF THE CURRENT ANSI/AASHTO/AWS "BRIDGE WELDING CODE". ELECTROSLAG WELDING WILL NOT BE PERMITTED.

WITH THE SOLE EXCEPTION OF EDGES AT SURFACES WHICH BEAR ON OTHER SURFACES, ALL SHARP EDGES AND ENDS OF SHAPES AND PLATES SHALL BE SLIGHTLY ROUNDED BY SUITABLE MEANS TO A RADIUS OF APPROXIMATELY 1/16 INCH OR EQUIVALENT FLAT SURFACE AT A SUITABLE ANGLE PRIOR TO PAINTING, GALVANIZING, OR METALLIZING.

HANDRAILS AND POSTS:

METAL STANDARDS AND FACES OF THE CONCRETE END POSTS FOR THE METAL RAIL SHALL BE SET NORMAL TO THE GRADE OF THE CURB, UNLESS OTHERWISE SHOWN ON PLANS. THE METAL RAIL AND TOPS OF CONCRETE POSTS USED WITH THE ALUMINUM RAIL SHALL BE BUILT PARALLEL TO THE GRADE OF THE CURB.

METAL HANDRAILS SHALL BE IN ACCORDANCE WITH THE PLANS. RAILS SHALL BE AS MANUFACTURED FOR BRIDGE RAILING. CASTINGS SHALL BE OF A UNIFORM APPEARANCE. FINS AND OTHER DEFORMATIONS RESULTING FROM CASTING OR OTHERWISE SHALL BE REMOVED IN A MANNER SO THAT A UNIFORM COLORING OF THE COMPLETED CASTING SHALL BE OBTAINED. CASTINGS WITH DISCOLORATIONS OR OF NON-UNIFORM COLORING WILL NOT BE ACCEPTED. CERTIFIED MILL REPORTS ARE REQUIRED FOR METAL RAILS AND POSTS.

SPECIAL NOTES:

GENERALLY, IN CASE OF DISCREPANCY, THIS STANDARD SHEET OF NOTES SHALL GOVERN OVER THE SPECIFICATIONS, BUT THE REMAINDER OF THE PLANS SHALL GOVERN OVER NOTES HEREON, AND SPECIAL PROVISIONS SHALL GOVERN OVER ALL. SEE SPECIFICATIONS ARTICLE 105-4.

ENGLISH

JANUARY, 1990