CONSTRUCTION DOCUMENTS FOR

NC DEPT. OF TRANSPORTATION

PROJECT 42229.1.1(K-5101)

US 70 REST AREA RENOVATIONS

NEW BERN, CRAVEN COUNTY, NC

JKF PROJECT NO. 2013-18

JANUARY 10, 2014

JKF
ARCHITECTURE
P.O. BOX 20662 GREENVILLE, NC 27858 (252)355-1068 PHONE

JOHN K. FARKAS
REGISTERED ARCHITECT
5922
8-19-2014
GREENVILLE

JKF ARCHITECTURE, P.C.
REGISTERED ARCHITECTURAL CORPORATION
CERT. NO.
51351
NORTH CAROLINA
GREENVILLE, NC

RPA ENGINEERING, PA
STRUCTURAL ENGINEER
102 REGENCY BLVD., SUITE A1
GREENVILLE, NC 27834
252-321-6027

BURKE DESIGN GROUP, PA
MECHANICAL & ELECTRICAL ENGINEERS
3305-109 DURHAM DR.
RALEIGH, NC 27603
919-771-1916

ROOM FINISH SCHEDULE (SEE FLOOR PLANS)

ROOM NAME
A | B | C
- WALL FINISH
- BASE MATERIAL/FINISH
- FLOOR MATERIAL/FINISH

FLOOR MATERIALS/FINISH

CT CERAMIC TILE
EC EXPOSED CONCRETE, SEALED

BASE MATERIALS

CT CERAMIC TILE
R RUBBER
SW STAINED WOOD

WALL MATERIALS/FINISH

P PAINTED GYPSUM BOARD
CT CERAMIC TILE, GLAZED WALL

REFLECTED CEILING PLAN LEGEND

- FLUORESCENT LIGHT FIXTURE DEEP CELL PARABOLIC (SEE ELECTRICAL DRAWINGS FOR SIZE AND TYPE)
- FLUORESCENT LIGHT FIXTURE (SEE ELECTRICAL DRAWINGS FOR SIZE AND TYPE)
- SUPPLY AIR DIFFUSER
- RETURN AIR DIFFUSER
- 1/2" X 1/2" PARABOLIC EGGCRATE
- DOWNLIGHT FIXTURE
- WALL WASHER FIXTURE
- WALL SCONCE OR MOUNTED FIXTURE
- ROOM NO. / FIN. CLG. HEIGHT AFF. / CEILING MATERIAL (ROOM NAME; CLG | HGT)
- HEAT DETECTOR
- SMOKE DETECTOR
- SPRINKLER HEAD CEILING
- SPRINKLER HEAD WALL
- X'-X" / XXX — DATUM ABOVE FIN. FLOOR / CEILING MATERIAL (SEE LEGEND)

CEILING MATERIALS LEGEND

P PAINTED GYPSUM BOARD

GENERAL PROJECT LEGEND

- A1 / A3.1 — REFERENCE NO. / DRAWING NO.
- DENOTES CHANGE IN FINISHED FLOOR MATERIAL
- A1 / A4 A4.1 A2 / A3 — ELEVATION REFERENCE
- 101 — DOOR NO. / DOOR ASSEMBLY DESIGNATION / HARDWARE SET NO. / DOOR GROUP NO.
- 4X — PARTITION TYPE (SEE DRAWING A7.1)
- 1 — GENERAL NOTE REFERENCE
- NEW CONSTRUCTION

ARCHITECTURAL ABBREVIATIONS

APC	ACOUSTICAL PANEL CEILING
ADJ.	ADJACENT
AFF	ABOVE FINISHED FLOOR
AL.	ALUMINUM
ALT.	ALTERNATE
AN	ANODIZED
ATTN.	ATTENUATION
BD.	BOARD
BIT.	BITUMINOUS
BLKG.	BLOCKING
BLKT.	BLANKET
BM.	BEAM
BOP	BOTTOM OF PLATE
BRG.	BEARING
CAB.	CABINET
CAP.	CAPACITY
CB	CATCH BASIN
℄	CENTERLINE
CLG.HT.	CEILING HEIGHT
CJ	CONTROL JOINT
CLR.	CLEAR
CLG.	CEILING
CMU	CONCRETE MASONRY UNIT
COL.	COLUMN
CONC.	CONCRETE
CONSTR.	CONSTRUCTION
CONT.	CONTINUOUS
CONTR.	CONTRACTOR
CT	CERAMIC TILE
DWG.	DRAWING
EA.	EACH
EC	ELECTRICAL CONTRACTOR
EF	EXHAUST FAN
ELEC.	ELECTRICAL
ENCL.	ENCLOSURE
ECS	EDGE OF SLAB
EQ.C.	EQUIPMENT CONTRACTOR
EWC	ELECTRIC WATER COOLER
EXIST.	EXISTING
EXPO.	EXPOSED
EXP. JT.	EXPANSION JOINT
EXT.	EXTERIOR
F.D.	FLOOR DRAIN
FDN.	FOUNDATION
F.E.	FIRE EXTINGUISHER
FFE	FINISHED FLOOR ELEVATION
fl.	FLOOR
F.O.	FACE OF
FRP	FIBERGLASS REINFORCED POLYESTER
	FIRE RETARDANT TREATED
FTG.	FOOTING
FUR.	FURRING
GA.	GAUGE
GAL.	GALLON
GALV.	GALVANIZED
GB	GRAB BAR
GC	GENERAL CONTRACTOR
GL.	GLASS
G.N.	GENERAL NOTE
GYP.BD.	GYPSUM BOARD
HDW	HARDWARE
HM	HOLLOW METAL
HP	HIGH POINT
HT.	HEIGHT
HVAC	HEATING,VENTILATION,AIR CONDITIONING
INT.	INTERIOR
INSUL.	INSULATION
INV.	INVERT
JT.	JOINT
LFRCG	LAMINATED FIRE-RATED SAFETY RATED CERAMIC GLASS
LAV.	LAVATORY
LP	LOW POINT
MANUF.	MANUFACTURER
MC	MECHANICAL CONTRACTOR
MH.	MANHOLE
MECH.	MECHANICAL
MIN.	MINIMUM
MO.	MASONRY OPENING
MTD.	MOUNTED
MTL.	METAL
NIC	NOT IN CONTRACT
N.T.S.	NOT TO SCALE
O/C	ON CENTER
OH.	OVERHANG
OHD.	OVERHEAD
OPNG.	OPENING
PART.	PARTITION
PC	PLUMBING CONTRACTOR
PL.	PLATE
P.	PAINTED
REF.	REFRIGERATOR
REINF.	REINFORCE/REINFORCEING
REQD.	REQUIRED
RM.	ROOM
RO.	ROUGH OPENING
RSW	RAIL & STILE WOOD
SCHED.	SCHEDULE
SF	SQUARE FEET
SIM.	SIMILAR
SPECS.	SPECIFICATIONS
S.S.	STAINLESS STEEL
STD.	STANDARD
STL.	STEEL
STRUCT.	STRUCTURE/STRUCTURAL
SUSP.	SUSPENDED
TC	TOP CURB
TF	TRANSPARENT FINISH
TG	TOP GRATE
TEMP.	TEMPERED
THK.	THICK
TJ	TOP OF JOIST
TOM	TOP OF MASONRY
TOP	TOP OF PLATE
TOS.	TOP OF SLAB
TOW	TOP OF WALL
TYP.	TYPICAL
TZS	TOP OF STEEL
TS	TUBE STEEL
U.N.O.	UNLESS NOTED OTHERWISE
VAR.	VARIES
VERT.	VERTICAL
VIF	VERIFY IN FIELD
WD.	WOOD
WDW.	WINDOW
WSC	WOOD SOLID CORE
WWF	WELDED WIRE FABRIC
W/	WITH

2012 APPENDIX B BUILDING CODE SUMMARY

Name of Project: NCDOT US 70 Rest Area Renovations
Address: New Bern, Craven County, NC
Proposed Use: Public Restroom and Information Facility
Owner/Authorized Agent: Tad Davis Phone # (919) 707-2930 E-Mail: tadavis@ncdot.gov
Owned By: ☒ State
Code Enforcement Jurisdiction: ☒ State

LEAD DESIGN PROFESSIONAL: JKF ARCHITECTURE

DESIGNER	FIRM NAME	LICENSE #	TELEPHONE #	E-MAIL
Architectural	JKF Architecture, P.C John Farkas, AIA	NC 5922	(252) 355-1068	jkf@jkf-arch.com
Civil	NCDOT			
Electrical	Ben Burke, PE Ben Burke, PE	PE#22038	(919)771-1916	benburke@nc.rr.com
Fire Alarm	Ben Burke, PE Ben Burke, PE	PE#22038	(919)771-1916	benburke@nc.rr.com
Plumbing	Ben Burke, PE Ben Burke, PE	PE#22038	(919)771-1916	benburke@nc.rr.com
Mechanical	Ben Burke, PE Ben Burke, PE	PE#22038	(919)771-1916	benburke@nc.rr.com
Structural	RPA Mark Roy, PA	NC 17348	252-321-6027	mark.roy@rpaengineering.com

2012 EDITION OF NC CODE FOR: ☒ New Construction

BASIC BUILDING DATA
Construction Type: ☒ V-B
Sprinklers: ☒ No
Standpipes: ☒ No
Fire District: ☒ No **Flood Hazard Area:** ☒ No
Building Height: (feet) 25'-9"
Gross Building Area:

FLOOR	EXISTING (SQ.FT)	NEW (SQ.FT)	SUB-TOTAL
1st Floor	N/A	2664 sq. ft.	2664 sq. ft.
TOTAL		2664 sq. ft.	2664 sq. ft.

ALLOWABLE AREA

Occupancy:
Business ☒
Incidental Uses (Table 508.2.5): **NONE**
Special Uses: **NONE**
Special Provisions: NONE
Mixed Occupancy: ☒ No

STORY NO.	DESCRIPTION AND USE	(A) BLDG AREA PER STORY (ACTUAL)	(B) TABLE 503[1] AREA	(C) AREA FOR FRONTAGE INCREASE[2]	(D) AREA FOR SPRINKLER INCREASE[3]	(E) ALLOWABLE AREA OR UNLIMITED[4]	(F) MAXIMUM BUILDING AREA[5]
1	Restrooms	2403	9,000	0	0	9,000	9,000

ALLOWABLE HEIGHT

	ALLOWABLE (TABLE 503)	INCREASE FOR SPRINKLERS	SHOWN ON PLANS	CODE REFERENCE
Type of Construction	Type VB		Type VB	
Building Height in Feet	40'	N/A	25'-9"	
Building Height in Stories	2	N/A	1	

FIRE PROTECTION REQUIREMENTS

BUILDING ELEMENT	FIRE SEPARATION DISTANCE (FEET)	RATING REQ'D	RATING PROVIDED (w/ * REDUCTION)	DETAIL # AND SHEET #	DESIGN # FOR RATED ASSEMBLY	DESIGN # FOR RATED PENETRATION	DESIGN # FOR RATED JOINTS
Structural Frame, including columns, girders, trusses		0					
Bearing Walls							
Exterior							
North	>30'	0					
East	>30'	0					
West	>30'	0					
South	>30'	0					
Interior		0					
Nonbearing Walls and Partitions							
Exterior walls							
North	>30'	0					
East	>30'	0					
West	>30'	0					
South	>30'	0					
Interior walls and partitions		0					
Floor Construction Including supporting beams and joists		0					
Roof Construction Including supporting beams and joists		0					
Shaft Enclosures - Exit		N/A					
Shaft Enclosures - Other		N/A					
Corridor Separation		0**					
Occupancy Separation		N/A					
Party/Fire Wall Separation		N/A					
Smoke Barrier Separation		N/A					
Tenant Separation		N/A					
Incidental Use Separation		N/A					

* Indicate section number permitting reduction
** Single tenant building, table 1018.1 Footnote F.

LIFE SAFETY SYSTEM REQUIREMENTS

Emergency Lighting: ☒ Yes
Exit Signs: ☒ Yes
Fire Alarm: ☒ Yes
Smoke Detection Systems: ☒ Yes
Panic Hardware: ☒ Yes

LIFE SAFETY PLAN REQUIREMENTS

Life Safety Plan Sheet #: BC1.1

- ☐ Fire and/or smoke rated wall locations (Chapter 7) N/A
- ☒ Assumed and real property line locations
- ☒ Exterior wall opening area with respect to distance to assumed property lines (705.8)
- ☒ Existing structures within 30' of the proposed building
- ☒ Occupancy types for each area as it relates to occupant load calculation (Table 1004.1.1)
- ☒ Occupant loads for each area
- ☒ Exit access travel distances (1016)
- ☒ Common path of travel distances (1014.3 & 1028.8)
- ☒ Dead end lengths (1018.4)
- ☒ Clear exit widths for each exit door
- ☒ Maximum calculated occupant load capacity each exit door can accommodate based on egress width (1005.1)
- ☒ Actual occupant load for each exit door
- ☐ A separate schematic plan indicating where fire rated floor/ceiling and/or roof structure is provided for purposes of occupancy separation N/A
- ☒ Location of doors with panic hardware (1008.1.10)
- ☐ Location of doors with delayed egress locks and the amount of delay (1008.1.9.7) N/A
- ☐ Location of doors with electromagnetic egress locks (1008.1.9.8) N/A
- ☐ Location of doors equipped with hold-open devices N/A
- ☐ Location of emergency escape windows (1029) N/A
- ☒ The square footage of each fire area (902)
- ☐ The square footage of each smoke compartment (407.4) N/A
- ☐ Note any code exceptions or table notes that may have been utilized regarding the items above N/A

ACCESSIBLE DWELLING UNITS - N/A (SECTION 1107)

ACCESSIBLE PARKING – SEE SITE PLAN (SECTION 1106)

STRUCTURAL DESIGN

DESIGN LOADS:

Importance Factors: Wind (I_W) 1.0; Snow (I_S) 1.0; Seismic (I_E) 1.0

Live Loads: Roof 20 psf; Mezzanine N/A; Floor 100 psf

Ground Snow Load: 10 psf

Wind Load: Basic Wind Speed 120 mph (ASCE-7); Exposure Category 13; Wind Base Shears (for MWFRS) V_x = 31k V_y = 38k; Wind Pressure 40 PSF

SEISMIC DESIGN CATEGORY: ☒ C

Provide the following Seismic Design Parameters:
Occupancy Category (Table 1604.5) ☒ II
Spectral Response Acceleration S_S17.5 %g $S_1$8.5 %g
Site Classification (Table 1613.5.2) ☒ D
Data Source: ☐ Field Test ☐ Presumptive ☐ Historical Data
Basic structural system (check one)
☒ Bearing Wall
Seismic base shear: V_X = Sk V_Y = Sk
Analysis Procedure: ☒ Equivalent Lateral Force
Architectural, Mechanical, Components anchored? ☒ No

LATERAL DESIGN CONTROL: Wind ☒

SOIL BEARING CAPACITIES:
Field Test (provide copy of test report) N/A
Presumptive Bearing capacity 1500 psf
Pile size, type, and capacity N/A

SPECIAL INSPECTIONS REQUIRED: ☒ No

PLUMBING FIXTURE REQUIREMENTS (TABLE 2902.1)

USE		WATERCLOSETS MALE	WATERCLOSETS FEMALE	URINALS	LAVATORIES MALE	LAVATORIES FEMALE	SHOWERS/ TUBS	DRINKING FOUNTAINS REGULAR	DRINKING FOUNTAINS ACCESSIBLE
SPACE	EXISTING								
	NEW	4	8	4	4	4	0	1	1
	REQUIRED						0		

SPECIAL APPROVALS

Special approval: NC State Construction – Code Review Only

ENERGY SUMMARY

ENERGY REQUIREMENTS:
The following data shall be considered minimum and any special attribute required to meet the energy code shall also be provided. Each Designer shall furnish the required portions of the project information for the plan data sheet. If performance method, state the annual energy cost for the standard reference design vs annual energy cost for the proposed design.

Climate Zone: ☒ 3

Method of Compliance:
☒ Prescriptive (Energy Code)

THERMAL ENVELOPE

Roof/ceiling Assembly (each assembly)
Description of assembly: Standing seam metal roof on wood studs with R-38 Batt Insulation
U-Value of total assembly: 0.029 (0.036 maximum)
R-Value of insulation: R-38 (R-38 minimum)
Skylights in each assembly: None

Exterior Walls (each assembly)
Description of assembly: Brick veneer cavity wall, 2 3/8" air cavity, 2" cont. insul. (R-10), ½" plywood sheathing, 2x4 wood studs with R-13 batt insulation.
U-Value of total assembly: 0.043 (0.089 maximum)
R-Value of insulation: R-23 (R-13 minimum)

	windows w/ glazing	doors	Storefront	Translucent Walls
U-Value of assembly	0.30 < 0.33 Max.	0.11 < 0.77 Max.	0.31 < 0.45 Max.	0.22 < 0.45 Max.
Solar heat gain Coefficient	0.19	0	0.32	0.15
Projection factor	0.30	0.30	0.30	0.30
Door R-Values	N/A	R-8 (FRP)	N/A	N/A

Walls below grade N/A

Floors over unconditioned space N/A

Floors slab on grade
Description of assembly: 4" Concrete Slab on Grade
U-Value of total assembly: N/A
R-Value of insulation: R-5
Horizontal/vertical requirement: R-5
slab heated: No

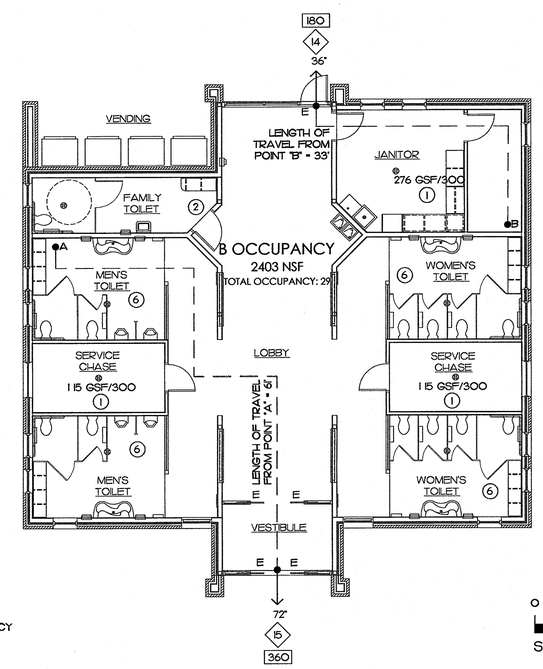

LEGEND:
→
45 EXIT OCCUPANCY LOAD
180 EXIT CAPACITY
30 # OCCUPANTS IN SPACE
E INDICATES EXIT/PANIC DEVICE

N
0 4' 8' 16'
SCALE: 1/8" = 1'-0"

BUILDING CODE PLAN A15
1/8" = 1'-0"

BUILDING CODE ANALYSIS G15
NTS

MATERIALS KEYING LEGEND

DRAWING INDEX:

TITLE SHEET
BC1.1 BUILDING CODE ANALYSIS, LEGENDS, SYMBOLS & ABBREVIATIONS

SITE
L-1 TITLE SHEET/SUMMARY OF QUANTITIES
L-2 EXISTING SITE PLAN
L-3 DEMOLITION PLAN
L-4 PROPOSED SITE PLAN
L-5 DRAINAGE PLAN
L-6 SIDEWALK LAYOUT PLAN
L-7 DETAIL SHEET
L-8 PICNIC SHELTER DETAIL

ARCHITECTURAL
A1.1 FLOOR PLAN
A1.2 ROOF PLAN
A2.1 EXTERIOR ELEVATIONS
A2.2 EXTERIOR ELEVATIONS
A2.3 BUILDING SECTIONS & INTERIOR ELEVATIONS
A3.1 WALL SECTIONS
A3.2 WALL SECTIONS
A5.1 REFLECTED CEILING PLAN
A6.1 EXTERIOR DETAILS
A8.1 DOOR, WINDOW SCHEDULE & DETAILS

STRUCTURAL
S1.1 FOUNDATION PLAN
S1.2 LOWER ROOF FRAMING PLAN
S1.3 UPPER ROOF FRAMING PLAN
S2.1 FOUNDATION DETAILS AND SECTIONS
S3.1 FRAMING DETAILS AND SECTIONS
S4.1 STRUCTURAL NOTES DESIGN CRITERIA SCHEDULES AND DETAILS

PLUMBING
P1.1 PLUMBING SCHEDULE AND DETAILS
P1.2 DRAIN/WASTE/VENT PLAN
P1.3 SUPPLY PLAN
P1.4 RISERS

MECHANICAL
M1.1 HVAC SCHEDULES AND DETAILS
M1.2 HVAC PLAN

ELECTRICAL
E1.1 ELECTRICAL AND DETAILS
E1.2 LIGHTING PLAN
E1.3 POWER PLAN

GENERAL NOTES

KEY PLAN

PROJECT 42229.1.1 (K-5101)

NO	REVISION	DATE

SEAL: JOHN K. FARKAS, REGISTERED ARCHITECT, 5922, GREENVILLE, NC, 3.10.2014

JKF ARCHITECTURE
P.O. BOX 20662 GREENVILLE, NC 27858 PHONE 252-355-1068

NCDOT US 70 REST AREA RENOVATIONS
NEW BERN, CRAVEN COUNTY, NC

DRAWING TITLE: BUILDING CODE ANALYSIS, LEGENDS, SYMBOLS & ABBREVIATIONS

SCALE	AS NOTED
DRAWN	DJH
CHECKED	JKF
DATE	10-2014
PROJECT NO.	2013-18
DRAWING NO	BC1.1

© COPYRIGHT, JKF ARCHITECTURE PC. JOHN K. FARKAS, AIA

STATE NC	T.I.P. # K-5101	SHEET # L-1 of 8
WBS #	F.A. Project #	Description
42229.3.1		P.E.
		R/W
	RA Renovation	CONST.

PROJECT: 42229.3.1 US 70 Craven County Rest Area Renovation

NC GRID NAD 83

STATE OF NORTH CAROLINA
DIVISION OF HIGHWAYS

CRAVEN COUNTY

LOCATION: US 70 REST AREA RENOVATION NEW BERN, CRAVEN COUNTY, NC
TYPE OF WORK: CONSTRUCTION OF NEW REST AREA BUILDING AND SITE WORK

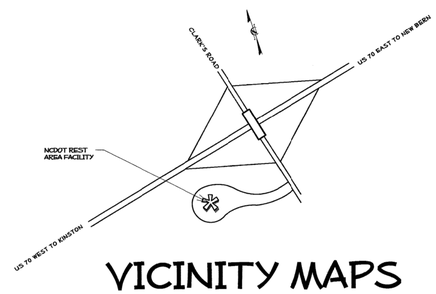

VICINITY MAPS

INDEX OF SHEETS

L-1 TITLE SHEET / SUMMARY OF QUANTITIES
L-2 EXISTING SITE PLAN
L-3 DEMOLITION PLAN
L-4 PROPOSED SITE PLAN
L-5 DRAINAGE PLAN
L-6 SIDEWALK LAYOUT PLAN
L-7 DETAIL SHEET
L-8 PICNIC SHELTER DETAIL

SUMMARY OF QUANTITIES

DESCRIPTION	UNIT	QUANTITY
Site Demolition	LS	1
Tree Preservation / Protection Fence	LF	592
4" Concrete Sidewalks	SY	889
Landscape Site Grading	LS	1
Topsoil (Planter Seating Wall)	CY	9
Picnic Shelter Table / Metal Roof	EA	1
Existing Picnic Shelter / Metal Roof	EA	4
Brick Block Planter Seating Wall	LF	100
Brick Block Pavers	SY	40
Relocation Post Top Lamps	EA	3
6" PVC Utility Sleeves	LF	50

SITE / LANDSCAPE DESIGN

LANDSCAPE DESIGN & DEVELOPMENT

ROADSIDE ENVIRONMENTAL UNIT
1557 MAIL SERVICE CENTER
RALEIGH, NORTH CAROLINA 27699-1557
OFFICE (919) 707-2920 FAX (919) 715-2554

REST AREA SECTION

ROADSIDE ENVIRONMENTAL UNIT
1557 MAIL SERVICE CENTER
RALEIGH, NORTH CAROLINA 27699-1557
OFFICE (919) 707-2920 FAX (919) 715-2554

ARCHITECTURAL / ENGINEERING

ARCHITECT: JKF ARCHITECTURE
PO BOX 20662
GREENVILLE, NC 27858 252-355-0216

MECHANICAL/ELECTRICAL/PLUMBING.: BURKE DESIGN GROUP
305-109 DURHAM DRIVE
RALEIGH, NC 27603 919.618.0717

North Carolina Department of Transportation
Division of Highways
1 South Wilmington Street Raleigh, North Carolina

US-70
CRAVEN COUNTY
REST AREA RENOVATIONS

Plan :

Plans Drawn By: B. MINTER
Scale: n/a
Date: 2 / 9 / 14
Letting Date
2006 Standard Specifications
Sheet Description: TITLE SHEET
Sheet # L-1 - 8

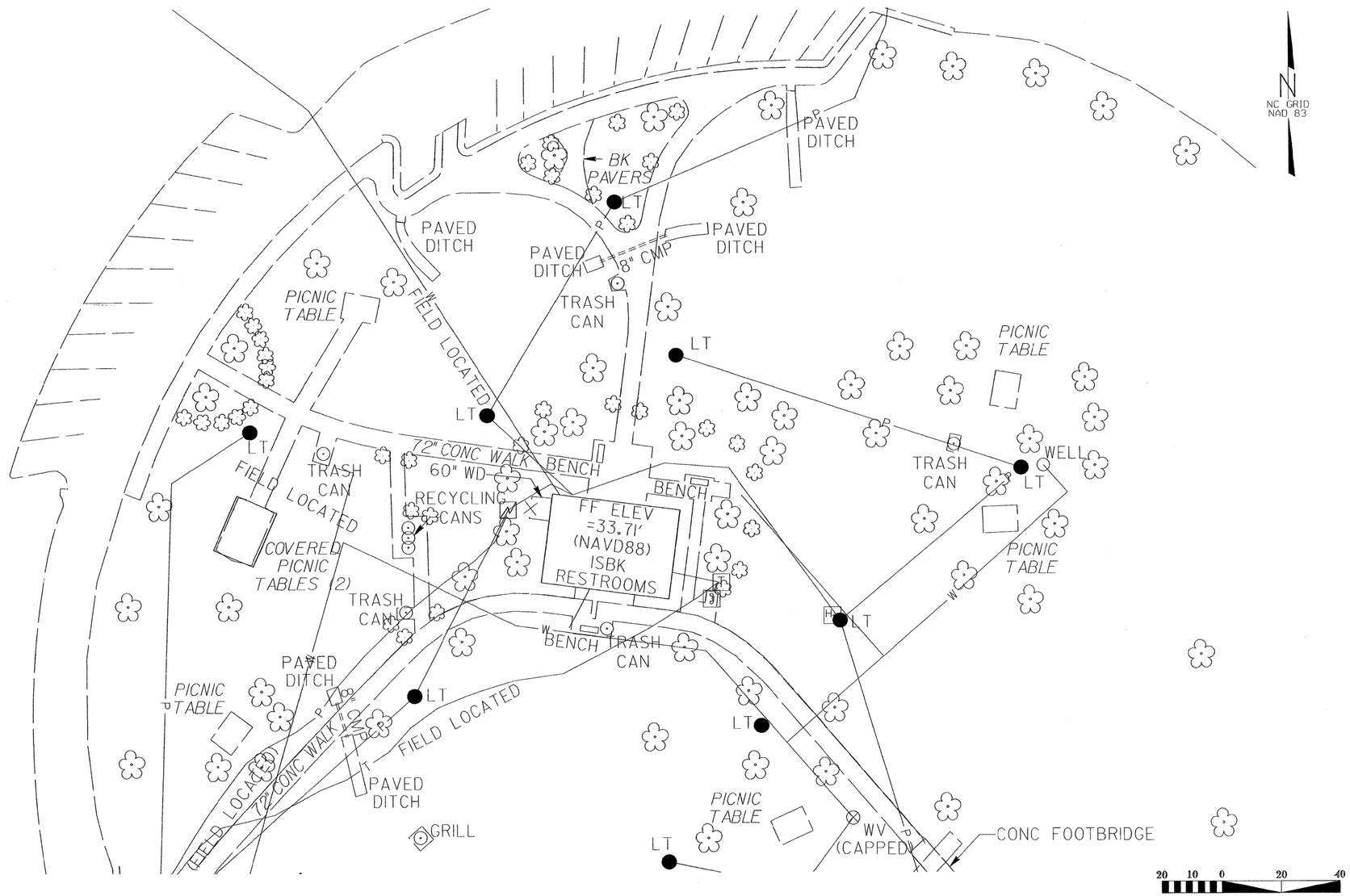

NCDOT - ROADSIDE ENVIRONMENTAL UNIT
LANDSCAPE DESIGN & DEVELOPMENT
1557 MAIL SERVICE CENTER, RALEIGH, NC 27699-1557
PH: 919-707-2920 FAX: 919-715-2554
HTTP://WWW.NCDOT.ORG/DOH/OPERATIONS/DP_CHIEF_ENG/ROADSIDE/

US 70 - Rest Area
Craven County, North Carolina
PROJECT #: 42229.3.1

NORTH CAROLINA REGISTERED LANDSCAPE ARCHITECT 1447 ROBERT N. KOPETSKY 11-14-14

REU ENGINEER: B. Minter Sr.

SHEET DESCRIPTION: Design & Development Plans
Existing Site Plan

PREL DESIGN DATE: JAN - 2014
CHECKED BY & DATE: T. Davis
FINAL DESIGN DATE: FEB - 2014

STATE OF NORTH CAROLINA DEPARTMENT OF TRANSPORTATION

SHEET NO: L2
TOTAL SHEET NO: 8

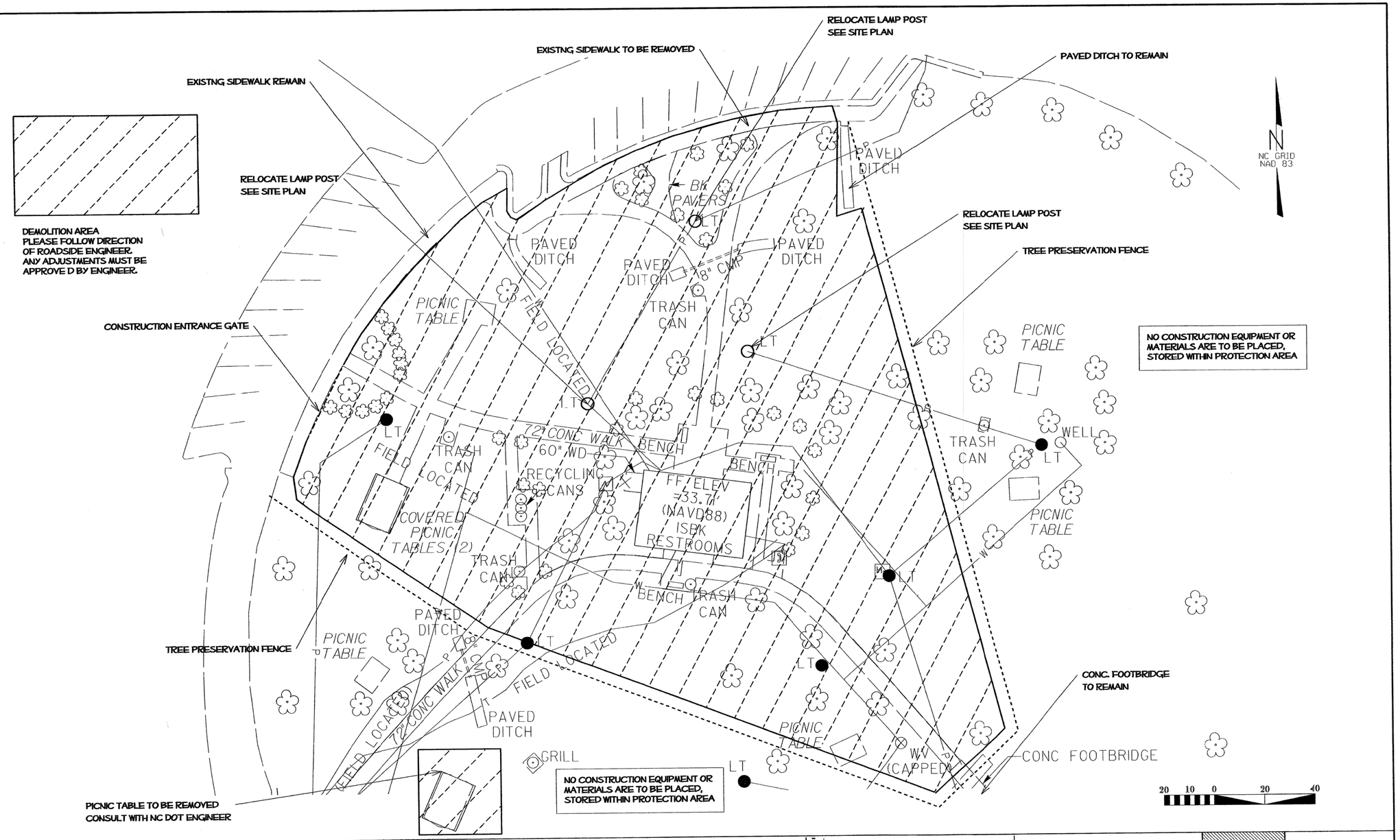

NCDOT - ROADSIDE ENVIRONMENTAL UNIT
LANDSCAPE DESIGN & DEVELOPMENT
1557 MAIL SERVICE CENTER, RALEIGH, NC 27699-1557
PH: 919-707-2920 FAX: 919-715-2554
HTTP://WWW.NCDOT.ORG/DOH/OPERATIONS/DP_CHIEF_ENG/ROADSIDE/

US 70 - Rest Area
Craven County, North Carolina

PROJECT #: 42229.3.1

NORTH CAROLINA PROFESSIONAL ENGINEER 1447 ROBERT N. KOPETSKY

REU ENGINEER: B. Minter Sr.

SHEET DESCRIPTION: Design & Development Plans
Demolition Plan

PREL DESIGN DATE: JAN - 2014
CHECKED BY & DATE: T. Davis
FINAL DESIGN DATE: FEB - 2014

STATE OF NORTH CAROLINA DEPARTMENT OF TRANSPORTATION

SHEET NO: L3
TOTAL SHEET NO: 8

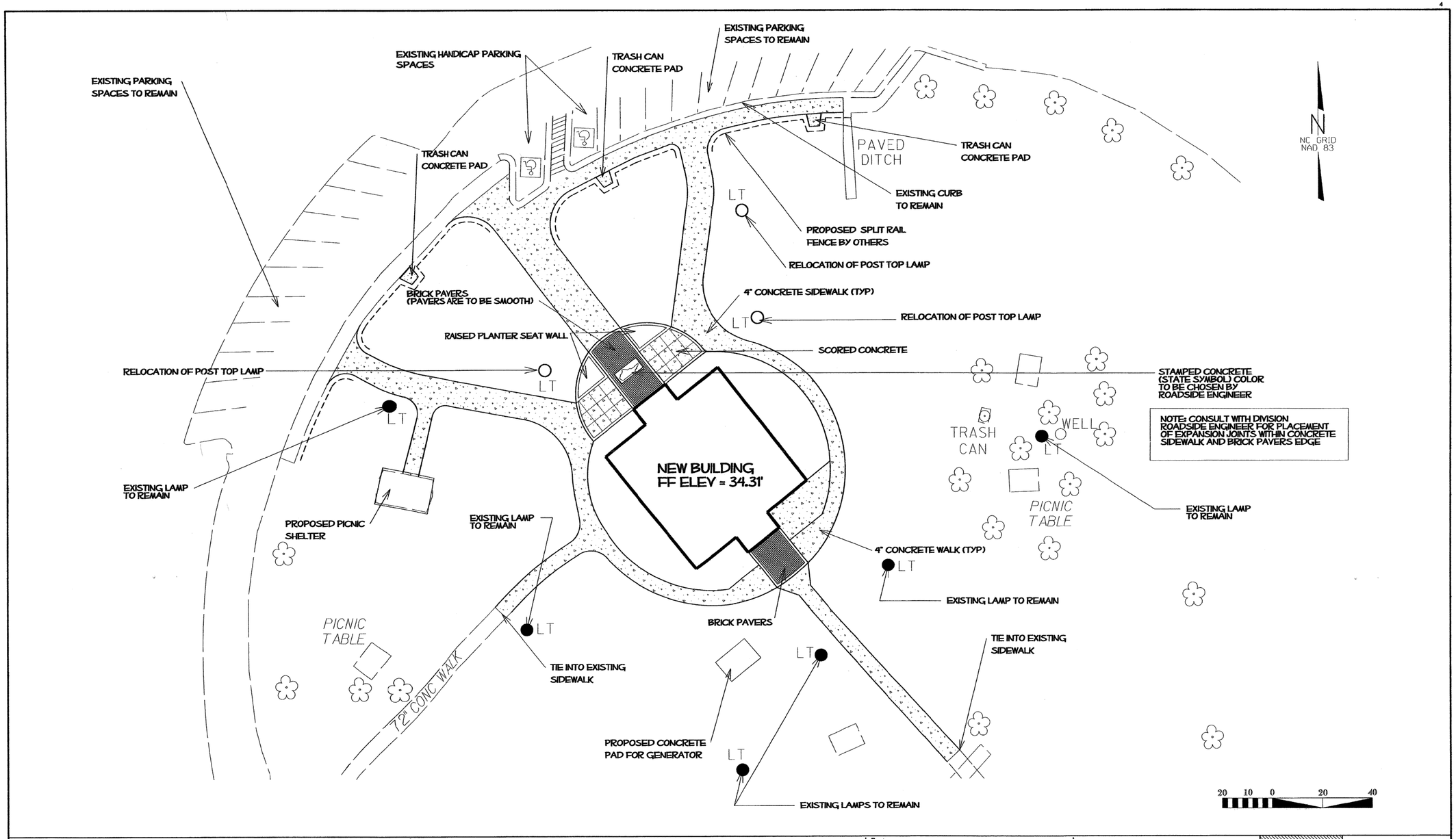

NCDOT - ROADSIDE ENVIRONMENTAL UNIT
LANDSCAPE DESIGN & DEVELOPMENT
1557 MAIL SERVICE CENTER, RALEIGH, NC 27699-1557
PH: 919-707-2920 FAX: 919-715-2554
HTTP://WWW.NCDOT.ORG/DOH/OPERATIONS/DP_CHIEF_ENG/ROADSIDE/

US 70 - Rest Area
Craven County, North Carolina
PROJECT #: 42229.3.1

REU ENGINEER: B. Minter Sr.

SHEET DESCRIPTION: Design & Development Plans
Proposed Site Plan

PREL DESIGN DATE: JAN - 2014
CHECKED BY & DATE: T. Davis
FINAL DESIGN DATE: FEB - 2014

SHEET NO: L4
TOTAL SHEET NO: 8

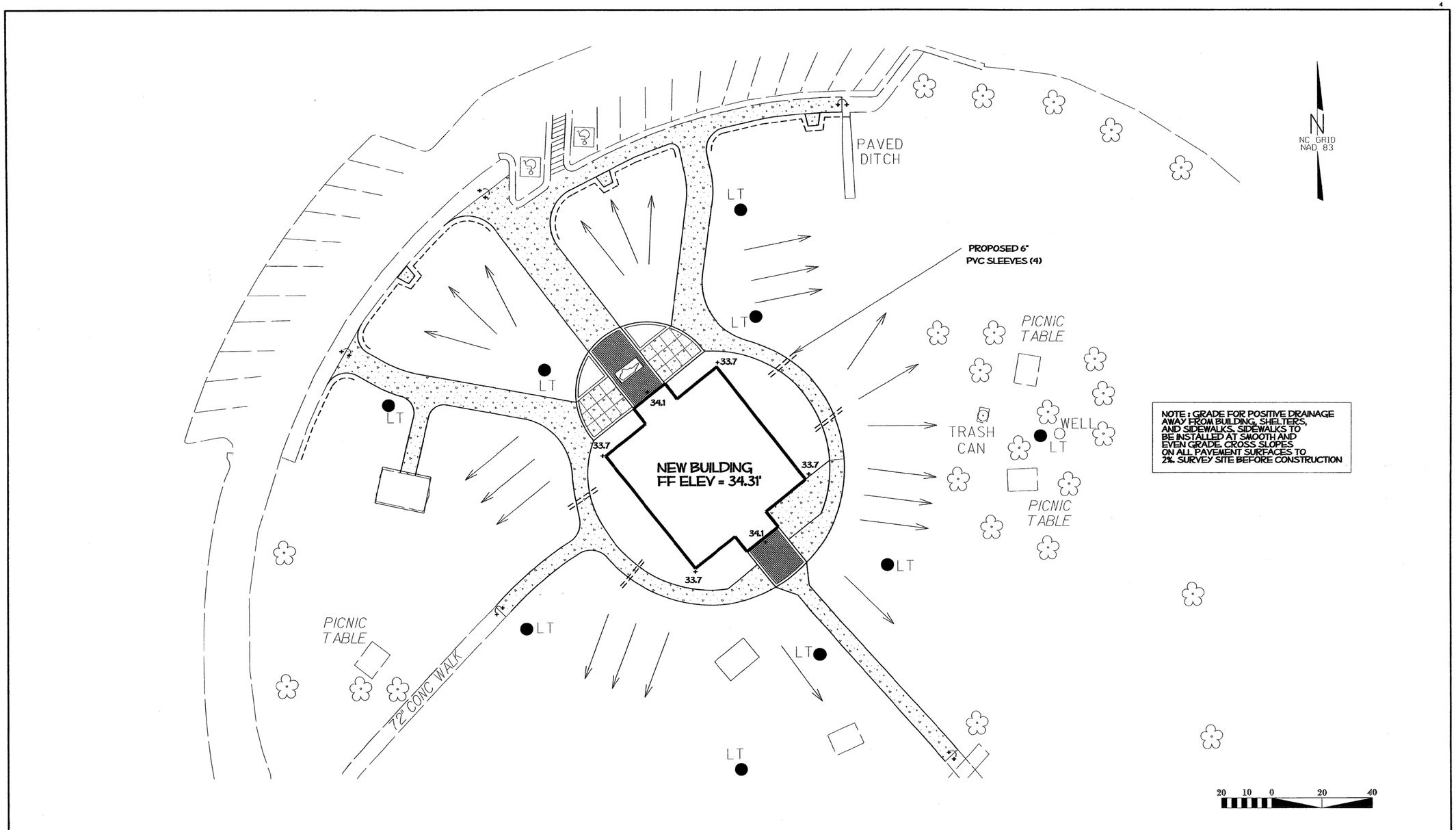

NOTE : GRADE FOR POSITIVE DRAINAGE AWAY FROM BUILDING, SHELTERS, AND SIDEWALKS. SIDEWALKS TO BE INSTALLED AT SMOOTH AND EVEN GRADE. CROSS SLOPES ON ALL PAVEMENT SURFACES TO 2%. SURVEY SITE BEFORE CONSTRUCTION

NCDOT - ROADSIDE ENVIRONMENTAL UNIT
LANDSCAPE DESIGN & DEVELOPMENT
1557 MAIL SERVICE CENTER, RALEIGH, NC 27699-1557
PH: 919-707-2920 FAX: 919-715-2554
HTTP://WWW.NCDOT.ORG/DOH/OPERATIONS/DP_CHIEF_ENG/ROADSIDE/

US 70 - Rest Area
Craven County, North Carolina
PROJECT #: 42229.3.1

REU ENGINEER: B. Minter Sr.

SHEET DESCRIPTION: Design & Development Plans
Site Drainage Plan

PREL DESIGN DATE: JAN - 2014
CHECKED BY & DATE: T. Davis
FINAL DESIGN DATE: FEB - 2014

SHEET NO: L5
TOTAL SHEET NO: 8

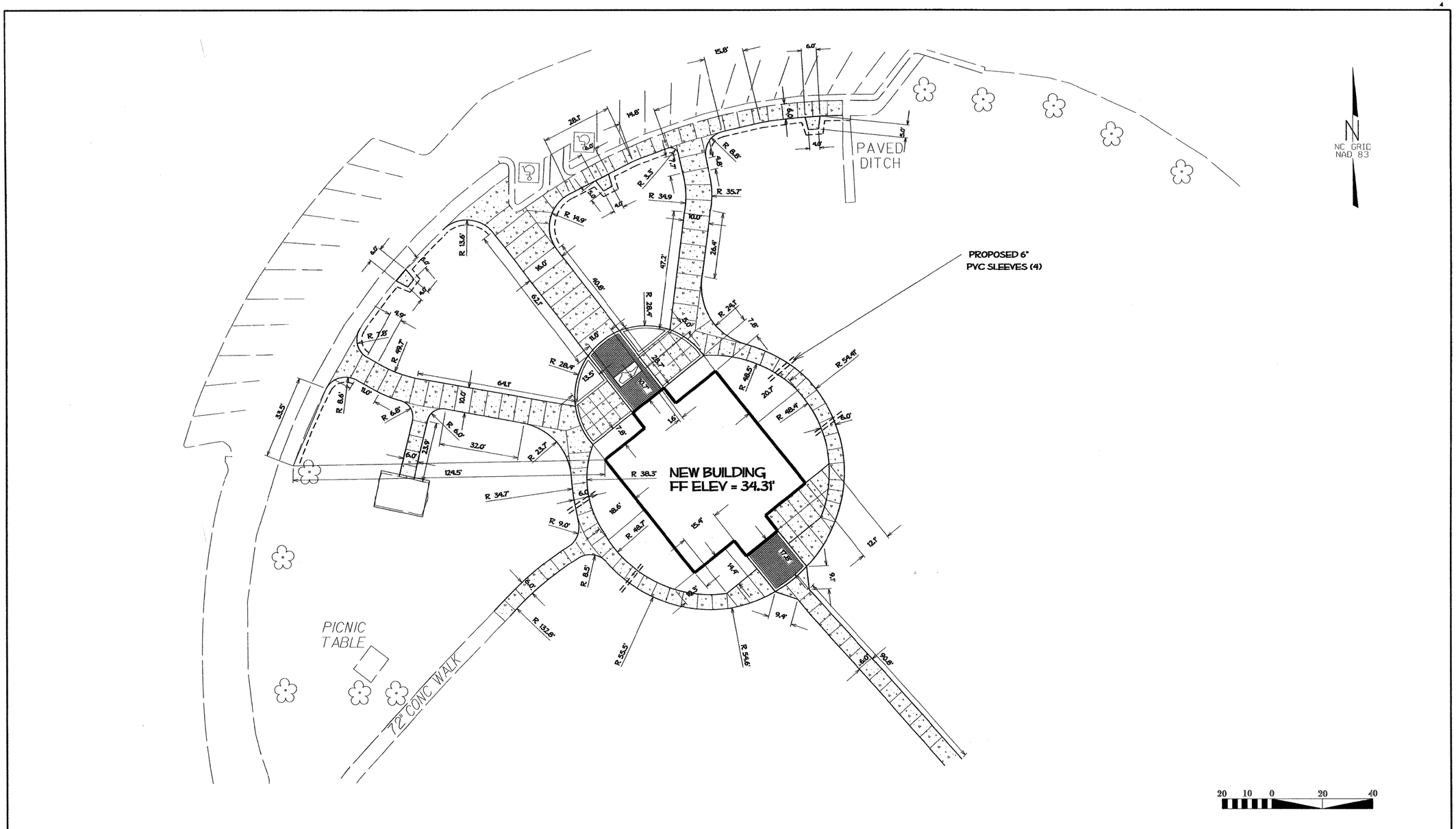

NCDOT - ROADSIDE ENVIRONMENTAL UNIT
LANDSCAPE DESIGN & DEVELOPMENT
1557 MAIL SERVICE CENTER, RALEIGH, NC 27699-1557
PH: 919-707-2920 FAX: 919-715-2554
HTTP://WWW.NCDOT.ORG/DOH/OPERATIONS/DP_CHIEF_ENG/ROADSIDE/

US 70 - Rest Area
Craven County, North Carolina
PROJECT #: 42229.3.1

NORTH CAROLINA LANDSCAPE ARCHITECT 1447 3.11.14 ROBERT N. KOPETSKY

REU ENGINEER: B. Minter Sr.

SHEET DESCRIPTION: Design & Development Plans
Sidewalk Layout Plan

PREL DESIGN DATE: JAN - 2014
CHECKED BY & DATE: T. Davis
FINAL DESIGN DATE: FEB - 2014

STATE OF NORTH CAROLINA DEPARTMENT OF TRANSPORTATION

SHEET NO: L6
TOTAL SHEET NO: 8

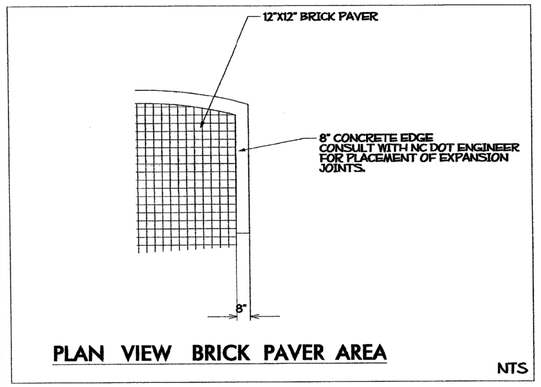

PLAN VIEW BRICK PAVER AREA

NTS

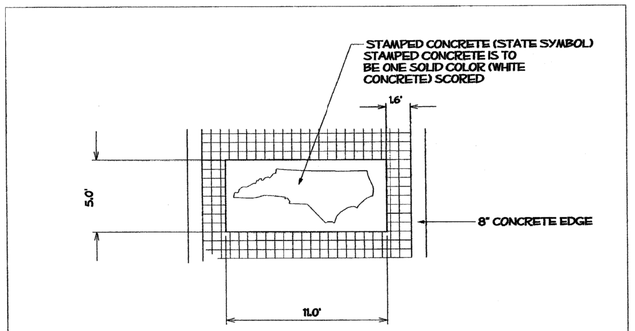

STAMPED CONCRETE BRICK PAVER BAND PLAN VIEW

NTS

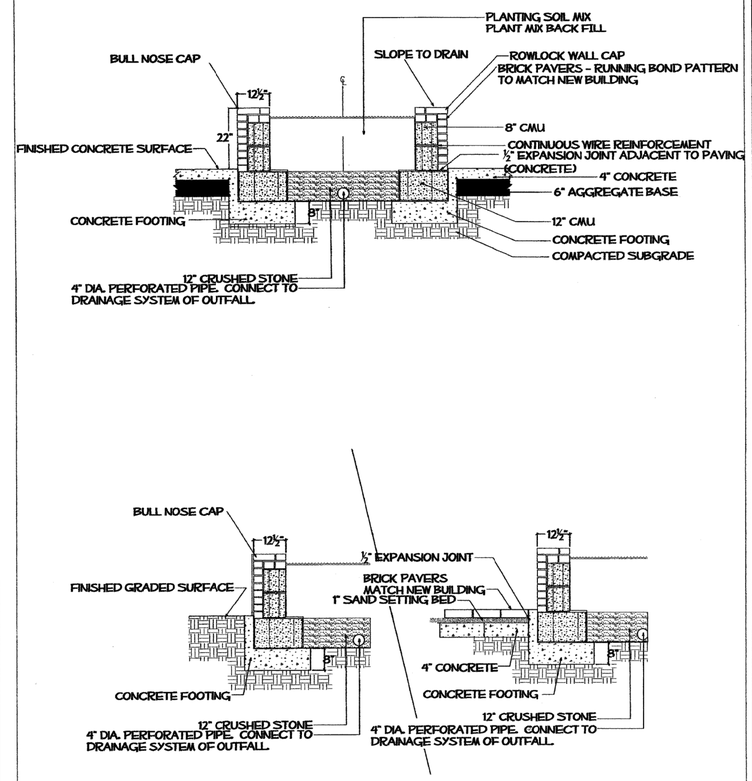

TYPICAL SECTIONS THOUGH BRICK SEATING WALL PLANTER

NTS

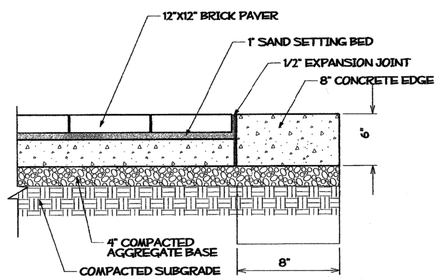

TYPICAL BRICK PAVER BAND

NTS

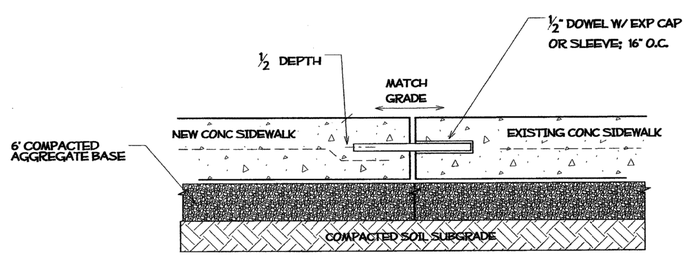

MATCHING NEW CONC SIDEWALK TO EXISTING

FOR ALL LOCATIONS WHERE EXISTING SIDEWALK ADJOINS NEW CONC
- CONSULT ENGINEER -

NTS

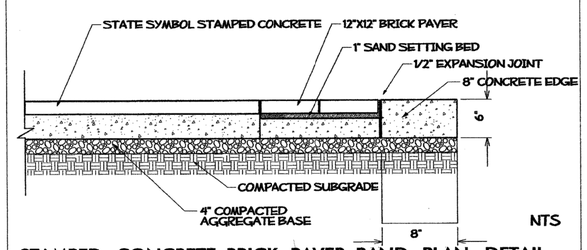

STAMPED CONCRETE BRICK PAVER BAND PLAN DETAIL

NTS

NCDOT - ROADSIDE ENVIRONMENTAL UNIT
LANDSCAPE DESIGN & DEVELOPMENT
1557 MAIL SERVICE CENTER, RALEIGH, NC 27699-1557
PH: 919-707-2920 FAX: 919-715-2554
HTTP://WWW.NCDOT.ORG/DOH/OPERATIONS/DP_CHIEF_ENG/ROADSIDE/

US 70 - Rest Area
Craven County, North Carolina

PROJECT #: 42229.3.1

REU ENGINEER: B. Minter Sr.

SHEET DESCRIPTION: Design & Development Plans
Detail Plan Sheet

PREL DESIGN DATE: JAN - 2014
CHECKED BY & DATE: T. Davis
FINAL DESIGN DATE: FEB - 2014

SHEET NO: L7
TOTAL SHEET NO: 8

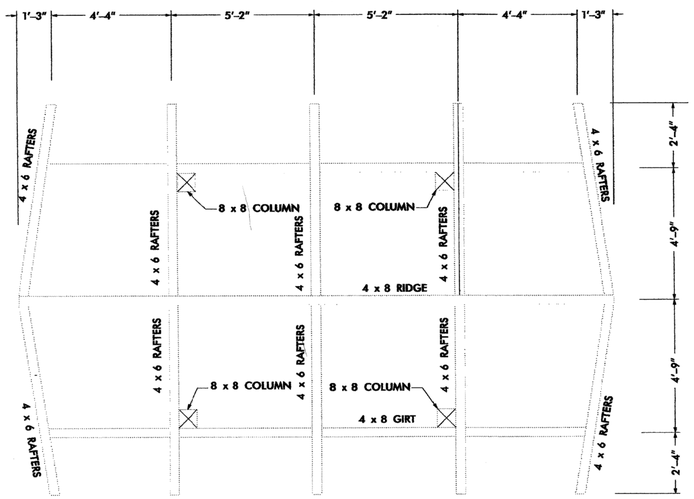

1 ROOF FRAMING PLAN
N.T.S.

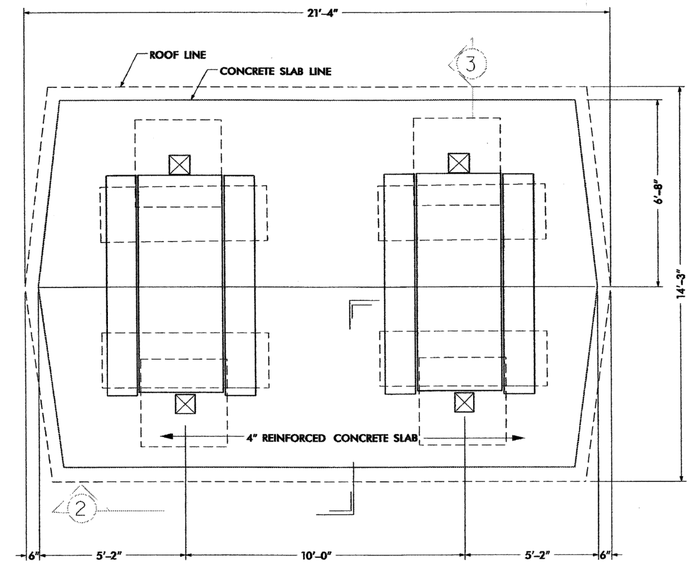

FLOOR & ROOF PLAN
N.T.S.

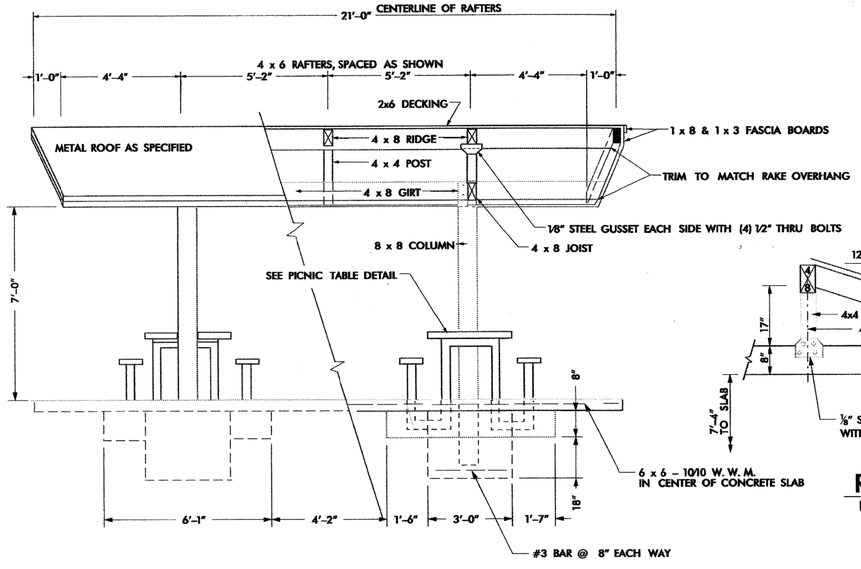

2 SECTION VIEW
N.T.S.

NOTE:
METAL ROOF TO MATCH BUILDING

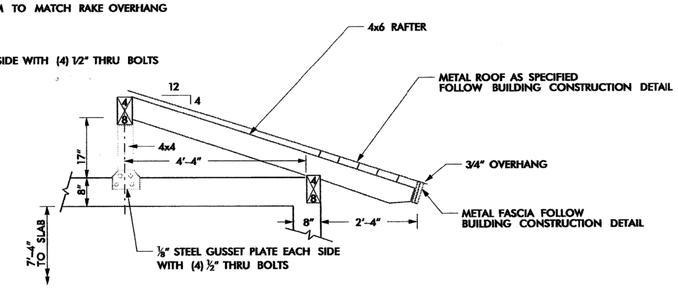

RAFTER DETAIL
N.T.S.

DOUBLE PICNIC SHELTER W/ TABLE

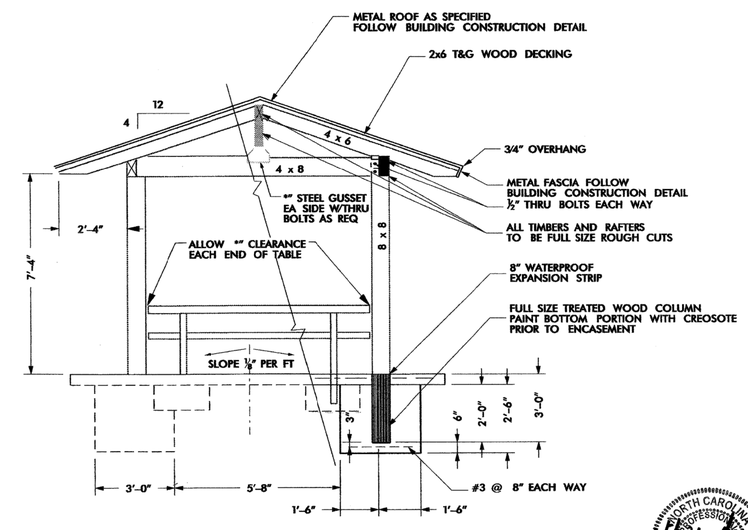

3 SECTION VIEW
N.T.S.

NORTH CAROLINA PROFESSIONAL SEAL 17326 ENGINEER MICHAEL D. MOUNTCASTLE
3-12-14

NCDOT ROADSIDE ENVIRONMENTAL UNIT

LANDSCAPE DESIGN & DEVELOPMENT
1557 MAIL SERVICE CENTER, RALEIGH, NC 27699-1557
PH: 919-707-2920 FAX: 919-715-2554
HTTP://WWW.NCDOT.ORG/DOH/OPERATIONS/DP_CHIEF_ENG/ROADSIDE/

US 70 - Rest Area
Craven County, North Carolina
PROJECT #: 42229.3.1

REU ENGINEER: B. Minter Sr.

SHEET DESCRIPTION:
Design & Development Plans
Picnic Shelter Detail Sheet

PREL DESIGN DATE: JAN - 2014
CHECKED BY & DATE: T. Davis
FINAL DESIGN DATE: FEB - 2014

STATE OF NORTH CAROLINA DEPARTMENT OF TRANSPORTATION

SHEET NO: L8
TOTAL SHEET NO: 8

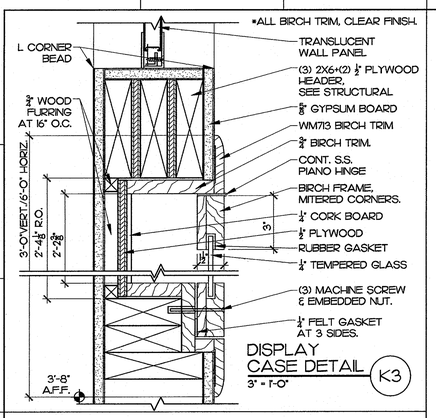

DISPLAY CASE DETAIL K3
3" = 1'-0"

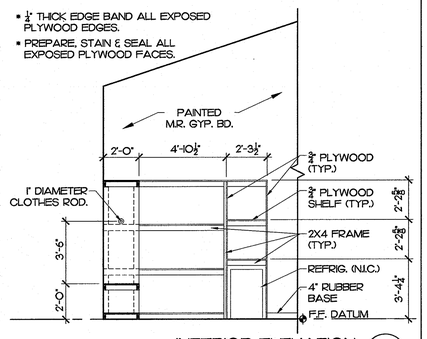

INTERIOR ELEVATION G3
1/4" = 1'-0"

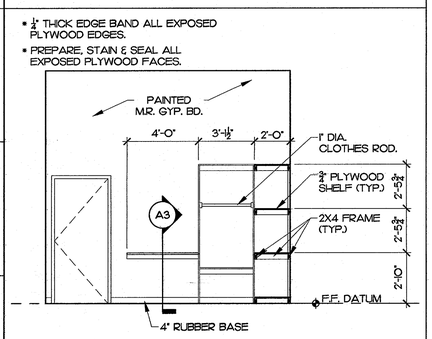

INTERIOR ELEVATION D3
1/4" = 1'-0"

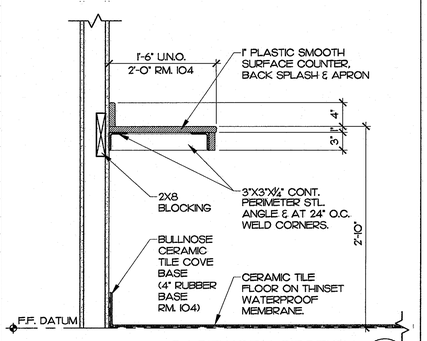

CASEWORK SECTION A3
1" = 1'-0"

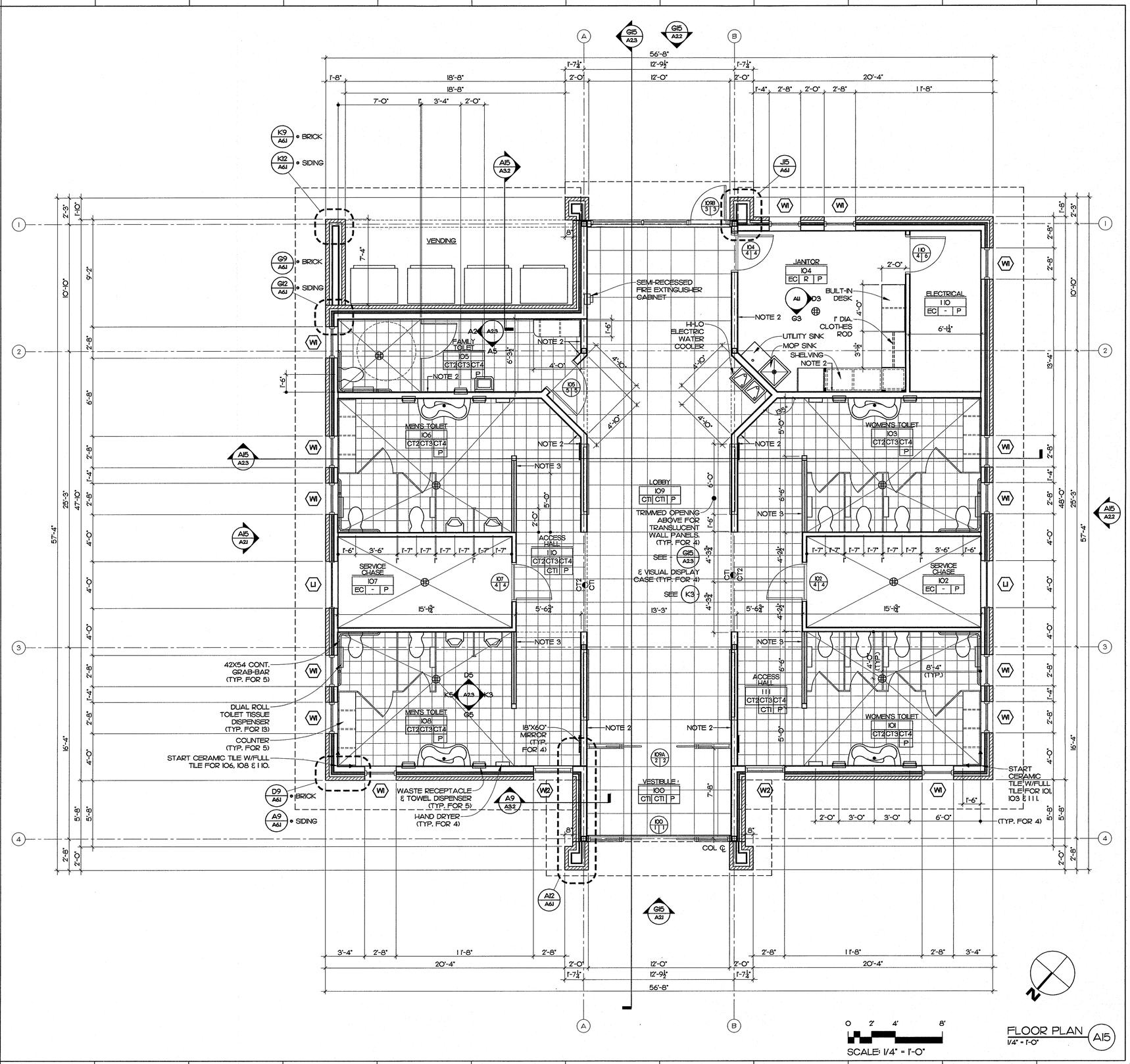

FLOOR PLAN A15
1/4" = 1'-0"

MATERIALS KEYING LEGEND

GENERAL NOTES

1. ALL INTERIOR PARTITIONS TO BE 2X4 AT 16" O.C. WOOD STUDS CONTINUOUS TO ROOF JOISTS ABOVE W/5/8" GYP. BOARD BOTH SIDES, U.N.O. PROVIDE 3" SOUND ATTENUATION BLANKETS IN ALL INTERIOR PARTITIONS.
2. PROVIDE 2X6 WOOD STUDS AT 16" O.C. CONTINUOUS TO ROOF JOISTS OR STRUCTURE ABOVE W/5/8" GYP. BOARD BOTH SIDES.
3. PROVIDE 2X4 AT 16" O.C. WOOD STUDS TO 8'-0" W/5/8" M.R. GYP. BOARD BOTH SIDES. EXTEND (2) 2X4 POST AT END OF WALL TO DECK & WRAP W/GYP.BD. PROVIDE 1" THICK TRANSLUCENT WALL PANEL ABOVE WALL TO CEILING. SEE A12/A3.1
4. PROVIDE CEMENTITIOUS TILE BACKING PANEL IN LIEU OF GYPSUM BOARD WHERE CERAMIC WALL TILE IS SCHEDULED.
5. PROVIDE MOISTURE-RESISTANT GYPSUM BOARD IN ALL TOILET ROOMS, JANITORS CLOSETS, MECHANICAL ROOMS & WET AREAS IN LIEU OF GYPSUM BOARD INDICATED.
6. INTERIOR DIMENSIONS ARE TO FACE OF STUD U.N.O. W/DOT LEADER ✦ (FINISHED).

KEY PLAN

PROJECT 42229.1.1 (K-5101)

NO	REVISION	DATE

SEAL: JOHN K. FARKAS, REGISTERED ARCHITECT, 5922, 3.19.2014

JKF ARCHITECTURE
P.O. BOX 20662 GREENVILLE, NC 27858 PHONE 252-355-1068

NCDOT US 70 REST AREA RENOVATIONS

NEW BERN, CRAVEN COUNTY, NC

DRAWING TITLE: FLOOR PLAN

SCALE	AS NOTED
DRAWN	DJH/MCZ
CHECKED	JKF
DATE	1-10-2014
PROJECT NO.	2013-18
DRAWING NO	A1.1

© COPYRIGHT, JKF ARCHITECTURE P.C. JOHN K. FARKAS, AIA

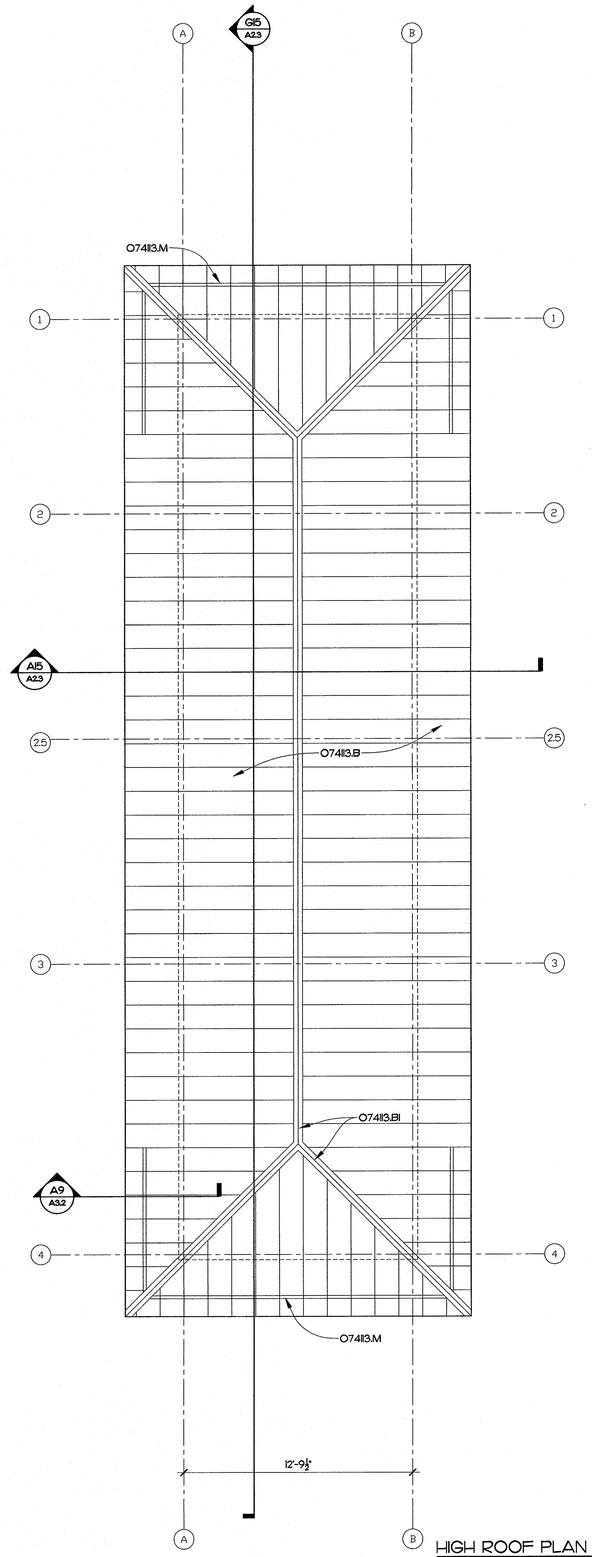

HIGH ROOF PLAN (A5)
1/4" = 1'-0"

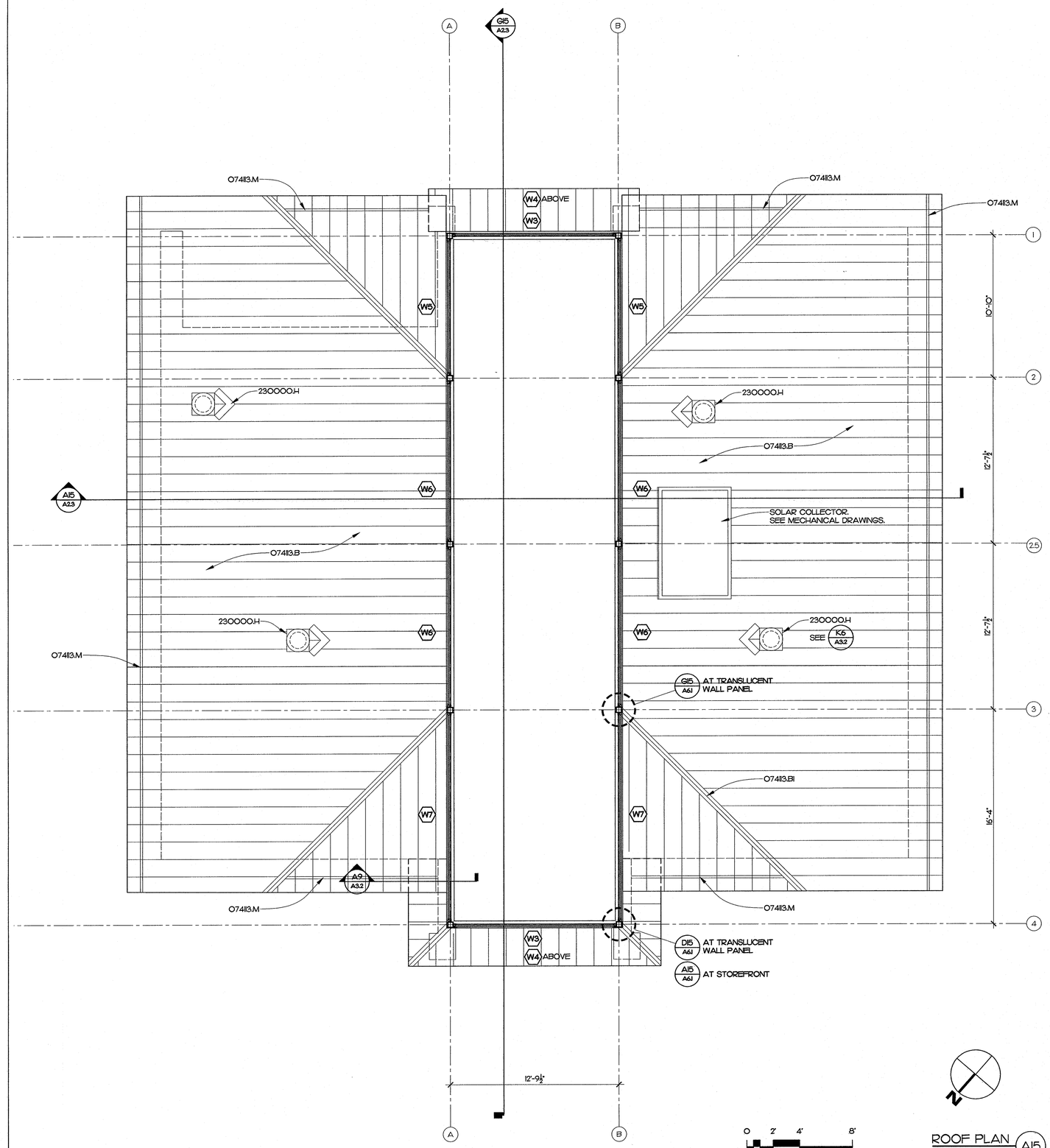

ROOF PLAN (A15)
1/4" = 1'-0"

SCALE: 1/4" = 1'-0"

MATERIALS KEYING LEGEND

07413.B -METAL ROOF, STANDING SEAM
07413.BI -METAL ROOF, STANDING SEAM, RIDGE CAP
07413.M -SNOW GUARD
230000.H -ROOF TOP EXHAUST UNIT ON CURB - SEE H-VAC

GENERAL NOTES

KEY PLAN

PROJECT 42229.1.1 (K-5101)

NO	REVISION	DATE

SEAL: JOHN K. FARKAS, REGISTERED ARCHITECT, 5922, 3-9-2014, GREENVILLE

JKF ARCHITECTURE
P.O. BOX 20662 GREENVILLE NC 27858 PHONE 252-355-1068

NCDOT US 70 REST AREA RENOVATIONS
NEW BERN, CRAVEN COUNTY, NC

DRAWING TITLE: ROOF PLAN

SCALE	1/4" = 1'-0"
DRAWN	DJH/MCZ
CHECKED	JKF
DATE	1-10-2014
PROJECT NO.	2013-18
DRAWING NO	A1.2

© COPYRIGHT, JKF ARCHITECTURE P.C. JOHN K. FARKAS, AIA

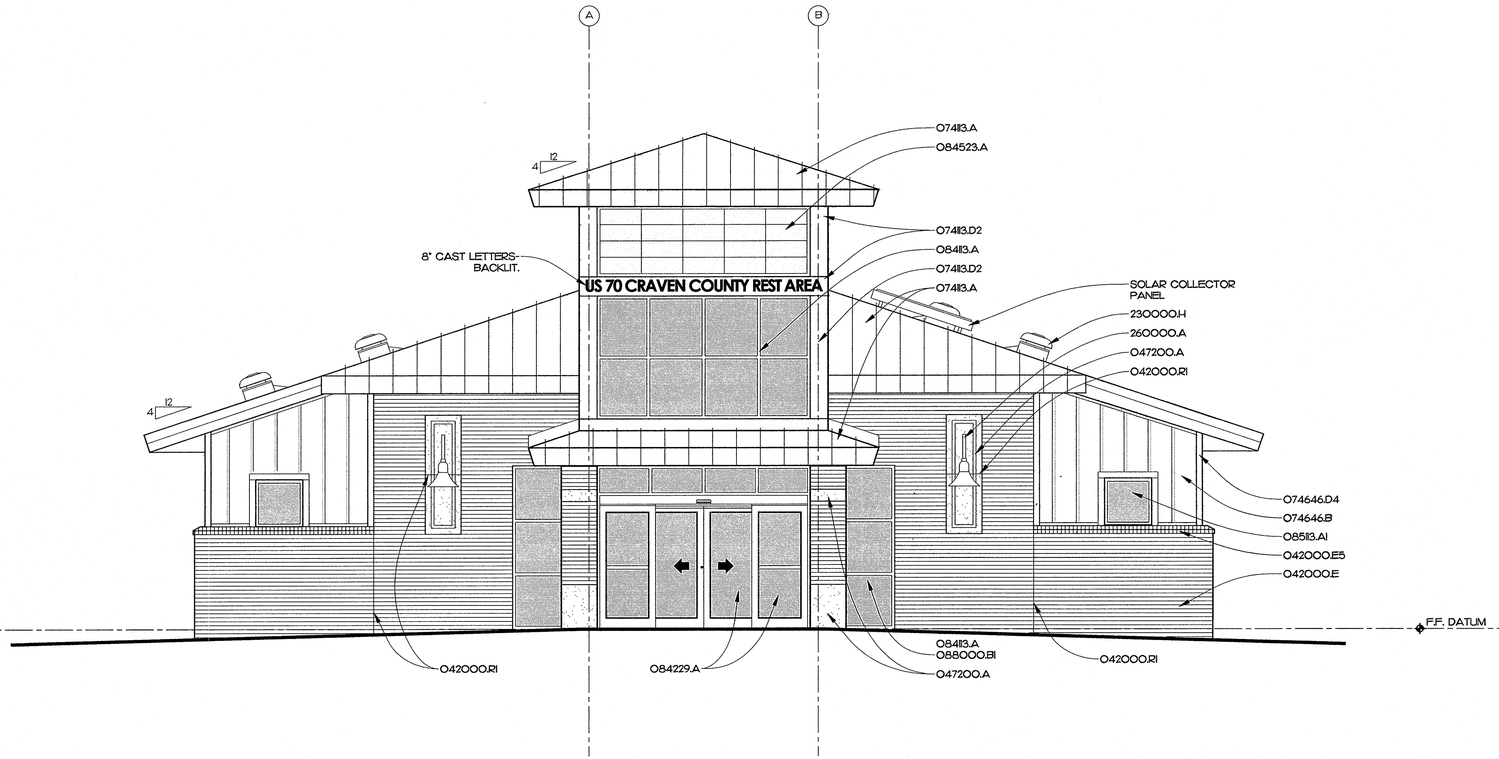

NORTH ELEVATION G15
1/4" = 1'-0"

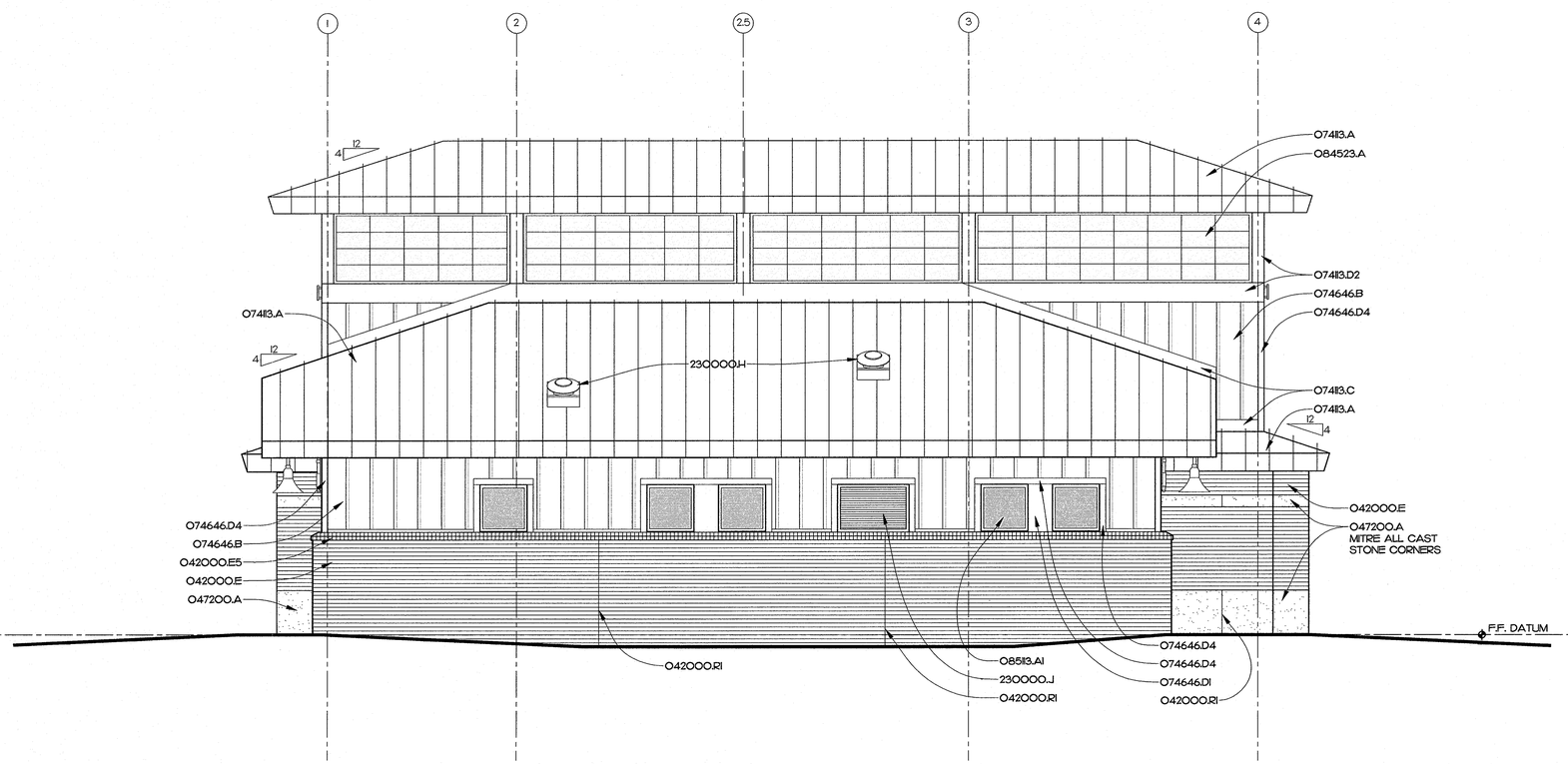

EAST ELEVATION A15
1/4" = 1'-0"

MATERIALS KEYING LEGEND

042000.E	- FACE BRICK
042000.E5	- FACE BRICK, ROWLOCK SILL
042000.R1	- CONTROL JOINT
042000.R2	- CONTROL JOINT, INSIDE CORNER
047200.A	- CAST STONE MASONRY
074113.A	- METAL ROOF, STANDING SEAM SYSTEM
074113.C	- METAL FLASHING
074113.D2	- METAL TRIM
074646.B	- FIBER-CEMENT SIDING, BOARD AND BATTEN
074646.D1	- FIBER-CEMENT SIDING, TRIM BOARD IX
074646.D4	- FIBER-CEMENT SIDING, TRIM BOARD IX4
084113.A	- STOREFRONT FRAMING, THERMALLY BROKEN
084229.A	- AUTOMATIC SLIDING DOOR ASSEMBLY
084523.A	- FIBERGLASS-SANDWICH PANEL ASSEMBLY
085113.A1	- ALUMINUM WINDOW ASSEMBLY, FIXED WINDOW
088000.B1	- 1" INSULATING GLASS-LOW E
230000.H	- ROOF TOP EXHAUST UNIT ON CURB-SEE HVAC
230000.J	- MECH. LOUVER-SEE HVAC DRAWINGS
260000.A	- EXTERIOR LIGHT FIXTURE

GENERAL NOTES

KEY PLAN

PROJECT 42229.1.1 (K-5101)

NO	REVISION	DATE

SEAL
JOHN K. FARKAS REGISTERED ARCHITECT 5922 GREENVILLE 3-19-2014

JKF ARCHITECTURE

P.O. BOX 20662 GREENVILLE, NC 27858 PHONE 252-355-1068

NCDOT US 70 REST AREA RENOVATIONS
NEW BERN, CRAVEN COUNTY, NC

DRAWING TITLE
EXTERIOR ELEVATIONS

SCALE	1/4" = 1'-0"
DRAWN	DJH
CHECKED	JKF
DATE	110-2014
PROJECT NO.	2013-18
DRAWING NO	A2.1

© COPYRIGHT, JKF ARCHITECTURE PC, JOHN K. FARKAS, AIA

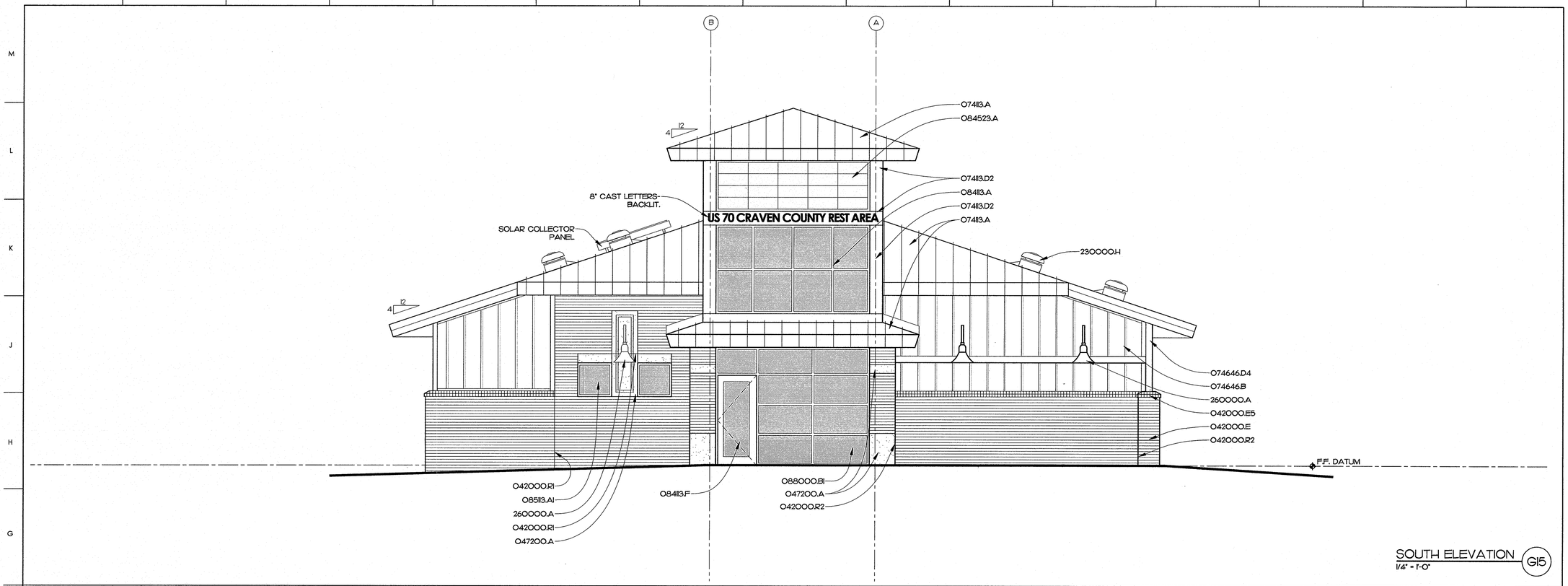

SOUTH ELEVATION (G15)
1/4" = 1'-0"

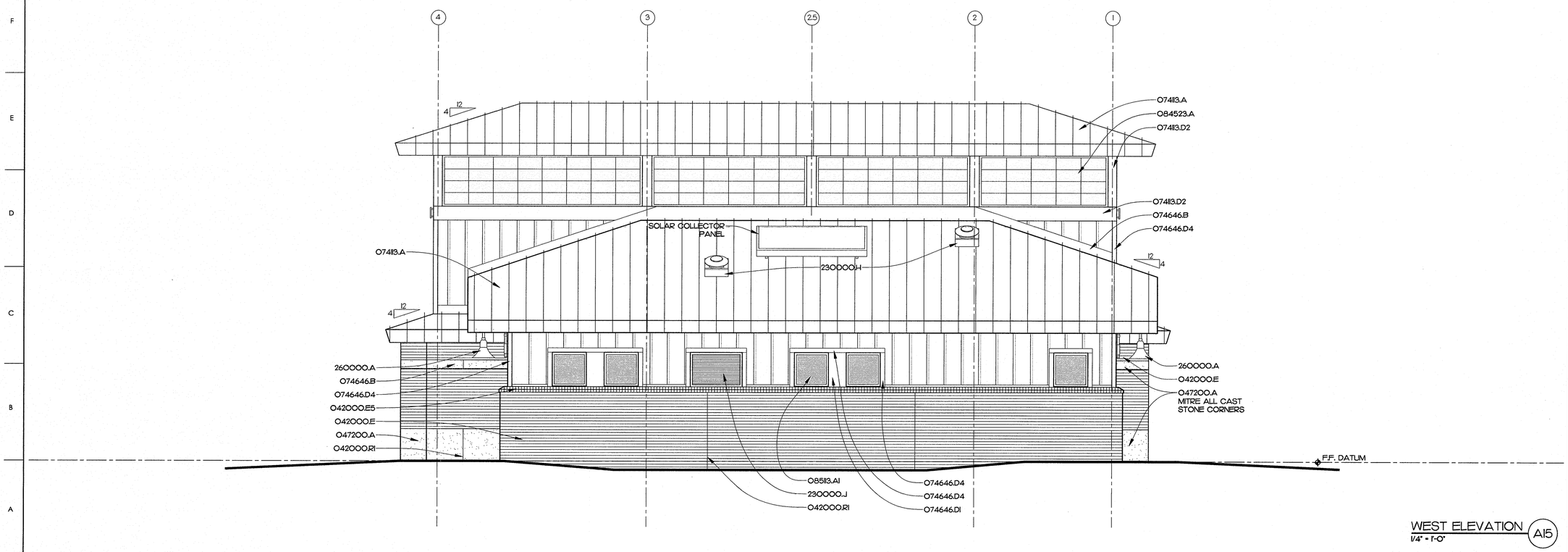

WEST ELEVATION (A15)
1/4" = 1'-0"

MATERIALS KEYING LEGEND

042000.E	- FACE BRICK
042000.E5	- FACE BRICK, ROWLOCK SILL
042000.R1	- CONTROL JOINT
042000.R2	- CONTROL JOINT, INSIDE CORNER
047200.A	- CAST STONE MASONRY
074113.A	- METAL ROOF, STANDING SEAM SYSTEM
074113.D2	- METAL TRIM
074646.B	- FIBER-CEMENT SIDING, BOARD AND BATTEN
074646.D1	- FIBER-CEMENT SIDING, TRIM BOARD IX
074646.D4	- FIBER-CEMENT SIDING, TRIM BOARD IX4
084113.A	- STOREFRONT FRAMING, THERMALLY BROKEN
084113.F	- ALUMINUM STILE & RAIL DOOR
084523.A	- FIBERGLASS-SANDWICH PANEL ASSEMBLY
085113.A1	- ALUMINUM WINDOW ASSEMBLY, FIXED WINDOW
088000.B1	- 1" INSULATING GLASS-LOW E
230000.H	- ROOF TOP EXHAUST UNIT ON CURB - SEE HVAC
230000.J	- MECH. LOUVER-SEE HVAC DRAWINGS
260000.A	- EXTERIOR LIGHT FIXTURE

GENERAL NOTES

KEY PLAN

PROJECT 42229.1.1 (K-5101)

NO	REVISION	DATE

SEAL

JOHN K. FARKAS REGISTERED ARCHITECT 3-19-2014 5922 STATE OF NORTH CAROLINA

JKF ARCHITECTURE

P.O. BOX 20642 GREENVILLE NC 27858 PHONE 252-355-1068

NCDOT US 70 REST AREA RENOVATIONS
NEW BERN, CRAVEN COUNTY, NC

DRAWING TITLE
EXTERIOR ELEVATIONS

SCALE	1/4" = 1'-0"
DRAWN	DJH
CHECKED	JKF
DATE	10-2014
PROJECT NO.	2013-18
DRAWING NO	A2.2

© COPYRIGHT, JKF ARCHITECTURE P.C. JOHN K. FARKAS, AIA

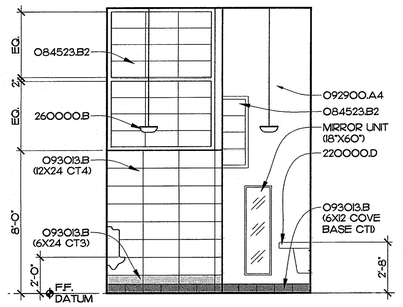

INTERIOR ELEVATION K3
1/4" = 1'-0"

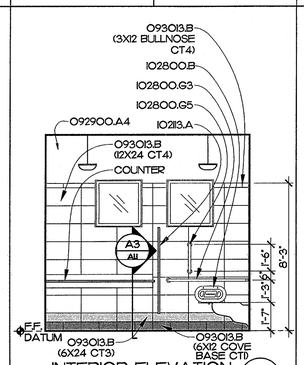

INTERIOR ELEVATION K5
1/4" = 1'-0"

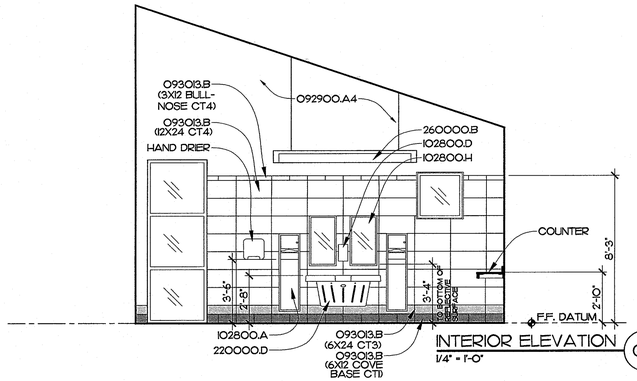

INTERIOR ELEVATION G5
1/4" = 1'-0"

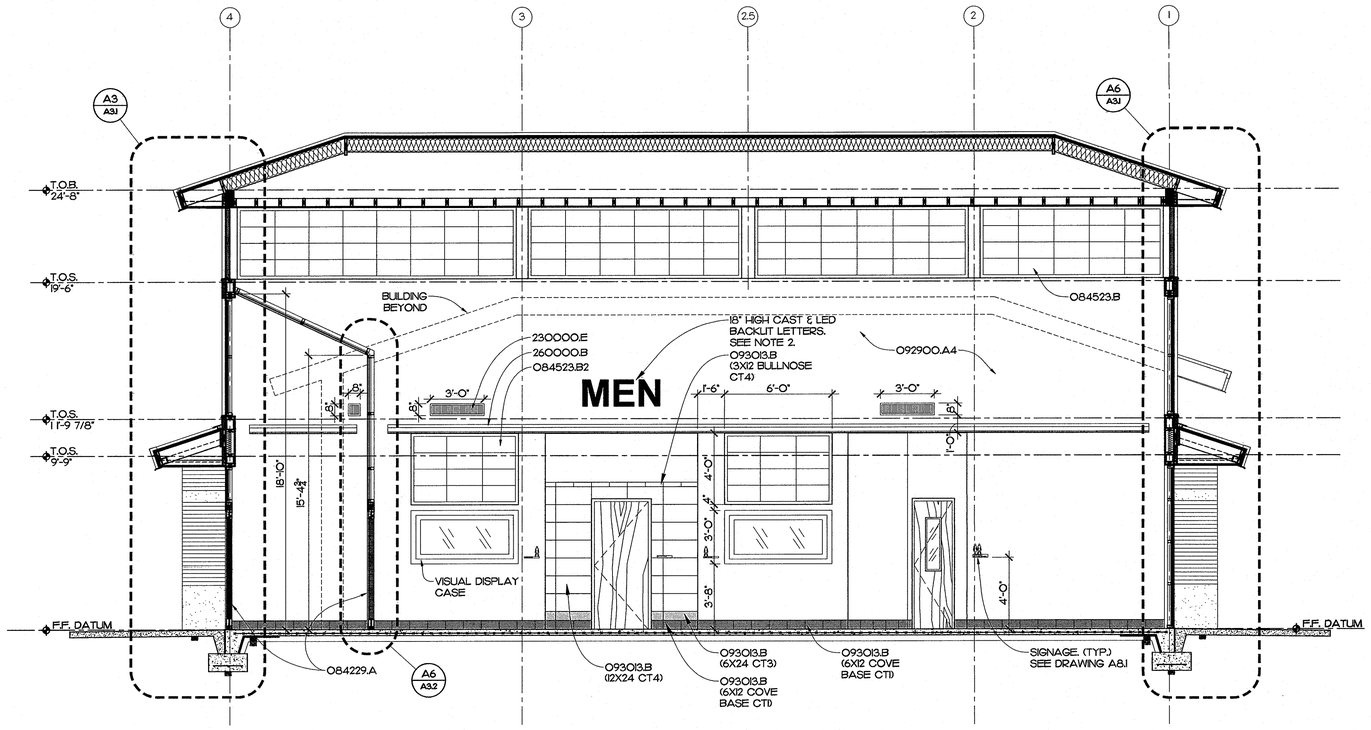

BUILDING SECTION G15
1/4" = 1'-0"

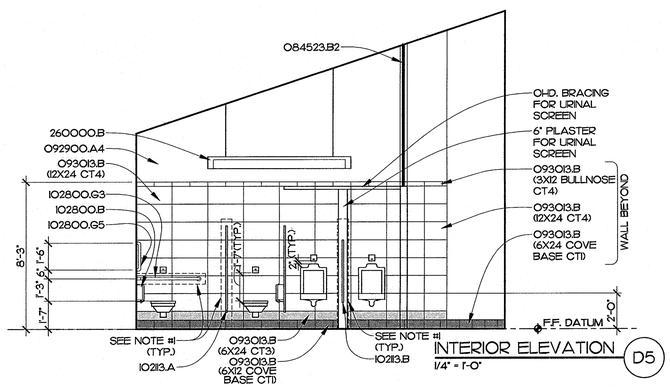

INTERIOR ELEVATION D5
1/4" = 1'-0"

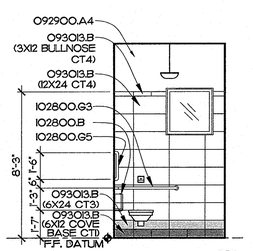

INTERIOR ELEVATION A2
1/4" = 1'-0"

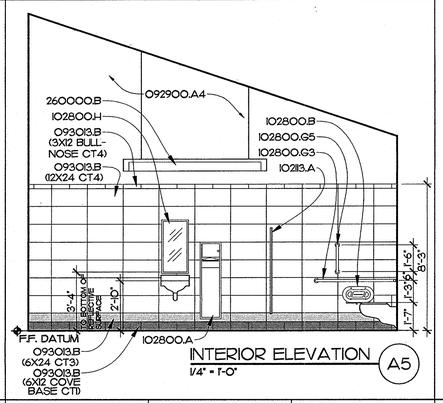

INTERIOR ELEVATION A5
1/4" = 1'-0"

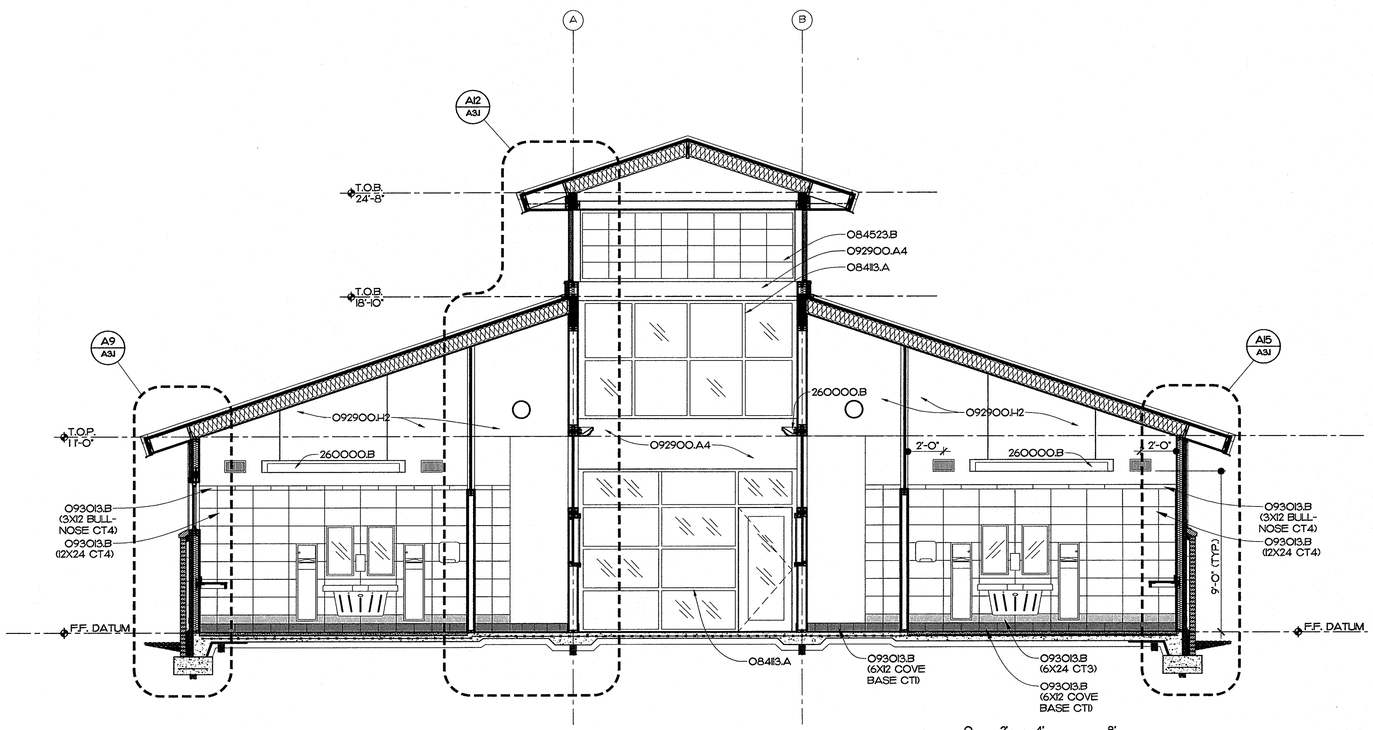

BUILDING SECTION A15
1/4" = 1'-0"

0 2' 4' 8'
SCALE: 1/4" = 1'-0"

MATERIALS KEYING LEGEND

084113.A	-STOREFRONT FRAMING, THERMALLY BROKEN
084229.A	-AUTOMATIC SLIDING GLASS DOOR ASSEMBLY
084523.B	-FIBERGLASS-SANDWICH PANEL ASSEMBLY, 2-3/4" THICK
084523.B2	-FIBERGLASS-SANDWICH PANEL ASSEMBLY, 1" THICK
092900.A4	5/8" GYPSUM WALLBOARD
092900.H2	-MR. GYPSUM BOARD, 5/8" THICK
093013.B	-CERAMIC TILE
102113.A	-TOILET COMPARTMENT
102113.B	-URINAL SCREEN
102800.A	-TOWEL DISPENSER/WASTE RECEPTACLE
102800.B	-TOILET TISSUE DISPENSER
102800.D	-SOAP DISPENSER
102800.G3	-36X54 GRAB BAR
102800.G5	-18" VERT. GRAB BAR
102800.H	-MIRROR UNIT, 18X32 (MOUNT 40" MAX TO REFLECTING SURFACE)
220000.D	-WALL HUNG LAVATORY
230000.E	-SUPPLY DIFFUSER
260000.B	-INTERIOR LIGHT FIXTURE

GENERAL NOTES

1. PROVIDE SOLID 2X8 BLOCKING BEHIND ALL TOILET PARTITIONS, URINAL SCREENS, GRAB BARS, RESTROOM ACCESSORIES, AND AS NEEDED.
2. PROVIDE BACKLIT CAST LETTERS FOR "WOMEN" ON OPPOSITE SIDE ENTRY TO WOMENS TOILETS. ALL LETTERS TO BE HELVETICA BOLD.
3. INTERIOR DIMENSIONS ARE TO FACE OF STUD U.N.O. W/DOT LEADER ✦ (FINISHED).

KEY PLAN

PROJECT 42229.1.1 (K-5101)

NO	REVISION	DATE

SEAL: JOHN K. FARKAS REGISTERED ARCHITECT GREENVILLE, N.C. 3-19-2014 5922

JKF ARCHITECTURE

P.O. BOX 20662 GREENVILLE, NC 27858 PHONE 252-355-1068

NCDOT US 70 REST AREA RENOVATIONS
NEW BERN, CRAVEN COUNTY, NC

DRAWING TITLE: BUILDING SECTIONS & INTERIOR ELEVATIONS

SCALE	1/4" = 1'-0"
DRAWN	DJH
CHECKED	JKF
DATE	110-2014
PROJECT NO.	2013-18
DRAWING NO	A2.3

© COPYRIGHT, JKF ARCHITECTURE P.C. JOHN K. FARKAS, AIA

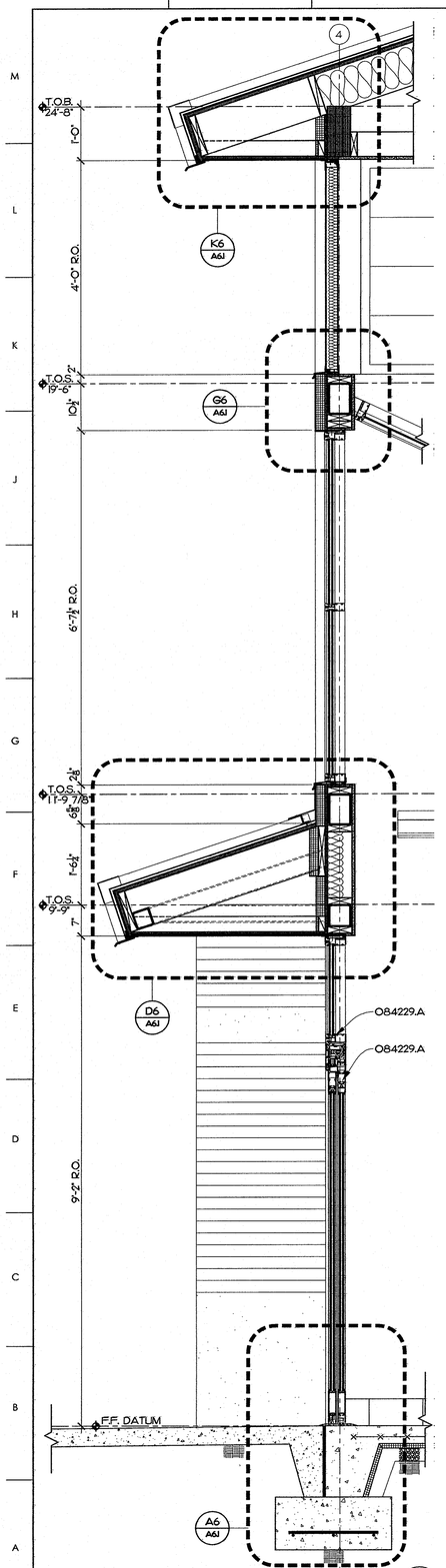

- FOR TYPICAL KEYNOTES SEE WALL SECTION A15 & A6

WALL SECTION A3
3/4" = 1'-0"

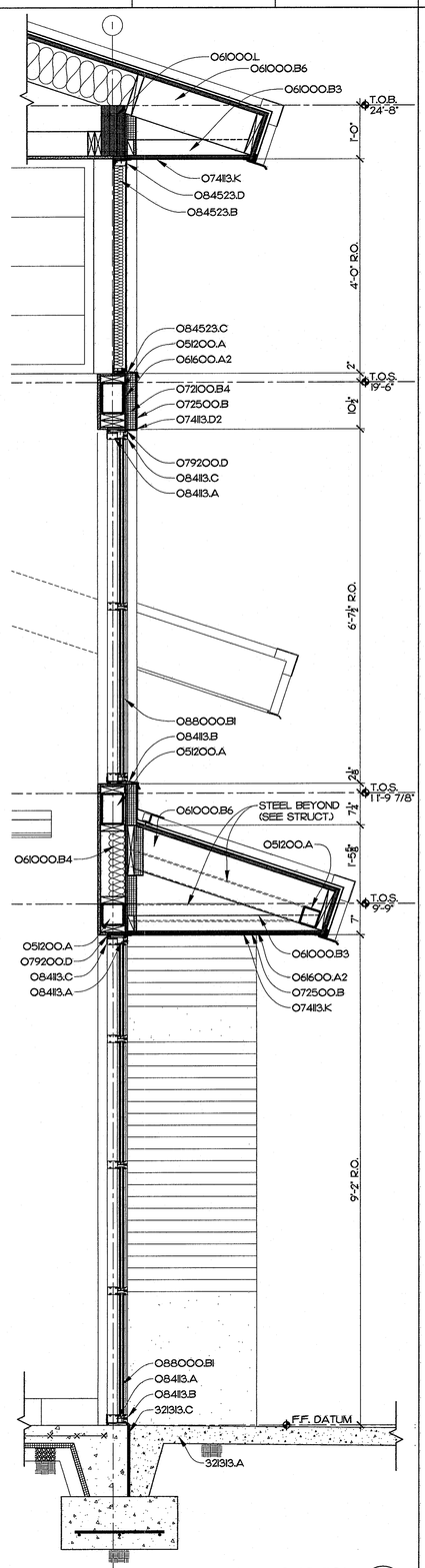

- FOR TYPICAL KEYNOTES SEE WALL SECTION A15

WALL SECTION A6
3/4" = 1'-0"

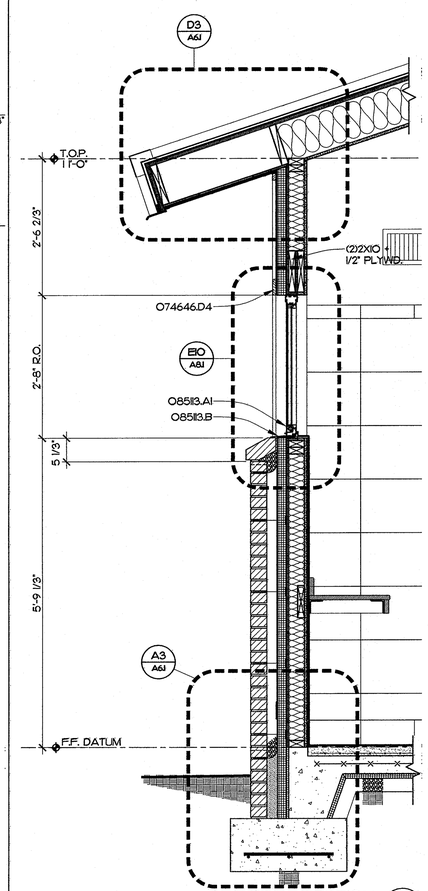

- FOR TYPICAL KEYNOTES SEE WALL SECTION A15

WALL SECTION A9
3/4" = 1'-0"

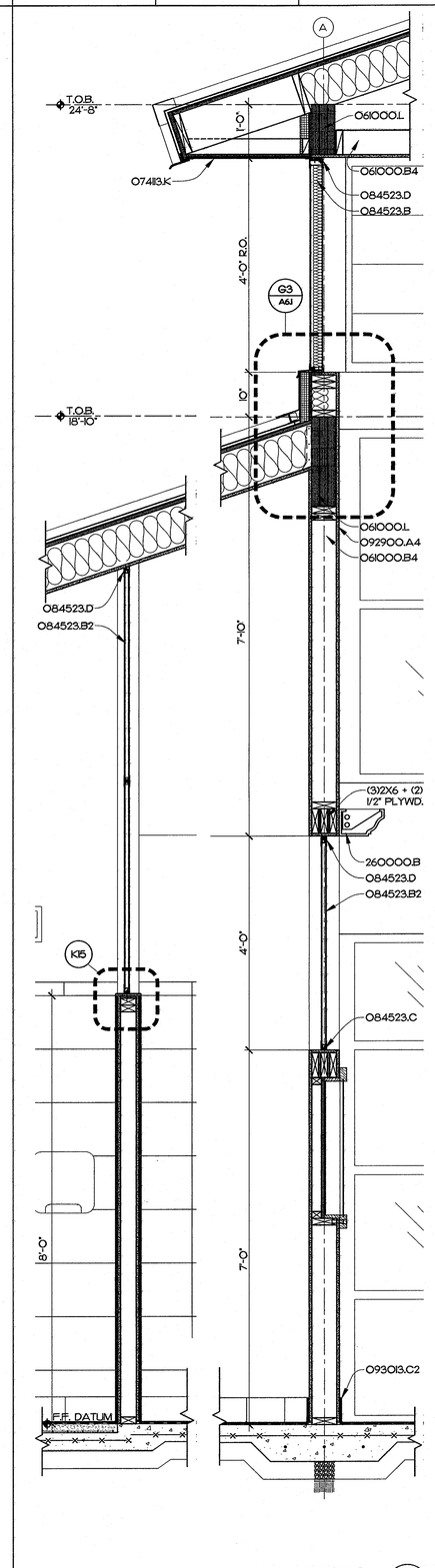

- FOR TYPICAL KEYNOTES SEE WALL SECTION A15

WALL SECTION A12
3/4" = 1'-0"

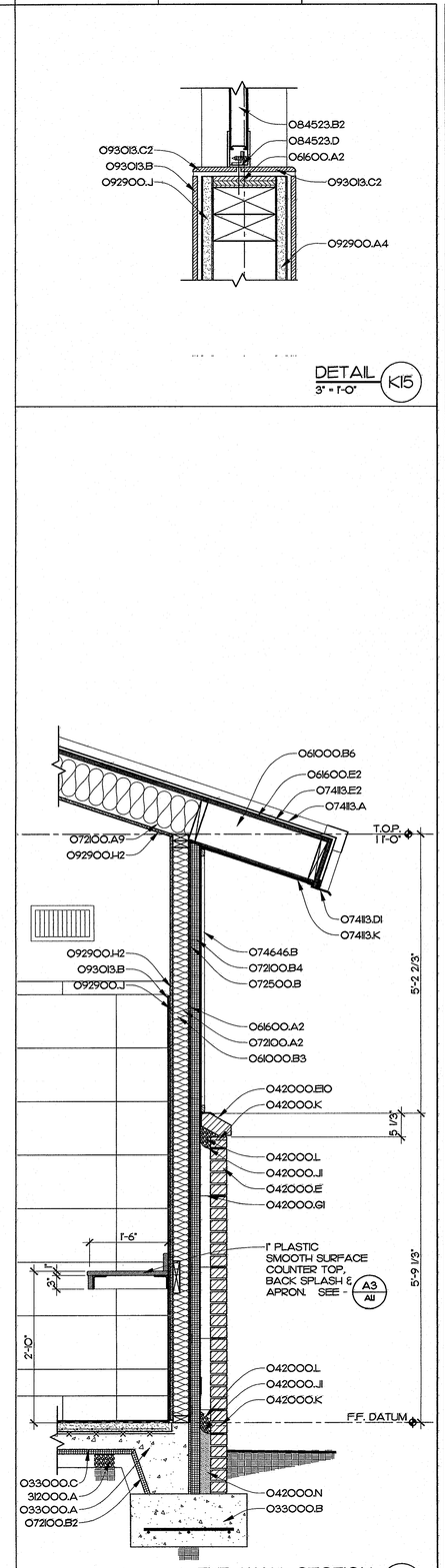

DETAIL K15
3" = 1'-0"

TYP. WALL SECTION A15
3/4" = 1'-0"

MATERIALS KEYING LEGEND

033000.A	-CONCRETE SLAB ON GRADE, SEE STRUCTURAL
033000.B	-CONCRETE FOOTING, SEE STRUCTURAL
033000.C	-VAPOR BARRIER
042000.E	-FACE BRICK
042000.E10	-FACE BRICK, SOLDIER COURSE SILL, SPECIAL SHAPE
042000.G1	-HORIZONTAL JOINT REINFORCING AT 16" O.C. VERT.
042000.J1	-THRU-WALL FABRIC FLASHING
042000.K	-WEEP/VENT
042000.L	-CAVITY DRAINAGE MATERIAL
042000.N	-GROUT SOLID
051200.A	-STRUCTURAL STEEL, SEE STRUCTURAL DRAWINGS
061000.B3	-2X4 AT 16" O.C.
061000.B4	-2X6 AT 16" O.C.
061000.B6	-2X10 AT 16" O.C.
061000.J	-BLOCKING
061000.L	-PARALLEL STRAND LUMBER - SEE STRUCTURAL
061600.A2	-PLYWOOD SHEATHING, 1/2" THICK
061600.E2	-PLYWOOD ROOF SHEATHING, 3/4" T&G
072100.A2	-R-13 BATT INSULATION
072100.A9	-R-38 BATT INSULATION
072100.B2	-1" RIGID INSULATION
072100.B4	-2" RIGID INSULATION
072500.B	-BUILDING WRAP
074113.A	-METAL ROOF, STANDING SEAM SYSTEM
074113.D1	-METAL DRIP
074113.D2	-METAL TRIM
074113.E2	-SELF ADHERING SHEET
074113.K	-METAL SOFFIT PANEL
074646.B	-FIBER-CEMENT SIDING, BOARD AND BATTEN
074646.D4	-FIBER-CEMENT SIDING, TRIM BOARD 1X4
079200.D	-BACKER ROD & SEALANT
084113.A	-STOREFRONT FRAMING, THERMALLY BROKEN
084113.B	-METAL SILL PAN
084113.C	-METAL SUB-FRAME
084229.A	-AUTOMATIC SLIDING DOOR ASSEMBLY
084523.B	-FIBERGLASS-SANDWICH PANEL ASSEMBLY, 2-3/4" THICK
084523.B2	-FIBERGLASS-SANDWICH PANEL ASSEMBLY, 1" THICK
084523.C	-METAL SILL PAN
084523.D	-METAL SUB-FRAME
085113.A1	-ALUMINUM WINDOW ASSEMBLY, FIXED WINDOW
085113.B	-METAL SILL PAN
088000.B1	-1" INSULATING GLASS-LOW E
092900.A4	-5/8" GYPSUM WALLBOARD
092900.H2	-MR. GYPSUM BOARD, 5/8" THICK
092900.J	-CEMENTITIOUS BACKER UNIT
093013.B	-CERAMIC TILE
093013.C2	-CERAMIC TILE, SPECIAL SHAPE, BULLNOSE
260000.B	-INTERIOR LIGHT FIXTURE
312000.A	-POROUS FILL
321313.A	-CONCRETE SIDEWALK, 4" THICK
321313.C	-EXPANSION JOINT

GENERAL NOTES

KEY PLAN

PROJECT 42229.1.1 (K-5101)

NO	REVISION	DATE

SEAL: JOHN K. FARKAS, REGISTERED ARCHITECT, 5922, GREENVILLE, N.C. 3-19-2014

JKF ARCHITECTURE
P.O. BOX 20662 GREENVILLE, NC 27858 PHONE 252-355-1068

NCDOT US 70 REST AREA RENOVATIONS
NEW BERN, CRAVEN COUNTY, NC

DRAWING TITLE: WALL SECTIONS

SCALE	AS NOTED
DRAWN	DJH
CHECKED	JKF
DATE	1-10-2014
PROJECT NO.	2013-18
DRAWING NO	A3.1

© COPYRIGHT, JKF ARCHITECTURE P.C. JOHN K. FARKAS, AIA

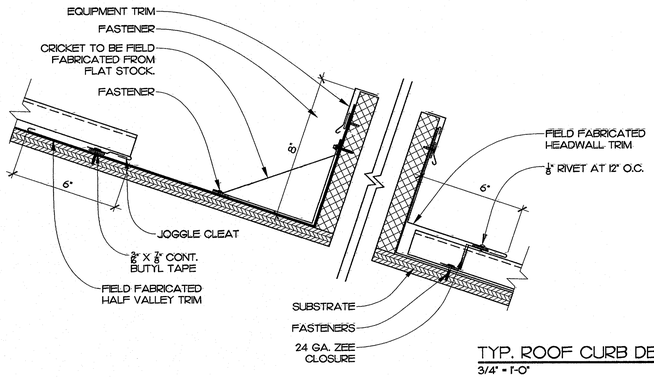

TYP. ROOF CURB DETAIL (K6)
3/4" = 1'-0"

NOTES:
1) PENETRATIONS SHOULD BE CENTERED IN PANELS IF AT ALL POSSIBLE.
2) SUBSTRATE MUST BE CUT OUT ENOUGH SO THAT ROOF JACK IS ONLY ATTACHED TO ROOF PANEL.

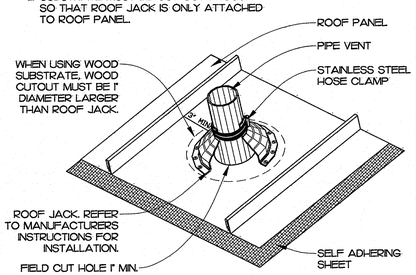

TYP. VTR DETAIL (G3)
3/4" = 1'-0"

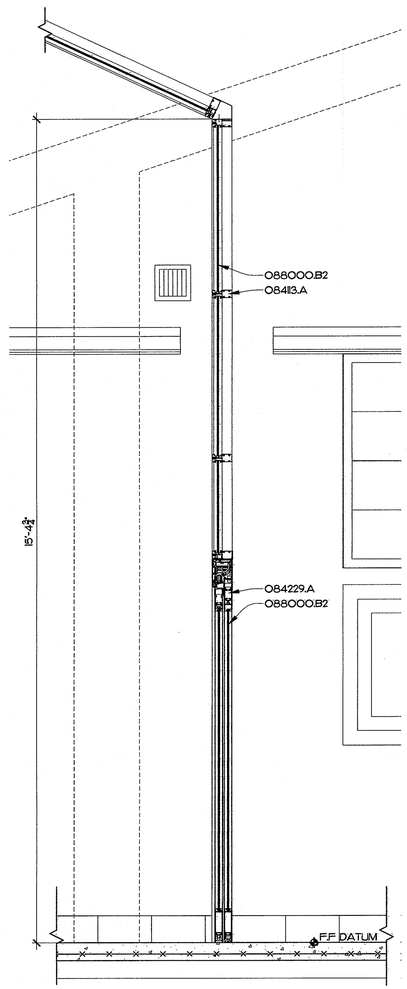

* FOR TYPICAL KEYNOTES SEE WALL SECTION A9

WALL SECTION (A6)
3/4" = 1'-0"

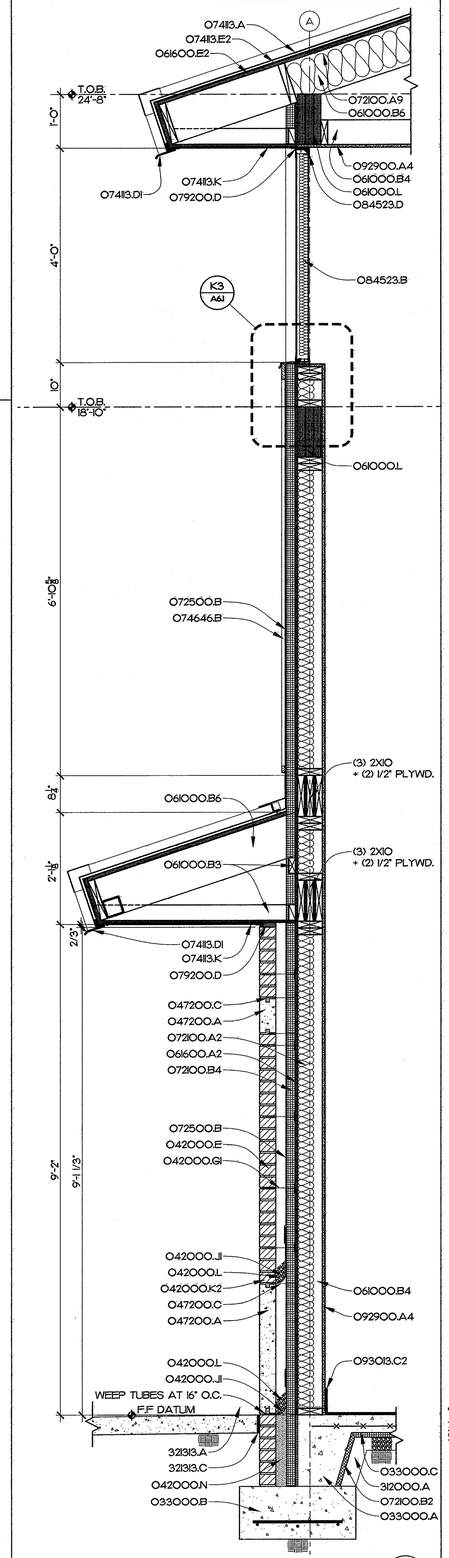

WALL SECTION (A9)
3/4" = 1'-0"

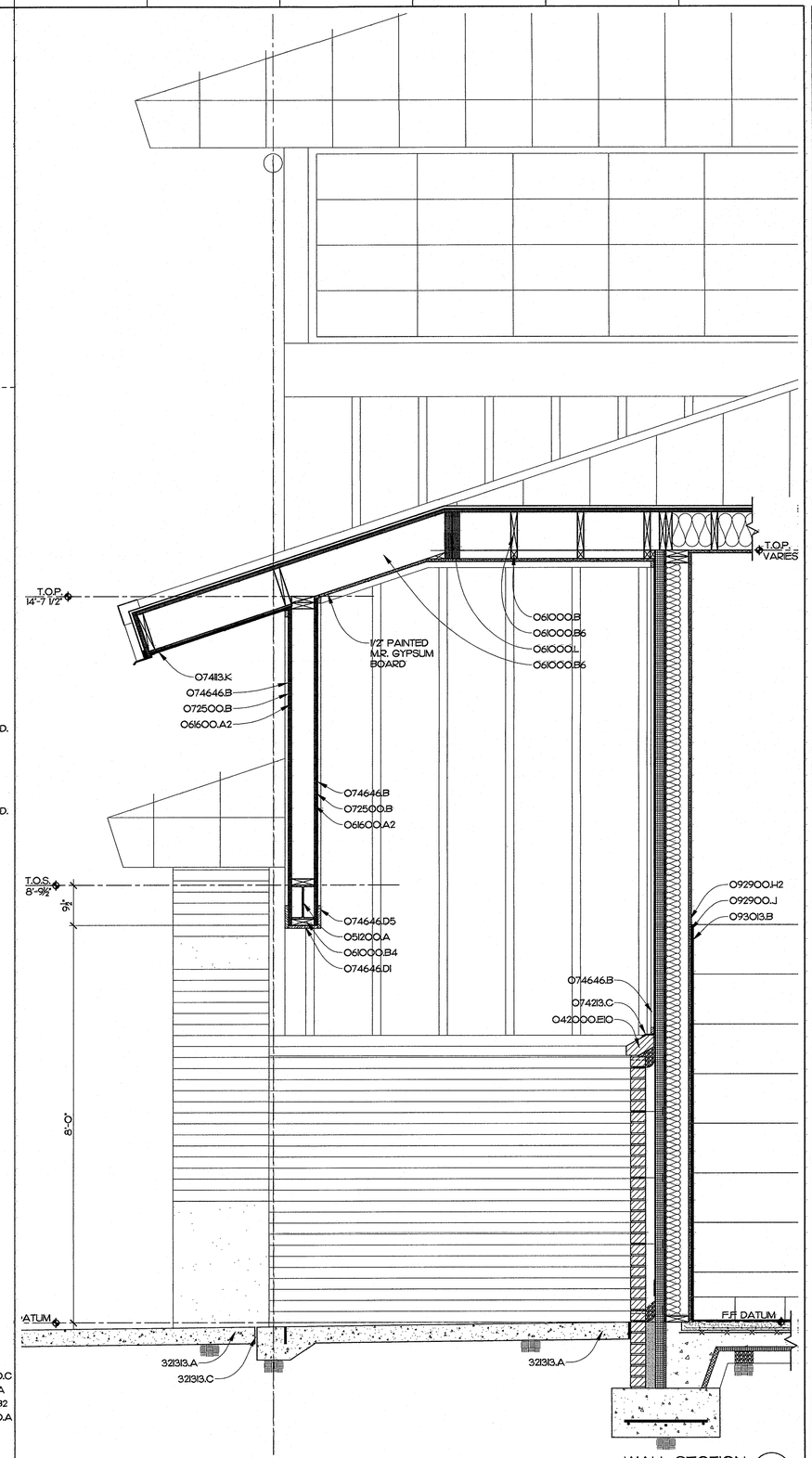

* FOR TYPICAL KEYNOTES SEE WALL SECTION A9

WALL SECTION (A15)
3/4" = 1'-0"

MATERIALS KEYING LEGEND

033000.A	-CONCRETE SLAB ON GRADE, SEE STRUCTURAL
033000.B	-CONCRETE FOOTING, SEE STRUCTURAL
033000.C	-VAPOR BARRIER
042000.E	-FACE BRICK
042000.E10	-FACE BRICK, SOLDIER COURSE SILL, SPECIAL SHAPE
042000.GI	-HORIZONTAL JOINT REINFORCING AT 16" OC VERT.
042000.JI	-THRU-WALL FABRIC FLASHING
042000.K2	-WEEP SLOTS AT 16" O.C.
042000.L	-CAVITY DRAINAGE MATERIAL
042000.N	-GROUT SOLID
047200.A	-CAST STONE MASONRY
047200.C	-CAST STONE MASONRY ANCHORS, BY MANUF.
051200.A	-STRUCTURAL STEEL, SEE STRUCTURAL DRAWINGS
061000.B	-WOOD FRAMING, 2X
061000.B3	-2X4 AT 16" O.C.
061000.B4	-2X6 AT 16" O.C.
061000.B6	-2X10 AT 16" O.C.
061000.L	-PARALLEL STRAND LUMBER - SEE STRUCTURAL
061600.A2	-PLYWOOD SHEATHING, 1/2" THICK
061600.E2	-PLYWOOD ROOF SHEATHING, 3/4" T&G
072100.A2	-R-13 BATT INSULATION
072100.A9	-R-38 BATT INSULATION
072100.B2	-1" RIGID INSULATION
072100.B4	-2" RIGID INSULATION
072500.B	-BUILDING WRAP
074113.A	-METAL ROOF, STANDING SEAM SYSTEM
074113.DI	-METAL DRIP
074113.E2	-SELF ADHERING SHEET
074113.K	-METAL SOFFIT PANEL
074646.B	-FIBER-CEMENT SIDING, BOARD AND BATTEN
074646.DI	-FIBER-CEMENT SIDING, TRIM BOARD 1X
074646.D5	-FIBER-CEMENT SIDING, TRIM BOARD 1X6
079200.D	-BACKER ROD & SEALANT
084113.A	-STOREFRONT FRAMING, THERMALLY BROKEN
084229.A	-AUTOMATIC SLIDING DOOR ASSEMBLY
084523.B	-FIBERGLASS-SANDWICH PANEL ASSEMBLY, 2-3/4" THICK
084523.D	-METAL SUB-FRAME
088000.B2	-5/8" INSULATING GLASS-LOW-E
092900.A4	-5/8" GYPSUM WALLBOARD
092900.H2	-M.R. GYPSUM BOARD, 5/8" THICK
092900.J	-CEMENTITIOUS BACKER UNIT
093013.B	-CERAMIC TILE
093013.C2	-CERAMIC TILE, SPECIAL SHAPE, BULLNOSE
312000.A	-POROUS FILL
323113.A	-CONCRETE SIDEWALK, 4" THICK
323113.C	-EXPANSION JOINT

GENERAL NOTES

KEY PLAN

PROJECT 42229.1.1 (K-5101)

NO	REVISION	DATE

SEAL
JOHN K. FARKAS REGISTERED ARCHITECT 5922 GREENVILLE, NC 3-19-2014

JKF ARCHITECTURE

P.O. BOX 20662 GREENVILLE, NC 27858 PHONE 252-355-1068

NCDOT US 70 REST AREA RENOVATIONS
NEW BERN, CRAVEN COUNTY, NC

DRAWING TITLE
WALL SECTIONS

SCALE	AS NOTED
DRAWN	DJH/MCZ
CHECKED	JKF
DATE	1-10-2014
PROJECT NO.	2013-18
DRAWING NO	A3.2

© COPYRIGHT, JKF ARCHITECTURE P.C. JOHN K. FARKAS, AIA

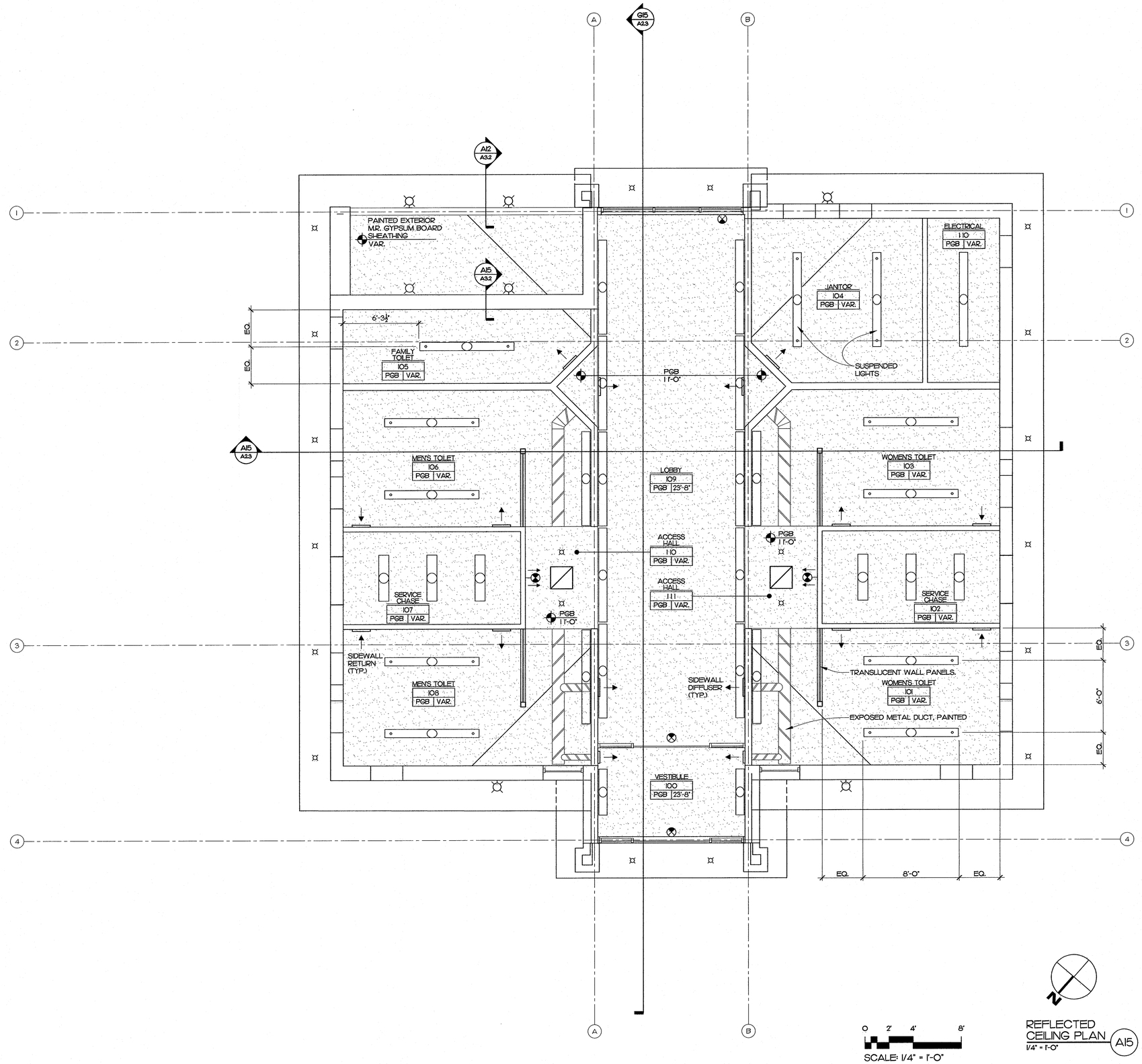

REFLECTED CEILING PLAN A15
1/4" = 1'-0"

MATERIALS KEYING LEGEND

GENERAL NOTES

KEY PLAN

PROJECT 42229.1.1 (K-5101)

NO	REVISION	DATE

SEAL

JOHN K. FARKAS REGISTERED ARCHITECT 5922 GREENVILLE, N.C. 3.19.2014

JKF ARCHITECTURE

P.O. BOX 20662 GREENVILLE, NC 27858 PHONE 252-355-1068

NCDOT US 70 REST AREA RENOVATIONS
NEW BERN, CRAVEN COUNTY, NC

DRAWING TITLE
REFLECTED CEILING PLAN

SCALE	1/4" = 1'-0"
DRAWN	MCZ/DJH
CHECKED	JKF
DATE	110-2014
PROJECT NO.	2013-18
DRAWING NO	A5.1

© COPYRIGHT, JKF ARCHITECTURE PC, JOHN K. FARKAS, AIA

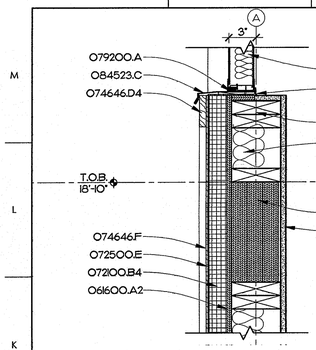

EXTERIOR DETAIL K3
1 1/2" = 1'-0"

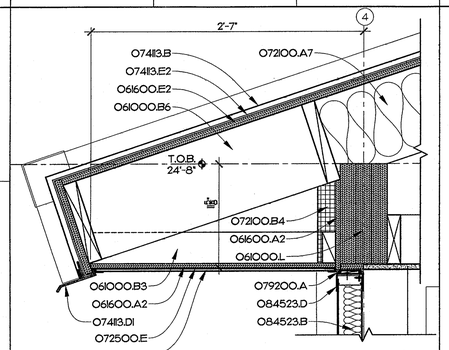

EXTERIOR DETAIL K6
1 1/2" = 1'-0"

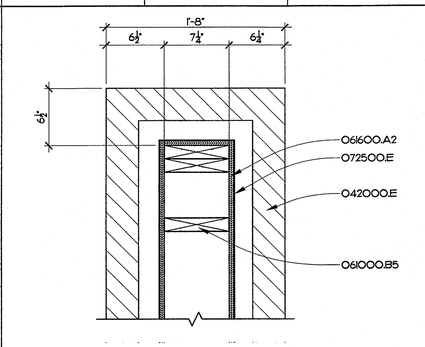

EXTERIOR PLAN DETAIL K9
1 1/2" = 1'-0"

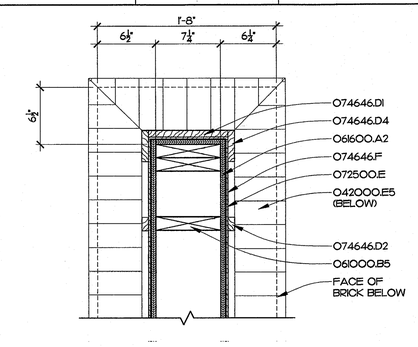

EXTERIOR PLAN DETAIL K12
1 1/2" = 1'-0"

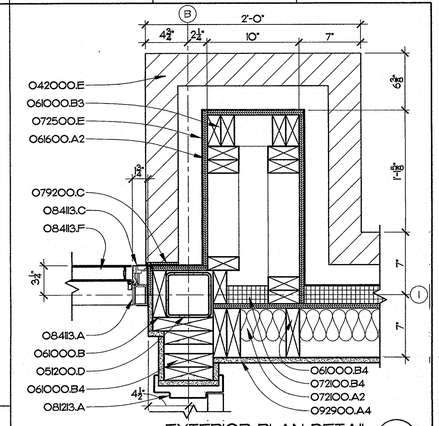

EXTERIOR PLAN DETAIL J15
1 1/2" = 1'-0"

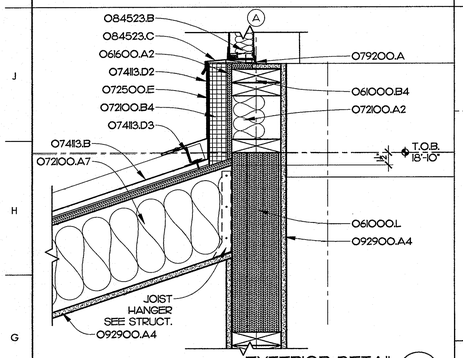

EXTERIOR DETAIL G3
1 1/2" = 1'-0"

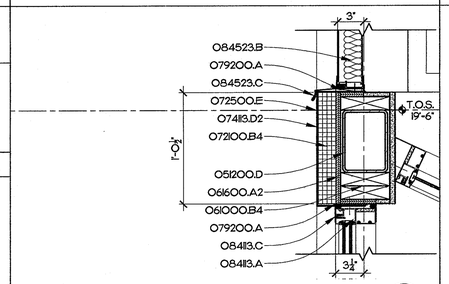

EXTERIOR DETAIL G6
1 1/2" = 1'-0"

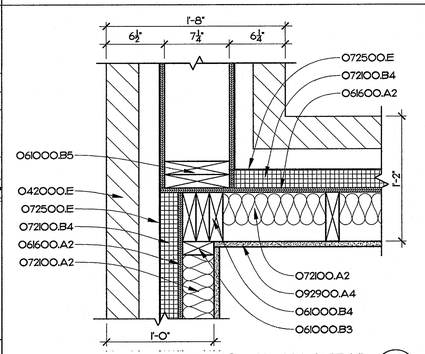

EXTERIOR PLAN DETAIL G9
1 1/2" = 1'-0"

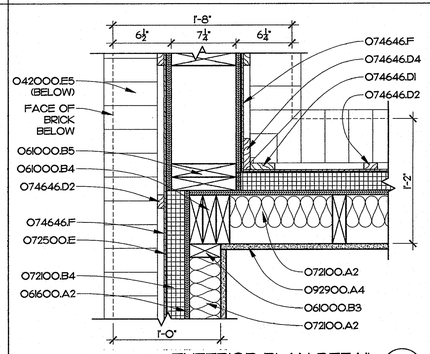

EXTERIOR PLAN DETAIL G12
1 1/2" = 1'-0"

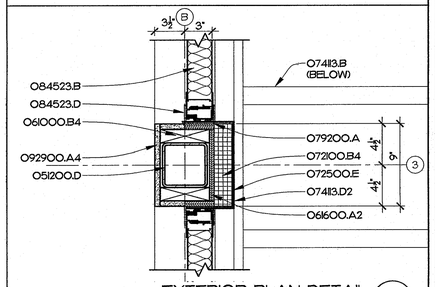

EXTERIOR PLAN DETAIL G15
1 1/2" = 1'-0"

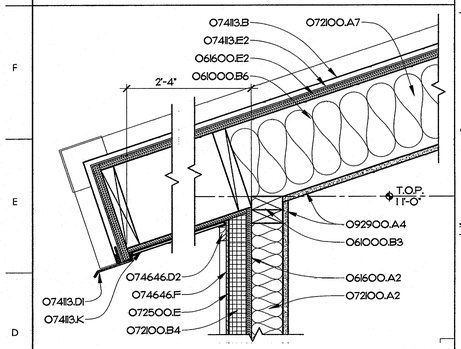

EXTERIOR DETAIL D3
1 1/2" = 1'-0"

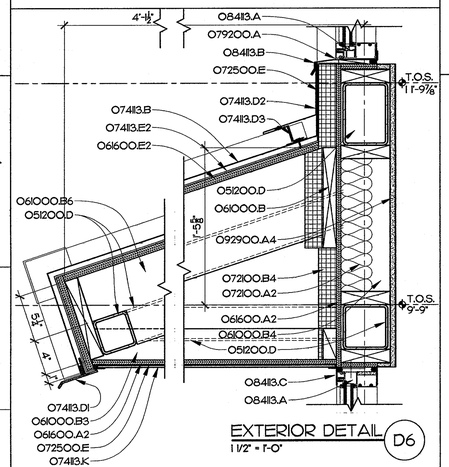

EXTERIOR DETAIL D6
1 1/2" = 1'-0"

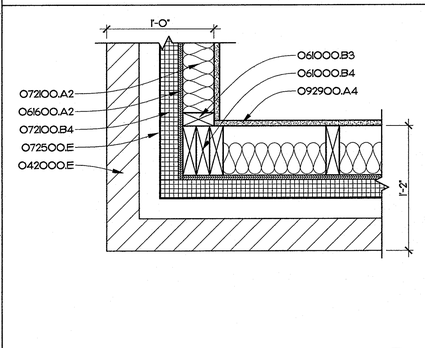

EXTERIOR PLAN DETAIL D9
1 1/2" = 1'-0"

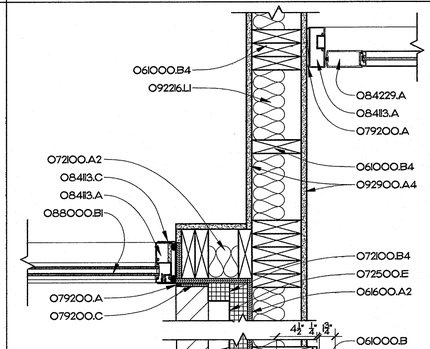

EXTERIOR PLAN DETAIL D12
1 1/2" = 1'-0"

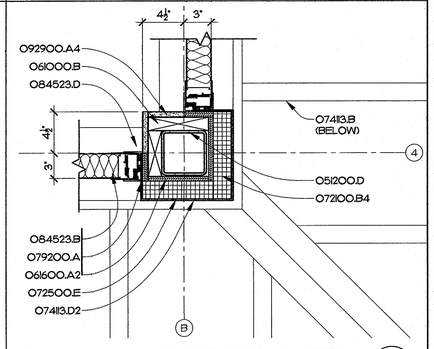

EXTERIOR PLAN DETAIL D15
1 1/2" = 1'-0"

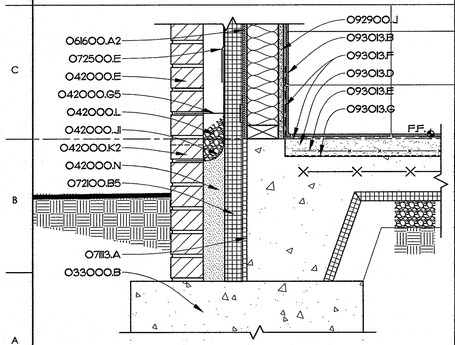

EXTERIOR DETAIL A3
1 1/2" = 1'-0"

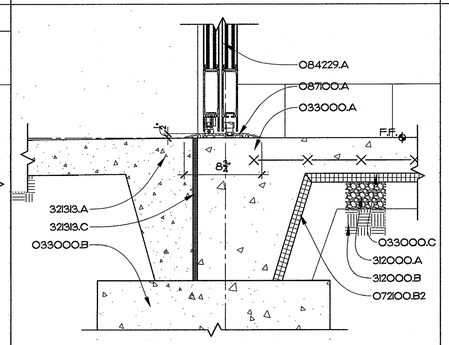

EXTERIOR DETAIL A6
1 1/2" = 1'-0"

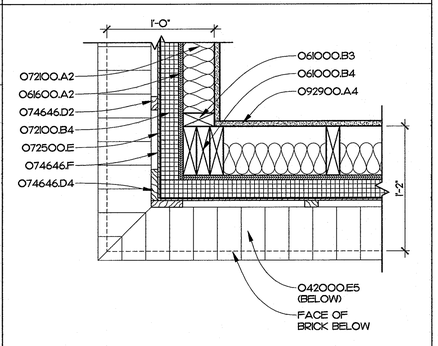

EXTERIOR PLAN DETAIL A9
1 1/2" = 1'-0"

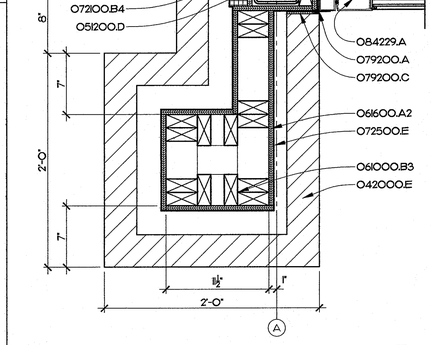

EXTERIOR PLAN DETAIL A12
1 1/2" = 1'-0"

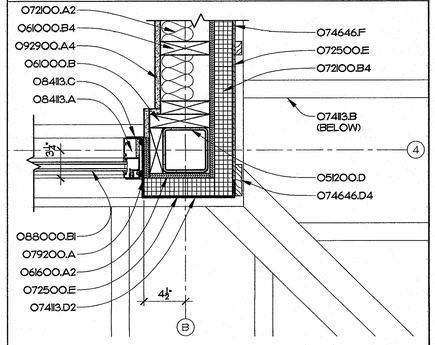

EXTERIOR PLAN DETAIL A15
1 1/2" = 1'-0"

MATERIALS KEYING LEGEND

033000.A	- CONCRETE SLAB ON GRADE, SEE STRUCTURAL
033000.B	- CONCRETE FOOTING, SEE STRUCTURAL
033000.C	- VAPOR BARRIER
042000.E	- FACE BRICK
042000.E5	- FACE BRICK, ROWLOCK SILL
042000.G5	- ADJUSTABLE MASONRY ANCHOR AT 16" OC VERT. & 24" OC HORIZ.
042000.JI	- THRU-WALL FABRIC FLASHING
042000.K2	- WEEP SLOTS AT 16" O.C.
042000.L	- CAVITY DRAINAGE MATERIAL
042000.N	- GROUT SOLID
051200.D	- TUBE STEEL, SEE STRUCTURAL
061000.B	- WOOD FRAMING, 2X
061000.B3	- 2X4 AT 16" O.C.
061000.B4	- 2X6 AT 16" O.C.
061000.B5	- 2X8 AT 16" O.C.
061000.B6	- 2X10 AT 16" O.C.
061000.L	- PARALLEL STRAND LUMBER - SEE STRUCTURAL
061600.A2	- PLYWOOD SHEATHING, 1/2" THICK
061600.E2	- PLYWOOD ROOF SHEATHING, 3/4" T&G
062023.E	- INTERIOR WOOD TRIM, 1/2" TRIM BOARD OPAQUE FINISH
07113.A	- BITUMINOUS DAMPROOFING
072100.A2	- R-13 BATT INSULATION
072100.A7	- R-25 BATT INSULATION
072100.B2	- 1" RIGID INSULATION
072100.B4	- 2" RIGID INSULATION
072100.B5	- 2-1/2" RIGID INSULATION
072500.E	- BUILDING WRAP
074113.B	- METAL ROOF, STANDING SEAM
074113.DI	- METAL DRIP
074113.D2	- METAL TRIM
074113.D3	- Z-CLOSURE TRIM W/SEALS
074113.E2	- SELF ADHERING SHEET
074113.K	- METAL SOFFIT PANEL
074646.DI	- FIBER-CEMENT SIDING, TRIM BOARD 1X
074646.D2	- FIBER-CEMENT SIDING, TRIM BOARD 1X2
074646.D4	- FIBER-CEMENT SIDING, TRIM BOARD 1X4
074646.F	- FIBER-CEMENT SIDING, SHEATHING 5/16"
079200.A	- SEALANT
079200.C	- COMPRESSIBLE SEALER W/ADHESIVE
08213.A	- HOLLOW METAL FRAME
084113.A	- STOREFRONT FRAMING, THERMALLY BROKEN
084113.B	- METAL SILL PAN
084113.C	- METAL SUB-FRAME
084113.F	- ALUMINUM STILE & RAIL DOOR
084229.A	- AUTOMATIC SLIDING DOOR ASSEMBLY
084523.B	- FIBERGLASS-SANDWICH PANEL ASSEMBLY, 2-3/4" THICK
084523.C	- METAL SILL PAN
084523.D	- METAL SUB-FRAME
087100.A	- THERMAL BREAK THRESHOLD
088000.BI	- 1" INSULATING GLASS-LOW E
092216.LI	- ACOUSTICAL BLANKET, 3" THICK
092900.A4	- 5/8" GYPSUM WALLBOARD
092900.J	- CEMENTITIOUS BACKER UNIT
093013.B	- CERAMIC TILE
093013.D	- MORTAR BED
093013.E	- REINFORCING MESH
093013.F	- WATERPROOFING MEMBRANE
093013.G	- CLEVAGE MEMBRANE
312000.A	- POROUS FILL
312000.B	- COMPACTED FILL
321313.A	- CONCRETE SIDEWALK, 4" THICK
321313.C	- EXPANSION JOINT

GENERAL NOTES

KEY PLAN

PROJECT 42229.1.1 (K-5101)

NO	REVISION	DATE

SEAL

JOHN K. FARKAS
REGISTERED ARCHITECT
3.19.2014
5922
GREENVILLE

JKF ARCHITECTURE

P.O. BOX 20662 GREENVILLE, NC 27858 PHONE 252-355-1068

NCDOT US 70 REST AREA RENOVATIONS
NEW BERN, CRAVEN COUNTY, NC

DRAWING TITLE
EXTERIOR DETAILS

SCALE	1 1/2" = 1'-0"
DRAWN	DJH
CHECKED	JKF
DATE	HO-2014
PROJECT NO.	2013-18
DRAWING NO	A6.1

© COPYRIGHT, JKF ARCHITECTURE P.C., JOHN K. FARKAS, AIA

WINDOW SCHEDULE

WINDOW GROUP NO.	WINDOW UNIT SIZE (W X H)	WINDOW TYPE	MATERIAL	FINISH	FRAME ELEVATION	UNIT THICKNESS	DETAILS J	DETAILS H	DETAILS S	GLASS	FIRE RATING (HRS)	REMARKS
W1	2'-7 1/2" X 2'-7 1/2"	FIXED	AL	AN	W1	2 7/16"	A11	F11	F11	1" LOW-E OBSCURE	-	BASIS FOR DESIGN EFCO #510
W2	3'-6" X 9'-2"	ALUMINUM STORE FRONT	AL	AN	W2	4"	A12/A6J	A6	SIM. TO A9	1" LOW-E OBSCURE	-	- -
W3	11'-10 3/4" X 6'-10"	ALUMINUM STORE FRONT	AL	AN	W3	4"	A15/A6J	G6/A6J	D6/A6J	1" LOW-E TINTED	-	- -
W4	11'-10 1/2" X 4'-0"	TRANSLUCENT WALL PANEL	AL	AN	W4	2-3/4"	D15/A6J	K6/A6J	G6/A6J	2 3/4" TRANSL INSUL PANEL	-	- -
W5	10'-4" X 4'-0"	TRANSLUCENT WALL PANEL	AL	AN	W5	2 3/4"	SIM. TO D15/A6J	A12/A6J	G3/A3.2	2 3/4" TRANSL INSUL PANEL	-	- -
W6	12'-1 1/2" X 4'-0"	TRANSLUCENT WALL PANEL	AL	AN	W6	2 3/4"	G15/A6J	A12/A3J	G3/A6J	2 3/4" TRANSL INSUL PANEL	-	- -
W7	15'-4" X 4'-0"	TRANSLUCENT WALL PANEL	AL	AN	W7	2 3/4"	D15/A6J	A12/A3J	G3/A6J	2 3/4" TRANSL INSUL PANEL	-	- -

WINDOW/FRAME TYPES

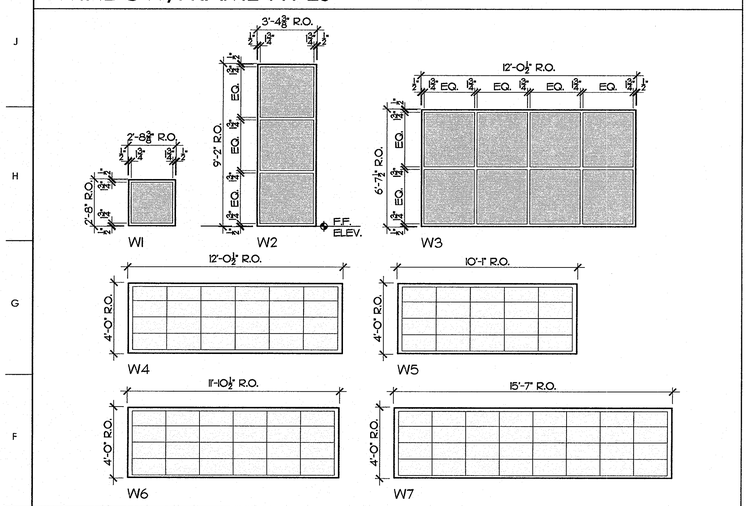

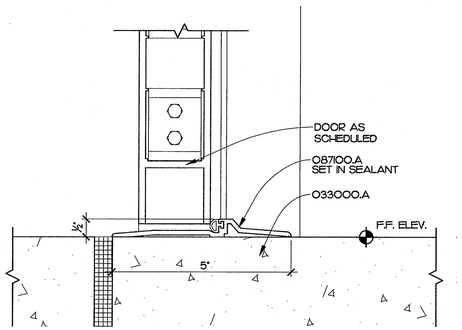

THRESHOLD DETAIL (K9)
6" = 1'-0"

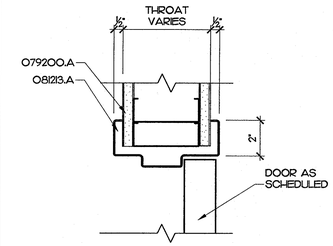

TYP. METAL STUD HEAD / JAMB DETAIL (K11)
3" = 1'-0"

DOOR SCHEDULE

DOOR GROUP NO.	DOOR OPENING SIZE (W X H)	DOOR TYPE	DOOR THICKNESS (1-3/4" U.N.O.)	DOOR MATERIAL	DOOR FINISH	FRAME ELEVATION	FRAME MATERIAL	FRAME FINISH	DETAILS J	DETAILS H	DETAILS S	GLASS	FIRE RATING (HRS)	REMARKS
1	6'-0" X 7'-0"	AA	1 3/4"	CLR. AN	AN	F2	AL	CLR. AN	A12/A6J	A3/A6/A3J	A3/A6/A3J	1" LOW-E	-	-
2	6'-0" X 7'-0"	AA	1 3/4"	CLR. AN	AN	F4	AL	CLR. AN	A12/A6J	A6/A3.2	A6/A3.2	5/8" LOW-E	-	-
3	3'-0" X 7'-0"	B	1 3/4"	CLR. AN	AN	F3	AL	CLR. AN	SIM. TO A12/A6J	A6/A3.2	A6/A3.2	1" LOW-E	-	-
4	3'-0" X 7'-0"	C	1 3/4"	SCW	TF	F1	HM	P	K11	K11	-	-	-	-
5	3'-0" X 7'-0"	D	1 3/4"	SCW	TF	F1	HM	P	K11	K11	-	1/4" OBSCURE TEMP.	-	-

DOOR TYPES

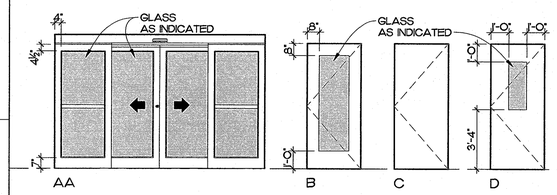

FRAME TYPES

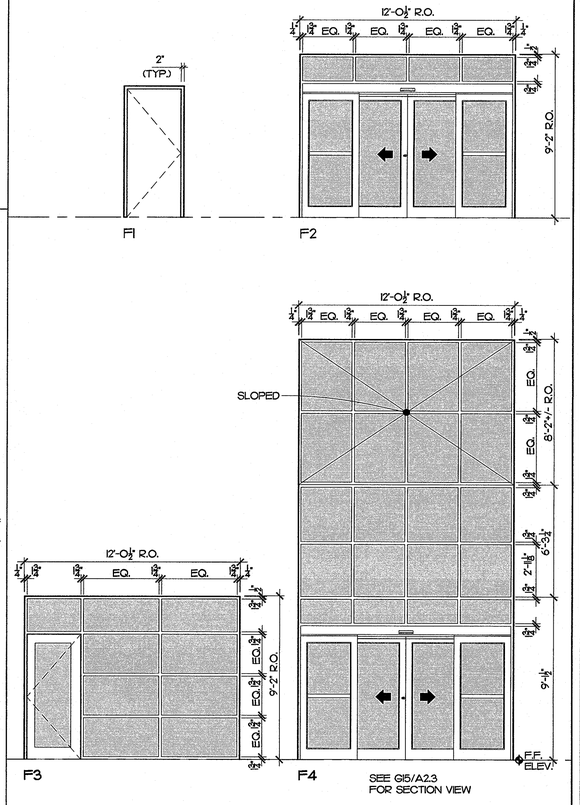

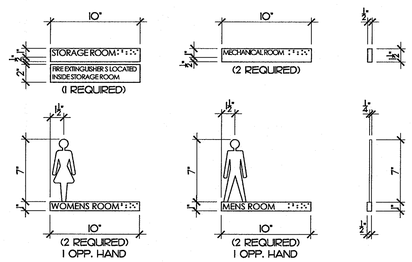

SIGNAGE DETAIL (F9)
1 1/2" = 1'-0"

*SIGNAGE SHALL COMPLY WITH ANSI A117.2003

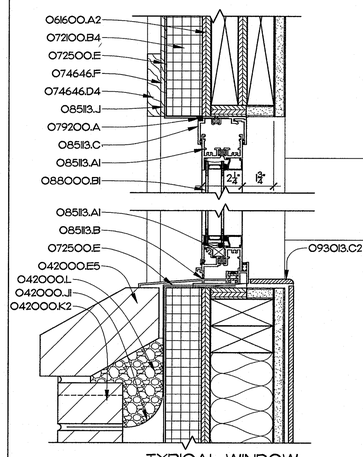

TYPICAL WINDOW HEAD/SILL DETAIL (F11)
3" = 1'-0"

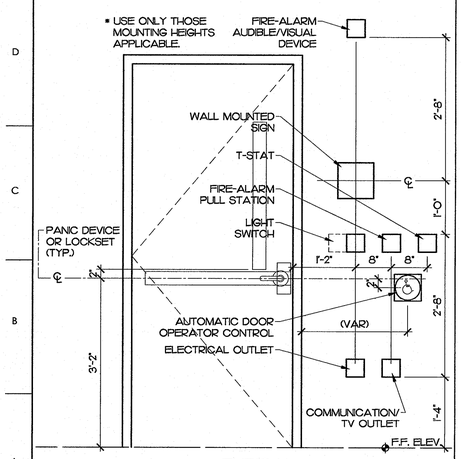

TYPICAL MOUNTING HEIGHTS (A3)
3/4" = 1'-0"

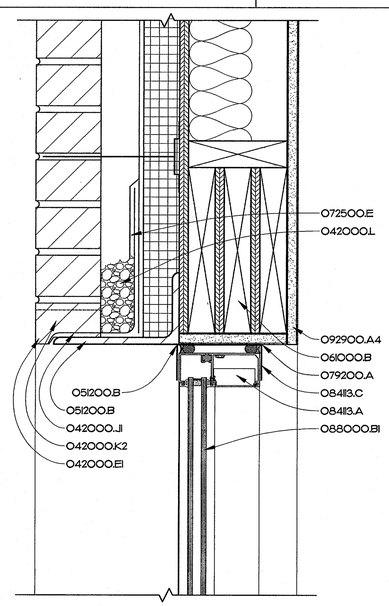

STOREFRONT HEAD DETAIL (A6)
3" = 1'-0"

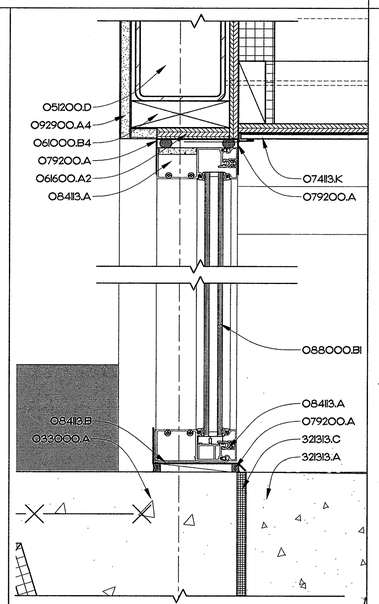

STOREFRONT HEAD/SILL DETAIL (A9)
3" = 1'-0"

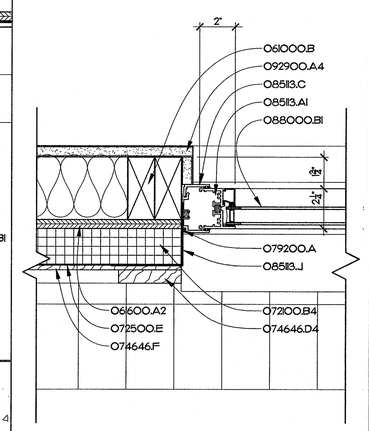

TYPICAL WINDOW JAMB DETAIL (A11)
3" = 1'-0"

MATERIALS KEYING LEGEND

033000.A	- CONCRETE SLAB ON GRADE, SEE STRUCTURAL
042000.E1	- FACE BRICK, SHELF BRICK
042000.E5	- FACE BRICK, ROWLOCK SILL
042000.J1	- THRU-WALL FABRIC FLASHING
042000.K2	- WEEP SLOTS AT 16" O.C.
042000.L	- CAVITY DRAINAGE MATERIAL
051200.B	- STEEL ANGLE, SIZE AS INDICATED
051200.D	- TUBE STEEL, SIZE AS INDICATED
061000.B	- WOOD FRAMING, 2X
061000.B4	- 2X6
061600.A2	- PLYWOOD SHEATHING, 1/2" THICK
072100.B4	- 2" RIGID INSULATION
072500.E	- BUILDING WRAP
074113.K	- METAL SOFFIT PANEL
074646.D4	- FIBER-CEMENT SIDING, TRIM BOARD 1X4
074646.F	- FIBER-CEMENT SIDING, SHEATHING 5/16"
079200.A	- SEALANT
081213.A	- HOLLOW METAL FRAME
084113.A	- STOREFRONT FRAMING, THERMALLY BROKEN
084113.B	- METAL SILL PAN
084113.C	- METAL SUB-FRAME
085113.A1	- ALUMINUM WINDOW ASSEMBLY, FIXED WINDOW
085113.B	- METAL SILL PAN
085113.C	- METAL SUB FRAME
085113.J	- ALUMINUM WINDOW PAN
087100.A	- THERMAL BREAK THRESHOLD
088000.B1	- 1" INSULATING GLASS-LOW E
092900.A4	- 5/8" GYPSUM WALLBOARD
093013.B	- CERAMIC TILE
093013.C2	- CERAMIC TILE, BULLNOSE SILL
321313.A	- CONCRETE SIDEWALK, 4" THICK
321313.C	- EXPANSION JOINT

GENERAL NOTES

KEY PLAN

PROJECT 42229.1.1 (K-5101)

NO	REVISION	DATE

SEAL: JOHN K. FARKAS REGISTERED ARCHITECT 5922 GREENVILLE 3-17-2014

JKF ARCHITECTURE
P.O. BOX 20662 GREENVILLE, NC 27858 PHONE 252-355-1068

NCDOT US 70 REST AREA RENOVATIONS
NEW BERN, CRAVEN COUNTY, NC

DRAWING TITLE: DOOR, WINDOW SCHEDULE & DETAILS

SCALE	AS NOTED
DRAWN	DJH/MCZ
CHECKED	JKF
DATE	1-10-2014
PROJECT NO.	2013-18
DRAWING NO	A8.1

© COPYRIGHT, JKF ARCHITECTURE P.C. JOHN K. FARKAS, AIA

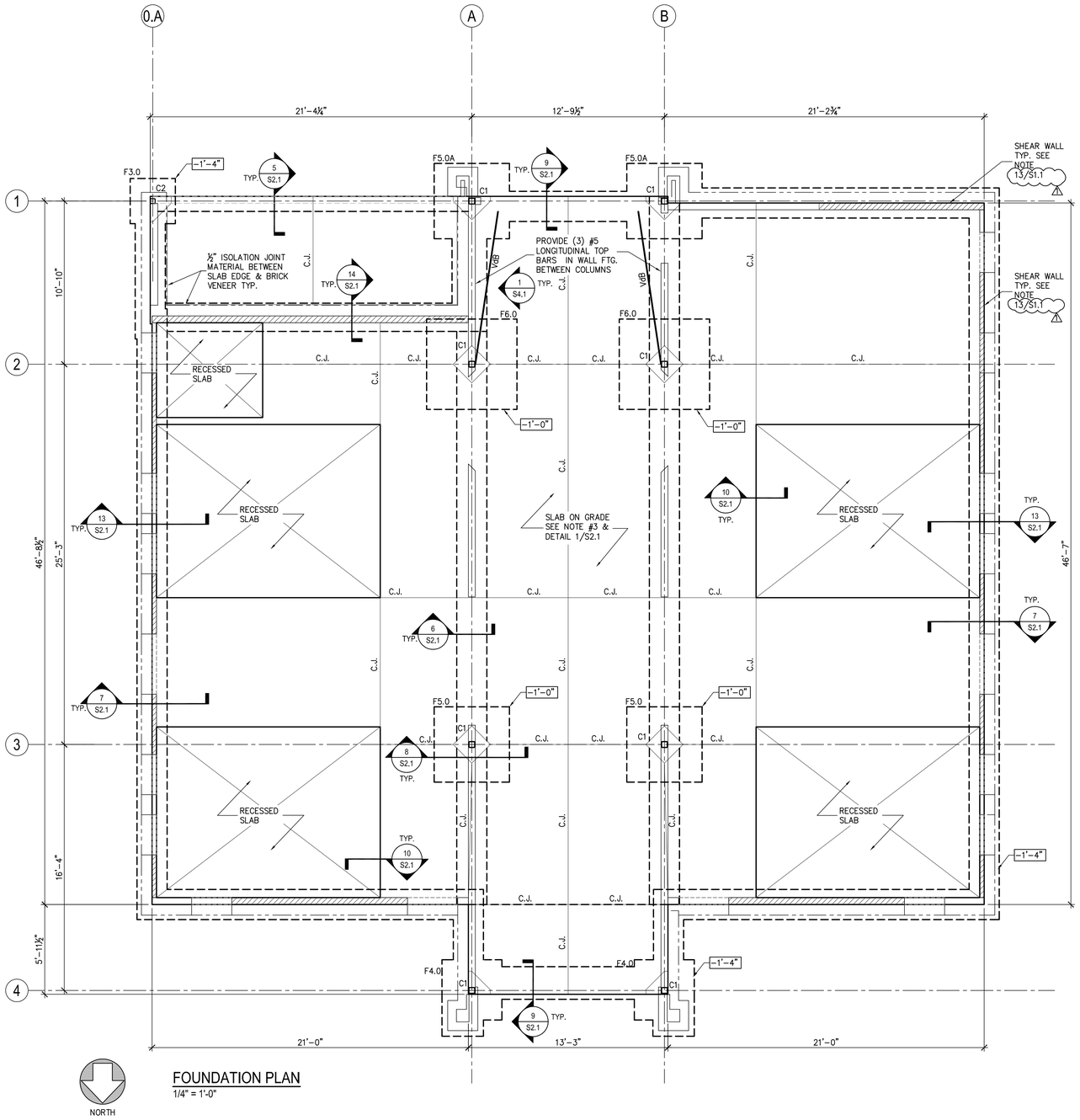

FOUNDATION PLAN

1/4" = 1'-0"

FOOTING SCHEDULE			
MARK	FTG. SIZE	REINFORCEMENT	REMARKS
F3.0	3'-0" x 3'-0" x 1'-0"	(4) #5 EA. WAY, BOTT.	–
F4.0	4'-0" x 4'-0" x 1'-0"	(5) #5 EA. WAY, BOTT.	–
F5.0	5'-0" x 5'-0" x 1'-0"	(6) #5 EA. WAY, BOTT.	–
F5.0A	5'-0" x 5'-0" x 1'-0"	(6) #5 EA. WAY, TOP & BOTT.	–
F6.0	6'-0"x6'-0"x1'-6"	(7) #5 EA. WAY, TOP & BOTT.	–

COLUMN SCHEDULE				
MARK	COL. SIZE	BASE PL SIZE	ANCH. BOLT DIA.	REMARKS
C1	HSS 5 x 5 x ¼	¾" x 11" x 0'-11"	¾"	4 BOLTS
C2	HSS 4 x 4 x ¼	¾" x 10" x 0'-10"	¾"	4 BOLTS

FOUNDATION PLAN NOTES:

1. SEE SHEET S4.1 FOR DESIGN CRITERIA, GENERAL STRUCTURAL NOTES & SCHEDULES.
2. TOP OF SLAB REFERENCE ELEVATION = 0'-0" UNLESS OTHERWISE NOTED. SEE ARCHITECTURAL AND CIVIL DRAWINGS FOR ACTUAL SITE ELEVATIONS.
3. CONCRETE FLOOR SLAB IS 4" THICK WITH 6 x 6 – W 2.1 x W 2.1 WELDED WIRE FABRIC, PROVIDE 10 MIL VAPOR BARRIER AND 4" COMPACTED GRANULAR BASE UNDER SLAB. SEE DETAIL 1/S2.1
4. ALL INTERIOR WALL FOOTINGS SHALL BE 2'-0" WIDE UNLESS OTHERWISE NOTED ON THE PLAN.
5. ALL EXTERIOR WALL FOOTINGS SHALL BE 2'-0" WIDE UNLESS OTHERWISE NOTED ON THE PLAN.
6. SEE DETAIL 11/S2.1 FOR TYPICAL FOOTING STEP.
7. THE TOP OF ALL EXTERIOR WALL FOOTINGS SHALL BE AT ELEVATION -1'-4" UNLESS OTHERWISE NOTED ON THE PLAN.
8. SEE ARCHITECTURAL DRAWINGS FOR LOCATIONS OF MASONRY CONTROL JOINTS.
9. SEE ARCHITECTURAL AND MECHANICAL DRAWINGS FOR MASONRY OPENINGS NOT SHOWN.
10. FOR FOOTING, BASE PLATE AND ANCHOR BOLT DETAIL, SEE SHEET S2.1.
11. FOR SLAB CORNER REINFORCEMENT SEE DETAIL 4/S2.1
12. SEE ARCHITECTURAL DWGS FOR DEPRESSED SLAB LOCATIONS & DIMENSIONS. DETAIL SEE 10/S2.1.
13. PROVIDE SIMPSON 'HDQ8-SDS3' HOLD DOWN w/3 STUDS AT EACH END OF SHEAR WALL. ATTACH WALL SHEATHING PER NOTE 5.6 ON DRAWING S4.1

FOUNDATION PLAN LEGEND	
F4.0	CONCRETE FOOTING WITH FOOTING MARK – SEE FOOTING SCHEDULE ON THIS SHEET FOR SIZE AND REINFORCING
C3	STEEL COLUMN WITH COLUMN MARK AND ISOLATION JOINT – SEE COLUMN SCHEDULE ON THIS SHEET FOR COLUMN SIZE, BASE PLATE SIZE AND QUANTITY, AND SIZE OF ANCHOR BOLTS. SEE DETAIL 12/S2.1 FOR ADDITIONAL INFORMATION
-S-	FOOTING STEP – SEE DETAIL 11/S2.1 FOR ADDITIONAL INFORMATION
C.J.	SLAB ON GRADE CONSTRUCTION OR SAWCUT CONTROL JOINT – SEE DETAILS 2/S2.1 AND 3/S2.1 FOR ADDITIONAL INFORMATION
-2'-0"	DENOTES TOP OF FOOTING ELEVATION
VdB	BRACING SEE DETAILS IN 1/S4.1
	SHEAR WALL SEE NOTE 13/S1.1
U.O.N.	DENOTES 'UNLESS OTHERWISE NOTED'

MATERIALS KEYING LEGEND

RPA ENGINEERING, P.A.
Structural Engineering Solutions
Engineering License Certificate No. C-2734
102 Regency Blvd. Suite A1 Greenville, NC 27834
Phone : 252-321-6027
Fax : 252-355-2179
RPA Project No.: 2013103

GENERAL NOTES

KEY PLAN

NO	REVISION	DATE
1.	REVISE FOR RE-BID	07-28-2014

SEAL

NORTH CAROLINA PROFESSIONAL SEAL 17348 ENGINEER STATE OF NORTH CAROLINA

7/28/14

JKF ARCHITECTURE
P.O. BOX 20662, GREENVILLE, NC 27858, PHONE 252 • 355 • 1068

NC DOT US 70 REST AREA RENOVATIONS
NEW BERN, CRAVEN COUNTY, NC

DRAWING TITLE: FOUNDATION PLAN

SCALE: AS NOTED
DRAWN: GBP
CHECKED: MSR
DATE: 04-07-2014
PROJECT NO.: 2013-18
DRAWING NO.: S1.1

© COPYRIGHT. JKF ARCHITECTURE PC. JOHN K. FARKAS, AIA

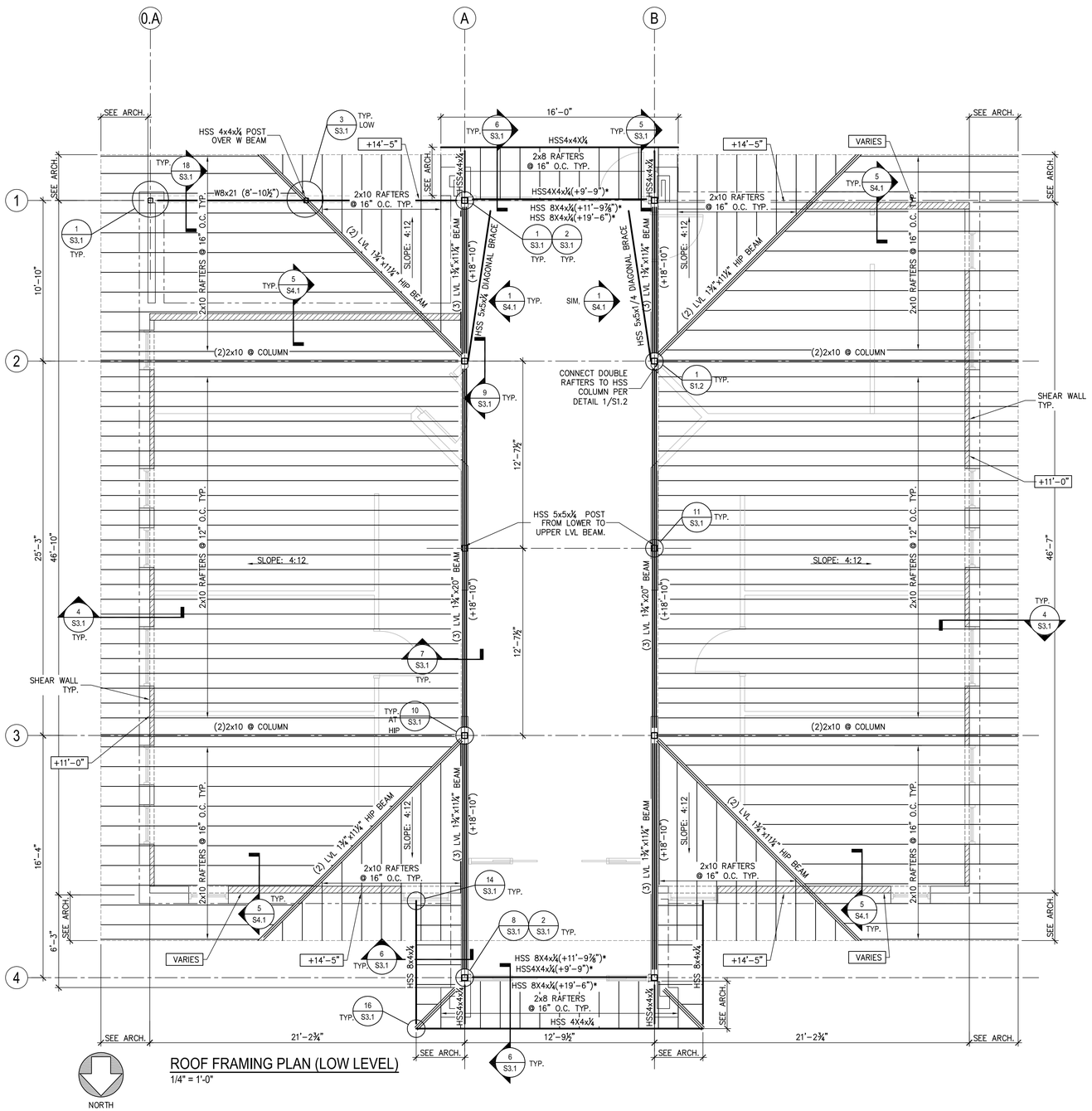

ROOF FRAMING PLAN (LOW LEVEL)

1/4" = 1'-0"

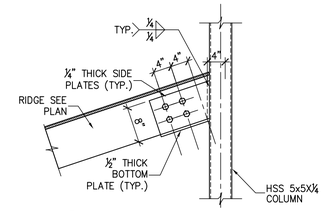

1/S1.2 DBL RAFTER TO HSS COLUMN CONN.

3/4" = 1'-0"

ROOF FRAMING PLAN NOTES:

1. SEE SHEET S4.1 FOR DESIGN CRITERIA, GENERAL STRUCTURAL NOTES AND SCHEDULES.
2. USE STEEL ANGLE LINTELS FOR ALL BRICK OPENINGS UNLESS OTHERWISE NOTED, EXCEPT AT STEEL LINTEL BEAM LOCATIONS. SEE SHEET S4.1 FOR ANGLE LINTEL SCHEDULE.
3. COORDINATE ROOF OPENINGS WITH MECHANICAL AND PLUMBING DRAWINGS.
4. TOP OF BEAM ELEVATIONS ARE REFERENCED FROM FINISHED FLOOR REFERENCE ELEVATION 0'-0". SEE ARCHITECTURAL DRAWINGS FOR ACTUAL FINISHED FLOOR ELEVATION.
5. * => DENOTES PROVIDE ⅝"ø SHEAR STUDS @ 32" O.C. TO HSS BEAM TO CARRY 2x6 PLATE.

ROOF FRAMING PLAN LEGEND	
X'-X"	RAFTER BEARING ELEVATION
W X x XX / (+X'-X")	BEAM WITH SIZE AND TOP OF BEAM REFERENCE ELEVATION
U.N.O.	DENOTES 'UNLESS NOTED OTHERWISE'
	SHEAR WALL (SEE NOTE 13/S1.1.)

MATERIALS KEYING LEGEND

RPA ENGINEERING, P.A.
Structural Engineering Solutions
Engineering License Certificate No. C-2734
102 Regency Blvd. Suite A1 Greenville, NC 27834
Phone : 252-321-6027
Fax : 252-355-2179
RPA Project No.: 2013103

GENERAL NOTES

KEY PLAN

NO	REVISION	DATE
1.	REVISE FOR RE-BID	07-28-2014

SEAL: NORTH CAROLINA PROFESSIONAL SEAL 17348 ENGINEER MARK STEVENS 7/28/14

JKF ARCHITECTURE
P.O. BOX 20662, GREENVILLE, NC 27858, PHONE 252 • 355 • 1068

NC DOT US 70 REST AREA RENOVATIONS
NEW BERN, CRAVEN COUNTY, NC

DRAWING TITLE: LOWER ROOF FRAMING PLAN

SCALE	AS NOTED
DRAWN	GBP
CHECKED	MSR
DATE	04-07-2014
PROJECT NO.	2013-18
DRAWING NO.	S1.2

© COPYRIGHT, JKF ARCHITECTURE P.C. JOHN K. FARKAS, AIA

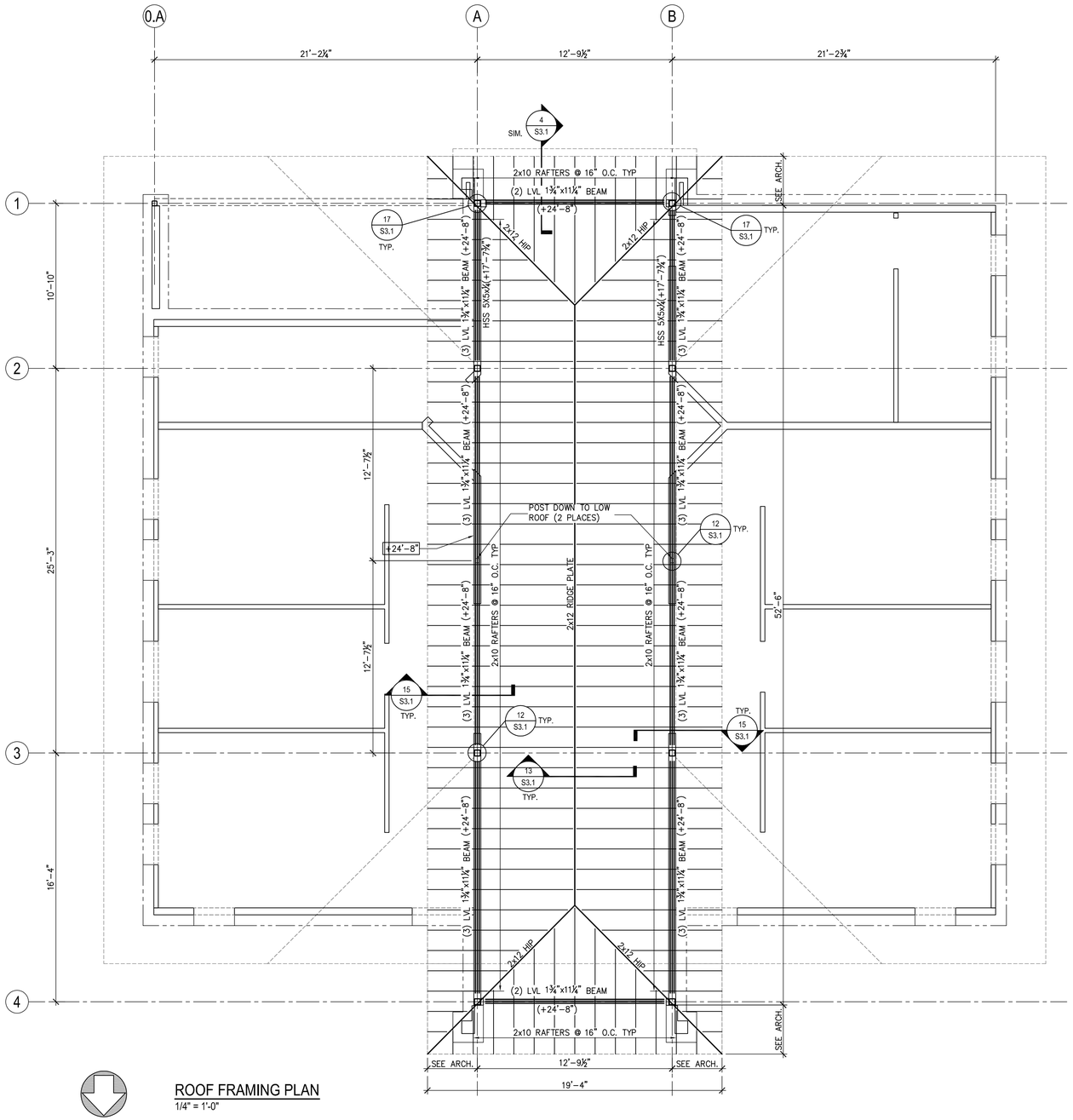

NORTH

ROOF FRAMING PLAN

1/4" = 1'-0"

ROOF FRAMING PLAN NOTES:

1. SEE SHEET S4.1 FOR DESIGN CRITERIA, GENERAL STRUCTURAL NOTES AND SCHEDULES.
2. USE STEEL ANGLE LINTELS FOR ALL BRICK OPENINGS UNLESS OTHERWISE NOTED, EXCEPT AT STEEL LINTEL BEAM LOCATIONS. SEE SHEET S4.1 FOR ANGLE LINTEL SCHEDULE.
3. COORDINATE ROOF OPENINGS WITH MECHANICAL AND PLUMBING DRAWINGS.
4. TOP OF BEAM ELEVATIONS ARE REFERENCED FROM FINISHED FLOOR REFERENCE ELEVATION 0'-0". SEE ARCHITECTURAL DRAWINGS FOR ACTUAL FINISHED FLOOR ELEVATION.

ROOF FRAMING PLAN LEGEND	
X'-X"	RAFTER BEARING ELEVATION
W X x XX / (+X'-X")	LVL BEAM WITH SIZE AND TOP OF BEAM REFERENCE ELEVATION
U.N.O.	DENOTES 'UNLESS NOTED OTHERWISE'

MATERIALS KEYING LEGEND

RPA ENGINEERING, P.A.
Structural Engineering Solutions
Engineering License Certificate No. C-2734
102 Regency Blvd. Suite A1 Greenville, NC 27834
Phone : 252-321-6027
Fax : 252-355-2179
RPA Project No.: 2013103

GENERAL NOTES

KEY PLAN

NO	REVISION	DATE

SEAL

NORTH CAROLINA PROFESSIONAL SEAL 17348 ENGINEER MARK STATEN ROGERS 4/28/14

JKF ARCHITECTURE
P.O. BOX 20662, GREENVILLE, NC 27858, PHONE 252 • 355 • 1068

NC DOT US 70 REST AREA RENOVATIONS
NEW BERN, CRAVEN COUNTY, NC

DRAWING TITLE
UPPER ROOF FRAMING PLAN

SCALE	AS NOTED
DRAWN	GBP
CHECKED	MSR
DATE	04-07-2014
PROJECT NO.	2013-18
DRAWING NO.	S1.3

© COPYRIGHT, JKF ARCHITECTURE PC, JOHN K. FARKAS, AIA

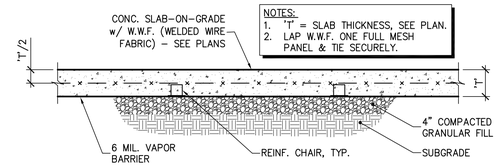

NOTES:
1. 'T' = SLAB THICKNESS, SEE PLAN.
2. LAP W.W.F. ONE FULL MESH PANEL & TIE SECURELY.

1 / S2.1 SECTION - TYP. SLAB ON GRADE
3/4" = 1'-0"

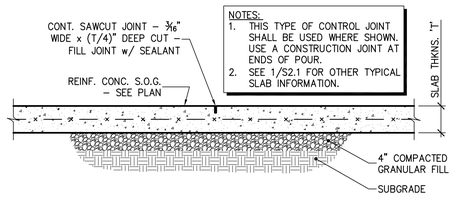

NOTES:
1. THIS TYPE OF CONTROL JOINT SHALL BE USED WHERE SHOWN. USE A CONSTRUCTION JOINT AT ENDS OF POUR.
2. SEE 1/S2.1 FOR OTHER TYPICAL SLAB INFORMATION.

2 / S2.1 SECTION - TYP. CONTROL JOINT
3/4" = 1'-0"

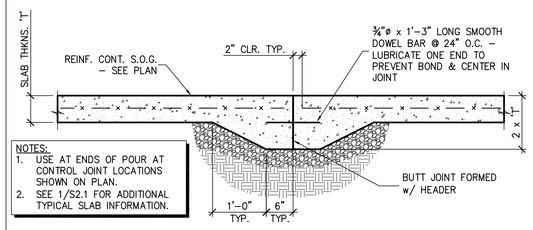

NOTES:
1. USE AT ENDS OF POUR AT CONTROL JOINT LOCATIONS SHOWN ON PLAN.
2. SEE 1/S2.1 FOR ADDITIONAL TYPICAL SLAB INFORMATION.

3 / S2.1 SECTION - TYP. CONSTRUCTION JOINT
3/4" = 1'-0"

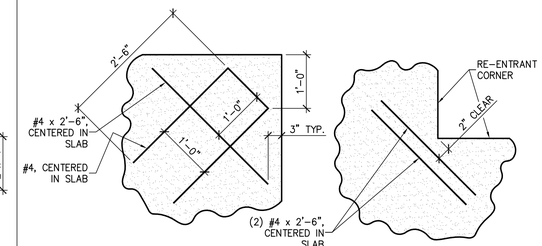

4 / S2.1 DETAIL - TYP. REINF. @ SLAB CORNERS
3/4" = 1'-0"

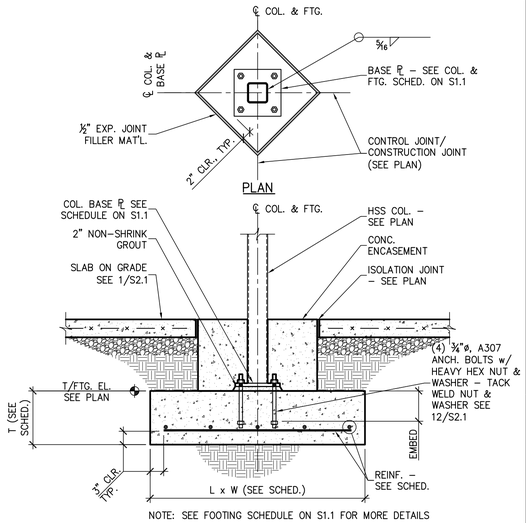

NOTE: SEE FOOTING SCHEDULE ON S1.1 FOR MORE DETAILS

8 / S1.2 SECTION - TYP. HSS COL. FTG.
3/4" = 1'-0"

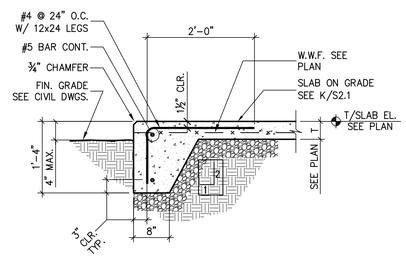

5 / S2.1 SECTION - TURN DOWN SLAB
3/4" = 1'-0"

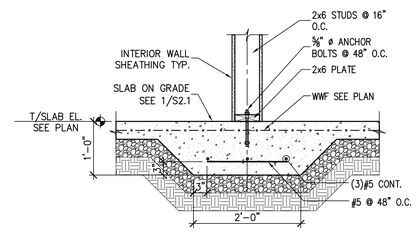

6 / S2.1 THICKEN SLAB TYP.
3/4" = 1'-0"

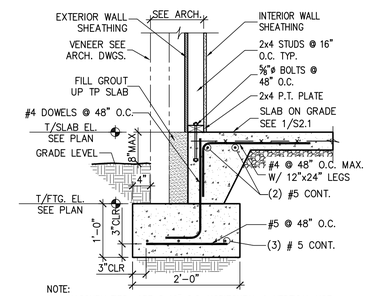

NOTE:
1. MASONRY TIES ARE @ 16" O.C. HORIZONTAL & VERTICAL NOT SHOWN FOR CLARITY

7 / S2.1 TYP. WALL SECTION
3/4" = 1'-0"

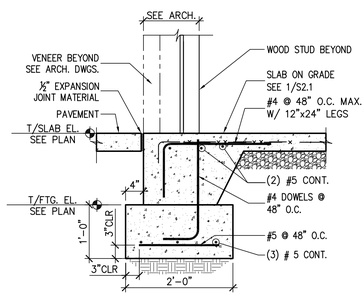

9 / S2.1 SECTION @ DOOR
3/4" = 1'-0"

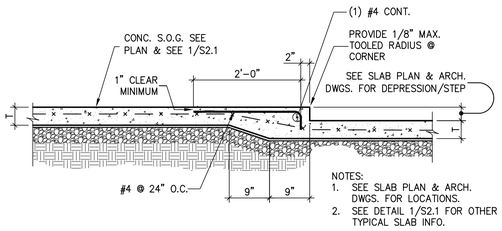

NOTES:
1. SEE SLAB PLAN & ARCH. DWGS. FOR LOCATIONS.
2. SEE DETAIL 1/S2.1 FOR OTHER TYPICAL SLAB INFO.

10 / S2.1 SECTION - DEPRESSED SLAB
3/4" = 1'-0"

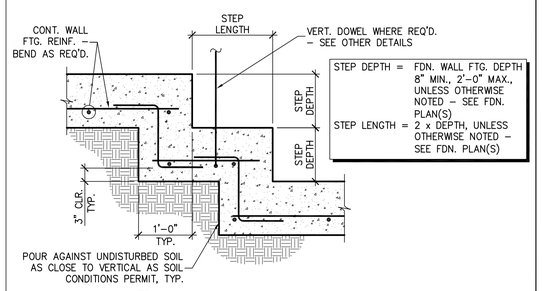

STEP DEPTH = FDN. WALL FTG. DEPTH 8" MIN., 2'-0" MAX., UNLESS OTHERWISE NOTED – SEE FDN. PLAN(S)
STEP LENGTH = 2 x DEPTH, UNLESS OTHERWISE NOTED – SEE FDN. PLAN(S)

11 / S2.1 SECTION - TYP. STEPPED FTG.
3/4" = 1'-0"

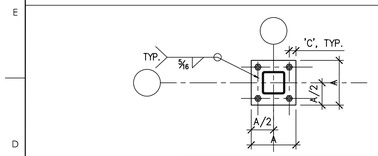

NOTE:
A. DENOTES WIDTH OF BASE PLATE SEE COLUMN SCHEDULE ON S1.1

BOLT DIA.	DISTANCE 'C'
3/4" AND BELOW	1 1/2"

BASE PLATE

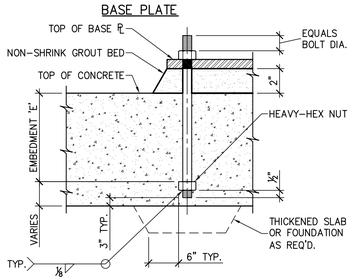

BOLT DIA. 'D'	EMBEDMENT 'E'	REMARKS
3/4"	0'-9"	–

12 / S2.1 TYPICAL ANCHOR BOLT DETAIL
3/4" = 1'-0"

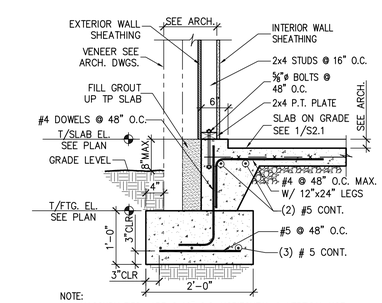

NOTE:
1. MASONRY TIES ARE @ 16" O.C. HORIZONTAL & VERTICAL NOT SHOWN FOR CLARITY

13 / S2.1 TYP. WALL SECTION
3/4" = 1'-0"

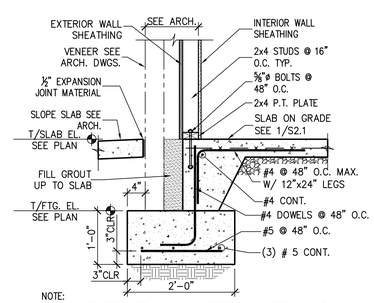

NOTE:
1. MASONRY TIES ARE @ 16" O.C. HORIZONTAL & VERTICAL NOT SHOWN FOR CLARITY

14 / S2.1 WALL SECTION @ VENDING ROOM
3/4" = 1'-0"

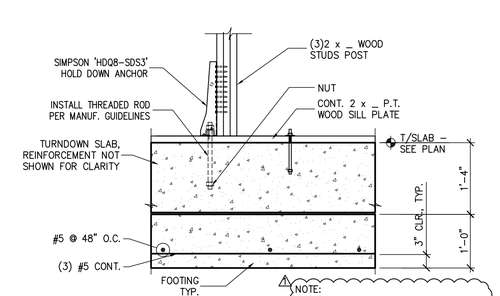

NOTE:
1. APPLY THIS DETAIL AT ALL SHEAR WALL ENDS, TYP.

15 / S2.1 EXTERIOR STUD PACK POST HOLD DOWN-TYP.
3/4" = 1'-0"

MATERIALS KEYING LEGEND

RPA ENGINEERING, P.A.
Structural Engineering Solutions
Engineering License Certificate No. C-2734
102 Regency Blvd. Suite A1 Greenville, NC 27834
Phone : 252-321-6027
Fax : 252-355-2179
RPA Project No.: 2013103

GENERAL NOTES

KEY PLAN

NO	REVISION	DATE
1.	REVISE FOR RE-BID	07-28-2014

SEAL: NORTH CAROLINA PROFESSIONAL SEAL 17348 ENGINEER MARK STATEN KOPP 7/28/14

JKF ARCHITECTURE
P.O. BOX 20662, GREENVILLE, NC 27858, PHONE 252 • 355 • 1068

NC DOT US 70 REST AREA RENOVATIONS
NEW BERN, CRAVEN COUNTY, NC

DRAWING TITLE: FOUNDATION DETAILS AND SECTIONS

SCALE	AS NOTED
DRAWN	GBP
CHECKED	MSR
DATE	04-07-2014
PROJECT NO.	2013-18
DRAWING NO.	S2.1

© COPYRIGHT, JKF ARCHITECTURE PC, JOHN K. FARKAS, AIA

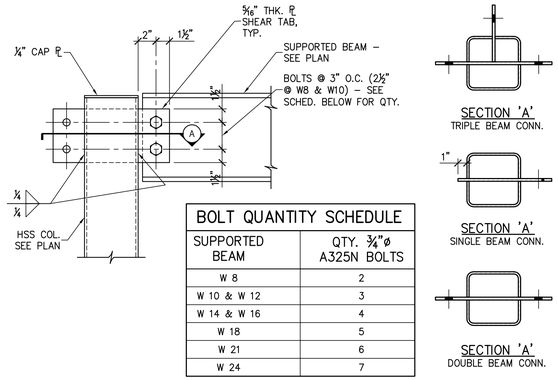

BOLT QUANTITY SCHEDULE	
SUPPORTED BEAM	QTY. ¾"ø A325N BOLTS
W 8	2
W 10 & W 12	3
W 14 & W 16	4
W 18	5
W 21	6
W 24	7

1 S3.1 TYP. BEAM TO HSS COL. SHEAR TAB CONNECTION
1 1/2" = 1'-0"

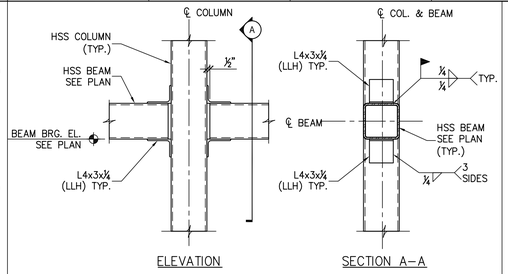

2 S3.1 HSS BEAM TO HSS COLUMN CONN.
1" = 1'-0"

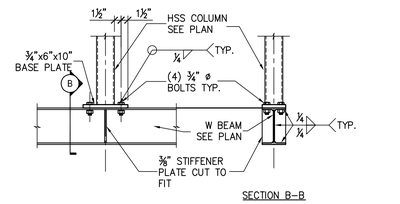

3 S3.1 HSS COLUMN OVER W BEAM
3/4" = 1'-0"

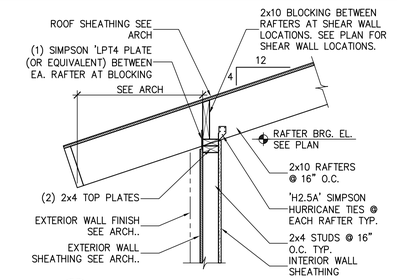

4 S3.1 RAFTER AT WOOD STUD WALL
3/4" = 1'-0"

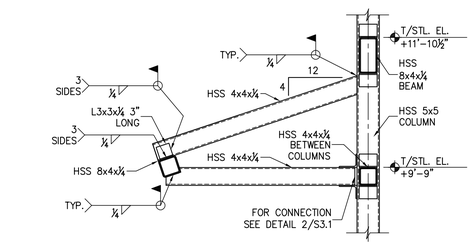

5 S3.1 SECTION AT CANOPY @ STEEL COL.
3/4" = 1'-0"

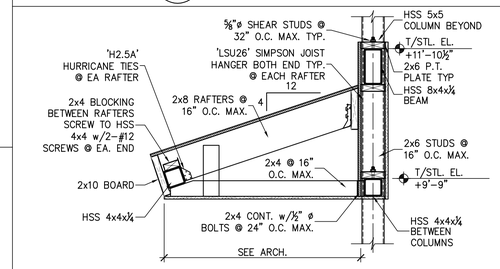

6 S3.1 SECTION AT CANOPY
3/4" = 1'-0"

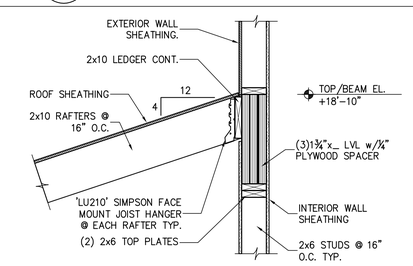

7 S3.1 RAFTER AT LVL BEAM
3/4" = 1'-0"

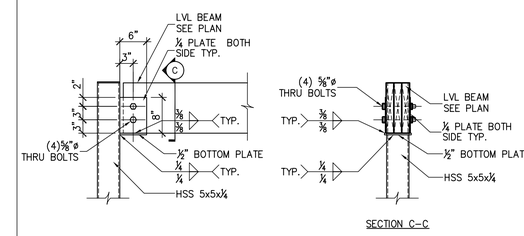

8 S3.1 LVL BEAM TO HSS COLUMN CONN.
3/4" = 1'-0"

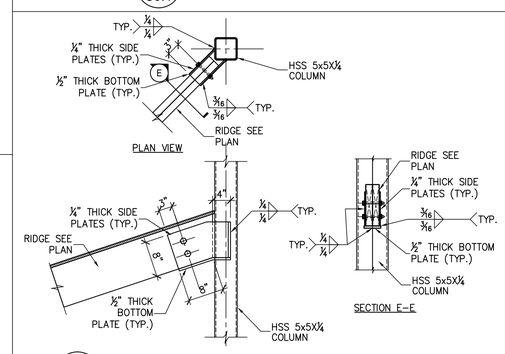

10 S3.1 HIP BEAM TO HSS COLUMN CONN.
3/4" = 1'-0"

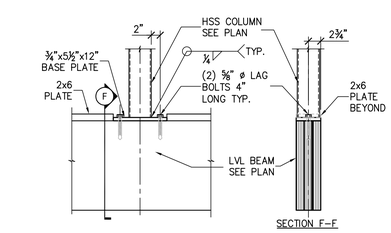

11 S3.1 HSS COLUMN OVER W BEAM
3/4" = 1'-0"

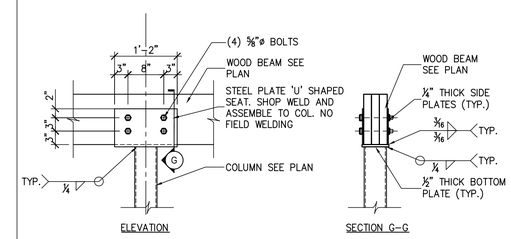

12 S3.1 LVL BEAM TO HSS CONN.
3/4" = 1'-0"

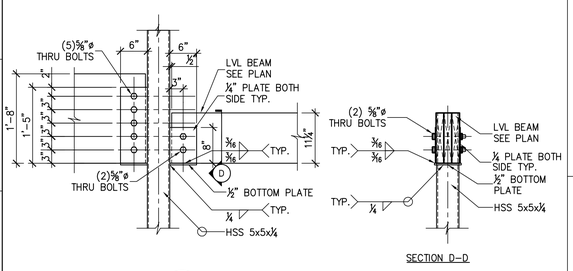

9 S3.1 LVL BEAM TO HSS COLUMN CONN.
3/4" = 1'-0"

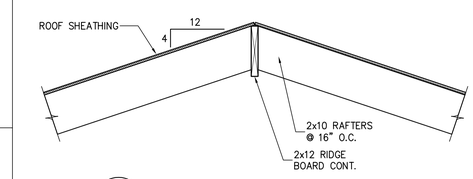

13 S3.1 RAFTER AT RIDGE BEAM
3/4" = 1'-0"

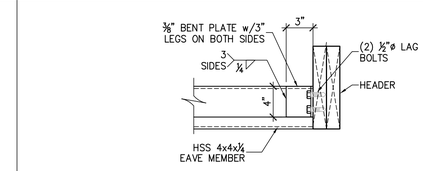

14 S3.1 CONN. EAVE BEAM TO HEADER
3/4" = 1'-0"

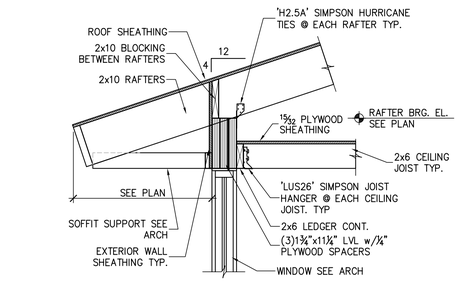

15 S3.1 RAFTER AT LVL BEAM (TOP)
3/4" = 1'-0"

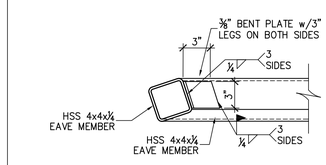

16 S3.1 CONN. EAVE BEAM TO EAVE
3/4" = 1'-0"

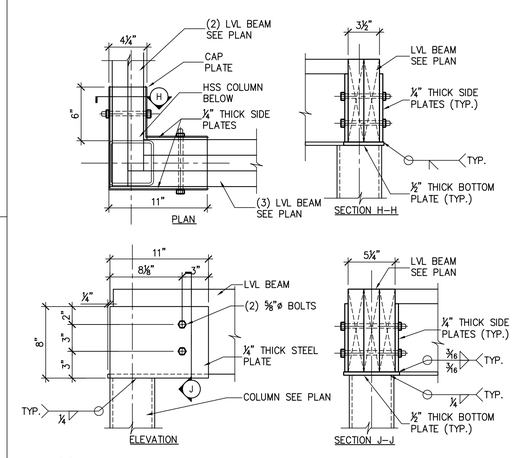

17 S3.1 LVL BEAM TO HSS COLUMN CONN.(CORNER)
1 1/2" = 1'-0"

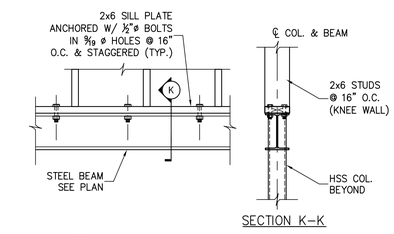

18 S3.1 BEAM W/ WOOD CAP (TYP.)
3/4" = 1'-0"

MATERIALS KEYING LEGEND

GENERAL NOTES

KEY PLAN

NO	REVISION	DATE

RPA ENGINEERING, P.A.
Structural Engineering Solutions
Engineering License Certificate No. C-2734
102 Regency Blvd. Suite A1 Greenville, NC 27834
Phone : 252-321-6027
Fax : 252-355-2179
RPA Project No.: 2013103

SEAL: NORTH CAROLINA PROFESSIONAL SEAL 17348 ENGINEER MARK STATEN ROWE 7/28/14

JKF ARCHITECTURE
P.O. BOX 20662, GREENVILLE, NC 27858, PHONE 252-355-1068

NC DOT US 70 REST AREA RENOVATIONS
NEW BERN, CRAVEN COUNTY, NC

DRAWING TITLE: FRAMING DETAILS AND SECTIONS

SCALE	AS NOTED
DRAWN	GBP
CHECKED	MSR
DATE	04-07-2014
PROJECT NO.	2013-18
DRAWING NO.	S3.1

© COPYRIGHT. JKF ARCHITECTURE PC. JOHN K. FARKAS, AIA

STRUCTURAL DESIGN CRITERIA:

1. **DESIGN LOADS:**

1.1. ROOF DEAD LOAD

	MAX	MIN (FOR UPLIFT)
ROOFING	3 PSF	2 PSF
SHEATHING	3 PSF	2 PSF
ROOF FRAMING	5 PSF	3 PSF
PIPING, DUCT, ETC.	9 PSF	0 PSF
	20 PSF	7 PSF

1.2. LIVE LOADS
- ROOF LIVE LOAD – ALL AREAS GREATER OF 20 PSF MINIMUM OR SNOW LOAD
- 1ST FLOOR LIVE LOAD _______ 100 PSF

1.3. SNOW LOAD
- GROUND SNOW LOAD = 10 PSF (CRAVEN CO.)
- SNOW LOAD IMPORTANCE FACTOR: I = 1.0
- SNOW EXPOSURE FACTOR = 1.0
- ROOF SNOW LOAD = 7 PSF
- BASIC DESIGN ROOF SNOW LOAD = 7.7 PSF

1.4. WIND LOAD
- BASIC WIND SPEED = 120 MPH (CRAVEN CO.)
- WIND IMPORTANCE FACTOR: I = 1.00 (BLDG. CATEGORY II) (ASCE–7–05)
- WIND EXPOSURE CATEGORY: 'B' (ASCE–7–05)
- WIND BASE SHEAR (FOR MWFRS): Vx = 31K Vy = 38K

1.5. SEISMIC LOADS (N.C. STATE BLDG. CODE):
- SEISMIC IMPORTANCE FACTOR: I = 1.0
- OCCUPANCY CATEGORY: ___ I _X_ II ___ III ___ IV
- COMPLIANCE WITH SECTION 1616.4 ONLY? ___ YES _X_ NO
- SEISMIC DESIGN CATEGORY: ___ A ___ B _X_ C ___ D
- MAPPED SPECTRAL RESPONSE ACCELERATION: Ss 17.5 % g S1 8.5 % g
- SPECTRAL RESPONSE COEFFICIENTS: SDS 18.68 % SD1 13.54 %
- SEISMIC RESPONSE COEFFICIENT: Cs 0.062 / 0.029
- RESPONSE MODIFICATION FACTOR, R 6.5 (LIGHT FRAME WALLS)
- R 3.0 (STEEL SYSTEMS NOT SPECIFICALLY DETAILED FOR SEISMIC RESISTANCE)
- SITE CLASSIFICATION: ___ A ___ B ___ C _X_ D ___ E ___ F

BASIC STRUCTURAL SYSTEM:
- _X_ BEARING WALL ______ DUAL w/ SPECIAL MOMENT FRAME
- ___ BUILDING FRAME _____ DUAL w/ INTERMEDIATE R/C OR SPECIAL STEEL
- ___ MOMENT FRAME ______ INVERTED PENDULUM

SEISMIC BASE SHEAR Vx = 8.5K Vy = 5K
ANALYSIS PROCEDURE: ___ SIMPLIFIED _X_ EQUIVALENT LATERAL FORCE ___ MODAL
ARCHITECTURAL, MECHANICAL COMPONENTS ANCHORED? ___ YES _X_ NO
LATERAL DESIGN CONTROL: ___ EARTHQUAKE _X_ WIND

1.6. ALL DESIGN LOADS ARE PER NORTH CAROLINA STATE BUILDING CODE 2012 EDITION.
1.7. WIND LOADS CONTROL THE LATERAL LOAD DESIGN. THE BUILDING UTILIZES SHEAR WALLS AND BRACING FOR LATERAL LOAD RESISTANCE.

2. **FOUNDATION DESIGN CRITERIA:**

2.1. MINIMUM FOOTING BEARING DEPTH BELOW GRADE IS 12 INCHES.
2.2. FOUNDATION DESIGN IS BASED ON AN PRESUMPTIVE SOIL BEARING CAPACITY OF 1,500 PSF.
2.3. CONTRACTOR SHALL FIELD VERIFY THE SOIL BEARING CAPACITY PRIOR TO START OF CONSTRUCTION.

CONCRETE REBAR SPLICE SCHEDULE

BAR SIZE	LAP LENGTH (in.) f'a = 3000 psi	LAP LENGTH (in.) f'c = 4000 psi
#4	29	25
#5	36	31
#6	43	37
#7	63	54
#8	72	61
#9	80	69
#10	89	76

EXPOSED CONCRETE FINISH SCHEDULE

AREA	FINISH	COMMENTS
BASEMENT WALLS	SMOOTH FORM	SEE NOTE 1
ALL EXTERIOR WALLS, CURBS, UNLESS NOTED OTHERWISE	SMOOTH FORM	SEE NOTE 1
EXTERIOR CONCRETE PAVEMENT, SIDEWALKS	COARSE BROOM	SEE NOTE 1
SLAB ON GRADE	TROWEL	SEE NOTE 1
EXT. EQUIP. PADS	COARSE BROOM	SEE NOTE 1
EXTERIOR STAIRS	COARSE BROOM	SEE NOTE 1
–	–	–

NOTES:
1. SEE SPECIFICATIONS SECTION, '03300 CAST–IN–PLACE CONCRETE', FOR ADDITIONAL INFORMATION.

BRICK VENEER LINTEL SCHEDULE

OPENING DIMENSION	ANGLE SIZE	ORIENTATION
0'–0" THRU 4'–0"	L 7 x 4 x ⅜	LLH
4'–1" THRU 6'–0"	L 7 x 4 x ⅜	LLH
6'–1" THRU 8'–0"	L 6 x 6 x ⅜	N/A
8'–1" THRU 10'–0"	L 6 x 6 x ⅜	N/A
–	–	–

NOTES:
1. PROVIDE LOOSE STEEL ANGLE LINTELS FOR ALL BRICK VENEER OPENINGS, PER ABOVE DATA UNLESS OTHERWISE NOTED.
2. PROVIDE MINIMUM OF 8" BEARING FOR ALL LINTELS UNLESS OTHERWISE NOTED.
3. ALL EXTERIOR LINTELS SHALL BE HOT–DIP GALVANIZED

GENERAL STRUCTURAL NOTES:

1. **GENERAL NOTES**

1.1. METHODS, PROCEDURES AND SEQUENCES OF CONSTRUCTION ARE THE RESPONSIBILITY OF THE CONTRACTOR. THE CONTRACTOR SHALL TAKE ALL NECESSARY PRECAUTIONS TO MAINTAIN AND INSURE THE INTEGRITY OF THE STRUCTURE AT ALL STAGES OF CONSTRUCTION.
1.2. THE CONTRACTOR SHALL REFER TO THE ARCHITECTURAL, MECHANICAL, ELECTRICAL, AND PLUMBING DRAWINGS FOR SLEEVES, CURBS, INSERTS OR OPENINGS NOT HEREIN INDICATED.
1.3. COORDINATE THESE DRAWINGS WITH THE ARCHITECTURAL, MECHANICAL, ELECTRICAL, PLUMBING AND CIVIL DRAWINGS.
1.4. VERIFY ALL FLOOR AND ROOF OPENING SIZES AND LOCATIONS, EQUIPMENT PAD SIZES AND LOCATIONS, ANCHOR BOLT LAYOUTS, ETC., WITH EQUIPMENT SELECTED.
1.5. VERIFY BUILDING LOCATION AND ORIENTATION WITH OWNER AND LOT SETBACK REQUIREMENTS BEFORE ANY CONSTRUCTION IS STARTED ON PROJECT.
1.6. DO NOT CUT, NOTCH, OR OTHERWISE MODIFY ANY STRUCTURAL MEMBERS UNLESS SPECIFICALLY INDICATED ON THE DRAWINGS WITHOUT APPROVAL OF THE ARCHITECT OR ENGINEER.
1.7. CUTTING OF STEEL MEMBERS AND INSTALLATION OF HOLES IN STEEL MEMBERS SHALL BE DONE BY CUTTING OR DRILLING. DO NOT USE TORCHES FOR CUTTING UNLESS APPROVED BY THE ARCHITECT OR ENGINEER.
1.8. CONTRACTOR IS RESPONSIBLE FOR DESIGN AND INSTALLATION OF ALL SHORING REQUIRED TO SUPPORT NEW AND EXISTING STRUCTURAL ELEMENTS.
1.9. SEE PROJECT SPECIFICATIONS FOR ADDITIONAL INFORMATION.

2. **FOUNDATION**

2.1. ALL FOOTINGS SHALL BE ON UNDISTURBED SOIL OR 98% COMPACTED FILL PER ASTM D698.
2.2. NO FOOTINGS OR SLABS SHALL BE POURED INTO OR AGAINST SUBGRADE CONTAINING FREE WATER, FROST, ICE OR LOOSE MATERIAL.
2.3. EXCAVATIONS FOR FOOTINGS SHALL HAVE THE SIDES AND BOTTOMS TEMPORARILY LINED WITH 6 MIL. POLYETHYLENE IF PLACEMENT OF CONCRETE DOES NOT OCCUR WITHIN 24 HRS OF THE EXCAVATION OF THE FOOTING.
2.4. ADVERSE FOUNDATION CONDITIONS NOTED DURING CONSTRUCTION SUCH AS SOFT SOILS, ORGANIC MATTER, ETC., SHALL BE REPORTED TO THE ENGINEER BEFORE FURTHER CONSTRUCTION IS ATTEMPTED.
2.5. IF UNDERMINING OF FOOTINGS OCCURS, FILL VOIDS WITH LEAN CONCRETE MIX. DO NOT ATTEMPT TO REPLACE AND RECOMPACT SOIL.
2.6. SEE PROJECT SPECIFICATIONS FOR ADDITIONAL INFORMATION.

3. **CONCRETE**

3.1. ALL PLACED CONCRETE, SHALL HAVE NORMAL WEIGHT COARSE AGGREGATES, AND SHALL HAVE A MINIMUM COMPRESSIVE STRENGTH (f'c) AT 28 DAYS AS SHOWN ON THE CONCRETE MATERIALS SCHEDULE. SEE SPECIFICATIONS FOR FURTHER INFORMATION.
3.2. GROUT FOR BASE PLATES SHALL BE NON–METTALIC, NON–SHRINKABLE GROUT, AND SHALL HAVE A MINIMUM SPECIFIED COMPRESSIVE STRENGTH, AT 28 DAYS, OF 5000 PSI.
3.3. NO CALCIUM CHLORIDE SHALL BE USED IN ANY CONCRETE.
3.4. CHAMFER ALL EXPOSED EXTERNAL CORNERS OF CONCRETE WITH ¾" x 45 DEGREE CHAMFER, UNLESS OTHERWISE NOTED.
3.5. HORIZONTAL FOOTING AND HORIZONTAL WALL REINFORCING SHALL BE CONTINUOUS, AND SHALL HAVE 90 DEGREE BENDS AND EXTENSIONS, OR CORNER BARS OF EQUIVALENT SIZE LAPPED, WITH A CLASS B TENSION SPLICE, AT CORNERS AND INTERSECTIONS. TOP BAR CRITERIA SHALL APPLY IF 12" OR MORE OF FRESH CONCRETE IS PLACED BELOW BAR.
3.6. SEE ARCHITECTURAL DRAWINGS FOR ALL WATERPROOFING / DAMPPROOFING DETAILS.
3.7. ALL DOWELS SHALL MATCH SIZE AND NUMBER OF MAIN REINFORCING, UNLESS OTHERWISE NOTED ON THE DRAWINGS.
3.8. SEE ARCHITECTURAL DRAWINGS FOR TYPE AND LOCATION OF FLOOR FINISHES.
3.9. SEE MECHANICAL, ELECTRICAL, PLUMBING AND CIVIL DRAWINGS FOR ADDITIONAL WALL / SLAB OPENINGS NOT SHOWN ON THE STRUCTURAL DRAWINGS.
3.10. ALL REINFORCING SHALL CONFORM TO ASTM A615, GRADE 60.
3.11. WELDED WIRE FABRIC SHALL CONFORM TO ASTM A185.
3.12. DETAIL AND FABRICATE REINFORCING STEEL IN ACCORDANCE WITH THE ACI DETAILING MANUAL.
3.13. IN–PLACE REINFORCING STEEL, SHALL BE REVIEWED BY THE ENGINEER PRIOR TO PLACEMENT OF CONCRETE.
3.14. AT CORNERS AND INTERSECTIONS, PROVIDE BARS OF THE SAME NUMBER AND SIZE AS THE LONGITUDINAL BARS IN THE FOOTING.
3.15. SEE PROJECT SPECIFICATIONS FOR ADDITIONAL INFORMATION.

4. **STRUCTURAL STEEL**

4.1. DETAILING OF STRUCTURAL STEEL CONNECTIONS, MUST BE CONSISTENT WITH RECOGNIZED, PUBLISHED METHODS, SUCH AS THE "AISC STEEL CONSTRUCTION MANUAL, 13TH EDITION", "DETAILING FOR STEEL CONSTRUCTION", OR "VOLUME II CONNECTIONS MANUAL OF STEEL CONSTRUCTION".
4.2. MEMBERS AND CONNECTIONS NOT FULLY DEVELOPED ON THE CONTRACT DRAWINGS, AND CONNECTIONS FOR ANY PORTION OF THE STRUCTURE NOT SHOWN ON THE CONTRACT DRAWINGS, SHALL BE DESIGNED AND SEALED BY A REGISTERED PROFESSIONAL ENGINEER, AND DETAILED ON THE SHOP DRAWINGS.
4.3. ALTERNATIVE CONNECTION DETAILS, MAY BE SUBMITTED ON SHOP DRAWINGS BY THE CONTRACTOR, ONLY IF ACCOMPANIED BY COMPLETE STRUCTURAL CALCULATIONS, PREPARED AND SEALED BY AN ENGINEER, LICENSED IN THE PROJECT'S JURISDICTION. FAILURE TO SUBMIT SUCH CALCULATIONS FOR REVIEW, CONCURRENT WITH SHOP DRAWING ERECTION PLANS AND DETAILS, WILL BE CAUSE FOR REJECTION OF THAT SUBMITTAL.
4.4. CALCULATIONS FOR DETAILS, MUST SHOW A RATIONAL ANALYSIS OF A COMPLETE LOAD PATH, INCLUDING LOCAL EFFECTS ON WEBS, FLANGES ETC., OF THE CONNECTED MEMBERS AND THE DEVICES (PLATES, SEATS, BRACKETS, BOLTS, WEBS, ETC.) AFFECTING ALL CONNECTIONS.
4.5. STRUCTURAL STEEL DETAILING, FABRICATION AND ERECTION, SHALL CONFORM TO THE "AISC SPECIFICATION FOR STRUCTURAL STEEL BUILDINGS" (MARCH 9, 2005), AND THE "AISC CODE OF STANDARD PRACTICE FOR STEEL BUILDINGS AND BRIDGES" (MARCH 18, 2005).
4.6. WELDING SHALL CONFORM TO THE AMERICAN WELDING SOCIETY STRUCTURAL WELDING CODE, AWS D1.1. ELECTRODES FOR SHOP AND FIELD WELDS, SHALL BE CLASS E70XX. ALL WELDING SHALL BE DONE BY QUALIFIED, CERTIFIED WELDERS, PER THE ABOVE STANDARD.
4.7. SHOP AND FIELD TESTING OF WELDS AND BOLTS, SHALL BE PERFORMED AS OUTLINED IN THE SPECIFICATIONS.
4.8. ALL FILLET WELDS SHALL BE A MINIMUM OF ¼ INCH, UNLESS OTHERWISE NOTED.
4.9. THERE SHALL BE NO FIELD CUTTING OF STRUCTURAL STEEL MEMBERS, FOR THE WORK OF OTHER TRADES, WITHOUT PRIOR WRITTEN APPROVAL OF THE ENGINEER.
4.10. ALL STRUCTURAL STEEL WORK, SHALL CONFORM TO THE LATEST EDITION OF THE "MANUAL OF STEEL CONSTRUCTION" PUBLISHED BY THE AMERICAN INSTITUTE OF STEEL CONSTRUCTION.
4.11. ALL STRUCTURAL STEEL SHAPES USED, SHALL BE IN ACCORDANCE WITH ASTM A992 SPECIFICATIONS (Fy = 50 KSI). ALL STRUCTURAL TUBING USED, SHALL BE IN ACCORDANCE WITH ASTM A500, GRADE B (Fy = 46 KSI). ALL PIPE USED, SHALL BE IN ACCORDANCE WITH ASTM A53 (Fy = 36 KSI). ALL MISCELLANEOUS STEEL USED, SHALL BE IN ACCORDANCE WITH ASTM A36 (Fy = 36 KSI).
4.12. ALL FIELD BOLTED CONNECTIONS, SHALL BE BEARING TYPE CONNECTIONS (THREADS INCLUDED IN THE SHEAR PLANE), WITH ¾" DIAMETER, ASTM A325 HIGH STRENGTH BOLTS, UNLESS OTHERWISE NOTED ON THE DRAWING. ALL BOLTS SHALL BE TIGHTENED TO A "SNUG–TIGHT" CONDITION, U.N.O.
4.13. FOR ALL FLOOR AND ROOF OPENINGS, THE CONTRACTOR SHALL VERIFY OPENING LOCATIONS WITH EQUIPMENT SELECTED, AND MAKE ANY NECESSARY MODIFICATIONS AT NO ADDITIONAL COST. IT IS THE RESPONSIBILITY OF FABRICATOR, TO RECEIVE ALL NECESSARY INFORMATION, PRIOR TO FABRICATION OF ANY STEEL.
4.14. ALL STRUCTURAL STEEL WHICH IS TO BE SPRAYED WITH FIREPROOFING SHALL NOT BE PRIMED OR PAINTED. STEEL WHICH IS NOT SPRAYED WITH FIREPROOFING SHALL BE PRIMED AND PAINTED. DO NOT PAINT SURFACES TO BE EMBEDDED IN CONCRETE.
4.15. BEAM END CONNECTIONS, SHALL BE DESIGNED FOR A MINIMUM GRAVITY LOAD OF 50% U.D.L., PER THE "AISC MANUAL OF STEEL CONSTRUCTION, 9TH EDITION", UNLESS OTHERWISE INDICATED.
4.16. THE CONTRACTOR SHALL PROVIDE ALL TEMPORARY GUYING AND BRACING REQUIRED, TO ERECT AND HOLD THE STRUCTURE IN PROPER ALIGNMENT, UNTIL ALL PERMANENT BRACING, ROOF & WALL SHEATHING, OR METAL ROOF DECK ARE IN PLACE, TO RESIST LATERAL MOVEMENT OF THE FRAME.
4.17. SEE PROJECT SPECIFICATIONS FOR ADDITIONAL INFORMATION.

5. **WOOD FRAMING**

5.1. ALL STRUCTURAL WOOD MEMBERS SHALL BE No. 2 SOUTHERN YELLOW PINE, 19% MAXIMUM MOISTURE CONTENT, UNLESS OTHERWISE NOTED. INTERIOR NON BEARING PARTITIONS MAY BE No. 2 SPRUCE (SPF).
5.2. ALL WOOD FRAMING, DIRECTLY EXPOSED TO WEATHER, OR IN DIRECT CONTACT WITH MASONRY, SOIL OR CONCRETE, SHALL BE PRESSURE TREATED, UNLESS OTHERWISE NOTED.
5.3. ALL LVL's, DIRECTLY EXPOSED TO WEATHER, OR IN DIRECT CONTACT WITH MASONRY, SOIL OR CONCRETE, SHALL BE EXTERIOR GRADE, UNLESS NOTED OTHERWISE.
5.4. ALL NAILED CONNECTIONS SHALL BE IN ACCORDANCE WITH NORTH CAROLINA STATE BUILDING CODE TABLE 2304.9.1, – FASTENING SCHEDULE, UNLESS OTHERWISE NOTED.
5.5. FRAMING CONNECTIONS THAT ARE BOLTED OR SCREWED, SHALL BE INSTALLED IN ACCORDANCE WITH THE LATEST EDITION OF THE NATIONAL DESIGN SPECIFICATION FOR WOOD.
5.6. WALL SHEATHING SHALL BE 15/32" PLYWOOD, UNLESS OTHERWISE NOTED. ATTACH WALL SHEATHING TO FRAMING WITH 8d NAILS @ 4" O.C. AT PANEL EDGES AND 12" O.C. AT INTERIOR MEMBERS. PROVIDE SOLID BLOCKING AT PANEL EDGES (48" O.C.).
5.7. ⚠ ROOF SHEATHING SHALL BE ¾" PLYWOOD, UNLESS OTHERWISE NOTED. ATTACH ROOF SHEATHING TO FRAMING WITH 10d NAILS @ 4" O.C. AT PANEL EDGES AND 12" O.C. AT INTERIOR MEMBERS. PROVIDE SOLID BLOCKING AT PANEL EDGES (48" O.C.).
5.8. PROVIDE STUDS AND HEADERS AT ALL EXTERIOR WALLS AND INTERIOR BEARING WALLS AS FOLLOWS, UNLESS OTHERWISE NOTED:

OPENING WIDTH	STUDS	HEADER
0'–0" TO 6'–0"	2 KING STUDS, 1 JACK STUD	(2) 2 x 10 @ 2 x 4 WALL (3) 2 x 10 @ 2 x 6 WALL
6'–1" TO 8'–0"	2 KING STUDS, 2 JACK STUDS	(2) 2 x 10 @ 2 x 4 WALL (3) 2 x 10 @ 2 x 6 WALL
8'–1" TO 12'–0"	3 KING STUDS, 2 JACK STUDS	(2) 2 x 12 @ 2 x 4 WALL (3) 2 x 12 @ 2 x 6 WALL

13.16 SEE PROJECT SPECIFICATIONS FOR ADDITIONAL INFORMATION.

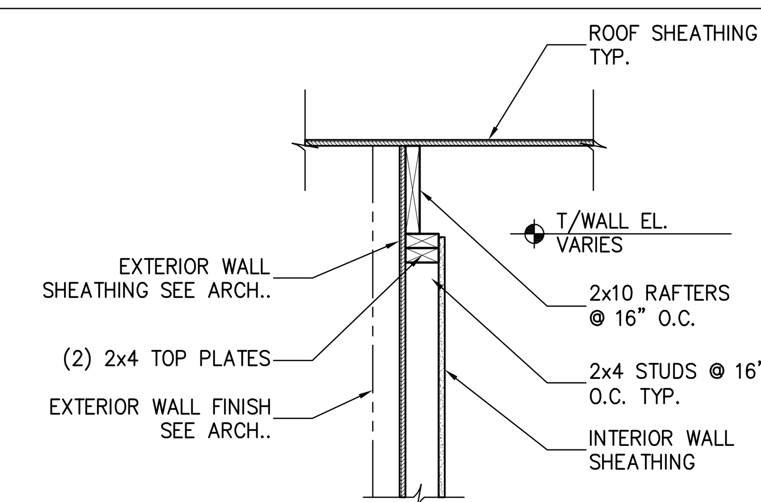

5 / S4.1 SHEAR WALL CONN. PARALLEL TO RAFTERS
3/4" = 1'-0"

CONCRETE MATERIALS SCHEDULE

LOCATION	MINIMUM COMPRESSIVE STRENGTH (AT 28 DAYS)	REMARKS
FOUNDATIONS	3000 PSI	–
FLOOR SLAB, WALLS, EQUIPMENT PADS,	3000 PSI	–
CONCRETE FOR MASONRY CORES, BOND BEAMS	ASTM C476 GROUT	–

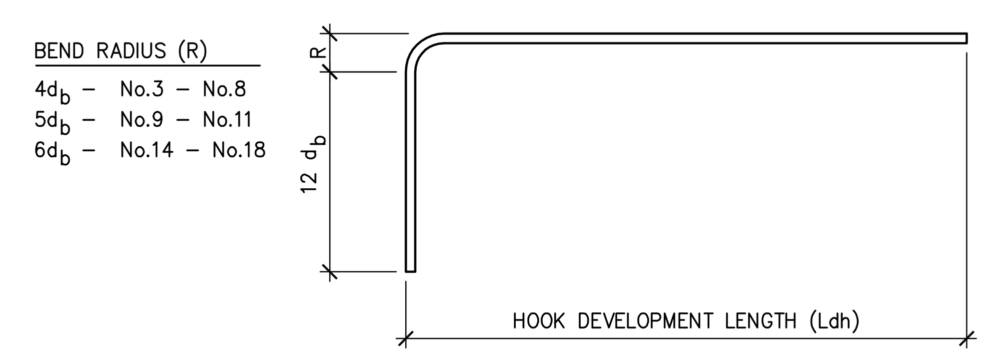

STANDARD HOOKS IN TENSION (PER ACI 318–02)

BAR SIZE	HOOK DEVELOPMENT LENGTH Ldh (INCHES) f'c 3000 psi	HOOK DEVELOPMENT LENGTH Ldh (INCHES) f'c 4000 psi
#3	9	7
#4	11	10
#5	14	12
#6	17	15
#7	19	17
#8	22	19
#9	25	22
#10	28	24
#11	31	27

NOTES:
1. CONCRETE IS NORMAL WEIGHT CONCRETE. IF LIGHTWEIGHT CONCRETE IS USED, MULTIPLY LENGTHS IN TABLE BY 1.3.
2. BAR YIELD STRENGTH (fy) IS 60 KSI.
3. SIDE COVER REQUIREMENTS OF ACI SECTION 12.5.3 ARE ASSUMED TO NOT BE MET.
4. TIE OR STIRRUP REQUIREMENTS OF ACI SECTION 12.5.3 ARE ASSUMED TO NOT BE MET.
5. REDUCTION OF EXCESS REINFORCEMENT IS NOT TAKEN.
6. HOOK DEVELOPMENT LENGTH IS VALID FOR 180° HOOKS ALSO.

d_b = BAR DIAMETER

4 / S4.1 HOOKS IN TENSION SCHEDULE
NTS

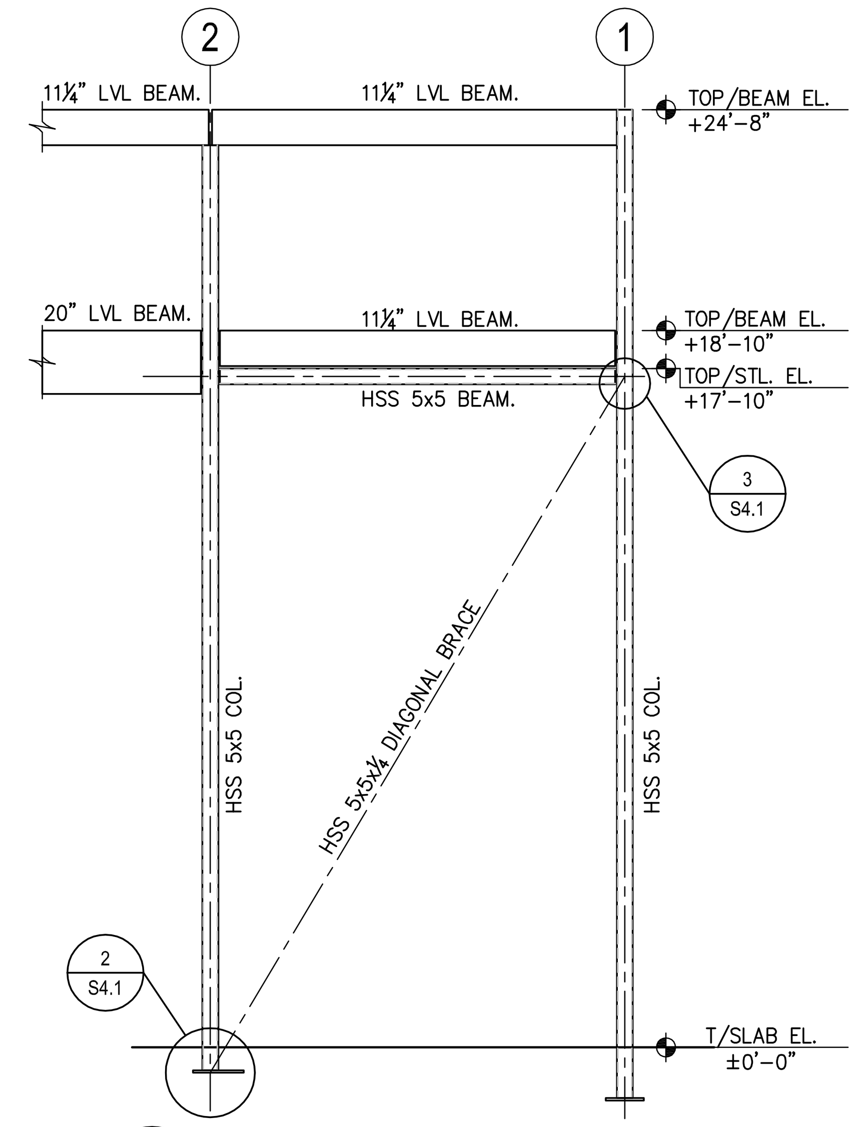

1 / S4.1 VERTICAL BRACING ELEVATION
3/4" = 1'-0" (COLUMN LINE A & B)

NOTES:
1. BRACING SIZE HSS 5x5x¼ TYP.
2. ALL BOLTS ARE ¾"ø A–325–N, UNLESS NOTED OTHERWISE.
3. SIZE AND CONFIGURATION OF GUSSET PLATES WILL VARY DEPENDING UPON ANGLES OF BRACING MEMBERS.
4. ADJUST BASE PLATE LENGTH WHERE REQUIRED TO PROVIDE WELD LENGTH FOR GUSSET PLATE CONN. PROVIDE (2) ADDITIONAL ANCHOR BOLTS WHERE BASE PLATE LENGTH EXCEEDS 5" PAST ADJACENT BOLTS.
5. LENGTH & SIZE OF WELDS AS REQUIRED TO DEVELOP FORCES SHOWN ON THE STEEL BRACING ELEVATION.
6. BOLTS SPACES @ 3" O.C. (U.N.O.)

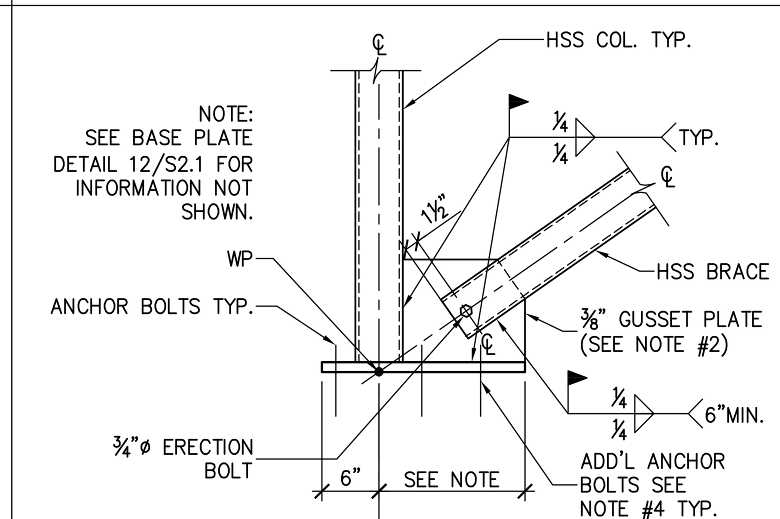

2 / S4.1 BRACING DETAIL AT BASE
3/4" = 1'-0"

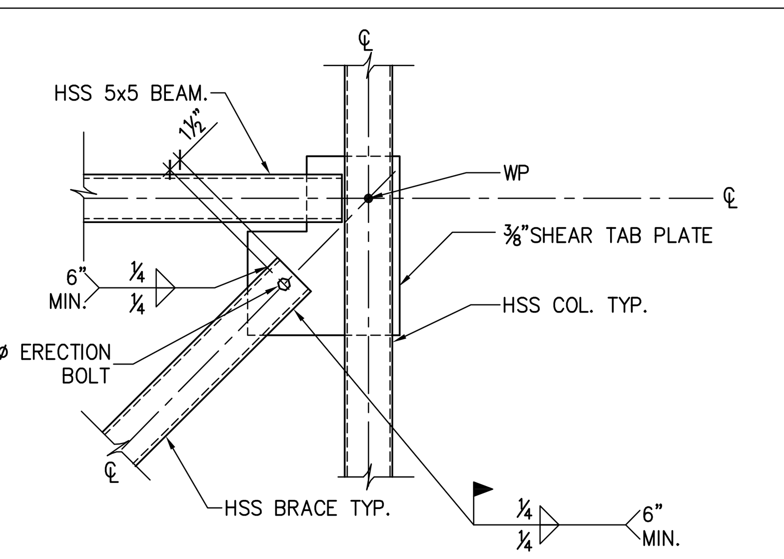

3 / S4.1 BRACING DETAIL AT BEAM
3/4" = 1'-0"

MATERIALS KEYING LEGEND

RPA ENGINEERING, P.A.
Structural Engineering Solutions
Engineering License Certificate No. C-2734
102 Regency Blvd.
Suite A1
Greenville, NC 27834
Phone : 252-321-6027
Fax : 252-355-2179
RPA Project No.: 2013103

GENERAL NOTES

KEY PLAN

NO	REVISION	DATE
1.	REVISE FOR RE–BID	07–28–2014

SEAL
NORTH CAROLINA PROFESSIONAL ENGINEER SEAL 17348 MARK STATEN ROY 7/28/14

JKF ARCHITECTURE
P.O. BOX 20662, GREENVILLE, NC 27858, PHONE 252 - 355 - 1068

NC DOT US 70 REST AREA RENOVATIONS
NEW BERN, CRAVEN COUNTY, NC

DRAWING TITLE
STRUCTURAL NOTES, DESIGN CRITERIA, SCHEDULES AND DETAILS

SCALE	AS NOTED
DRAWN	GBP
CHECKED	MSR
DATE	04-07-2014
PROJECT NO.	2013-18
DRAWING NO.	S4.1

© COPYRIGHT, JKF ARCHITECTURE PC, JOHN K. FARKAS, AIA

PLUMBING FIXTURE SCHEDULE *

MARK	DESCRIPTION	ALTERNATE MANUFACTURER/MODEL	ALTERNATE MANUFACTURER/MODEL
WC/ WCHC	WATER CLOSET (WALL MOUNT BACK SPUD) AMERICAN STANDARD "AFWALL FLOWISE" #3353.001, ELONGATED BOWL, 1.28 GPF, VITREOUS CHINA, AND 1 1/2" BACK SPUD. WCHC TO BE ADA COMPLIANT. PROVIDE OPEN FRONT SEAT, AND SENSOR W/ MANUAL OVERRIDE FLUSH VALVE, EQUAL TO SLOAN OPTIMA MODEL 152-1.28-ES-S-TMO VALVE.	ZURN #Z5617 FIXTURE. ZURN #ZEMS6140AV FLUSH VALVE.	KOHLER KINGSTON #K-4329 FIXTURE. HYDROTEK H-8000C-CB FLUSH VALVE.
WC-1	WATER CLOSET (FLOOR MOUNT TOP SPUD) AMERICAN STANDARD "MADERA FLOWISE" #3461.001, ELONGATED BOWL, 1.28 GPF, VITREOUS CHINA, AND 1 1/2" TOP SPUD, ADA COMPLIANT. PROVIDE OPEN FRONT SEAT, AND SENSOR W/ MANUAL OVERRIDE FLUSH VALVE EQUAL TO SLOAN OPTIMA 111-1.28-ES-S-TMO (AC POWERED) FLUSH VALVE.	ZURN #Z5665 FIXTURE. ZURN #ZEMS6000IS FLUSH VALVE.	KOHLER HIGHCREST #K-4302 FIXTURE. HYDROTEK H8-128 VALVE.
UR	URINAL AMERICAN STANDARD "WASHBROOK FLOWISE" #6515.001, 1.0 GPF, VITREOUS CHINA, 3/4" BACK SPUD, AND SENSOR W/ MANUAL OVERRIDE FLUSH VALVE SLOAN #195-1.0-ES-S-TMO (AC POWERED). ADA COMPLIANT.	ZURN #Z5760 WITH ZURN ZEMS6195AV-OB FLUSH VALVE.	TOTO #UT104EV WITH TOTO #TEU2LN11 FLUSH VALVE.
L1	LAVATORY (ACCESSIBLE, WALL HUNG) AMERICAN STANDARD "LUCERNE" # 0356.421 WHITE WITH CONCEALED ARM CARRIER AND DRAIN ASSEMBLY (7723.018). ADA COMPLIANT. FURNISH WITH SLOAN ETF-610 AC POWERED SENSOR FAUCET. PROVIDE ACCESSORIES AS REQUIRED. COORDINATE TRIM AND SINK FAUCET DRILLING FOR SINGLE HOLE OR AS REQUIRED PER OWNER.	KOHLER GREENWICH #K-2032 WITH HYDROTEK H-1000C FAUCET.	ELJER MURRAY II #051-0244 WITH AMERICAN STANDARD INNSBROOK #6059.205.
L2	2- STATION LAVATORY (ACCESSIBLE) SLOAN SLOANSTONE TWO STATION LAVATORY # ELS-72275-MSD, ADA COMPLIANT. VERIFY COLOR W/ARCH. FURNISH WITH SLOAN OPTIMA EAF-275 SOLAR POWERED FAUCETS. PROVIDE BATTERY POWERED SOAP DISPENSER ESD-350.	BRADLEY MODEL EXD-2N WITH HYDROTEK 7000SLE SOLAR SENSOR FAUCETS.	WILLOUGHBY MODEL WAW-232-DMF WITH TOTO TEL3GS10 SOLAR SENSOR FAUCETS.
MS	MOP SINK ACORN SERIES TRH, TERRAZZO SERVICE BASIN WITH REDUCED HEIGHT AND STAINLESS STEEL GRID STRAINER WITH 3" PIPE CONNECTION. COORDINATE SIZE W/NBL AND SBL. VERIFY W/ARCH. FAUCET: ACORN MODEL KFC CHROME PLATED SERWICE FAUCET WITH VACUUM BREAKER, INTEGRAL STOPS, ADJUSTABLE WALL BRACE, PAIL HOOK AND 3/4" HOSE THREAD ON SPOUT. HOSE & HOSE BRACKET: ACORN MODEL KH36 LONG FLEXIBLE 5/8" RUBBER HOSE, CLOTH REINFORCED.	FLORESTONE SERIES 92 WITH SPEAKMAN #MR-371 FAUCET, HOSE AND MOP HANGER.	CRANE MOP SINK #TSB-3002 WITH #830-AA FAUCET, #832-AA HOSE, #1453-BB STRAINER, #893-CC MOP HANGER, #E-77-AA BUMPER GUARD, AND STAINLESS STEEL SPLASH GUARD.
CP	CIRCULATING PUMP BELL & GOSSET, SERIES NBF-22 IN-LINE CIRCULATOR PUMP, 1/12 HP, 115 VAC, FLA=0.8 1 PH., 3/4" CONN., WITH A MAXIMUM OF 22 GPM AND 15' TDH. PUMP TO BE ALL BRONZE CONSTRUCTION, COORDINATE WITH ELEC. CONTRACTOR FOR POWER FEED. PROVIDE DISCONNECT SWITCH.	TACO MODEL #110.	ARMSTRONG MODEL #S-25.
EWC	HIGH/LOW ELECTRIC WATER COOLER OASIS DUAL LEVEL ELECTRIC WATER COOLER. MODEL # PBACSL. ADA COMPLIANT. PIPE TO SINGLE DRAIN AND SUPPLY LINE. VERIFY HIGH/LOW UNIT MOUNTING SIDES AND MODEL.	HALSEY TAYLOR #HAC8BL-Q.	ELKAY MODEL #EZSTL8LC.
TPV	TRAP PRIMER VALVE PPP INC. MODEL# PR-500, 1/2" INLET, 1/2" OUTLET	JOSAM #88300.	WATTS #A200.
WCS	WATER CLOSET SUPPORTS ZURN Z1203-N (FOR WC) 4" NO HUB. COORDINATE MODEL WITH LEFT/RIGHT FLOW DIRECTION. PROVIDE MODEL Z1203-N-X FOR WCHC.	JAY R. SMITH #210 SERIES.	JOSAM STD. 4" NO HUB, 2" VENT.
URS	URINAL SUPPORTS ZURN Z-1222 WITH ADJUSTABLE PLATES.	JAY R. SMITH #0637.	JOSAM #17550.
HB	HOSE BIBB ZURN Z-1330-C, 3/4" WALL HYDRANT WITH VANDAL RESISTANT VACUUM BREAKER. ENCASED WITH KEY LOCK.	WATTS #HY-330.	JAY R. SMITH #5509QT.
1 EWH-1	ELECTRIC WATER HEATER #1 (LTHW) AO SMITH WATER HEATER MODEL #DEN-120, 119 GALLONS, 4500W, 3/4" INLET AND OUTLET, 208 VOLT, 1 PHASE, AO SMITH MODEL #PMC-10 EXPANSION TANK.	BRADFORD WHITE #LD-120R3-3. AMTROL ST-12-C EXPANSION TANK.	STATE #ES6-120-DORT. STATE ETC-2X EXPANSION TANK.
1 EWH-2	ELECTRIC WATER HEATER #2 (HTHW) A.O. SMITH MODEL EJC-10, 10 GALLON, 1,650 WATT, 3/4" INLET AND OUTLET, ~~120V. MOUNT ON WALL. MODEL# PMC-2~~ EXPANSION TANK.	RHEEM #81VP10S. AMTROL ST-5-C EXPANSION TANK.	BRADFORD WHITE #M-1-10U6SS. STATE ETC-2X EXPANSION TANK.
FD	FLOOR DRAIN ZURN ZN-415 WITH DEEP SEAL P-TRAP, 5" X 5" TYPE "S" SQUARE STRAINER AND 3" CONNECTION, VANDAL-PROOF TOP. PROVIDE MODEL WITH TRAP PRIMER CONNECTION ONLY FOR FLOOR DRAINS IN AREAS NOTED ON SHEET P300.	JOSAM #30000-S.	JAY R. SMITH #2005-B.
MTR	WATER METER NEPTUNE, 3" TURBINE METER INDICATION SHALL BE WITH BOTTOM OF GAUGE TOWARD FLOOR.	PARK ENVIRONMENTAL EQUIP. 3" TURBINE.	HERSEY HORIZON 3" TURBINE.
FPHB	FREEZE-PROOF HOSEBIBB ZURN Z-1320-C, 3/4" NON FREEZE WALL HYDRANT WITH VANDAL RESISTANT VACUUM BREAKER. ENCASED WITH KEY LOCK.	JAY R. SMITH #5509QT.	WATTS HY-725.
RPZ	3" REDUCED PRESSURE BACKFLOW PREVENTER WATTS MODEL #009QT-3" REDUCED PRESSURE BACKFLOW PREVENTER, CAST IRON CONSTRUCTION.	ZURN #375-3"	FEBCO #860-3"
US	UTILITY SINK FLORESTONE MODEL FM-1, FLOOR MOUNTED SINK TO COME WITH 4 HEAVY DUTY MOLDED LEGS, WITH 1 1/2" DRAIN OPENING, 20 GALLON CAPACITY. PROVIDE FAUCET, P-TRAP, AND SHUT-OFF VALVES.	---	---

* OR APPROVED EQUAL

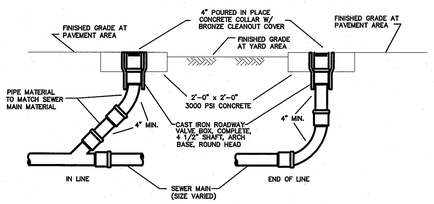

4 / P1.1 GRAVITY SEWER CLEAN-OUT
NTS

LOAD SUMMARY – PLUMBING

WASTE DEMAND (FU)	WATER DEMAND (FU)	WATER DEMAND (GPM)
127.0	172.0	58.3

GENERAL NOTES – PLUMBING

1. PREPLAN ALL WORK PRIOR TO ORDERING, PURCHASING, OR FABRICATING ANY PART OF THE WORK DESCRIBED BY THIS DRAWING.
2. IMMEDIATELY NOTIFY THE ENGINEER OF ANY CONFLICTS WITH EXISTING FIELD CONDITIONS OR THE WORK OF OTHER TRADES.
3. RESOLVE ALL CONFLICTS PRIOR TO INCURRING ANY MATERIAL OR LABOR EXPENSES.
4. COMPLY WITH THE MANUFACTURER'S TECHNICAL INSTRUCTIONS WHEN INSTALLING PLUMBING FIXTURES, MATERIALS, AND DEVICES.
5. LOCATE FIXTURES AND EQUIPMENT GENERALLY AS SHOWN ON THE PLANS; HOWEVER, COORDINATE LOCATIONS WITH ACTUAL FIELD CONDITIONS TO PRESERVE ALL CODE-REQUIRED AND MANUFACTURER – REQUESTED SERVICE CLEARANCES.
6. COORDINATE ROUTING OF ALL PIPING WITH BUILDING STRUCTURE AND WITH THE WORK OF OTHER TRADES. OFFSET VENT PIPING AROUND BEAMS AND JOISTS AS NECESSARY.
7. ALL HANDICAP FIXTURES AND INSTALLATION OF HANDICAP FIXTURES SHALL CONFORM TO ADA REQUIREMENTS.
8. AT EXTERIOR WALL, INSTALL WATER PIPING ON HEATED SIDE OF WALL INSULATION.
9. PROVIDE WATER HAMMER ARRESTORS AT THE END OF EACH COLD AND HOT WATER BRANCH RISER. SIZE ARRESTOR APPROPRIATELY.
10. PROVIDE CONCRETE RING FOR ALL EXTERIOR CLEAN-OUTS.
11. REVIEW SITE PLAN FOR UTILITIES AND ORIENTATION PRIOR TO START OF WORK.
12. G.C. TO PROVIDE ROOF PENETRATIONS.
13. PROVIDE HTHW AT 120 DEGREES (F) AND LTHW AT 90 DEGREES (F).

PROVIDE HEAT TRAPS ON THE SUPPLY AND DISCHARGE PIPING OF THE WATER HEATERS UNLESS PROVIDED BY WATER HEATER MANUFACTURER. PROVIDE "HUSH HEAT TRAP FITTINGS" BY PERFECTION CORPORATION OR APPROVED EQUAL. HEAT TRAPS ARE REQUIRED PER SECTION 804.4 OF THE ENERGY CODE.

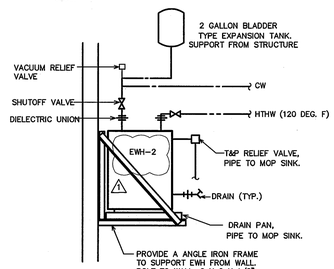

NOTE:
WATER HEATERS, PIPING, AND PIPING APPURTENANCES PROVIDED BY P.C. WATER HEATER SUPPORTS BY P.C.

2 / P1.1 EWH-2 DETAIL
NTS

NOTE:
ALL MOUNTING HEIGHTS SHALL MEET THE NCSBC AND ADA.

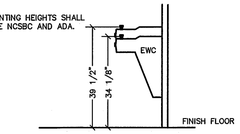

1 / P1.1 EWC MOUNTING DETAIL
NTS

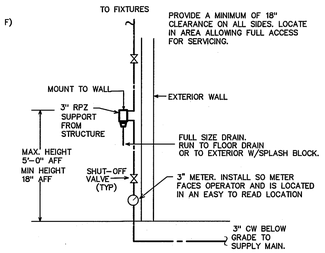

3 / P1.1 RPZ MOUNTING DETAIL
NTS

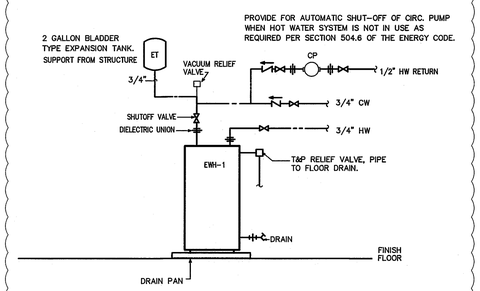

NOTE:
WATER HEATERS, PIPING, AND PIPING APPURTENANCES PROVIDED BY P.C. WATER HEATER SUPPORTS BY P.C.

5 / P1.1 EWH-1 DETAIL
NTS

SYMBOL LEGEND – PLUMBING

SYMBOL	DESCRIPTION
	WASTE PIPING (W)
	VENT PIPING (V)
	COLD WATER PIPING (CW)
	HOT WATER PIPING (HW)
HWR	HOT WATER RETURN PIPING (HWR)
HTHW	HIGH TEMPERATURE HW PIPING (HTHW) 120 DEG. F
LTHW	LOW TEMPERATURE HW PIPING (LTHW) 90 DEG. F
COFF	CLEANOUT FINISH FLOOR
WCO/HCO	WALL/HORIZONTAL CLEANOUT
COFG	CLEANOUT FINISH GRADE–PROVIDE FLUSH CONCRETE COLLAR AND BRONZE COVER
	DIELECTRIC UNION
	SHUT-OFF VALVE
	CHECK VALVE
	BALANCING VALVE
	CIRCULATION PUMP (CP)
	WATER METER (MTR)
	VENT THRU ROOF (VTR)

ENGINEER

ENGINEER
BURKE DESIGN GROUP, PA
CONSULTING ENGINEERS
3305-109 Durham Drive
Raleigh, North Carolina 27603
919.771.1916 fax: 919.779.0826
email: benburke@nc.rr.com
Corp. License # C-2652

NORTH CAROLINA PROFESSIONAL SEAL 22038 ENGINEER BENJAMIN E. BURKE
7/31/14

GENERAL NOTES

KEY PLAN

NO	REVISION	DATE
1	REVISE FOR RE-BID	7-28-2014

JKF
ARCHITECTURE

P.O. BOX 20662 GREENVILLE, NC 27858 PHONE 252-355-1068

NC DOT PROJECT
42229.1.1 (K-5101) US 70 REST AREA RENOVATIONS
NEW BERN, CRAVEN COUNTY, NC

DRAWING TITLE
PLUMBING SCHEDULE & NOTES

SCALE	1/4" = 1'-0"
DRAWN	JME
CHECKED	BEB
DATE	01-10-2014
PROJECT NO.	2013-18
DRAWING NO	P1.1

© COPYRIGHT, JKF ARCHITECTURE P.C., JOHN K. FARKAS, AIA

COORDINATE ROUTING OF DWV LINES LINES WITH STRUCTURE ALL TRADES, OWNER, AND ARCH.

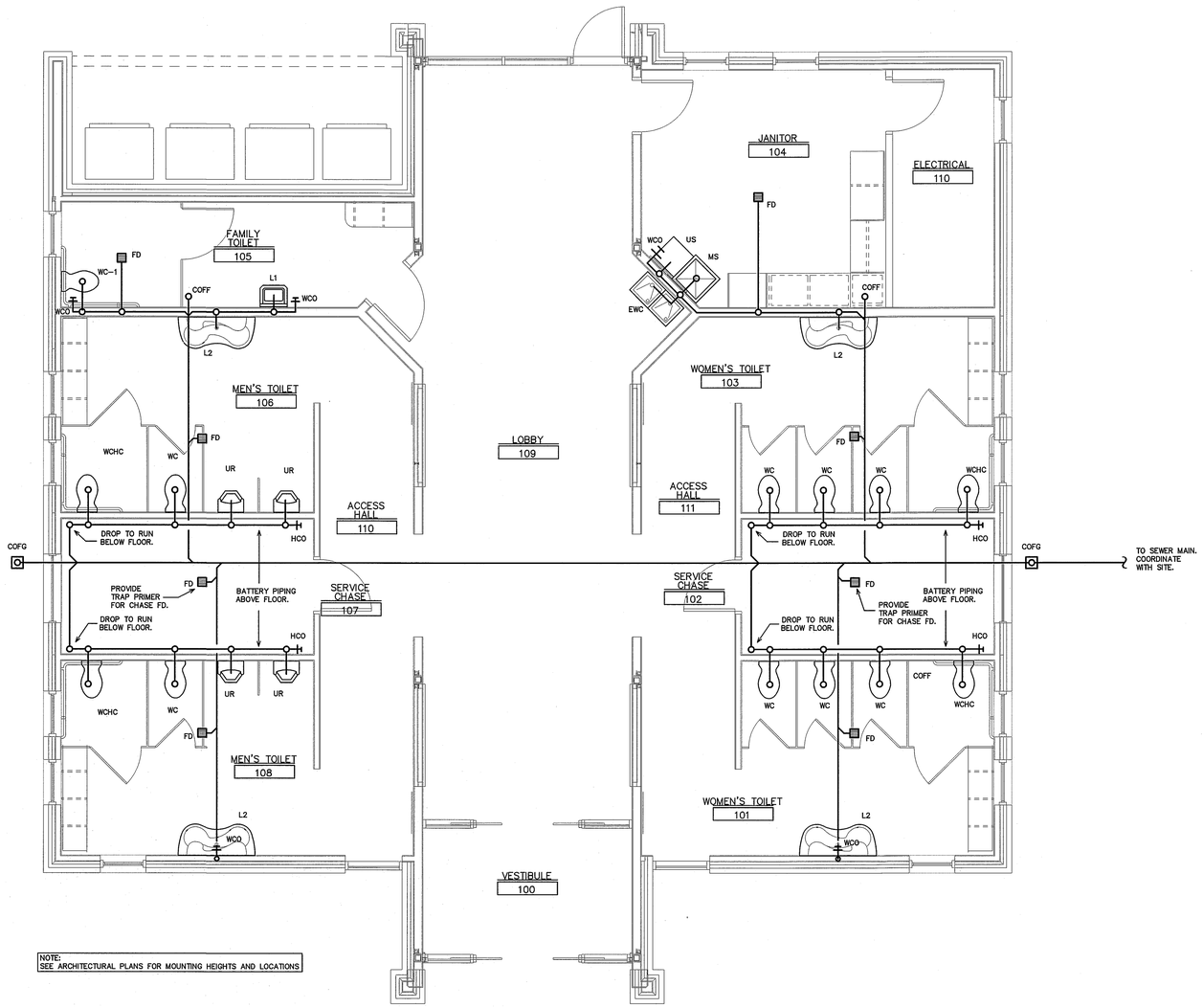

NOTE:
SEE ARCHITECTURAL PLANS FOR MOUNTING HEIGHTS AND LOCATIONS

1 / P1.2 DWV PLAN
1/4" = 1'-0"

ENGINEER

ENGINEER
BURKE DESIGN GROUP, PA
CONSULTING ENGINEERS
3305-109 Durham Drive
Raleigh, North Carolina 27603
919.771.1916 fax: 919.779.0826
email: benburke@nc.rr.com
Corp. License # C-2652

NORTH CAROLINA PROFESSIONAL ENGINEER SEAL 10038 BENJAMIN E. BURKE

4/2/14

GENERAL NOTES

KEY PLAN

NO	REVISION	DATE

JKF
ARCHITECTURE

P.O. BOX 20662 GREENVILLE, NC 27858 PHONE 252-355-1068

NC DOT PROJECT
42229.1.1 (K-5101) US 70 REST AREA RENOVATIONS
NEW BERN, CRAVEN COUNTY, NC

DRAWING TITLE
DWV PLAN

SCALE	1/4" = 1'-0"
DRAWN	JME
CHECKED	BEB
DATE	01-10-2014
PROJECT NO.	2013-18
DRAWING NO	P1.2

© COPYRIGHT, JKF ARCHITECTURE PC, JOHN K. FARKAS, AIA

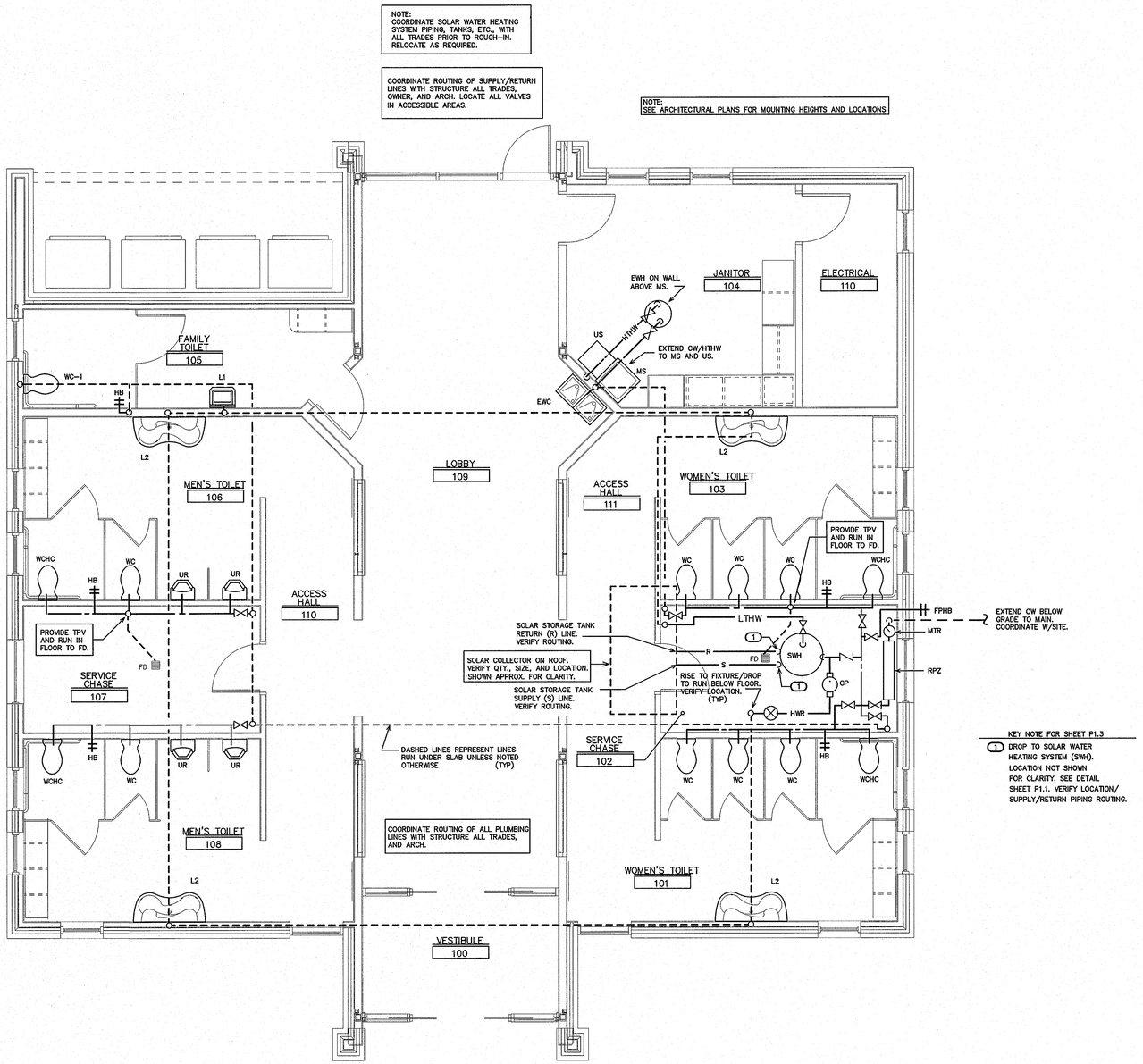

1 / P1.3 SUPPLY PLAN
1/4" = 1'-0"

ENGINEER

ENGINEER
BURKE DESIGN GROUP, PA
CONSULTING ENGINEERS
3305-109 Durham Drive
Raleigh, North Carolina 27603
919.771.1916 fax: 919.779.0826
email: benburke@nc.rr.com
Corp. License # C-2652

NORTH CAROLINA REGISTERED PROFESSIONAL ENGINEER SEAL 22038 BENJAMIN E. BURKE

GENERAL NOTES

KEY PLAN

NO	REVISION	DATE

JKF
ARCHITECTURE
P.O. BOX 20662 GREENVILLE, NC 27858 PHONE 252-355-1068

NC DOT PROJECT
42229.1.1 (K-5101) US 70 REST AREA RENOVATIONS
NEW BERN, CRAVEN COUNTY, NC

DRAWING TITLE
SUPPLY PLAN

SCALE	1/4" = 1'-0"
DRAWN	DS
CHECKED	BEB
DATE	01-10-2014
PROJECT NO.	2013-18
DRAWING NO	P1.3

© COPYRIGHT, JKF ARCHITECTURE P.C., JOHN K. FARKAS, AIA

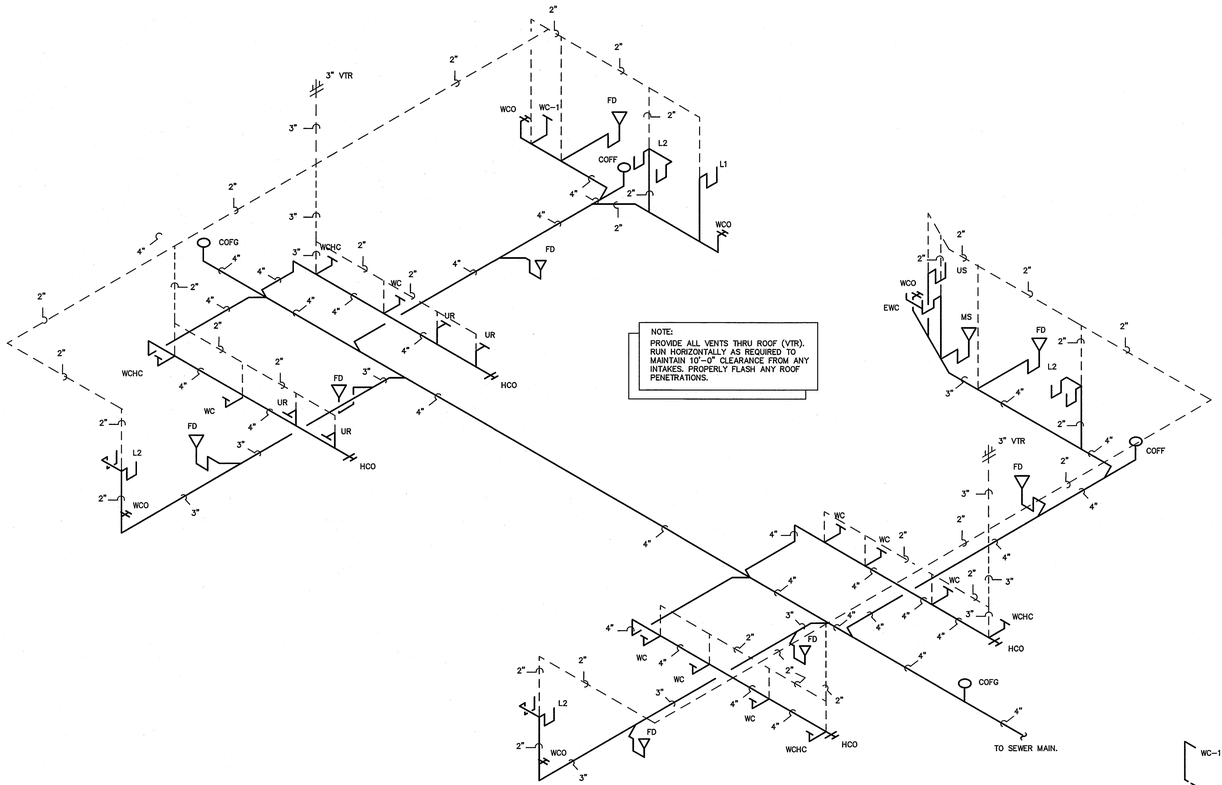

NOTE:
PROVIDE ALL VENTS THRU ROOF (VTR). RUN HORIZONTALLY AS REQUIRED TO MAINTAIN 10'-0" CLEARANCE FROM ANY INTAKES. PROPERLY FLASH ANY ROOF PENETRATIONS.

1 / P1.4 DWV RISER
NTS

PIPE SIZING SCHEDULE				
FIXTURE TYPE	DRAIN	VENT	CW	HW
(WC) FLUSH VALVE WATER CLOSET	3"	1 1/2"	1"	–
(LAV) LAVATORY	1 1/2"	1 1/4"	–	1/2"
(UR) URINAL	2"	1 1/2"	3/4"	–
(FD) FLOOR DRAIN	3"	1 1/2"	–	–
(EWC) ELECTRIC WATER COOLER	1 1/4"	1 1/4"	1/2"	–
(MS) MOP SINK	3"	1 1/2"	1/2"	1/2"
(US) UTILITY SINK	1 1/2"	1 1/4"	–	1/2"
(HB) HOSE BIBB	–	–	1/2"	–
(FPHB) FREEZE PROOF HOSE BIBB	–	–	1/2"	–

RISER NOTES:
REPRESENTATIVE SIZES ARE GIVEN FOR EACH TYPE OF FIXTURE. SEE PIPE SIZING SCHEDULE.
MINIMUM 2" DRAIN LINE SIZE UNDER SLAB.
MAINTAIN PIPE SIZES SHOWN UNTIL LARGER SIZE IS REACHED.
PIPE SIZES ARE MINIMUMS FOR INDIVIDUAL FIXTURES U.O.N.

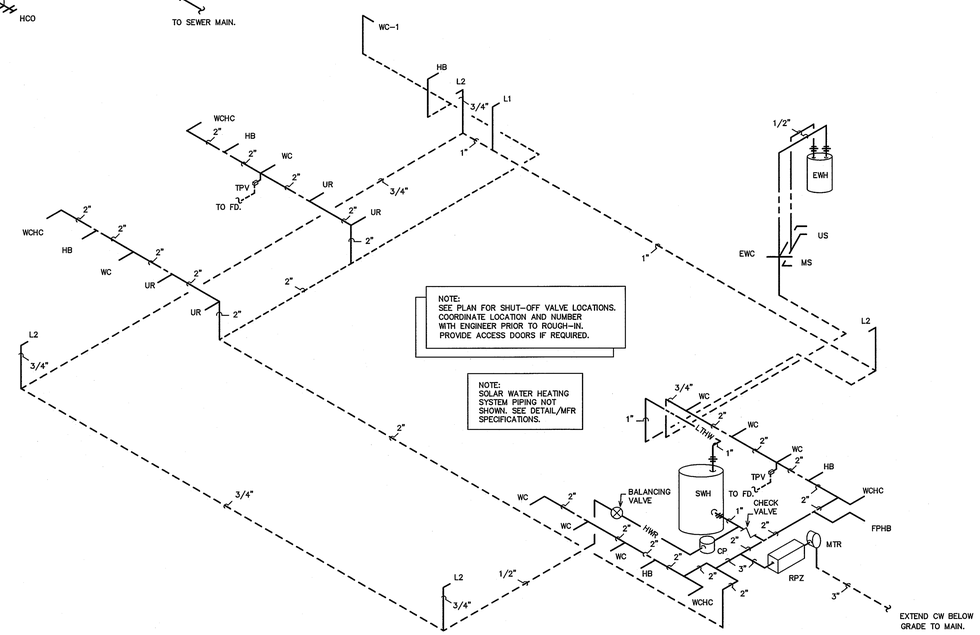

NOTE:
SEE PLAN FOR SHUT-OFF VALVE LOCATIONS. COORDINATE LOCATION AND NUMBER WITH ENGINEER PRIOR TO ROUGH-IN. PROVIDE ACCESS DOORS IF REQUIRED.

NOTE:
SOLAR WATER HEATING SYSTEM PIPING NOT SHOWN. SEE DETAIL/MFR SPECIFICATIONS.

1 / P1.4 SUPPLY RISER
NTS

ENGINEER

ENGINEER
BURKE DESIGN GROUP, PA
CONSULTING ENGINEERS
3305-109 Durham Drive
Raleigh, North Carolina 27603
919.771.1916 fax: 919.779.0826
email: benburke@nc.rr.com
Corp. License # C-2652

NORTH CAROLINA PROFESSIONAL SEAL 22038 ENGINEER BENJAMIN E. BURKE
4/9/14

GENERAL NOTES

KEY PLAN

NO	REVISION	DATE

JKF
ARCHITECTURE

P.O. BOX 20662 GREENVILLE, NC 27858 PHONE 252-355-1068

NC DOT PROJECT
42229.1.1 (K-5101) US 70 REST AREA RENOVATIONS
NEW BERN, CRAVEN COUNTY, NC

DRAWING TITLE
RISERS

SCALE	1/4" = 1'-0"
DRAWN	DS
CHECKED	BEB
DATE	01-10-2014
PROJECT NO.	2013-18
DRAWING NO	P1.4

© COPYRIGHT, JKF ARCHITECTURE P.C. JOHN K. FARKAS, AIA

HVAC SCHEDULE

EQUIP. NUMBER	INDOOR UNIT											OUTDOOR UNIT					
	MODEL NO.	FAN			COOLING CAPACITY		COIL HEATING CAPACITY	ELECTRICAL HEATING		VOLTAGE	MCA	FUSE/ CB MAX	MODEL NO.	POWER	COMP. RLA	MCA	FUSE/ CB MAX	SEER
		CFM	HP	POWER	MIN TOTAL	MIN SENS.		MODEL #	CAPACITY									
AHU-1/HP-1	CARRIER FX4DNF49T00	1600@1/2"WC	3/4	208-1	45.8 MBH	34.9 MBH	24.7/46.5 MBH @ 17/47F	KFCEH0901N10	34 MBH (7.5 KW)	208-1	53.8	60 (TD)	CARRIER 25HBC548A003	208-1	21.8	28.5	40 A (TD)	15
AHU-2/HP-2	CARRIER FX4DNF49T00	1600@1/2"WC	3/4	208-1	45.8 MBH	34.9 MBH	24.7/46.5 MBH @ 17/47F	KFCEH0901N10	34 MBH (7.5 KW)	208-1	53.8	60 (TD)	CARRIER 25HBC548A003	208-1	21.8	28.5	40 A (TD)	15

SCHEDULE NOTES:

1. PROVIDE WITH DISCONNECT SWITCH, ELECTRONIC PROGRAMMABLE THERMOSTAT WITH LOCKING COVER, TIME DELAY RELAY, FILTER RACK WITH FILTERS, AND HEAD PRESSURE CONTROLLER AND SINGLE POINT POWER CONNECTIONS.
2. PROVIDE MINIMUM OUTDOOR AIR FLOW SETTINGS AS PER PLAN.
3. AHU's ARE BASED ON 1/2" EXT. WATER COLUMN STATIC.
4. OR EQUAL BY TRANE OR YORK
5. PROVIDE SHUTDOWN RELAY SWITCH WITH A MAXIMUM OF 60 SECOND DELAY ON HEATING CYCLE, TO BE WIRED TO THE DUCT SMOKE DETECTORS AS PROVIDED BY THE ELECTRICAL CONTRACTOR.
6. SPECIFIED COOLING CAPACITIES ARE BASED ON STANDARD CONDITIONS: EAT= DB/WB = 80/67 F; AMBIENT = 95 F. COIL HEATING CAPACITIES ARE BASED ON 65 F EDB. ELECTRIC HEATER RATINGS ARE AT 240V.
7. PROVIDE NON-PROGRAMMABLE, AUTOMATIC CHANGEOVER, DIGITAL THERMOSTATS FOR AHU-1/2. FAN SHALL BE SET IN "ON" POSITION.

ENERGY RECOVERY UNIT SCHEDULE

EQUIP. NUMBER	MODEL NO.	FANS / MOTORS							THERMAL PERFORMANCE						NOTES:
									ENERGY RECOVERY (THERMAL) CAPACITY		INLET / OUTLET CONDITIONS				
		FLOW	STATIC PRESSURE (EXTERNAL)	FAN MOTORS FAN MOTORS	F.L.A. (FOR UNIT SINGLE POINT)	VOLTS/ PHASE/ HZ	MCA	FUSE/CB MAX	COOLING CAPACITY (MBH / TON)	HEATING CAPACITY (MBH)	OUTSIDE AIR TEMP(F) & HUMIDITY (DB) / (WB)		ROOM AIR TEMP (F) & HUMIDITY (DB) / (WB OR RH)		
									TOTAL	TOTAL	SUMMER	WINTER	SUMMER	WINTER	
ERV-1 & 2	MICROMETIL FWHH11H69000HEF	750 CFM	0.5 IN H_2O	(2) FOR FANS	14.76 A	208-230V 1 PH 60 HZ	18.45 A	25 A	23.55/1.96	36.04	94F / 72F	22F	75F / 50%	68F / 50%	ALL

NOTES:

1. FLOW & LOADS BASED ON ARI-1060 PERFORMANCE & CERTIFIED CORE.
2. SHUT DOWN ALL FANS ON DUCT SMOKE DETECTOR ALARM CONDITION.
3. VENTILATION TYPE: ERV WHEEL, HEAT & HUMIDITY TRANSFER.
4. INCLUDE INTEGRAL DISPOSABLE FILTERS (OUTSIDE AND ROOM AIR) WITH MERVB OR BETTER RATING.
5. INCLUDE SINGLE POINT ELECTRICAL POWER CONNECTION.
6. HOUSING SHALL BE GALVANIZED, .20 GAUGE (OR THICKER) STEEL WITH LAPPED CORNERS.
7. OR EQUALS BY SEMCO, OR THYBAR.
8. SERVICE ACCESS DOORS SHALL BE GASKETED & PROVIDE ACCESS FOR MAINTENANCE OF ALL COMPONENTS.
9. INCLUDE INSULATION ON ALL CASE WALLS & DOORS.
10. INCLUDE THERMALLY PROTECTED MOTORS WITH STARTERS.
11. UL LISTED 1995
12. PROVIDE WITH FUSED DISCONNECT SWITCH.

AIR DISTRIBUTION SCHEDULE

MARK	MANUFACTURER *	MODEL NO.	FACE SIZE	NECK SIZE	MATERIAL	SERVICE	NOTES
A	CARNES	RADAH	12" X 6"	12" X 6"	ALUMINUM	SUPPLY	COLOR BY ARCHITECT SIDEWALL MOUNT
B	CARNES	RADAH	18" X 6"	12" X 6"	ALUMINUM	SUPPLY	COLOR BY ARCHITECT SIDEWALL MOUNT
RA	CARNES	RAJAH	18" X 18"	18" X 18"	ALUMINUM	RETURN	COLOR BY ARCHITECT CEILING MOUNT
EA	CARNES	RAJAH	14" X 10"	14" X 10"	ALUMINUM	EXHAUST	COLOR BY ARCHITECT SIDEWALL MOUNT
EB	CARNES	SSEA	17" DIA.	8" DIA.	STEEL	EXHAUST	COLOR BY ARCHITECT DUCT MOUNTED

COORDINATE BORDER TYPE WITH THE CEILING/WALL TYPE. SEE ARCH SHEETS
PROVIDE DUCT TRANSITIONS AS REQUIRED.

* OR APPROVED EQUAL BY TUTTLE & BAILEY, OR METALAIRE

EXHAUST FAN SCHEDULE

EF-1	
EXHAUST FAN #1	* CARNES MODEL# VEDK-08-F3 ROOF MOUNTED EXHAUST FAN, 120 CFM @ 1/4" SP, 700 RPM, 1/20 HP, 120V. THE ELECTRICAL CONTRACTOR SHALL PROVIDE THE SWITCH AND WIRE THE UNIT. THE HVAC CONTRACTOR SHALL PROVIDE UNIT, AND FACTORY PREFAB ROOF CURB. LOCATE EXHAUST TERMINATION A MINIMUM OF 10'-0" FROM ANY INTAKES. PROVIDE FACTORY SPEED CONTROLLER FOR BALANCING FAN ONLY.
EF-2	
EXHAUST FAN #2	* CARNES MODEL# VEDK-08-F3 ROOF MOUNTED EXHAUST FAN, 120 CFM @ 1/4" SP, 700 RPM, 1/20 HP, 120V. THE ELECTRICAL CONTRACTOR SHALL PROVIDE THE SWITCH AND WIRE THE UNIT. THE HVAC CONTRACTOR SHALL PROVIDE UNIT, AND FACTORY PREFAB ROOF CURB. LOCATE EXHAUST TERMINATION A MINIMUM OF 10'-0" FROM ANY INTAKES. PROVIDE FACTORY SPEED CONTROLLER FOR BALANCING FAN ONLY.

* OR APPROVED EQUAL

LEGEND - MECHANICAL

- 12 X 8 — RECTANGULAR GALVANIZED STEEL DUCTWORK
- 12" DIA. — RIGID ROUND GALVANIZED STEEL DUCTWORK
- RIGID ROUND RUNOUT DUCT TO SUPPLY DIFFUSER
- SUPPLY DIFFUSER
- RETURN GRILLE
- T — THERMOSTAT WITH LOCKING, VANDAL PROOF COVER
- TS — REMOTE WALL MOUNTED TEMPERATURE SENSOR
- X / XXX — GRILLE TYPE / MIN. CFM
- D — CONDENSATE DRAIN PIPING
- R — REFRIGERANT PIPING

OUTDOOR AIR CALCULATIONS

OUTDOOR VENTILATION AIR PROVIDED PER TABLE 403.3, 2012 NORTH CAROLINA STATE BUILDING CODE: MECHANICAL CODE.

APPLICATION	CFM/FLUSHING FIXTURE
GANG TOILET ROOMS	70 CFM EACH
18 FLUSHING FIXTURES X 70 CFM = 1120 CFM 1500 CFM EXHAUST PROVIDED BY (2) ERVS	

APPLICATION	CFM/FLUSHING FIXTURE
FAMILY TOLIET ROOM	50 CFM EACH
1 FLUSHING FIXTURE X 70 CFM = 70 CFM 120 CFM EXHAUST PROVIDED BY INDIVIDUAL INTERMITTENT FAN. MAKE UP AIR BY TRANSFER AIR	

APPLICATION	CFM/SQ.FT.
CORRIDORS	0.06 CFM/SQ.FT.
978 SQ. FT. X 0.06 CFM/SQ.FT. = 59 CFM	

APPLICATION	CFM/SQ.FT.
STORAGE	0.06 CFM/SQ.FT.
286 SQ. FT. X 0.12 CFM/SQ.FT. = 34 CFM	

TOTAL OUTSIDE AIR REQUIRED - 1213 CFM
TOTAL OUTSIDE PROVIDED - 1500 CFM

AHU #2 = 750 CFM PROVIDED
AHU #3 = 750 CFM PROVIDED

GENERAL NOTES - MECHANICAL

1. ALL WORK SHALL BE IN ACCORDANCE WITH THE LATEST EDITION OF THE STATE CODE AND ALL LOCAL AND OTHER APPLICABLE CODES.
2. ANY PERMITS AND INSPECTION FEES SHALL BE SECURED AND PAID FOR BY THE MECHANICAL CONTRACTOR (MC).
3. ALL WORK SHALL BE PERFORMED BY EXPERIENCED AND SKILLED CRAFTSMEN. THE MC SHALL COORDINATE ALL OF HIS WORK WITH THE GENERAL CONTRACTOR (GC) AND OTHER TRADES.
4. THE LOCATION OF ALL DUCT, PIPING AND EQUIPMENT SHALL BE ADJUSTED TO ACCOMMODATE ANTICIPATED OR ENCOUNTERED INTERFERENCES.
5. THESE PLANS ARE DIAGRAMMATIC AND MAY NOT SHOW MINOR DETAILS AND LOCATIONS. FOR DIMENSIONS REFER TO THE ARCHITECTURAL PLANS.
6. THE MC SHALL BE RESPONSIBLE FOR ALL ELECTRICAL STARTERS INTERLOCKS, CONTROL WIRING CONDUIT AND POWER WIRING FROM DISCONNECTS TO HIS EQUIPMENT, USING A LICENSED ELECTRICIAN.
7. THE MC SHALL USE FIRE DAMPERS FOR PROTECTION OF THE OPENING IN ACCORDANCE WITH STATE AND LOCAL CODES IN ALL LOCATIONS WHERE PENETRATIONS OF RATED WALLS AND FLOORS OCCUR. SEE ARCHITECTURAL PLANS FOR RATED WALL AND FLOOR LOCATIONS. PROVIDE ACCESS DOORS AT ALL DAMPER LOCATIONS. LOCATE DOORS FOR EASY ACCESS. THERE ARE NO RATED WALLS PENETRATED IN THIS HVAC UPFIT.
8. INSTALL FLEXIBLE CONNECTORS ON SUPPLY AND RETURN DUCTWORK AHU. ALL MECHANICAL EQUIPMENT SHALL OPERATE FREE OF OBJECTIONAL NOISE AND VIBRATION.
9. INSTALL TURNING VANES IN SUPPLY DUCTS AT ALL ELBOWS AND SPLITTER DAMPERS. PROVIDE BALANCING DAMPERS IN ALL DUCTS WHERE SHOWN OR REQUIRED FOR SYSTEM BALANCING. PROVIDE SPIN IN STARTING COLLARS WITH DAMPERS AT ALL SUPPLY TAKEOFFS.
10. DUCT DIMENSIONS ARE SHOWN INSIDE CLEAR. COORDINATE EXACT SIZE WITH SPACE AVAILABLE DUCT INSULATION SHALL BE 2" FIBERGLASS EXTERIOR DUCT INSULATION WITH FOIL FACING.
11. THERMOSTAT, WIRING AND CONDUIT ARE TO BE FURNISHED BY THE MC. MOUNT THERMOSTAT 48" ABOVE THE FINISHED FLOOR. COORDINATE LOCATION WITH OWNER. PROVIDE AUTO CHANGEOVER THERMOSTAT WITH UNIT OFF POSITION AS MINIMUM. PROVIDE AN EMERGENCY SHUT-OFF SWITCH ABOVE THE THERMOSTAT. PROPERLY LABEL SHUT-OFF SWITCH.
12. THE MC SHALL KEEP THE PREMISES CLEAR OF DEBRIS FROM HIS WORK DURING CONSTRUCTION AND LEAVE THE AREA AND BUILDING CLEAN AT THE COMPLETION OF HIS WORK. HE SHALL ALSO LEAVE CLEAN ALL EXPOSED EQUIPMENT IN HIS CONTRACT.
13. COORDINATE DIFFUSER AND CEILING EXHAUST GRILLE LOCATIONS WITH LIGHTS AND GRID. COORDINATE MOUNTING FRAME WITH CEILING TYPE.
14. THE M.C. SHALL COORDINATE WITH AND PROVIDE EQUIPMENT SPEC. SHEETS TO THE GENERAL AND ELECTRICAL CONTRACTORS FOR REVIEW PRIOR TO ORDERING EQUIPMENT.
15. PROPERLY SUPPORT FLEXIBLE DUCT, MINIMUM 75% DEFORMATION. PROVIDE SHEET METAL ELBOWS AT ALL 90 DEGREE BENDS.
16. ALL DUCT JOINTS SHALL BE SEALED AIRTIGHT WITH FIBER ENPREGNATED MASTIC OR HARDCAST AND TAPE.
17. SUPPORT AHU, EXHAUST FANS, HEAT WHEEL AND ALL DUCTWORK, ETC. FROM STRUCTURE. PIPE STRAPPING WILL NOT BE ALLOWED.

MECHANICAL SYSTEMS AND EQUIPMENT

METHOD OF COMPLIANCE:

Prescriptive [X] Energy Cost Budget [ ]

Thermal Zone 3A

Exterior Design Conditions

winter dry bulb 22 F
summer dry bulb 94 F

Interior Design Conditions

winter dry bulb 72 F
summer dry bulb 75 F
relative humidity 50%

Building Heating Load
109,600 BTU/hr
-79,092 BTU/hr (heat wheel reduction)
39,508 BTU/hr

Building Cooling Load
117,400 BTU/hr
-47,096 BTU/hr (heat wheel reduction)
70,304 BTU/hr

Mechanical Spacing Conditioning System

Unitary - The building is served by (2) 4 ton split system heat pumps with an enerygy recovery ventilator.

Boiler - Not applicable to this project.

Chiller - Not applicable to this project.

Equipment efficiencies

Efficiencies and outputs are listed on equipment schedules - See drawings.

Equipment schedules with motors.

Motors used on this project are included in the efficiency rating of the unit. See drawings for efficiencies.

ENGINEER

ENGINEER
BURKE DESIGN GROUP, PA
CONSULTING ENGINEERS
3305-109 Durham Drive
Raleigh, North Carolina 27603
919.771.1916 fax: 919.779.0826
email: benburke@nc.rr.com
Corp. License # C-2652

NORTH CAROLINA PROFESSIONAL ENGINEER SEAL 22038 BENJAMIN E. BURKE
7/31/14

GENERAL NOTES

KEY PLAN

NO	REVISION	DATE
1	REVISE FOR RE-BID	7-28-2014

JKF
ARCHITECTURE

P.O. BOX 20642 GREENVILLE, NC 27858 PHONE 252-355-1068

NC DOT PROJECT
42229.1.1 (K-5101) US 70 REST AREA RENOVATIONS
NEW BERN, CRAVEN COUNTY, NC

DRAWING TITLE
HVAC SCHEDULES/DETAILS

SCALE	1/4" = 1'-0"
DRAWN	DJH/MCZ
CHECKED	BEB
DATE	01-10-2014
PROJECT NO.	2013-18
DRAWING NO	M1.1

© COPYRIGHT, JKF ARCHITECTURE P.C., JOHN K. FARKAS, AIA

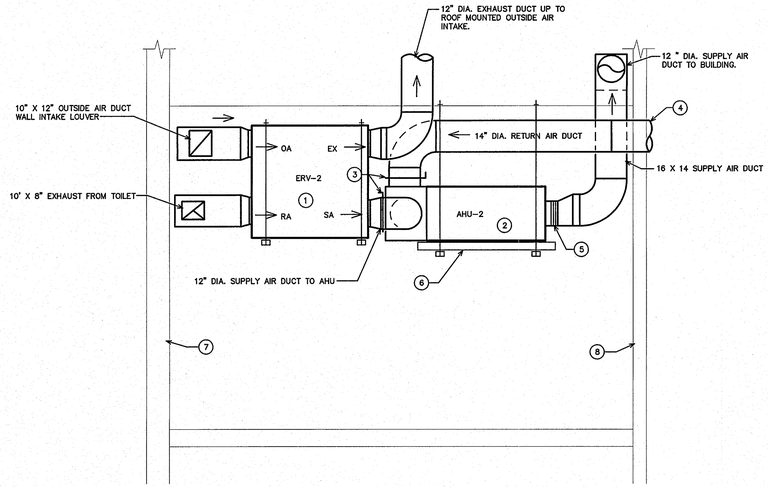

KEY NOTES FOR 2/M1.2

1. ENERGY RECOVERY VENTILATOR SUSPENDED FROM STRUCTURE. PROVIDE ALL MANUFACTURER'S REQUIRED CLEARANCES.
2. AHU SUSPENDED FROM STRUCTURE. PROVIDE ALL MANUFACTURER'S REQUIRED CLEARANCES.
3. MANUAL BALANCING DAMPER WITH LOCKING QUADRANT.
4. 14" DIA. RETURN AIR DUCT TO CEILING MOUNTED RETURN AIR GRILLE IN CORRIDOR.
5. FLEXIBLE CONNECTIONS ON ALL DUCT CONNECTIONS TO EQUIPMENT. (TYPICAL).
6. FULL LENGTH GALVANIZED STEEL DRAIN PAN UNDER AHU. PROVIDE DRAIN PIPE FROM PAN TO EXTERIOR.
7. EXTERIOR WALL.
8. CORRIDOR WALL.

2 / M1.2 TYPICAL MECHANICAL ROOM SECTION
1/4" = 1'-0"

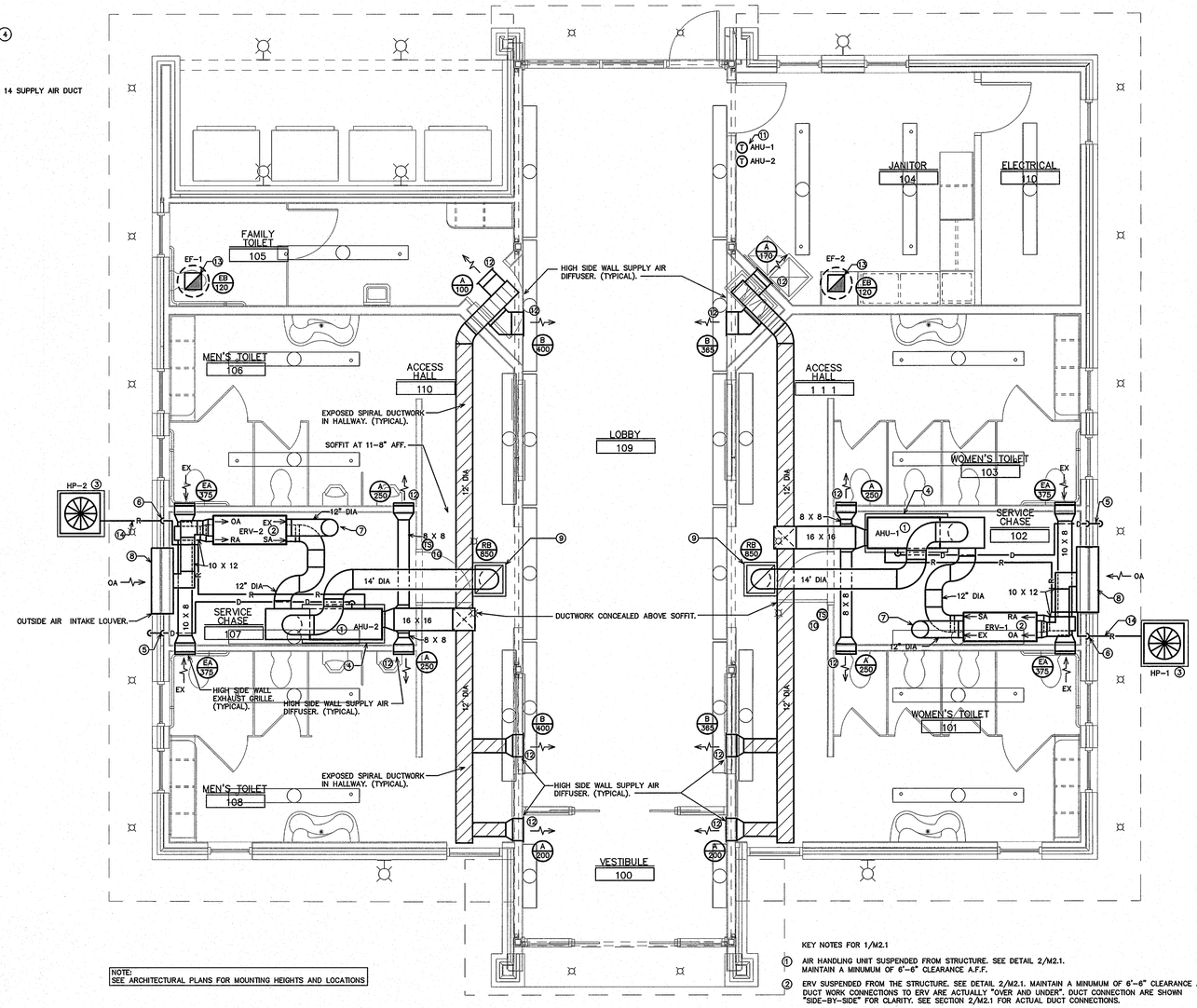

NOTE:
SEE ARCHITECTURAL PLANS FOR MOUNTING HEIGHTS AND LOCATIONS

1 / M1.2 HVAC PLAN
1/4" = 1'-0"

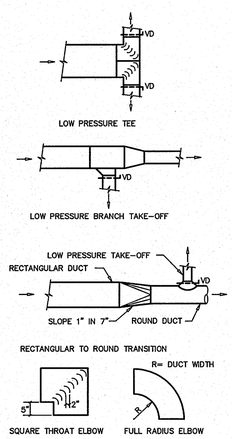

2 / M1.2 DUCT CONSTRUCTION DETAILS
NTS

KEY NOTES FOR 1/M2.1

11. AIR HANDLING UNIT SUSPENDED FROM STRUCTURE. SEE DETAIL 2/M2.1. MAINTAIN A MINUMUM OF 6'-6" CLEARANCE A.F.F.
12. ERV SUSPENDED FROM THE STRUCTURE. SEE DETAIL 2/M2.1. MAINTAIN A MINUMUM OF 6'-6" CLEARANCE A.F.F. DUCT WORK CONNECTIONS TO ERV ARE ACTUALLY "OVER AND UNDER". DUCT CONNECTION ARE SHOWN "SIDE-BY-SIDE" FOR CLARITY. SEE SECTION 2/M2.1 FOR ACTUAL DUCT CONNECTIONS.
3. HEAT PUMP UNIT MOUNTED ON A 4" "POURED IN PLACE" CONCRETE PAD.
4. PROVIDE DRAIN PAN UNDER AHU FOR THE FULL LENGTH. PROVIDE FLOAT SWITCH IN PAN FOR OVERFLOW. WIRE TO SHUT DOWN UNIT.
5. RUN CONDENSATE DRAIN TO THE EXTERIOR. CONCEAL IN EXTERIOR WALL. INSULATE THE ENTIRE LENGTH. TURN DOWN INTO THE PLANTING AREA.
6. RUN THE REFRIGERANT LINES CONCEALED IN THE EXTERIOR WALL. SEAL WALL PENETRATION. PAINT ALL EXPOSED, EXTERIOR INSULATION WITH UV RESISTANT PAINT.
7. RUN EXHAUST DUCT TO ROOF MOUNTED EXHAUST HOOD. HOOD SHALL BE EQUAL TO CARNES MODEL GSAA, SIZE 12.
8. SEE EXTERIOR ELEVATIONS FOR EXACT LOCATION OF INTAKE LOUVER. LOUVER BY GENERAL CONTRACTOR.
9. CEILING MOUNTED RETURN AIR GRILLE.
10. REMOTE TEMPERATURE SENSOR.
11. WALL MOUNTED THERMOSTATS. MOUNT AT 48" AFF.
12. HIGH SIDEWALL MOUNTED SUPPLY AIR DIFFUSER.
13. 8" DIA. EXHAUST DUCT UP TO ROOF MOUNTED EXHAUST FAN. RUN 8" DIA. SPIRAL DUCT DOWN TO 9'-0" AFF AND INSTALL EXHAUST GRILLE ON END OF DUCT. GRILLE SHALL BE LEVEL WITH FLOOR. EXAUST FAN DISCHARGE SHALL BE 10'-0" MIN. FROM ANY OUTSIDE AIR INTAKE.
14. PROVIDE A 14" X 4" CONCRETE PAD FROM UNIT TO BUILDING FOR REFRIG LINES AND ELEC CONDUIT. PROVIDE ALUMINUM COVER. COORDINATE COLOR WITH ARCH/OWNER.

ENGINEER

ENGINEER
BURKE DESIGN GROUP, PA
CONSULTING ENGINEERS
3305-109 Durham Drive
Raleigh, North Carolina 27603
919.771.1916 fax: 919.779.0826
email: benburke@nc.rr.com
Corp. License # C-2652

NORTH CAROLINA PROFESSIONAL SEAL 22038 ENGINEER BENJAMIN E. BURKE
1/27/14

GENERAL NOTES

KEY PLAN

NO	REVISION	DATE

JKF
ARCHITECTURE

P.O. BOX 20662 GREENVILLE, NC 27858 PHONE 252-355-1068

NC DOT PROJECT
42229.1.1 (K-5101) US 70 REST AREA RENOVATIONS
NEW BERN, CRAVEN COUNTY, NC

DRAWING TITLE
HVAC PLAN

SCALE	1/4" = 1'-0"
DRAWN	JME
CHECKED	BEB
DATE	01-10-2014
PROJECT NO.	2013-18
DRAWING NO	M1.2

© COPYRIGHT. JKF ARCHITECTURE P.C. JOHN K. FARKAS, AIA

DIVISION 16 – ELECTRICAL

PART 1 – GENERAL

1.1 DESCRIPTION OF THE WORK

A. Work under this section includes, but is not necessarily limited to, furnishing and installing the following:
   1. Lighting and power distribution system.
   2. Provide lighting fixtures selected by owner with lamps to match.
   3. Wiring devices, boxes, cover plates, etc.
   4. Source of power for all items of equipment.
   5. Grounding.
   6. Other requirements and/or systems where shown.

B. All work shall be complete and items, equipment, etc., shall be electrically connected for proper and correct operation.

C. All work under this contract shall be installed in accordance with the latest edition of the following codes and standards insofar as they apply:
   1. The 2011 National Electrical Code.
   2. The National Electrical Safety Code.
   3. Underwriter's Laboratories, Inc., Standards and approved listings or other approved 3rd party listing agency.
   4. Electrical Testing Labatories standards.
   5. 2012 North Carolina State Building Code.
   6. 2012 North Carolina State Energy Code.

D. The Electrical Contractor shall be licensed in the State of North Carolina and have all local licenses required for the work.

E. Local permits are not required. All work must be inspected by the Office of State Construction state electrical inspector and the Engineer of Record. Provide certificate of inspection and approval from the state electrical inspector prior to the final inspection. the electrical contractor is responsible for contacting the state electrical inspector for all required inspections.

F. All work shall be done by skilled mechanics and shall present a neat, trim, workmanlike condition when complete.

1.2 INTENT

A. The intent of these specifications and the accompanying drawings is to convey as reasonably as possible the requirements for a complete job ready for the building to operate. The Electrical Contractor shall take this into consideration and include in his base bid allowance for contingencies as will allow him to provide minor pieces of equipment and labor not specifically indicated but required for the job to operate properly, at no additional cost to the Owner.

1.3 COORDINATION

A. Coordinate work with other contractors. Notify Architect of apparent conflicts early to expedite construction. If structural damage appears imminent, stop work and notify Architect for a decision before resuming operations.

B. Locations shown are approximate. The drawings do not give exact details as to elevations and locations of various pipes, fittings, ducts, conduit, etc., and do not show all offsets and other installation details which may be required. Coordinate all locations with architect before any rough-in.

1.4 SHOP DRAWINGS

A. Shop drawings shall be submitted for panels and service equipment, lighting, wiring devices, and cover plates. These may consist of the manufacturer's standard catalog or tear sheets and shall have the exact items being offered clearly identified.

PART 2 – PRODUCTS AND MATERIALS

2.1 GENERAL

A. All material shall be new and shall bear the manufacturer's name, trade name, and be third party acceptable to NCDOI listed and labeled where such standard has been established for the particular material. Materials shall be the standard products of manufacturer's regularly engaged in the manufacturer of the required type of equipment and the manufacturer's latest approved design.
   1. Boxes installed in concealed locations shall be set flush with the finished surfaces.
   2. Provide rated boxes in all fire barriers & walls installed per code.

2.2 CONDUCTORS

A. Conductors shall be color coded, sizes #4 and larger may be color taped on the job. Color coding shall comply with 2011 NEC 200.6.

B. Conductors shall be manufactured by Dodge, Southwire or approved equal. Conductors shall meet the latest requirements of NEMA and IPCEA and shall be third party acceptable to NCDOI approved.

C. Metallic sheathed "MC"cable should not be used for this project, without designer authorization. MC cable is allowed for light whips 6'–0" or less and where concealed within existing construction to minimize demolition work. If used, MC cable shall be 1/2" with minimum #12 AWG copper wire and green insulated copper ground.

D. Conductors shall be spliced and taped as follows:
   1. Size #10 and #12, use Ideal "Wing Nuts" or T&B "Piggy" connectors. Connectors shall be rated for 150 degrees C for use in recessed lighting fixtures.
   2. Size #8 and larger shall be solderless screw and screw-clamping type, smoothly covered and shaped with rubber gum type with final cover vinyl plastic electrical tape. In lieu of rubber gum and vinyl plastic type, factory fabricated approved preformed insulating covers may be used. All connectors shall be UL approved.
   3. No split-bolt type connectors may be used.

E. All branch wire and connections shall be copper and sized per National Electric Code.

F. All conductors shall be continuous without splice between junction, outlet, device boxes, etc. No splicing will be permitted in panelboard cabinets, safety switches, etc.

G. All wiring in mechanical spaces shall be plenum rated.

H. Provide GFI protection within 6'–0" of any sink.

I. All multi-wire branch circuits shall comply with 2011 NEC, 210.4(B).

J. All wiring at medical facilities shall comply with 2011 NEC, 517.1.

2.3 PANELBOARDS, SAFETY SWITCHES

A. Panelboards shall comply with NEMA Standard PB 1 – Latest Edition and as manufactured by Square D or ITE–Siemens. All panel boards must have copper buses.

B. Safety switches shall be heavy duty type, size and rating as required for load service. Safety switches shall be fused or unfused as shown and/or as required. Safety switches serving motor loads shall be horsepower rated for load served.

2.4 WIRING DEVICES

A. Wiring devices shall be commercial grade by Bryant, Leviton, or approved equal. With matching cover. Color by Architect.

B. Wiring devices installed under a Kitchen Hood shall have stainless steel covers.

C. Wiring devices installed over counters shall comply with ANSI A117.1.

2.7 CONDUIT

A. PVC conduit will be allowed under slab. Provide rigid turn-ups.

B. All exposed conduit shall be rigid where exposed to the elements, located less than 8'–0" above grade or where exposed to hazardous conditions.

PART 3 – EXECUTION

3.1 CIRCUIT GROUNDING

A. All circuits shall contain an insulated, green, copper grounding conductor, sized in accordance with Table 250–122 of the NEC. Grounding conductors shall be connected to equipment grounding bus in panelboard and securely attached and grounded to the device or enclosure at the other end.

3.2 GROUNDING TYPE CONVENIENCE OUTLETS AND SWITCHES

A. Outlets and switches shall be solidly grounded to equipment grounding system with a green colored insulated conductor. Electrical connections shall be continuous from equipment ground bus in panelboard to the hex nut on the convenience outlet or switch.

3.3 MOTORS

A. All motors shall be connected to conduit system with short length (minimum length 24" and maximum length 36") of flexible liquidtight conduit.

3.4 EQUIPMENT LABELING

A. Provide permanent penolic plastic name plates for all panelboards, safety switches, wiring troughs, etc., for identification of equipment controlled, services, etc. Nameplates shall be securely and permanently attached to equipment with stainless steel screws. Nameplates shall include the name of the equipment and where it is fed from.

B. All switch plates, receptacle plates and outlet covers shall be labeled with machine printed vinyl labels identifying the circuit(s) within.

C. All empty conduit runs shall be identified and indicated where they terminate.

D. Provide typewritten directory in each panelboard to clearly identify each circuit, service, etc.

3.5 JUNCTION AND/OR PULL BOXES

A. Boxes shall be installed where necessary to avoid excessive runs and/or too many bends between outlets.

3.6 PULL WIRE

A. Leave pull wire in each empty conduit run.

3.7 GROUNDING

A. All grounding shall be in accordance with Article 250 of the NEC. In addition, the following requirements shall be met:
   1. Grounding conductors shall be installed as to permit the shortest and most direct path from equipment to ground. All connections to grounding conductors shall be accessible.
   2. Equipment ground continuity shall be maintained through flexible metal conduit.
   3. All wiring devices equipped with grounding connection shall be solidly grounded to ground system with grounding conductors.
   4. The frame of all lighting fixtures shall be securely grounded to the equipment ground system with grounding conductors.
   5. All equipment enclosures, and non–current–carrying metallic parts of electrical equipment, raceway systems, etc., shall be effectively and adequately bonded to ground.
   6. All equipment enclosures, and non–current–carrying metallic parts of electrical equipment, raceway systems, etc., shall be effectively and adequately bonded to ground.

3.8 ELECTRICAL WORK IN CONNECTION WITH OTHER WORK

A. The trade(s) furnishing equipment will provide disconnect switches, motor starters, and make final equipment connections. ELECTRICAL CONTRACTOR will make line side connections to disconnect switches or motor starters.

3.9 CLEAN UP

A. During construction, keep the site clean of debris. Upon completion, and before final inspection, clean up the premises to remove all evidence of work. In addition upon completion of construction leave equipment clean.

3.10 GUARANTEE

A. Guarantee all materials and labor included in the electrical work for a period of one year from date of final acceptance by the Owner. Any part or parts of the work or equipment which prove to be defective during the guarantee period shall be replaced at no additional cost to the Owner.

ELECTRICAL NOTES

1 ALL ELECTRICAL WORK SHALL BE IN ACCORDANCE WITH THE NATIONAL ELECTRICAL CODE AND ALL LOCAL CODES HAVING JURISDICTION.

2 ALL BRANCH CIRCUIT CONDUCTORS TO BE COPPER (SERVICE CONDUCTORS MAY BE ALUMINUM WITH SAME AMPACITY AS COPPER CONDUCTORS. RE–SIZE CONDUCTERS AND CONDUIT PER NEC.)

3 ALL CIRCUITS TO BE 2 #12, 1 #12 GND IN 1/2" EMT CONDUIT AS A MINIMUM. PROVIDE WIRING FOR LARGER CIRCUITS AS REQUIRED BY NEC. RIGID CONDUIT IS REQUIRED WHERE EXPOSED BELOW 8'–0" A.F.F.

4 ALL EMPTY CONDUIT RUNS IN EXCESS OF 10 FEET SHALL BE PROVIDED WITH A PULL WIRE OR FISH TAPE/CORD.

5 CONTRACTOR SHALL VERIFY THAT ALL DOOR SWINGS ARE CORRECT BEFORE INSTALLING LIGHT SWITCH OUTLETS.

6 ALL BRANCH CIRCUIT CONDUCTORS FROM THE PANEL TO THE FIRST OUTLET SHALL BE INCREASED TO THE NEXT LARGER SIZE WHERE THE LENGTH OF THE HOME RUN EXCEEDS 120 FEET ON 120V AND 208V CIRCUITS.

7 THE CORRECT NUMBER OF WIRES MAY NOT BE INDICATED FOR ALL CIRCUITS, ONLY THOSE WHERE CLARIFICATION IS NECESSARY. THE ELECTICAL CONTRACTOR SHALL PROVIDE ALL WIRES NECESSARY FOR THE PROPER FUNCTION OF THE SYSTEM WHETHER INDICATED ON DRAWINGS OR NOT.

8 THE CONTRACTOR SHALL BE RESPONSIBLE FOR CORRECTLY PHASING THE CIRCUITS IN THE PANELBOARDS.

9 THE ELECTRICAL CONTRACTOR SHALL VERIFY THE TYPE OF CEILING SYSTEM WITH THE GENERAL CONTRACTOR TO INSURE THAT ALL LIGHTING FIXTURES ARE COMPATIBLE WITH THE CEILING SYSTEM BEING INSTALLED. LIGHTING FIXTURES SHOULD NOT BE ORDERED UNTIL TYPE OF CEILING HAS BEEN VERIFIED.

10 ELECTRICAL REQUIREMENTS INDICATED ON DRAWINGS MAY DIFFER FROM ACTUAL EQUIPMENT FURNISHED. IF FURNISHED EQUIPMENT DIFFERS FROM RATINGS ON DRAWINGS CONTRACTOR SHALL NOTIFY ARCHITECT/ENGINEER FOR APPROPRIATE ACTION TO BE TAKEN.

11 IT SHALL BE THE RESPONSIBILITY OF THE ELECTRICAL CONTRACTOR TO COORDINATE EXACT BREAKER REQUIREMENTS FOR ALL EQUIPMENT PRIOR TO ORDERING PANEL. ADJUST BREAKER AND WIRE SIZES AS REQUIRED.

12 ELECTRICAL CONTRACTOR SHALL PROVIDE ALL DISCONNECTS FOR MECHANICAL AND PLUMBING EQUIPMENT. DISCONNECTS SHALL BE PER THE MANUFACTURES RECOMMENDATIONS AND FUSED PER NAME PLATE. PROVIDE NEMA 3R ENCLOSURES ON EXTERIOR. COORDINATE FUSE SIZES.

13 THE EC SHALL MEET WITH THE ARCHITECT AND TENANT PRIOR TO INSTALLING OUTLET BOXES TO VERIFY LOCATIONS AND MOUNTING HEIGHTS OF RECEPTACLES AND TELEPHONE OUTLETS.

ELECTRICAL LEGEND

A	LINEAR FLUORESCENT LIGHT FIXTURE: LETTER DENOTES TYPE OF LIGHT FIXTURE (REFER TO LIGHTING PLAN AND FIXTURE SCHEDULE).
WP/GFI	DUPLEX RECEPTACLE – 120V; MOUNT 18" TO CENTER AFF UNLESS NOTED OTHERWISE; 'WP' INDICATES WEATHER PROOF, 'GFI' INDICATES GROUND FAULT CURRENT INTERRUPT PROTECTED.
	QUADRAPLEX RECEPTACLE – 120V
S	LIGHT SWITCH
S_M	LIGHT SWITCH WITH INTEGRAL INFRARED MOTION SENSOR FOR AUTOMATIC SHUT–OFF WITH UP TO 2 HOUR ADJUSTABLE DELAY.
S	MOTOR RATED SWITCH
J	JUNCTION BOX
	SINGLE–POLE HOMERUN TO PANELBOARD
	TWO–POLE OR 3–POLE HOMERUN TO PANELBOARD
	EMERGENCY LIGHT
EXIT	EXIT LIGHT
EXIT	COMBINATION EXIT/EMERGENCY LIGHT
	BRANCH CIRCUIT WIRING
	SWITCH LEG
	GROUND CONNECTION
PANEL A	DISTRIBUTION PANELBOARD
	DISCONNECTING MEANS AS REQUIRED BY CODE
S_K	KEY OPERATED LIGHT SWITCH

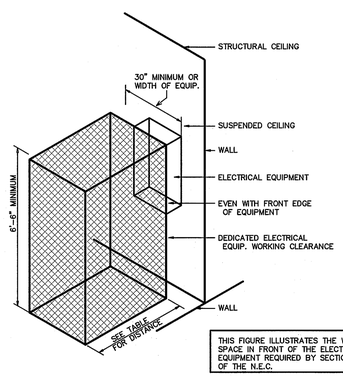

THIS FIGURE ILLUSTRATES THE WORKING SPACE IN FRONT OF THE ELECTRICAL EQUIPMENT REQUIRED BY SECTION 110.26 OF THE N.E.C.

ELECTRICAL EQUIPMENT WORKING CLEARANCE PER ARTICLE 110.26 OF N.E.C.

WORKING CLEARANCES			
VOLTAGE TO GROUND NOMINAL	MIN. CLEAR DISTANCE IN FEET		
	CONDITION: 1	2	3
0–150	3	3	3
151–600	3	3–1/2	4

WHERE THE CONDITIONS ARE AS FOLLOWS:

1 EXPOSED LIVE PARTS ON ONE SIDE OF THE WORKING SPACE AND NO LIVE OR GROUNDED PARTS ON THE OTHER SIDE OF THE WORKING SPACE, OR EXPOSED LIVE PARTS ON BOTH SIDES OF THE WORKING SPACE THAT ARE EFFECTIVELY GUARDED BY INSULATING MATERIALS.

2 EXPOSED LIVE PARTS ON ONE SIDE OF THE WORKING SPACE AND GROUNDED PARTS ON THE OTHER SIDE OF THE WORKING SPACE, CONCRETE, BRICK OR TILE WALLS SHALL BE CONSIDERED AS GROUNDED.

3 EXPOSED LIVE PARTS ON BOTH SIDES OF THE WORK SPACE.

1 / E1.1 ELECTRICAL CLEARANCES
NTS

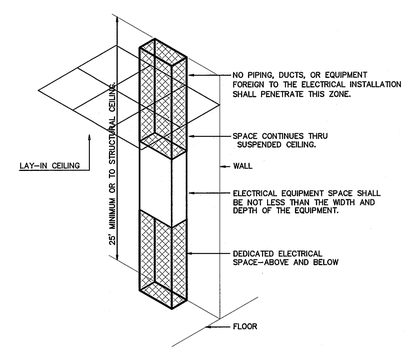

ELECTRICAL EQUIPMENT DEDICATED SPACE PER ARTICLE 110.26.F.1 OF N.E.C.

2 / E1.1 DEDICATED SPACE
NTS

ENGINEER

ENGINEER
BURKE DESIGN GROUP, PA
CONSULTING ENGINEERS
3305-109 Durham Drive
Raleigh, North Carolina 27603
919.771.1916 fax: 919.779.0826
email: benburke@nc.rr.com
Corp. License # C-2652

NORTH CAROLINA PROFESSIONAL SEAL 12035 ENGINEER BENJAMIN E. BURKE
7/31/14

GENERAL NOTES

KEY PLAN

NO	REVISION	DATE
1	REVISE FOR RE–BID	7–28–2014

JKF
ARCHITECTURE

P.O. BOX 20662 GREENVILLE, NC 27858 PHONE 252-355-1068

NC DOT PROJECT
42229.1.1 (K-5101) US 70 REST AREA RENOVATIONS
NEW BERN, CRAVEN COUNTY, NC

DRAWING TITLE
ELECTRICAL DETAILS

SCALE	1/4" = 1'-0"
DRAWN	DJH/MCZ
CHECKED	BEB
DATE	01-10-2014
PROJECT NO.	2013-18
DRAWING NO	E1.1

© COPYRIGHT, JKF ARCHITECTURE PC, JOHN K. FARKAS, AIA

Craven E2

LIGHTING SCHEDULE *

MARK	MANUFACTURER	CATALOG NO.	VOLT.	LAMPS NO.	LAMPS TYPE	LAMPS W	BALLAST TYPE	W/ FIXTURE	REMARKS
A1	FINELITE	S17-LED-ACF-SF-8'-HO-4000K-SC-120V	120	–	LED	–	–	73.6	8' WALL MOUNT LINEAR LED LUMINAIRE
A2	FINELITE	S17-LED-ACF-SF-4'-HO-4000K-SC-120V	120	–	LED	–	–	36.8	4' WALL MOUNT LINEAR LED LUMINAIRE
A3	FINELITE	S16-LED-ID-DCO-8'-2E-HO-4000K-SC-120V-FA-FE-C4	120	–	LED	–	–	74.8	8' SUSPENDED LINEAR LED LUMINAIRE
A4	FINELITE	S16-LED-ID-DCO-4'-2E-HO-4000K-SC-120V-FA-FE-C4	120	–	LED	–	–	37.4	4' SUSPENDED LINEAR LED LUMINAIRE
B1	ARCHITECTURAL AREA	UCM-FLR-T2-32LED-4K-700-DBZ-COP-WMA12	120	–	LED	–	–	75	GOOSENECK WALL SCONCE
C1	PRESCOLITE	LF4LED-4LFLED740K	120	–	LED	–	–	33	4" RECESSED CAN
C1E	PRESCOLITE	LF4LEDEMR-4LFLED740K	120	–	LED	–	–	33	4" RECESSED CAN, EMERGENCY BATTERY
EXIT	COMPASS	CCR	120	–	LED	–	–	–	COMBINATION EMERGENCY/EXIT LIGHT
	COMPASS	CU2	120	2	LED	1	–	2	EMERGENCY LIGHT

* OR APPROVED EQUAL. PROVIDE CUT SHEETS FOR OWNER APPROVAL PRIOR TO ORDERING FIXTURES. CATALOG NUMBERS ARE FOR REFERENCE ONLY, ACTUAL NUMBERS MAY VARY.

Craven E2

ELECTRICAL SYSTEMS AND EQUIPMENT

METHOD OF COMPLIANCE

PRESCRIPTIVE ___X___ PERFORMANCE_____ ENERGY COST BUDGET_____

Provide a standard riser diagram which indicates designated points for check metering
Provide a standard panel schedule description which identifies different enduse loads.

Lighting schedule:

lamp type required in fixture
number of lamps in fixture
ballast type used in fixture
number of ballasts in fixture
total wattage in fixture — See Light Fixture Schedule
total interior wattage specified vs. allowed 1892 VA / 2152 VA

Equipment schedules with motors (not used for mechanical systems) NA

motor horsepower	NA
number of phases	NA
minimum efficiency	NA
motor type	NA
# of poles	NA

DESIGNER STATEMENT

I hereby certify that the design of this building complies with the electrical systems, services systems, and equipment requirements of the 2012 North Carolina State Building Code, Energy Edition.

INTERIOR LIGHTING LOAD CALCULATIONS

PROJECT Craven County Rest Area

AREA (sf)		
1350	Restroom	
660	Corridor/Transition	
620	Electrical/Mechanical	
2630	TOTAL	

SPECIFIED	FIXTURE	WATTS PER	# INTERIOR FIXTURES	
	A1	73.6	14	1030.4
	A2	36.8	2	73.6
	A3	36	12	432
	A4	37.4	6	224.4
	C1	33	4	132
	TOTAL (w)			1892.4 SPECIFIED

ADDITIONAL (w) 0 EXPLAIN

ALLOWED (w/sf)		
0.84	Restroom	
0.65	Corridor/Transition	
0.95	Electrical/Mechanical	
TOTAL (w)		2152 ALLOWED
		260 REMAINING

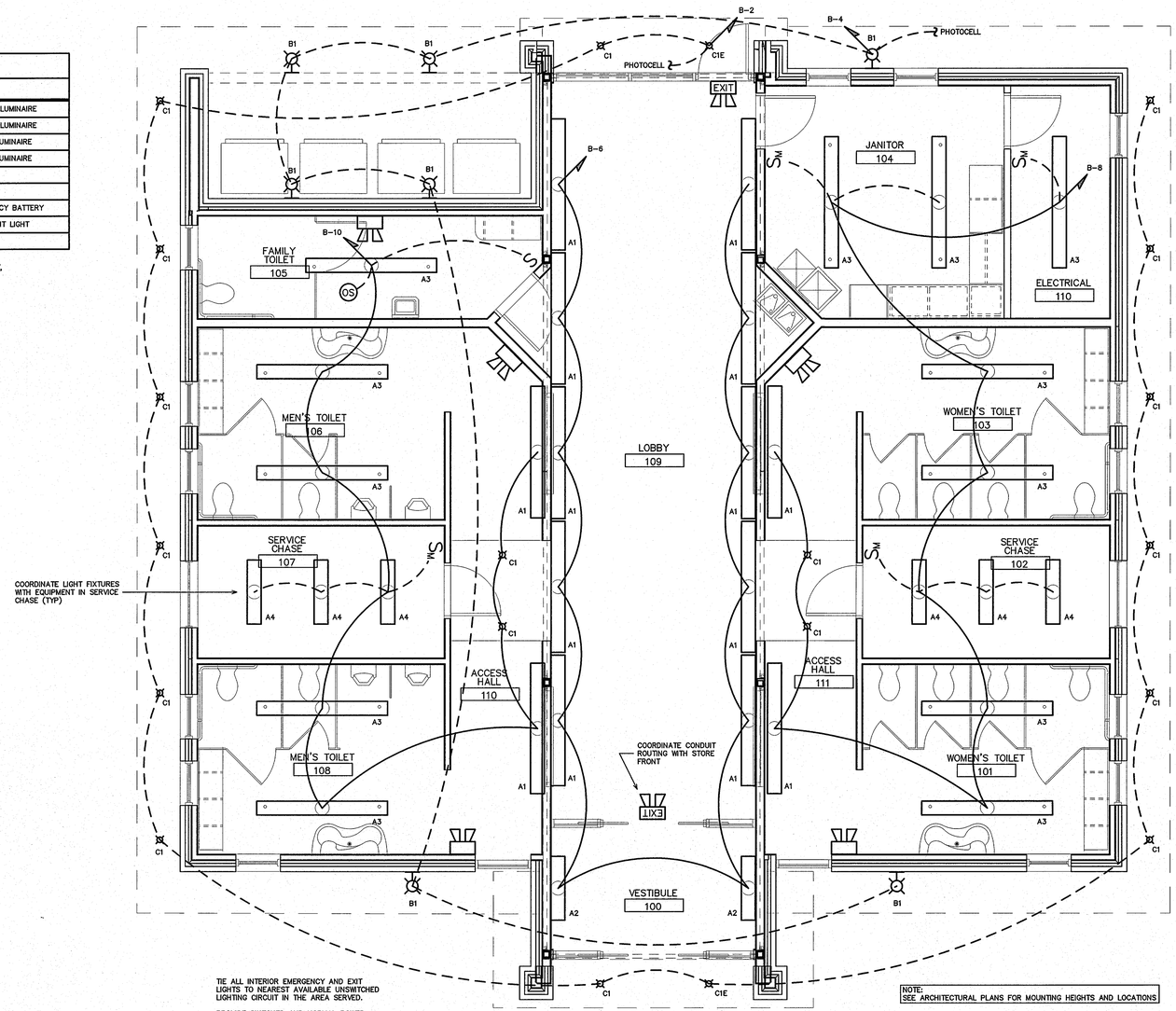

1 / E1.2 LIGHTING PLAN
SCALE: 1/4" = 1'-0"

ENGINEER

ENGINEER
BURKE DESIGN GROUP, PA
CONSULTING ENGINEERS
3305-109 Durham Drive
Raleigh, North Carolina 27603
919.771.1916 fax: 919.779.0826
email: benburke@nc.rr.com
Corp. License # C-2652

NORTH CAROLINA PROFESSIONAL SEAL 22038 ENGINEER BENJAMIN E. BURKE
11/27/13

GENERAL NOTES

KEY PLAN

NO	REVISION	DATE

JKF ARCHITECTURE

P.O. BOX 20662 GREENVILLE, NC 27858 PHONE 252-355-1068

NC DOT PROJECT
42229.1.1 (K-5101) US 70 REST AREA RENOVATIONS
NEW BERN, CRAVEN COUNTY, NC

DRAWING TITLE: LIGHTING PLAN

SCALE	1/4" = 1'-0"
DRAWN	DJH/MCZ
CHECKED	BEB
DATE	01-10-2014
PROJECT NO.	2013-18
DRAWING NO	E1.2

© COPYRIGHT, JKF ARCHITECTURE PC, JOHN K. FARKAS, AIA

RISER WIRING SCHEDULE

1. 400A: 4–#600MCM IN 3 1/2" PVC CONDUIT
2. #1/0 CU GND TO BUILDING STEEL, FOUNDATION STEEL AND METALLIC WATER MAIN AND #6 CU GND TO 10' X 5/8" DRIVEN GROUND ROD
3. 400A: 4–#600MCM, 1–#3 CU GND, IN 4" PVC CONDUIT
4. 100A: 4–#3, 1–#8 CU GND, IN 1 1/4" PVC CONDUIT

NOTE:
UNLESS OTHERWISE NOTED ALL OTHER CIRCUITS ARE 20A, 120V. PROVIDE 2–#12, 1–#12 CU GND, IN 1/2" CONDUIT.

SEE EQUIPMENT WIRING SCHEDULE FOR ADDITIONAL WIRE SIZES.

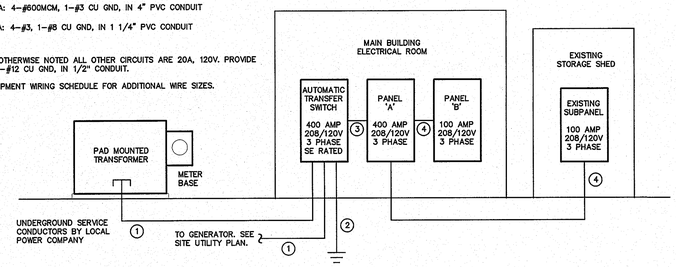

2 / E1.3 RISER DIAGRAM
NOT TO SCALE

Craven E3

EQUIPMENT WIRING SCHEDULE

EQUIPMENT	MCA	MOCP	VOLTS	PH	WIRE SIZE
AHU–1 & –2	53.8A	60A	208V	1	2–#6, 1–#10 GND IN 3/4" CONDUIT
ERV–1 & –2	18.45A	25A	208V	1	2–#10, 1–#10 GND IN 1/2" CONDUIT
HP–1 & –2	28.5A	40A	208V	1	2–#8, 1–#10 GND IN 3/4" CONDUIT
SWH	---	30A	208V	1	2–#10, 1–#10 GND IN 1/2" CONDUIT

NOTE:
THE ELECTRICAL CONTRACTOR SHALL VERIFY ALL EQUIPMENT ELECTRICAL REQUIREMENTS PRIOR TO ROUGH–IN AND RELEASING GEAR. ADJUST BREAKER, WIRE SIZES, ETC. AS REQUIRED.

Craven E3

NEW PANEL– 'A'

FED FROM: ATS

MAKE: CUTLER HAMMER
TYPE: PRL1A
OR APPROVED EQUAL

RATING: 208/120V 3 PHASE 4 WIRE
MOUNTING: FLUSH
MINIMUM AIC: VERIFY

400A MAIN CIRCUIT BREAKER
EQUIPMENT GROUND BUS ☒YES ☐NO
SERVICE ENTRY RATED ☐YES ☒NO

LOAD SERVICE	CKT BRKR	WATTS PER PHASE A	B	C	CKT NO	NEUTRAL A B C	CKT NO	WATTS PER PHASE A	B	C	CKT BRKR	LOAD SERVICE
AHU–1	60A	4468			1		2	7787			100A	PANEL 'B'
MOTOR 3/4 HP, HEAT 7.5 KW			4468		3		4		9403			–
AHU–2	60A			4468	5		6			6870		–
MOTOR 3/4 HP, HEAT 7.5 KW		4468			7		8	5000			100A	SITE LIGHTING
HP–1	40A		2392		9		10		5000			–
COMP 21.8 RLA, FAN 1.2 FLA				2392	11		12			5000		–
HP–2	40A	2392			13		14	2500			100A	STORAGE SHED
COMP 21.8 RLA, FAN 1.2 FLA			2392		15		16		2500			–
ERV–1	25A			1535	17		18			2500		–
14.76 FLA		1535			19		20	400			15A	CIRC PUMP: 1/12 HP
ERV–2	25A		1535		21		22		500		15A	SOLAR THERMAL PUMPS/CONTROLS
14.76 FLA				1535	23		24			---		SPACE
SWH	30A	2250			25		26	---				SPACE
4.5 KW			2250		27		28		---			SPACE
EWH	20A			1650	29		30			---		SPACE
NOTES / SUB–TOTALS 'B'		15113	13037	11580								

400A	BUS	15687	17403	14370	SUB–TOTALS 'A'	TOTAL CONNECTED LOAD
400A	LUGS	15113	13037	11580	SUB–TOTALS 'B'	
400A	FEED	30800	30440	25950	GRAND TOTAL	
#600MCM	SIZE	257A	254A	216A	AMPS/PHASE	

NEC ALLOWABLE DEMAND FACTORS

1. DEMAND FACTORS PER NEC 220
2. LARGEST OF: NEC TABLE 220.12 OR CONNECTED LOAD
3. NEC TABLE 220.56
4. NEC 220.51
5. NEC 220.43A, 200 VA/LINEAR FT
6. NON–COINCIDENT LOADS, LARGEST OF THE TWO LOADS IS COUNTED

DIVERSIFIED LOAD SUMMARY

LOAD TYPE	DEMAND FACTOR(1)	A	B	C	TOTAL DIVERSIFIED LOAD
GENERAL LIGHTING (2)	125%	2659	2658	2658	7975
TRACK LIGHTING	125%	---	---	---	---
GENERAL USE RECEPTACLES ≤10KVA@100%	1260	---	720	---	1980
GENERAL USE RECEPTACLES >10KVA@50%	---	---	---	---	---
MOTORS AND EQUIPMENT (LARGEST)	125%	2834	2834	2834	8502
MOTORS AND EQUIPMENT (ALL OTHERS)	100%	11146	15948	11753	38847
WATER HEATERS	125%	2813	2813	2063	7689
KITCHEN EQUIPMENT (3)	100%	---	---	---	---
FIX. ELEC. SPACE HEAT. (4)	100%	7500	3750	3750	15000
SHOW WINDOW LIGHTS (5)	125%	---	---	---	---
SIGN	125%	---	---	---	---
MISC (SITE LIGHTING)	125%	6250	6250	6250	18750
PHASE (TOTAL VA)		34482	34253	30028	98743
TOTAL AMPS		287A	285A	250A	VOLT AMPS / VOLTS X 1.732 = 274A TOTAL AMPS

(2) 3190 SQ.FT. X 2.0 W/SQ.FT. X 125% = 7975 VA

Craven E3

NEW PANEL– 'B'

FED FROM: PANEL 'A'

MAKE: CUTLER HAMMER
TYPE: PRL1A
OR APPROVED EQUAL

RATING: 208/120V 3 PHASE 4 WIRE
MOUNTING: SURFACE
MINIMUM AIC: VERIFY

MLO MAIN CIRCUIT BREAKER
EQUIPMENT GROUND BUS ☒YES ☐NO
SERVICE ENTRY RATED ☐YES ☒NO

LOAD SERVICE	CKT BRKR	WATTS PER PHASE A	B	C	CKT NO	NEUTRAL A B C	CKT NO	WATTS PER PHASE A	B	C	CKT BRKR	LOAD SERVICE
VENDING	20A	1000			1		2	528			20A	LTS: EXTERIOR
VENDING			1000		3		4		525			LTS: EXTERIOR
VENDING				1000	5		6			810		LTS: 100, 109
VENDING		1000			7		8	849				LTS: 101–104, 111
EWC			888		9		10		700			LTS: 105–108, 110
RECEPTACLES				720	11		12			600		AUTOMATIC DOOR
RECEPTACLES		1260			13		14	600				AUTOMATIC DOOR
FLUSH VALVE CONTROLS			1440		15		16		2300			HAND DRYER
FLUSH VALVE CONTROLS				1440	17		18			2300		HAND DRYER
EF–1: 1/20 HP	15A	250			19		20	2300				HAND DRYER
EF–2: 1/20 HP	15A		250		21		22		2300			HAND DRYER
SPACE				---	23		24			---		SPACE
SPACE		---			25		26	---				SPACE
SPACE			---		27		28		---			SPACE
SPACE				---	29		30			---		SPACE
NOTES / SUB–TOTALS 'B'		3510	3578	3160								

100A	BUS	4277	5825	3710	SUB–TOTALS 'A'	TOTAL CONNECTED LOAD
100A	LUGS	3510	3578	3160	SUB–TOTALS 'B'	
100A	FEED	7787	9403	6870	GRAND TOTAL	
#3	SIZE	65A	78A	57A	AMPS/PHASE	

NEC ALLOWABLE DEMAND FACTORS

1. DEMAND FACTORS PER NEC 220
2. LARGEST OF: NEC TABLE 220.12 OR CONNECTED LOAD
3. NEC TABLE 220.56
4. NEC 220.51
5. NEC 220.43A, 200 VA/LINEAR FT
6. NON–COINCIDENT LOADS, LARGEST OF THE TWO LOADS IS COUNTED

DIVERSIFIED LOAD SUMMARY

LOAD TYPE	DEMAND FACTOR(1)	A	B	C	TOTAL DIVERSIFIED LOAD
GENERAL LIGHTING (2)	125%	1722	1532	1013	4267
TRACK LIGHTING	125%	---	---	---	---
GENERAL USE RECEPTACLES ≤10KVA@100%	1260	---	720	---	1980
GENERAL USE RECEPTACLES >10KVA@50%	---	---	---	---	---
MOTORS AND EQUIPMENT (LARGEST)	125%	1250	1250	1250	3750
MOTORS AND EQUIPMENT (ALL OTHERS)	100%	4150	7178	4340	15668
WATER HEATERS	125%	---	---	---	---
KITCHEN EQUIPMENT (3)	100%	---	---	---	---
FIX. ELEC. SPACE HEAT. (4)	100%	---	---	---	---
SHOW WINDOW LIGHTS (5)	125%	---	---	---	---
SIGN	125%	---	---	---	---
MISC	100%	---	---	---	---
PHASE (TOTAL VA)		8382	9980	7323	25665
TOTAL AMPS		70A	83A	61A	VOLT AMPS / VOLTS X 1.732 = 71A TOTAL AMPS

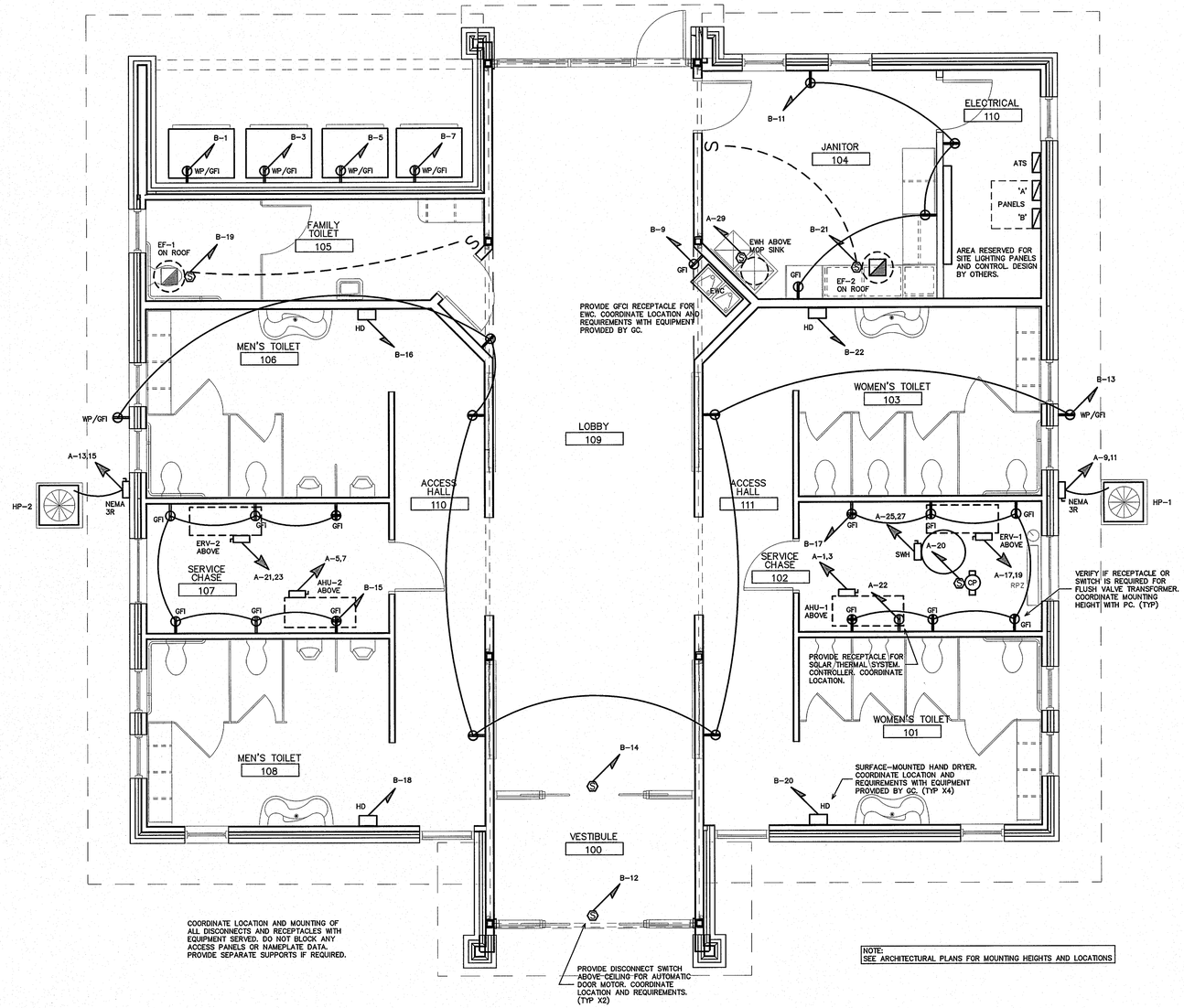

NOTE:
SEE ARCHITECTURAL PLANS FOR MOUNTING HEIGHTS AND LOCATIONS

1 / E1.3 POWER PLAN
SCALE: 1/4" = 1'-0"

ENGINEER

ENGINEER
BURKE DESIGN GROUP, PA
CONSULTING ENGINEERS
3305-109 Durham Drive
Raleigh, North Carolina 27603
919.771.1916 fax: 919.779.0826
email: benburke@nc.rr.com
Corp. License # C-2652

NORTH CAROLINA PROFESSIONAL ENGINEER SEAL 22038 BENJAMIN E. BURKE
1/29/14

GENERAL NOTES

KEY PLAN

NO	REVISION	DATE

JKF
ARCHITECTURE

P.O. BOX 20662 GREENVILLE, NC 27858 PHONE 252-355-1068

NC DOT PROJECT
42229.1.1 (K-5101) US 70 REST AREA RENOVATIONS
NEW BERN, CRAVEN COUNTY, NC

DRAWING TITLE: POWER PLAN

SCALE	1/4" = 1'-0"
DRAWN	DJH/MCZ
CHECKED	BEB
DATE	01-10-2014
PROJECT NO.	2013-18
DRAWING NO	E1.3

© COPYRIGHT, JKF ARCHITECTURE P.C. JOHN K. FARKAS, AIA

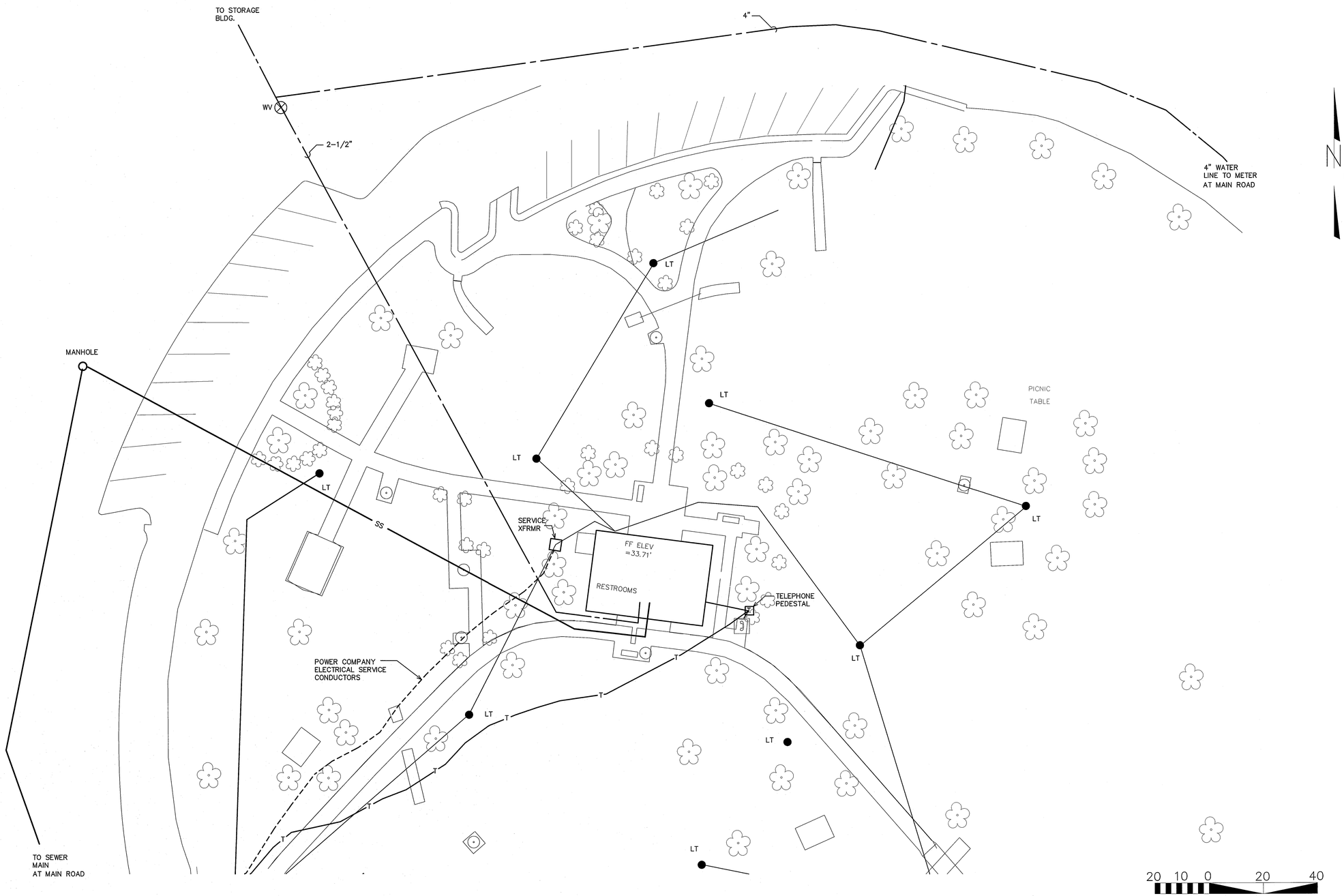

1 / U1.1 EXISTING UTILITY PLAN
1" = 20'-0"

ENGINEER

ENGINEER
BURKE DESIGN GROUP, PA
CONSULTING ENGINEERS
3305-109 Durham Drive
Raleigh, North Carolina 27603
919.771.1916 fax: 919.779.0826
email: benburke@nc.rr.com
Corp. License # C-2652

NORTH CAROLINA PROFESSIONAL SEAL 22038 ENGINEER BENJAMIN E. BURKE

7/31/14

GENERAL NOTES

KEY PLAN

NO	REVISION	DATE
1	REVISE FOR RE-BID	7-28-2014

JKF
ARCHITECTURE

P.O. BOX 20642 GREENVILLE, NC 27858 PHONE 252-355-1068

NC DOT PROJECT
42229.1.1 (K-5101) US 70 REST AREA RENOVATIONS
NEW BERN, CRAVEN COUNTY, NC

DRAWING TITLE
EXISTING UTILITIES

SCALE	NTS
DRAWN	JME
CHECKED	BEB
DATE	03-22-2014
PROJECT NO.	2013-18
DRAWING NO	U1.1

© COPYRIGHT. JKF ARCHITECTURE PC. JOHN K. FARKAS, AIA

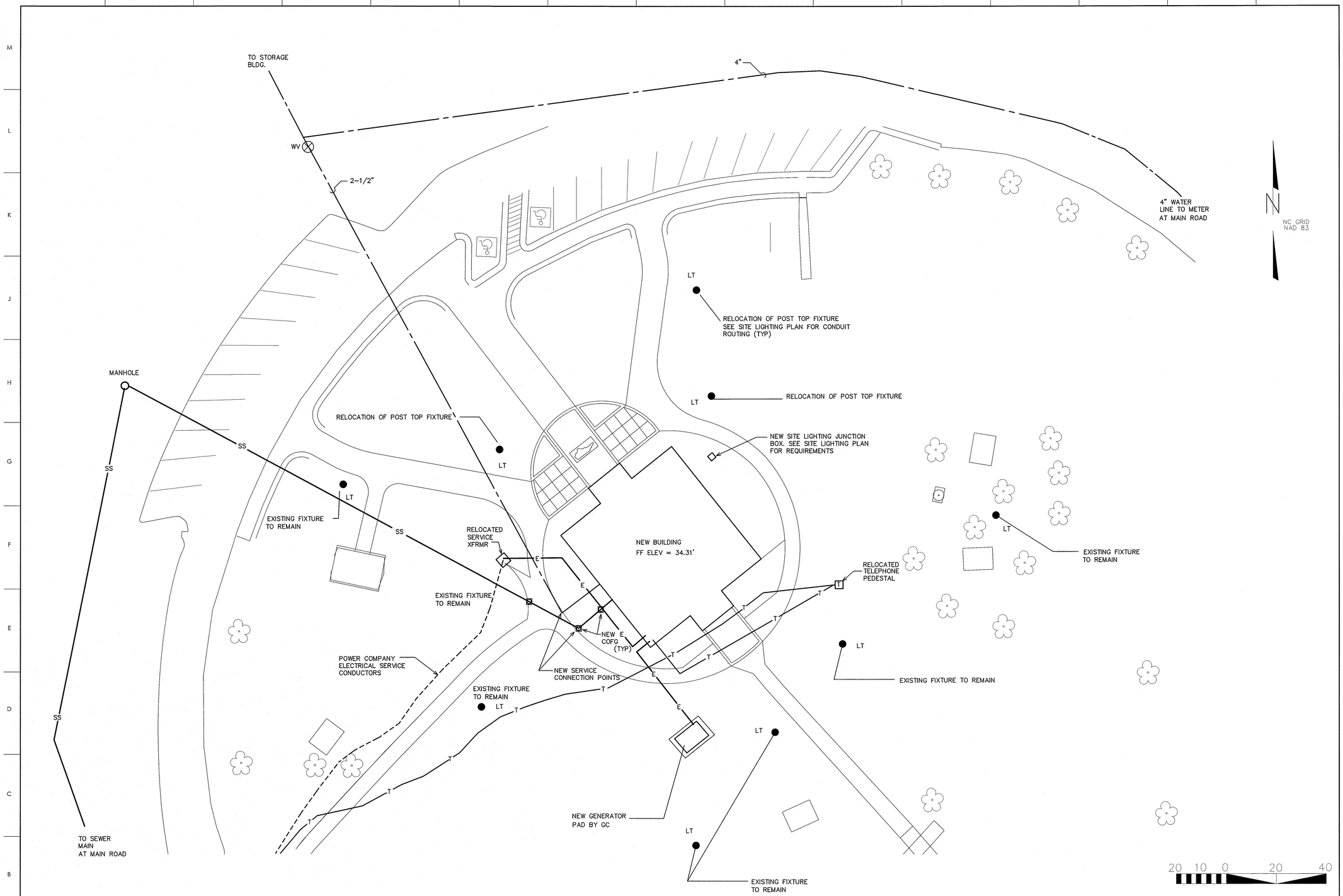

1 / U1.2 UTILITY PLAN
1" = 20'-0"

ENGINEER

ENGINEER
BURKE DESIGN GROUP, PA
CONSULTING ENGINEERS
3305-109 Durham Drive
Raleigh, North Carolina 27603
919.771.1916 fax: 919.779.0826
email: benburke@nc.rr.com
Corp. License # C-2652

NORTH CAROLINA PROFESSIONAL SEAL 22038 ENGINEER BENJAMIN E. BURKE
4/7/14

GENERAL NOTES

KEY PLAN

NO	REVISION	DATE

JKF
ARCHITECTURE

P.O. BOX 20662 GREENVILLE, NC 27858 PHONE 252-355-1068

NC DOT PROJECT
42229.1.1 (K-5101) US 70 REST AREA RENOVATIONS
NEW BERN, CRAVEN COUNTY, NC

DRAWING TITLE
UTILITY PLAN

SCALE	1/4" = 1'-0"
DRAWN	JME
CHECKED	BEB
DATE	01-10-2014
PROJECT NO.	2013-18
DRAWING NO	U1.2

© COPYRIGHT, JKF ARCHITECTURE P.C. JOHN K. FARKAS, AIA

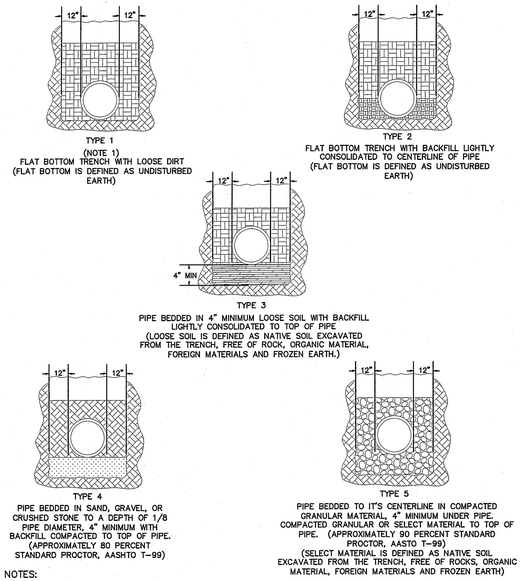

NOTES:

1. FOR NORMAL PIPE SIZES 14 INCH AND LARGER, CONSIDERATION SHOULD BE GIVEN TO THE USE OF LAYING CONDITIONS OTHER THAN TYPE 1.
2. CONSIDERATION OF THE PIPE-ZONE EMBEDMENT CONDITIONS INCLUDED IN THIS FIGURE MAY BE INFLUENCE BY FACTORS OTHER THAN PIPE STRENGTH. FOR ADDITIONAL INFORMATION ON PIPE BEDDING AND BACKFILL, SEE ANSI/AWWA C600.

1 U1.3 PIPE BURIAL DETAILS

SCALE: NOT TO SCALE

UTILITY SEPARATION NOTES

1) LATERAL SEPARATION OF SEWERS OR WATER MAINS. WATER MAINS SHALL BE LAID AT LEAST TEN (10) FEET LATERALLY FROM EXISTING OR PROPOSED SEWERS, UNLESS LOCAL CONDITIONS OR BARRIERS PREVENT A TEN (10) FOOT LATERAL SEPARATION--IN WHICH CASE:
   A) THE WATER MAIN IS LAID IN A SEPARATE TRENCH, WITH THE ELEVATION ON THE BOTTOM OF THE WATER MAIN AT LEAST EIGHTEEN (18) INCHES ABOVE THE TOP OF SEWER; OR
   B) THE WATER MAIN IS LAID IN THE SAME TRENCH AS THE SEWER WITH THE WATER MAIN LOCATED AT ONE SIDE ON A BENCH OF UNDISTURBED EARTH, AND WITH THE ELEVATION OF THE BOTTOM OF THE WATER MAIN AT LEAST EIGHTEEN (18) INCHES ABOVE THE TOP OF SEWER.

2) CROSSING A WATER MAIN OVER A SEWER. WHENEVER NECESSARY FOR A WATER MAIN TO CROSS OVER A SEWER, THE WATER MAIN SHALL BE LAID AT SUCH AN ELEVATION THAT THE BOTTOM OF THE WATER MAIN IS AT LEAST EIGHTEEN (18) INCHES ABOVE THE TOP OF THE SEWER, UNLESS LOCAL CONDITIONS OR BARRIERS PREVENT AN EIGHTEEN (18) INCH SEPARATION--IN WHICH CASE, BOTH THE WATER MAIN AND SEWER SHALL BE CONSTRUCTED OF FERROUS MATERIALS AND WITH JOINTS THAT ARE EQUIVALENT TO WATER MAIN STANDARDS FOR A DISTANCE OF TEN (10) FEET ON EACH SIDE OF THE CROSSING.

3) CROSSING A WATER MAIN UNDER A SEWER. WHENEVER IT IS NECESSARY FOR A WATER MAIN TO CROSS UNDER A SEWER, BOTH THE WATER MAIN AND THE SEWER SHALL BE CONSTRUCTED OF FERROUS MATERIALS AND WITH JOINTS EQUIVALENT TO WATER MAIN STANDARDS FOR A DISTANCE OF THE (10) FEET ON EACH SIDE OF THE POINT(S) OF CROSSING. A SECTION OF WATER MAIN PIPE SHALL BE CENTERED AT THE POINT OF CROSSING.

4) SEWER AND STORMWATER PIPES TO HAVE A MINIMUM OF 24" SEPARATION FROM BOTTOM OF STORMWATER PIPE AND TOP OF SEWER PIPE.

NOTE:
ALL SITE UTILITY WORK ON SHEETS U-1.1 AND U-1.2 WILL BE PAID FOR UNDER THEIR RESPECTIVE LUMP SUM PAY ITEMS FOR PLUMBING INSTALLATION REST AREA SERVICE BUILDING, HVAC INSTALLATION REST AREA SERVICE BUILDING, AND ELECTRICAL INSTALLATION REST AREA SERVICE BUILDING. NO SEPARATE LINE ITEMS ARE INCLUDED IN THIS PROJECT FOR SITE UTILITY WORK. COORDINATE WORK WITH ALL TRADES .

NOTE: CONCRETE VALVE PAD REQUIRED ON ALL VALVES.

APPROVED METHOD FOR EXTENSION OF VALVE BOX

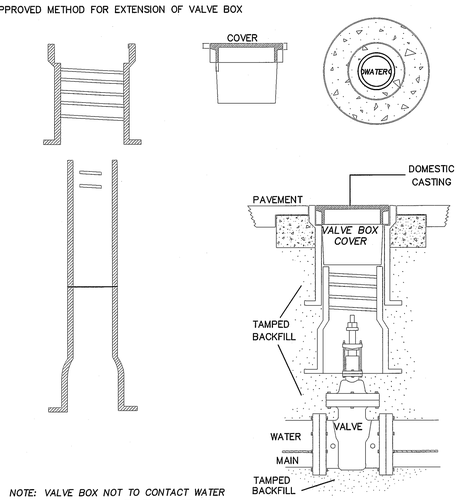

NOTE: VALVE BOX NOT TO CONTACT WATER MAIN NOR VALVE. ALL TRAFFIC CASTINGS MUST BE CLASS 35 OR GREATER DOMESTICALLY CAST. VALVE BOX SHALL BE THREADED TYPE.

4 U1.3 WATER VALVE DETAILS

SCALE: NOT TO SCALE

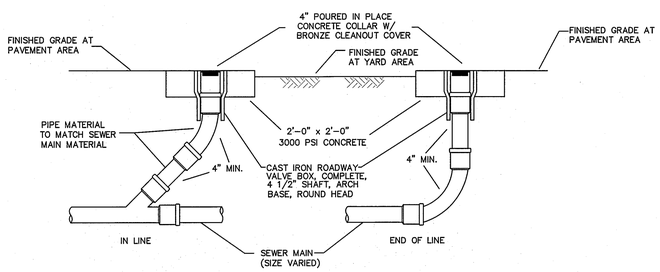

2 U1.3 GRAVITY SEWER CLEANOUT

SCALE: NOT TO SCALE

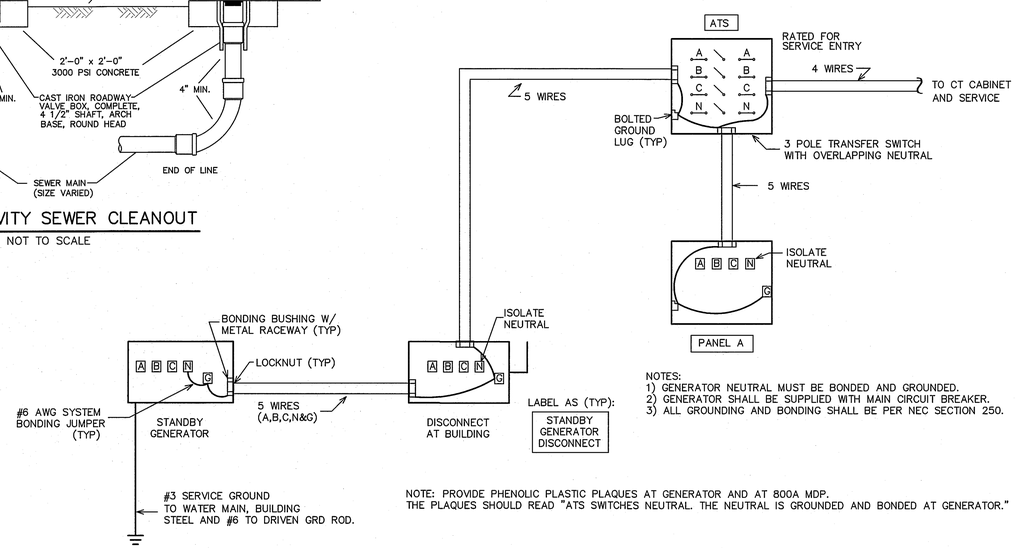

NOTES:
1) GENERATOR NEUTRAL MUST BE BONDED AND GROUNDED.
2) GENERATOR SHALL BE SUPPLIED WITH MAIN CIRCUIT BREAKER.
3) ALL GROUNDING AND BONDING SHALL BE PER NEC SECTION 250.

NOTE: PROVIDE PHENOLIC PLASTIC PLAQUES AT GENERATOR AND AT 800A MDP. THE PLAQUES SHOULD READ "ATS SWITCHES NEUTRAL. THE NEUTRAL IS GROUNDED AND BONDED AT GENERATOR."

3 U1.3 GENERATOR BONDING DETAIL

SCALE: NOT TO SCALE

GENERATOR SCHEDULE (STAND-BY)

100 KW DIESEL FUELED STANDBY GENERATOR-

PROVIDE A "KOHLER" MODEL 100REOZJB GENERATOR WITH SERVICE ENTRY RATED AUTOMATIC TRANSFER SWITCH. THE GENERATOR SHALL BE CAPABLE OF RUNNING ON DIESEL FUEL WITH A 12 HOUR MIN RUN CAPACITY. PROVIDE ALL ACCESSORIES AS REQUIRED FOR A COMPLETE OPERATING SYSTEM. THE ENGINE SHALL HAVE A MINIMUM OF 125 HP AT 1800 RPM WITH AND ENCLOSED MUFFLER. THE DELIVERY VOLTAGE SHALL BE 208/120 VOLT, 3 PHASE. PROVIDE 10A DUAL RATE BATTERY CHARGER, AUTOMATIC VOLTAGE REGULATOR, AUTOMATIC LOW OIL PRESSURE AND HIGH TEMPERATURE SHUTDOWN. THE AUTOMATIC TRANSFER SWITCH SHALL TRANSFER FROM THE UTILITY AUTOMATICALLY. PROVIDE A SERVICE RATED DISCONNECTING MEANS WITH OVERCURRENT PROTECTION AT THE GENERATOR LOCATION. PROPERLY GROUND THE GENERATOR AND SERVICE EQUIPMENT PER THE NEC. PROVIDE INITIAL START UP AND OWNER TRAINING. THE DIESEL FUEL TANK SHALL BE A MINIMUM OF 150 GALLONS. PROVIDE A DIGITAL CONTROL PANEL, UNIT VIBRATION ISOLATION, AND A WEATHER PROTECTIVE ENCLOSURE. PROVIDE A LOAD TEST, START-UP AND OWNER TRAINING BY THE GENERATOR MANUFACTURER'S FACTORY TRAINED REPRESENTATIVE.

PROVIDE AN ADJUSTABLE 7-DAY/24-HOUR EXERCISE TIMER.
PROVIDE A FULL TANK OF FUEL AT COMPLETION OF ALL REQUIRED TESTS.

OR APPROVED EQUAL BY CATERPILLAR OR GENERAC

ENGINEER

ENGINEER
BURKE DESIGN GROUP, PA
CONSULTING ENGINEERS
3305-109 Durham Drive
Raleigh, North Carolina 27603
919.771.1916 fax: 919.779.0826
email: benburke@nc.rr.com
Corp. License # C-2652

NORTH CAROLINA PROFESSIONAL ENGINEER SEAL 22038 BENJAMIN E. BURKE
4/7/14

GENERAL NOTES

KEY PLAN

NO	REVISION	DATE

JKF
ARCHITECTURE

P.O. BOX 20662 GREENVILLE, NC 27858 PHONE 252-355-1068

NC DOT PROJECT
42229.1.1 (K-5101) US 70 REST AREA RENOVATIONS
NEW BERN, CRAVEN COUNTY, NC

DRAWING TITLE
UTILITY DETAILS

SCALE	1/4" = 1'-0"
DRAWN	JME
CHECKED	BEB
DATE	03-22-2014
PROJECT NO.	2013-18
DRAWING NO	U1.3

© COPYRIGHT, JKF ARCHITECTURE PC, JOHN K. FARKAS, AIA