DocuSign Envelope ID: 7013626D-DE5C-4780-B3FF-796E39060156

PROJECT REFERENCE NO.	SHEET NO.
R-5816	Sig. 1.2

EDI MODEL 2010ECL-NC CONFLICT MONITOR PROGRAMMING DETAIL

(remove jumpers and set switches as shown)

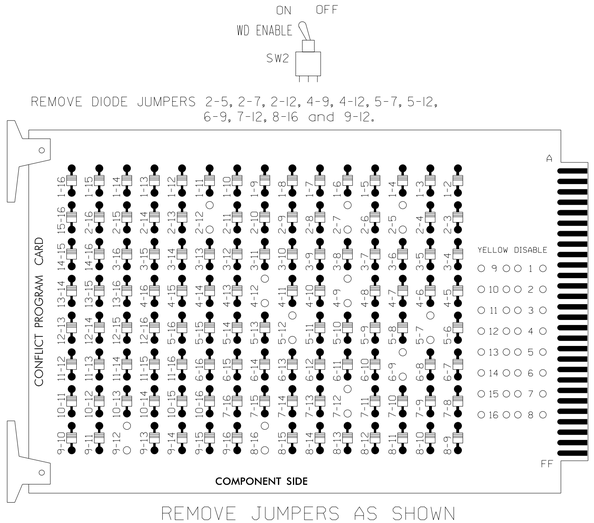

REMOVE JUMPERS AS SHOWN

NOTES:

1. Card is provided with all diode jumpers in place. Removal of any jumper allows its channels to run concurrently.
2. Make sure jumpers SEL2-SEL5 are present on the monitor board.

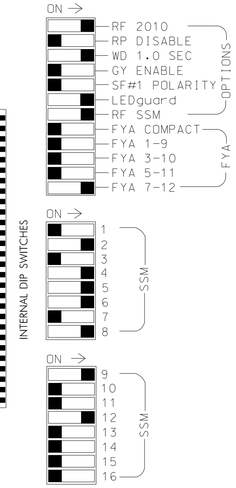

■ = DENOTES POSITION OF SWITCH

NOTES

1. To prevent "flash-conflict" problems, insert red flash program blocks for all unused vehicle load switches in the output file. The installer shall verify that signal heads flash in accordance with the Signal Plans.
2. To prevent red failures on unused monitor channels, see Red Monitor Board Programming Detail this sheet.
3. Program phases 2 and 5 for Dual Entry.
4. Enable Simultaneous Gap-Out for all phases.
5. Program phases 2 and 5 for First Phases.
6. Program phase 8 for 'STARTUP PED CALL'.
7. Program overlap 1 as Wag Overlap.
8. The cabinet and controller are part of the NC 58 Atlantic Beach Closed Loop System.

EQUIPMENT INFORMATION

CONTROLLER.....2070
CABINET.....332 /W/ AUX
SOFTWARE.....ECONOLITE OASIS
CABINET MOUNT.....BASE
OUTPUT FILE POSITIONS...18 WITH AUX. OUTPUT FILE
LOAD SWITCHES USED.....S2,S4,S5,S6,S7,S8, S8P,S9,S13.
PHASES USED.....2,4,5,6,8,8 PED.
OVERLAP "A".....4+6
OVERLAP "B".....NOT USED
OVERLAP "C".....NOT USED
OVERLAP "D".....4+5
OVERLAP "E".....NOT USED
OVERLAP "F".....5

SIGNAL HEAD HOOK-UP CHART

LOAD SWITCH NO.	S1	S2		S2P	S3	S4			S4P	S5	S6		S6P	S7	S8		S8P	S9	S10	S11	S12	S13	S14
PHASE	1	2		2 PED	3	4			4 PED	5	6		6 PED	OLF	8		8 PED	OLA	OLB	SPARE	OLC	OLD	SPARE
SIGNAL HEAD NO.	NU	21	22	NU	NU	41	42	43	NU	51	61	62	NU	45 ★	81	82	P81, P82	63,64	NU	NU	NU	45 ★	NU
RED		128	128				101	101			134	134			107	107		A121				A101	
YELLOW		129	129				102	102			135	135		✳	108	108							
GREEN		130	130				103	103			136	136			109	109							
RED ARROW						101				131													
YELLOW ARROW						102				132								A122				A102	
FLASHING YELLOW ARROW																						A103	
GREEN ARROW		130				103	103			133	136			124	109			A123					
✋																	110						
🚶																	112						

NU = Not Used

✳ Denotes install load resistor. See load resistor installation detail this sheet.

★ See pictorial of head wiring in detail below.

INPUT FILE POSITION LAYOUT

(front view)

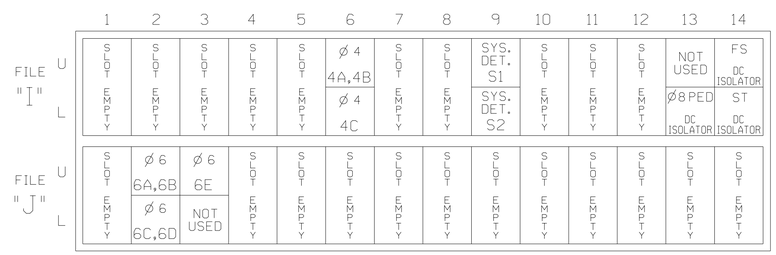

EX.: 1A, 2A, ETC. = LOOP NO.'S

FS = FLASH SENSE
ST = STOP TIME

INPUT FILE CONNECTION & PROGRAMMING CHART

LOOP NO.	LOOP TERMINAL	INPUT FILE POS.	PIN NO.	INPUT ASSIGNMENT NO.	DETECTOR NO.	NEMA PHASE	CALL	EXTEND	FULL TIME DELAY	STRETCH TIME	DELAY TIME
4A,4B	TB4-9,10	I6U	41	3	4	4	Y	Y			
4C	TB4-11,12	I6L	45	7	14	4	Y	Y			10
6A,6B	TB3-5,6	J2U	40	2	6	6	Y	Y			
6C,6D	TB3-7,8	J2L	44	6	16	6	Y	Y			10
6E	TB3-9,10	J3U	64	26	36	6	Y	Y			15
✳ S1	TB6-9,10	I9U	60	22	11	SYS					
✳ S2	TB6-11,12	I9L	62	24	13	SYS					
PED PUSH BUTTONS											
P81,P82	TB8-8,9	I13L	70	32	PED 8	8 PED					

NOTE: INSTALL DC ISOLATORS IN INPUT FILE SLOT 113.

✳ System detector only. Remove the vehicle phase assigned to this detector in the default programming.

INPUT FILE POSITION LEGEND: J2L
FILE J
SLOT 2
LOWER

COUNTDOWN PEDESTRIAN SIGNAL OPERATION

Countdown Ped Signals are required to display timing only during Ped Clearance Interval. Consult Ped Signal Module user's manual for instructions on selecting this feature.

4 SECTION FYA PPLT SIGNAL WIRING DETAIL

(wire signal heads as shown)

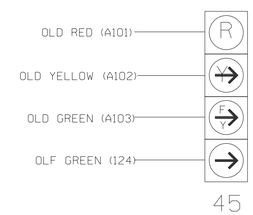

NOTE

1. The sequence display for these signals require special logic programming. See sheet 2 for programming instructions.

RED MONITOR BOARD PROGRAMMING

(position jumpers as shown below)

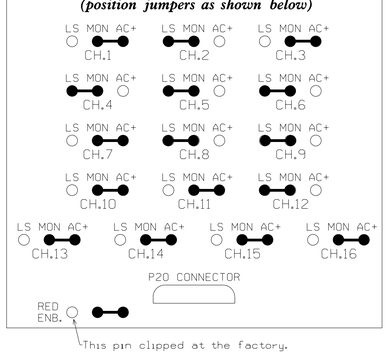

SPECIAL DETECTOR NOTE

Install a multizone microwave detection system for vehicle detection for zones 2A, 5A, and 8A. Perform installation according to manufacturer's directions and NCDOT engineer-approved mounting locations to accomplish the detection schemes shown on the Signal Design Plans.

LOAD RESISTOR INSTALLATION DETAIL

(install resistors as shown below)

ACCEPTABLE VALUES

VALUE (ohms)	WATTAGE
1.5K - 1.9K	25W (min)
2.0K - 3.0K	10W (min)

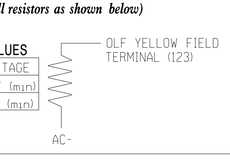

Project #: 38564.16

THIS ELECTRICAL DETAIL IS FOR
THE SIGNAL DESIGN: 02-0256
DESIGNED: July 2022
SEALED: 7/26/2022
REVISED:

VHB Engineering NC, P.C. (C-3705)
940 Main Campus Drive, Suite 500
Raleigh, NC 27606
919.829.0328

Electrical Detail - Sheet 1 of 3

DOCUMENT NOT CONSIDERED FINAL UNLESS ALL SIGNATURES COMPLETED

ELECTRICAL AND PROGRAMMING DETAILS FOR:

Transportation Mobility and Safety Division
ENGINEERING BUREAU OF TRANSPORTATION
Signal Design Section
750 N.Greenfield Pkwy,Garner,NC 27529

NC 58 (Fort Macon Road)
at
SR 1182 (Atlantic Beach Cswy)

Division 2 Carteret County Atlantic Beach

PLAN DATE: July 2022	REVIEWED BY:
PREPARED BY: J. Townsend	REVIEWED BY:

REVISIONS	INIT.	DATE

SEAL

NORTH CAROLINA PROFESSIONAL SEAL 031533 ENGINEER JOHN G. TOWNSEND

DocuSigned by: John G. Townsend
7/26/2022

SIGNATURE DATE

SIG. INVENTORY NO. 02-0256

7/26/2022
R:\Carteret\Designs\Signals\02025611_sm_ele.dgn
User:jtownsend