DocuSign Envelope ID: F5C24010-0B9B-4DA2-84DF-BB5975A24300

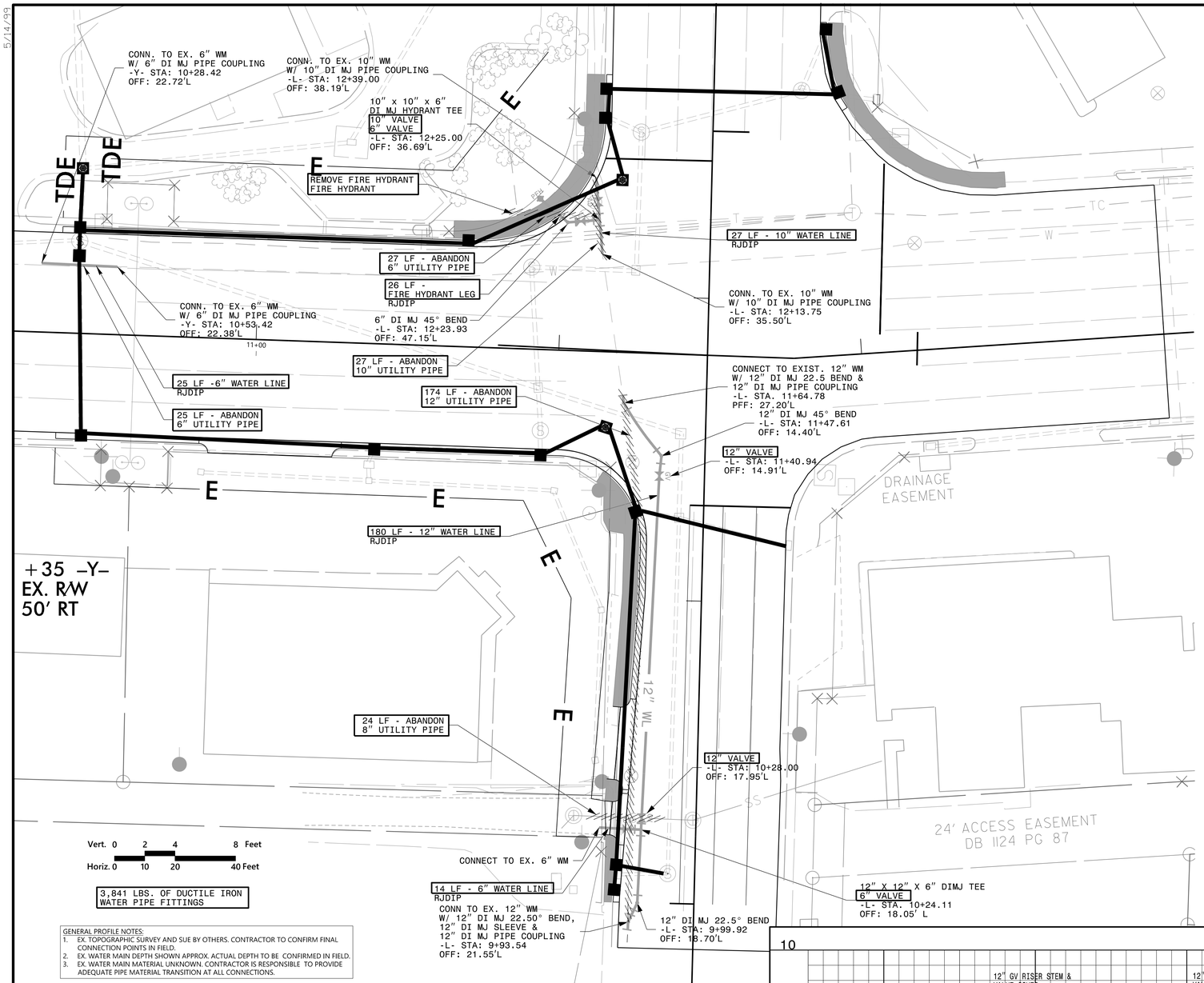

3,841 LBS. OF DUCTILE IRON WATER PIPE FITTINGS

GENERAL PROFILE NOTES:
1. EX. TOPOGRAPHIC SURVEY AND SUE BY OTHERS. CONTRACTOR TO CONFIRM FINAL CONNECTION POINTS IN FIELD.
2. EX. WATER MAIN DEPTH SHOWN APPROX. ACTUAL DEPTH TO BE CONFIRMED IN FIELD.
3. EX. WATER MAIN MATERIAL UNKNOWN. CONTRACTOR IS RESPONSIBLE TO PROVIDE ADEQUATE PIPE MATERIAL TRANSITION AT ALL CONNECTIONS.

LEGEND

- EX. WATERLINE TO REMAIN
- EX. WATERLINE TO BE REMOVED
- 10" WL — PROPOSED RJDIP WATERLINE
- EX. SEWER LINE TO BE REMOVED

NOTES

1. ALL WORK ASSOCIATED WITH THE INSTALLATION OF WATERLINE SHALL BE COMPLETED AS PER THESE SPECIAL PROVISIONS AND NCDOT STANDARD SPECIFICATIONS FOR ROADS AND STRUCTURES, LATEST EDITION.
2. ALL WATER LINES SHALL BE INSTALLED WITH A MINIMUM OF 36 INCHES OF COVER.
3. WATER SHALL BE AT LEAST 10 FEET LATERALLY FROM EXISTING OR PROPOSED SEWERS. WHERE LOCAL CONDITIONS PREVENT A SEPARATION OF 10 FEET, THE WATER MAIN MAY BE LAID CLOSER, PROVIDED THAT THE ELEVATION OF THE BOTTOM OF THE WATER MAIN IS AT LEAST 18 INCHES ABOVE THE TOP OF THE SEWER WITH A HORIZONTAL SEPARATION OF AT LEAST 3 FEET.
4. WATER SHALL MAINTAIN A MINIMUM 24" HORIZONTAL AND 18" VERTICAL SEPARATION BETWEEN THE WATER MAIN AND STORM SEWER OR OTHER DRY UTILITIES.
5. WHEN A PROPOSED WATER MAIN CROSSES UNDER A PROPOSED OR EXISTING SEWER, CONSTRUCT BOTH THE WATER MAIN AND THE SEWER OF FERROUS MATERIALS WITH JOINTS THAT ARE EQUIVALENT TO WATER MAIN STANDARDS FOR A DISTANCE OF 10 FEET ON EACH SIDE OF THE POINT OF CROSSING. CENTER THE SECTION OF WATER PIPE AT THE POINT OF CROSSING.
6. VERIFY ALL ILLUSTRATED UTILITY CROSSINGS PRIOR TO CONSTRUCTION AND NOTIFY THE ENGINEER IF CONFLICTS ARE ENCOUNTERED.
7. CONTRACTOR SHALL COORDINATE UTILITY RELOCATION OR ABANDONMENT WITH LOCAL UTILITY COMPANIES AS REQUIRED.
8. ALL NEW WATER MAINS SHALL BE RESTRAINED JOINT DUCTILE IRON PIPE WITH CEMENT MORTAR LINING AND ZINC COATING. LINING AND COATING SHALL BE SEALED WITH TOPCOAT.
9. ALL VALVES USED ON THIS PROJECT SHALL BE GATE VALVES. BUTTERFLY VALVES ARE NOT APPROVED FOR USE.
10. ALL CONNECTIONS TO EXISTING WATER MAINS TO BE MADE WITH THRUST COLLAR AS PER THE DETAIL OF THESE PLANS.
11. CONTRACTOR SHALL STAY A MINIMUM OF 7.5' AWAY FROM THE EXISTING TRAFFIC SIGNAL POLE FOUNDATIONS.

PROJECT REFERENCE NO.	SHEET NO.
R-5816	UC-2

UTILITIES ENGINEER

DocuSigned by: JOHN M. KAMPMANN, P.E. NORTH CAROLINA PROFESSIONAL SEAL 14101 ENGINEER JOHN M. KAMPMANN 5/14/2022

DOCUMENT NOT CONSIDERED FINAL UNLESS ALL SIGNATURES COMPLETED

Prepared by

vhb

VHB Engineering NC, P.C. (C-3705)
940 Main Campus Drive, Suite 500
Raleigh, NC 27606

FIRE HYDRANT LEG

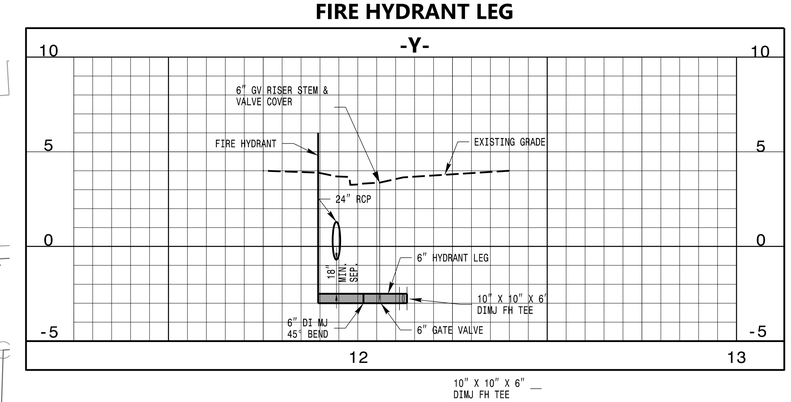

12" WATER MAIN RELOCATION

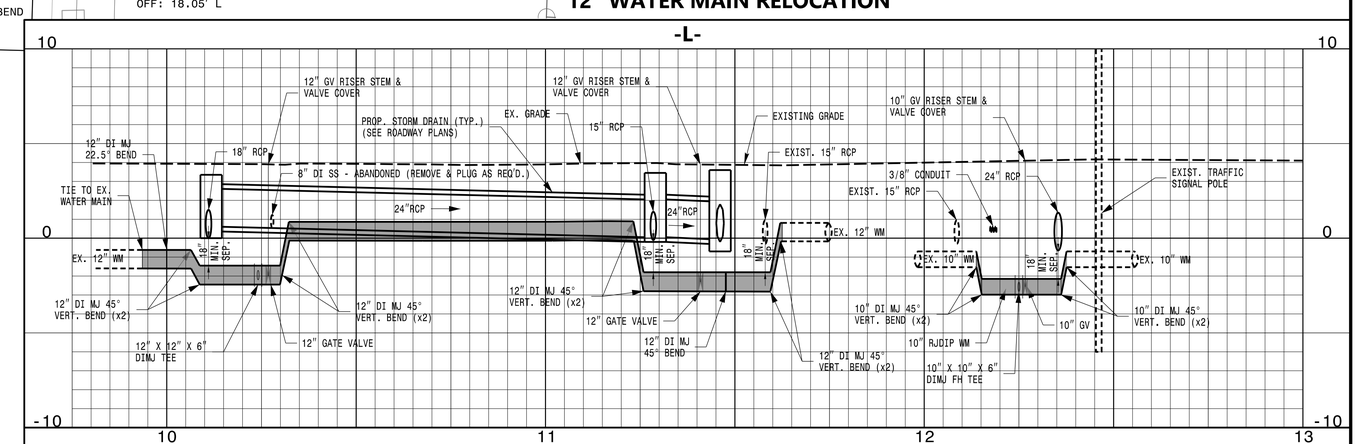

6" WATER MAIN RELOCATION

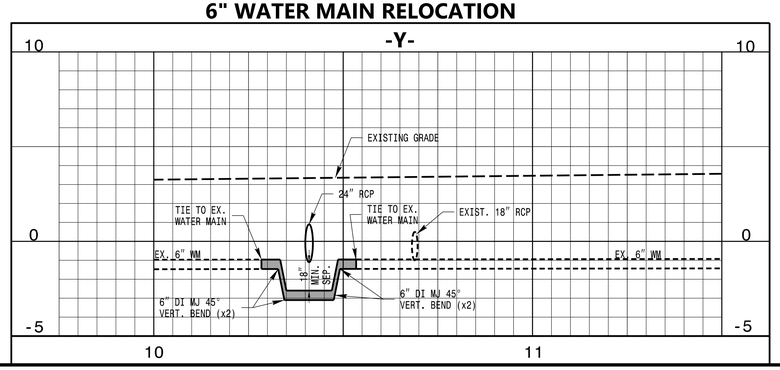

R:\Utilities\Projects\R-5816_utl_psh01.dgn 8:34:26 AM