09/08/99

# CONTRACT: DB00320 PROJECT: DF15002.2074805

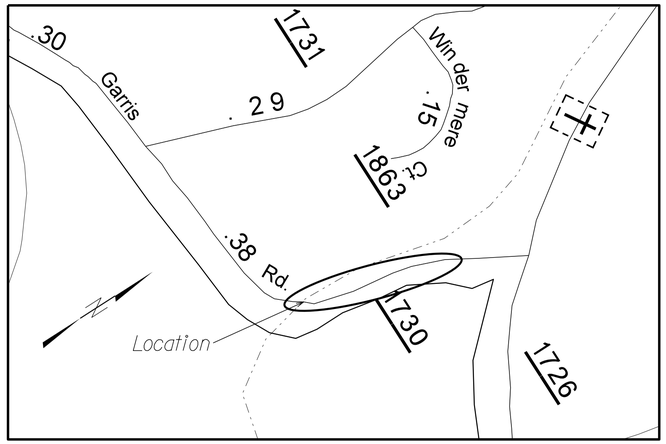


See Sheet 1-A For Index of Sheets

STATE OF NORTH CAROLINA
DIVISION OF HIGHWAYS

# PITT COUNTY

| STATE | STATE PROJECT REFERENCE NO. | SHEET NO. | TOTAL SHEETS |
|---|---|---|---|
| N.C. | DF15002.2074805 | 1 | |

| STATE PROJ. NO. | F. A. PROJ. NO. | DESCRIPTION |
|---|---|---|
| | | |
| | | |
| | | |
| | | |
| | | |
| | | |
| | | |
| | | |

***LOCATION:*** ***SR 1730 (HERMAN GARRIS ROAD***

***TYPE OF WORK:*** ***STORM RELATED DAMAGE REPAIR CULVERT REPLACEMENT,GRADING,DRAINAGE AND PAVING***

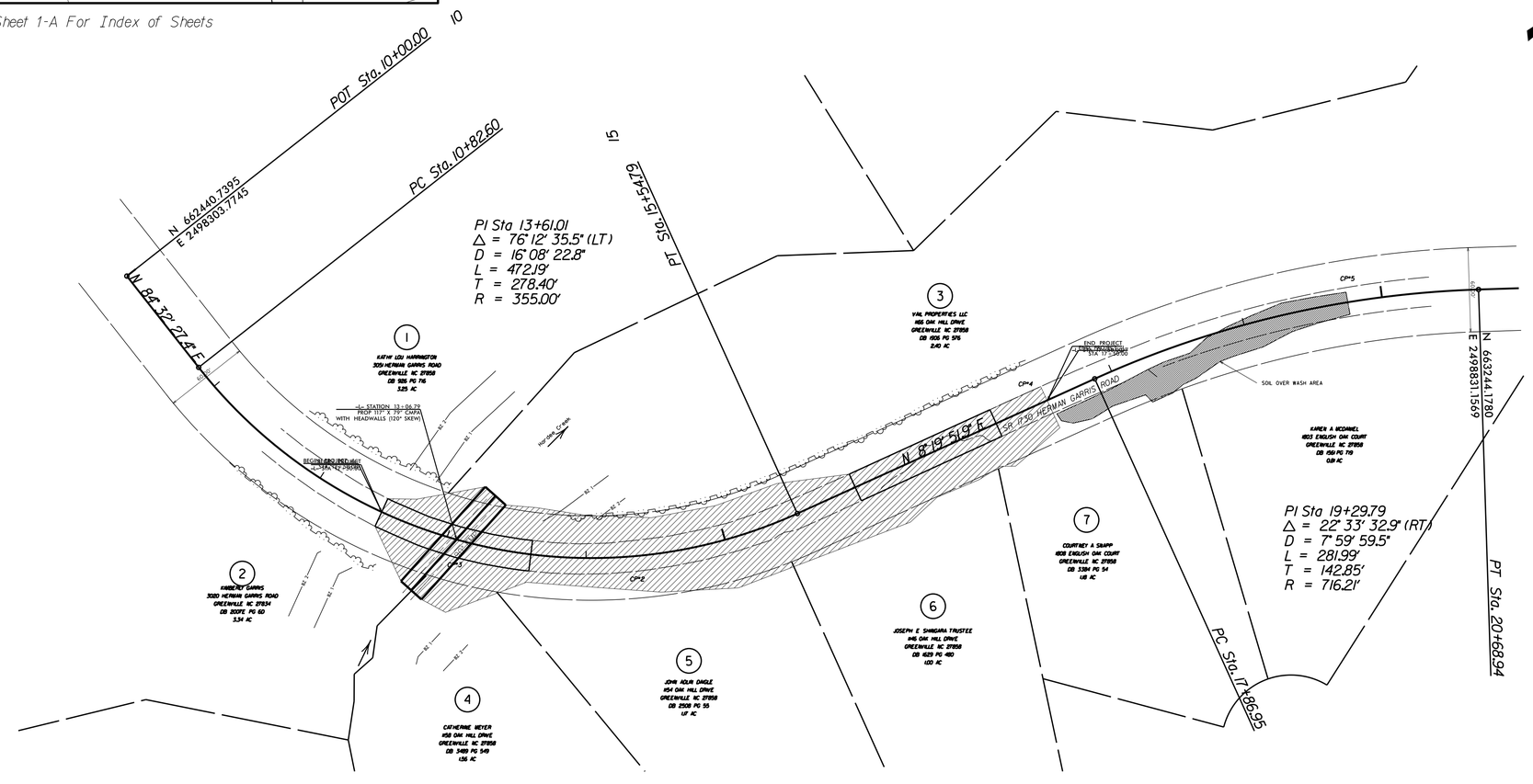


## GRAPHIC SCALES

50 25 0 50 100
PLANS

50 25 0 50 100
PROFILE (HORIZONTAL)

10 5 0 10 20
PROFILE (VERTICAL)

## PROJECT LENGTH

TOTAL LENGTH PROJECT = 0.1515 MILE

Prepared In the Office of:

**DIVISION OF HIGHWAYS**

1701 W 5TH STEET WASHINGTON NC 27889

2012 STANDARD SPECIFICATIONS

***RIGHT OF WAY DATE:*** N/A

***LETTING DATE:*** TBD

WILLIAM C KINCANNON, PE
*PROJECT ENGINEER*

RICH GODLEY
*PROJECT DESIGN ENGINEER*

***HYDRAULICS ENGINEER***

NORTH CAROLINA PROFESSIONAL SEAL 33793 ENGINEER WILLIAM C. KINCANNON

DocuSigned by: William C Kincannon 11/21/2016 P.E.
SIGNATURE:

***ROADWAY DESIGN ENGINEER***

NORTH CAROLINA PROFESSIONAL SEAL 33793 ENGINEER WILLIAM C. KINCANNON

DocuSigned by: William C Kincannon 11/21/2016 P.E.
SIGNATURE:

STATE OF NORTH CAROLINA DEPARTMENT OF TRANSPORTATION

17-NOV-2016 14:18
G:\PROJECTS\PITT\Herman_Garris_Rd\Herman_Garris_Rd_pshl.dgn
$$$$USERNAME$$$$

INDEX OF SHEETS


| | |
| --- | --- |
| 1 | TITLE SHEET |
| 1A | INDEX OF SHEETS, GENERAL NOTES, STANDARD DRAWINGS |
| 1B | CONVENTIONAL SYMBOLS |
| 2 | TYPICAL SECTIONS |
| 3 | SUMMARY OF QUANTITIES |
| 3A | SUMMARY OF DRAINAGE AND EARTHWORK QUANTITIES |
| 4 | PLAN SHEET |
| EC1-EC4 | EROSION CONTROL SHEETS |
| X1A | CROSS-SECTION SUMMARY |
| X1-X2 | CROSS-SECTIONS |


GENERAL NOTES:

2012 SPECIFICATIONS
EFFECTIVE: 01-17-2012
REVISED: 07-30-2012

GRADING AND SURFACING OR RESURFACING:

THE GRADE LINES SHOWN ON CROSS SECTIONS DENOTE THE EXISTING ELEVATION OF PORTION OF ROAD TO BE REPAIRED

GRADE LINES MAY BE ADJUSTED BY THE ENGINEER IN ORDER TO SECURE A PROPER TIE-IN.

CLEARING:

CLEARING ON THIS PROJECT SHALL BE PERFORMED TO THE LIMITS ESTABLISHED BY METHOD II.

SUBSURFACE PLANS:

NO SUBSURFACE PLANS ARE AVAILABLE ON THIS PROJECT. THE CONTRACTOR SHOULD MAKE HIS OWN INVESTIGATION AS TO THE SUBSURFACE CONDITIONS.

UTILITIES:

UTILITY OWNERS ON THIS PROJECT ARE GREENVILLE UTILITIES CORPORATION.

ANY RELOCATION OF EXISTING UTILITIES WILL BE ACCOMPLISHED BY OTHERS. EXCEPT AS SHOWN ON THE PLANS.

RIGHT-OF-WAY MARKERS:

ALL RIGHT-OF-WAY MARKERS ON THIS PROJECT SHALL BE PLACED BY OTHERS.

2012 ROADWAY ENGLISH STANDARD DRAWINGS

The following Roadway Standards as appear in "Roadway Standard Drawings" Highway Design Branch - N. C. Department of Transportation - Raleigh, N. C., Dated January, 2012 are applicable to this project and by reference hereby are considered a part of these plans:

| STD.NO. | TITLE |
| --- | --- |
| DIVISION 2 - EARTHWORK | |
| 200.02 | Method of Clearing - Method II |
| 225.02 | Guide for Grading Subgrade - Secondary and Local |
| DIVISION 3 - PIPE CULVERTS | |
| 300.01 | Method of Pipe Installation |

REVISIONS

8/17/99

17-NOV-2016 14:18
C:\WORKING\TTI\Herman_Garris_Rd\Herman_Garris_Rd_pshla.dgn
$$$$USERNAME$$$$

04/06/15

| PROJECT REFERENCE NO. | SHEET NO. |
|---|---|
| DF15002.2074805 | 1B |

STATE OF NORTH CAROLINA, DIVISION OF HIGHWAYS

# CONVENTIONAL PLAN SHEET SYMBOLS

*Note: Not to Scale* **S.U.E. = Subsurface Utility Engineering*

## *BOUNDARIES AND PROPERTY:*

- State Line
- County Line
- Township Line
- City Line
- Reservation Line
- Property Line
- Existing Iron Pin — EIP
- Property Corner
- Property Monument — ECM
- Parcel/Sequence Number — 123
- Existing Fence Line
- Proposed Woven Wire Fence
- Proposed Chain Link Fence
- Proposed Barbed Wire Fence
- Existing Wetland Boundary — WLB
- Proposed Wetland Boundary — WLB
- Existing Endangered Animal Boundary — EAB
- Existing Endangered Plant Boundary — EPB
- Existing Historic Property Boundary — HPB
- Known Contamination Area: Soil
- Potential Contamination Area: Soil
- Known Contamination Area: Water
- Potential Contamination Area: Water
- Contaminated Site: Known or Potential

## *BUILDINGS AND OTHER CULTURE:*

- Gas Pump Vent or U/G Tank Cap
- Sign — S
- Well — W
- Small Mine
- Foundation
- Area Outline
- Cemetery
- Building
- School
- Church
- Dam

## *HYDROLOGY:*

- Stream or Body of Water
- Hydro, Pool or Reservoir
- Jurisdictional Stream — JS
- Buffer Zone 1 — BZ 1
- Buffer Zone 2 — BZ 2
- Flow Arrow
- Disappearing Stream
- Spring
- Wetland
- Proposed Lateral, Tail, Head Ditch — FLOW
- False Sump

## *RAILROADS:*

- Standard Gauge — CSX TRANSPORTATION
- RR Signal Milepost — MILEPOST 35
- Switch — SWITCH
- RR Abandoned
- RR Dismantled

## *RIGHT OF WAY:*

- Baseline Control Point
- Existing Right of Way Marker
- Existing Right of Way Line
- Proposed Right of Way Line — RW
- Proposed Right of Way Line with Iron Pin and Cap Marker — RW
- Proposed Right of Way Line with Concrete or Granite R/W Marker — RW
- Proposed Control of Access Line with Concrete C/A Marker — CA
- Existing Control of Access — CA
- Proposed Control of Access — CA
- Existing Easement Line — E
- Proposed Temporary Construction Easement — E
- Proposed Temporary Drainage Easement — TDE
- Proposed Permanent Drainage Easement — PDE
- Proposed Permanent Drainage / Utility Easement — DUE
- Proposed Permanent Utility Easement — PUE
- Proposed Temporary Utility Easement — TUE
- Proposed Aerial Utility Easement — AUE
- Proposed Permanent Easement with Iron Pin and Cap Marker

## *ROADS AND RELATED FEATURES:*

- Existing Edge of Pavement
- Existing Curb
- Proposed Slope Stakes Cut — C
- Proposed Slope Stakes Fill — F
- Proposed Curb Ramp — CR
- Existing Metal Guardrail
- Proposed Guardrail
- Existing Cable Guiderail
- Proposed Cable Guiderail
- Equality Symbol
- Pavement Removal

## *VEGETATION:*

- Single Tree
- Single Shrub
- Hedge
- Woods Line
- Orchard
- Vineyard — Vineyard

## *EXISTING STRUCTURES:*

MAJOR:

- Bridge, Tunnel or Box Culvert — CONC
- Bridge Wing Wall, Head Wall and End Wall — CONC WW

MINOR:

- Head and End Wall — CONC HW
- Pipe Culvert
- Footbridge
- Drainage Box: Catch Basin, DI or JB — CB
- Paved Ditch Gutter
- Storm Sewer Manhole — S
- Storm Sewer — S

## *UTILITIES:*

POWER:

- Existing Power Pole
- Proposed Power Pole
- Existing Joint Use Pole
- Proposed Joint Use Pole
- Power Manhole — P
- Power Line Tower
- Power Transformer
- U/G Power Cable Hand Hole
- H-Frame Pole
- U/G Power Line LOS B (S.U.E.*) — P
- U/G Power Line LOS C (S.U.E.*) — P
- U/G Power Line LOS D (S.U.E.*) — P

TELEPHONE:

- Existing Telephone Pole
- Proposed Telephone Pole
- Telephone Manhole — T
- Telephone Pedestal — T
- Telephone Cell Tower
- U/G Telephone Cable Hand Hole
- U/G Telephone Cable LOS B (S.U.E.*) — T
- U/G Telephone Cable LOS C (S.U.E.*) — T
- U/G Telephone Cable LOS D (S.U.E.*) — T
- U/G Telephone Conduit LOS B (S.U.E.*) — TC
- U/G Telephone Conduit LOS C (S.U.E.*) — TC
- U/G Telephone Conduit LOS D (S.U.E.*) — TC
- U/G Fiber Optics Cable LOS B (S.U.E.*) — T FO
- U/G Fiber Optics Cable LOS C (S.U.E.*) — T FO
- U/G Fiber Optics Cable LOS D (S.U.E.*) — T FO

WATER:

- Water Manhole — W
- Water Meter
- Water Valve
- Water Hydrant
- U/G Water Line LOS B (S.U.E*)
- U/G Water Line LOS C (S.U.E*)
- U/G Water Line LOS D (S.U.E*)
- Above Ground Water Line — A/G Water

TV:

- TV Pedestal — C
- TV Tower
- U/G TV Cable Hand Hole — HH
- U/G TV Cable LOS B (S.U.E.*) — TV
- U/G TV Cable LOS C (S.U.E.*) — TV
- U/G TV Cable LOS D (S.U.E.*) — TV
- U/G Fiber Optic Cable LOS B (S.U.E.*) — TV FO
- U/G Fiber Optic Cable LOS C (S.U.E.*) — TV FO
- U/G Fiber Optic Cable LOS D (S.U.E.*) — TV FO

GAS:

- Gas Valve
- Gas Meter
- U/G Gas Line LOS B (S.U.E.*) — G
- U/G Gas Line LOS C (S.U.E.*) — G
- U/G Gas Line LOS D (S.U.E.*) — G
- Above Ground Gas Line — A/G Gas

SANITARY SEWER:

- Sanitary Sewer Manhole
- Sanitary Sewer Cleanout
- U/G Sanitary Sewer Line — SS
- Above Ground Sanitary Sewer — A/G Sanitary Sewer
- SS Forced Main Line LOS B (S.U.E.*) — FSS
- SS Forced Main Line LOS C (S.U.E.*) — FSS
- SS Forced Main Line LOS D (S.U.E.*) — FSS

MISCELLANEOUS:

- Utility Pole
- Utility Pole with Base
- Utility Located Object
- Utility Traffic Signal Box — S
- Utility Unknown U/G Line LOS B (S.U.E.*) — ?UTL
- U/G Tank; Water, Gas, Oil
- Underground Storage Tank, Approx. Loc. — UST
- A/G Tank; Water, Gas, Oil
- Geoenvironmental Boring
- U/G Test Hole LOS A (S.U.E.*)
- Abandoned According to Utility Records — AATUR
- End of Information — E.O.I.

| PROJECT REFERENCE NO. | SHEET NO. |
|---|---|
| DF15002.2074805 | 2 |
| ROADWAY DESIGN ENGINEER | PAVEMENT DESIGN ENGINEER |
| (SEAL) 33793 WILLIAM C. KINCANNON ENGINEER NORTH CAROLINA PROFESSIONAL SEAL DocuSigned by: 11/21/2016 | (SEAL) 33793 WILLIAM C. KINCANNON ENGINEER NORTH CAROLINA PROFESSIONAL SEAL DocuSigned by: 11/21/2016 |

**DOCUMENT NOT CONSIDERED FINAL UNLESS ALL SIGNATURES COMPLETED**

| | |
|---|---|
| C1 | PROP. APPROX. 2" ASPHALT CONCRETE SURFACE COURSE, TYPE SF9.5A, AT AN AVERAGE RATE OF 165 LBS. PER SQ.YD. |
| D1 | PROP. APPROX. 3" ASPHALT CONCRETE INTERMEDIATE COURSE, TYPE I19.0B, AT AN AVERAGE RATE OF 342 LBS. PER SQ. YD. |
| E1 | PROP. APPROX. 5" ASPHALT CONCRETE BASE COURSE, TYPE B25.0B, AT AN AVERAGE RATE OF 570 LBS. PER SQ. YD. |
| T | EARTH MATERIAL. |
| U | EXISTING PAVEMENT. |
| V | FILTER FABRIC |
| Y | #57 WASHED STONE |

NOTE: PAVEMENT EDGE SLOPES ARE 1:1 UNLESS SHOWN OTHERWISE.

## NOTE:

This site **IS** located in a FEMA regulated flood hazard zone with a Detailed Study.
DO NOT raise the roadway grade.
Existing Centerline elevations are provided in the cross sections.

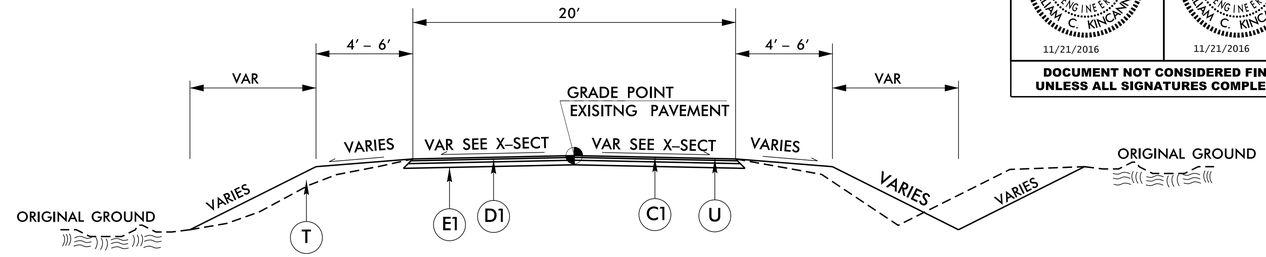


USE TYPICAL SECTION #1

-L- 12+50.00 - 13+60.70
-L- 16+00.00 - 17+10.00

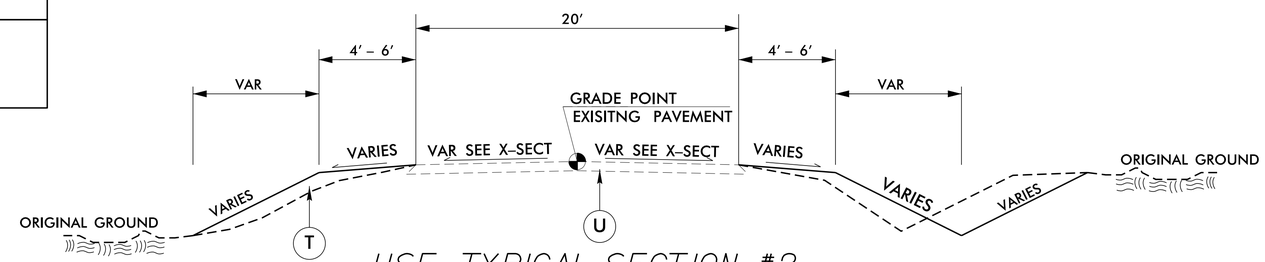


USE TYPICAL SECTION #2

-L- 13+60.70 - 16+00.00
-L- 17+10.00 - 17+50.00

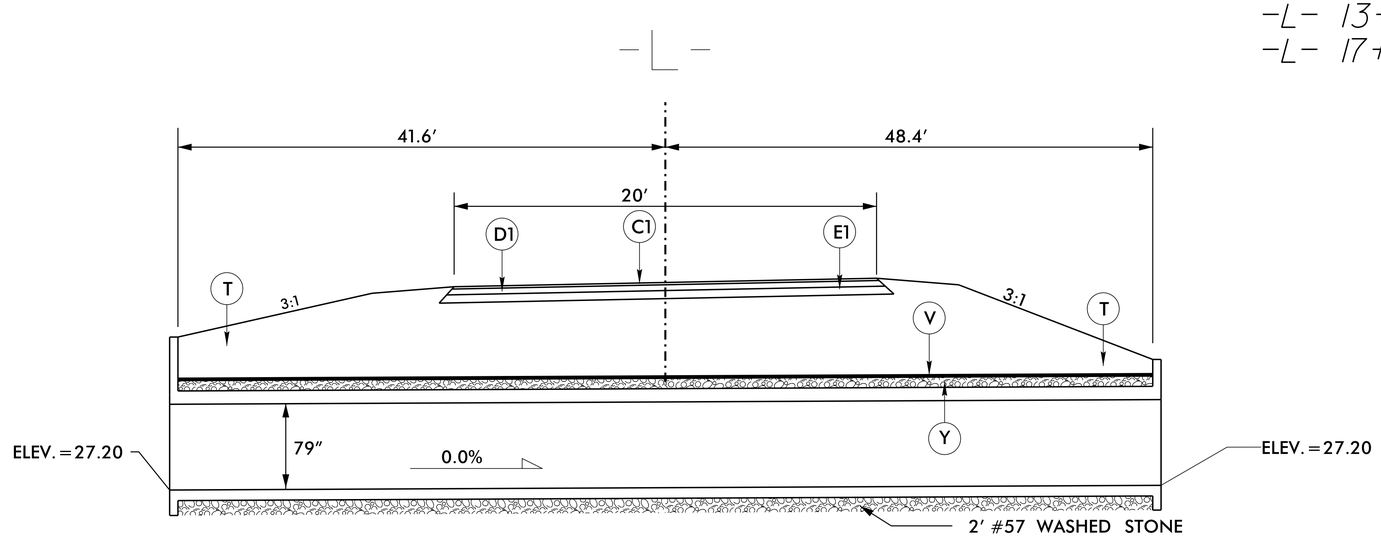


SIDE VIEW CMPA

-L- 13+06.79 CMPA

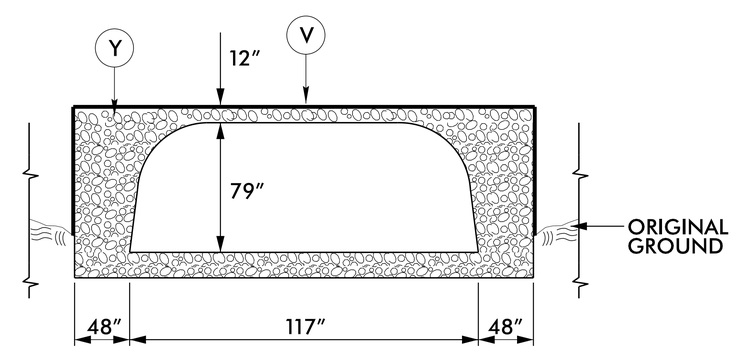


END VIEW CMPA

-L- 13+06.79 CMPA

6/2/99
17-NOV-2016 14:08
C:\WINDOWS\TEMP\Herman_Garris_Rd\Herman_Garris_Rd_psh2.dgn
$$$$USERNAME$$$$

# STATE OF NORTH CAROLINA
# DIVISION OF HIGHWAYS
# SUMMARY OF QUANTITIES

| ITEM | SECT | QUANTITY | UNIT | ITEM DESCRIPTION |
| --- | --- | --- | --- | --- |
| 1 | 800 | 1 | LS | MOBILIZATION |
| 2 | 801 | 1 | LS | CONSTRUCTION SURVEYING |
| 3 | 226 | 255 | CY | UNCLASSIFIED EXCAVATION |
| 4 | 250 | 530 | SY | REMOVAL OF EXISTING ASPHALT PAVEMENT |
| 5 | 265 | 120 | CY | SELECT GRANULAR MATERIAL |
| 6 | 412 | 1240 | CY | UNCLASSIFIED STRUCTURE EXCAVATION -L- STATION 13+06.79 |
| 7 | 520 | 310 | TON | #57 STONE |
| 8 | 610 | 145 | TON | ASPHALT CONC BASE COURSE,TYPE B25.0B |
| 9 | 610 | 90 | TON | ASPHALT CONC INTERMEDIATE COURSE,TYPE I19.0B |
| 10 | 610 | 60 | TON | ASPHALT CONC SURFACE COURSE,TYPE SF9.5A |
| 11 | 620 | 20 | TON | ASPHALT BINDER FOR PLANT MIX |
| 12 | 876 | 500 | SY | GEOTEXTILE FOR DRAINAGE |
| 13 | 1605 | 700 | LF | TEMPORARY SILT FENCE |
| 14 | 1605 | 200 | LF | SAFETY FENCE |
| 15 | 1610 | 5 | TON | STONE FOR EROSION CONTROL,CLASS B |
| 16 | 1610 | 10 | TON | SEDIMENT CONTROL STONE |
| 17 | 1620 | 50 | LB | SEED FOR TEMPORARY SEEDING |
| 18 | 1620 | 0.20 | TON | FERTILIZER FOR TEMPORARY SEEDING |
| 19 | 1632 | 70 | LF | 1/4" HARDWARE CLOTH |
| 20 | 1660 | 1 | ACRE | SEEDING AND MULCHING |
| 21 | 1661 | 50 | LB | SEED FOR REPAIR SEEDING |
| 22 | 1661 | 0.2 | TON | FERTILIZER FOR REPAIR SEEDING |
| 23 | SP | 1 | LS | REMOVAL OF EXISTING STRUCTURE -L- STA 13+06.79 |
| 24 | SP | 50 | LF | WATTLE |
| 25 | SP | 2 | LB | POLYACRYLAMIDE (PAM) |
| 26 | SP | 1 | LS | INSTALL NCDOT SUPPLIED 117" X 79" CMPA -L- STATION 13+06.79 |
| 27 | SP | 140 | LF | IMPERVIOUS DIKE |
| 28 | SP | 3 | EA | RESPONSE FOR EROSION CONTROL |
| 29 | SP | 1 | LS | DEWATERING |

REVISIONS


8/17/99

22-NOV-2016 08:37
S:\PROJECTS\Herman_Garris_Rd\Herman_Garris_Rd_psh3.dgn
$$$$USERNAME$$$$

| PROJECT REFERENCE NO. | SHEET NO. |
|---|---|
| DF15002.2074805 | 3A |

STATE OF NORTH CAROLINA
DIVISION OF HIGHWAYS

## *LIST OF PIPES, ENDWALLS, ETC.*

| STATION | LOCATION (LT, RT, OR CL) | STRUCTURE NO. FROM | STRUCTURE NO. TO | TOP ELEVATION | INVERT ELEVATION | INVERT ELEVATION | SLOPE CRITICAL | PIPE SIZE 15" | 18" | 24" | 30" | 36" | 42" | 48" | 54" | 60" | 66" | 72" | 78" | 18" PIPE REMOVAL | 117" X 79" CMPA | REMARKS |
|---|---|---|---|---|---|---|---|---|---|---|---|---|---|---|---|---|---|---|---|---|---|---|
| –L– 13+06.79 | CL | 1 | | | 27.20 | 27.20 | 0.0% | | | | | | | | | | | | | 45' | 90' | |
| | | | | | | | | | | | | | | | | | | | | | | |
| | | | | | | | | | | | | | | | | | | | | | | |
| | | | | | | | | | | | | | | | | | | | | | | |
| TOTALS | | | | | | | | | | | | | | | | | | | | | | |

NOTE: Invert Elevations are for Bid Purposes only and shall not be used for project construction stakeout.
See "Standard Specifications For Roads and Structures, Section 300–5".

## *SUMMARY OF EARTHWORK*
### *IN CUBIC YARDS*

| LOCATION | UNCLASSIFIED EXCAVATION | STRUCTURE EXCAVATION | UNDERCUT | EMBT+% | BORROW | WASTE |
|---|---|---|---|---|---|---|
| –L– 12+50.00 – 17+50.00 | 253 | 1240 | 0 | 830 | 0 | 157 |
| UNDERCUT (CONTINGENCY) | | | 100 | 120 | 120 | 100 |
| | | | | | | |
| | | | | | | |
| | | | | | | |
| | | | | | | |
| | | | | | | |
| SUB TOTAL | 253 | 1240 | 100 | 950 | 120 | 257 |
| | | | | | | |
| SAY | 255 | 1240 | 100 | 950 | 120 | 260 |

## *PAVEMENT REMOVAL SUMMARY*
### *IN SQUARE YARDS*

| LINE | STATION – STATION | LOCATION | REMOVAL (SY) |
|---|---|---|---|
| –L– | 12+50.00 – 13+60.70 | CL | 270 |
| –L– | 16+00.00 – 17+10.00 | CL | 255 |
| | | | |
| TOTAL | | | 525 |
| | | | |
| SAY | | | 530 |

NOTE:

APPROXIMATE QUANTITIES ONLY. UNCLASSIFIED EXCAVATION, UNCLASSIFIED STRUCTURE EXCAVATION, BORROW EXCAVATION, FINE GRADING, CLEARING AND GRUBBING AND REMOVAL OF EXISTING PAVEMENT.

REVISIONS

8/17/99

17-NOV-2016 14:48
C:\WORKSPACE\TTT\Herman_Garris_Rd\Herman_Garris_Rd_psh3a.dgn
$$$$USERNAME$$$$

| PROJECT REFERENCE NO. | SHEET NO. |
|---|---|
| 15002.2074805 | 4 |
| R/W SHEET NO. | |
| ROADWAY DESIGN ENGINEER | HYDRAULICS ENGINEER |

ROADWAY DESIGN ENGINEER: NORTH CAROLINA PROFESSIONAL ENGINEER SEAL 33793 WILLIAM C. KINCANNON, DocuSigned by: William C. Kincannon, 11/21/2016

HYDRAULICS ENGINEER: NORTH CAROLINA PROFESSIONAL ENGINEER SEAL 33793 WILLIAM C. KINCANNON, DocuSigned by: William C. Kincannon, 11/21/2016

# RIGHT OF WAY AREA SUMMARY

| PARCEL NO. | PROPERTY OWNER NAME | LOCATION | TOTAL PARCEL AREA [ACRES] | AREA TO BE (CONST. EASEMENT) [ACRES] | AREA TO BE (PDE) [ACRES] | PARCEL AREA REMAINING [ACRES] |
|---|---|---|---|---|---|---|
| 1 | KATHY LOU HARRINGTON | LT | 3.25 | | 0.024 | 3.226 |
| 2 | KIMBERLY GARRIS | RT | 3.34 | | 0.021 | 3.319 |
| 3 | VAIL PROPERTIES LLC | LT | 2.40 | | 0.048 | 2.352 |
| 4 | CATHERINE MEYER | RT | 1.56 | | 0.039 | 1.521 |
| 5 | JOHN ADLIN DAIGLE | RT | 1.17 | 0.015 | 0.002 | 1.153 |
| 6 | JOSEPH E SHINGARA TRUSTEE | RT | 1.00 | 0.037 | | 0.963 |
| 7 | COURTNEY A. SNAPP | RT | 1.18 | 0.006 | | 1.174 |

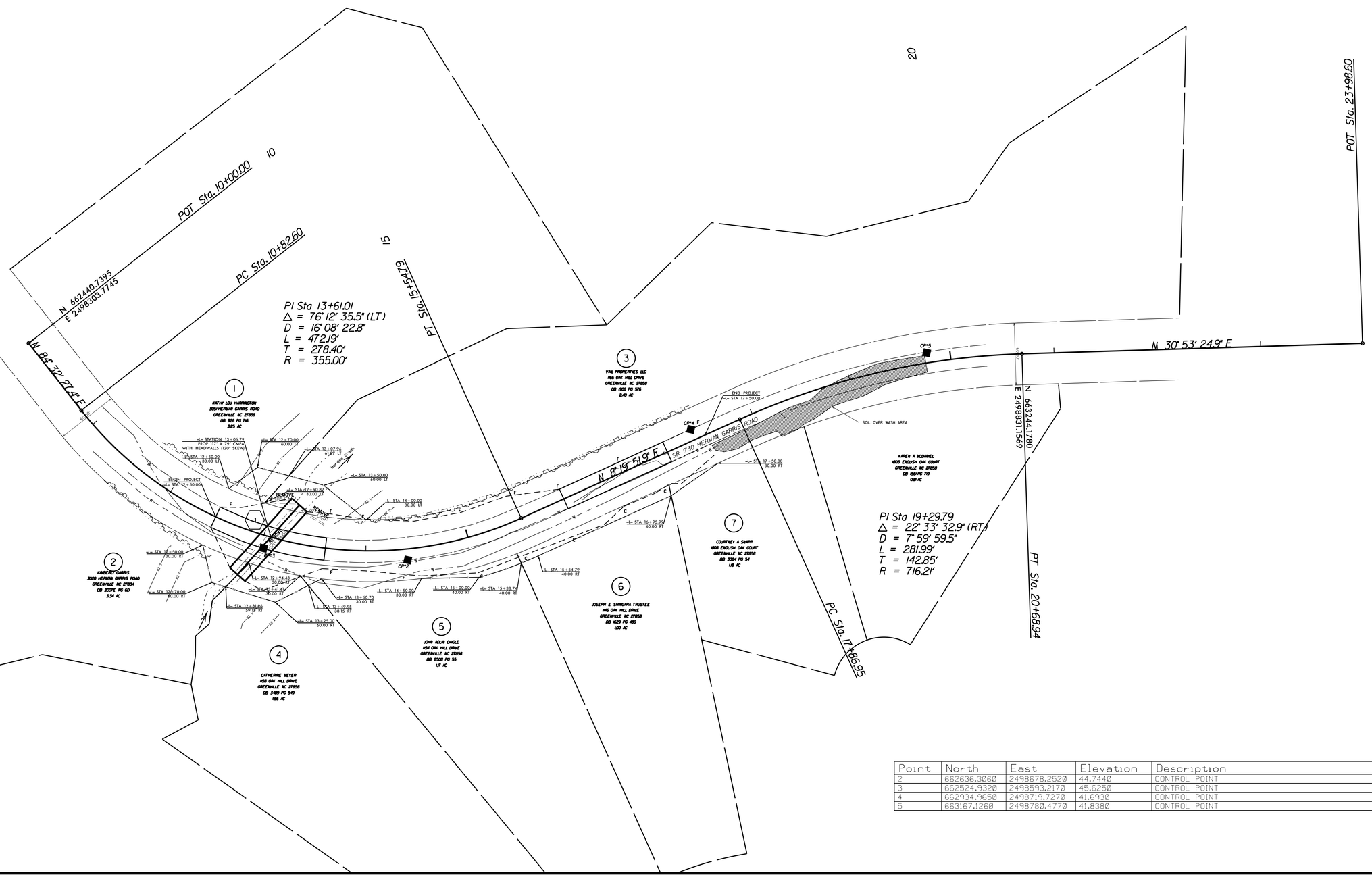


| Point | North | East | Elevation | Description |
|---|---|---|---|---|
| 2 | 662636.3060 | 2498678.2520 | 44.7440 | CONTROL POINT |
| 3 | 662524.9320 | 2498593.2170 | 45.6250 | CONTROL POINT |
| 4 | 662934.9850 | 2498719.7270 | 41.6930 | CONTROL POINT |
| 5 | 663167.1260 | 2498780.4770 | 41.8380 | CONTROL POINT |

REVISIONS

8/17/99

17-NOV-2016 14:18
C:\Users\jcrouse\AppDATA\Local\Temp\Herman_Garris_Rd\Herman_Garris_Rd_psh4.dgn
$$$$USERNAME$$$$

PROJECT: DF15002.2074805

| STATE | STATE PROJECT REFERENCE NO. | SHEET NO. | TOTAL SHEETS |
|---|---|---|---|
| N.C. | DF15002.2074805 | EC-1 | |

| STATE PROJ. NO. | F. A. PROJ. NO. | DESCRIPTION |
|---|---|---|
| | | |
| | | |
| | | |
| | | |
| | | |

# STATE OF NORTH CAROLINA
# DIVISION OF HIGHWAYS

## PLAN FOR PROPOSED
# HIGHWAY EROSION CONTROL

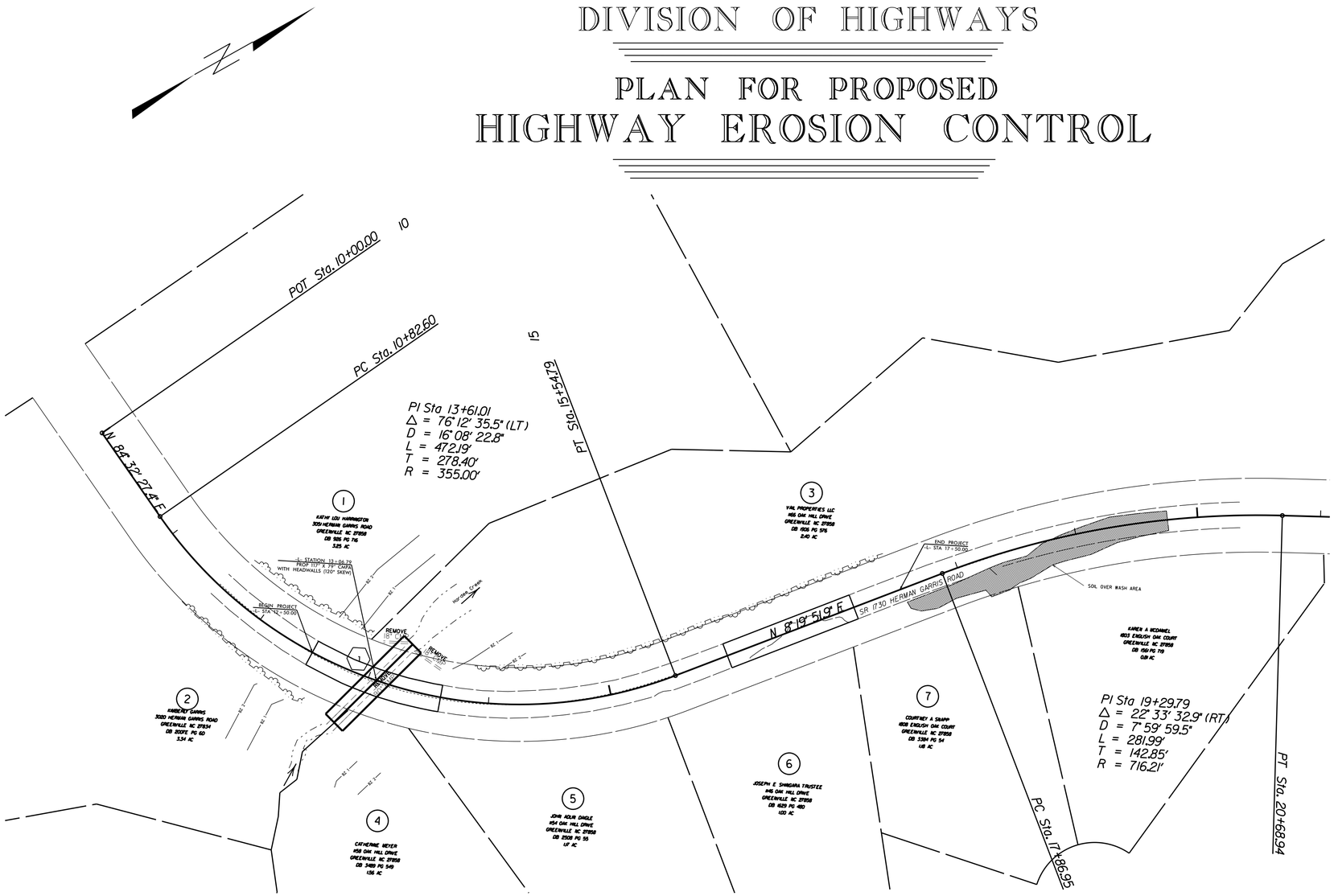


## EROSION AND SEDIMENT CONTROL MEASURES

| Std. # | Description | Symbol |
|---|---|---|
| 1630.03 | Temporary Silt Ditch | TSD |
| 1630.05 | Temporary Diversion | TD |
| 1605.01 | Temporary Silt Fence | |
| 1606.01 | Special Sediment Control Fence | |
| 1622.01 | Temporary Berms and Slope Drains | |
| 1630.02 | Silt Basin Type B | |
| 1633.01 | Temporary Rock Silt Check Type-A | |
| | Temporary Rock Silt Check Type-A with Matting and Polyacrylamide (PAM) | |
| 1633.02 | Temporary Rock Silt Check Type-B | |
| | Wattle / Coir Fiber Wattle | EW / CFW |
| | Wattle / Coir Fiber Wattle with Polyacrylamide (PAM) | |
| 1634.01 | Temporary Rock Sediment Dam Type-A | |
| 1634.02 | Temporary Rock Sediment Dam Type-B | |
| 1635.01 | Rock Pipe Inlet Sediment Trap Type-A | |
| 1635.02 | Rock Pipe Inlet Sediment Trap Type-B | |
| 1630.04 | Stilling Basin | |
| 1630.06 | Special Stilling Basin | |
| | Rock Inlet Sediment Trap: | |
| 1632.01 | Type A | A |
| 1632.02 | Type B | B |
| 1632.03 | Type C | C |
| | Skimmer Basin | |
| | Tiered Skimmer Basin | |
| | Infiltration Basin | |

**THIS PROJECT CONTAINS EROSION CONTROL PLANS FOR CLEARING AND GRUBBING PHASE OF CONSTRUCTION.**

**GRAPHIC SCALE**

25 0 50
PLANS

25 0 50
PROFILE (HORIZONTAL)

5 0 10
PROFILE (VERTICAL)

*DIVISION TWO DDC UNIT*
*DIVISION OF HIGHWAYS*
*STATE OF NORTH CAROLINA*

*THESE EROSION AND SEDIMENT CONTROL PLANS COMPLY WITH THE REGULATIONS SET FORTH BY THE NCG–010000 GENERAL CONSTRUCTION PERMIT EFFECTIVE AUGUST 3, 2011 ISSUED BY THE NORTH CAROLINA DEPARTMENT OF ENVIRONMENT AND NATURAL RESOURCES DIVISION OF WATER QUALITY.*

***2012 STANDARD SPECIFICATIONS***

*Prepared In the Office of:*

***DIVISION 2 DDC***
*1701 W FIFTH ST.*
*WASHINGTON, NC 27889*

***2012 STANDARD SPECIFICATIONS***

*Designed by:*

*RICH GODLEY* — *NAME*
*3559* — *LEVEL III CERTIFICATION NO.*

Roadway Standard Drawings

The following roadway english standards as appear in "Roadway Standard Drawings"– Roadway Design Unit – N. C. Department of Transportation – Raleigh, N. C., dated January 2012 and the latest revison thereto are applicable to this project and by reference hereby are considered a part of these plans.

| | | | |
|---|---|---|---|
| 1604.01 | Railroad Erosion Control Detail | 1632.01 | Rock Inlet Sediment Trap Type A |
| 1605.01 | Temporary Silt Fence | 1632.02 | Rock Inlet Sediment Trap Type B |
| 1606.01 | Special Sediment Control Fence | 1632.03 | Rock Inlet Sediment Trap Type C |
| 1607.01 | Gravel Construction Entrance | 1633.01 | Temporary Rock Silt Check Type A |
| 1622.01 | Temporary Berms and Slope Drains | 1633.02 | Temporary Rock Silt Check Type B |
| 1630.01 | Riser Basin | 1634.01 | Temporary Rock Sediment Dam Type A |
| 1630.02 | Silt Basin Type B | 1634.02 | Temporary Rock Sediment Dam Type B |
| 1630.03 | Temporary Silt Ditch | 1635.01 | Rock Pipe Inlet Sediment Trap Type A |
| 1630.04 | Stilling Basin | 1635.02 | Rock Pipe Inlet Sediment Trap Type B |
| 1630.05 | Temporary Diversion | 1640.01 | Coir Fiber Baffle |
| 1630.06 | Special Stilling Basin | 1645.01 | Temporary Stream Crossing |
| 1631.01 | Matting Installation | | |

ROJECTS\PI\HERMAN_Garris_Rd\Herman_Garris_Rd_EC1.DGN
17-NOV-2016 14:8
$$$$USERNAME$$$$

| PROJECT REFERENCE NO. | SHEET NO. |
|---|---|
| DF15002.2074805 | EC2 |

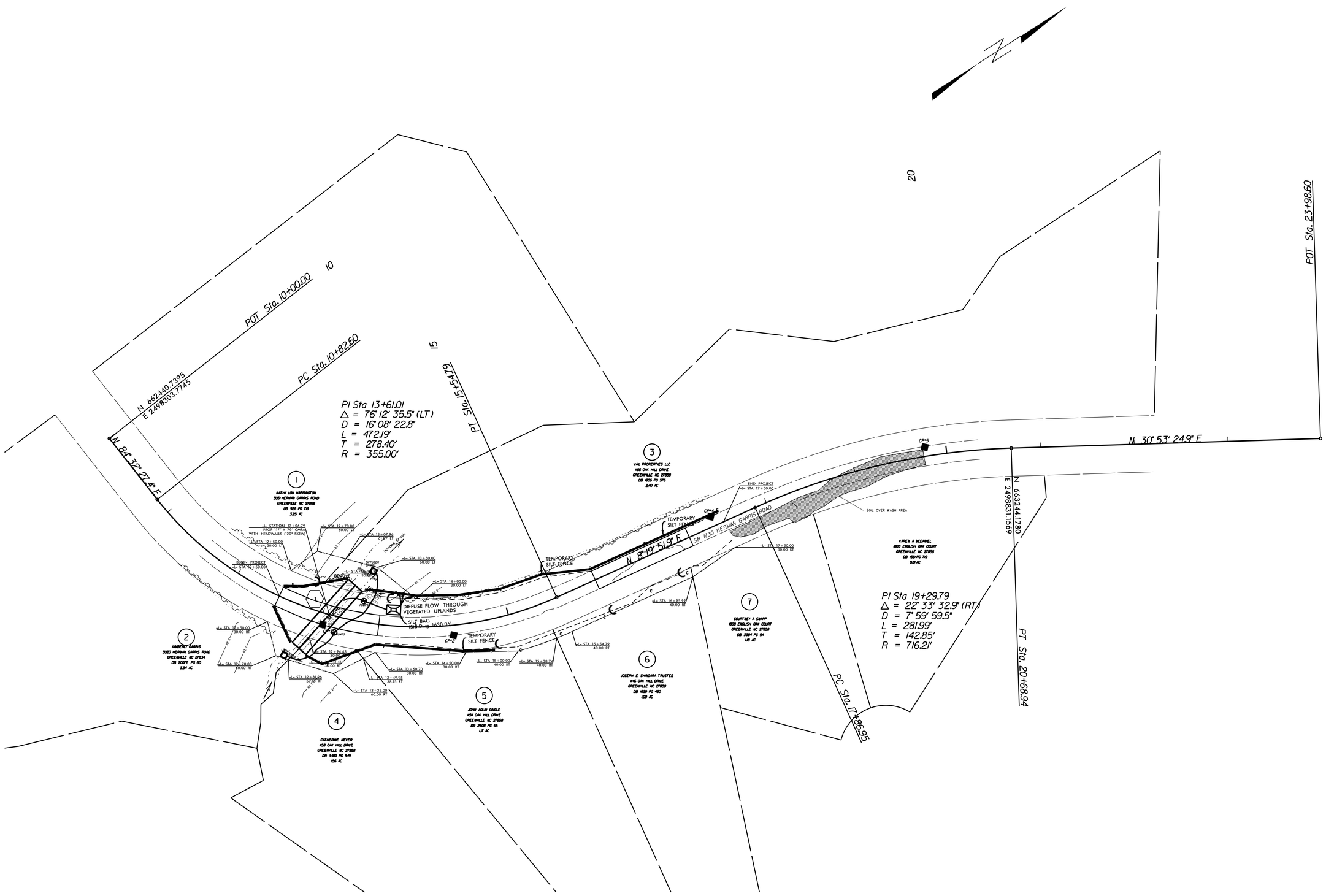


REVISIONS

8/17/99

17-NOV-2016 14:18
C:\PROJECTS\DF15002_STI\Herman_Garris_Rd\Herman_Garris_Rd_EC2.DGN
$$$$USERNAME$$$$

| PROJECT REFERENCE NO. | SHEET NO. |
|---|---|
| DF15002.2074805 | EC3 |

# SILT FENCE COIR FIBER WATTLE BREAK DETAIL

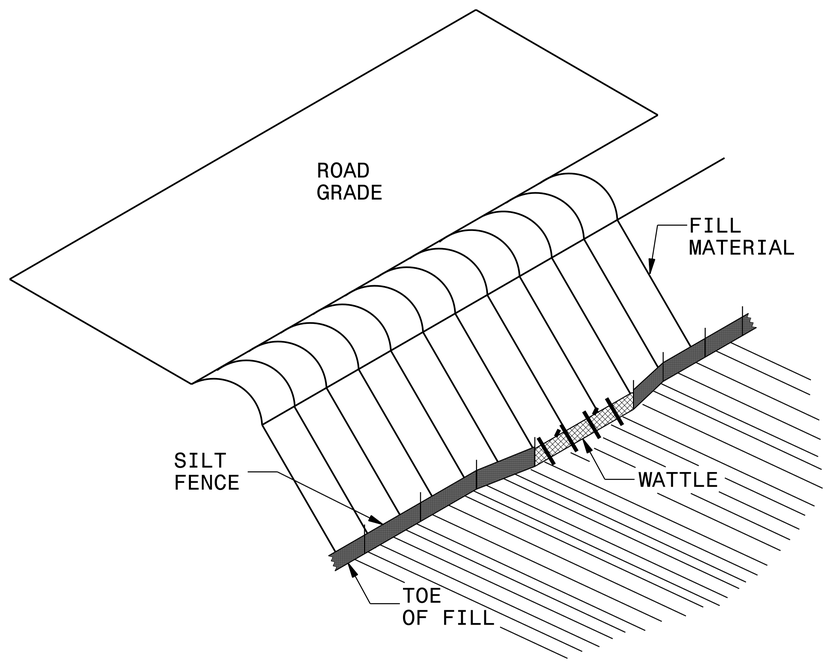


**ISOMETRIC VIEW**

NOTES:

USE MINIMUM 12 IN. DIAMETER COIR FIBER (COCONUT FIBER) WATTLE AND LENGTH OF 10 FT.

EXCAVATE A 1 TO 2 INCH TRENCH FOR WATTLE TO BE PLACED.

DO NOT PLACE WATTLE ON TOE OF SLOPE.

USE 2 FT. WOODEN STAKES WITH A 2 IN. BY 2 IN. NOMINAL CROSS SECTION.

INSTALL A MINIMUM OF 2 UPSLOPE STAKES AND 4 DOWNSLOPE STAKES AT AN ANGLE TO WEDGE WATTLE TO GROUND.

PROVIDE STAPLES MADE OF 0.125 IN. DIAMETER STEEL WIRE FORMED INTO A U SHAPE NOT LESS THAN 12″ IN LENGTH.

INSTALL STAPLES APPROXIMATELY EVERY 1 LINEAR FOOT ON BOTH SIDES OF WATTLE AND AT EACH END TO SECURE IT TO THE SOIL.

WATTLE INSTALLATION CAN BE ON OUTSIDE OF THE SILT FENCE AS DIRECTED.

INSTALL TEMPORARY SILT FENCE IN ACCORDANCE WITH SECTION 1605 OF THE STANDARD SPECIFICATIONS.

INSET A

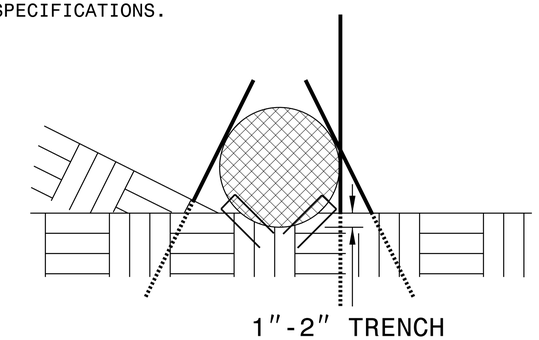


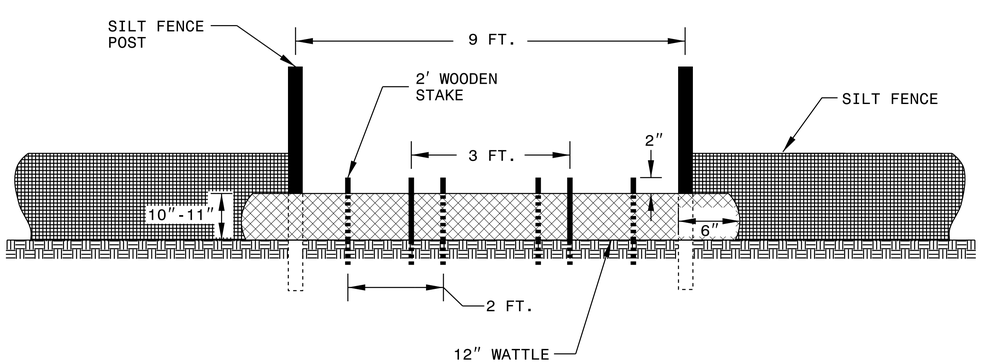


**VIEW FROM SLOPE**

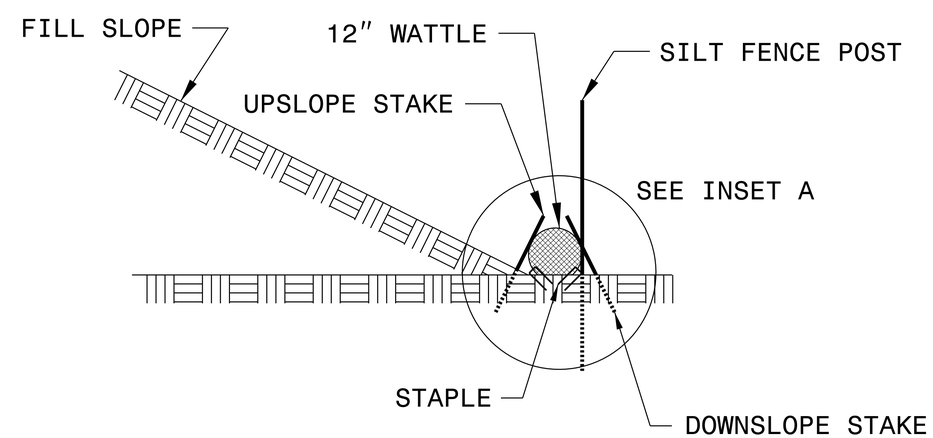


**SIDE VIEW**

| PROJECT REFERENCE NO. | SHEET NO. |
|---|---|
| DF15002.2074805 | EC4 |

DIVISION OF HIGHWAYS
STATE OF NORTH CAROLINA

# SOIL STABILIZATION TIMEFRAMES

| SITE DESCRIPTION | STABILIZATION TIME | TIMEFRAME EXCEPTIONS |
|---|---|---|
| PERIMETER DIKES, SWALES, DITCHES AND SLOPES | 7 DAYS | NONE |
| HIGH QUALITY WATER (HQW) ZONES | 7 DAYS | NONE |
| SLOPES STEEPER THAN 3:1 | 7 DAYS | IF SLOPES ARE 10' OR LESS IN LENGTH AND ARE NOT STEEPER THAN 2:1, 14 DAYS ARE ALLOWED. |
| SLOPES 3:1 OR FLATTER | 14 DAYS | 7 DAYS FOR SLOPES GREATER THAN 50' IN LENGTH. |
| ALL OTHER AREAS WITH SLOPES FLATTER THAN 4:1 | 14 DAYS | NONE, EXCEPT FOR PERIMETERS AND HQW ZONES. |

| PROJECT REFERENCE NO. | SHEET NO. |
|---|---|
| 15002.2074805 | X1A |

STATE OF NORTH CAROLINA
DIVISION OF HIGHWAYS

# CROSS-SETION SUMMARY

## IN CUBIC YARDS

| LOCATION (-L-) | UNCLASSIFIED EXCAVATION | UNDERCUT | EMBANKMENT | STRUCTURE EXCAVATION |
|---|---|---|---|---|
| 12+50.00 | 0 | 0 | 0 | 0 |
| 12+69.84 | 14 | 0 | 3 | 0 |
| 12+90.27 | 15 | 0 | 5 | 0 |
| 13+01.24 | 14 | 0 | 28 | 311 |
| 13+06.79 | 13 | 0 | 21 | 305 |
| 13+12.38 | 16 | 0 | 22 | 306 |
| 13+23.70 | 20 | 0 | 33 | 318 |
| 13+60.70 | 28 | 0 | 42 | 0 |
| 14+00.00 | 28 | 0 | 83 | 0 |
| 14+50.00 | 17 | 0 | 76 | 0 |
| 15+00.00 | 0 | 0 | 60 | 0 |
| 15+50.00 | 0 | 0 | 101 | 0 |
| 16+00.00 | 17 | 0 | 110 | 0 |
| 16+25.53 | 18 | 0 | 59 | 0 |
| 16+50.00 | 15 | 0 | 54 | 0 |
| 16+65.90 | 7 | 0 | 29 | 0 |
| 16+82.65 | 5 | 0 | 28 | 0 |
| 17+00.00 | 7 | 0 | 26 | 0 |
| 17+10.00 | 6 | 0 | 14 | 0 |
| 17+50.00 | 13 | 0 | 36 | 0 |

NOTE: EMBANKMENT COLUMN DOES NOT INCLUDE BACKFILL FOR UNDERCUT.

NOTE:

APPROXIMATE QUANTITIES ONLY. UNCLASSIFIED EXCAVATION, UNCLASSIFIED STRUCTURE EXCAVATION, BORROW EXCAVATION, FINE GRADING, CLEARING AND GRUBBING AND REMOVAL OF EXISTING PAVEMENT.

17-NOV-2016 14:19
C:\WINDOWS\TEMP\TTT\Herman_Garris_Rd\Herman_Garris_Rd_pshx1a.dgn
$$$$USERNAME$$$$

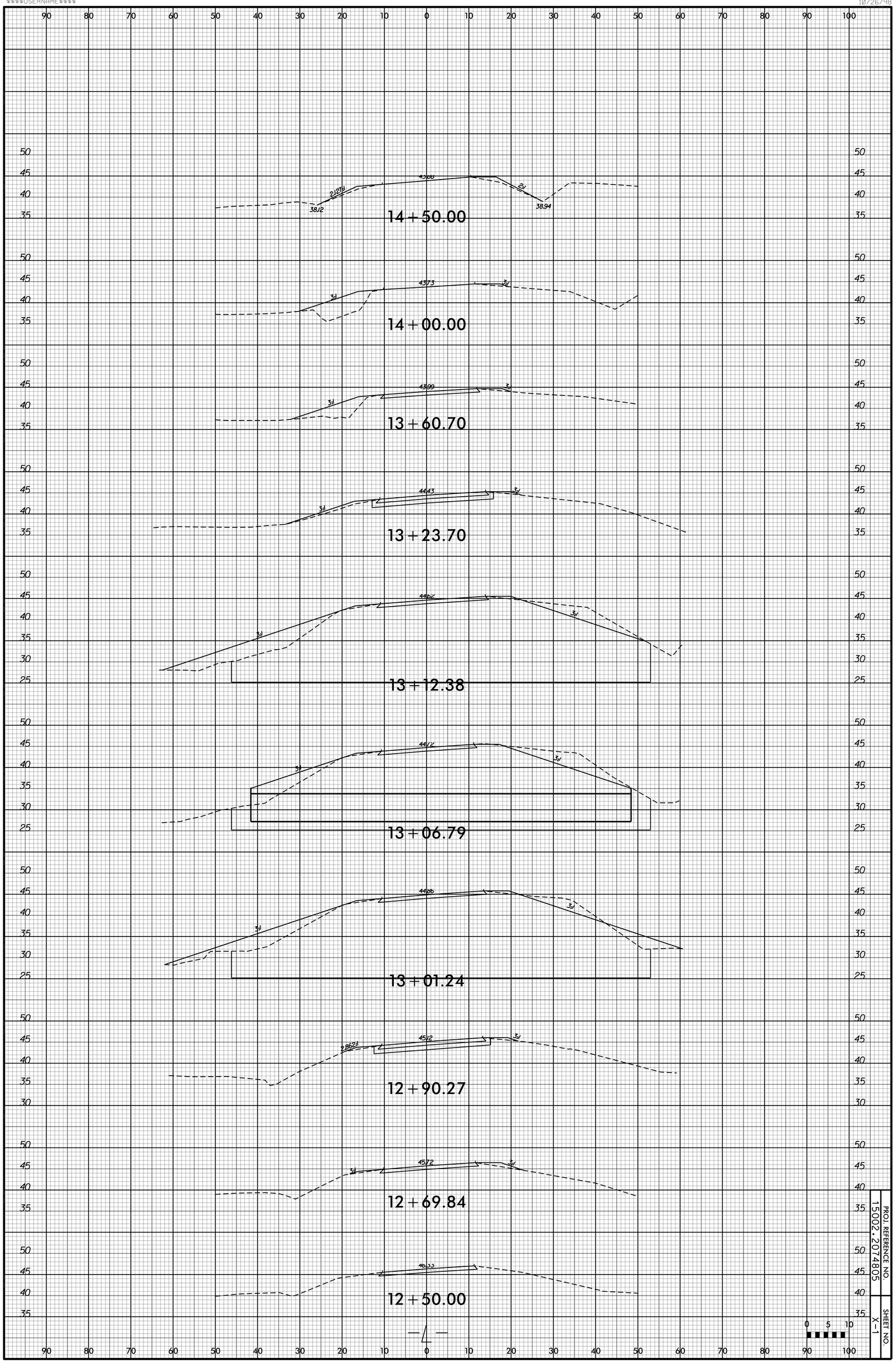
14+50.00
43.88
21.78
38.12
38.94
2:1
14+00.00
43.73
3:1
13+60.70
43.99
3:1
13+23.70
44.43
3:1
13+12.38
44.62
3:1
13+06.79
44.12
3:1
13+01.24
44.26
3:1
12+90.27
45.12
28.62:1
3:1
12+69.84
45.72
3:1
12+50.00
46.33
PROJ. REFERENCE NO.
15002-2074805
SHEET NO.
X-1
0 5 10

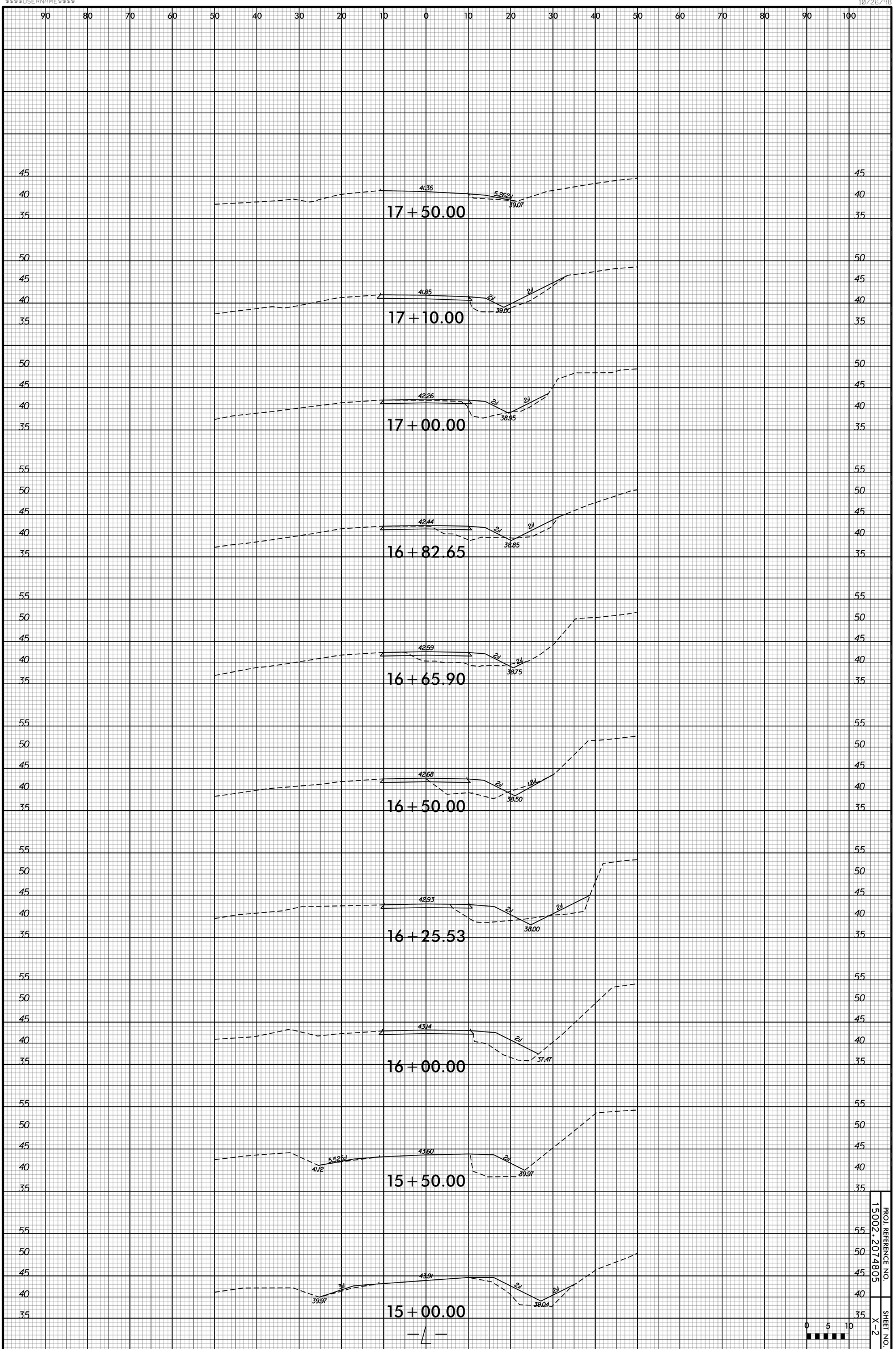




PROJ. REFERENCE NO. 15002-2074805

SHEET NO. X-2