PROJECT REFERENCE NO.	SHEET NO.
48102	2
ROADWAY DESIGN ENGINEER	PAVEMENT DESIGN ENGINEER

NORTH CAROLINA PROFESSIONAL SEAL 16710 ENGINEER DWAYNE H. ALLIGOOD

DocuSigned by: Dwayne Alligood 10/10/2014 E7E42C259C374D1...

DocuSigned by: Dwayne Alligood 10/10/2014 E7E42C259C374D1...

C1	PROP. APPROX. 1.5″ ASPHALT CONCRETE SURFACE COURSE, TYPE S9.5B, AT AN AVERAGE RATE OF 168 LBS. PER SQ.YD.
D1	PROP. APPROX. 3″ ASPHALT CONCRETE INTERMEDIATE COURSE, TYPE I19.0B, AT AN AVERAGE RATE OF 342 LBS. PER SQ. YD.
E1	PROP. APPROX. 5.5″ ASPHALT CONCRETE BASE COURSE, TYPE B25.0B, AT AN AVERAGE RATE OF 627 LBS. PER SQ. YD.
R1	EXISTING 2′ - 6″ CURB AND GUTTER
T	EARTH MATERIAL.
U	EXISTING PAVEMENT.
V	1.5″ MILLING

NOTE: PAVEMENT EDGE SLOPES ARE 1:1 UNLESS SHOWN OTHERWISE.

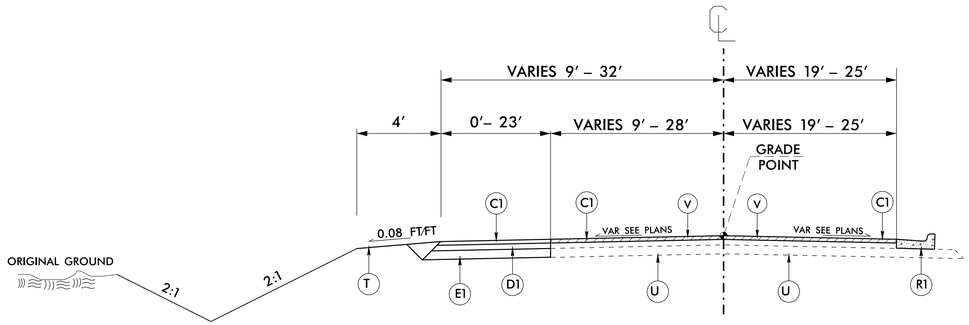

USE TYPICAL SECTION #1 (NTS)

-L- STA 10+00.00 TO STA 19+50.00

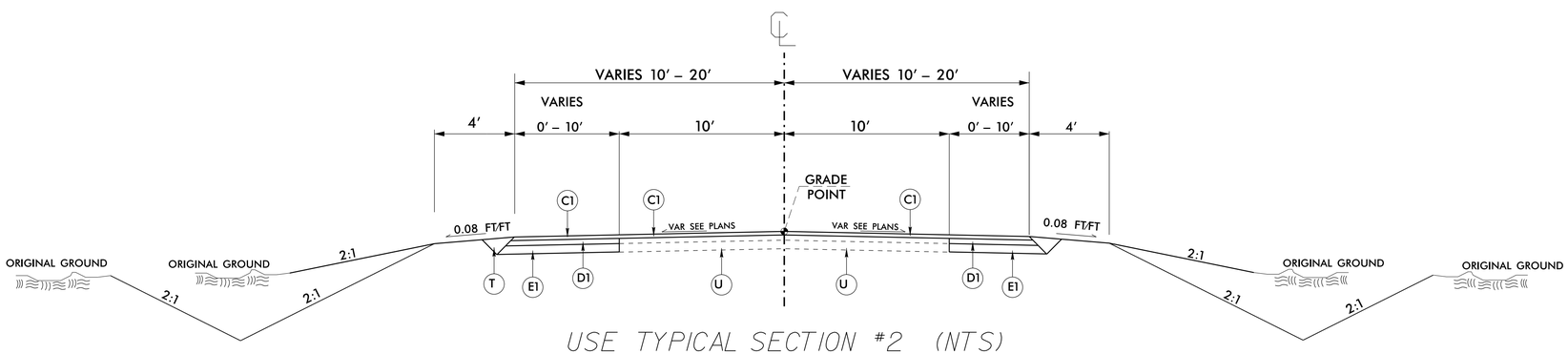

USE TYPICAL SECTION #2 (NTS)

-L- STA 19+50.00 TO STA 44+00.00

6/2/99

10-NOV-2014 12:55
C:\PROJECTS\TENDER\HILLFARM\HILLFARM_ddc2_psh2.dgn
$$$$USERNAME$$$$