PROJECT REFERENCE NO.	SHEET NO.
48102	PM 1

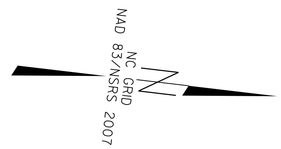

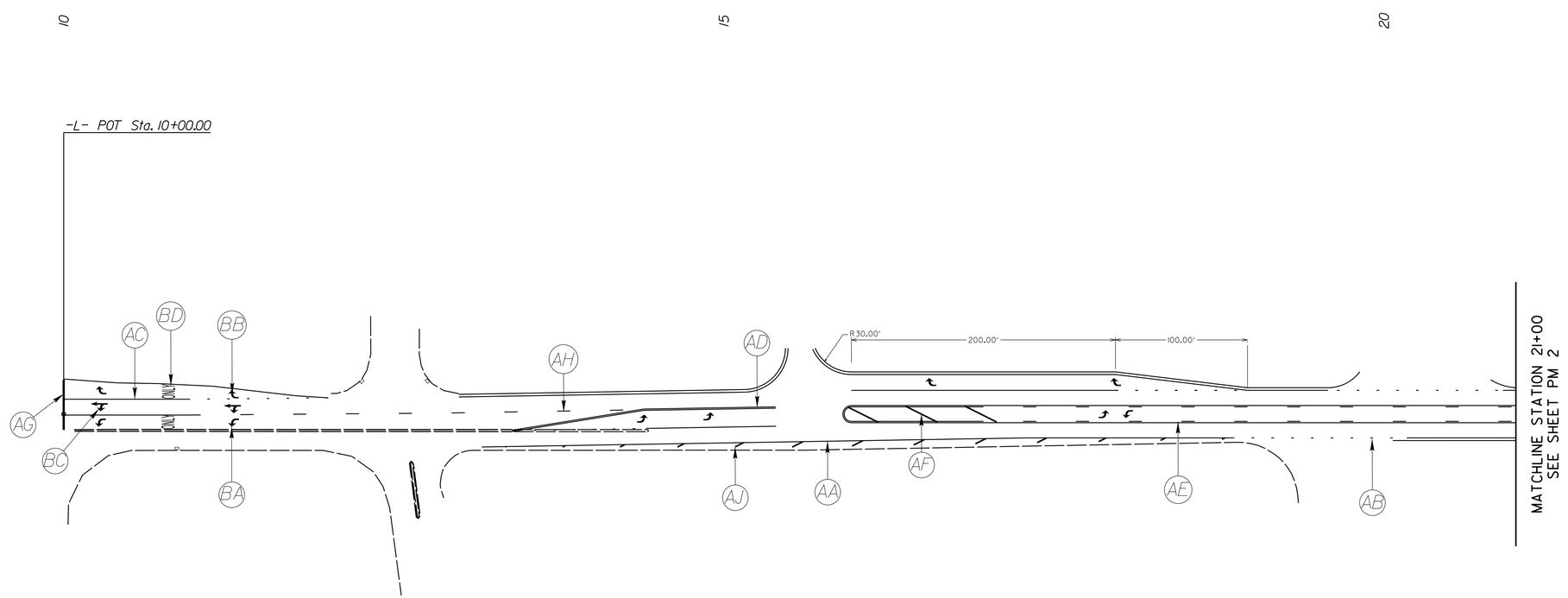

PAVEMENT MARKING SCHEDULE

PAVEMENT MARKING LINES

AA - THERMOPLASTIC	(4" WHITE,	90 MILS)	EDGE LINE
AB - THERMOPLASTIC	(4" WHITE,	120 MILS)	13' MINI SKIP
AC - THERMOPLASTIC	(4" WHITE,	120 MILS)	SOLID LANE LINE
AD - THERMOPLASTIC	(4" YELLOW,	120 MILS)	SOLID DOUBLE YELLOW
AE - THERMOPLASTIC	(4" YELLOW,	120 MILS)	SOLID YELLOW SKIP
AF - THERMOPLASTIC	(8" YELLOW,	90 MILS)	SOLID YELLOW DIAGONAL LINE
AG - THERMOPLASTIC	(24" WHITE,	120 MILS)	STOP BAR
AH - THERMOPLASTIC	(4" WHITE,	120 MILS)	SKIP LINE
AJ - THERMOPLASTIC	(12" WHITE,	90 MILS)	SOLID WHITE DIAGONAL LINE

PAVEMENT MARKING SYMBOLS

BA - THERMOPLASTIC (LEFT ARROW, 90 MILS)
BB - THERMOPLASTIC (RIGHT ARROW, 90 MILS)
BC - THERMOPLASTIC (COMBO STRAIGHT LEFT ARROW, 90 MILS)
BD - THERMOPLASTIC (CHARACTER, 120 MILS)

NOTE

PAINT MARKINGS AND TRAFFIC CONTROL DEVICES SHALL BE IN ACCORDANCE WITH NCDOT STANDARD SPECIFICATIONS FOR ROADS AND STRUCTURES, NCDOT ROADWAY STANDARD DRAWINGS, AND THE CURRENT EDITON OF THE MANUAL OF UNIFORM TRAFFIC CONTROL DEVICES (MUTCD). QUANTITIES FOR THESE ITEMS HAVE BEEN ACCOUNTED FOR IN THE CONTRACT BID FORM. ALL EDGE LINES SHALL BE 2' OFF EOP.

REVISIONS

8/17/99

10-NOV-2014 12:56
G:\ENGINEERING\TOPO\NOTR\HILLFARM\HILLFARM_ddc2_pm1.dgn
$$$$USERNAME$$$$