DocuSign Envelope ID: 9562A822-FCAD-4EDC-BACB-2EEFAD26AA73

09/08/99

TIP PROJECT: U-5710A

CONTRACT: DC00277

See Sheet 1B For Conventional Symbols

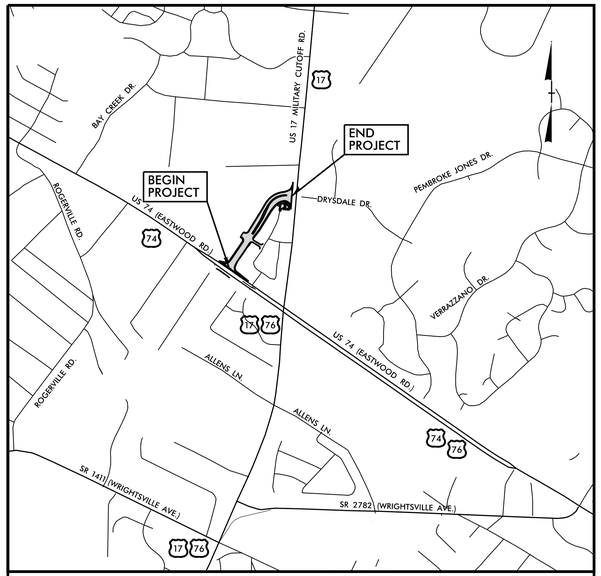

VICINITY MAP
(NOT TO SCALE)

STATE OF NORTH CAROLINA
DIVISION OF HIGHWAYS

NEW HANOVER COUNTY

STATE	STATE PROJECT REFERENCE NO.	SHEET NO.	TOTAL SHEETS
N.C.	U-5710A	1	

STATE PROJ. NO.	F. A. PROJ. NO.	DESCRIPTION
50115.1.2	N/A	P.E.
50115.2.2	N/A	ROW & UTIL.
50115.3.2	0074228	CONSTR.

LOCATION: ***FROM US–17 (MILITARY CUTOFF ROAD) AT DRYSDALE DRIVE TO US–74 (EASTWOOD ROAD). CONSTRUCT ROADWAY ON NEW LOCATION (DRYSDALE DRIVE EXT).***

TYPE OF WORK: GRADING, PAVING, DRAINAGE AND SIGNALS



NAD 83/NA 2011

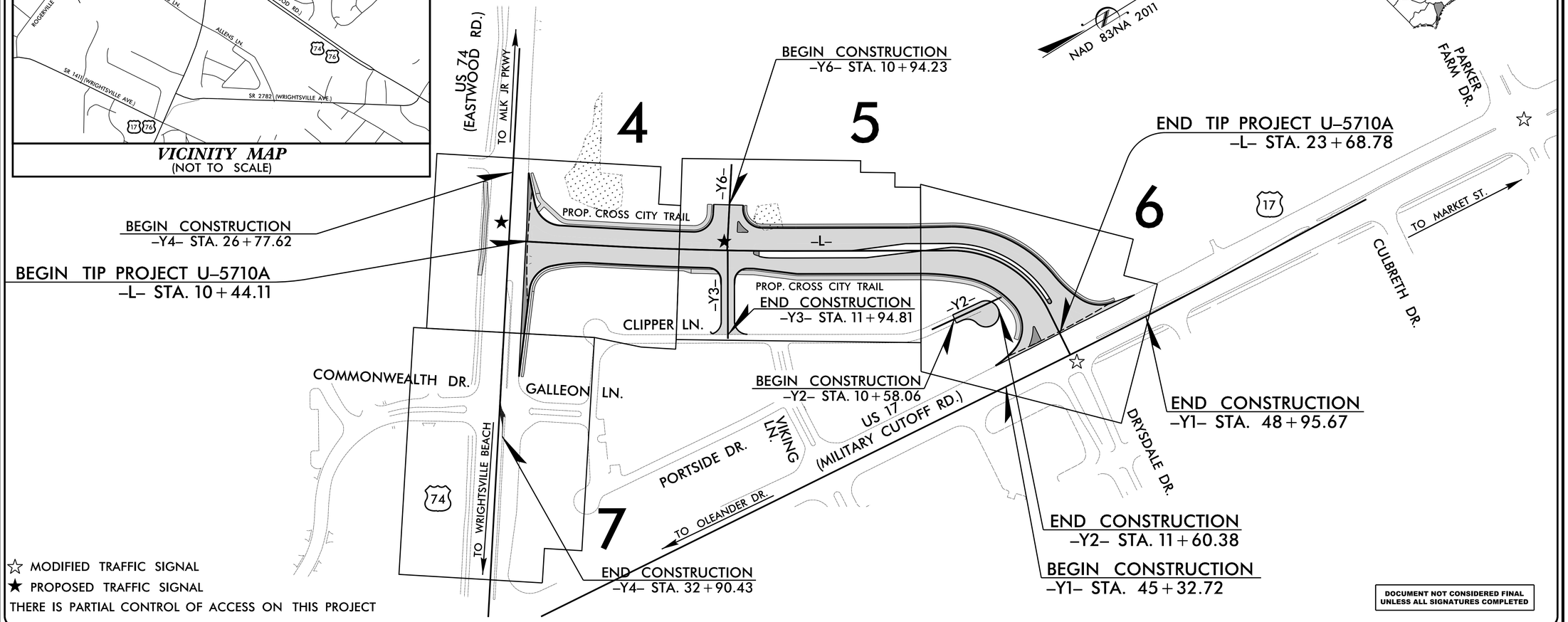

☆ MODIFIED TRAFFIC SIGNAL
★ PROPOSED TRAFFIC SIGNAL
THERE IS PARTIAL CONTROL OF ACCESS ON THIS PROJECT

DOCUMENT NOT CONSIDERED FINAL UNLESS ALL SIGNATURES COMPLETED

GRAPHIC SCALES

PLANS: 20 10 0 20 40
PROFILE (HORIZONTAL): 20 10 0 20 40
PROFILE (VERTICAL): 5 2.5 0 5 10

DESIGN DATA

ADT 2020 = 4,800
ADT 2040 = 24,000
V = 40 MPH
FUNC CLASS = URBAN COLLECTOR
STATEWIDE TIER

PROJECT LENGTH

LENGTH ROADWAY TIP PROJECT U–5710A = 0.251 MILES

TOTAL LENGTH TIP PROJECT U–5710A = 0.251 MILES

Prepared by the Office of:
HDR Engineering, Inc. of the Carolinas
555 Fayetteville St, Suite 900 Raleigh, N.C. 27601
N.C.B.E.L.S. License Number: F-0116

2018 STANDARD SPECIFICATIONS

RIGHT OF WAY DATE:
DECEMBER 11, 2018

LETTING DATE:
JANUARY 16, 2020

PHILLIP E. ROGERS, PE
PROJECT ENGINEER

CASEY E. HARRIS, PE
PROJECT DESIGN ENGINEER

MICHAEL BASS
NCDOT CONTACT

HYDRAULICS ENGINEER
NORTH CAROLINA PROFESSIONAL SEAL 042084 ENGINEER JOSHUA J. MASSROCK
12/5/2019
SIGNATURE: Joshua J. Massrock P.E.

ROADWAY DESIGN ENGINEER
NORTH CAROLINA PROFESSIONAL SEAL 040286 ENGINEER CASEY E. HARRIS
12/5/2019
SIGNATURE: Casey Harris P.E.

STATE OF NORTH CAROLINA • DEPARTMENT OF TRANSPORTATION •

PLOT DRIVER: NCDOT_pdf_color_eng_50.plt PENTABLE: NCDOT_pshpfi_conventional.tbl
USER: CHARRIS DATE: 12/5/2019 TIME: 9:40:04 AM
FILE: North_Carolina_Dept_of_Transportation\2014_16_Planning_Design_LSAU\5710_T0_4_cV06.00_Project_Engineering_and_Design\U-5710A\Roadway\Proj\U5710A_RDY_TSH.dgn

DocuSign Envelope ID: 9562A822-FCAD-4EDC-BACB-2EEFAD26AA73

8/17/99

PROJECT REFERENCE NO.	SHEET NO.
U-5710A	1A

ROADWAY DESIGN ENGINEER

SEAL 040286 ENGINEER JACKSEY E. HARRIS NORTH CAROLINA PROFESSIONAL

12/5/2019

DOCUMENT NOT CONSIDERED FINAL UNLESS ALL SIGNATURES COMPLETED

HDR Engineering, Inc. of the Carolinas
555 Fayetteville St, Suite 900 Raleigh, N.C. 27601
N.C.B.E.L.S. License Number: F-0116

2018 ROADWAY ENGLISH STANDARD DRAWINGS

EFF. 01-16-2018
REV.

INDEX OF SHEETS

SHEET NUMBER	SHEET
1	TITLE SHEET
1A	INDEX OF SHEETS, GENERAL NOTES, AND LIST OF STANDARD DRAWINGS
1B	CONVENTIONAL SYMBOLS
1C-1	CENTERLINE COORDINATE LIST
2A-1 THRU 2A-4	PAVEMENT SCHEDULE, TYPICAL SECTIONS, AND WEDGING DETAIL
2C-1	SPECIAL VALLEY GUTTER DETAIL
2C-2	TRUNCATED DOMES ON CURVED SURFACES
2C-3	MODIFIED METHOD OF CLEARING III DETAIL
2D-1 THRU 2D-4	STORMWATER POND DETAILS
3B-1	EARTHWORK AND PAVEMENT REMOVAL SUMMARIES
3D-1 THRU 3D-3	DRAINAGE SUMMARY
3G-1	GEOTECHNICAL SUMMARIES
3P-1	PARCEL INDEX SHEET
4 THRU 7	PLAN SHEETS
8 THRU 10	PROFILE SHEETS
TMP-1 THRU TMP-7	TRANSPORTATION MANAGEMENT PLANS
PMP-1 THRU PMP-9	PAVEMENT MARKING PLANS
EC-1 THRU EC-11	EROSION CONTROL PLANS
SGN-1 THRU SGN-5	SIGNING PLANS
SIG-1.0 THRU SCP-6	SIGNAL PLANS
UO-1 THRU UO-6	UTILITIES BY OTHERS PLANS
X-0	CROSS-SECTION EARTHWORK VOLUME SUMMARY
X-1 THRU X-8	CROSS-SECTIONS
W-1 THRU W-3	RETAINING WALL PLANS

The following Roadway Standards as appear in "Roadway Standard Drawings" Highway Design Branch - N. C. Department of Transportation - Raleigh, N. C., Dated January, 2018 are applicable to this project and by reference hereby are considered a part of these plans:

STD.NO.	TITLE
DIVISION 2 - EARTHWORK	
200.03	Method of Clearing - Modified Method III (Use detail in Lieu of Standard)
225.02	Guide for Grading Subgrade - Secondary and Local
225.04	Method of Obtaining Superelevation - Two Lane Pavement
DIVISION 3 - PIPE CULVERTS	
300.01	Method of Pipe Installation
DIVISION 8 - INCIDENTALS	
806.01	Concrete Right-of-Way Marker
806.02	Granite Right-of-Way Marker
815.02	Subsurface Drain
838.27	Reinforced Concrete Endwall - for Single 60" Pipe 90 Skew
838.45	Notes for Reinforced Concrete Endwall - Std. Dwg 838.21 thru 838.40
838.57	Reinforced Brick Endwall - for Single 60" Pipe 90 Skew
838.75	Notes for Reinforced Brick Endwall - Std. Dwg 838.51 thru 838.70
838.80	Precast Endwalls - 12" thru 72" Pipe 90 Skew
840.00	Concrete Base Pad for Drainage Structures
840.01	Brick Catch Basin - 12" thru 54" Pipe
840.02	Concrete Catch Basin - 12" thru 54" Pipe
840.03	Frame, Grates and Hood - for Use on Standard Catch Basin
840.25	Anchorage for Frames - Brick or Concrete or Precast
840.31	Concrete Junction Box - 12" thru 66" Pipe
840.32	Brick Junction Box - 12" thru 66" Pipe
840.34	Traffic Bearing Junction Box - for Use with Pipes 42" and Under
840.45	Precast Drainage Structure
840.46	Traffic Bearing Precast Drainage Structure
840.54	Manhole Frame and Cover
840.66	Drainage Structure Steps
846.01	Concrete Curb, Gutter and Curb & Gutter
848.01	Concrete Sidewalk
848.05	Curb Ramp - Proposed Curb & Gutter
848.06	Curb Ramp - Existing Curb & Gutter
852.01	Concrete Islands
852.05	Median Curb for Catch Basin - for Use with 1'-6" Curb and Gutter
866.01	Chain Link Fence - 4', 5' and 6' High Fence
876.01	Rip Rap in Channels
876.02	Guide for Rip Rap at Pipe Outlets

GENERAL NOTES

2018 SPECIFICATIONS
EFFECTIVE: 01-16-2018
REVISED:

GRADING AND SURFACING OR RESURFACING AND WIDENING:

THE GRADE LINES SHOWN DENOTE THE FINISHED ELEVATION OF THE PROPOSED SURFACING AT GRADE POINTS SHOWN ON THE TYPICAL SECTIONS. WHERE NO GRADE LINES ARE SHOWN, THE PROFILES SHOWN DENOTE THE TOP ELEVATION OF THE EXISTING PAVEMENT ALONG THE CENTER LINE OF SURVEY ON WHICH THE PROPOSED RESURFACING WILL BE PLACED. GRADE LINES MAY BE ADJUSTED BY THE ENGINEER IN ORDER TO SECURE A PROPER TIE-IN.

CLEARING:

CLEARING ON THIS PROJECT SHALL BE PERFORMED TO THE LIMITS ESTABLISHED BY MODIFIED METHOD III.

SUPERELEVATION:

ALL CURVES ON THIS PROJECT SHALL BE SUPERELEVATED IN ACCORDANCE WITH STD. NO. 225.04 USING THE RATE OF SUPERELEVATION AND RUNOFF SHOWN ON THE PLANS. SUPERELEVATION IS TO BE REVOLVED ABOUT THE GRADE POINTS SHOWN ON THE TYPICAL SECTIONS.

SIDE ROADS:

THE CONTRACTOR WILL BE REQUIRED TO DO ALL NECESSARY WORK TO PROVIDE SUITABLE CONNECTIONS WITH ALL ROADS, STREETS, AND DRIVES ENTERING THIS PROJECT. THIS WORK WILL BE PAID FOR AT THE CONTRACT UNIT PRICE FOR THE PARTICULAR ITEMS INVOLVED.

SUBSURFACE DRAINS:

SUBSURFACE DRAINS SHALL BE CONSTRUCTED IN ACCORDANCE WITH STD. NO. 815.02 AT LOCATIONS DIRECTED BY THE ENGINEER.

TEMPORARY SHORING:

SHORING REQUIRED FOR THE MAINTENANCE OF TRAFFIC WILL BE PAID FOR AS "EXTRA WORK" IN ACCORDANCE WITH SECTION 104-7.

UTILITIES:

UTILITY OWNERS ON THIS PROJECT ARE DUKE ENERGY DISTRIBUTION,

AT&T, PIEDMONT NATURAL GAS, SPECTRUM, SEGRA, LEVEL 3 / CENTURYLINK

& THE CITY OF WILMINGTON

ANY RELOCATION OF EXISTING UTILITIES WILL BE ACCOMPLISHED BY OTHERS.

RIGHT-OF-WAY MARKERS:

ALL RIGHT-OF-WAY MARKERS ON THIS PROJECT SHALL BE PLACED BY CONTRACT.

CURB RAMPS

CURB RAMPS ARE SHOWN ON THE PLANS AT APPROXIMATE LOCATIONS.
CONSTRUCT ALL CURB RAMPS ACCORDANCE WITH STD 848.05 and/or 848.06.

REVISIONS

PLOT DRIVER: NCDOT_pdf_color_eng_50.plt PENTABLE: NCDOT_pshpfl_conventional.tbl
USER: CHARRIS DATE: 12/5/2019 TIME: 10:22:55 AM
FILE: North_Carolina_Dept_of_Transportation\2014_16_Planning _Design_LSA\U_5710_TO_4_c\06.00_Project_Engineering_and_Design\U-5710A\Roadway\Proj\U5710A_RDY_TSH.dgn

STATE OF NORTH CAROLINA, DIVISION OF HIGHWAYS

CONVENTIONAL PLAN SHEET SYMBOLS

Note: Not to Scale **S.U.E. = Subsurface Utility Engineering*

BOUNDARIES AND PROPERTY:

- State Line
- County Line
- Township Line
- City Line
- Reservation Line
- Property Line
- Existing Iron Pin (EIP)
- Computed Property Corner
- Property Monument (ECM)
- Parcel/Sequence Number (123)
- Existing Fence Line
- Proposed Woven Wire Fence
- Proposed Chain Link Fence
- Proposed Barbed Wire Fence
- Existing Wetland Boundary (WLB)
- Proposed Wetland Boundary (WLB)
- Existing Endangered Animal Boundary (EAB)
- Existing Endangered Plant Boundary (EPB)
- Existing Historic Property Boundary (HPB)
- Known Contamination Area: Soil (S)
- Potential Contamination Area: Soil (S)
- Known Contamination Area: Water (W)
- Potential Contamination Area: Water (W)
- Contaminated Site: Known or Potential

BUILDINGS AND OTHER CULTURE:

- Gas Pump Vent or U/G Tank Cap
- Sign (S)
- Well (W)
- Small Mine
- Foundation
- Area Outline
- Cemetery (†)
- Building
- School
- Church
- Dam

HYDROLOGY:

- Stream or Body of Water
- Hydro, Pool or Reservoir
- Jurisdictional Stream (JS)
- Buffer Zone 1 (BZ 1)
- Buffer Zone 2 (BZ 2)
- Flow Arrow
- Disappearing Stream
- Spring
- Wetland
- Proposed Lateral, Tail, Head Ditch (FLOW)
- False Sump

RAILROADS:

- Standard Gauge (CSX TRANSPORTATION)
- RR Signal Milepost (MILEPOST 35)
- Switch (SWITCH)
- RR Abandoned
- RR Dismantled

RIGHT OF WAY & PROJECT CONTROL:

- Secondary Horiz and Vert Control Point
- Primary Horiz Control Point
- Primary Horiz and Vert Control Point
- Exist Permanent Easement Pin and Cap
- New Permanent Easement Pin and Cap
- Vertical Benchmark
- Existing Right of Way Marker
- Existing Right of Way Line
- New Right of Way Line (RW)
- New Right of Way Line with Pin and Cap (RW)
- New Right of Way Line with Concrete or Granite R/W Marker (RW)
- New Control of Access Line with Concrete C/A Marker (CA)
- Existing Control of Access (CA)
- New Control of Access (CA)
- Existing Easement Line (E)
- New Temporary Construction Easement (E)
- New Temporary Drainage Easement (TDE)
- New Permanent Drainage Easement (PDE)
- New Permanent Drainage / Utility Easement (DUE)
- New Permanent Utility Easement (PUE)
- New Temporary Utility Easement (TUE)
- New Aerial Utility Easement (AUE)

ROADS AND RELATED FEATURES:

- Existing Edge of Pavement
- Existing Curb
- Proposed Slope Stakes Cut (C)
- Proposed Slope Stakes Fill (F)
- Proposed Curb Ramp (CR)
- Existing Metal Guardrail
- Proposed Guardrail
- Existing Cable Guiderail
- Proposed Cable Guiderail
- Equality Symbol
- Pavement Removal

VEGETATION:

- Single Tree
- Single Shrub
- Hedge
- Woods Line
- Orchard
- Vineyard

EXISTING STRUCTURES:

MAJOR:

- Bridge, Tunnel or Box Culvert (CONC)
- Bridge Wing Wall, Head Wall and End Wall (CONC WW)

MINOR:

- Head and End Wall (CONC HW)
- Pipe Culvert
- Footbridge
- Drainage Box: Catch Basin, DI or JB (CB)
- Paved Ditch Gutter
- Storm Sewer Manhole (S)
- Storm Sewer (S)

UTILITIES:

POWER:

- Existing Power Pole
- Proposed Power Pole
- Existing Joint Use Pole
- Proposed Joint Use Pole
- Power Manhole (P)
- Power Line Tower
- Power Transformer
- U/G Power Cable Hand Hole
- H-Frame Pole
- U/G Power Line LOS B (S.U.E.*) (P)
- U/G Power Line LOS C (S.U.E.*) (P)
- U/G Power Line LOS D (S.U.E.*) (P)

TELEPHONE:

- Existing Telephone Pole
- Proposed Telephone Pole
- Telephone Manhole (T)
- Telephone Pedestal (T)
- Telephone Cell Tower
- U/G Telephone Cable Hand Hole (HH)
- U/G Telephone Cable LOS B (S.U.E.*) (T)
- U/G Telephone Cable LOS C (S.U.E.*) (T)
- U/G Telephone Cable LOS D (S.U.E.*) (T)
- U/G Telephone Conduit LOS B (S.U.E.*) (TC)
- U/G Telephone Conduit LOS C (S.U.E.*) (TC)
- U/G Telephone Conduit LOS D (S.U.E.*) (TC)
- U/G Fiber Optics Cable LOS B (S.U.E.*) (T FO)
- U/G Fiber Optics Cable LOS C (S.U.E.*) (T FO)
- U/G Fiber Optics Cable LOS D (S.U.E.*) (T FO)

WATER:

- Water Manhole (W)
- Water Meter
- Water Valve
- Water Hydrant
- U/G Water Line LOS B (S.U.E*) (W)
- U/G Water Line LOS C (S.U.E*) (W)
- U/G Water Line LOS D (S.U.E*) (W)
- Above Ground Water Line (A/G Water)

TV:

- TV Pedestal (C)
- TV Tower
- U/G TV Cable Hand Hole (HH)
- U/G TV Cable LOS B (S.U.E.*) (TV)
- U/G TV Cable LOS C (S.U.E.*) (TV)
- U/G TV Cable LOS D (S.U.E.*) (TV)
- U/G Fiber Optic Cable LOS B (S.U.E.*) (TV FO)
- U/G Fiber Optic Cable LOS C (S.U.E.*) (TV FO)
- U/G Fiber Optic Cable LOS D (S.U.E.*) (TV FO)

GAS:

- Gas Valve
- Gas Meter
- U/G Gas Line LOS B (S.U.E.*) (G)
- U/G Gas Line LOS C (S.U.E.*) (G)
- U/G Gas Line LOS D (S.U.E.*) (G)
- Above Ground Gas Line (A/G Gas)

SANITARY SEWER:

- Sanitary Sewer Manhole
- Sanitary Sewer Cleanout
- U/G Sanitary Sewer Line (SS)
- Above Ground Sanitary Sewer (A/G Sanitary Sewer)
- SS Forced Main Line LOS B (S.U.E.*) (FSS)
- SS Forced Main Line LOS C (S.U.E.*) (FSS)
- SS Forced Main Line LOS D (S.U.E.*) (FSS)

MISCELLANEOUS:

- Utility Pole
- Utility Pole with Base
- Utility Located Object
- Utility Traffic Signal Box (S)
- Utility Unknown U/G Line LOS B (S.U.E.*) (?UTL)
- U/G Tank; Water, Gas, Oil
- Underground Storage Tank, Approx. Loc. (UST)
- A/G Tank; Water, Gas, Oil
- Geoenvironmental Boring
- U/G Test Hole LOS A (S.U.E.*)
- Abandoned According to Utility Records (AATUR)
- End of Information (E.O.I.)

12/2/2016
PLOT DRIVER: NCDOT.pdf.color_eng.50.plt
USER: CHARRIS
FILE: North_Carolina_Dept_of_Transportation\2014.16_Planning_Design_LSA\U-5710_TO_4.c\06.00_Project_Engineering_and_Design\U-5710A\Roadway\Proj\U5710A_RDY_TSH.dgn
PENTABLE: NCDOT_pshpfi_conventional.tbl
DATE: 11/18/2019
TIME: 1:21:57 PM

PROJ. REFERENCE NO.	SHEET NO.
U-5710A	1C-1

STATE OF NORTH CAROLINA
DIVISION OF HIGHWAYS

CENTERLINE COORDINATE LIST

Point #	Chain	Station	Northing (Y)	Easting (X)
1	L	10+50.00	176539.9723	2353057.4657
2	L	11+00.00	176580.9846	2353086.0662
3	L	11+50.00	176621.9969	2353114.6668
4	L	12+00.00	176663.0092	2353143.2673
5	L	12+50.00	176704.0262	2353171.8612
6	L	13+00.00	176745.1755	2353200.2640
7	L	13+50.00	176786.5133	2353228.3920
8	L	14+00.00	176828.0377	2353256.2437
9	L	14+50.00	176869.7468	2353283.8179
10	L	15+00.00	176911.6388	2353311.1135
11	L	15+50.00	176953.7119	2353338.1292
12	L	16+00.00	176995.9641	2353364.8639
13	L	16+50.00	177038.3936	2353391.3162
14	L	17+00.00	177080.9686	2353417.5339
15	L	17+50.00	177123.5587	2353443.7272
16	L	18+00.00	177166.1487	2353469.9205
17	L	18+50.00	177208.7387	2353496.1138
18	L	19+00.00	177251.3288	2353522.3071
19	L	19+50.00	177293.9188	2353548.5004
20	L	20+00.00	177336.5088	2353574.6937
21	L	20+50.00	177378.7231	2353601.4654
22	L	21+00.00	177416.0634	2353634.5921
23	L	21+50.00	177446.0781	2353674.4769
24	L	22+00.00	177467.5707	2353719.5296
25	L	22+50.00	177479.6842	2353767.9542
26	L	23+00.00	177481.9359	2353817.8201
27	L	23+50.00	177477.3438	2353867.6063
28	L	24+00.00	177472.5386	2353917.3748

Point #	Chain	Station	Northing (Y)	Easting (X)

Point #	Chain	Station	Northing (Y)	Easting (X)

Point #	Chain	Station	Northing (Y)	Easting (X)

Point #	Chain	Station	Northing (Y)	Easting (X)

DocuSign Envelope ID: FD539006-D867-4C1C-B1DE-F5E87FCCAD06

6/2/99

PROJECT REFERENCE NO.	SHEET NO.
U-5710A	2A-1

ROADWAY DESIGN ENGINEER	PAVEMENT DESIGN ENGINEER
NORTH CAROLINA PROFESSIONAL SEAL 040296 ENGINEER CASEY E HARRIS 11/25/2019	NORTH CAROLINA PROFESSIONAL SEAL 040296 ENGINEER ANDREW D. WARGO 11/26/2019

DOCUMENT NOT CONSIDERED FINAL UNLESS ALL SIGNATURES COMPLETED

HDR Engineering, Inc. of the Carolinas
555 Fayetteville St, Suite 900 Raleigh, N.C. 27601
N.C.B.E.L.S. License Number: F-0116

PAVEMENT SCHEDULE

C1	PROP. APPROX. 1½″ ASPHALT CONCRETE SURFACE COURSE, TYPE S9.5B, AT AN AVERAGE RATE OF 165 LBS. PER SQ. YD.	R1	1′-6″ CONCRETE CURB AND GUTTER.
C2	PROP. APPROX. 3″ ASPHALT CONCRETE SURFACE COURSE, TYPE S9.5B, AT AN AVERAGE RATE OF 165 LBS. PER SQ. YD. IN EACH OF TWO LAYERS.	R2	2′-6″ CONCRETE CURB AND GUTTER.
C3	PROP. VAR. DEPTH ASPHALT CONCRETE SURFACE COURSE, TYPE S9.5B, AT AN AVERAGE RATE OF 110 LBS. PER SQ. YD. PER 1″ DEPTH, TO BE PLACED IN LAYERS NOT LESS THAN 1″ IN DEPTH OR GREATER THAN 1½″ IN DEPTH.	R3	SPECIAL VALLEY GUTTER (SEE DETAIL 2C-1).
D1	PROP. APPROX. 4″ ASPHALT CONCRETE INTERMEDIATE COURSE, TYPE I19.0C, AT AN AVERAGE RATE OF 456 LBS. PER SQ. YD.	S	4″ CONCRETE SIDEWALK.
D2	PROP. VAR. DEPTH ASPHALT CONCRETE INTERMEDIATE COURSE, TYPE I19.0C, AT AN AVERAGE RATE OF 114 LBS. PER SQ. YD. PER 1″ DEPTH, TO BE PLACED IN LAYERS NOT LESS THAN 2½″ IN DEPTH OR GREATER THAN 4″ IN DEPTH.	T	EARTH MATERIAL.
E1	PROP. APPROX. 4″ ASPHALT CONCRETE BASE COURSE, TYPE B25.0C, AT AN AVERAGE RATE OF 456 LBS. PER SQ. YD.	U	EXISTING PAVEMENT.
J1	PROP. 6″ AGGREGATE BASE COURSE.	W	VARIABLE DEPTH ASPHALT PAVEMENT (SEE WEDGING DETAIL).

NOTE: PAVEMENT EDGE SLOPES ARE 1:1 UNLESS SHOWN OTHERWISE.

NOTE: CLEAN UP AND RE-GRADE EXISTING PAVEMENT SHOULDER EDGE FROM –Y1– STA. 48+95.67 LT TO –Y1– STA. 58+31.52 LT.

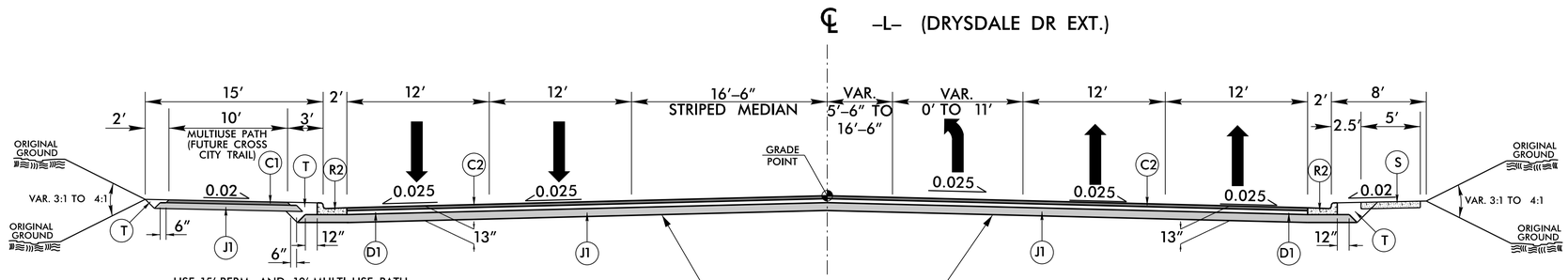

USE 15′ BERM AND 10′ MULTI-USE PATH IN THE FOLLOWING LOCATIONS:
–L– STA. 10+44.11 LT TO –L– STA. 14+73.13 LT
–L– STA. 14+29.09 RT TO –L– STA. 15+12.47 RT

TYPICAL SECTION NO.1

USE TYPICAL SECTION NO. 1
–L– STA. 10+44.11 TO –L– STA. 15+12.47

USE 8′ BERM AND 5′ SIDEWALK IN THE FOLLOWING LOCATIONS:
–L– STA. 10+44.11 TO –L– STA. 14+29.09 RT

REVISIONS

PLOT DRIVER: NCDOT_pdf_color-eng_50.plt PENTABLE: NCDOT_pshpfl_conventional.tbl
USER: CHARRIS DATE: 11/25/2019 TIME: 3:32:18 PM
FILE: North_Carolina_Dept_of_Transportation\2014_16_Planning_-Design_LSA\U_5710_TO_4_c\06.00_Project_Engineering_and_Design\U-5710A\Roadway\Proj\U5710A_RDY_TYP.dgn

DocuSign Envelope ID: FD539006-D867-4C1C-B1DE-F5E87FCCAD06

PROJECT REFERENCE NO.	SHEET NO.
U–5710A	2A–2

ROADWAY DESIGN ENGINEER

NORTH CAROLINA PROFESSIONAL SEAL 040256 ENGINEER CASEY E HARRIS

11/25/2019

PAVEMENT DESIGN ENGINEER

NORTH CAROLINA PROFESSIONAL SEAL ENGINEER ANDREW D. WARGO

11/26/2019

DOCUMENT NOT CONSIDERED FINAL UNLESS ALL SIGNATURES COMPLETED

HDR Engineering, Inc. of the Carolinas
555 Fayetteville St, Suite 900 Raleigh, N.C. 27601
N.C.B.E.L.S. License Number: F-0116

–L– (DRYSDALE DR EXT.)

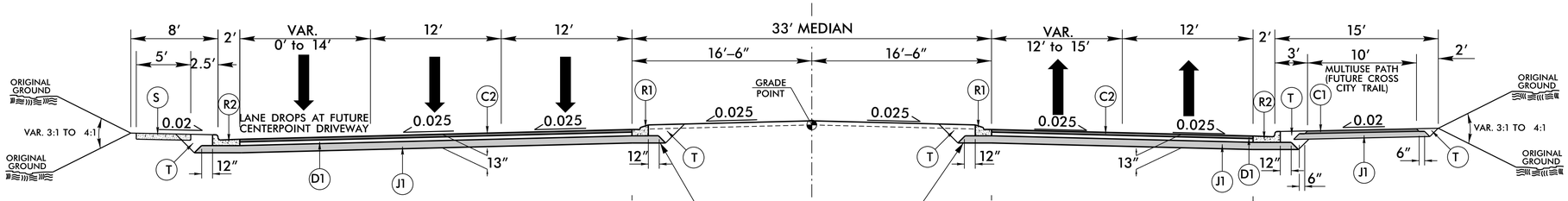

TYPICAL SECTION NO. 2

USE TYPICAL SECTION NO. 2
–L– STA. 15+12.47 TO –L– STA. 23+68.78

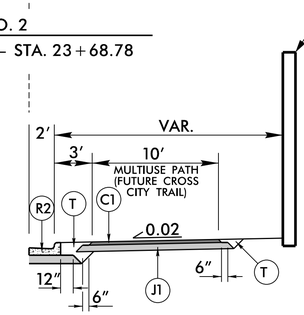

PRIVACY WALL DETAIL
USE IN CONJUCTION WITH TYPICAL SECTION NO. 2

USE PRIVACY WALL DETAIL
–L– STA. 19+88.19 TO –L– STA. 23+59.79

–L– (DRYSDALE DR EXT.)

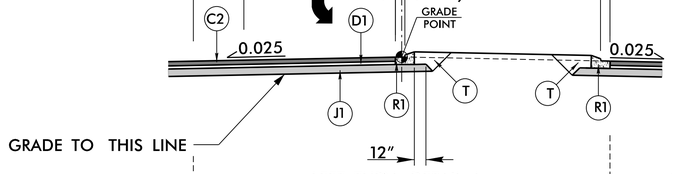

LEFT TURN DETAIL A
USE IN CONJUCTION WITH TYPICAL SECTION NO. 2

USE LEFT TURN DETAIL A
–L– STA. 15+60.00 TO –L– STA. 19+25.00

–L– (DRYSDALE DR EXT.)

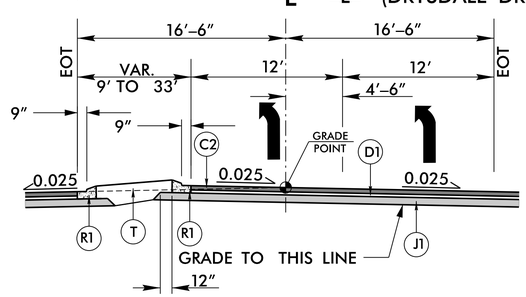

LEFT TURN DETAIL B
USE IN CONJUCTION WITH TYPICAL SECTION NO. 2

USE LEFT TURN DETAIL B
–L– STA. 18+33.48 TO –L– STA. 22+97.89

PAVEMENT SCHEDULE	
C1	1.5″ S9.5B
C2	3″ S9.5B
C3	VAR. S9.5B
D1	4″ I19.0C
D2	VAR. I19.0C
E1	4″ B25.0C
J1	6″ ABC
R1	1′-6″ CURB & GUTTER
R2	2′-6″ CURB & GUTTER
R3	SPECIAL VALLEY GUTTER
S	4″ CONC. SIDEWALK
T	EARTH MATERIAL
U	EXIST. PAVEMENT
W	VAR. DEPTH ASPHALT

REVISIONS

6/2/99

PLOT DRIVER: NCDOT_pdf_color_eng_50.plt PENTABLE: NCDOT_pshpfl_conventional.tbl
USER: CHARRIS DATE: 11/25/2019 TIME: 3:32:15 PM
FILE: North_Carolina_Dept_of_Transportation\2014.16_Planning_Design_LSAU_5710_TO_4_cv06.00_Project_Engineering_and_Design\U-5710A_Roadway\Proj\U5710A_RDY_TYP.dgn

DocuSign Envelope ID: FD539006-D867-4C1C-B1DE-F5E87FCCAD06

PROJECT REFERENCE NO.	SHEET NO.
U-5710A	2A-3

ROADWAY DESIGN ENGINEER — NORTH CAROLINA PROFESSIONAL SEAL 049286 ENGINEER CASEY E. HARRIS — 11/25/2019

PAVEMENT DESIGN ENGINEER — NORTH CAROLINA PROFESSIONAL SEAL 044399 ENGINEER ANDREW D. WARGO — 11/26/2019

DOCUMENT NOT CONSIDERED FINAL UNLESS ALL SIGNATURES COMPLETED

HDR Engineering, Inc. of the Carolinas
555 Fayetteville St, Suite 900 Raleigh, N.C. 27601
N.C.B.E.L.S. License Number: F-0116

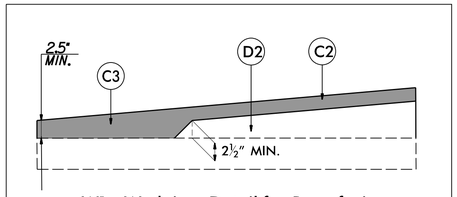

W1: Wedging Detail for Resurfacing

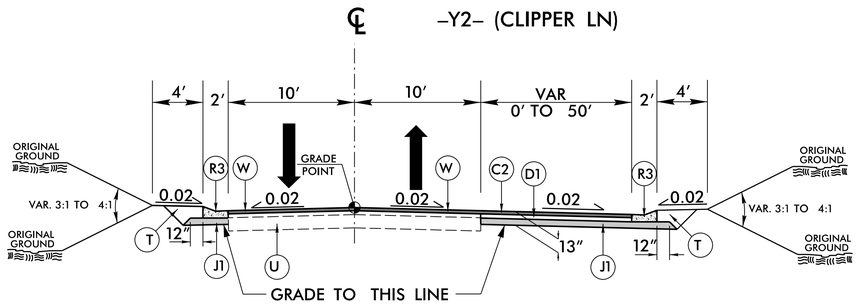

TYPICAL SECTION NO. 3
CLIPPER LANE CUL-DE-SAC

USE TYPICAL SECTION NO. 3
-Y2- STA. 10+58.06 TO -Y2- STA. 11+59.38

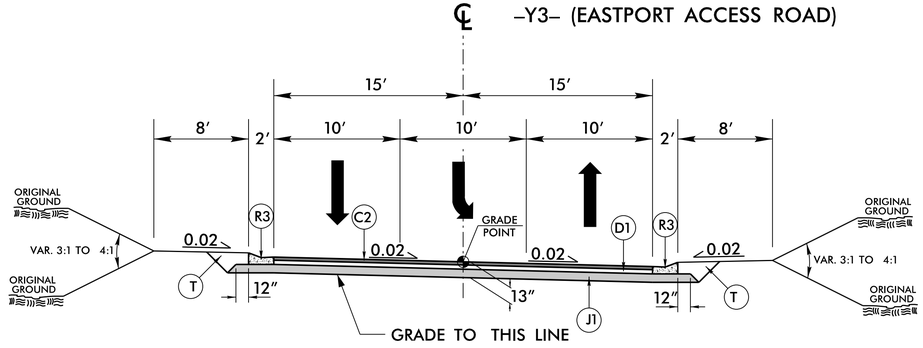

TYPICAL SECTION NO. 4

USE TYPICAL SECTION NO. 4
-Y3- STA. 10+40.51 TO -Y3- STA. 11+94.81

NOTE: TRANSITION 2'-6" C&G TO SPECIAL VALLEY GUTTER FROM -Y3- STA. 10+72.00 TO 10+82.00 LT&RT.

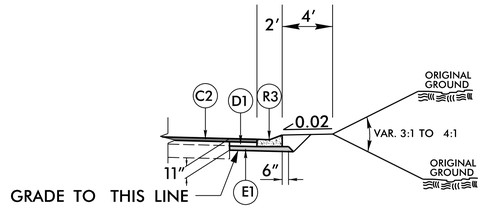

ALTERNATE NARROW WIDENING DETAIL

OPTIONAL 4" B25.0C TO BE USED IN LIEU OF ABC AT THE DISCRETION OF THE ENGINEER.

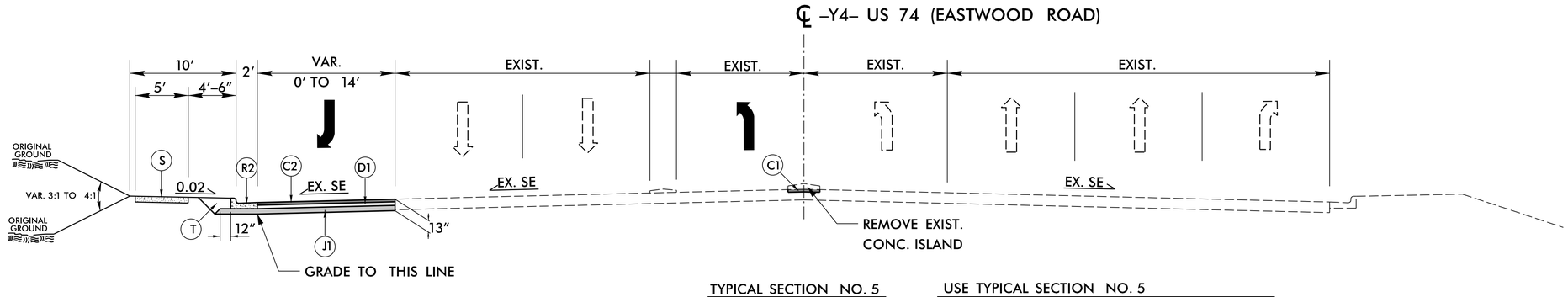

TYPICAL SECTION NO. 5

USE TYPICAL SECTION NO. 5
-Y4- STA. 29+50.83 TO -Y4- STA. 32+90.43

PAVEMENT SCHEDULE	
C1	1.5" S9.5B
C2	3" S9.5B
C3	VAR. S9.5B
D1	4" I19.0C
D2	VAR. I19.0C
E1	4" B25.0C
J1	6" ABC
R1	1'-6" CURB & GUTTER
R2	2'-6" CURB & GUTTER
R3	SPECIAL VALLEY GUTTER
S	4" CONC. SIDEWALK
T	EARTH MATERIAL
U	EXIST. PAVEMENT
W	VAR. DEPTH ASPHALT

REVISIONS

6/2/99

PLOT DRIVER: NCDOT_pdf_color_eng_50.plt PENTABLE: NCDOT_pshpfl_conventional.tbl
USER: CHARRIS DATE: 11/25/2019 TIME: 4:33:48 PM
FILE: North_Carolina_Dept_of_Transportation\2014_16_Planning _Design_LSA\U_5710_TO_4_c\06.00_Project_Engineering_and_Design\U-5710A\Roadway\Proj\U5710A_RDY_TYP.dgn

DocuSign Envelope ID: FD539006-D867-4C1C-B1DE-F5E87FCCAD06

PROJECT REFERENCE NO.	SHEET NO.
U-5710A	2A-4

ROADWAY DESIGN ENGINEER
NORTH CAROLINA PROFESSIONAL SEAL 049286 ENGINEER CASEY E. HARRIS
11/25/2019

PAVEMENT DESIGN ENGINEER
NORTH CAROLINA PROFESSIONAL SEAL 044560 ENGINEER ANDREW D. WARGO
11/26/2019

DOCUMENT NOT CONSIDERED FINAL UNLESS ALL SIGNATURES COMPLETED

HDR Engineering, Inc. of the Carolinas
555 Fayetteville St, Suite 900 Raleigh, N.C. 27601
N.C.B.E.L.S. License Number: F-0116

℄ -Y4- US 74 (EASTWOOD ROAD)

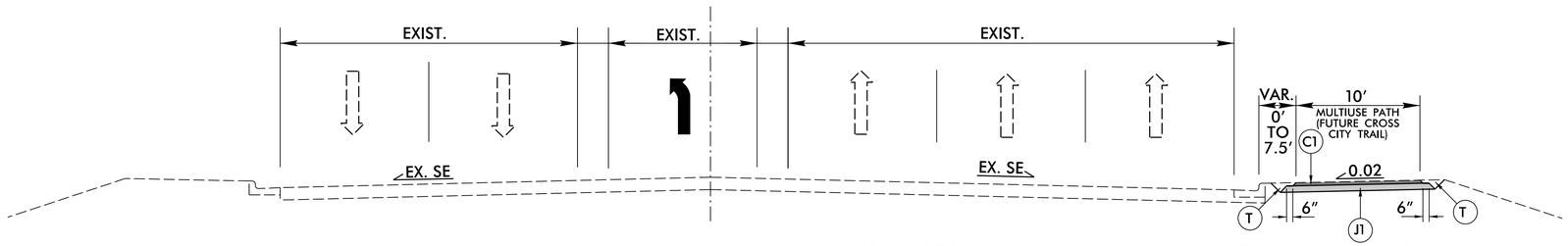

TYPICAL SECTION NO. 6

USE TYPICAL SECTION NO. 6
-Y4- STA. 27+03.55 TO -Y4- STA. 29+20.00

℄ -Y6- (CENTERPOINTE DRIVEWAY)

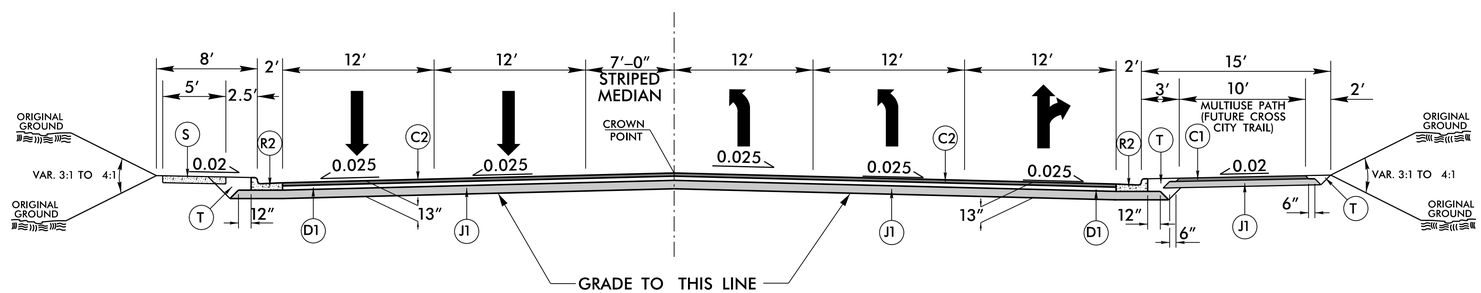

TYPICAL SECTION NO. 7

USE TYPICAL SECTION NO. 7
-Y6- STA. 10+94.23 TO -Y6- STA. 11+52.97

PAVEMENT SCHEDULE

C1	1.5" S9.5B
C2	3" S9.5B
C3	VAR. S9.5B
D1	4" I19.0C
D2	VAR. I19.0C
E1	4" B25.0C
J1	6" ABC
R1	1'-6" CURB & GUTTER
R2	2'-6" CURB & GUTTER
R3	SPECIAL VALLEY GUTTER
S	4" CONC. SIDEWALK
T	EARTH MATERIAL
U	EXIST. PAVEMENT
W	VAR. DEPTH ASPHALT

REVISIONS

6/2/99

PLOT DRIVER: NCDOT_pdf_color_eng_50.plt PENTABLE: NCDOT_pshpfl_conventional.tbl
USER: CHARRIS DATE: 11/25/2019 TIME: 3:32:17 PM
FILE: North_Carolina_Dept_of_Transportation\2014_16_Planning _Design_LSA\U_5710_TO_4_c\06.00_Project_Engineering_and_Design\U-5710A\Roadway\Proj\U5710A_RDY_TYP.dgn

PROJECT REFERENCE NO.	SHEET NO.
U-5710A	2C-1

HDR Engineering, Inc. of the Carolinas
555 Fayetteville St. Suite 900 Raleigh, N.C. 27601
N.C.B.E.L.S. License Number: F-0116

OBLIQUE VIEW
VERTICAL CURB AND GUTTER

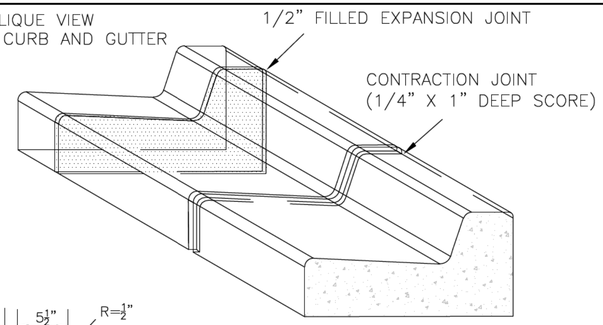

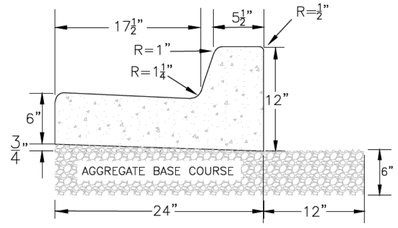

VERTICAL CURB AND GUTTER

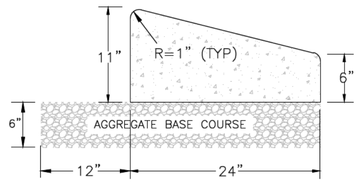

SLOPE CURB

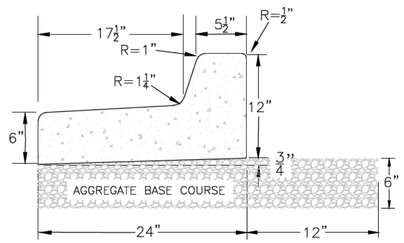

MEDIAN VERTICAL CURB AND GUTTER

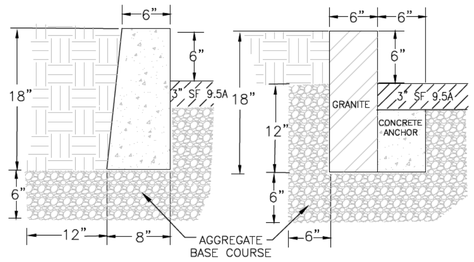

VERTICAL CURB

GRANITE CURB

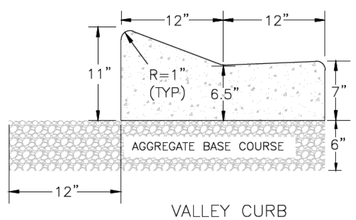

VALLEY CURB

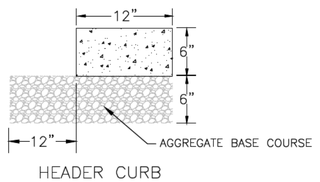

HEADER CURB

NOTES: 1. EXPANSION JOINT MATERIAL TO COMPLY WITH CURRENT NCDOT STANDARDS
2. 50' MAX EXPANSION JOINT SPACING, 10' MAX CONTRACTION JOINT SPACING
3. MINIMUM INSTALLATION LENGTH IS 5 FT.
4. CONCRETE TO BE 3000 PSI MIN
5. VERTICAL CURB AND GUTTER BASE CAN BE SLOPED 3/4" OR USE A FLAT BASE

STANDARD DETAIL

DATE: AUGUST, 2011

DRAWN: PB/JSR

CHECKED: DEC

SCALE NOT TO SCALE

CURBING

CITY OF WILMINGTON
NORTH CAROLINA
CITY OF WILMINGTON ENGINEERING
PO BOX 1810
WILMINGTON N.C. 28402
(910) 341-7807

SD 3-11

NOTE: ONLY USE VALLEY CURB DIMENSIONS FOR PLACEMENT OF SPECIAL VALLEY GUTTER. ALL OTHER CURBS SHALL BE PLACED BY NCDOT STD. 846.01.

REVISIONS

PLOT DRIVER: NCDOT_pdf_color_eng_50.plt PENTABLE: NCDOT_pshpfl_conventional.tbl
USER: CHARRIS DATE: 11/18/2019 TIME: 1:22:37 PM
FILE: North_Carolina_Dept_of_Transportation\2014_16_Planning _Design_LSA\U_5710_TO_4_c\06_00_Project_Engineering_and_Design\U-57

PROJECT REFERENCE NO.	SHEET NO.
U-5710A	2C-2

HDR Engineering, Inc. of the Carolinas
555 Fayetteville St. Suite 900 Raleigh, N.C. 27601
N.C.B.E.L.S. License Number: F-0116

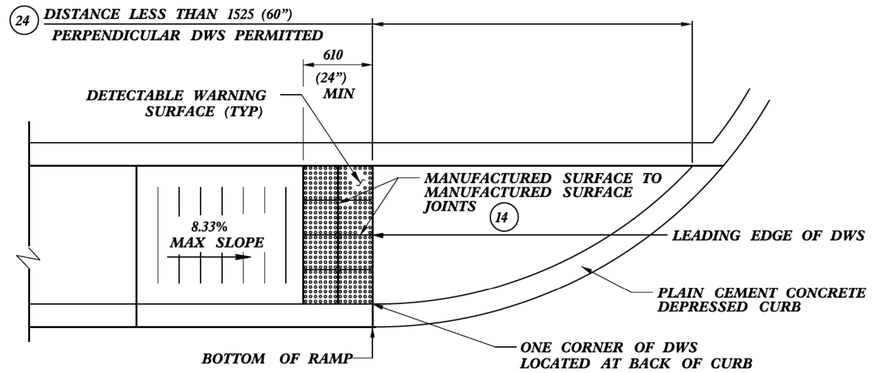

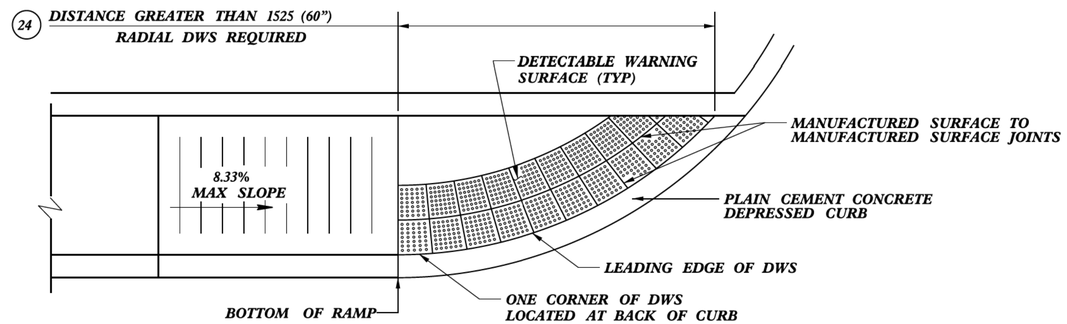

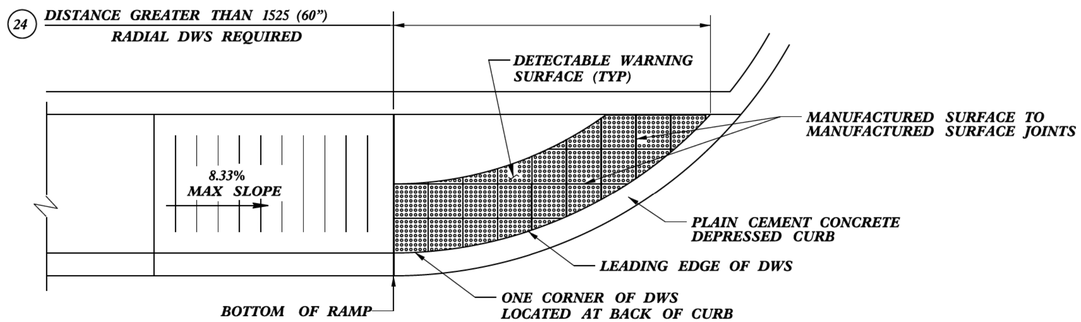

DETECTABLE WARNING SURFACE (DWS) ON CURVED SURFACES

REVISIONS

PLOT DRIVER: NCDOT_pdf_color_eng_50.plt
USER: CHARRIS
FILE: North_Carolina_Dept_of_Transportation\2014_16_Planning _Design_LSA\U_5710_TO_4_c\06_00_Project_Engineering_and_Design\U-5710A_Roadway\Proj\U5710A_RDY_PSH_2C-2.dgn
PENTABLE: NCDOT_pshpfl_conventional.tbl
DATE: 11/18/2019
TIME: 1:22:52 PM

DocuSign Envelope ID: 616F2EEF-EE65-45E5-A032-EE01B0061212

5/14/99

PROJECT REFERENCE NO.	SHEET NO.
U-5710A	2C-3

STATE OF
NORTH CAROLINA
DEPT. OF TRANSPORTATION
DIVISION OF HIGHWAYS
RALEIGH, N.C.

ENGLISH DETAIL DRAWING FOR
METHOD OF CLEARING
MODIFIED METHOD - III

SHEET 1 OF 1
200D03

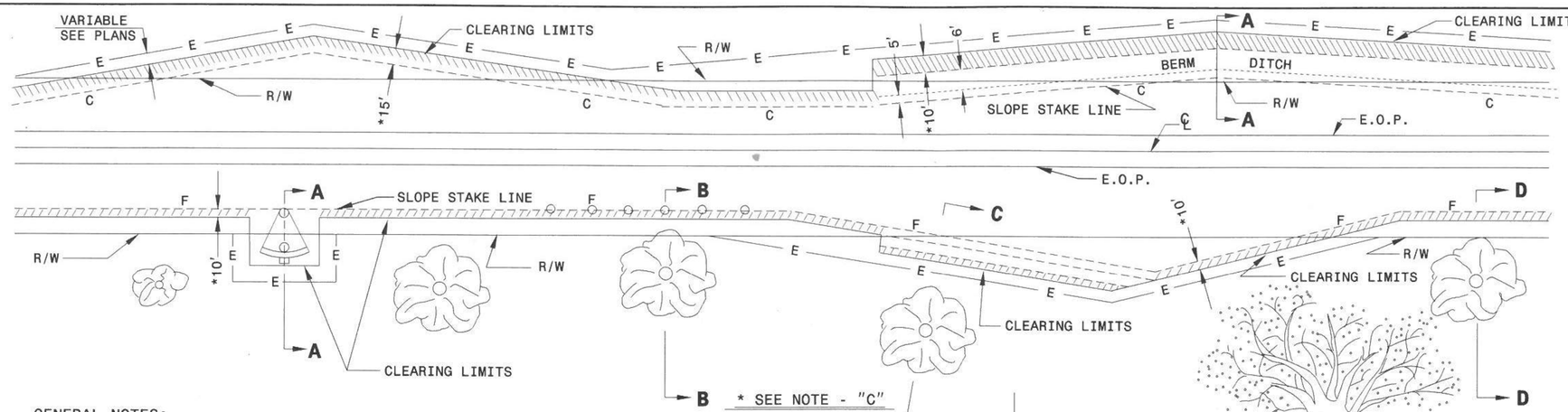

GENERAL NOTES:

1. REMOVE TREES OUTSIDE THE CLEARING LIMIT WHEN, IN THE OPINION OF THE ENGINEER, THE UTILITY OF A TREE WILL BE DESTROYED BY THE CONSTRUCTION OR THE CLEARING OPERATION.
2. CLEAR IN ACCORDANCE WITH THIS STANDARD EXCEPT WHERE ADDITIONAL CLEARING IS REQUIRED FOR SAFETY AS SHOWN ON THE PLANS.

METHOD III CLEARING LIMITS

(A) CUTS -- CLEAR TO CONSTRUCTION LIMITS.
(B) FILLS - CLEAR TO 5'/10' * BEYOND CONSTRUCTION LIMITS, UNLESS SPECIFIED OTHERWISE BY WETLAND PERMIT.
(C) CUTS AND FILLS - WHEN THE CLEARING LIMITS (A AND B) EXCEED THE PROPOSED R/W OR PROPOSED CONSTRUCTION EASEMENTS, THEN CLEAR ONLY TO THE R/W OR CONSTRUCTION EASEMENT WHICHEVER IS GREATER.

* FOR FILL HEIGHTS LESS THAN 10' CLEAR TO 5' BEYOND CONSTRUCTION LIMITS.
* FOR FILL HEIGHTS 10' OR GREATER CLEAR TO 10' BEYOND CONSTRUCTION LIMITS.
** PLACE SILT FENCE AT 5' BEYOND TOE OF SLOPE IN FILL SECTIONS WITH LESS THAN 10'. PLACE SILT FENCE AT 10' BEYOND TOE OF SLOPE IN FILL SECTIONS WITH 10' OR GREATER.

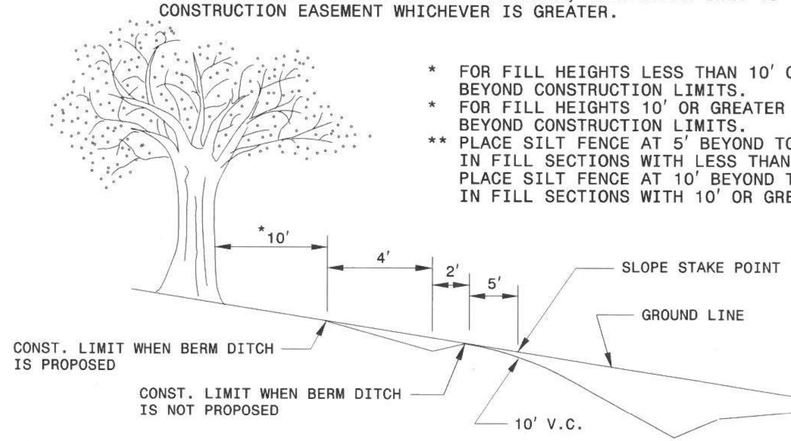

SECTION A-A

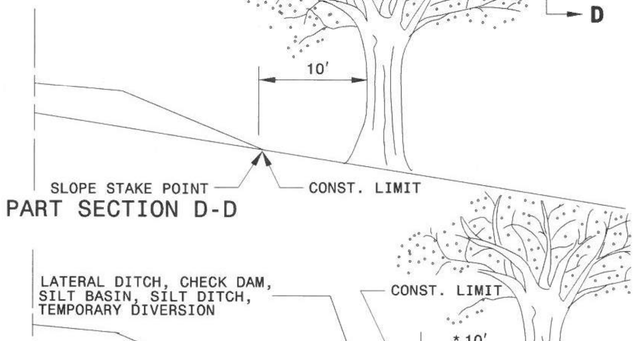

PART SECTION D-D



PART SECTION C-C

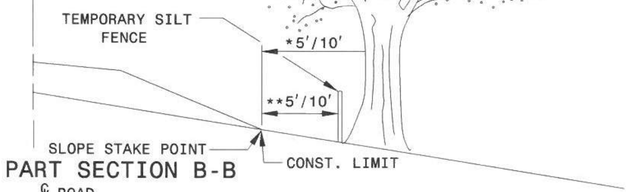

PART SECTION B-B

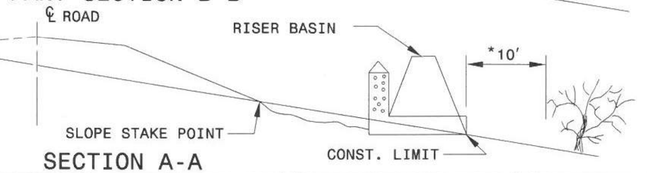

SECTION A-A

STATE OF
NORTH CAROLINA
DEPT. OF TRANSPORTATION
DIVISION OF HIGHWAYS
RALEIGH, N.C.

ENGLISH DETAIL DRAWING FOR
METHOD OF CLEARING
MODIFIED METHOD - III

SHEET 1 OF 1
200D03

CONTRACT STANDARDS AND DEVELOPMENT UNIT
Office 919-707-6950 FAX 919-250-4119

SEE TITLE BLOCK

ORIGINAL BY:	T.S.S.	DATE:	FEB.2000
MODIFIED BY:	K.A.K.	DATE:	AUG.2016
CHECKED BY:		DATE:	
FILE SPEC.:	kkempf/english/0200d301.dgn		

$$$$$$SYSTIME$$$$$$
$$$$$$USERNAME$$$$

DocuSign Envelope ID: 9197CD4C-F220-426A-94E8-74FEE51D3A8D

PROJECT REFERENCE NO.	SHEET NO.
U–5710A	2D–1

HYDRAULICS ENGINEER

NORTH CAROLINA PROFESSIONAL SEAL 042084 ENGINEER JOSHUA J MASSTOCK

Joshua Masstock

11/25/2019

DOCUMENT NOT CONSIDERED FINAL UNLESS ALL SIGNATURES COMPLETED

HDR Engineering, Inc. of the Carolinas
555 Fayetteville St, Suite 900 Raleigh, N.C. 27601
N.C.B.E.L.S. License Number: F-0116

STORMWATER POND DETAIL

NOT TO SCALE

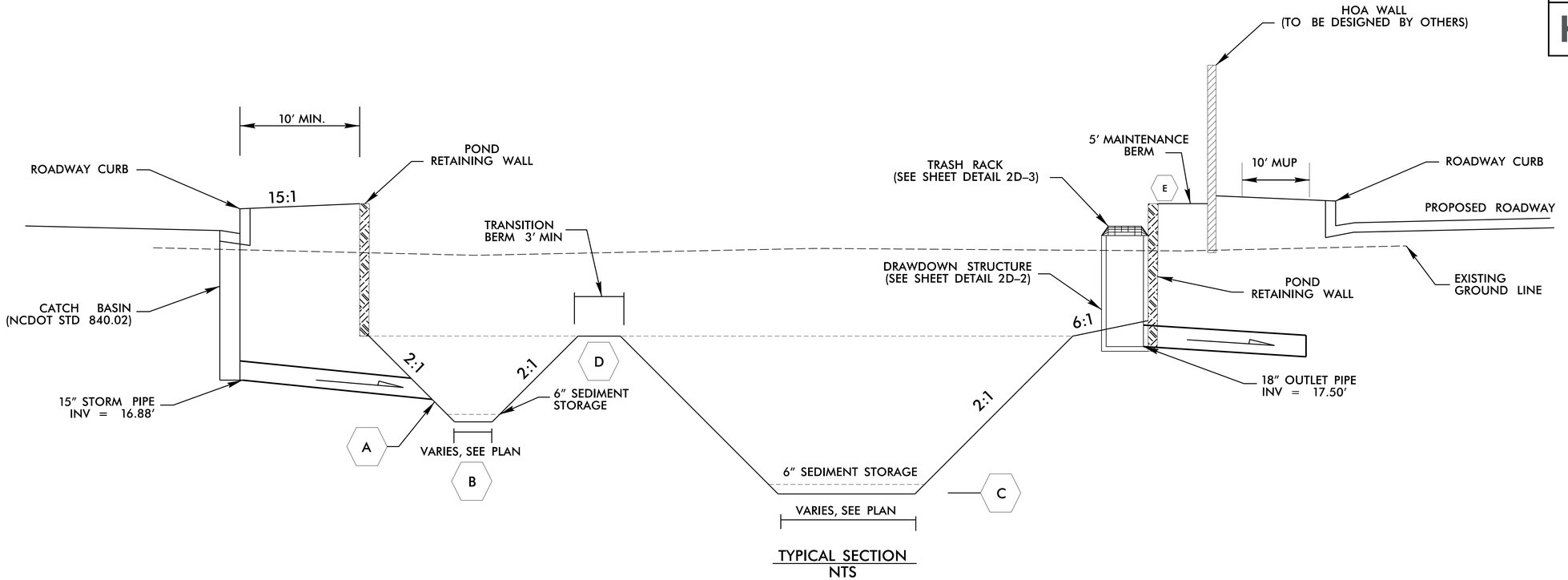

TYPICAL SECTION
NTS

TABLE 1

ELEVATIONS FOR STORMWATER POND					
STATION	A (INLET PIPE INVERT)	B (FOREBAY BOTTOM)	C (BOTTOM OF BASIN)	D (FOREBAY BERM)	E (TOP OF BERM)
-Y30LD- 16+82 RT	15.5'	14.5'	11.0'	18.5'	24.0'

NOTES:

1. SEE PLANS FOR LOCATION AND BASIN DIMENSIONS.
2. ALL DISTURBED BASIN SLOPES DRAINING INTO THE FILTRATION BASIN SHALL BE SODDED WITH BERMUDA SOD.
3. ACCESS BERM SHALL BE PROVIDED TO ACCESS CONTROL STRUCTURE ON BASIN AS SHOWN IN DETAIL.
4. FILL EMBANKMENT MATERIAL SHOULD CONSIST OF A–4, A–5, OR A–6 SOILS COMPACTED TO 95% OF AASHTO T–99 (STANDARD PROCTOR)

REVISIONS

PLOT DRIVER: NCDOT_pdf_color-eng_50.plt PENTABLE: NCDOT_pshpfl_conventional.tbl
USER: CHARRIS DATE: 11/25/2019 TIME: 3:32:58 PM
FILE: North_Carolina_Dept_of_Transportation\2014_16_Planning _Design_LSA\U_5710_TO_4_c\06.00_Project_Engineering_and_Design\U-5710A Hydraulics\CADD\U5710A_HYD_Pond Detail.dgn

DocuSign Envelope ID: 9197CD4C-F220-426A-94E8-74FEE51D3A8D

PROJECT REFERENCE NO.	SHEET NO.
U-5710A	2D-2

HYDRAULICS ENGINEER

NORTH CAROLINA PROFESSIONAL SEAL 042084 ENGINEER JOSHUA J MASSTOCK

11/25/2019

DOCUMENT NOT CONSIDERED FINAL UNLESS ALL SIGNATURES COMPLETED

HDR Engineering, Inc. of the Carolinas
555 Fayetteville St, Suite 900 Raleigh, N.C. 27601
N.C.B.E.L.S. License Number: F-0116

DRAWDOWN STRUCTURE DETAIL

NOT TO SCALE

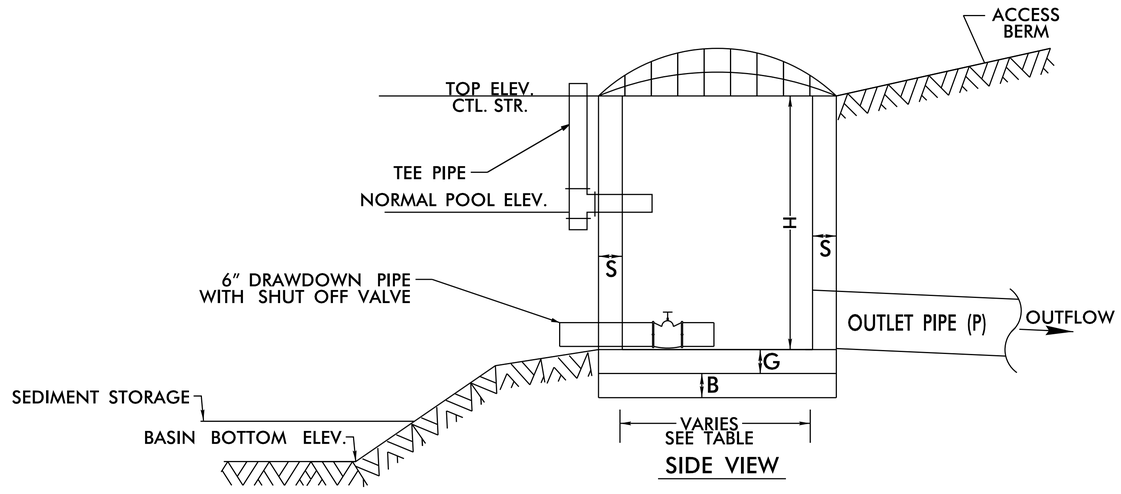

SIDE VIEW

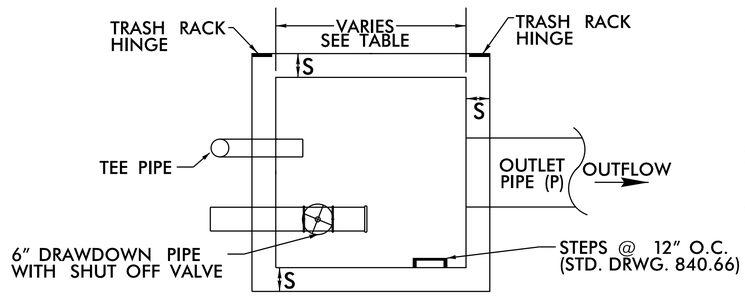

PLAN VIEW

TRASH RACK NOT SHOWN FOR CLARITY

NOTES

1) NO BEDDING MATERIAL TO BE USED. THERFORE, DO NOT FOLLOW STANDARD DRAWINGS FOR METHOD OF PIPE INSTALLATION FOR OUTLET PIPE THROUGH EMBANKMENT.
2) ENSURE TRASH RACK OPENS FREELY AND WITHOUT INTERFERENCE.
3) SHUT OFF VALVE MAY BE A GATE VALVE, BALL VALVE, SHEAR GATE, ETC. SHUT OFF VALVE IS TO REMAIN CLOSED DURING NORMAL OPERATON.

MINIMUM DIMENSIONS FOR WET DETENTION BASIN DRAWDOWN STRUCTURE

STATION	STRUCTURE NUMBER	SIDE WALLS (INCHES)	BASE B (INCHES)	BASE G (INCHES)	CTL. STR. DIMENSIONS			TOP ELEVATION CONTROL STRUCTURE	BASIN BOTTOM ELEV.	TEE PIPE DIAMETER INCHES	TEE PIPE INV. ELEV. (NORMAL POOL)	DRAWDOWN PIPE INVERT	OUTLET PIPE INVERT	OUTLET PIPE DIAMETER(P) INCHES	OUTLET PIPE MATERIAL
					W	L	H								
22+70 -L-	0617	10	10	12	3.5'	3.5'	4.25'	21.75'	11.00'	1.5	18.50'	17.50'	17.50'	18	CONCRETE

PLOT DRIVER: NCDOT_pdf_color-eng_50.plt PENTABLE: NCDOT_pshpfl_conventional.tbl
USER: CHARRIS DATE: 11/25/2019 TIME: 3:32:58 PM
FILE: North_Carolina_Dept_of_Transportation\2014_16_Planning _Design_LSA\U_5710_TO_4_c\06.00_Project_Engineering_and_Design\U-5710A Hydraulics\CADD\U5710A_HYD_Pond Detail.dgn

REVISIONS

6/2/99

DocuSign Envelope ID: 9197CD4C-F220-426A-94E8-74FEE51D3A8D

TRASH RACK DETAIL

NOT TO SCALE

RISER TRASH RACK NOTES:
1) ALL JOINTS SHALL BE FULLY WELDED AROUND JOINT WITH A MINIMUM OF A *" BEAD.
2) IF BOLTS ARE ANCHORED IN CONCRETE, FOLLOW STD. DWG. 862.03 AND 862.04 FOR ANCHORING PROCEDURE.
3) EYEBOLT FOR CHAIN CLOSURE SHALL BE INSTALLED BY THE SAME METHOD AS THE HINGE PLATE BOLTS.
4) RACK AND HARDWARE SHALL BE ALUMINUM OR REBAR AND GALVANIZED IN ACCORDANCE WITH ASTM A-153.
5) PROVIDE OPENING IN TRASH RACK TO ACCOMODATE SLUICE GATE, IF APPLICABLE, ON THE OUTLET PIPE. ENSURE TRASH RACK OPENS FREELY AND WITHOUT INTERFERENCE WITH SLUICE GATES.

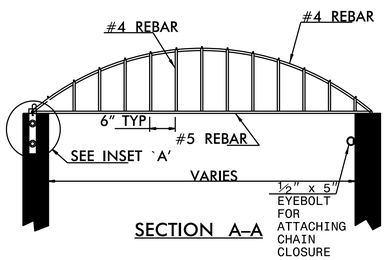

SECTION A–A

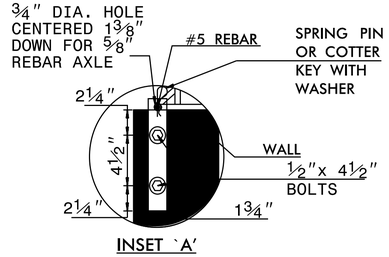

INSET `A'

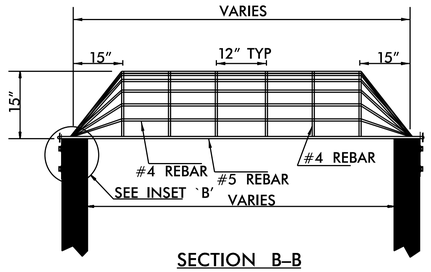

SECTION B–B

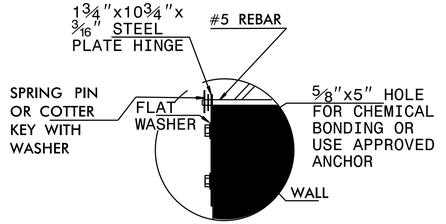

INSET 'B'

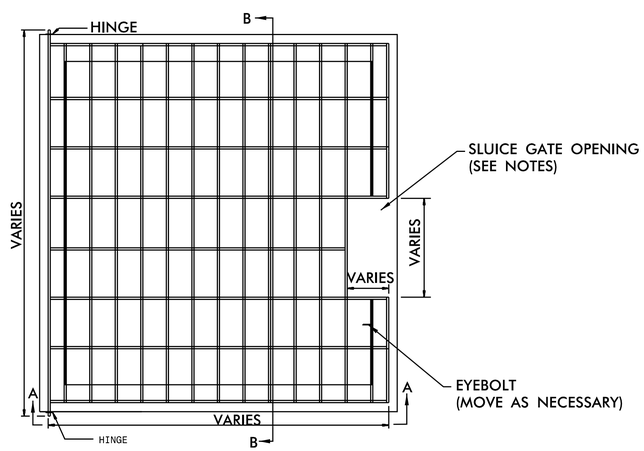

PLAN

PROJECT REFERENCE NO.	SHEET NO.
U-5710A	2D-3

HYDRAULICS ENGINEER
NORTH CAROLINA PROFESSIONAL SEAL 042084 ENGINEER JOSHUA J MASSTOCK
11/25/2019

DOCUMENT NOT CONSIDERED FINAL UNLESS ALL SIGNATURES COMPLETED

HDR Engineering, Inc. of the Carolinas
555 Fayetteville St, Suite 900 Raleigh, N.C. 27601
N.C.B.E.L.S. License Number: F-0116

REVISIONS

6/2/99

PLOT DRIVER: NCDOT_pdf_color_eng.50.plt
USER: CHARRIS
FILE: North_Carolina_Dept_of_Transportation\2014.16_Planning _Design_LSA\U-5710_TO.4_c\06.00_Project_Engineering_and_Design\U-5710A Hydraulics\CADD\U5710A_HYD_Pond Detail.dgn
DATE: 11/25/2019
TIME: 3:32:59 PM
PENTABLE: NCDOT_pshpfl_conventional.tbl

DocuSign Envelope ID: 9197CD4C-F220-426A-94E8-74FEE51D3A8D

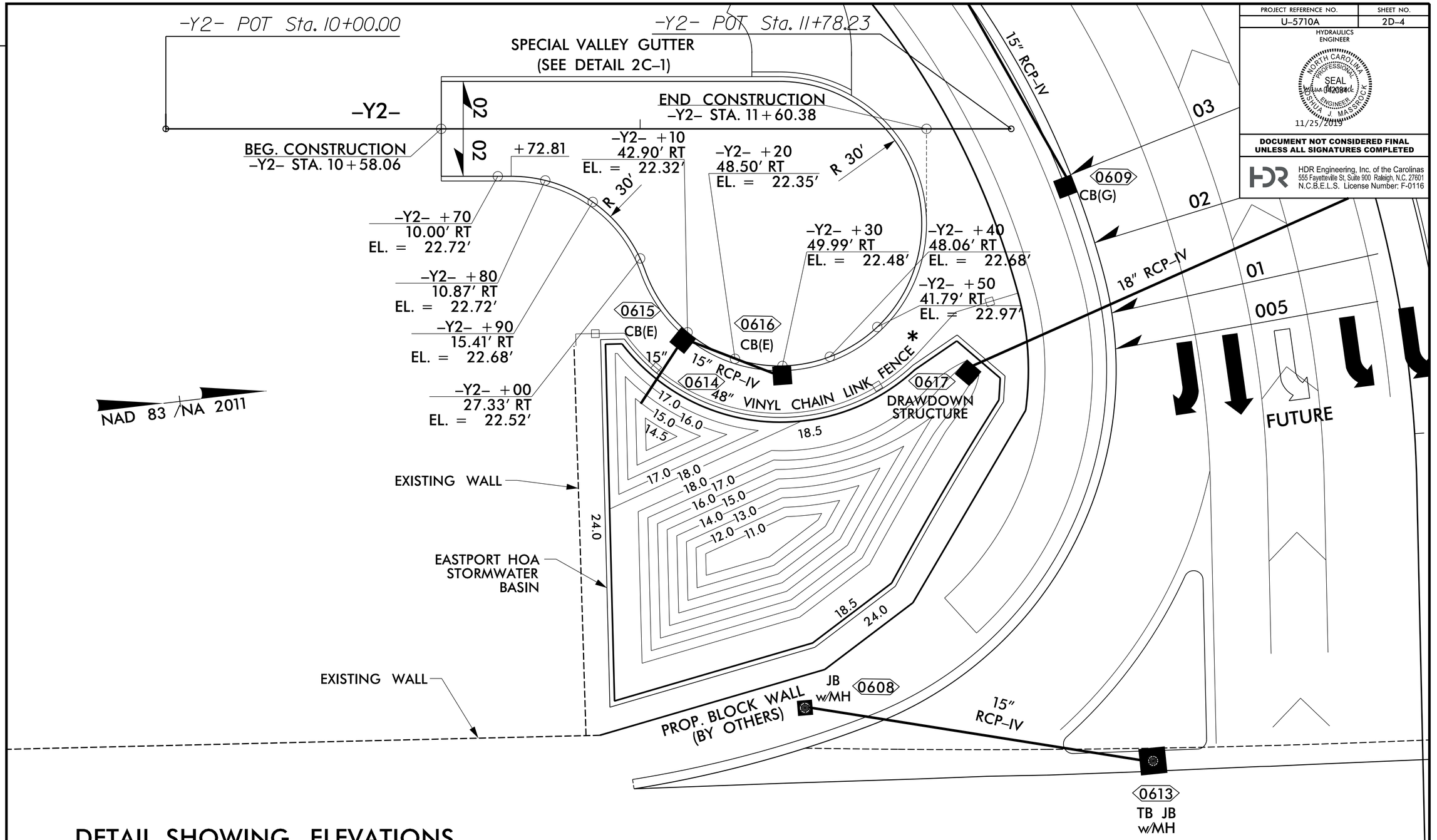

PROJECT REFERENCE NO.	SHEET NO.
U-5710A	2D-4

HYDRAULICS ENGINEER

NORTH CAROLINA PROFESSIONAL SEAL 042084 ENGINEER JOSHUA J. MASSOCK

11/25/2019

DOCUMENT NOT CONSIDERED FINAL UNLESS ALL SIGNATURES COMPLETED

HDR Engineering, Inc. of the Carolinas
555 Fayetteville St, Suite 900 Raleigh, N.C. 27601
N.C.B.E.L.S. License Number: F-0116

DETAIL SHOWING ELEVATIONS ON CUL-DE-SAC

SCALE 1" = 10'

SEE SHEET 7 FOR PLAN VIEW
SEE SHEET 10 FOR Y2 PROFILE

*NOTE: FENCE NOT TO BE PLACED UNTIL DIRECTED BY THE ENGINEER. REFER TO CONTRACT DOCUMENTS FOR ADDITIONAL INFORMATION.

REVISIONS

PLOT DRIVER: NCDOT.pdf.color_eng.50.plt PENTABLE: NCDOT_pshpfl_conventional.tbl
USER: CHARRIS DATE: 11/25/2019 TIME: 3:33:13 PM
FILE: North_Carolina.Dept_of_Transportation\2014.16_Planning _Design_LSA\U-5710_TO_4.cv\06.00_Project_Engineering_and_Design\U-5710A\Roadway\Proj\U5710A_RDY_PSH02D04.dgn

COMPUTED BY: _CEH_____ DATE: _8/28/19___
CHECKED BY: _____ DATE: _____

PROJECT NO.	SHEET NO.
U-5710A	3B-1

STATE OF NORTH CAROLINA
DIVISION OF HIGHWAYS

SUMMARY OF EARTHWORK

Station	Station	Uncl. Excav.	Undercut	Embank. +%	Borrow	Waste
L Sta. 10+44.11	L Sta. 23+68.78	3,323	632	8,701	5,378	632
Y2 Sta. 10+58.06	Y2 Sta. 11+60.88	135	0	16	0	119
Y3 Sta. 10+40.51	Y3 Sta. 11+94.81	310	0	8	0	301
Y4 Sta. 29+50.83	Y4 Sta. 31+50.00	105	0	0	0	105
SUBTOTALS:		3,873	632	8,725	5,378	1,157
TOTALS:		3,873	632	8,725	5,378	1,157
Additional Undercut :			400	500	500	400
Waste In Lieu of Borrow :					-525	-525
PROJECT TOTALS:		3,873	1,032	9,225	5,353	1,032
Est. 5% To Replace Top Soil on Borrow Pit					268	
GRAND TOTALS:		3,873	1,032	9,225	5,621	1,032
SAY:		**4,000**	**1,100**		**6,000**	

Note: Earthwork quantities are calculated by the Roadway Design Unit. These earthwork quantities are based in part on subsurface data provided by the Geotechnical Engineering Unit.

EST. DDE = 510 CY
EST. SHALLOW UNDERCUT = 100 CY
CLASS IV SUBGRADE STABILIZATION = 190 TONS

PAVEMENT REMOVAL SUMMARY

IN SQUARE YARDS

SURVEY LINE	Station	Station	LOCATION LT/RT/CL	ASPHALT REMOVAL	ASPHALT BREAKUP	CONCRETE REMOVAL	CONCRETE BREAKUP
-Y2-	11+53.06	11+78.23	CL	241.11			
		TOTAL:	241.11				
		SAY:	250				

RAL-CND7065ZJ0

COMPUTED BY: KMS DATE: 12/05/2019

CHECKED BY: JJM DATE: 12/05/2019

NORTH CAROLINA DEPARTMENT OF TRANSPORTATION
DIVISION OF HIGHWAYS

PROJECT NO.	SHEET NO.
U-5710A	3D-1

Note: Invert Elevations indicated are for Bid Purposes only and shall not be used for project construction stakeout. See "Standard Specifications For Roads and Structures, Section 300-5".

LIST OF PIPES, ENDWALLS, ETC. (FOR PIPES 48 INCHES & UNDER)

| LINE & STATION | OFFSET | STRUCTURE NUMBER FROM | STRUCTURE NUMBER TO | TOP ELEVATION FT. | INVERT ELEVATION FT. | INVERT ELEVATION FT. | MINIMUM REQUIRED SLOPE % | Drainage Pipe (RCP, CSP, CAAP, HDPE, or PVC) SIZE: 12 | 15 | 18 | 24 | 30 | 36 | 42 | 48 | Drainage Pipe THICKNESS OR GAUGE: DO NOT USE RCP | DO NOT USE CSP | DO NOT USE CAAP | DO NOT USE HDPE | DO NOT USE PVC | R. C. PIPE CLASS III SIZE: 12 | 15 | 18 | 24 | 30 | 36 | 42 | 48 | R. C. PIPE CLASS IV SIZE: 12 | 15 | 18 | 24 | 30 | 36 | 42 | 48 | ENDWALLS STD. 838.01 OR STD. 838.11 (UNLESS NOTED OTHERWISE) CY | REINFORCED ENDWALLS CY | DRAINAGE STRUCTURE MASONRY CY | QUANTITIES FOR DRAINAGE STRUCTURES NOTE: TOTAL LIN. FT. FOR PAY QUANTITY SHALL BE A + (1.3 X B) A: 0' THRU 5' EACH | B: 5' THRU 10' LIN. FT. | B: 10' AND ABOVE LIN. FT. | C.B. STD. 840.01 OR STD. 840.02 | FRAME, GRATES, AND HOOD STD. 840.03 GRATE TYPE E | F | G | CONCRETE TRANSITIONAL SECTION D.I. STD. 852.04 OR STD. 852.06 | C.B. STD. 852.05 | OPEN THROAT C.B. STD. 840.04 OR STD. 840.05 | CONCRETE BRIDGE APPROACH D.I. STD. 840.13 | D.I. STD. 840.14 OR STD. 840.15 | D.I. FRAME AND GRATES STD. 840.16 | G.D.I. TYPE "A" STD. 840.17 OR STD. 840.26 | G.D.I. TYPE "B" STD. 840.18 OR STD. 840.27 | G.D.I. TYPE "D" STD. 840.19 OR STD. 840.28 | G.D.I. (W.S. FLAT) FRAME WITH GRATE STD. 840.20 | G.D.I. (W.S. FLAT) FRAME W/ 2 GRATES STD. 840.20 | G.D.I. (W.S. SAG) FRAME W/ GRATE STD. 840.22 | G.D.I. (W.S. SAG) FRAME W/ 2 GRATES STD. 840.22 | G.D.I. (N.S. SAG) FRAME W/ GRATE STD. 840.24 | G.D.I. (N.S. SAG) FRAME W/ 2 GRATES STD. 840.24 | G.D.I. (N.S. FLAT) FRAME W/ GRATE STD. 840.29 | G.D.I. (N.S. FLAT) FRAME W/ 2 GRATES STD. 840.29 | DRIVEWAY D.I. STD. 840.30 | FRAME W/ GRATE FOR DRIVEWAY STD. 840.30 | J.B. STD. 840.31 OR STD. 840.32 | ANGLED VANE GRATES AND FRAMES STD. 840.33 | T.B.J.B. STD. 840.34 | T.B.D.I. STD. 840.35 | T.B.D.I. FOR STEEL GRATES STD. 840.36 | STEEL FRAME WITH TWO GRATES STD. 840.37 | TEMP STEEL PLATE COVER MASONRY DRAINAGE | M.H. STD. 840.51, STD. 840.52, OR STD. 840.53 | M.H. FRAME AND COVER STD. 840.54 | CONVERT EXISTING C.B. TO J.B. | CONVERT EXISTING C.B. TO D.I. | CONVERT EXISTING D.I. TO J.B. | ADJUST C.B. | ADJUST D.I. | FLOWABLE FILL CY | CONCRETE COLLARS CL. "B" STD. 840.72 CY | PIPE REMOVAL LIN. FT. | REMARKS |
|---|---|---

RAL-CND7065ZJ0

COMPUTED BY:	KMS	DATE:	12/05/2019
CHECKED BY:	JJM	DATE:	12/05/2019

NORTH CAROLINA DEPARTMENT OF TRANSPORTATION
DIVISION OF HIGHWAYS

PROJECT NO.	SHEET NO.
U-5710A	3D-2

Note: Invert Elevations indicated are for Bid Purposes only and shall not be used for project construction stakeout.
See "Standard Specifications For Roads and Structures, Section 300-5".

LIST OF PIPES, ENDWALLS, ETC. (FOR PIPES 48 INCHES & UNDER)

| LINE & STATION | OFFSET | STRUCTURE NUMBER FROM | STRUCTURE NUMBER TO | TOP ELEVATION FT. | INVERT ELEVATION FT. | INVERT ELEVATION FT. | MINIMUM REQUIRED SLOPE % | Drainage Pipe (RCP, CSP, CAAP, HDPE, or PVC) SIZE 12 | 15 | 18 | 24 | 30 | 36 | 42 | 48 | Drainage Pipe THICKNESS OR GAUGE: DO NOT USE RCP | DO NOT USE CSP | DO NOT USE CAAP | DO NOT USE HDPE | DO NOT USE PVC | R. C. PIPE CLASS III 12 | 15 | 18 | 24 | 30 | 36 | 42 | 48 | R. C. PIPE CLASS IV 12 | 15 | 18 | 24 | 30 | 36 | 42 | 48 | ENDWALLS STD. 838.01 OR STD. 838.11 (UNLESS NOTED OTHERWISE) CY | REINFORCED ENDWALLS CY | DRAINAGE STRUCTURE MASONRY CY | QUANTITIES FOR DRAINAGE STRUCTURES NOTE: TOTAL LIN. FT. FOR PAY QUANTITY SHALL BE A + (1.3 X B) A: 0' THRU 5' EACH | A: 5' THRU 10' LIN. FT. | B: 10' AND ABOVE LIN. FT. | C.B. STD. 840.01 OR STD. 840.02 | FRAME, GRATES, AND HOOD STD. 840.03 GRATE TYPE E | F | G | CONCRETE TRANSITIONAL SECTION D.I. STD. 852.04 OR STD. 852.06 | C.B. STD. 852.05 | OPEN THROAT C.B. STD. 840.04 OR STD. 840.05 | CONCRETE BRIDGE APPROACH D.I. STD. 840.13 | D.I. STD. 840.14 OR STD. 840.15 | D.I. FRAME AND GRATES STD. 840.16 | G.D.I. TYPE "A" STD. 840.17 OR STD. 840.26 | G.D.I. TYPE "B" STD. 840.18 OR STD. 840.27 | G.D.I. TYPE "D" STD. 840.19 OR STD. 840.28 | G.D.I. (W.S. FLAT) FRAME WITH GRATE STD. 840.20 | G.D.I. (W.S. FLAT) FRAME W/ 2 GRATES STD. 840.20 | G.D.I. (W.S. SAG) FRAME W/ GRATE STD. 840.22 | G.D.I. (W.S. SAG) FRAME W/ 2 GRATES STD. 840.22 | G.D.I. (N.S. SAG) FRAME W/ GRATE STD. 840.24 | G.D.I. (N.S. SAG) FRAME W/ 2 GRATES STD. 840.24 | G.D.I. (N.S. FLAT) FRAME W/ GRATE STD. 840.29 | G.D.I. (N.S. FLAT) FRAME W/ 2 GRATES STD. 840.29 | DRIVEWAY D.I. STD. 840.30 | FRAME W/ GRATE FOR DRIVEWAY STD. 840.30 | J.B. STD. 840.31 OR STD. 840.32 | ANGLED VANE GRATES AND FRAMES STD. 840.33 | T.B.J.B. STD. 840.34 | T.B.D.I. STD. 840.35 | T.B.D.I. FOR STEEL GRATES STD. 840.36 | STEEL FRAME WITH TWO GRATES STD. 840.37 | TEMP STEEL PLATE COVER MASONRY DRAINAGE | M.H. STD. 840.51, STD. 840.52, OR STD. 840.53 | M.H. FRAME AND COVER STD. 840.54 | CONVERT EXISTING C.B. TO J.B. | CONVERT EXISTING C.B. TO D.I. | CONVERT EXISTING D.I. TO J.B. | ADJUST C.B. | ADJUST D.I. | FLOWABLE FILL CY | CONCRETE COLLARS CL. "B" STD. 840.72 CY | PIPE REMOVAL LIN. FT. | REMARKS |
|---|---|---|---

RAL-CND7065ZJ0

COMPUTED BY:	KMS	DATE:	12/05/2019
CHECKED BY:	JJM	DATE:	12/05/2019

NORTH CAROLINA DEPARTMENT OF TRANSPORTATION
DIVISION OF HIGHWAYS

PROJECT NO.	SHEET NO.
U-5710A	3D-3

Note: Invert Elevations indicated are for Bid Purposes only and shall not be used for project construction stakeout.
See "Standard Specifications For Roads and Structures, Section 300-5".

LIST OF PIPES, ENDWALLS, ETC. (FOR PIPES 54 INCHES & OVER)

| LINE & STATION | OFFSET | STRUCTURE NUMBER FROM | STRUCTURE NUMBER TO | TOP ELEVATION FT. | INVERT ELEVATION FT. | INVERT ELEVATION FT. | MINIMUM REQUIRED SLOPE % | Drainage Pipe (RCP, CSP, CAAP, HDPE, or PVC) SIZE: 54 | 60 | 66 | 72 | 78 | 84 | DO NOT USE RCP | DO NOT USE CSP | DO NOT USE CAAP | DO NOT USE HDPE | DO NOT USE PVC | R. C. PIPE CLASS III 54 | 60 | 66 | 72 | 78 | 84 | R. C. PIPE CLASS IV 54 | 60 | 66 | 72 | 78 | 84 | ENDWALLS STD. 838.01 OR STD. 838.11 (UNLESS NOTED OTHERWISE) CY | REINFORCED ENDWALLS CY | DRAINAGE STRUCTURE MASONRY CY | QUANTITIES FOR DRAINAGE STRUCTURES NOTE: TOTAL LIN. FT. FOR PAY QUANTITY SHALL BE A + (1.3 X B) A: 0' THRU 5' EACH | B: 5' THRU 10' LIN. FT. | 10' AND ABOVE LIN. FT. | C.B. STD. 840.01 OR STD. 840.02 | FRAME, GRATES, AND HOOD STD. 840.03 GRATE TYPE E | F | G | CONCRETE TRANSITIONAL SECTION D.I. STD. 852.06 OR STD. 852.06 | C.B. STD. 852.05 | OPEN THROAT C.B. STD. 840.04 OR STD. 840.05 | CONCRETE BRIDGE APPROACH D.I. STD. 840.13 | D.I. STD. 840.14 OR STD. 840.15 | D.I. FRAME AND GRATES STD. 840.16 | G.D.I. TYPE "A" STD. 840.17 OR STD. 840.26 | G.D.I. TYPE "B" STD. 840.18 OR STD. 840.27 | G.D.I. TYPE "D" STD. 840.19 OR STD. 840.28 | G.D.I. (W.S. FLAT) FRAME WITH GRATE STD. 840.20 | G.D.I. (W.S. FLAT) FRAME W/ 2 GRATES STD. 840.20 | G.D.I. (W.S. SAG) FRAME W/ GRATE STD. 840.22 | G.D.I. (W.S. SAG) FRAME W/ 2 GRATES STD. 840.22 | G.D.I. (N.S. SAG) FRAME W/ GRATE STD. 840.24 | G.D.I. (N.S. SAG) FRAME W/ 2 GRATES STD. 840.24 | G.D.I. (N.S. FLAT) FRAME W/ GRATE STD. 840.29 | G.D.I. (N.S. FLAT) FRAME W/ 2 GRATES STD. 840.29 | DRIVEWAY D.I. STD. 840.30 | FRAME W/ GRATE FOR DRIVEWAY STD. 840.30 | J.B. STD. 840.31 OR STD. 840.32 | ANGLED VANE GRATES AND FRAMES STD. 840.33 | T.B.J.B. STD. 840.34 | T.B.D.I. STD. 840.35 | T.B.D.I. FOR STEEL GRATES STD. 840.36 | STEEL FRAME WITH TWO GRATES STD. 840.37 | TEMP STEEL PLATE COVER MASONRY DRAINAGE | M.H. STD. 840.51, STD. 840.52, OR STD. 840.53 | M.H. FRAME AND COVER STD. 840.54 | CONVERT EXISTING C.B. TO J.B. | CONVERT EXISTING C.B. TO D.I. | CONVERT EXISTING D.I. TO J.B. | CONVERT EXISTING J.B. TO D.I. | ADJUST C.B. | ADJUST D.I. | FLOWABLE FILL CY | CONCRETE COLLARS CL. "B" STD. 840.72 CY | PIPE REMOVAL LIN. FT. | REMARKS |
|---|---|---|---

COMPUTED BY: Steven V. Hudson, LG	DATE: 10/30/2018
CHECKED BY: J. Lee Stone, LG	DATE: 10/30/2018

(5-15-18)

PROJECT NO.	SHEET NO.
U-5710A	3G-1

STATE OF NORTH CAROLINA
DIVISION OF HIGHWAYS

SUMMARY OF SUBSURFACE DRAINAGE

LINE	Station	Station	Location LT/RT/CL	Drain Type* UD/BD/SD	LF
-L-	10+44	23+68	LT/RT	SD	2700
-Y3-	10+00	11+94	LT/RT	SD	400
CONTINGENCY				SD	200
				TOTAL LF:	3300

***UD = Underdrain**
***BD = Blind Drain**
***SD = Subsurface Drain**

SUMMARY OF AGGREGATE SUBGRADE/STABILIZATION

LINE	Station	Station	Aggregate Type* ASU(1/2)/ AST	Aggregate Thickness INCHES	Shallow Undercut CY	Class IV Subgrade Stabilization TONS	Geotextile for Soil Stabilization SY	Stabilizer Aggregate TONS	Class IV Aggregate Stabilization TONS
-L-	Varies						600		
CONTINGENCY			ASU (1)	12"	100	190	700		
				TOTAL CY/TONS/SY:		100	190**	1300**		

***ASU(1/2) = Aggregate Subgrade (Type 1 or 2)**
***AST = Aggregate Stabilization**
****Total tons of "Class IV Subgrade Stabilization" and total square yards of "Geotextile for Soil Stabilization" are only the estimated quantities for ASU(1/2)/AST and may only represent a portion of the subgrade stabilization and geotextile quantities shown in the Item Sheets of the Proposal.**

PROJ. REFERENCE NO.	SHEET NO.
U-5710A	3P-1

STATE OF NORTH CAROLINA
DIVISION OF HIGHWAYS

PARCEL INDEX SHEET

PARCEL No.	SHEET No.	PROPERTY OWNER NAME
1	4,5,6	THOMAS G. WETHERILL, WETHERILL FAMILY LAND LLC
4	5	STEPHANIE ROGERS & S. ARGUTO WILLIAM
6	5	ELOISE N. ELLER
7	5	EUGENE R. STRADER, JR
8	5	DIANE M. WALSTON, ETAL
10	6	BROOKE P. RUSSELL, REVOCABLE TRUST
11	6	MICHAEL S. ADAMS & ANGELA J.
12	6	D. SCOTT MCCONNELL & MARILYN
13	6	THOMAS HERGA
14	6	ETHEL L. REYNOLDS
15	4,5,6	EASTPORT HOA INC
16	4	SUSAN M. LENNON
21	6	EVENTIDE PROPERTIES LLC
22	6	NEW HANOVER COUNTY

PARCEL No.	SHEET No.	PROPERTY OWNER NAME

DocuSign Envelope ID: 9197CD4C-F220-426A-94E8-74FEE51D3A8D

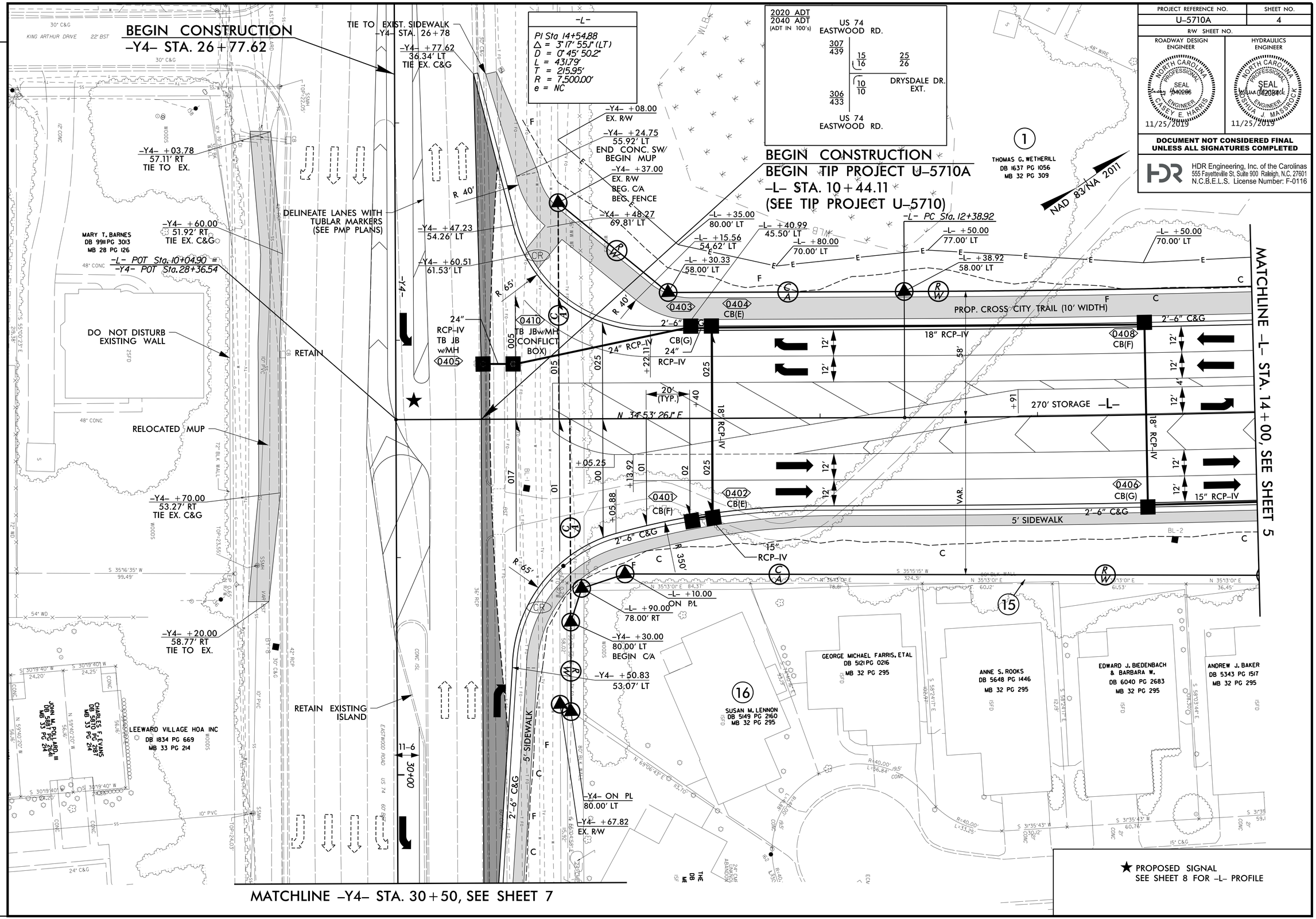

PROJECT REFERENCE NO.	SHEET NO.
U-5710A	4
R/W SHEET NO.	

ROADWAY DESIGN ENGINEER — NORTH CAROLINA PROFESSIONAL SEAL 040286 ENGINEER CASEY E. HARRIS — 11/25/2019

HYDRAULICS ENGINEER — NORTH CAROLINA PROFESSIONAL SEAL 042084 ENGINEER JOSHUA J. MASSROCK — 11/25/2019

DOCUMENT NOT CONSIDERED FINAL UNLESS ALL SIGNATURES COMPLETED

HDR Engineering, Inc. of the Carolinas
555 Fayetteville St, Suite 900 Raleigh, N.C. 27601
N.C.B.E.L.S. License Number: F-0116

REVISIONS

PLOT DRIVER: NCDOT_pdf_color_eng_50.plt PENTABLE: NCDOT_pshpfl_conventional.tbl
USER: CHARRIS DATE: 11/25/2019 TIME: 3:33:27 PM
FILE: North_Carolina_Dept_of_Transportation\2014_16_Planning_Design_LSA\U_5710_T0_4_c\06.00_Project_Engineering_and_Design\U-5710A\Roadway\Proj\U5710A_RDY_PSH04.dgn

DocuSign Envelope ID: 9197CD4C-F220-426A-94E8-74FEE51D3A8D

DOCUMENT NOT CONSIDERED FINAL UNLESS ALL SIGNATURES COMPLETED

PROJECT REFERENCE NO.	SHEET NO.
U-5710A	5
R/W SHEET NO.	

HDR Engineering, Inc. of the Carolinas
555 Fayetteville St, Suite 900 Raleigh, N.C. 27601
N.C.B.E.L.S. License Number: F-0116

ROADWAY DESIGN ENGINEER — NORTH CAROLINA PROFESSIONAL SEAL 040286 ENGINEER CASEY E. HARRIS — 11/25/2019

HYDRAULICS ENGINEER — NORTH CAROLINA PROFESSIONAL SEAL 042084 ENGINEER JOSHUA J. MASSROCK — 11/25/2019

REVISIONS

PLOT DRIVER: NCDOT_pdf_color-eng_50.plt PENTABLE: NCDOT_pshpfl_conventional.tbl
USER: CHARRIS DATE: 11/25/2019 TIME: 3:33:41 PM
FILE: North_Carolina_Dept_of_Transportation\2014_16_Planning_-Design_LSA\U_5710_T0_4_c\06.00_Project_Engineering_and_Design\U-5710A\Roadway\Proj\U5710A_RDY_PSH05.dgn

-Y6- POT Sta. 10+00.00

BEGIN CONSTRUCTION
-Y6- STA. 10+94.23

-L- POC Sta. 15+12.47 =
-Y3- POT Sta. 10+00.00

-L- PT Sta. 16+70.71

-L- POC Sta. 15+11.15 =
-Y6- POT Sta. 12+00.00

2020 ADT
2040 ADT
(ADT IN 100's)

-Y6-

DRYSDALE DR. EXT. — 25/26 — XX/28 — XX/113 — XX/85 — 71/72 — DRYSDALE DR. EXT.

X/3 — X/3 — X/5

CLIPPER LN. CONN.

DETAIL A
4' BASE TAIL DITCH
(Not to Scale)

Natural Ground — 3:1 — D — 3:1 — Natural Ground
B

Min. D = 3 Ft.
B = 4 Ft.
Length = 42 FT
Slope = 0.24%

FROM STA. 19+42 TO STA. 20+00 -L- LT
EST. DDE = 110 CY

(1) WETHERILL FAMILY LAND LLC
DB 5803 PG 2929
MB 32 PG 309
MB 61PG 224

(4) STEPHANIE ROGERS & S. ARGUTO WILLIAM
DB 5176 PG 1054
MB 32 PG 295

(15) EASTPORT HOA INC
DB 2288 PG 544
MB 32 PG 295

NAD 83/NA 2011

THOMAS G. WETHERILL
DB 1637 PG 1056
MB 32 PG 309

-L- +57.00
125.00' LT

-L- +60.00
114.00' LT &
96.00' LT

-L- +25.00
72.00' LT

-L- +25.00
58.00' LT
END C/A
END FENCE

END C&G
-Y6- +95.22
36.00' RT

END C&G
-Y6- +93.38
31.00' RT

-L- +65.00
125.00' LT

-L- +72.00
113.00' LT &
95.00' LT &
90.00' LT

-L- +95.00
65.00' LT
BEG. C/A
BEG. FENCE

-L- +70.71
85.00' LT

-L- +70.71
65.00' LT

-L- +50.00
80.00' LT

-L- +40.00
145.00' LT

-L- +15.00
95.00' LT
82.00' LT
65.00' LT

2' BASE TAIL DITCH
SEE DETAIL 'A'

0508 CLASS 'B' RIP RAP
EST. 8 TONS
21 SY GEO-TEXTILE

0501 CB(G) 15" RCP-IV
0502 CB(F) 15" RCP-IV
0503 CB(F)
0504 CB(G)
0505 CB(F)
0506 CB(G)
0507 CB(G) 30" RCP-IV
0509 CB(F)
0510 CB(G)
0511 CB(G) 15" RCP-IV VAR.

FUTURE
FUTURE
S 55°17'34" E
5" MONO. ISLAND
5' SIDEWALK
2'-6" C&G
15" RCP-IV
24" RCP-IV
24" RCP-IV VAR.
100' TAPER
125' LANE TAPER
270' STORAGE
200' LANE TAPER
1'-6" C&G
40' (TYP.)
20' (TYP.)
N 31°35'31.0" E
DO NOT DISTURB EXISTING WALL
PROP. CROSS CITY TRAIL (10' WIDTH)
2'-6" C&G
15" RCP-IV
3.5:1
SPEC. VALLEY GUTTER
SPEC. VALLEY GUTTER
S 58°24'17" E
20' (TYP.)

MATCHLINE -L- STA. 14+00, SEE SHEET 4

MATCHLINE -L- STA. 19+60, SEE SHEET 6

-L- +84.26
ON P/L
END C/A

-L- +03.00
ON P/L

END 5' SIDEWALK
BEGIN PROP. CCT
BEGIN ASPHALT PATH
STA. 14+29.09

END 2'-6" C&G
+72.00 LT & RT

BEG. SP VALLEY GUT.
+82.00 LT & RT

DO NOT DISTURB EXISTING WALL

END CONSTRUCTION
-Y3- STA. 11+94.81

-Y3- +82.00
ON P/L

END C&G +87.80
40.34' RT

-Y3- +81.94
55.00' RT

-Y3- +03.00
55.00' RT

-L- +43.68
ON P/L
BEGIN C/A

-L- +00.00
ON P/L

BEGIN C&G
+94.89
45.09' LT

-Y3- +81.94
60.00' LT

-Y3- +03.00
60.00' LT

-Y3- +82.00
ON P/L

-Y3- POT Sta. 12+04.82

-L- +22.31
77.04' RT

-L- +61.77
79.50' RT

-L- +81.56
73.95' RT

-L- +81.59
76.27' RT

WETHERILL FAMILY LAND LLC
DB 5803 PG 2929
MB 32 PG 309
MB 61PG 224

MARY ANCIL FISHER
DB 1625 PG 1448
MB 32 PG 295

(6) ELOISE N. ELLER
DB 3039 PG 0456
MB 32 PG 295

(7) EUGENE R. STRADER, JR
DB 4959 PG 2569
MB 32 PG 295

(8) ELIZABETH FARONE-NEWBY & HUSBAND TERRANCE NEWBY
DB 6180 PG 994
MB 32 PG 295

JESSE G. BRINKLEY, JR & BETTY P.
DB 1721PG 0475
MB 32 PG 295

BETTY M. JACKSON, REV LIV TR
DB 4797 PG 0341
MB 32 PG 295

RONALD M. KRUEGER, LIVING TRUST
DB 5937 PG 1358
MB 32 PG 295

ANDREW J. BAKER
DB 5343 PG 1517
MB 32 PG 295

MELANIE B. ABBOTT
DB 5845 PG 1133
MB 32 PG 295

-L-
PI Sta 14+54.88
Δ = 3°17'55.1" (LT)
D = 0°45'50.2"
L = 431.79'
T = 215.95'
R = 7,500.00'
e = NC

★ PROPOSED SIGNAL
SEE SHEET 5A FOR DRAINAGE DITCH DETAIL
SEE SHEET 8 FOR -L- PROFILE
SEE SHEET 10 FOR -Y3- PROFILE

DocuSign Envelope ID: 9197CD4C-F220-426A-94E8-74FEE51D3A8D

PROJECT REFERENCE NO.	SHEET NO.
U-5710A	5A
R/W SHEET NO.	
ROADWAY DESIGN ENGINEER	HYDRAULICS ENGINEER
NORTH CAROLINA PROFESSIONAL SEAL 040286 ENGINEER CASEY E. HARRIS 11/25/2019	NORTH CAROLINA PROFESSIONAL SEAL 042084 ENGINEER JOSHUA J. MASSROCK 11/25/2019

DOCUMENT NOT CONSIDERED FINAL UNLESS ALL SIGNATURES COMPLETED

HDR Engineering, Inc. of the Carolinas
555 Fayetteville St, Suite 900 Raleigh, N.C. 27601
N.C.B.E.L.S. License Number: F-0116

DRAINAGE DITCH DETAIL

SCALE

10' 5' 0' 10' 20'

DETAIL A
2' BASE TAIL DITCH
(Not to Scale)

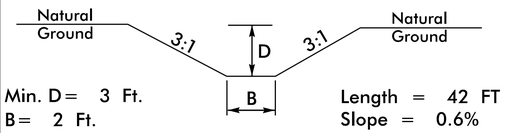

Min. D = 3 Ft.
B = 2 Ft.
Length = 42 FT
Slope = 0.6%

FROM STA. 19+42 TO STA. 20+00 -L- LT

DETAIL C
CHANNEL RELOCATION
(Not to Scale)

Min. D = 3 Ft.
B = 5 Ft.
Length = 60 FT
Slope = 0.3%
Type of Liner = CL I Rip-Rap

STA. 19+80 -L- LT
EST. 80 TONS
EST. 110 SY GEO-TEXTILE
DDE = 225 CY

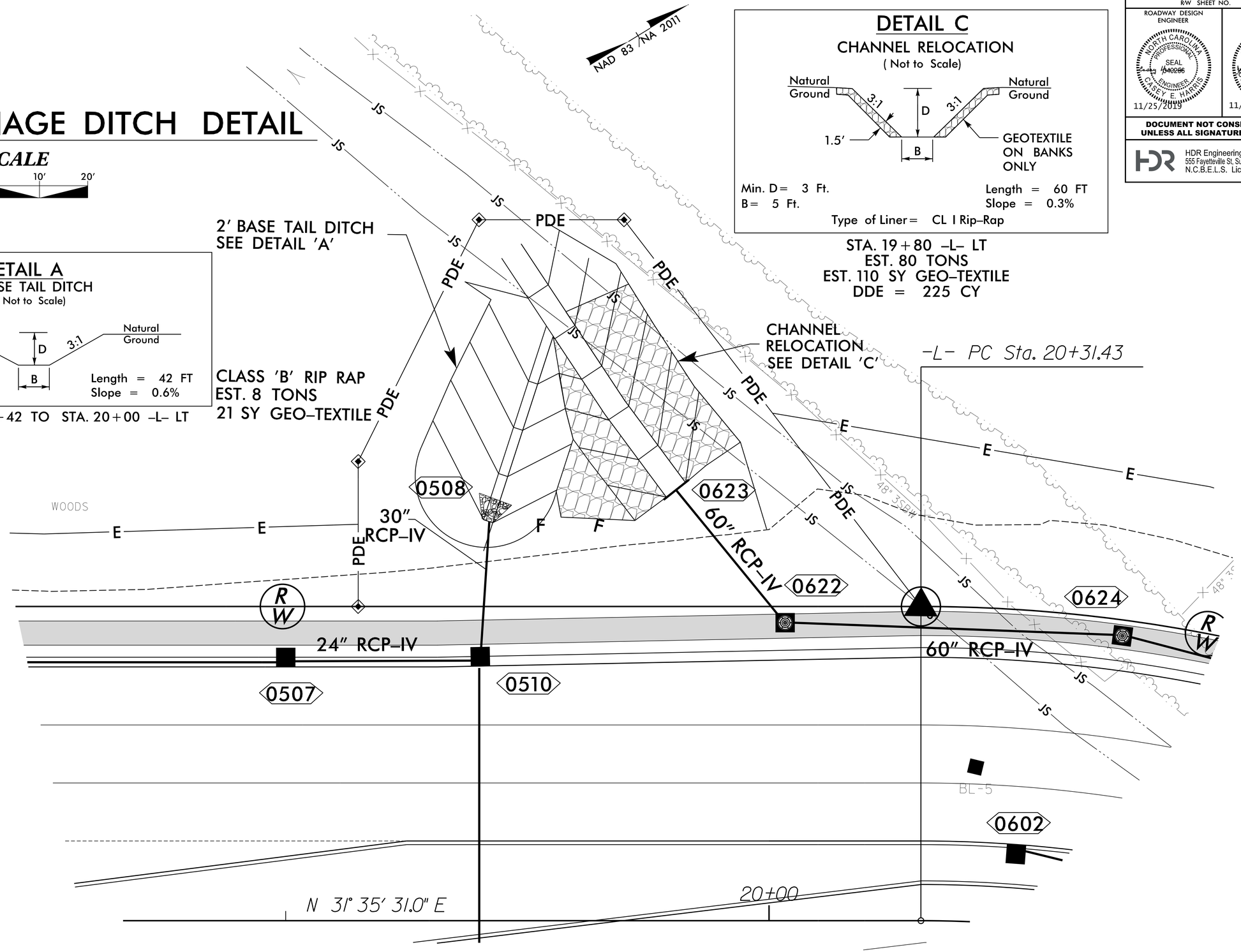

SEE SHEETS 5 & 6 FOR PLAN

REVISIONS

PLOT DRIVER: NCDOT_pdf_color_eng_50.plt PENTABLE: NCDOT_pshpfl_conventional.tbl
USER: CHARRIS DATE: 11/25/2019 TIME: 3:33:55 PM
FILE: North_Carolina_Dept_of_Transportation\2014_16_Planning _Design_LSA\U_5710_TO_4_c\06.00_Project_Engineering_and_Design\U-5710A\Roadway\Proj\U5710A_RDY_PSH05A.dgn

DocuSign Envelope ID: 9562A822-FCAD-4EDC-BACB-2EEFAD26AA73

PROJECT REFERENCE NO.	SHEET NO.
U-5710A	6
R/W SHEET NO.	

ROADWAY DESIGN ENGINEER — NORTH CAROLINA PROFESSIONAL SEAL 040286 ENGINEER CASEY E. HARRIS — 12/5/2019

HYDRAULICS ENGINEER — NORTH CAROLINA PROFESSIONAL SEAL 040084 ENGINEER JOSHUA J. MASTERCOLA — 12/5/2019

DOCUMENT NOT CONSIDERED FINAL UNLESS ALL SIGNATURES COMPLETED

HDR Engineering, Inc. of the Carolinas
555 Fayetteville St, Suite 900 Raleigh, N.C. 27601
N.C.B.E.L.S. License Number: F-0116

DETAIL B
CHANNEL IMPROVEMENTS
(Not to Scale)

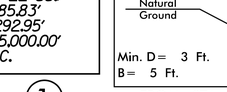

Min. D= 3 Ft.
B= 5 Ft.
Length = 80 FT
Slope = 0.3%

FROM STA. 22+81 TO STA. 23+24 –L– LT
EST. DDE = 170 CY

–L–
PI Sta 21+87.41
Δ = 63° 55' 22.8" (RT)
D = 22° 55' 05.9"
L = 278.92'
T = 155.98'
R = 250.00'
e = 0.03

–Y1–
PI Sta 49+35.35
Δ = 2° 14' 15.7" (LT)
D = 0° 22' 55.1"
L = 585.83'
T = 292.95'
R = 15,000.00'
e = N.C.

13 THOMAS HERGA DB 5654 PG 0358 MB 32 PG 295

14 ETHEL L. REYNOLDS DB 4902 PG 0969 MB 32 PG 295

15 EASTPORT HOA INC DB 2288 PG 544 MB 32 PG 295

1 WETHERILL FAMILY LAND LLC DB 5803 PG 2929 MB 32 PG 309 MB 61PG 224

10 BROOKE P. RUSSELL, REVOCABLE TRUST DB 5156 PG 2269 MB 32 PG 295

11 MICHAEL & ANGELA ADAMS DB 4195 PG 1 MB 32 PG 295

12 D. SCOTT MCCONNELL & MARILYN MCCONNELL DB 4555 PG 1 MB 32 PG 295

21 EVENTIDE PROPERTIES LLC DB 2675 PG 0768 MB 34 PG 298

22 NEW HANOVER COUNTY DB 5330 PG 1661 MB 39 PG 55

–L– STA. 19+60, SEE SHEET 5

CHANNEL RELOCATION SEE DETAIL 'C'

–L– PC Sta. 20+31.43

–L– +70.00 145.00' LT

–L– +75.00 95.00' LT

–L– +00.71 105.00' LT

–L– +45.00 95.00' LT

–L– +31.43 65.00' LT

–L– +00.00 90.00' LT

+21.13 20' (TYP)

–L– +35.00 65.00' LT

–L– +55.99 95.00' LT

–L– +70.00 120.00' LT

–L– +05.00 170.00' LT

CHANNEL IMPROVEMENTS SEE DETAIL 'B'

NAD 83/NA 2011

–L– +54.92 54.50' LT

–L– +60.00 65.00' LT

–L– +31.00 EX. R/W

–L– +34.00 EX. R/W

END SW –L– +55.13 END C/A, END FENCE 148.68' LT

–L– +22.57 79.97' LT

–L– PT Sta. 23+10.34

END C&G –Y1– +48.77 63.00' LT

–Y2– POT Sta. 11+78.23

–Y2– POT Sta. 10+00.00

–Y2– STA. 10+58.06

BEGIN CONSTRUCTION –Y1– STA. 45+32.72

END CONSTRUCTION –Y1– STA. 48+95.67

END CONSTRUCTION END TIP PROJECT U-5710A –L– STA. 23+68.78 (SEE TIP PROJECT U-5710)

–Y1– PC Sta. 46+42.39

–L– POT Sta. 24+24.16

60" RCP-IV · 5' SIDEWALK · 2'-6" C&G · 100' TAPER · 1'-6" C&G 20±00 · 15" RCP-IV · 18" RCP-IV · 24" RCP-IV · 365' STORAGE · 575' STORAGE · 210' STORAGE · FUTURE · PROP. CROSS CITY TRAIL (10' WIDTH) · VALLEY GUTTER (SEE DETAIL 2C-1) · DRAWDOWN STRUCTURE · EASTPORT HOA STORMWATER BASIN · BEG. BLOCK WALL –L– STA. +88 (BY OTHERS) · DO NOT DISTURB EXISTING WALL · END BLOCK WALL –Y1– STA. +26 (BY OTHERS) · REMOVE · REMOVE 5" MONO. ISLAND · REMOVE 70 LF OF 12" CMP · RETAIN · CHANNEL RELOCATION · CHORD · CHORD-PUE · JB w/MH · CB(E) · CB(F) · CB(G) · TB JB w/MH

2020 ADT
2040 ADT
(ADT IN 100's)

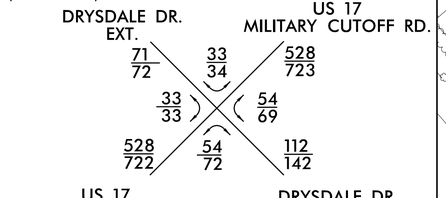

☆ MODIFIED SIGNAL
SEE SHEET 2B-1 FOR CUL-DE-SAC DETAIL
SEE SHEETS 2D-1 THRU 2D-4 FOR POND DETAIL
SEE SHEET 5A FOR DRAINAGE DITCH DETAIL
SEE SHEETS 8 & 9 FOR –L– PROFILE
SEE SHEET 10 FOR –Y2– PROFILE

REVISIONS

PLOT DRIVER: NCDOT_pdf_color_eng_50.plt PENTABLE: NCDOT_pshpfl_conventional.tbl
USER: CHARRIS DATE: 12/5/2019 TIME: 9:40:16 AM
FILE: North_Carolina_Dept_of_Transportation\2014_16_Planning_Design_LSAU_5710_TO_4_c\06_00_Project_Engineering_and_Design\

DocuSign Envelope ID: 9197CD4C-F220-426A-94E8-74FEE51D3A8D

PROJECT REFERENCE NO.	SHEET NO.
U-5710A	7
R/W SHEET NO.	

ROADWAY DESIGN ENGINEER

NORTH CAROLINA PROFESSIONAL SEAL 040286 ENGINEER CASEY E. HARRIS

11/25/2019

HYDRAULICS ENGINEER

NORTH CAROLINA PROFESSIONAL SEAL 042084 ENGINEER JOSHUA J. MASSEROCK

11/25/2019

DOCUMENT NOT CONSIDERED FINAL UNLESS ALL SIGNATURES COMPLETED

HDR Engineering, Inc. of the Carolinas
555 Fayetteville St, Suite 900 Raleigh, N.C. 27601
N.C.B.E.L.S. License Number: F-0116

MATCHLINE -Y4- STA. 30+50, SEE SHEET 4

REVISIONS

PLOT DRIVER: NCDOT_pdf_color_eng_50.plt PENTABLE: NCDOT_pshpfl_conventional.tbl
USER: CHARRIS DATE: 11/25/2019 TIME: 3:34:22 PM
FILE: North_Carolina_Dept_of_Transportation\2014_16_Planning _Design_LSAU_5710_TO_4_cV06_00_Project_Engineering_and_Design\U-5710A\Roadway\Proj\U5710A_RDY_PSH07.dgn

NAD 83/NA 2011

LMA A. HODGES
9912 PG 2205
3 33 PG 150

VIRGINIA CAROLE FOY
DB 1888 PG 0684
MB 34 PG 258

MICHAEL B DAVIS
DB 6004 PG 1142
MB 34 PG 258

TAMELA B. STRICKLAND
DB 5839 PG 0655
MB 32 PG 295

GORDON DELORES KEIFER, REV TR
DB 4165 PG 0964
MB 32 PG 295

SADIE SPENCE PRICE
DB 2411 PG 0033
MB 32 PG 295

NICHOLAS A. JOSEPH
DB 5892 PG 218
MB 32 PG 295

LEEWARD VILLAGE HOA INC
DB 1834 PG 669
MB 33 PG 214

EASTWOOD COMMONS OFFICE ASSN
DB 3382 PG 232
MB 28 PG 171

FUTURE PDE

RETAIN

0702

0701

5' SIDEWALK

2'-6" C&G

CB(F)

TB_JB w/MH

TIE TO EXIST. SIDEWALK
+48.77 45.58' RT

+50.00

FUTURE ROW

RETAIN

EXISTING MEDIAN OPENING DELINEATED WITH TUBULAR MARKERS (SEE PMP PLANS)

+44.03

11-6

REMOVE EXIST. CONC. ISLAND FROM -Y4- STA. 30+85 TO 32+90

RETAIN EXIST. ISLAND FROM -Y4- STA. 32+96 TO 36+70

-Y4-

35+00

END CONSTRUCTION
-Y4- STA. 32+90.43

PLASTIC BOLLARD

FUTURE ROW

80' BLK WALL

US 74 EASTWOOD RD VAR BST

US 74 CROSS CITY TRAIL VAR BST

CONC ISL

56' CONC

30' C&G

36" RCP

42" RCP

24" RCP

18" RCP

15" RCP

10" PVC

8" STEEL

24" C&G

30" C&G

30" BLK WALL

30" RCP PIPE DIRECTION

6" HDPE DIRECTION

20' DRAINAGE & UTILITY EASEMENT

78" CONC

POND

WOODS

BST

COMMONWEALTH DR VAR BST

GALLEON LN 16' BST

SSMH TOP=24.92'

SSMH TOP=24.76'

SSMH TOP=24.98'

SSMH TOP=25.57'

EIP 0.32' IN R/W

EIP 0.37' IN R/W

10' X 70' SIGHT EASEMENT

S 35°45'28" W 50.00'

N 54°14'32" W 36.25'

S 55°04'58" E 54.95'

N 55°04'58" W 52.26'

N 55°04'58" W 56.95'

N 55°04'58" W 60.14'

N 55°04'58" W 59.47'

S 55°05'46" E 59.47'

S 55°05'46" E 15.63'

S 55°11'15" E 77.33'

N 34°55'02" E 114.02'

N 34°55'02" E 3.14'

S 55°05'46" E 3.22'

N 34°55'02" E 60.14'

S 18°00'56" E 111.47'

N 05°46'58" W 108.59'

N 34°55'16" E 114.00'

S 34°55'02" E 114.02'

S 34°55'02" E 114.04'

S 34°55'02" E 114.00'

S 34°55'02" E 64.40'

N 34°55'02" E 64.40'

R=40.00' L=28.90'

R=40.00' L=27.64'

R=40.00' L=54.01'

R=40.00' L=28.90'

R=40.00' L=29.81'

24" CMP

21' CONC

20.5' CONC

15' C&G

99' RW

M 15°05'42" N

DocuSign Envelope ID: 9197CD4C-F220-426A-94E8-74FEE51D3A8D

HDR Engineering, Inc. of the Carolinas
555 Fayetteville St, Suite 900 Raleigh, N.C. 27601
N.C.B.E.L.S. License Number: F-0116

PROJECT REFERENCE NO.	SHEET NO.
U-5710A	8

ROADWAY DESIGN ENGINEER

NORTH CAROLINA PROFESSIONAL SEAL 040286 ENGINEER CASEY E. HARRIS
11/25/2019

HYDRAULICS ENGINEER

NORTH CAROLINA PROFESSIONAL SEAL 042084 ENGINEER JOSHUA J. MASSTOCK
11/25/2019

DOCUMENT NOT CONSIDERED FINAL UNLESS ALL SIGNATURES COMPLETED

BEGIN GRADE
BEGIN TIP PROJECT U-5710A
-L- STA. 10+44.11
EL. = 22.83'

FUTURE TIE TO U-5710
-L- STA. 10+48.90
EL. = 23.18'

PI = 10+77.50
EL = 23.00'

PI = 11+40.00
EL = 22.59'
VC = 125'
K = 98

PROPOSED GRADE

(+)0.5069%

(-)0.6434%

(-)0.6434%

(+)0.6295%

EXISTING GROUND

-L- STA. 15+12.47
-Y3- STA. 10+00.00

35 30 25 20 15 10 5 0

10+00 11+00 12+00 13+00 14+00 15+00

SEE SHEETS 4 & 5 FOR -L- PLAN

PI = 16+60.00
EL = 25.87'
VC = 204'
K = 194

PROPOSED GRADE

(+)0.6295%

(-)0.4202%

(-)0.4202%

EXISTING GROUND

UNDERCUT EXCAVATION

35 30 25 20 15 10 5 0

16+00 17+00 18+00 19+00 20+00 21+00

SEE SHEETS 5 & 6 FOR -L- PLAN

REVISIONS

PLOT DRIVER: NCDOT.pdf_color-eng.50.plt
USER: CHARRIS
FILE: North_Carolina_Dept_of_Transportation\2014_16_Planning_Design_LSA\U-5710_TO_4_c\06.00_Project_Engineering_and_Design\U-5710A_Roadway\Proj\U5710A_RDY_PFL-08.dgn
PENTABLE: NCDOT_pshpfl_conventional.tbl
DATE: 11/25/2019
TIME: 3:34:34 PM

DocuSign Envelope ID: 9197CD4C-F220-426A-94E8-74FEE51D3A8D

HDR Engineering, Inc. of the Carolinas
555 Fayetteville St, Suite 900 Raleigh, N.C. 27601
N.C.B.E.L.S. License Number: F-0116

PROJECT REFERENCE NO.	SHEET NO.
U-5710A	9

ROADWAY DESIGN ENGINEER

NORTH CAROLINA PROFESSIONAL SEAL 040286 ENGINEER CASEY E. HARRIS

11/25/2019

HYDRAULICS ENGINEER

NORTH CAROLINA PROFESSIONAL SEAL 042084 ENGINEER JOSHUA J. MASSEROCK

11/25/2019

DOCUMENT NOT CONSIDERED FINAL UNLESS ALL SIGNATURES COMPLETED

END GRADE
END TIP PROJECT U-5710A
-L- STA. 23+68.78
EL. = 24.70'

FUTURE TIE TO U-5710
-L- STA. 23+73.16
EL = 25.00'

BM #5
-L- STA. 23+25.75 (303.21' LT)
ELEV. = 24.48'
RR SPIKE IN 18" PINE

PI = 21+40.00
EL = 23.85'
VC = 130'
K = 142

PI = 23+30.00
EL = 24.79'

PROPOSED GRADE

(+)0.4932%

(+)0.4932%

(-)0.2170%

(-)0.4202%

EXISTING GROUND

UNDERCUT EXCAVATION

-L-

SEE SHEET 6 FOR -L- PLAN

35 30 25 20 15 10 5 0

22+00 23+00 24+00

REVISIONS

PLOT DRIVER: NCDOT_pdf_color_eng_50.plt PENTABLE: NCDOT_pshpfl_conventional.tbl
USER: CHARRIS DATE: 11/25/2019 TIME: 3:34:45 PM
FILE: North_Carolina_Dept_of_Transportation\2014_16_Planning _Design_LSA\U_5710_TO_4_c\06.00_Project_Engineering_and_Design\U-5710A\Roadway\Proj\U5710A_RDY_PFL-09.dgn

DocuSign Envelope ID: 9197CD4C-F220-426A-94E8-74FEE51D3A8D

HDR Engineering, Inc. of the Carolinas
555 Fayetteville St, Suite 900 Raleigh, N.C. 27601
N.C.B.E.L.S. License Number: F-0116

PROJECT REFERENCE NO.	SHEET NO.
U-5710A	10

ROADWAY DESIGN ENGINEER

NORTH CAROLINA PROFESSIONAL SEAL 040286 ENGINEER CASEY E. HARRIS
11/25/2019

HYDRAULICS ENGINEER

NORTH CAROLINA PROFESSIONAL SEAL 042084 ENGINEER JOSHUA J. MASSTOCK
11/25/2019

DOCUMENT NOT CONSIDERED FINAL UNLESS ALL SIGNATURES COMPLETED

BEGIN GRADE
-Y2- STA. 10+58.06
EL. = 22.94'

END GRADE
-Y2- STA. 11+59.38
EL. = 23.95'

PI = 10+90.00
EL = 22.84'
VC = 60'
K = 32

PROPOSED GRADE

(-)0.3000%

(+)1.5000%

EXISTING GROUND

-Y2-

SEE SHEET 6 FOR -Y2- PLAN

BEGIN GRADE
-Y3- STA. 10+40.51
EL. = 23.93'

END GRADE
-Y3- STA. 11+94.81
EL. = 23.66'

PI = 10+85.00
EL = 24.76'
VC = 85'
K = 30

PROPOSED GRADE

(+)1.8658%

(-)1.0000%

EXISTING GROUND

-Y3-

SEE SHEET 5 FOR -Y3- PLAN

REVISIONS

PLOT DRIVER: NCDOT_pdf_color_eng_50.plt PENTABLE: NCDOT_pshpfl_conventional.tbl
USER: CHARRIS DATE: 11/25/2019 TIME: 3:34:56 PM
FILE: North_Carolina_Dept_of_Transportation\2014_16_Planning_Design_LSA\U_5710_TO_4_c\06_00_Project_Engineering_and_Design\U-5710A\Roadway\Proj\U5710A_RDY_PLF-10.dgn

DocuSign Envelope ID: 8500058E-1FC4-4799-8BE6-796CDB3D8B39

STATE OF NORTH CAROLINA
DIVISION OF HIGHWAYS

TRANSPORTATION MANAGEMENT PLAN

NEW HANOVER COUNTY



LOCATION: NEW LOCATION NORTHWESTERN QUADRANT CONNECTION BETWEEN US 74 (EASTWOOD RD.) AND US 17 (MILITARY CUTOFF RD.)

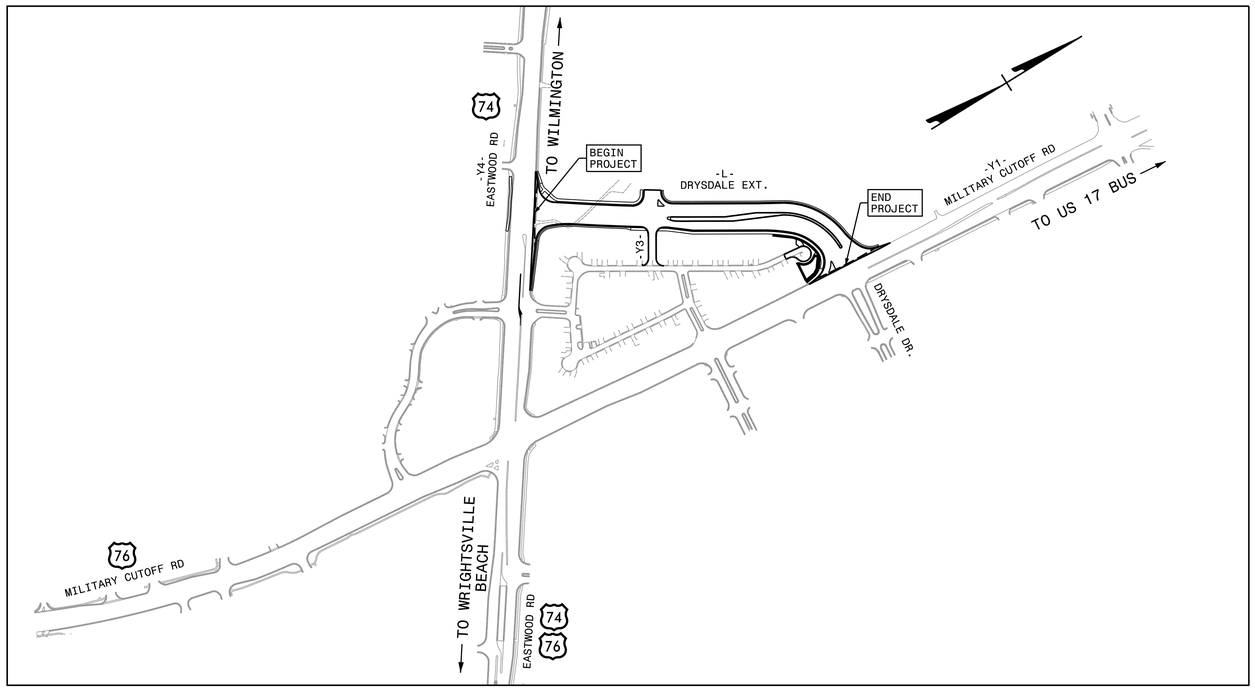



WORK ZONE SAFETY & MOBILITY
"from the MOUNTAINS to the COAST"

PLANS PREPARED BY:	*NCDOT CONTACTS:*
MICHELLE WARD, P.E.	STEVE KITE, P.E.
TRAFFIC CONTROL PROJECT ENGINEER	*PROJECT ENGINEER*
CHRIS HARNDEN	SPENCER JENNINGS
TRAFFIC CONTROL DESIGN ENGINEER	*PROJECT DESIGN ENGINEER*

DIVISION OF HIGHWAYS · STATE OF NORTH CAROLINA · DEPARTMENT OF TRANSPORTATION · WORK ZONE TRAFFIC CONTROL

INDEX OF SHEETS

SHEET NO.	TITLE
TMP-1	TITLE SHEET, VICINITY MAP, AND INDEX OF SHEETS
TMP-1A	LIST OF APPLICABLE ROADWAY STANDARD DRAWINGS, AND LEGEND
TMP-2 AND TMP-2A	TRANSPORTATION OPERATIONS PLAN: (MANAGEMENT STRATEGIES AND GENERAL NOTES)
TMP-3	TEMPORARY TRAFFIC CONTROL PHASING
TMP-4 AND TMP-5	TEMPORARY TRAFFIC CONTROL PHASE 1 DETAILS
TMP-6 AND TMP-7	TEMPORARY TRAFFIC CONTROL PHASE 2 DETAILS

PLAN PREPARED BY:

HDR Engineering, Inc. of the Carolinas
555 Fayetteville St, Suite 900 Raleigh, N.C. 27601
N.C.B.E.L.S. License Number: F-0116

DOCUMENT NOT CONSIDERED FINAL UNLESS ALL SIGNATURES COMPLETED

APPROVED: Michelle Ward

DATE: 11/26/2019

SEAL

NORTH CAROLINA PROFESSIONAL SEAL 033789 ENGINEER MICHELLE WARD

SHEET NO.
TMP-1

TIP PROJECT: U-5710A

CONTRACT: DC00277

PLOT DRIVER: NCDOT_pdf_color_eng_50.plt PENTABLE: NCDOT_tcp.tbl
USER: CHARNDEN DATE: 11/26/2019 TIME: 4:53:23 PM
FILE: p:\\PWAPPTPA01\SouthEast_Tampa\Documents\000166\CON0092456\0000000002415711\06.00_Project_Engineering_and_Design\U-5710A\Traffic\TrafficControl\TCP\U5710A_TC_TMP01.dgn

DocuSign Envelope ID: 8500058E-1FC4-4799-8BE6-796CDB3D8B39

ROADWAY STANDARD DRAWINGS

THE FOLLOWING ROADWAY STANDARDS AS SHOWN IN "ROADWAY STANDARD DRAWINGS" - N.C. DEPARTMENT OF TRANSPORTATION - RALEIGH, N.C., DATED JANUARY 2018 ARE APPLICABLE TO THIS PROJECT AND BY REFERENCE HEREBY ARE CONSIDERED A PART OF THESE PLANS:

STD. NO.	TITLE
1101.01	WORK ZONE ADVANCE WARNING SIGNS
1101.02	TEMPORARY LANE CLOSURES
1101.04	TEMPORARY SHOULDER CLOSURES
1101.05	WORK ZONE VEHICLE ACCESSES
1101.11	TRAFFIC CONTROL DESIGN TABLES
1110.01	STATIONARY WORK ZONE SIGNS
1110.02	PORTABLE WORK ZONE SIGNS
1115.01	FLASHING ARROW BOARDS
1130.01	DRUM
1135.01	CONES
1145.01	BARRICADES
1150.01	FLAGGING DEVICES
1165.01	TRUCK MOUNTED ATTENUATOR
1180.01	SKINNY-DRUM
1205.01	PAVEMENT MARKINGS - LINE TYPES AND OFFSETS
1205.02	PAVEMENT MARKINGS - TWO-LANE AND MULTI-LANE ROADWAYS
1205.04	PAVEMENT MARKINGS - INTERSECTIONS
1205.05	PAVEMENT MARKINGS - TURN LANES
1205.06	PAVEMENT MARKINGS - LANE DROPS
1205.07	PAVEMENT MARKINGS - PEDESTRIAN CROSSWALKS
1205.08	PAVEMENT MARKINGS - SYMBOLS AND WORD MESSAGES
1205.09	PAVEMENT MARKINGS - PAINTED ISLANDS
1250.01	RAISED PAVEMENT MARKERS - INSTALLATION SPACING
1251.01	RAISED PAVEMENT MARKERS - PERMANENT AND TEMPORARY
1264.01	OBJECT MARKERS - TYPES
1264.02	OBJECT MARKERS - INSTALLATION

PROJ. REFERENCE NO.	SHEET NO.
U-5710A	TMP-1A

HDR Engineering, Inc. of the Carolinas
555 Fayetteville St, Suite 900 Raleigh, N.C. 27601
N.C.B.E.L.S. License Number: F-0116

LEGEND

GENERAL

- DIRECTION OF TRAFFIC FLOW
- DIRECTION OF PEDESTRIAN TRAFFIC FLOW
- EXIST. PVMT.
- NORTH ARROW
- PROPOSED PVMT.
- TEMP. SHORING (LOCATION PURPOSES ONLY)
- WORK AREA
- CONTINUING CONSTRUCTION
- REMOVAL
- WEDGING
- TEMPORARY PAVEMENT

TRAFFIC CONTROL DEVICES

- BARRICADE (TYPE III)
- CONE
- DRUM SKINNY DRUM TUBULAR MARKER
- TEMPORARY CRASH CUSHION
- FLASHING ARROW PANEL (TYPE C)
- FLAGGER
- LAW ENFORCEMENT
- TRUCK MOUNTED IMPACT ATTENUATOR (TMIA)
- CHANGEABLE MESSAGE SIGN

TEMPORARY SIGNING

- PORTABLE SIGN
- STATIONARY SIGN
- STATIONARY OR PORTABLE SIGN

SIGNALS

EXISTING PROPOSED TEMPORARY (T E M P)

PAVEMENT MARKINGS

- EXISTING LINES
- TEMPORARY LINES

PAVEMENT MARKERS

- CRYSTAL/CRYSTAL
- CRYSTAL/RED
- YELLOW/YELLOW

PAVEMENT MARKING SYMBOLS

PAVEMENT MARKING SYMBOLS

APPROVED: Michelle Ward

DATE: 11/26/2019

NORTH CAROLINA PROFESSIONAL SEAL 033789 ENGINEER MICHELLE WARD

DOCUMENT NOT CONSIDERED FINAL UNLESS ALL SIGNATURES COMPLETED

DIVISION OF HIGHWAYS · STATE OF NORTH CAROLINA · DEPARTMENT OF TRANSPORTATION · WORK ZONE TRAFFIC CONTROL

ROADWAY STANDARD DRAWINGS & LEGEND

PLOT DRIVER: NCDOT_pdf_color_eng_50.plt
USER: CHARNDEN DATE: 11/26/2019
FILE: pw:\PWAPPTPA01:SouthEast_Tampa\Documents\000166\CON0092456\V0000000024157I\V06.00_Project_Engineering_and_Design\U-5710A\Traffic\TrafficControl\TCP\U5710A_TC_TMP01A.dgn
PENTABLE: NCDOT_tcp.tbl
TIME: 4:53:34 PM

DocuSign Envelope ID: DBEC07C5-FCB9-47E0-A70C-EF63A3F6D0A5

PROJ. REFERENCE NO.	SHEET NO.
U-5710A	TMP-2

HDR Engineering, Inc. of the Carolinas
555 Fayetteville St, Suite 900 Raleigh, N.C. 27601
N.C.B.E.L.S. License Number: F-0116

REVISIONS

MANAGEMENT STRATEGIES

DURING PHASE 1, TRAFFIC IS MAINTAINED IN THE EXISTING TRAFFIC PATTERNS. USING SHOULDER CLOSURES OR LANE CLOSURES, -L- IS COMPLETED FROM THE TIE-IN WITH -Y4- (US 74 EASTWOOD RD) TO THE TIE-IN WITH -Y1- (US 17/MILITARY CUTOFF RD).

A TEMPORARY TRAFFIC SIGNAL WITH BE REQUIRED AT THE INTERSECTION OF -Y1- (US 17/MILITARY CUTOFF RD) AND -L- (DRYSDALE DR. EXT.), TO MOVE POLES AWAY FROM WIDENING AND CONSTRUCTION ACCESS.

DURING PHASE 2, TRAFFIC WILL BE SHIFTED TO THE FINAL PATTERN ON -L- (DRYSDALE DR EXT.), -Y1- (US 17/MILITARY CUTOFF RD), -Y3- (DRYSDALE/CLIPPER CONNECTOR.), -Y4- (US 74/EASTWOOD RD), KING ARTHUR DR, AND EXISTING DRYSDALE DR.

USING LANE CLOSURES, CLOSE LEFT TURN ACCESS TO GALLEON LN, REMOVE EXISTING ISLAND ON -Y4-, THEN PLACE THE FINAL MARKINGS AND TUBULAR MARKERS.

PROPOSED SIGNALS WILL BE REQUIRED AT THE INTERSECTIONS OF:
-L- (DRYSDALE DR. EXT.)/-Y1- (US 17/MILITARY CUTOFF RD)
-L- (DRYSDALE DR. EXT.)/-Y4- (US 74/EASTWOOD RD)
-L- (DRYSDALE DR. EXT.)/-Y3- (DRYSDALE/CLIPPER CONNECTOR)
-Y1- (US 17/MILITARY CUTOFF RD) EMERGENCY SIGNAL AT FIRE STATION

GENERAL NOTES

CHANGES MAY BE REQUIRED WHEN PHYSICAL DIMENSIONS IN THE DETAIL DRAWINGS, STANDARD DETAILS, AND ROADWAY DETAILS ARE NOT ATTAINABLE TO MEET FIELD CONDITIONS, OR RESULT IN DUPLICATE, OR UNDESIRED OVERLAPPING OF DEVICES. MODIFICATIONS MAY INCLUDE: MOVING, SUPPLEMENTING, COVERING, OR REMOVAL OF DEVICES AS DIRECTED BY THE ENGINEER.

THE FOLLOWING GENERAL NOTES APPLY AT ALL TIMES FOR THE DURATION OF THE PROJECT, EXCEPT WHEN OTHERWISE NOTED IN THE PLAN, OR AS DIRECTED BY THE ENGINEER.

TIME RESTRICTIONS

A) DO NOT CONDUCT ANY WORK AS FOLLOWS:

ROAD NAME	DAY AND TIME RESTRICTIONS
-L- (DRYSDALE DR EXT.)	SUNDAY THROUGH SATURDAY 9:00 P.M. TO 6:00 A.M.

B) DO NOT CLOSE OR NARROW TRAVEL LANES AS FOLLOWS:

ROAD NAME	DAY AND TIME RESTRICTIONS
-Y1- (US 17/MILITARY CUTOFF RD)	SUNDAY THROUGH SATURDAY
-Y4- (US 74/EASTWOOD RD)	6:00 A.M. TO 9:00 P.M.

C) DO NOT CLOSE OR NARROW TRAVEL LANES DURING HOLIDAYS AND SPECIAL EVENTS AS FOLLOWS:

ROAD NAME

-Y1- (US 17/MILITARY CUTOFF RD)
-Y4- (US 74/EASTWOOD RD)

HOLIDAY

1. FOR ANY UNEXPECTED OCCURRENCE THAT CREATES UNUSUALLY HIGH TRAFFIC VOLUMES, AS DIRECTED BY THE ENGINEER.
2. FOR NEW YEAR'S, BETWEEN THE HOURS OF 6:00 A.M. DECEMBER 31st TO 9:00 P.M. JANUARY 2ND. IF NEW YEAR'S DAY IS ON A FRIDAY, SATURDAY, SUNDAY, OR MONDAY THEN UNTIL 9:00 P.M. THE FOLLOWING TUESDAY.
3. FOR EASTER, BETWEEN THE HOURS OF 6:00 A.M. THURSDAY AND 9:00 P.M. MONDAY.
4. FOR MEMORIAL DAY, BETWEEN THE HOURS OF 6:00 A.M. FRIDAY TO 9:00 P.M. TUESDAY.
5. FOR INDEPENDENCE DAY, BETWEEN THE HOURS OF 6:00 A.M. THE DAY BEFORE INDEPENDENCE DAY AND 9:00 P.M. THE DAY AFTER INDEPENDENCE DAY.

   IF INDEPENDENCE DAY IS ON A FRIDAY, SATURDAY, SUNDAY OR MONDAY THEN BETWEEN THE HOURS OF 6:00 A.M. THE THURSDAY BEFORE INDEPENDENCE DAY AND 9:00 P.M. THE TUESDAY AFTER INDEPENDENCE DAY.
6. FOR LABOR DAY, BETWEEN THE HOURS OF 6:00 A.M. FRIDAY AND 9:00 P.M. TUESDAY.
7. FOR THANKSGIVING DAY, BETWEEN THE HOURS OF 6:00 A.M. TUESDAY TO 9:00 P.M. MONDAY.
8. FOR CHRISTMAS, BETWEEN THE HOURS OF 6:00 A.M. THE FRIDAY BEFORE THE WEEK OF CHRISTMAS DAY AND 9:00 P.M. THE FOLLOWING TUESDAY AFTER THE WEEK OF CHRISTMAS.
9. FOR THE NORTH CAROLINA AZALEA FESTIVAL BETWEEN THE HOURS OF 6:00 A.M. THE DAY BEFORE THE EVENT AND 9:00 P.M. THE DAY AFTER THE EVENT.
10. FOR THE NHRMC WILMINGTON MARATHON MADNESS BETWEEN THREE (3) HOURS BEFORE THE START AND THREE (3) HOURS AFTER THE EVENT.
11. FOR THE IRONMAN 70.3 NORTH CAROLINA BETWEEN THREE (3) HOURS BEFORE THE START AND THREE (3) HOURS AFTER THE EVENT.
12. FOR THE RIVER TO SEA BETWEEN THREE (3) HOURS BEFORE THE START AND THREE (3) HOURS AFTER THE EVENT.
13. FOR THE RACE 13.1 BETWEEN THREE (3) HOURS BEFORE THE START AND THREE (3) HOURS AFTER THE EVENT.
14. FOR THE YMCA TRIATHLON BETWEEN THREE (3) HOURS BEFORE THE START AND THREE (3) HOURS AFTER THE EVENT.
15. FOR THE AZALEA TRIATHLON BETWEEN THREE (3) HOURS BEFORE THE START AND THREE (3) HOURS AFTER THE EVENT.

HAULING RESTRICTIONS

D) DO NOT CONDUCT MULTI-VEHICLE HAULING AS FOLLOWS; INGRESS AND EGRESS FROM ANY OPEN TRAVEL LANE WILL NOT BE ALLOWED:

ROAD NAME	DAY AND TIME RESTRICTIONS
-Y1- (US 17/MILITARY CUTOFF RD)	SUNDAY THROUGH SATURDAY
-Y4- (US 74/EASTWOOD RD)	6:00 A.M. TO 9:00 P.M.

E) DO NOT CONDUCT ANY HAULING OPERATIONS AGAINST THE FLOW OF TRAFFIC OF AN OPEN TRAVELWAY UNLESS THE HAULING OPERATION IS PROTECTED BY BARRIER OR GUARDRAIL OR AS DIRECTED BY THE ENGINEER.

F) DO NOT CONDUCT ANY HAULING ON PRIVATE STREETS IN THE EASTPORT SUBDIVISION.

LANE AND SHOULDER CLOSURE REQUIREMENTS

G) REMOVE LANE CLOSURE DEVICES FROM THE LANE WHEN WORK IS NOT BEING PERFORMED BEHIND THE LANE CLOSURE OR WHEN A LANE CLOSURE IS NO LONGER NEEDED OR AS DIRECTED BY THE ENGINEER.

H) WHEN PERSONNEL AND/OR EQUIPMENT ARE WORKING WITHIN 15 FT OF AN OPEN TRAVEL LANE, CLOSE THE NEAREST OPEN SHOULDER USING ROADWAY STANDARD DRAWING NO. 1101.04 UNLESS THE WORK AREA IS PROTECTED BY BARRIER OR GUARDRAIL OR A LANE CLOSURE IS INSTALLED.

I) WHEN PERSONNEL AND/OR EQUIPMENT ARE WORKING ON THE SHOULDER ADJACENT TO AN UNDIVIDED FACILITY AND WITHIN 5 FT OF AN OPEN TRAVEL LANE, CLOSE THE NEAREST OPEN TRAVEL LANE USING ROADWAY STANDARD DRAWING NO. 1101.02 UNLESS THE WORK AREA IS PROTECTED BY BARRIER OR GUARDRAIL.

   WHEN PERSONNEL AND/OR EQUIPMENT ARE WORKING ON THE SHOULDER ADJACENT TO A DIVIDED FACILITY AND WITHIN 10 FT OF AN OPEN TRAVEL LANE, CLOSE THE NEAREST OPEN TRAVEL LANE USING ROADWAY BARRIER OR GUARDRAIL.

J) WHEN PERSONNEL AND/OR EQUIPMENT ARE WORKING WITHIN A LANE OF TRAVEL OF AN UNDIVIDED OR DIVIDED FACILITY, CLOSE THE LANE ACCORDING TO THE TRAFFIC CONTROL PLANS, ROADWAY STANDARD DRAWINGS, OR AS DIRECTED BY THE ENGINEER. CONDUCT THE WORK SO THAT ALL PERSONNEL AND/OR EQUIPMENT REMAIN WITHIN THE CLOSED TRAVEL LANE.

APPROVED: Michelle Ward

DATE: 12/12/2019

SEAL

NORTH CAROLINA PROFESSIONAL SEAL 033789 ENGINEER MICHELLE WARD

DOCUMENT NOT CONSIDERED FINAL UNLESS ALL SIGNATURES COMPLETED

DIVISION OF HIGHWAYS STATE OF NORTH CAROLINA DEPARTMENT OF TRANSPORTATION WORK ZONE TRAFFIC CONTROL

TRANSPORTATION OPERATIONS PLAN (SHEET 1 OF 2)

PLOT DRIVER: NCDOT_pdf_color_eng_50.plt PENTABLE: NCDOT_tcp.tbl
USER: CHARNDEN DATE: 12/12/2019 TIME: 2:58:59 PM
FILE: pw:\\PWAPPTPA01:SouthEast_Tampa\Documents\0001166\CON0092456\0000000024157\1\06.00_Project_Engineering_and_Design\U-5710A\Traffic\TrafficControl\TCP\U5710A_TC_TMP02.dgn

DocuSign Envelope ID: DBEC07C5-FCB9-47E0-A70C-EF63A3F6D0A5

PROJ. REFERENCE NO.	SHEET NO.
U-5710A	TMP-2A

HDR Engineering, Inc. of the Carolinas
555 Fayetteville St, Suite 900 Raleigh, N.C. 27601
N.C.B.E.L.S. License Number: F-0116

GENERAL NOTES (CONT.)

PAVEMENT EDGE DROP OFF REQUIREMENTS

K) BACKFILL AT A 6:1 SLOPE UP TO THE EDGE AND ELEVATION OF EXISTING PAVEMENT IN AREAS ADJACENT TO AN OPENED TRAVEL LANE THAT HAS AN EDGE OF PAVEMENT DROP-OFF AS FOLLOWS:

BACKFILL DROP-OFFS THAT EXCEED 2 INCHES ON ROADWAYS WITH POSTED SPEED LIMITS OF 45 MPH OR GREATER.

BACKFILL DROP-OFFS THAT EXCEED 3 INCHES ON ROADWAYS WITH POSTED SPEED LIMITS LESS THAN 45 MPH.

BACKFILL WITH SUITABLE COMPACTED MATERIAL, AS APPROVED BY THE ENGINEER, AT NO EXPENSE TO THE DEPARTMENT.

L) DO NOT EXCEED A DIFFERENCE OF 2 INCHES IN ELEVATION BETWEEN OPEN LANES OF TRAFFIC FOR NOMINAL LIFTS OF 1.5 INCHES. INSTALL ADVANCE WARNING "UNEVEN LANES" SIGNS (W8-11) 500 FT IN ADVANCE AND A MINIMUM OF EVERY HALF MILE THROUGHOUT THE UNEVEN AREA.

TRAFFIC PATTERN ALTERATIONS

M) NOTIFY THE ENGINEER THIRTY (30) CALENDAR DAYS PRIOR TO ANY TRAFFIC PATTERN ALTERATION.

SIGNING

N) INSTALL ADVANCE WORK ZONE WARNING SIGNS WHEN WORK IS WITHIN 40 FT FROM THE EDGE OF TRAVEL LANE AND NO MORE THAN THREE (3) DAYS PRIOR TO THE BEGINNING OF CONSTRUCTION.

O) ENSURE ALL NECESSARY SIGNING IS IN PLACE PRIOR TO ALTERING ANY TRAFFIC PATTERN.

P) INSTALL BLACK ON ORANGE "DIP" SIGNS (W8-2) AND/OR "BUMP" SIGNS (W8-1) IN ADVANCE OF THE UNEVEN AREA, OR AS DIRECTED BY THE ENGINEER.

TRAFFIC CONTROL DEVICES

Q) WHEN LANE CLOSURES ARE NOT IN EFFECT SPACE CHANNELIZING DEVICES IN WORK AREAS NO GREATER IN FEET THAN TWICE THE POSTED SPEED LIMIT (MPH) EXCEPT, 10 FT ON-CENTER IN RADII, AND 3 FT OFF THE EDGE OF AN OPEN TRAVELWAY. REFER TO STANDARD SPECIFICATIONS FOR ROADS AND STRUCTURES SECTIONS 1130 (DRUMS), 1135 (CONES) AND 1180 (SKINNY DRUMS) FOR ADDITIONAL REQUIREMENTS.

R) PLACE TYPE III BARRICADES, WITH "ROAD CLOSED" SIGN R11-2 ATTACHED, OF SUFFICIENT LENGTH TO CLOSE ENTIRE ROADWAY.

S) PLACE ADDITIONAL SETS OF THREE CHANNELIZING DEVICES PERPENDICULAR TO THE EDGE OF TRAVELWAY ON 500 FT CENTERS WHEN UNOPENED LANES ARE CLOSED TO TRAFFIC.

PAVEMENT MARKINGS AND MARKERS

T) INSTALL TEMPORARY PAVEMENT MARKINGS AND TEMPORARY PAVEMENT MARKERS ON INTERIM LAYERS OF PAVEMENT AS FOLLOWS:

ROAD NAME	MARKING	MARKER
ALL ROADS	PAINT	TEMPORARY RAISED

U) PLACE ONE APPLICATION OF PAINT FOR TEMPORARY TRAFFIC PATTERNS. PLACE A SECOND APPLICATION OF PAINT SIX (6) MONTHS AFTER THE INITIAL APPLICATION AND EVERY SIX MONTHS AS DIRECTED BY THE ENGINEER.

V) TIE PROPOSED PAVEMENT MARKING LINES TO EXISTING PAVEMENT MARKING LINES.

W) REMOVE/REPLACE ANY CONFLICTING/DAMAGED PAVEMENT MARKINGS AND MARKERS BY THE END OF EACH DAY'S OPERATION.

X) TRACE THE PROPOSED MONOLITHIC ISLAND LOCATIONS WITH PROPER COLOR PAVEMENT MARKINGS PRIOR TO INSTALLATION. PLACE DRUMS TO DELINEATE ANY PROPOSED MONOLITHIC ISLANDS

MISCELLANEOUS

Y) LAW ENFORCEMENT SHALL BE USED TO MAINTAIN TRAFFIC THROUGH THE WORK AREA AND/OR INTERSECTIONS AS DIRECTED BY THE ENGINEER.

Z) ALL CURB RAMP LOCATIONS SHALL BE DERIVED FROM STATIONING SHOWN ON PAVEMENT MARKING PLANS OR AS DIRECTED BY THE ENGINEER IN COORDINATION WITH THE SIGNING AND DELINEATION UNIT.

AA) CONTRACTOR SHALL MAINTAIN SIDEWALK ACCESS AT ALL TIMES AS STATED IN THE PHASING. CONTRACTOR SHALL BE RESPONSIBLE TO PROVIDE TEMPORARY SIDEWALKS (CONCRETE, ASPHALT, OR OTHER SUITABLE MATERIAL AS APPROVED BY THE ENGINEER) AT ALL LOCATIONS WHERE THE OPEN PEDESTRIAN TRAVELWAY HAS BEEN REMOVED FOR CONSTRUCTION OPERATIONS (UTILITIES, DRAINAGE, ETC.).

APPROVED: Michelle Ward

DATE: 12/12/2019

SEAL

NORTH CAROLINA PROFESSIONAL SEAL 033789 ENGINEER MICHELLE WARD

DOCUMENT NOT CONSIDERED FINAL UNLESS ALL SIGNATURES COMPLETED

DIVISION OF HIGHWAYS · STATE OF NORTH CAROLINA · DEPARTMENT OF TRANSPORTATION · WORK ZONE TRAFFIC CONTROL

TRANSPORTATION OPERATIONS PLAN (SHEET 2 OF 2)

REVISIONS

PLOT DRIVER: NCDOT_pdf_color_eng_50.plt PENTABLE: NCDOT_tcp.tbl
USER: CHARNDEN DATE: 12/12/2019 TIME: 2:59:00 PM
FILE: pw:\\PWAPPTPA01:SouthEast_Tampa\Documents\0001166\CON0092456\0000000002415711\06.00_Project_Engineering_and_Design\U-5710A\Traffic\TrafficControl\TCP\U5710A_TC_TMP02.dgn

DocuSign Envelope ID: DBEC07C5-FCB9-47E0-A70C-EF63A3F6D0A5

PROJ. REFERENCE NO.	SHEET NO.
U-5710A	TMP-3

HDR Engineering, Inc. of the Carolinas
555 Fayetteville St, Suite 900 Raleigh, N.C. 27601
N.C.B.E.L.S. License Number: F-0116

NOTES:

BEFORE BEGINNING ANY CONSTRUCTION ACTIVITIES, THE CONTRACTOR SHALL INSTALL ALL ADVANCE WARNING SIGNS AND TRAFFIC CONTROL DEVICES ACCORDING TO RSD 1101.01, SHEETS 2 & 3 OF 3. FIELD VERIFY LOCATIONS WITH THE RESIDENT ENGINEER PRIOR TO INSTALLATION.

MAINTAIN ACCESS TO ALL RESIDENCES AND BUSINESSES DURING THE LIFE OF THE CONTRACT USING INCIDENTAL STONE AS NEED, UNLESS OTHERWISE NOTED IN THE PHASING OR AS DIRECTED BY THE ENGINEER.

COMPLETE ANY PROPOSED OR TEMPORARY WIDENING IN SUCH A MANNER THAT NO PONDING OF WATER WILL OCCUR WITHIN THE TRAVEL LANE.

WHEN PHASING STATES TO USE LANE CLOSURES, REFER TO THE FOLLOWING FOR ALL EXISTING AND PROPOSED ROADS:

- ALL TWO-LANE/TWO-WAY FACILITIES - SEE RSD 1101.02, SHEET 1 OF 14
- ALL 3-LANE OR 5-LANE ROADWAYS - SEE RSD 1101.02, SHEET 2 OF 14
- ALL MULTI-LANE FACILITIES POSTED < 60 MPH - SEE RSD 1101.02, SHEET 3 OF 14

WHEN USING LANE CLOSURES (RSD 1101.02), RETURN TRAFFIC TO EXISTING AND/OR CURRENT TEMPORARY TRAFFIC PATTERN UPON ACTIVITIES COMPLETION, UNLESS OTHERWISE NOTED IN THE PHASING.

WHEN INSTALLING AND ACTIVATING TEMPORARY AND FINAL SIGNALS, USE LANE CLOSURES (RSD 1101.02) AND LAW ENFORCEMENT.

COMPLETE PROPOSED CONSTRUCTION UP TO BUT NOT INCLUDING THE FINAL LAYER OF SURFACE COURSE UNTIL STATED TO PLACE FINAL LAYER IN THE PHASING.

PHASE 1 (TMP-4 AND TMP-5)

STEP 1:

NOTE: DURING PHASE 1, STEP 1, THE FOLLOWING TEMPORARY SIGNAL WILL BE NEEDED FOR ROADWAY WIDENING AND CONSTRUCTION ACCESS:

#03-0752T1 AT THE -L- (DRYSDALE DR EXT.) AND -Y1- (US 17/MILITARY CUTOFF RD) INTERSECTION

USING SHOULDER CLOSURES AND LANE CLOSURES COMPLETE CONSTRUCTION OF THE FOLLOWING:

- -L- (DRYSDALE DR EXT.) FROM THE TIE-IN WITH -Y4- (US 74/EASTWOOD RD) TO THE TIE-IN WITH -Y1- (US 17/MILITARY CUTOFF RD) (MAINTAIN SIDEWALK ACCESS AT ALL TIMES ALONG NORTH SIDE OF EASTWOOD RD USING TEMPORARY MEASURES, AS NEEDED - SEE GENERAL NOTE AA)
- NEW CROSS CITY TRAIL ALIGNMENT ON THE RIGHT SIDE OF -Y4- (US 74/ EASTWOOD RD) (MAINTAIN TRAIL ACCESS AT ALL TIMES USING TEMPORARY MEASURES - SEE GENERAL NOTE AA)
- -Y3-
- -Y6-
- CUL-DE-SAC ON -Y2- (CLIPPER LN)

PHASE 2 (TMP-6 THRU TMP-7)

STEP 1:

NOTE: DURING PHASE 2, THE FOLLOWING FINAL SIGNALS WILL BE NEEDED WHEN SHIFTING TO THE PHASE 2 TRAFFIC PATTERN:

#03-1153 AT THE -L- (DRYSDALE DR EXT.) AND -Y4- (US 74/EASTWOOD RD) INTERSECTION

#03-0752 AT THE -L- (DRYSDALE DR EXT.) AND -Y1- (US 17/MILITARY CUTOFF RD) INTERSECTION

#03-1152 AT THE -L- (DRYSDALE DR EXT.) AND -Y3- (DRYSDALE/CLIPPER CONNECTOR) INTERSECTION

ADDITIONAL SIGNAL HEAD AT THE EMERGENCY SIGNAL FOR THE FIRE STATION ON -Y1- (US 17/MILITARY CUTOFF RD) BETWEEN PARKER FARM RD AND -L- (DRYSDALE DR EXT.)

USING LANE CLOSURES, PLACE TEMPORARY PAVEMENT MARKINGS AND SHIFT TRAFFIC TO THE FINAL PATTERN.

STEP 2:

USING LANE CLOSURES, CLOSE LEFT TURN ACCESS FROM -Y4- (US 74/EASTWOOD RD) TO GALLEON LN AND REMOVE EXISTING ISLAND ON -Y4- (US 74/EASTWOOD RD). (SEE TMP-6)

STEP 3:

USING LANE CLOSURES, PLACE THE FINAL LAYER OF SURFACE COURSE AND FINAL PAVEMENT MARKINGS ACCORDING TO THE PAVEMENT MARKING PLAN AND OPEN -L- AND ALL -Y- LINES TO THE FINAL TRAFFIC PATTERN.

STEP 4:

REMOVE ALL WORK ZONE TRAFFIC CONTROL DEVICES.

APPROVED: Michelle Ward

DATE: 12/12/2019

SEAL

NORTH CAROLINA PROFESSIONAL SEAL 033789 ENGINEER MICHELLE WARD

DOCUMENT NOT CONSIDERED FINAL UNLESS ALL SIGNATURES COMPLETED

DIVISION OF HIGHWAYS · STATE OF NORTH CAROLINA · DEPARTMENT OF TRANSPORTATION · WORK ZONE TRAFFIC CONTROL

TEMPORARY TRAFFIC CONTROL PHASING

REVISIONS

PLOT DRIVER: NCDOT_pdf_color_eng_50.plt PENTABLE: NCDOT_tcp.tbl
USER: CHARNDEN DATE: 12/12/2019 TIME: 2:59:07 PM
FILE: pw:\\PWAPPTPA01:SouthEast_Tampa\Documents\0001166\CON0092456\V0000000024157\I\06.00_Project_Engineering_and_Design\U-5710A\Traffic\TrafficControl\TCP\U5710A_TC_TMP03.dgn

DocuSign Envelope ID: DBEC07C5-FCB9-47E0-A70C-EF63A3F6D0A5

PROJ. REFERENCE NO.	SHEET NO.
U-5710A	TMP-4

GRAPHIC SCALE
30 15 0 30 60
PLANS

HDR Engineering, Inc. of the Carolinas
555 Fayetteville St, Suite 900 Raleigh, N.C. 27601
N.C.B.E.L.S. License Number: F-0116

REVISIONS

PLOT DRIVER: NCDOT_pdf_color_eng.50.plt PENTABLE: NCDOT_Tcp.tbl
USER: CHARNDEN DATE: 12/12/2019 TIME: 2:59:17 PM
FILE: p:\\PWAPPTPA01\SouthEast_Tampa\Documents\000166\CON0092456\00000000241571\06.00_Project_Engineering_and_Design\U-5710A\Traffic\TrafficControl\TCP\U5710A_TC_TMP04.dgn

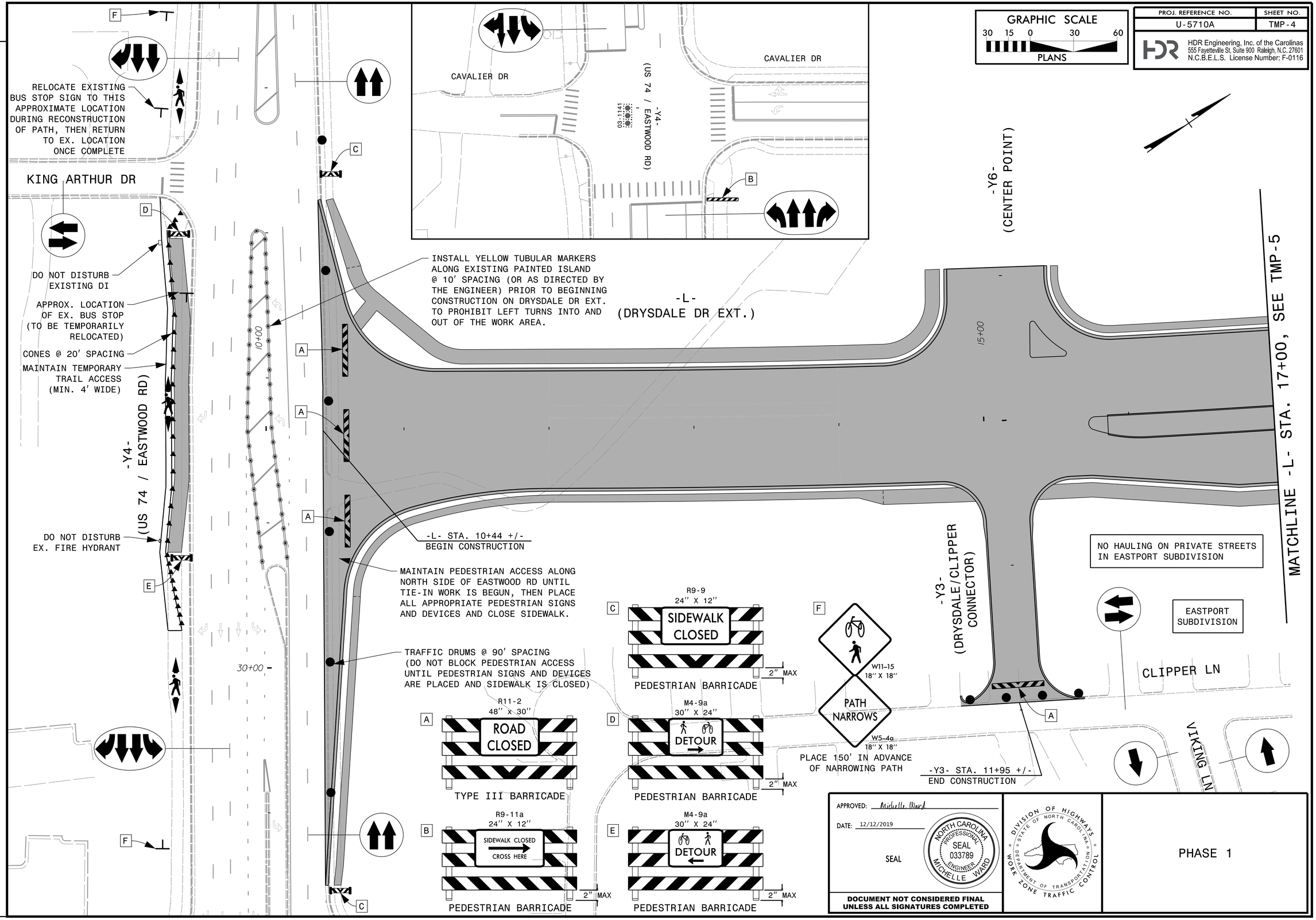

APPROVED: Michelle Ward

DATE: 12/12/2019

SEAL

NORTH CAROLINA PROFESSIONAL SEAL 033789 ENGINEER MICHELLE WARD

DOCUMENT NOT CONSIDERED FINAL UNLESS ALL SIGNATURES COMPLETED

DIVISION OF HIGHWAYS · STATE OF NORTH CAROLINA · DEPARTMENT OF TRANSPORTATION · WORK ZONE TRAFFIC CONTROL

PHASE 1

DocuSign Envelope ID: DBEC07C5-FCB9-47E0-A70C-EF63A3F6D0A5

PROJ. REFERENCE NO.	SHEET NO.
U-5710A	TMP-5

GRAPHIC SCALE
30 15 0 30 60
PLANS

HDR Engineering, Inc. of the Carolinas
555 Fayetteville St, Suite 900 Raleigh, N.C. 27601
N.C.B.E.L.S. License Number: F-0116

MATCHLINE -L- STA. 17+00
SEE TMP-4

-L- (DRYSDALE DR EXT.)

20+00

NO HAULING ON PRIVATE STREETS
IN EASTPORT SUBDIVISION

CONSTRUCT
CUL-DE-SAC

10+00

-Y2-
CLIPPER LN

EASTPORT
SUBDIVISION

R11-2
48" x 30"
ROAD
CLOSED
TYPE III BARRICADE

R11-2
48" x 30"
ROAD
CLOSED
TYPE III BARRICADE

TRAFFIC DRUMS
10' SPACING
FOR ACCESS LANES

22' 22'

60' +/-

-L- STA. 23+69 +/-
END CONSTRUCTION

R11-2
48" x 30"
ROAD
CLOSED
TYPE III BARRICADE

-Y1-
(US 17 / MILITARY CUTOFF RD)

TRAFFIC DRUMS
90' SPACING

-Y1-
(US 17 / MILITARY CUTOFF RD)

ONLY

R 30'

-L- STA. +76.75
56.75' RT

-L- STA. +75.96
5.00' RT

45+00

50+00

P2 1

-L- STA. +75.63
17.00' LT

TEMP

TEMPORARY SIGNAL
03-0752T1

DRYSDALE DR

P2	PAINT 24" WHITE STOPBAR LOCATION
1	-Y1- STA. 47+72.91, 9.85' LT to -Y1- STA. 47+72.94, 21.08' LT

APPROVED: Michelle Ward

DATE: 12/12/2019

SEAL

NORTH CAROLINA PROFESSIONAL SEAL 033789 ENGINEER MICHELLE WARD

DOCUMENT NOT CONSIDERED FINAL
UNLESS ALL SIGNATURES COMPLETED

DIVISION OF HIGHWAYS
STATE OF NORTH CAROLINA
DEPARTMENT OF TRANSPORTATION
WORK ZONE TRAFFIC CONTROL

PHASE 1

REVISIONS

PLOT DRIVER: NCDOT_pdf_color_eng.50.plt PENTABLE: NCDOT.tcp.tbl
USER: CHARNDEN DATE: 12/12/2019 TIME: 2:59:28 PM
FILE: p:\\PWAPPTPA01:SouthEast_Tampa\Documents\000166\CON0092456\00000000024157\06.00_Project_Engineering_and_Design\U-5710A\Traffic\TrafficControl\TCP\U5710A_TC_TMP05.dgn

DocuSign Envelope ID: 8500058E-1FC4-4799-8BE6-796CDB3D8B39

PROJ. REFERENCE NO.	SHEET NO.
U-5710A	TMP-6

GRAPHIC SCALE
30 15 0 30 60
PLANS

HDR Engineering, Inc. of the Carolinas
555 Fayetteville St, Suite 900 Raleigh, N.C. 27601
N.C.B.E.L.S. License Number: F-0116

KING ARTHUR DR

ONLY

-Y4-
(US 74 / EASTWOOD RD)

PLACE TEMPORARY MARKINGS IN THE FINAL PATTERN ON -L-, -Y3-, -Y4-, -Y6-, AND KING ARTHUR DR (SEE FINAL PAVEMENT MARKING PLAN)

FINAL SIGNAL
03-1153

-L-
(DRYSDALE DR EXT.)

FINAL SIGNAL
03-1152

-Y6-
(CENTER POINT)

ONLY

15+00

-L- STA. 17+00, SEE TMP-7

MATCHLINE -L-

EASTPORT SUBDIVISION

-Y3-
(DRYSDALE/CLIPPER CONNECTOR)

CLIPPER LN

VIKING LN

30+00

CLOSE LEFT TURN ACCESS TO GALLEON LN, AND REMOVE EXISTING ISLAND. THEN OPEN EXTENDED DUAL TURN LANES ONTO -Y1- (US 17/MILITARY CUTOFF RD) TO FINAL PATTERN.

GALLEON LN

NO HAULING ON PRIVATE STREETS IN EASTPORT SUBDIVISION

APPROVED: Michelle Ward

DATE: 11/26/2019

SEAL

NORTH CAROLINA PROFESSIONAL SEAL 033789 ENGINEER MICHELLE WARD

DOCUMENT NOT CONSIDERED FINAL UNLESS ALL SIGNATURES COMPLETED

DIVISION OF HIGHWAYS · STATE OF NORTH CAROLINA · DEPARTMENT OF TRANSPORTATION · WORK ZONE TRAFFIC CONTROL

PHASE 2

REVISIONS

PLOT DRIVER: NCDOT_pdf_color_eng_50.plt PENTABLE: NCDOT_tcp.tbl
USER: CHARNDEN DATE: 11/26/2019 TIME: 4:54:33 PM
FILE: pw:\\PWAPPTPA01:SouthEast_Tampa\Documents\000166\CON0092456\0000000002415711\06.00_Project_Engineering_and_Design\U-5710A\Traffic\TrafficControl\TCP\U5710A_TC_TMP06.dgn

DocuSign Envelope ID: 8500058E-1FC4-4799-8BE6-796CDB3D8B39

PLOT DRIVER: NCDOT_pdf_color_eng_50.plt PENTABLE: NCDOT_tcp.tbl
USER: CHARNDEN DATE: 11/26/2019 TIME: 4:54:45 PM
FILE: pw:\PWAPPTPA01:SouthEast_Tampa\Documents\0001166\CON0092456\0000000002415711\06.00_Project_Engineering_and_Design\U-5710A\Traffic\TrafficControl\TCP\U5710A_TC_TMP07.dgn

REVISIONS

PROJ. REFERENCE NO.	SHEET NO.
U-5710A	TMP-7

GRAPHIC SCALE
30 15 0 30 60
PLANS

HDR Engineering, Inc. of the Carolinas
555 Fayetteville St, Suite 900 Raleigh, N.C. 27601
N.C.B.E.L.S. License Number: F-0116

MATCHLINE -L- STA. 17+00
SEE TMP-6

ONLY

20+00

-L-
(DRYSDALE DR EXT.)

PLACE TEMPORARY MARKINGS IN THE FINAL PATTERN ON -L-, -Y1-, AND EXISTING DRYSDALE DR (SEE FINAL PAVEMENT MARKING PLAN)

NO HAULING ON PRIVATE STREETS IN EASTPORT SUBDIVISION

10+00

-Y2-
CLIPPER LN

EASTPORT SUBDIVISION

-Y1-
(US 17 / MILITARY CUTOFF RD)

FINAL SIGNAL
03-0752

ONLY

45+00

DRYSDALE DR

-Y1-
(US 17 / MILITARY CUTOFF RD)

ONLY

50+00

APPROVED: Michelle Ward

DATE: 11/26/2019

SEAL

NORTH CAROLINA PROFESSIONAL SEAL 033789 ENGINEER MICHELLE WARD

DOCUMENT NOT CONSIDERED FINAL UNLESS ALL SIGNATURES COMPLETED

DIVISION OF HIGHWAYS · STATE OF NORTH CAROLINA · DEPARTMENT OF TRANSPORTATION · WORK ZONE TRAFFIC CONTROL

PHASE 2

DocuSign Envelope ID: 6239EA99-43CF-4DDC-8215-3F82B08A047C

T.I.P.: U-5710A

CONTRACT: DC00277

STATE OF NORTH CAROLINA
DEPARTMENT OF TRANSPORTATION

PAVEMENT MARKING PLAN

NEW HANOVER COUNTY

LOCATION: NEW LOCATION NORTHWESTERN QUADRANT CONNECTION BETWEEN US 74 (EASTWOOD RD.) AND US 17 (MILITARY CUTOFF RD.)

TIP NO.	SHEET NO.
U-5710A	PMP-1

APPROVED: Ron King

DATE: 12/5/2019

SEAL

NORTH CAROLINA PROFESSIONAL SEAL 022959 ENGINEER RONALD W. KING

DOCUMENT NOT CONSIDERED FINAL UNLESS ALL SIGNATURES COMPLETED

INDEX

SHEET NO.	DESCRIPTION
PMP-1	PAVEMENT MARKING PLAN TITLE, GERERAL NOTES, ROADWAY STANDARD DRAWINGS, INDEX, AND PAVEMENT MARKING SCHEDULE
PMP-1A	ALTERNATE CURB RAMP DESIGNS
PMP-1B	HI-VISIBILITY CROSSWALKS NO-TRACK MARKING GUIDANCE
PMP-2 THRU PMP-9	PAVEMENT MARKING DETAILS

GENERAL NOTES

THE FOLLOWING GENERAL NOTES APPLY AT ALL TIMES FOR THE DURATION OF THE CONSTRUCTION PROJECT, EXCEPT WHEN OTHERWISE NOTED IN THE PLAN, OR DIRECTED BY THE ENGINEER.

A) INSTALL PAVEMENT MARKINGS AND PAVEMENT MARKERS ON THE FINAL SURFACE AS FOLLOWS:

ROAD NAME	MARKING	MARKER
ALL ROADS	THERMOPLASTIC	RAISED

B) TIE PROPOSED PAVEMENT MARKING LINES TO EXISTING PAVEMENT MARKING LINES.

C) REMOVE/REPLACE ANY CONFLICTING/DAMAGED PAVEMENT MARKINGS AND MARKERS.

D) PASSING ZONES WILL BE DETERMINED IN THE FIELD AND MUST BE APPROVED BY THE ENGINEER.

E) UNLESS OTHERWISE SPECIFIED, HEATED-IN-PLACE THERMOPLASTIC MAY BE USED IN LIEU OF EXTRUDED THERMOPLASTIC FOR STOP BARS, SYMBOLS, CHARACTERS AND DIAGONALS. IF HEATED-IN-PLACE IS USED, IT SHALL BE PAID FOR USING THE EXTRUDED THERMOPLASTIC PAY ITEM.

PAVEMENT MARKING SCHEDULE

T2	THERMOPLASTIC 24″ WHITE STOPBAR (90 MIL)	TR	THERMOPLASTIC 8″ WHITE SOLID LANE LINE (90 MIL)
T3	THERMOPLASTIC 24″ WHITE CROSSWALK LINE (90 MIL)	TU	THERMOPLASTIC 12″ WHITE DIAGONAL (90 MIL)
T8	THERMOPLASTIC 4″ 2′-6′/SP. WHITE MINI-SKIP (90 MIL)	TV	THERMOPLASTIC 12″ YELLOW DIAGONAL (90 MIL)
T9	THERMOPLASTIC 4″ 2′-6′/SP. YELLOW MINI-SKIP (90 MIL)	TX	THERMOPLASTIC 4″ 3′-9′/SP. YELLOW MINI-SKIP (90 MIL)
T13	THERMOPLASTIC 8″ 3′-9′/SP. WHITE MINI-SKIP (90 MIL)	UA	THERMOPLASTIC LEFT TURN ARROW (90 MIL)
TA	THERMOPLASTIC 4″ WHITE EDGELINE (90 MIL)	UB	THERMOPLASTIC RIGHT TURN ARROW (90 MIL)
TB	THERMOPLASTIC 4″ YELLOW EDGELINE (90 MIL)	UC	THERMOPLASTIC STRAIGHT ARROW (90 MIL)
TC	THERMOPLASTIC 4″ 10′-30′/SP. WHITE SKIP (90 MIL)	UE	THERMOPLASTIC COMBO RIGHT-STRAIGHT ARROW (90 MIL)
TD	THERMOPLASTIC 4″ 3′-9′/SP. WHITE MINI-SKIP (90 MIL)	UI	THERMOPLASTIC ALPHANUMERIC CHARACTER (90 MIL)
TE	THERMOPLASTIC 4″ WHITE SOLID LANE LINE (90 MIL)	UN	THERMOPLASTIC 24″ YIELD LINE TRIANGLE (90 MIL)
TI	THERMOPLASTIC 4″ YELLOW DOUBLE CENTER (90 MIL)		
TN	THERMOPLASTIC 8″ WHITE GORELINE (90 MIL)	MA	YELLOW & YELLOW RAISED MARKER
TO	THERMOPLASTIC 8″ WHITE DIAGONAL (90 MIL)	MB	CRYSTAL & RED RAISED MARKER
TP	THERMOPLASTIC 8″ YELLOW DIAGONAL (90 MIL)		

ROADWAY STANDARD DRAWING

THE FOLLOWING ROADWAY STANDARDS AS APPEAR IN "ROADWAY STANDARD DRAWINGS" - PROJECT SERVICES UNIT - N.C. DEPARTMENT OF TRANSPORTATION - RALEIGH, N.C., DATED JANUARY 2018 ARE APPLICABLE TO THIS PROJECT AND BY REFERENCE HEREBY ARE CONSIDERED A PART OF THESE PLANS:

STD. NO.	TITLE
1205.01	PAVEMENT MARKINGS - LINE TYPES AND OFFSETS
1205.02	PAVEMENT MARKINGS - TWO-LANE AND MULTILANE ROADWAYS
1205.04	PAVEMENT MARKINGS - INTERSECTIONS
1205.05	PAVEMENT MARKINGS - TURN LANES
1205.06	PAVEMENT MARKINGS - LANE DROPS
1205.07	PAVEMENT MARKINGS - PEDESTRIAN CROSSWALKS
1205.08	PAVEMENT MARKINGS - SYMBOLS AND WORD MESSAGES
1205.09	PAVEMENT MARKINGS - PAINTED ISLANDS
1250.01	RAISED PAVEMENT MARKERS - INSTALLATION SPACING
1251.01	RAISED PAVEMENT MARKERS - PERMANENT AND TEMPORARY
1264.01	OBJECT MARKERS - TYPES
1264.02	OBJECT MARKERS - INSTALLATION

PLAN REVIEWED BY: N.C.D.O.T. SIGNING AND DELINEATION UNIT

AYMAN ALQUDWAH, P.E. SIGNING & DELINEATION REGIONAL ENGINEER

MATTHEW TRACEY, P.E. SIGNING & DELINEATION PROJECT DESIGN ENGINEER

STATE OF NORTH CAROLINA DEPARTMENT OF TRANSPORTATION

PLAN PREPARED BY: HDR ENGINEERING, INC. OF THE CAROLINAS

RON KING, P.E. SIGNING & DELINEATION PROJECT DESIGN ENGINEER

CHRIS HARNDEN SIGNING & DELINEATION PROJECT DESIGN TECHNICIAN

HDR Engineering, Inc. of the Carolinas
555 Fayetteville St, Suite 900 Raleigh, N.C. 27601
N.C.B.E.L.S. License Number: F-0116

PLOT DRIVER: NCDOT_pdf_color_eng_50.plt PENTABLE: NCDOT_tcp.tbl
USER: CHARNDEN DATE: 12/4/2019 TIME: 5:37:43 PM
FILE: pw:\PWAPPTPA01:SouthEast_Tampa\Documents\000166\CON00092456\D00000000241571\06.00_Project_Engineering_and_Design\U-5710A\Traffic\Pavement Markings\U5710A_PMP_PMP01.dgn

DocuSign Envelope ID: 6154D14F-C73E-416C-A76F-F73A1B088343

5/14/99

PROJECT REFERENCE NO.	SHEET NO.
U-5710A	PMP-1A

PAY LIMITS FOR 1 CURB RAMP

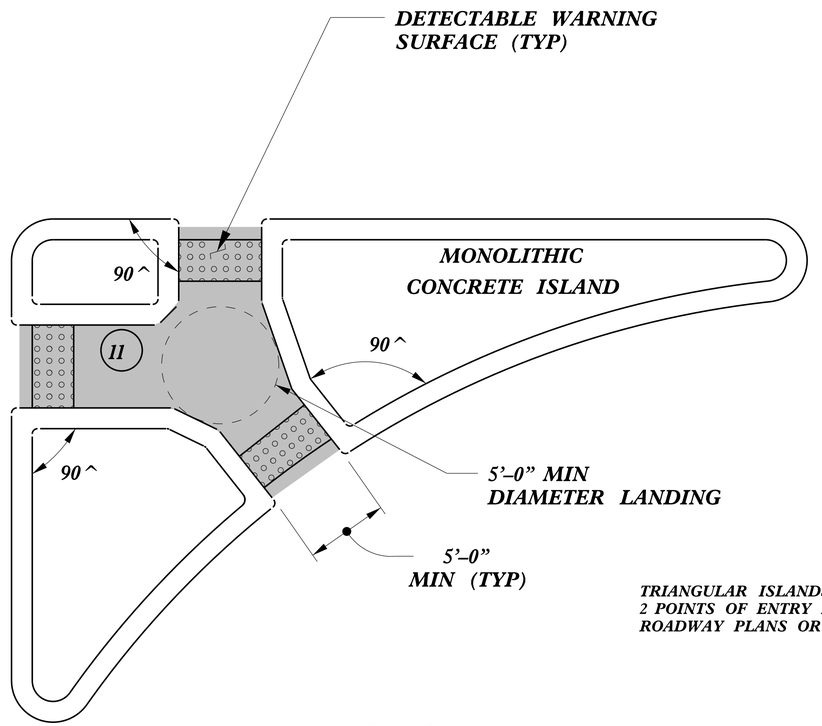

TRIANGULAR ISLANDS MAY BE CONSTRUCTED WITH ONLY 2 POINTS OF ENTRY AND EXIT AS SHOWN IN THE ROADWAY PLANS OR AS DIRECTED BY THE ENGINEER.

TRIANGULAR ISLAND WITH CUT THROUGH

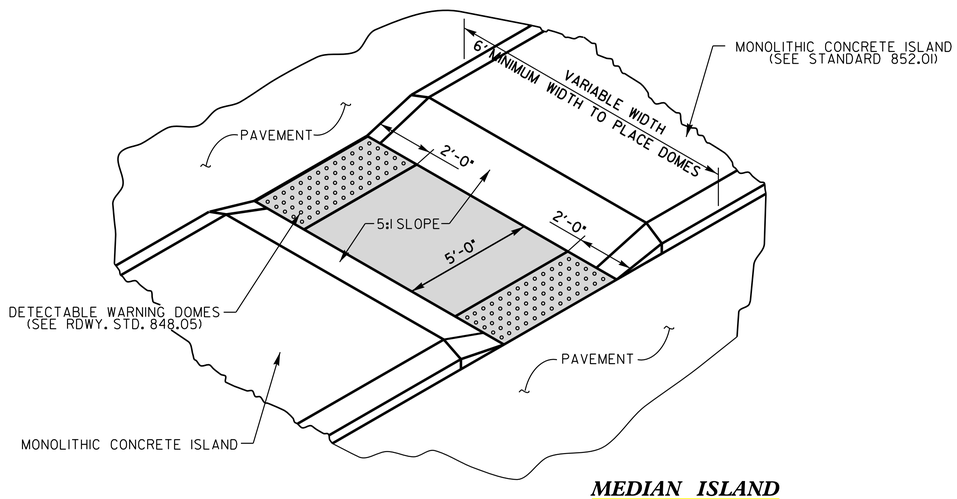

MEDIAN ISLAND WITH CUT THROUGH

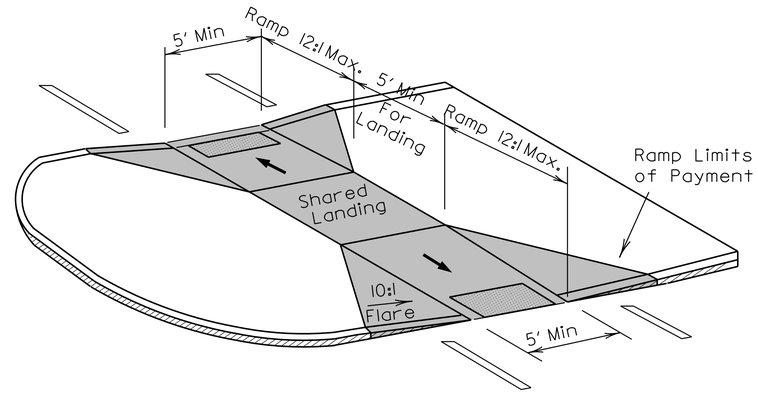

MEDIAN ISLAND CURB RAMPS

CONTRACT STANDARDS AND DEVELOPMENT UNIT
Office 919-707-6950 FAX 919-250-4119

CURB RAMPS

Median or Turn Lane Islands

ORIGINAL BY: J.S. HOWERTON DATE: 7/7/11
MODIFIED BY: DATE:
CHECKED BY: DATE:
FILE SPEC.: stds/2012CurbRamp/CurbRampDetails.dgn

$$$$SYSTIME$$$$
$$$$DGN$$$$
$$$$USERNAME$$$$

DocuSign Envelope ID: 6154D14F-C73E-416C-A76F-F73A1B088343

STATE OF
NORTH CAROLINA
DEPT. OF TRANSPORTATION
DIVISION OF HIGHWAYS
RALEIGH, N.C.

2-19

ENGLISH TYPICAL DRAWING FOR
PAVEMENT MARKINGS
HI-VISIBILITY CROSSWALKS
NO-TRACK MARKING GUIDANCE

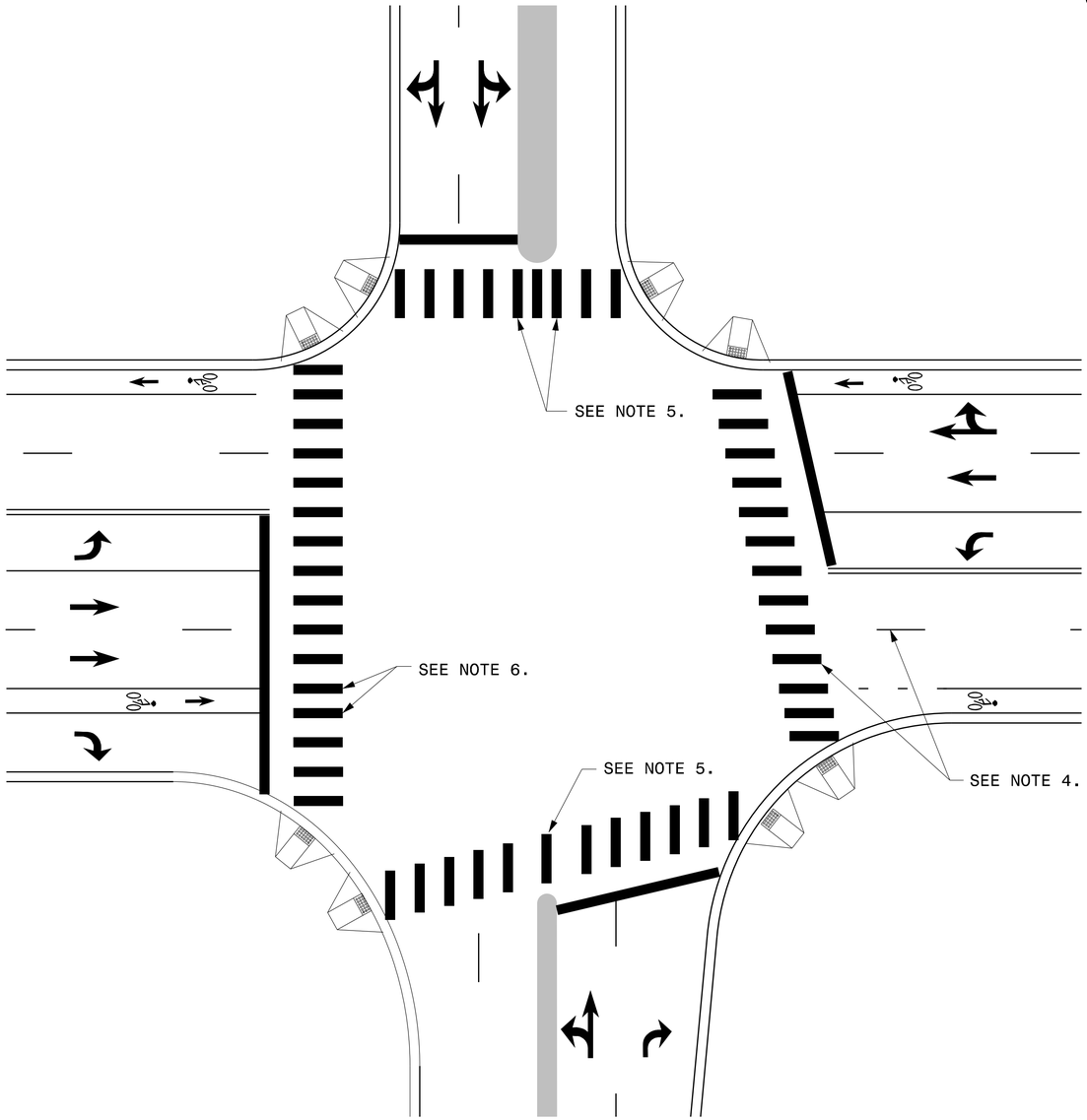

CROSSWALK INTERSECTION DETAIL

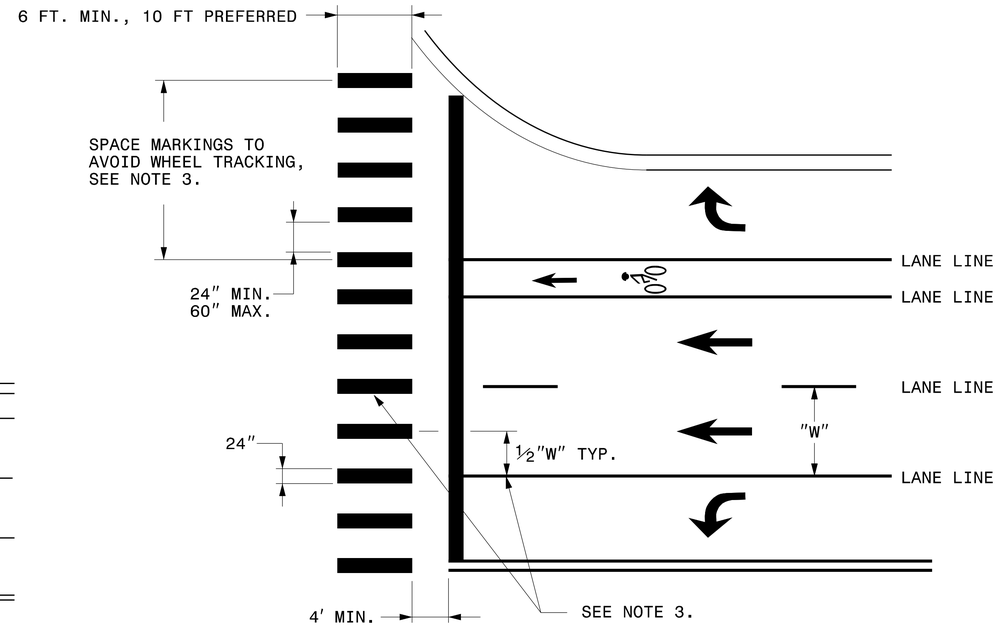

CROSSWALK MARKING DETAIL

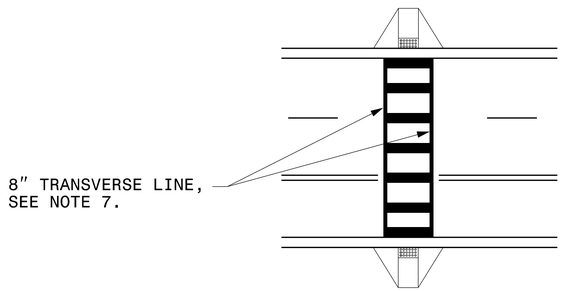

MID-BLOCK CROSSWALK DETAIL

GENERAL NOTES:

1- THE GUIDANCE IN THIS DETAIL IS TO BE USED WHEN NO-TRACK SPACING OF HI-VISIBILITY MARKINGS IS REQUESTED.

2- USE THE GUIDANCE SHOWN ON THE ABOVE DETAILS IN CONJUNCTION WITH PAVEMENT MARKING GUIDANCE SHOWN ON ROADWAY STANDARD DRAWINGS 1205.01 AND 1205.07.

3- PLACE MARKINGS TO AVOID WHEELPATH OF VEHICLES. MARKINGS TYPICALLY WILL BE LOCATED CENTERED AT THE LANE LINES AND EDGE LINES WITH ONE ADDITIONAL MARKING CENTERED IN THE MIDDLE OF THE LANE. AT WIDE LANE WIDTHS DUE TO TAPERS AND LARGE RADII, LOCATE MARKINGS AT BEST SPACING TO AVOID WHEEL TRACKING. THE SPACE BETWEEN MARKINGS SHALL NOT BE LESS THAN 24 INCHES OR GREATER THAN 60 INCHES.

4- WHERE THE CROSSWALK IS SKEWED TO THE LANE LINES, THE MARKINGS SHOULD BE PARALLEL TO THE LANE LINES.

5- PLACE MARKINGS ON BOTH EDGES OF THE NOSE OF A MEDIAN. FOR NARROW MEDIANS LESS THAN 4 FEET, A SINGLE MARKING MAY BE USED. FOR WIDE MEDIANS, INSTALL ADDITIONAL MARKINGS IN THE MEDIAN AREA. THE SPACE BETWEEN THE MARKINGS SHALL NOT TO BE LESS THAN 24 INCHES OR GREATER THAN 60 INCHES.

6- LOCATE MARKINGS CENTERED ON BICYCLE LANE LINES. MARKINGS SHALL NOT BE LOCATED IN THE CENTER OF THE BICYCLE PATH.

7- INCLUDE 8″ TRANSVERSE LINES WITH 24″ LONGITUDINAL MARKINGS AT MID-BLOCK CROSSINGS.

STATE OF
NORTH CAROLINA
DEPT. OF TRANSPORTATION
DIVISION OF HIGHWAYS
RALEIGH, N.C.

2-19

ENGLISH TYPICAL DRAWING FOR
PAVEMENT MARKINGS
HI-VISIBILITY CROSSWALKS
NO-TRACK MARKING GUIDANCE

SHEET 1 OF 1
PMP-1B

SHEET 1 OF 1
PMP-1B

2-28-19

DocuSign Envelope ID: 6239EA99-43CF-4DDC-8215-3F82B08A047C

HDR Engineering, Inc. of the Carolinas
555 Fayetteville St, Suite 900 Raleigh, N.C. 27601
N.C.B.E.L.S. License Number: F-0116

TIP NO.	SHEET NO.
U-5710A	PMP-2

APPROVED: Ron King

DATE: 12/5/2019

SEAL

NORTH CAROLINA PROFESSIONAL SEAL 022959 ENGINEER RONALD W. KING

DOCUMENT NOT CONSIDERED FINAL UNLESS ALL SIGNATURES COMPLETED

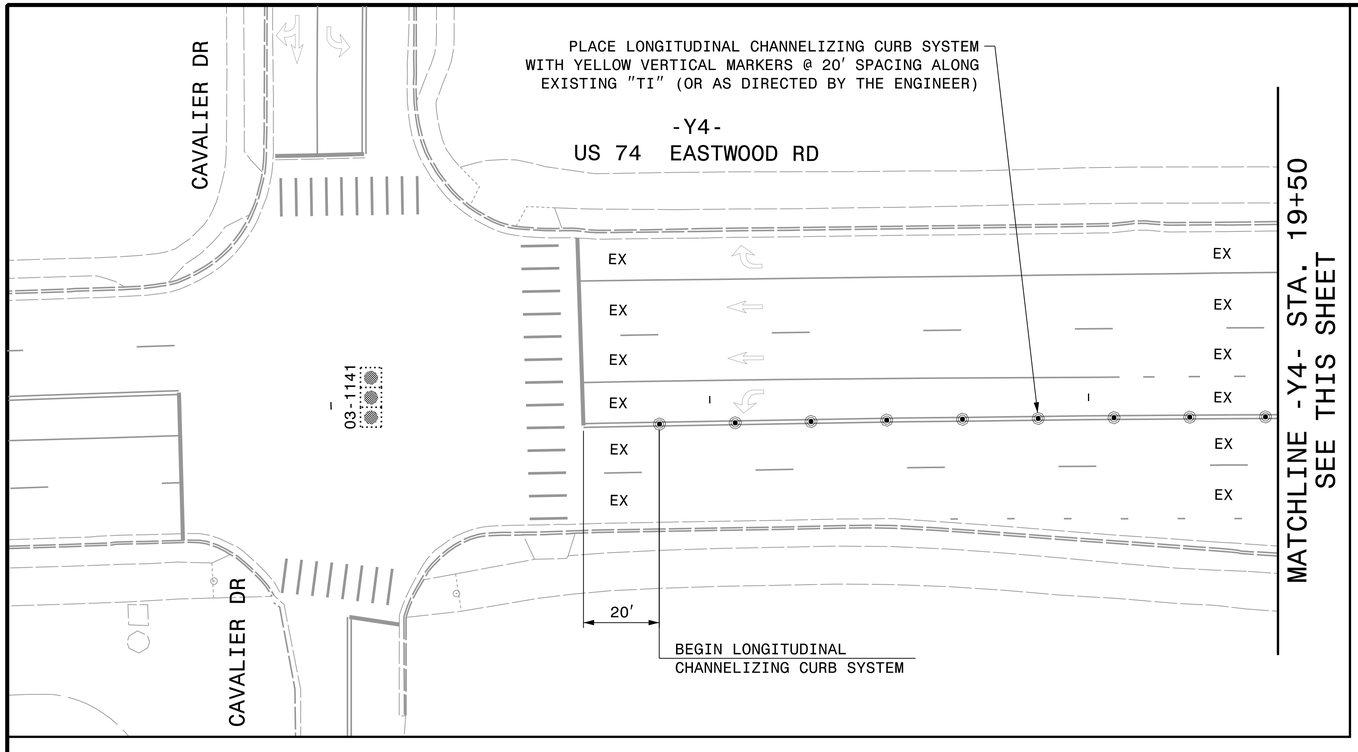

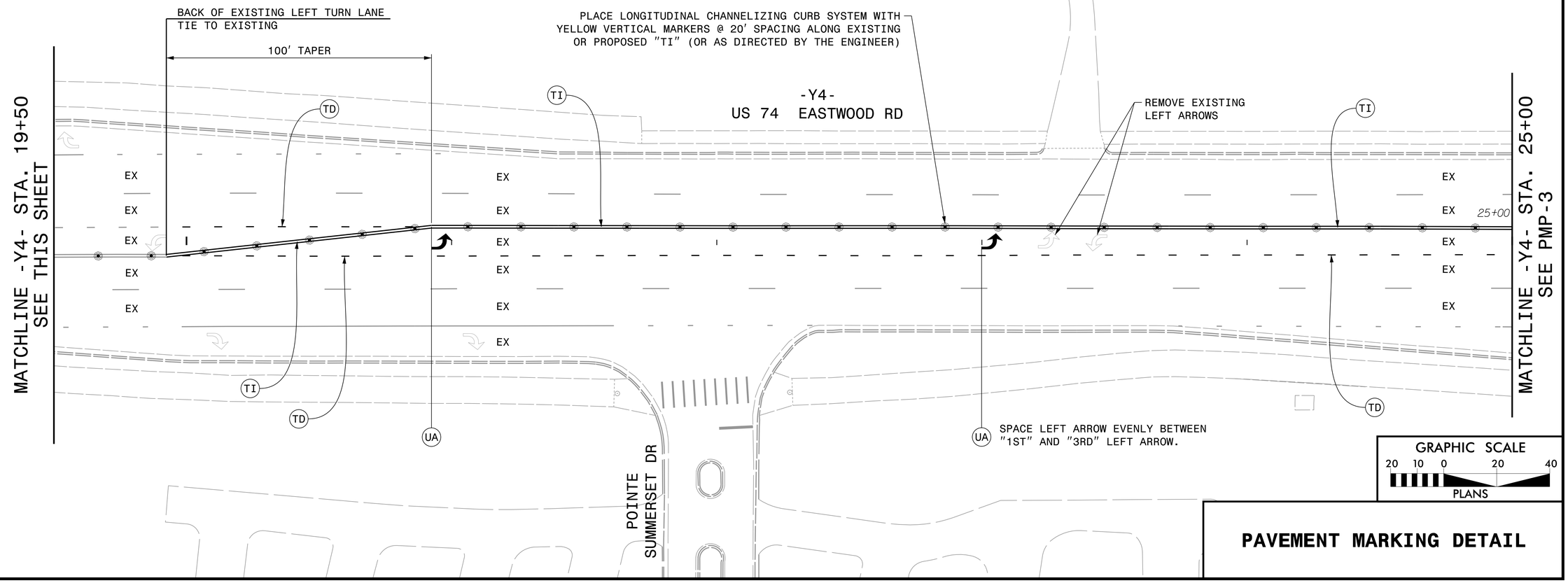

GRAPHIC SCALE
20 10 0 20 40
PLANS

PAVEMENT MARKING DETAIL

PLOT DRIVER: NCDOT_pdf_color_eng_50.plt PENTABLE: NCDOT_tcp.tbl
USER: CHARNDEN DATE: 12/4/2019 TIME: 5:37:51 PM
FILE: pw:\\PWAPPTPA01:SouthEast_Tampa\Documents\000166\CON0092456\D0000000024157I\06.00_Project_Engineering_and_Design\U-5710A\Traffic\Pavement Markings\U5710A_PMP_PMP02.dgn

DocuSign Envelope ID: 6239EA99-43CF-4DDC-8215-3F82B08A047C

HDR Engineering, Inc. of the Carolinas
555 Fayetteville St, Suite 900 Raleigh, N.C. 27601
N.C.B.E.L.S. License Number: F-0116

TIP NO.	SHEET NO.
U-5710A	PMP-3

APPROVED: Ron King

DATE: 12/5/2019

SEAL

NORTH CAROLINA PROFESSIONAL SEAL 022959 ENGINEER RONALD W. KING

DOCUMENT NOT CONSIDERED FINAL UNLESS ALL SIGNATURES COMPLETED

CURB RAMP LOCATIONS (CENTER OF RAMP AT FACE OF CURB)	
1	-L- STA. 10+68.66, 72.16′ LT
2	-L- STA. 10+68.68, 83.50′ RT

T2 STOPBAR LOCATIONS	
1	-L- STA. 10+76.96, 16.50′ LT to -L- STA. 10+76.96, 58.74′ LT
2	-Y4- STA. 27+97.26, 8.25′ LT to -Y4- STA. 27+97.26, 3.75′ RT
3	-Y4- STA. 29+33.56, 15.17′ LT to -Y4- STA. 29+33.55, 55.74′ LT

FOR ALL CROSSWALKS, USE ROADWAY STANDARD DRAWING ON PMP-1B. ALL SPACING IS 6′ ON CENTER, UNLESS SHOWN DIFFERENTLY ON THIS SHEET.

MATCHLINE -L- STA. 11+50, SEE PMP-5

MATCHLINE -Y4- STA. 25+00, SEE PMP-2

MATCHLINE -Y4- STA. 30+65, SEE PMP-4

-L- DRYSDALE EXT.

-Y4- US 74 EASTWOOD RD

KING ARTHUR DR

PLACE LONGITUDINAL CHANNELIZING CURB SYSTEM WITH YELLOW VERTICAL MARKERS @ 20′ SPACING ALONG EXISTING OR PROPOSED "TI" (OR AS DIRECTED BY THE ENGINEER)

PLACE LONGITUDINAL CHANNELIZING CURB SYSTEM WITH YELLOW VERTICAL MARKERS @ 10′ SPACING ON THE INSIDE EDGE OF PROPOSED "TI" (OR AS DIRECTED BY THE ENGINEER)

PLACE LONGITUDINAL CHANNELIZING CURB SYSTEM WITH WHITE VERTICAL MARKERS @ 10′ SPACING ON THE INSIDE EDGE OF PROPOSED "TN" (OR AS DIRECTED BY THE ENGINEER)

REMOVE EXISTING LEFT ARROW

-Y4- STA. +56.98 11.91′ LT

-Y4- STA. +65.78 15.28′ LT

-Y4- STA. +97.26 14.85′ LT

-Y4- STA. +67.64 10.79′ RT

-Y4- STA. +48.38 13.59′ RT

-Y4- STA. +38.12 0.55′ RT

-Y4- STA. +62.07 70.68′ RT

03-1153

GRAPHIC SCALE
20 10 0 20 40
PLANS

PAVEMENT MARKING DETAIL

PLOT DRIVER: NCDOT_pdf_color_eng_50.plt PENTABLE: NCDOT_tcp.tbl
USER: CHARNDEN DATE: 12/4/2019 TIME: 5:38:00 PM
FILE: p:\\PWAPPTPA01:SouthEast_Tampa\Documents\000166\CON0092456\0000000024157\06.00_Project_Engineering_and_Design\U-5710A\Traffic\Pavement Markings\U5710A_PMP_PMP03.dgn

DocuSign Envelope ID: 6239EA99-43CF-4DDC-8215-3F82B08A047C

HDR Engineering, Inc. of the Carolinas
555 Fayetteville St, Suite 900 Raleigh, N.C. 27601
N.C.B.E.L.S. License Number: F-0116

TIP NO.	SHEET NO.
U-5710A	PMP-4

APPROVED: Ron King

DATE: 12/5/2019

SEAL

NORTH CAROLINA PROFESSIONAL SEAL 022959 ENGINEER RONALD W. KING

DOCUMENT NOT CONSIDERED FINAL UNLESS ALL SIGNATURES COMPLETED

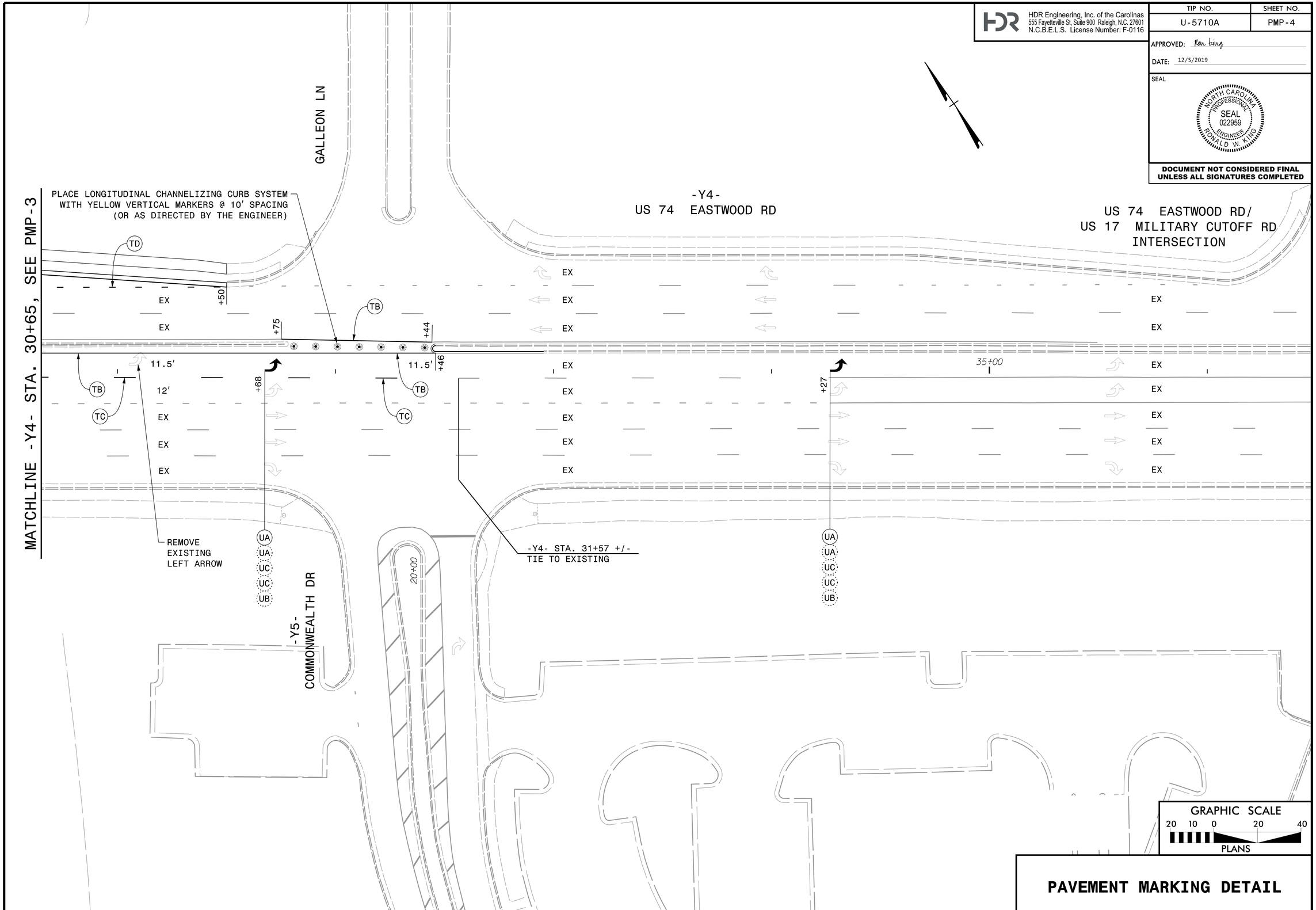

PAVEMENT MARKING DETAIL

PLOT DRIVER: NCDOT_pdf_color_eng_50.plt PENTABLE: NCDOT_tcp.tbl
USER: CHARNDEN DATE: 12/4/2019 TIME: 5:38:08 PM
FILE: pw:\\PWAPPTPA01:SouthEast_Tampa\Documents\000166\CON0092456\000000000241571\06.00_Project_Engineering_and_Design\U-5710A\Traffic\Pavement Markings\U5710A_PMP_PMP04.dgn

DocuSign Envelope ID: 6239EA99-43CF-4DDC-8215-3F82B08A047C

CURB RAMP LOCATIONS (CENTER OF RAMP AT FACE OF CURB)	TRIANGULAR ISLAND CUT THROUGH (CENTER OF PATHS AT FACE OF ISLAND)
1 -Y6- STA. 11+47.97, 52.80′ RT	7 -Y6- STA. 11+43.50, 33.75′ LT
2# -L- STA. 14+44.55, 44.32′ LT	-Y6- STA. 11+48.94, 21.00′ LT
3# -L- STA. 14+70.13, 42.51′ RT	
4# -Y3- STA. 10+50.82, 24.09′ RT	
5# -Y3- STA. 10+52.33, 24.42′ LT	
6 -Y6- STA. 11+30.52, 46.22′ LT	
# OVERSIZED CURB RAMP (8′ WIDTH MIN.)	

FOR ALL CROSSWALKS, USE ROADWAY STANDARD DRAWING ON PMP-1B. ALL SPACING IS 6′ ON CENTER, UNLESS SHOWN DIFFERENTLY ON THIS SHEET.

HDR Engineering, Inc. of the Carolinas
555 Fayetteville St, Suite 900 Raleigh, N.C. 27601
N.C.B.E.L.S. License Number: F-0116

TIP NO.	SHEET NO.
U-5710A	PMP-5

APPROVED: Ron King

DATE: 12/5/2019

SEAL

NORTH CAROLINA PROFESSIONAL SEAL 022959 ENGINEER RONALD W. KING

DOCUMENT NOT CONSIDERED FINAL UNLESS ALL SIGNATURES COMPLETED

-Y6- CENTER POINT

PLACED BY OTHERS

TRIANGULAR ISLAND WITH CUT THROUGH (SEE PMP-1A)

-L- DRYSDALE EXT.

MATCHLINE -L- STA. 11+50, SEE PMP-3

MATCHLINE -L- STA. 17+00, SEE PMP-6

-Y3- DRYSDALE/CLIPPER CONNECTOR

CLIPPER LN

ONLY

-L- STA. +19.62 9.65′ LT

15+00

03-1152

T2 STOPBAR LOCATIONS
1 -Y6- STA. 11+30.83, 0.02′ RT to -Y6- STA. 11+32.12, 38.72′ RT
2 -L- STA. 14+37.93, 12.50′ LT to -L- STA. 14+37.93, 0.50′ LT
3 -L- STA. 14+52.56, 16.50′ RT to -L- STA. 14+52.56, 40.50′ RT
4 -Y3- STA. 10+59.40, 5.00′ RT to -Y3- STA. 10+59.40, 17.47′ LT
5 -L- STA. 15+60.00, 0.50′ LT to -L- STA. 15+60.00, 40.50′ LT

*T3 AT 5′ SPACING FOR THIS CROSSWALK

GRAPHIC SCALE
20 10 0 20 40
PLANS

PAVEMENT MARKING DETAIL

PLOT DRIVER: NCDOT_pdf_color_eng_50.plt PENTABLE: NCDOT_tcp.tbl
USER: CHARNDEN DATE: 12/4/2019 TIME: 5:38:15 PM
FILE: pw:\\PWAPPTPA01:SouthEast_Tampa\Documents\00166\CON0092456\00000000024157\1\06.00_Project_Engineering_and_Design\U-5710A\Traffic\Pavement Markings\U5710A_PMP_PMP05.dgn

DocuSign Envelope ID: 6239EA99-43CF-4DDC-8215-3F82B08A047C

HDR Engineering, Inc. of the Carolinas
555 Fayetteville St, Suite 900 Raleigh, N.C. 27601
N.C.B.E.L.S. License Number: F-0116

TIP NO.	SHEET NO.
U-5710A	PMP-6

APPROVED: Ron King

DATE: 12/5/2019

SEAL

NORTH CAROLINA PROFESSIONAL SEAL 022959 ENGINEER RONALD W. KING

DOCUMENT NOT CONSIDERED FINAL UNLESS ALL SIGNATURES COMPLETED

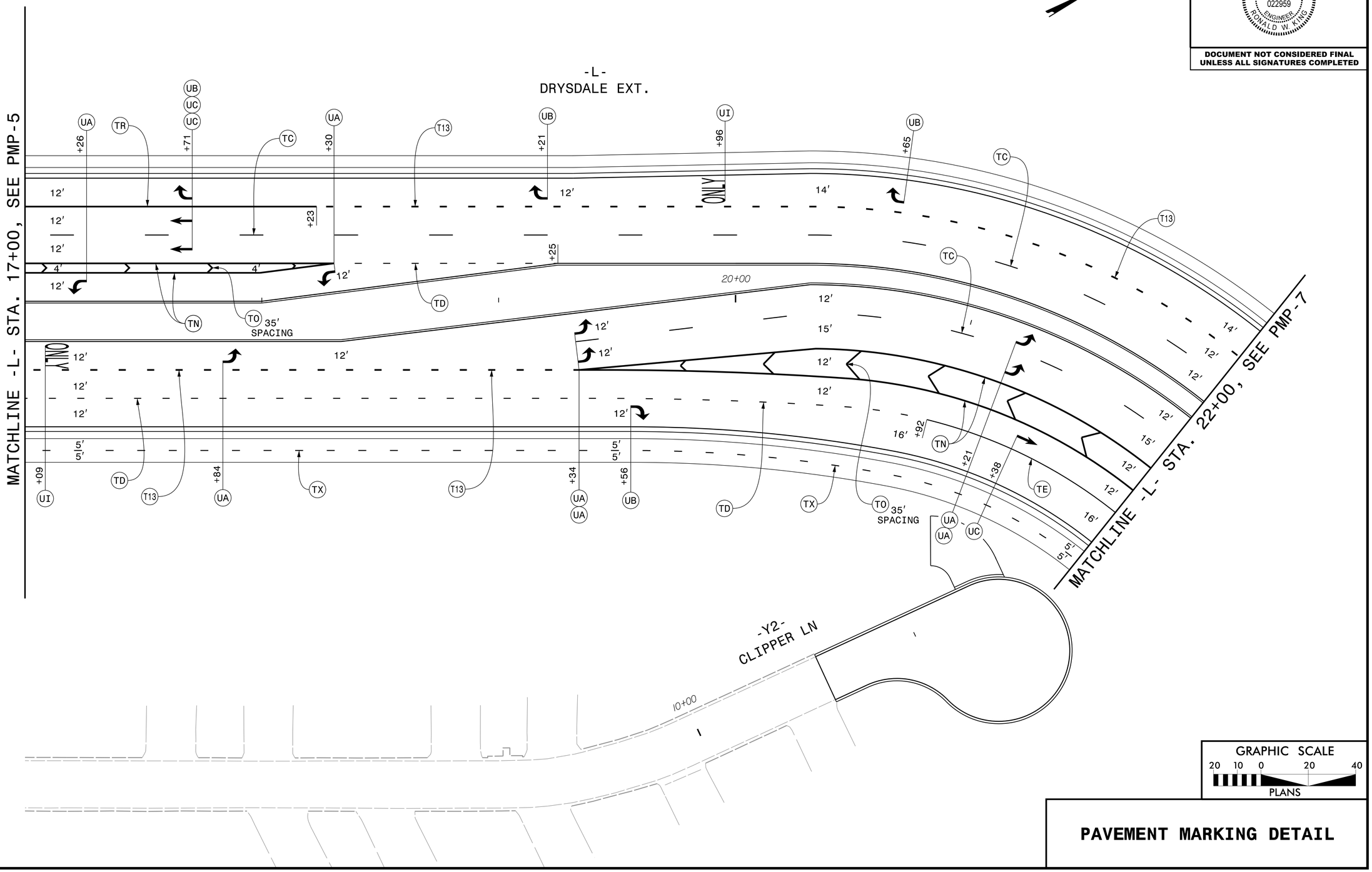

GRAPHIC SCALE
20 10 0 20 40
PLANS

PAVEMENT MARKING DETAIL

PLOT DRIVER: NCDOT_pdf_color_eng_50.plt PENTABLE: NCDOT_tcp.tbl
USER: CHARNDEN DATE: 12/4/2019 TIME: 5:38:24 PM
FILE: pw:\\PWAPPTPA01:SouthEast_Tampa\Documents\000166\CON0092456\V00000000241571\06.00_Project_Engineering_and_Design\U-5710A\Traffic\Pavement Markings\U5710A_PMP_PMP06.dgn

DocuSign Envelope ID: 6239EA99-43CF-4DDC-8215-3F82B08A047C

HDR Engineering, Inc. of the Carolinas
555 Fayetteville St, Suite 900 Raleigh, N.C. 27601
N.C.B.E.L.S. License Number: F-0116

TIP NO.	SHEET NO.
U-5710A	PMP-7

APPROVED: Ron King

DATE: 12/5/2019

SEAL

NORTH CAROLINA PROFESSIONAL SEAL 022959 ENGINEER RONALD W. KING

DOCUMENT NOT CONSIDERED FINAL UNLESS ALL SIGNATURES COMPLETED

CURB RAMP LOCATIONS (CENTER OF RAMP AT FACE OF CURB)
1 # -L- STA. 23+33.17, 82.69′ RT
TRIANGULAR ISLAND CUT THROUGH (CENTER OF PATHS AT FACE OF ISLAND)
2 # -L- STA. 23+49.74, 62.65′ RT -Y1- STA. 46+44.08, 58.76′ LT
OVERSIZED RAMP/PATH (8′ WIDTH MIN.)

FOR ALL CROSSWALKS, USE ROADWAY STANDARD DRAWING ON PMP-1B. ALL SPACING IS 6′ ON CENTER, UNLESS SHOWN DIFFERENTLY ON THIS SHEET.

MATCHLINE -L- STA. 22+00, SEE PMP-6

-L- DRYSDALE EXT.

-Y1-
US 17 MILITARY CUTOFF RD

-L- STA. +44.13
90.65′ RT

-L- STA. +59.29
77.61′ RT

-L- STA. +61.25
110.55′ RT

TRIANGULAR ISLAND WITH CUT THROUGH (SEE PMP-1A)

45+00

03-0752

REMOVE EXISTING RIGHT ARROW

DRYSDALE DR

MATCHLINE -Y1- STA. 48+80, SEE PMP-8

T2 STOPBAR LOCATIONS	
1	-L- STA. 23+69.44, 43.50′ RT to -L- STA. 23+68.61, 7.50′ LT
2	-Y1- STA. 46+23.94, 19.41′ LT to -Y1- STA. 46+23.98, 4.11′ LT
3	-Y1- STA. 47+72.91, 9.85′ LT to -Y1- STA. 47+72.94, 21.08′ LT

GRAPHIC SCALE
20 10 0 20 40
PLANS

PAVEMENT MARKING DETAIL

PLOT DRIVER: NCDOT_pdf_color_eng_50.plt PENTABLE: NCDOT_tcp.tbl
USER: CHARNDEN DATE: 12/4/2019 TIME: 5:38:31 PM
FILE: pw:\\PWAPPTPA01:SouthEast_Tampa\Documents\000166\CON009245\0000000024157\06.00_Project_Engineering_and_Design\U-5710A\Traffic\Pavement Markings\U5710A_PMP_PMP07.dgn

DocuSign Envelope ID: 6239EA99-43CF-4DDC-8215-3F82B08A047C

HDR Engineering, Inc. of the Carolinas
555 Fayetteville St, Suite 900 Raleigh, N.C. 27601
N.C.B.E.L.S. License Number: F-0116

TIP NO.	SHEET NO.
U-5710A	PMP-8

APPROVED: Ron King

DATE: 12/5/2019

SEAL

NORTH CAROLINA PROFESSIONAL SEAL 022959 ENGINEER RONALD W. KING

DOCUMENT NOT CONSIDERED FINAL UNLESS ALL SIGNATURES COMPLETED

-Y1-
US 17 MILITARY CUTOFF RD

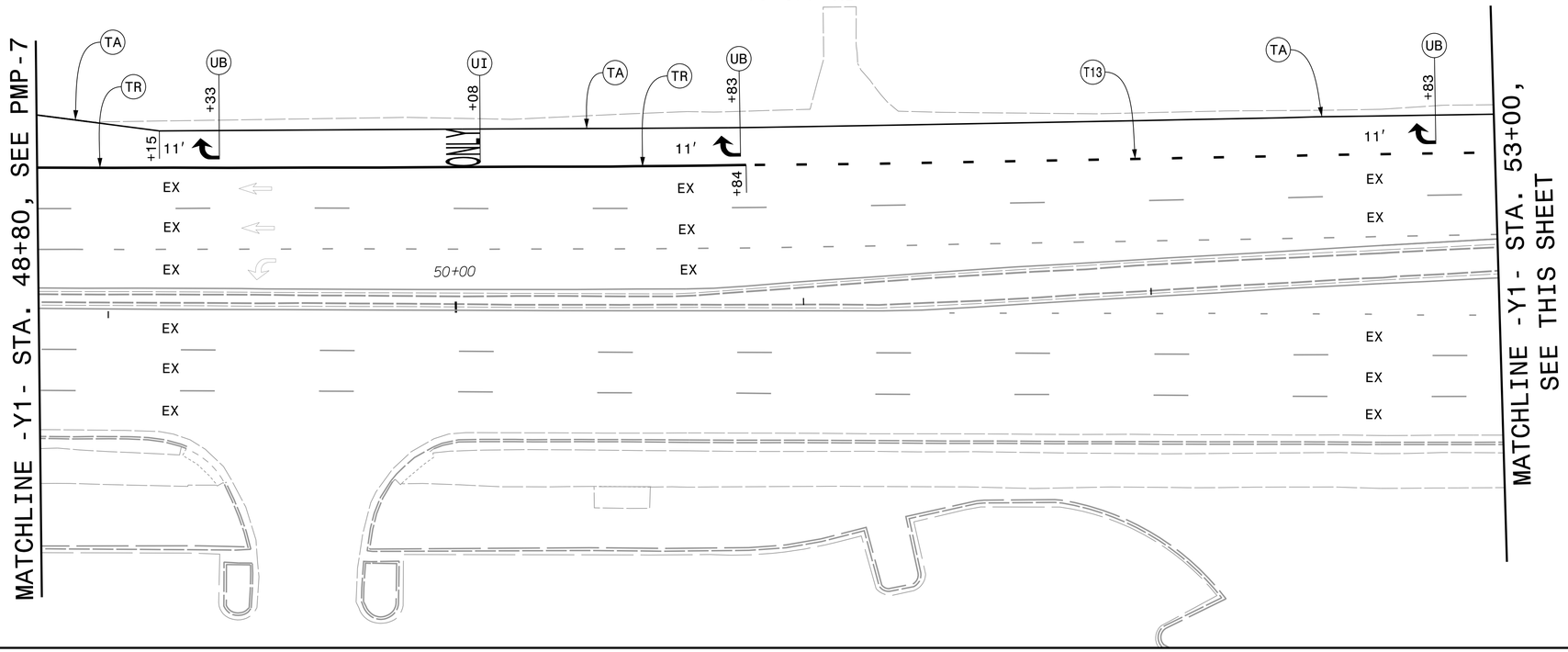

-Y1-
US 17 MILITARY CUTOFF RD

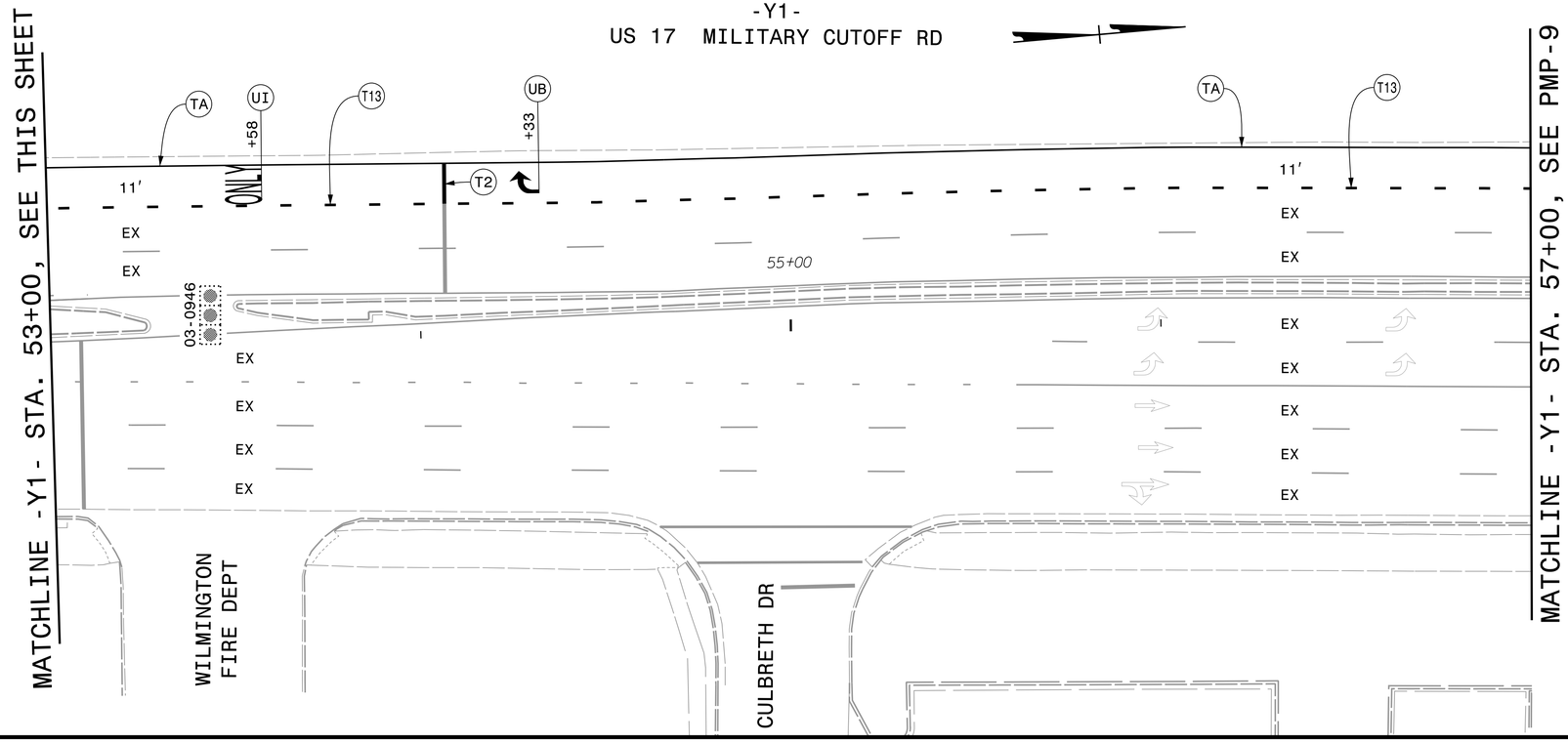

GRAPHIC SCALE
20 10 0 20 40
PLANS

PAVEMENT MARKING DETAIL

PLOT DRIVER: NCDOT_pdf_color_eng_50.plt PENTABLE: NCDOT_tcp.tbl
USER: CHARNDEN DATE: 12/4/2019 TIME: 5:38:39 PM
FILE: pw:\\PWAPPTPA01:SouthEast_Tampa\Documents\000166\CON0092456\V0000000024157\I\06.00_Project_Engineering_and_Design\U-5710A\Traffic\Pavement Markings\U5710A_PMP_PMP08.dgn

DocuSign Envelope ID: 6239EA99-43CF-4DDC-8215-3F82B08A047C

HDR Engineering, Inc. of the Carolinas
555 Fayetteville St, Suite 900 Raleigh, N.C. 27601
N.C.B.E.L.S. License Number: F-0116

TIP NO.	SHEET NO.
U-5710A	PMP-9

APPROVED: Ron King

DATE: 12/5/2019

SEAL

NORTH CAROLINA PROFESSIONAL SEAL 022959 ENGINEER RONALD W. KING

DOCUMENT NOT CONSIDERED FINAL UNLESS ALL SIGNATURES COMPLETED

-Y4- STA. 32+96 +/-
TIE TO EXISTING

PARKER FARM RD

TA

T13

TA

R 50'

11'

+60

EX

EX

MATCHLINE -Y1- STA. 57+00, SEE PMP-8

EX

EX

EX

EX

EX

03-0895

-Y1-
US 17 MILITARY CUTOFF RD

REMOVE EXISTING RIGHT ARROW

UE

+00

60+00

REMOVE EXISTING CHARACTERS

ONLY

UE
UC
UC

+50

REMOVE EXISTING RIGHT ARROW

EX

EX

EX

EX

EX

EX

EX

EX

EX

EX

EX

EX

EX

EX

GRAPHIC SCALE
20 10 0 20 40
PLANS

PAVEMENT MARKING DETAIL

PLOT DRIVER: NCDOT_pdf_color_eng_50.plt PENTABLE: NCDOT_tcp.tbl
USER: CHARNDEN DATE: 12/4/2019 TIME: 5:38:47 PM
FILE: pw:\\PWAPPTPA01:SouthEast_Tampa\Documents\000166\CON00924S6\00000000024157\06.00_Project_Engineering_and_Design\U-5710A\Traffic\Pavement Markings\U5710A_PMP_PMP09.dgn

TIP PROJECT: U-5710A

CONTRACT: DC00277

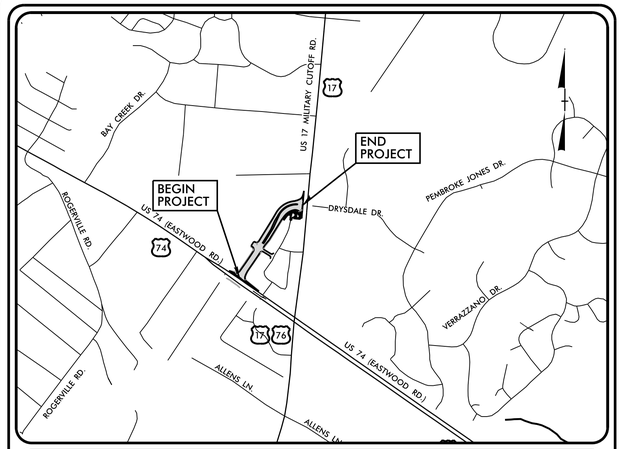

VICINITY MAP

NOT TO SCALE

STATE OF NORTH CAROLINA
DIVISION OF HIGHWAYS

PLAN FOR PROPOSED
HIGHWAY EROSION CONTROL
NEW HANOVER COUNTY

LOCATION: NEW LOCATION NORTHWESTERN QUADRANT CONNECTION BETWEEN US 74 (EASTWOOD RD.) AND US 17 (MILITARY CUTOFF RD.)

TYPE OF WORK: GRADING, PAVING, DRAINAGE AND SIGNALS

STATE	STATE PROJECT REFERENCE NO.	SHEET NO.	TOTAL SHEETS
N.C.	U-5710A	EC-1	

STATE PROJ. NO.	F. A. PROJ. NO.	DESCRIPTION
50115.1.2	N/A	P.E.
50115.2.2	N/A	ROW & UTIL.
50115.3.2	0074228	CONSTR.

EROSION AND SEDIMENT CONTROL MEASURES

Std. #	Description	Symbol
1630.03	Temporary Silt Ditch	TSD
1630.05	Temporary Diversion	TD
1605.01	Temporary Silt Fence	
1606.01	Special Sediment Control Fence	
1622.01	Temporary Berms and Slope Drains	
1630.02	Silt Basin Type B	
1633.01	Temporary Rock Silt Check Type-A	
	Temporary Rock Silt Check Type-A with Matting and Polyacrylamide (PAM)	
1633.02	Temporary Rock Silt Check Type-B	
	Wattle / Coir Fiber Wattle	EW CFW
	Wattle / Coir Fiber Wattle with Polyacrylamide (PAM)	
1634.01	Temporary Rock Sediment Dam Type-A	
1634.02	Temporary Rock Sediment Dam Type-B	
1635.01	Rock Pipe Inlet Sediment Trap Type-A	
1635.02	Rock Pipe Inlet Sediment Trap Type-B	
1630.04	Stilling Basin	
1630.06	Special Stilling Basin	
	Rock Inlet Sediment Trap:	
1632.01	Type A	A
1632.02	Type B	B
1632.03	Type C	C
	Skimmer Basin	
	Tiered Skimmer Basin	
	Infiltration Basin	

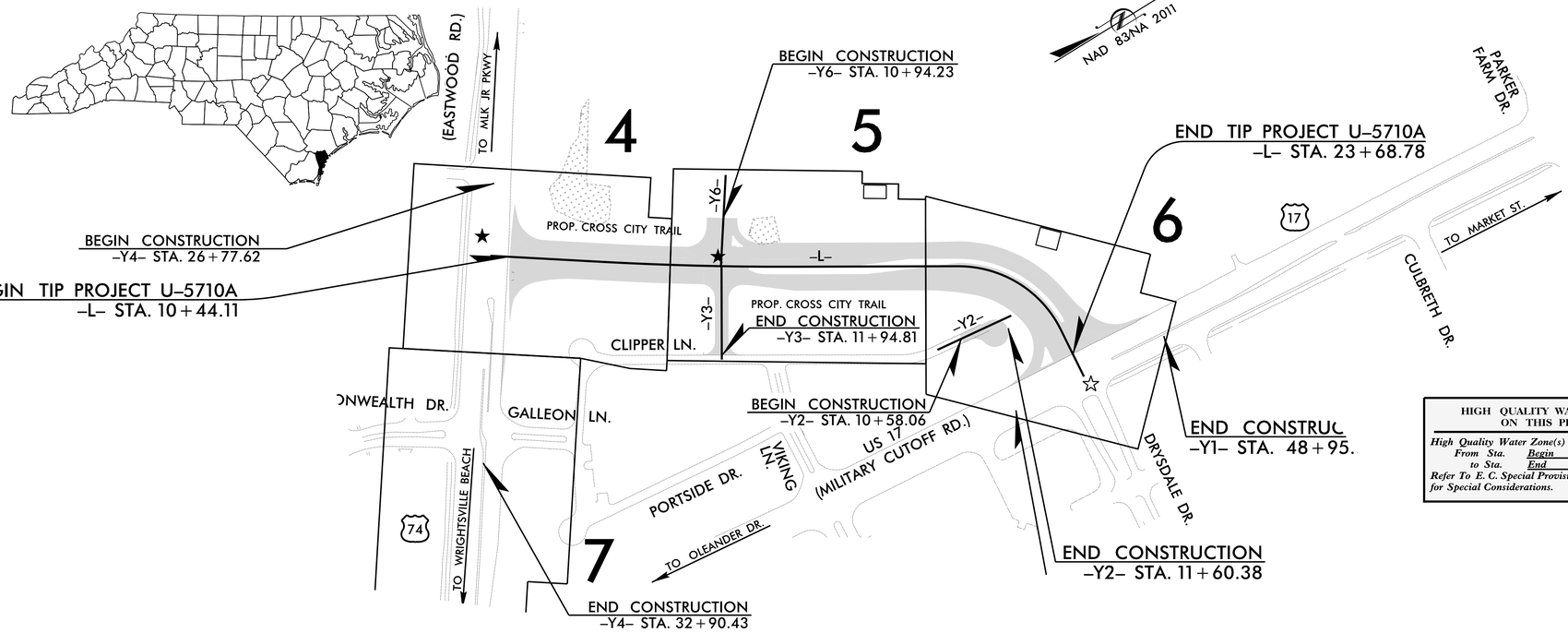

THIS PROJECT CONTAINS EROSION CONTROL PLANS FOR CLEARING AND GRUBBING PHASE OF CONSTRUCTION.

HIGH QUALITY WATER(S) EXIST ON THIS PROJECT

High Quality Water Zone(s) Exist
From Sta. Begin
to Sta. End
Refer To E. C. Special Provisions for Special Considerations.

THIS PROJECT HAS BEEN DESIGNED TO SENSITIVE WATERSHED STANDARDS.

ENVIRONMENTALLY SENSITIVE AREA(S) EXIST ON THIS PROJECT

Refer To E. C. Special Provisions for Special Considerations.

GRAPHIC SCALE

50 25 0 50 100

PLANS

THESE EROSION AND SEDIMENT CONTROL PLANS COMPLY WITH THE APPLICABLE REGULATIONS SET FORTH BY THE NCG-010000 GENERAL CONSTRUCTION PERMIT EFFECTIVE APRIL 1, 2019 AND ISSUED BY THE NORTH CAROLINA DEPARTMENT OF ENVIRONMENTAL QUALITY DIVISION OF WATER RESOURCES.

Prepared in the Office of:

HDR Engineering, Inc. of the Carolinas
555 Fayetteville St, Suite 900 Raleigh, N.C. 27601
N.C.B.E.L.S. License Number: F-0116

Designed by:

Wyatt D. Yelverton PE, CPESC 3609

NAME *LEVEL III CERTIFICATION NO.*

Roadway Standard Drawings

The following roadway english standards as appear in "Roadway Standard Drawings"– Roadway Design Unit – N. C. Department of Transportation – Raleigh, N. C., dated January 2018 and the latest revison thereto are applicable to this project and by reference hereby are considered a part of these plans.

1604.01	Railroad Erosion Control Detail	1632.01	Rock Inlet Sediment Trap Type A
1605.01	Temporary Silt Fence	1632.02	Rock Inlet Sediment Trap Type B
1606.01	Special Sediment Control Fence	1632.03	Rock Inlet Sediment Trap Type C
1607.01	Gravel Construction Entrance	1633.01	Temporary Rock Silt Check Type A
1622.01	Temporary Berms and Slope Drains	1633.02	Temporary Rock Silt Check Type B
1630.01	Riser Basin	1634.01	Temporary Rock Sediment Dam Type A
1630.02	Silt Basin Type B	1634.02	Temporary Rock Sediment Dam Type B
1630.03	Temporary Silt Ditch	1635.01	Rock Pipe Inlet Sediment Trap Type A
1630.04	Stilling Basin	1635.02	Rock Pipe Inlet Sediment Trap Type B
1630.05	Temporary Diversion	1640.01	Coir Fiber Baffle
1630.06	Special Stilling Basin	1645.01	Temporary Stream Crossing
1631.01	Matting Installation		

12/5/2019
11:28:52 AM
U-5710A_EC_TSH_HDR.dgn

TEMPORARY ROCK SILT CHECK TYPE 'A' WITH EXCELSIOR MATTING AND POLYACRYLAMIDE (PAM)

PROJECT REFERENCE NO.	SHEET NO.
U-5710A	EC-2
R/W SHEET NO.	
ROADWAY DESIGN ENGINEER	HYDRAULICS ENGINEER

HDR Engineering, Inc. of the Carolinas
555 Fayetteville St, Suite 900 Raleigh, N.C. 27601
N.C.B.E.L.S. License Number: F-0116

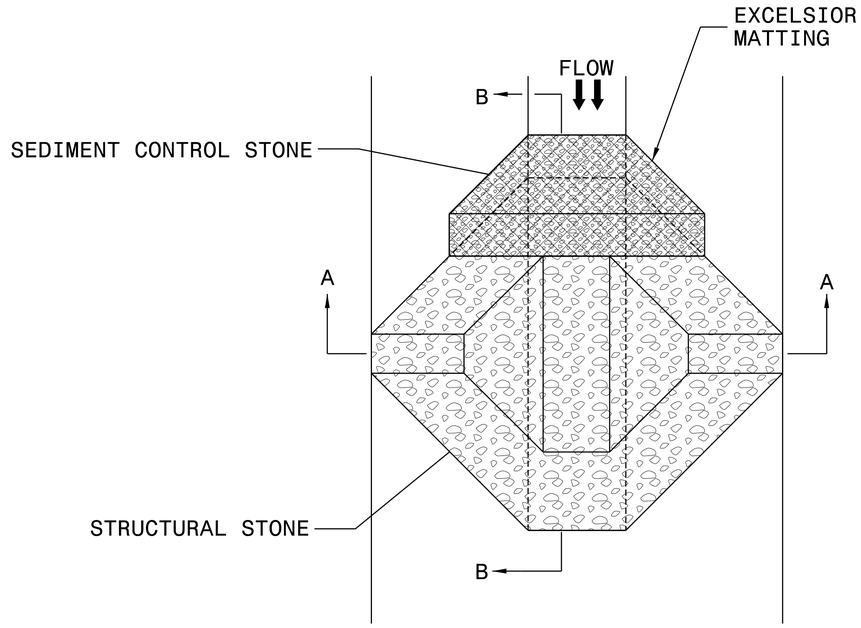

PLAN

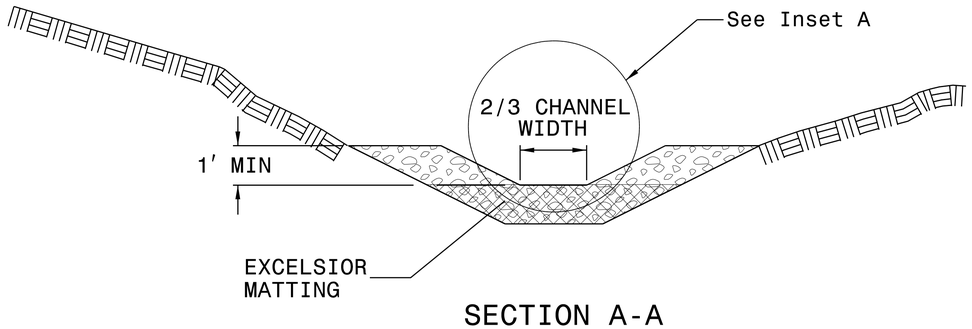

SECTION A-A

NOTES:

INSTALL TEMPORARY ROCK SILT CHECK TYPE A IN ACCORDANCE WITH ROADWAY STANDARD DRAWING NO. 1633.01.

USE EXCELSIOR FOR MATTING MATERIAL AND ANCHOR MATTING SECTION AT TOP AND BOTTOM WITH CLASS B STONE.

PRIOR TO POLYACRYLAMIDE (PAM) APPLICATION, OBTAIN A SOIL SAMPLE FROM PROJECT LOCATION, AND FROM OFFSITE MATERIAL, AND ANALYZE FOR APPROPRIATE PAM FLOCCULANT TO BE APPLIED TO EACH ROCK SILT CHECK.

INITIALLY APPLY 4 OUNCES OF POLYACRYLAMIDE (PAM) TO TOP OF MATTING SECTION AND AFTER EVERY RAINFALL EVENT THAT EQUALS OR EXCEEDS 0.50 INCHES.

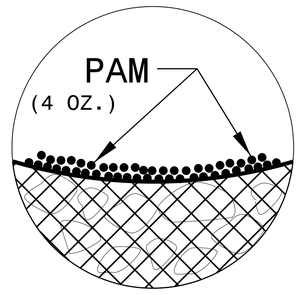

INSET A

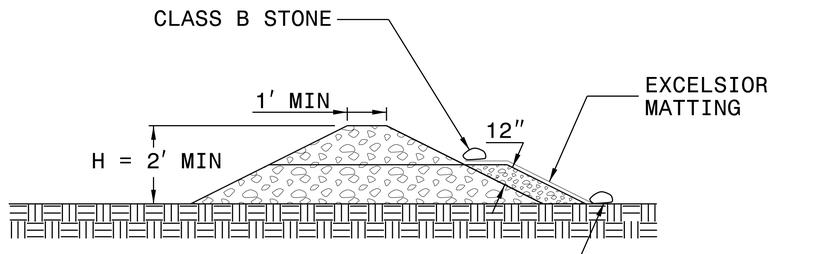

SECTION B-B

NOT TO SCALE

PROJECT REFERENCE NO.	SHEET NO.
U-5710A	EC-2A
R/W SHEET NO.	
ROADWAY DESIGN ENGINEER	HYDRAULICS ENGINEER

SILT FENCE COIR FIBER WATTLE BREAK DETAIL

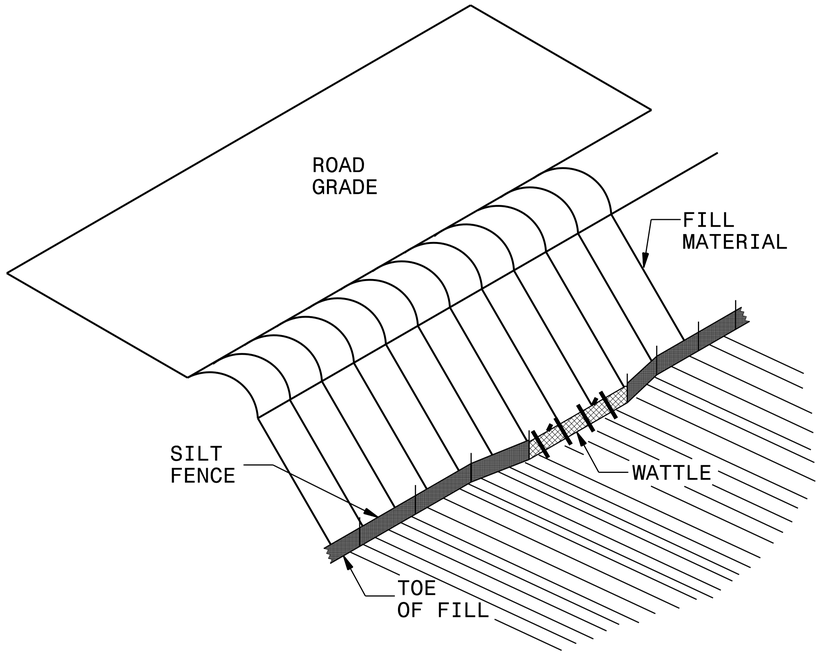

ISOMETRIC VIEW

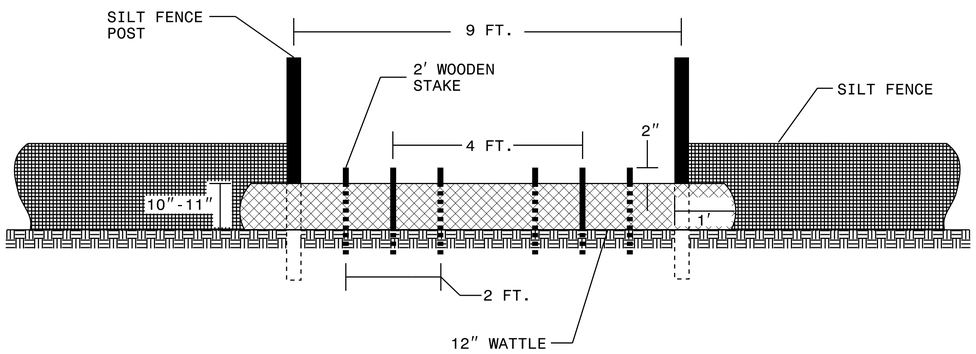

VIEW FROM SLOPE

NOTES:

USE MINIMUM 12 IN. DIAMETER COIR FIBER (COCONUT FIBER) WATTLE AND LENGTH OF 10 FT.

EXCAVATE A 1 TO 2 INCH TRENCH FOR WATTLE TO BE PLACED.

DO NOT PLACE WATTLE ON TOE OF SLOPE.

USE 2 FT. WOODEN STAKES WITH A 2 IN. BY 2 IN. NOMINAL CROSS SECTION.

INSTALL A MINIMUM OF 2 UPSLOPE STAKES AND 4 DOWNSLOPE STAKES AT AN ANGLE TO WEDGE WATTLE TO GROUND.

PROVIDE STAPLES MADE OF 0.125 IN. DIAMETER STEEL WIRE FORMED INTO A U SHAPE NOT LESS THAN 12″ IN LENGTH.

INSTALL STAPLES APPROXIMATELY EVERY 1 LINEAR FOOT ON BOTH SIDES OF WATTLE AND AT EACH END TO SECURE IT TO THE SOIL.

WATTLE INSTALLATION CAN BE ON OUTSIDE OF THE SILT FENCE AS DIRECTED.

INSTALL TEMPORARY SILT FENCE IN ACCORDANCE WITH SECTION 1605 OF THE STANDARD SPECIFICATIONS.

INSET A

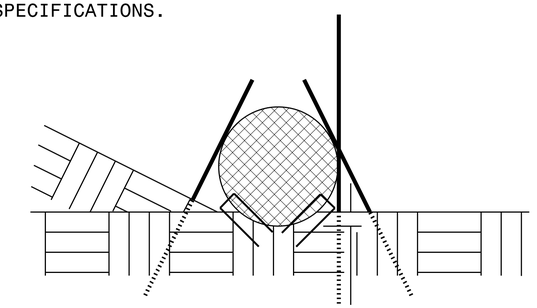

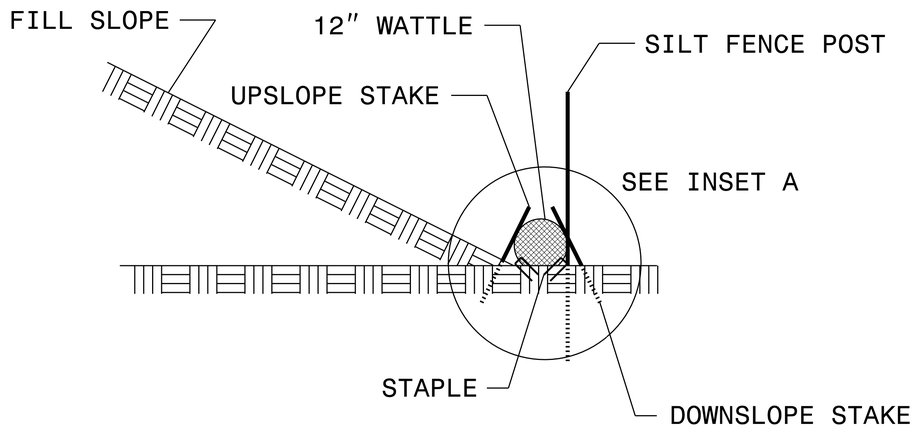

SIDE VIEW

PROJECT REFERENCE NO.	SHEET NO.
U-5710A	EC-2B
R/W SHEET NO.	
ROADWAY DESIGN ENGINEER	HYDRAULICS ENGINEER

HDR Engineering, Inc. of the Carolinas
555 Fayetteville St, Suite 900 Raleigh, N.C. 27601
N.C.B.E.L.S. License Number: F-0116

PUMP–AROUND OPERATION

NOTES:
1) All excavation shall be performed in only dry or isolated areas of the work zone.
2) Impervious dikes are to be used to isolate work from stream flow when necessary.
3) Maintenance of stream flow operations shall be incidental to the work. This includes polyethylene sheeting, diversion pipes, pumps and hoses.
4) Pumps and hoses shall be of sufficient size to dewater the work area.

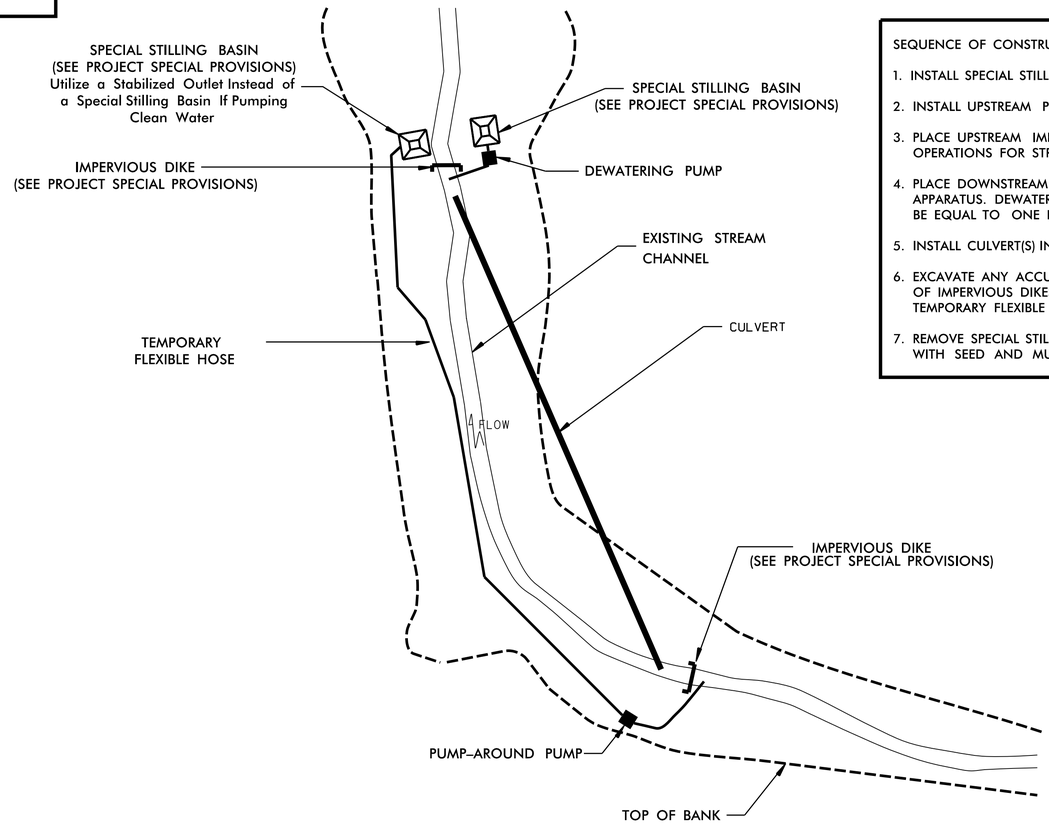

SEQUENCE OF CONSTRUCTION FOR TYPICAL WORK AREA

1. INSTALL SPECIAL STILLING BASIN(S).
2. INSTALL UPSTREAM PUMP AND TEMPORARY FLEXIBLE HOSE.
3. PLACE UPSTREAM IMPERVIOUS DIKE AND BEGIN PUMPING OPERATIONS FOR STREAM DIVERSION.
4. PLACE DOWNSTREAM IMPERVIOUS DIKE AND PUMPING APPARATUS. DEWATER ENTRAPPED AREA. AREA TO BE DEWATERED SHALL BE EQUAL TO ONE DAY'S WORK.
5. INSTALL CULVERT(S) IN ACCORDANCE WITH THE PLANS.
6. EXCAVATE ANY ACCUMULATED SILT AND DEWATER BEFORE REMOVAL OF IMPERVIOUS DIKES. REMOVE IMPERVIOUS DIKES, PUMPS, AND TEMPORARY FLEXIBLE HOSE. (DOWNSTREAM IMPERVIOUS DIKES FIRST).
7. REMOVE SPECIAL STILLING BASIN(S) AND BACKFILL. STABILIZE DISTURBED AREA WITH SEED AND MULCH.

PLOT DRIVER: NCDOT_pdf_color_eng_50.plt PENTABLE: NCDOT_TSH.tbl
USER: JHEATON DATE: 10/8/2019 TIME: 3:48:28 PM
FILE: North_Carolina_Dept_of_Transportation\2014.16_Planning _Design_LSA\U-5710_T0.4_c\06.00_Project_Engineering_and_Design\U-5710A_EC_DETAILS.dgn

HDR Engineering, Inc. of the Carolinas
555 Fayetteville St, Suite 900 Raleigh, N.C. 27601
N.C.B.E.L.S. License Number: F-0116

PROJECT REFERENCE NO.	SHEET NO.
U-5710A	EC-3

ROADWAY DESIGN ENGINEER	HYDRAULICS ENGINEER

DIVISION OF HIGHWAYS
STATE OF NORTH CAROLINA

SOIL STABILIZATION SUMMARY SHEET

MATTING IN DITCHES

CONST SHEET NO.	LINE	FROM STATION	TO STATION	SIDE	ESTIMATE (SY)
5	-L-	19+42	20+00	LT.	165

MATTING ON SLOPES

CONST SHEET NO.	LINE	FROM STATION	TO STATION	SIDE	ESTIMATE (SY)
5-6	-L-	19+50	21+50	LT.	394
5-6	-L-	16+00	23+00	RT.	776
			TOTAL		1170 SY
			TOTAL FOR DITCHES		165 SY
			TOTAL FOR SLOPES		1170 SY
			MISC. MATTING TO BE INSTALLED AS DIRECTED BY ENGINEER		1265 SY
			OVERALL TOTAL		2600 SY
			SAY		2600 SY

PLOT DRIVER: NCDOT_pdf_color_eng_50.plt PENTABLE: NCDOT_TSH.tbl
USER: SEAMURPHY DATE: 10/30/2019 TIME: 3:26:45 PM SCALE: 1:398.182
FILE: North_Carolina_Dept_of_Transportation\2014.16_Planning _Design_LSAU_5710_T0_4_c\06.00_Project_Engineering_and_Design\U-5710A\Erosion_Control\U-5710A_EC_MATTING.dgn

HDR Engineering, Inc. of the Carolinas
555 Fayetteville St, Suite 900 Raleigh, N.C. 27601
N.C.B.E.L.S. License Number: F-0116

PROJECT REFERENCE NO.	SHEET NO.
U-5710A	EC-3A

ROADWAY DESIGN ENGINEER	HYDRAULICS ENGINEER

DIVISION OF HIGHWAYS
STATE OF NORTH CAROLINA

SOIL STABILIZATION TIMEFRAMES

SITE DESCRIPTION	STABILIZATION TIME	TIMEFRAME EXCEPTIONS
PERIMETER DIKES, SWALES, DITCHES AND SLOPES	7 DAYS	NONE
HIGH QUALITY WATER (HQW) ZONES	7 DAYS	NONE
SLOPES STEEPER THAN 3:1	7 DAYS	IF SLOPES ARE 10' OR LESS IN LENGTH AND ARE NOT STEEPER THAN 2:1, 14 DAYS ARE ALLOWED.
SLOPES 3:1 OR FLATTER	14 DAYS	7 DAYS FOR SLOPES GREATER THAN 50' IN LENGTH.
ALL OTHER AREAS WITH SLOPES FLATTER THAN 4:1	14 DAYS	NONE, EXCEPT FOR PERIMETERS AND HQW ZONES.

PLOT DRIVER: NCDOT_pdf_color_eng_50.plt PENTABLE: NCDOT_TSH.tbl
USER: JHEATON DATE: 10/8/2019 TIME: 4:01:37 PM SCALE: 1:398.182
FILE: North_Carolina_Dept_of_Transportation\2014.16_Planning_Design\SAU_5710_TO_4_c\06.00_Project_Engineering_and_Design\U-5710A\Erosion_Control\U-5710A_EC_MATTING.dgn

PROJECT REFERENCE NO.	SHEET NO.
U-5710A	EC-4/Const. 4
R/W SHEET NO.	
ROADWAY DESIGN ENGINEER	HYDRAULICS ENGINEER

HDR Engineering, Inc. of the Carolinas
555 Fayetteville St, Suite 900 Raleigh, N.C. 27601
N.C.B.E.L.S. License Number: F-0116

NOTE:
USE FABRIC INSERT INLET PROTECTION DEVICE AS DIRECTED IN LIEU OF ROCK INLET SEDIMENT TRAP TYPE C TO AVOID IMPOUNDING RUNOFF ON ROADWAYS OPEN TO THE PUBLIC

NAD 83/NA 2011

-L- PC Sta. 12+38.92

-L- POT Sta. 10+04.90 =
-Y4- POT Sta. 28+36.54

MATCHLINE -L- STA. 14+00, SEE SHEET 5

MATCHLINE -Y4- STA. 30+50, SEE SHEET 7

CLEARING AND GRUBBING
EROSION CONTROL FOR
CONSTRUCTION SHEET 4

NOTE:
PLACE TEMPORARY ROCK SEDIMENT DAMS TYPE – B AND TEMPORARY ROCK SILT CHECKS TYPE – A AT DRAINAGE OUTLETS.

NOTE:
UTILIZE COIR FIBER MATTING ADJACENT TO WETLANDS/JURISDICTIONAL AREAS, AND AS DIRECTED.

NOTE:
THE OUTSIDE BUFFER, WETLAND OR WATER BOUNDARY SHALL BE CLEARLY MARKED BY HIGHLY VISIBLE FENCING (ORANGE SAFETY FENCE).

★ PROPOSED SIGNAL
SEE SHEET 8 FOR -L- PROFILE

REVISIONS

ROW REV. – JUNE 19, 2019 – ADDITION OF PARCEL 16 (ROW AND TCE), ADDITION OF PARCEL 17 (PUE AND TCE), ADDITION OF PARCEL 18 (PUE). ADDED PUE AND TCE TO PARCEL 1. CEH.
ROW REV. – AUGUST 16, 2019 – REMOVED TEMPORARY CONSTRUCTION EASEMENT (TCE) FROM PARCELS 16 & 17. TCE REDUCED ON PARCEL 1. ADDED PARCEL 15A FOR EASTPORT HOA. CEH.

PLOT DRIVER: NCDOT_pdf_color_eng_50.plt PENTABLE: NCDOT_EC_C&G_BW.DRW.tbl
USER: DWAGNER DATE: 11/26/2019 TIME: 4:11:32 PM
FILE: North_Carolina_Dept_of_Transportation\2014_16_Planning_Design_LSA\U_5710_TO_4_c\06_00_Project_Engineering_and_Design\U-5710A\Erosion Control\U5710A_EC_PSH.dgn

PROJECT REFERENCE NO.	SHEET NO.
U-5710A	EC-5/Const. 5
R/W SHEET NO.	
ROADWAY DESIGN ENGINEER	HYDRAULICS ENGINEER

HDR Engineering, Inc. of the Carolinas
555 Fayetteville St, Suite 900 Raleigh, N.C. 27601
N.C.B.E.L.S. License Number: F-0116

DETAIL A
4' BASE TAIL DITCH
(Not to Scale)

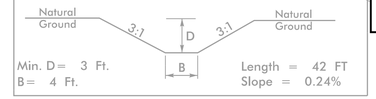

Min. D = 3 Ft.
B = 4 Ft.
Length = 42 FT
Slope = 0.24%

FROM STA. 19+42 TO STA. 20+00 -L- LT
EST. DDE = 110 CY

4
15

ENVIRONMENTALLY SENSITIVE AREA
SEE PROJECT SPECIAL PROVISIONS

-Y6- POT Sta. 10+00.00

-L- POC Sta. 15+12.47 =
-Y3- POT Sta. 10+00.00

-L- PT Sta. 16+70.71

-L- POC Sta.15+11.15 =
-Y6- POT Sta. 12+00.00

-Y3- POT Sta. 12+04.82

MATCHLINE -L- STA. 14+00, SEE SHEET 4

MATCHLINE -L- STA. 19+60, SEE SHEET 6

DITCH 'A'
CLASS 'B' RIP RAP
EST. 8 TONS
21 SY GEO-TEXTILE

NOTE:
UTILIZE COIR FIBER MATTING ADJACENT TO WETLANDS/JURISDICTIONAL AREAS, AND AS DIRECTED.

NOTE:
THE OUTSIDE BUFFER, WETLAND OR WATER BOUNDARY SHALL BE CLEARLY MARKED BY HIGHLY VISIBLE FENCING (ORANGE SAFETY FENCE).

CLEARING AND GRUBBING
EROSION CONTROL FOR
CONSTRUCTION SHEET 5

NOTE:
PLACE TEMPORARY ROCK SEDIMENT DAMS TYPE – B AND TEMPORARY ROCK SILT CHECKS TYPE – A AT DRAINAGE OUTLETS.

★ PROPOSED SIGNAL
SEE SHEET 5A FOR DRAINAGE DITCH DETAIL
SEE SHEET 8 FOR -L- PROFILE
SEE SHEET 10 FOR -Y3- PROFILE

REVISIONS

ROW REV. – JUNE 19, 2019 – ADDED TCE TO PARCELS 1 & 2. ADDITIONAL PDE AND TWEAKED ROW ON PARCEL 2. REDUCED TCE ON PARCELS 6, 7, 8 AND 9. CEH.
ROW REV. – AUGUST 16, 2019 – PARCEL 2 RE-NUMBERED TO PARCEL 1. ADDED RIGHT OF WAY AND TCE AROUND CENTERPOINT STUBOUT ON PARCEL 1. REMOVED TCE ON PARCELS 3 & 5 ELIMINATING CLAIMS. PARCEL 15A ADDED FOR EASTPORT HOA. CEH.

PLOT DRIVER: NCDOT_pdf_color_eng_50.plt
USER: DWAGNER
FILE: North_Carolina_Dept_of_Transportation\2014_16_Planning _Design_LSA\U_5710_TO_4_c\06.00_Project_Engineering_and_Design\U-5710A\Erosion Control\U5710A_EC_PSH.dgn
PENTABLE: NCDOT_EC_C&G BW_DRW.tbl
DATE: 11/26/2019
TIME: 4:11:35 PM

PROJECT REFERENCE NO.	SHEET NO.
U-5710A	EC-6/Const. 6
R/W SHEET NO.	
ROADWAY DESIGN ENGINEER	HYDRAULICS ENGINEER

HDR Engineering, Inc. of the Carolinas
555 Fayetteville St, Suite 900 Raleigh, N.C. 27601
N.C.B.E.L.S. License Number: F-0116

CLEARING AND GRUBBING EROSION CONTROL FOR CONSTRUCTION SHEET 6

ENVIRONMENTALLY SENSITIVE AREA
SEE PROJECT SPECIAL PROVISIONS

NOTE:
USE FABRIC INSERT INLET PROTECTION DEVICE AS DIRECTED IN LIEU OF ROCK INLET SEDIMENT TRAP TYPE C TO AVOID IMPOUNDING RUNOFF ON ROADWAYS OPEN TO THE PUBLIC

NOTE:
PLACE TEMPORARY ROCK SEDIMENT DAMS TYPE – B AND TEMPORARY ROCK SILT CHECKS TYPE – A AT DRAINAGE OUTLETS.

NOTE:
UTILIZE COIR FIBER MATTING ADJACENT TO WETLANDS/JURISDICTIONAL AREAS, AND AS DIRECTED.

NOTE:
THE OUTSIDE BUFFER, WETLAND OR WATER BOUNDARY SHALL BE CLEARLY MARKED BY HIGHLY VISIBLE FENCING (ORANGE SAFETY FENCE).

SEE SHEET 10 FOR -Y2- PROFILE

DETAIL B
CHANNEL IMPROVEMENTS
(Not to Scale)

Natural Ground — 3:1 — D — 3:1 — Natural Ground
Min. D = 3 Ft.
B = 5 Ft.
Length = 80 FT
Slope = 0.3%

FROM STA. 22+81 TO STA. 23+24 -L- LT
EST. DDE = 170 CY

13	THOMAS HERGA DB 5654 PG 0358 MB 32 PG 295
14	ETHEL L. REYNOLDS DB 4902 PG 0969 MB 32 PG 295
15	EASTPORT HOA INC DB 2288 PG 544 MB 32 PG 295

CHANNEL RELOCATION SEE DETAIL 'C'

-L- PC Sta. 20+31.43

MATCHLINE -L- STA. 19+60, SEE SHEET 5

CHANNEL IMPROVEMENTS SEE DETAIL 'B'

NAD 83/NA 2011

-L- PT Sta. 23+10.34

-Y2- POT Sta. 11+78.23

-Y2- POT Sta. 10+00.00

2020 ADT
2040 ADT
(ADT IN 100's)

DRYSDALE DR. EXT. — US 17 MILITARY CUTOFF RD.

71/72	33/34	528/723
33/33	54/69	
528/722	54/72	112/142

US 17 MILITARY CUTOFF RD. — DRYSDALE DR.

REVISIONS

ROW REV. – MAY 28, 2019 – PUE ADDED TO PARCEL 12. CEH
ROW REV. – JUNE 19, 2019 – REVISED PDE AND ADDED TCE TO PARCEL 2. REVISED TCE TO STAY OFF OF HOUSE ON PARCEL 10. CEH.
ROW REV. – AUGUST 16, 2019 – PARCEL 2 RE-NUMBERD TO PARCEL 1. ROW ADDED TO PARCEL 11. ROW ADJUSTED AND REDUCED ON PARCELS 12 & 13.
PUE ON PARCEL 12 CHANGED TO DUE AND MODIFIED. PDE ADDED TO PARCELS 12 & 13. CEH.

PLOT DRIVER: NCDOT_pdf_color-eng_50.plt PENTABLE: NCDOT_EC_C&G BW.DRW.tbl
USER: DWAGNER DATE: 11/26/2019 TIME: 4:11:38 PM
FILE: North_Carolina_Dept_of_Transportation\2014_16_Planning _Design_LSA\U_5710_TO_4_cv06.00_Project_Engineering.and_Design\U-5710A\Erosion Control\U5710A_EC_PSH.dgn

PROJECT REFERENCE NO.	SHEET NO.
U-5710A	EC-6/CONST.6A
R/W SHEET NO.	
ROADWAY DESIGN ENGINEER	HYDRAULICS ENGINEER

60" RCP CONSTRUCTION SEQUENCE STA. 20+00 –L– LT

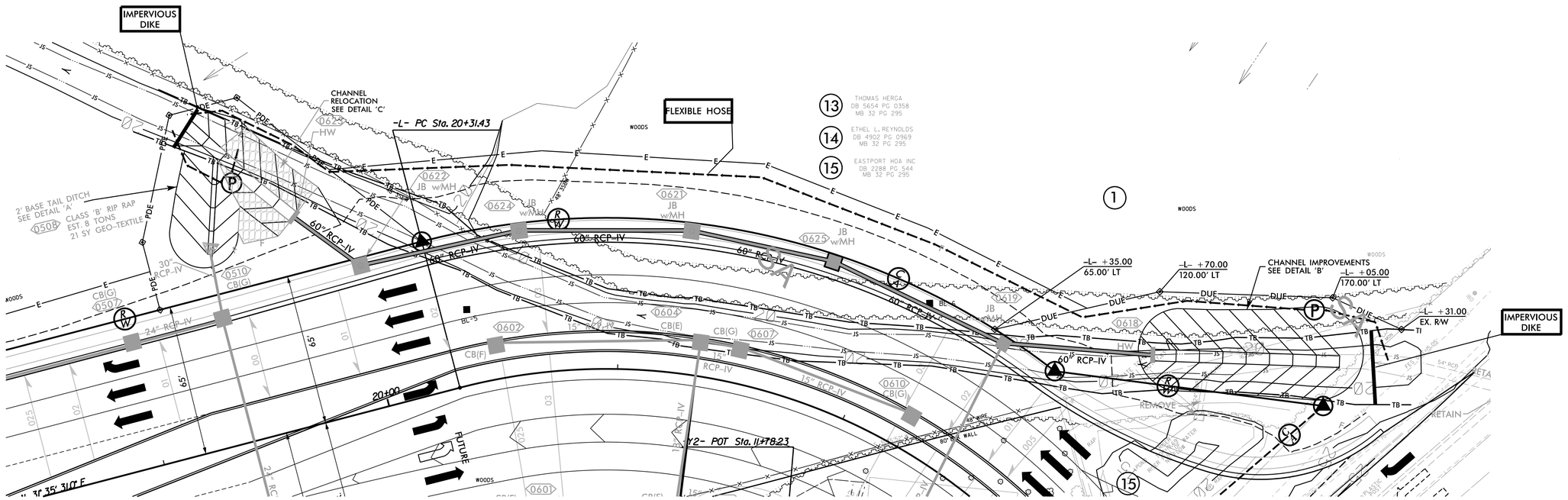

1. INSTALL IMPERVIOUS DIKES AT EXISTING 54" CULVERT OUTLET AND DOWNSTREAM OF WORK ZONE.
2. PROVIDE PUMP AND SPECIAL STILLING BASIN FOR DEWATERING OF THE WORK ZONE. USE FILTER FABRIC OR OTHER APPROPRIATE MEASURES TO PROTECT STREAM BANKS AROUND SPECIAL STILLING BASIN.
3. UTILIZING PUMP AROUND OPERATION AND FLEXIBLE HOSE, CONSTRUCT 60" PIPES AND CHANNEL IMPROVEMENTS DOWNSTREAM AND UPSTREAM.
4. REMOVE IMPERVIOUS DIKES AND ALLOW STREAM TO FLOW INTO NEWLY CONSTRUCTED PIPES.
5. COMPLETE THE ROADWAY CONSTRUCTION.

PROJECT REFERENCE NO.	SHEET NO.
U-5710A	EC-7/Const. 7
R/W SHEET NO.	
ROADWAY DESIGN ENGINEER	HYDRAULICS ENGINEER

HDR Engineering, Inc. of the Carolinas
555 Fayetteville St, Suite 900 Raleigh, N.C. 27601
N.C.B.E.L.S. License Number: F-0116

CLEARING AND GRUBBING
EROSION CONTROL FOR
CONSTRUCTION SHEET 7

NOTE:
PLACE TEMPORARY ROCK SEDIMENT DAMS TYPE – B AND TEMPORARY ROCK SILT CHECKS TYPE – A AT DRAINAGE OUTLETS.

NOTE:
UTILIZE COIR FIBER MATTING ADJACENT TO WETLANDS/JURISDICTIONAL AREAS, AND AS DIRECTED.

NOTE:
THE OUTSIDE BUFFER, WETLAND OR WATER BOUNDARY SHALL BE CLEARLY MARKED BY HIGHLY VISIBLE FENCING (ORANGE SAFETY FENCE).

NAD 83/NA 2

MATCHLINE –Y4– STA. 30+50, SEE SHEET 4

FUTURE PDE

FUTURE ROW

RETAIN

CB(F)

TB JB w/MH

0702

0701

36" RCP

CB TOP=24.27' OUT=18.25'

56" CONC

30" C&G

CB TOP=25.58' INV=18.30' OUT=18.16'

US 74 EASTWOOD RD VAR BST

CONC ISL

35+00

–Y4–

EASTWOOD ROAD US 74 60' BST

US 74 CROSS CITY TRAIL VAR BST

PLASTIC BOLLARD

CONC

10" PVC

10' X 70' SIGHT EASEMENT

EIP 0.22' IN R/W

EIP 0.33' IN R/W

EIP 0.36' IN R/W

SSMH TOP=24.76' (NE) IN=15.22' (SE) IN=15.06' OUT=15.07'

SSMH TOP=24.98' (SW) IN=15.53' OUT=15.50'

WOODS

30" BLK WALL

30" RCP PIPE DIRECTION

24" C&G

CB TOP=21.72' IN=17.62' OUT=17.52'

42" RCP

DMH 36" IN=16.59' (SW) 36" IN=16.52' (SE) 36" OUT=16.43'

CB TOP=24.16' IN=17.06' OUT=16.86'

36" RCP

30" C&G

EXISTING R/W

ICY BST

18" RCP

RIP RAP

CB TOP=23.24' OUT=20.64'

15" RCP

CB TOP=24.56' IN=20.49' IN=20.43' OUT=20.40'

20' DRAINAGE & UTILITY EASEMENT

24" RCP

CB TOP=24.35' IN=20.23' IN=20.15' OUT=20.05'

INV=20.02'

78" CONC

BST

COMMONWEALTH DR VAR BST

6" HDPE DIRECTION

6" PVC INV=19.21' OUT=18.03'

CB TOP=22.80'

PLOT DRIVER: NCDOT_pdf_color_eng_50.plt PENTABLE: NCDOT_EC_C&G BW.DRW.tbl
USER: DWAGNER DATE: 11/26/2019 TIME: 4:11:41 PM
FILE: North_Carolina_Dept_of_Transportation\2014_16_Planning _Design_LSAU_5710_TO_4_cV06_00_Project_Engineering_and_Design\U-5710A\Erosion Control\U5710A_EC_PSht.dgn

REVISIONS

ROW REV. – JUNE 19, 2019 – ADDITION OF PARCEL 18 (PUE AND DUE). ADDITION OF PARCEL 19 (ROW, DUE AND TCE). ADDITION OF PARCEL 20 (ROW, PUE AND TCE). CEH.
ROW REV. – AUGUST 16, 2019 – REMOVED TEMPORARY CONSTRUCTION EASEMENT (TCE) FROM PARCELS 19 & 20. CEH.

PROJECT REFERENCE NO.	SHEET NO.
U-5710A	EC-8/Const. 4
R/W SHEET NO.	
ROADWAY DESIGN ENGINEER	HYDRAULICS ENGINEER

HDR Engineering, Inc. of the Carolinas
555 Fayetteville St, Suite 900 Raleigh, N.C. 27601
N.C.B.E.L.S. License Number: F-0116

NAD 83/NA 2011

-L- PC Sta. 12+38.92

-L- POT Sta. 10+04.90 =
-Y4- POT Sta. 28+36.54

MATCHLINE -L- STA. 14+00, SEE SHEET 5

MATCHLINE -Y4- STA. 30+50, SEE SHEET 7

NOTE:
UTILIZE COIR FIBER MATTING ADJACENT TO WETLANDS/JURISDICTIONAL AREAS, AND AS DIRECTED.

NOTE:
THE OUTSIDE BUFFER, WETLAND OR WATER BOUNDARY SHALL BE CLEARLY MARKED BY HIGHLY VISIBLE FENCING (ORANGE SAFETY FENCE).

★ PROPOSED SIGNAL
SEE SHEET 8 FOR -L- PROFILE

REVISIONS

ROW REV. - JUNE 19, 2019 - ADDITION OF PARCEL 16 (ROW AND TCE), ADDITION OF PARCEL 17 (PUE AND TCE), ADDITION OF PARCEL 18 (PUE), ADDED PUE AND TCE TO PARCEL 1. CEH.
ROW REV. - AUGUST 16, 2019 - REMOVED TEMPORARY CONSTRUCTION EASEMENT (TCE) FROM PARCELS 16 & 17. TCE REDUCED ON PARCEL 1. ADDED PARCEL 15A FOR EASTPORT HOA. CEH.

PLOT DRIVER: NCDOT.pdf_color_eng_50.plt PENTABLE: NCDOT_EC_FINAL BW.DRW.tbl
USER: DWAGNER DATE: 11/26/2019 TIME: 4:20:08 PM
FILE: North_Carolina_Dept_of_Transportation\2014_16_Planning _Design_LSA\U_5710_TO_4_c\06_00_Project_Engineering_and_Design\U-5710A\Erosion Control\U5710A_EC_PSH.dgn

PROJECT REFERENCE NO.	SHEET NO.
U-5710A	EC-9/Const. 5
R/W SHEET NO.	
ROADWAY DESIGN ENGINEER	HYDRAULICS ENGINEER

HDR Engineering, Inc. of the Carolinas
555 Fayetteville St, Suite 900 Raleigh, N.C. 27601
N.C.B.E.L.S. License Number: F-0116

DETAIL A
4' BASE TAIL DITCH
(Not to Scale)

Natural Ground — 3:1 — D — 3:1 — Natural Ground
B

Min. D = 3 Ft.
B = 4 Ft.
Length = 42 FT
Slope = 0.24%

FROM STA. 19+42 TO STA. 20+00 –L– LT
EST. DDE = 110 CY

Place Matting for Erosion Control
on Slope as Work Allows.
Sta. 19+50 to Sta. 20+50 LT (Fill Slope)
Sta. 16+00 to 23+00 RT (Behind Sidewalk)

–Y6– POT Sta. 10+00.00

–L– POC Sta. 15+12.47 =
–Y3– POT Sta. 10+00.00

–L– PT Sta. 16+70.71

–L– POC Sta.15+11.15 =
–Y6– POT Sta. 12+00.00

–Y3– POT Sta. 12+04.82

2' BASE TAIL DITCH
SEE DETAIL 'A'

0508 CLASS 'B' RIP RIP
EST. 8 TONS
21 SY GEO–TEXTILE

0501 CB(G) — 15" RCP–IV
0502 CB(G) — 15" RCP–IV
0503 CB(G) — 15" RCP–IV
0506 CB(G) — 15" RCP–IV
0510 CB(G) — 30" RCP–IV
0511 CB(G) — 15" RCP–IV VAR.
0504 CB(G) — 15" RCP–IV
0505 CB(F) — 15" RCP–IV
0509 CB(F) — 24" RCP–IV VAR.

S 55°17'34.0" E
S 58°24'17.4" E
N 31°35'31.0" E

MATCHLINE –L– STA. 14+00, SEE SHEET 4

MATCHLINE –L– STA. 19+60, SEE SHEET 6

NOTE:
UTILIZE COIR FIBER MATTING ADJACENT TO WETLANDS/JURISDICTIONAL AREAS, AND AS DIRECTED.

NOTE:
THE OUTSIDE BUFFER, WETLAND OR WATER BOUNDARY SHALL BE CLEARLY MARKED BY HIGHLY VISIBLE FENCING (ORANGE SAFETY FENCE).

★ PROPOSED SIGNAL
SEE SHEET 5A FOR DRAINAGE DITCH DETAIL
SEE SHEET 8 FOR –L– PROFILE
SEE SHEET 10 FOR –Y3– PROFILE

REVISIONS

ROW REV. – JUNE 19, 2019 – ADDED TCE TO PARCELS 1 & 2. ADDITIONAL PDE AND TWEAKED ROW ON PARCEL 2. REDUCED TCE ON PARCELS 6, 7, 8 AND 9. CEH.
ROW REV. – AUGUST 16, 2019 – PARCEL 2 RE–NUMBERED TO PARCEL 1. ADDED RIGHT OF WAY AND TCE AROUND CENTERPOINT STUBOUT ON PARCEL 1. REMOVED TCE ON PARCELS 3 & 5 ELIMINATING CLAIMS. PARCEL 15A ADDED FOR EASTPORT HOA. CEH.

PLOT DRIVER: NCDOT_pdf_color_eng_50.plt
USER: DWAGNER
FILE: North_Carolina_Dept_of_Transportation\2014_16_Planning _Design_LSA\U_5710_TO_4_c\06.00_Project_Engineering_and_Design\U-5710A\Erosion Control\U5710A_EC_PSH.dgn
PENTABLE: NCDOT_EC_FINAL BW_DRW.tbl
DATE: 11/26/2019
TIME: 4:20:11 PM

PROJECT REFERENCE NO.	SHEET NO.
U-5710A	EC-10/Const. 6
R/W SHEET NO.	
ROADWAY DESIGN ENGINEER	HYDRAULICS ENGINEER

HDR Engineering, Inc. of the Carolinas
555 Fayetteville St, Suite 900 Raleigh, N.C. 27601
N.C.B.E.L.S. License Number: F-0116

Place Matting for Erosion Control on Slope as Work Allows.
Sta. 19+50 to Sta. 20+50 LT (Fill Slope)
Sta. 16+00 to 23+00 RT (Behind Sidewalk)

DETAIL B
CHANNEL IMPROVEMENTS
(Not to Scale)

Natural Ground — 3:1 — D — 3:1 — Natural Ground
B
Min. D = 3 Ft. B = 5 Ft.
Length = 80 FT
Slope = 0.3%

FROM STA. 22+81 TO STA. 23+24 –L– LT
EST. DDE = 170 CY

NAD 83/NA 2011

CHANNEL RELOCATION SEE DETAIL 'C'

CHANNEL IMPROVEMENTS SEE DETAIL 'B'

–L– PC Sta. 20+31.43

MATCHLINE –L– STA. 19+60, SEE SHEET 5

–L– +35.00 65.00' LT

–L– +70.00 120.00' LT

–L– +05.00 170.00' LT

–L– +31.00 EX. R/W

–Y2– POT Sta. 11+78.23

–L– PT Sta. 23+10.34

–Y2– POT Sta. 10+00.00

–Y2– N 64° 47' 16" E

–Y1– +23.00 77.00' LT & 64.00' LT & EX. R/W

–Y1– PC Sta. 46+42.39

S 86° 29' 09" E

EASTPORT HOA STORMWATER BASIN

DRAWDOWN STRUCTURE

TB JB w/MH

NOTE:
UTILIZE COIR FIBER MATTING ADJACENT TO WETLANDS/JURISDICTIONAL AREAS, AND AS DIRECTED.

NOTE:
THE OUTSIDE BUFFER, WETLAND OR WATER BOUNDARY SHALL BE CLEARLY MARKED BY HIGHLY VISIBLE FENCING (ORANGE SAFETY FENCE).

2020 ADT
2040 ADT
(ADT IN 100's)

DRYSDALE DR. EXT. — US 17 MILITARY CUTOFF RD.
71/72 — 33/34 — 528/723
33/33 — 54/69
528/722 — 54/72 — 112/142
US 17 MILITARY CUTOFF RD. — DRYSDALE DR.

☆ MODIFIED SIGNAL
SEE SHEET 2B-1 FOR CUL-DE-SAC DETAIL
SEE SHEETS 2D-1 THRU 2D-4 FOR POND DETAIL
SEE SHEET 5A FOR DRAINAGE DITCH DETAIL
SEE SHEETS 8 & 9 FOR –L– PROFILE
SEE SHEET 10 FOR –Y2– PROFILE

REVISIONS

ROW REV. – MAY 28, 2019 – PUE ADDED TO PARCEL 12. CEH
ROW REV. – JUNE 19, 2019 – REVISED PDE AND ADDED TCE TO PARCEL 2. REVISED TCE TO STAY OFF OF HOUSE ON PARCEL 10. CEH.
ROW REV. – AUGUST 16, 2019 – PARCEL 2 RE-NUMBERD TO PARCEL 1. ROW ADDED TO PARCEL 11. ROW ADJUSTED AND REDUCED ON PARCELS 12 & 13.
PUE ON PARCEL 12 CHANGED TO DUE AND MODIFIED. PDE ADDED TO PARCELS 12 & 13. CEH.

PLOT DRIVER: NCDOT.pdf.color_eng_50.plt
USER: DWAGNER
FILE: North_Carolina.Dept_of_Transportation\2014.16_Planning _Design_LSA\U_5710_TO_4.cv\06.00_Project_Engineering_and_Design\U-5710A\Erosion Control\U5710A_EC_PSH.dgn
PENTABLE: NCDOT_EC_FINAL BW_DRW.tbl
DATE: 11/26/2019
TIME: 4:20:15 PM

PROJECT REFERENCE NO.	SHEET NO.
U-5710A	EC-11/Const. 7
R/W SHEET NO.	
ROADWAY DESIGN ENGINEER	HYDRAULICS ENGINEER

HDR Engineering, Inc. of the Carolinas
555 Fayetteville St, Suite 900 Raleigh, N.C. 27601
N.C.B.E.L.S. License Number: F-0116

NOTE:
UTILIZE COIR FIBER MATTING ADJACENT TO WETLANDS/JURISDICTIONAL AREAS, AND AS DIRECTED.

NOTE:
THE OUTSIDE BUFFER, WETLAND OR WATER BOUNDARY SHALL BE CLEARLY MARKED BY HIGHLY VISIBLE FENCING (ORANGE SAFETY FENCE).

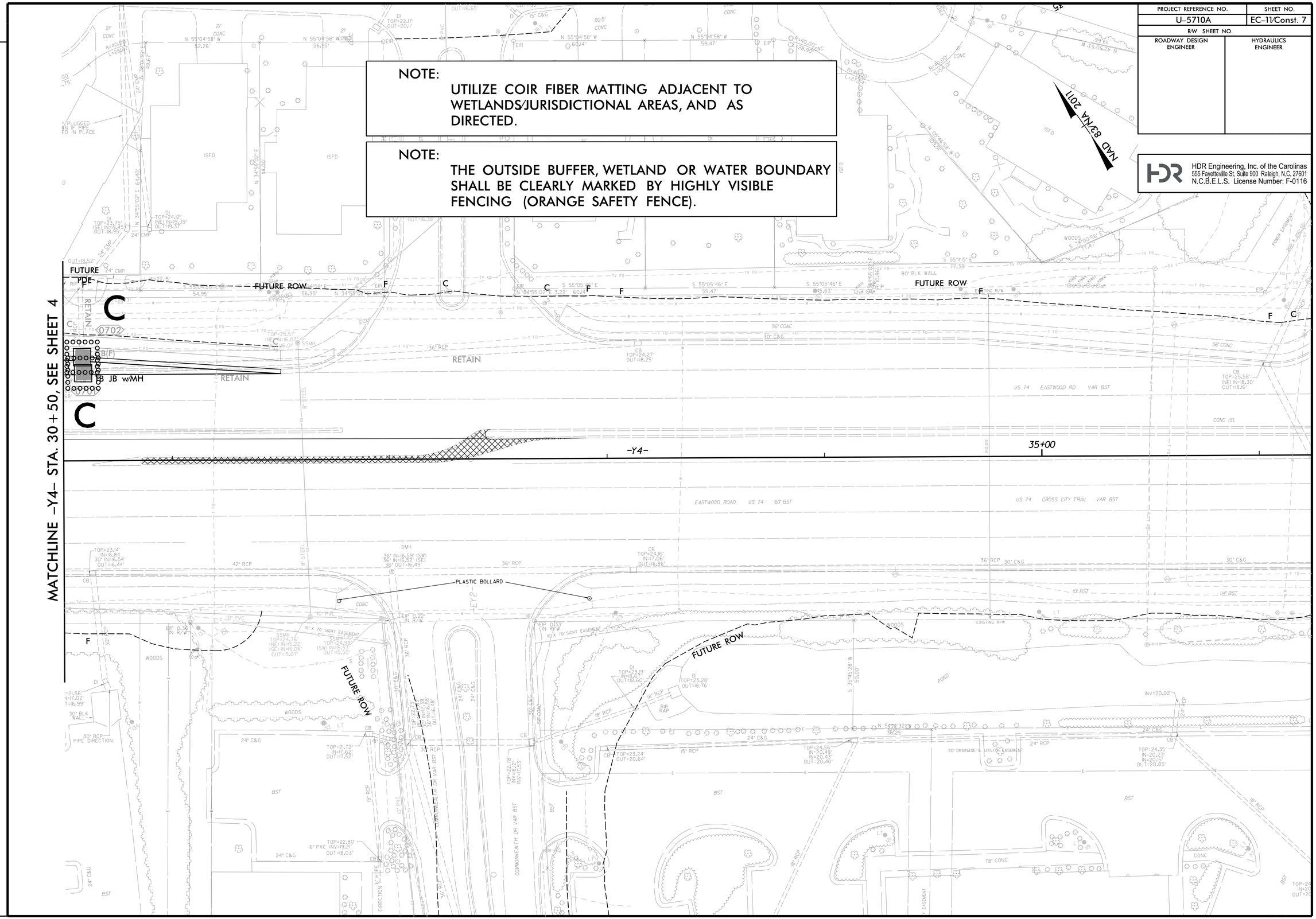

REVISIONS

ROW REV. - JUNE 19, 2019 - ADDITION OF PARCEL 18 (PUE AND DUE). ADDITION OF PARCEL 19 (ROW, DUE AND TCE). ADDITION OF PARCEL 20 (ROW, PUE AND TCE). CEH.
ROW REV. - AUGUST 16, 2019 - REMOVED TEMPORARY CONSTRUCTION EASEMENT (TCE) FROM PARCELS 19 & 20. CEH.

PLOT DRIVER: NCDOT_pdf_color_eng_50.plt PENTABLE: NCDOT_EC_FINAL BW_DRW.tbl
USER: DWAGNER DATE: 11/26/2019 TIME: 4:20:19 PM
FILE: North_Carolina_Dept_of_Transportation\2014_16_Planning _Design_LSA\U_5710_TO_4_c\06.00_Project_Engineering_and_Design\U-5710A\Erosion Control\U5710A_EC_PSH.dgn

DocuSign Envelope ID: 707FF621-57D0-41BA-A894-6E48BB1F2307

TIP PROJECT: U-5710A

CONTRACT: DC00277

STATE OF NORTH CAROLINA
DEPARTMENT OF TRANSPORTATION

PROJECT REFERENCE NO.	SHEET NO.
U-5710A	SIGN-1

SIGNING ENGINEER

NORTH CAROLINA PROFESSIONAL SEAL 022959 ENGINEER RONALD W. KING

12/5/2019

DOCUMENT NOT CONSIDERED FINAL UNLESS ALL SIGNATURES COMPLETED

HDR Engineering, Inc. of the Carolinas
555 Fayetteville St, Suite 900 Raleigh, N.C. 27601
N.C.B.E.L.S. License Number: F-0116

SIGNING PLAN
NEW HANOVER COUNTY

NEW LOCATION NORTHWESTERN QUADRANT CONNECTION BETWEEN US 74 (EASTWOOD RD.) AND US 17 (MILITARY CUTOFF RD.)

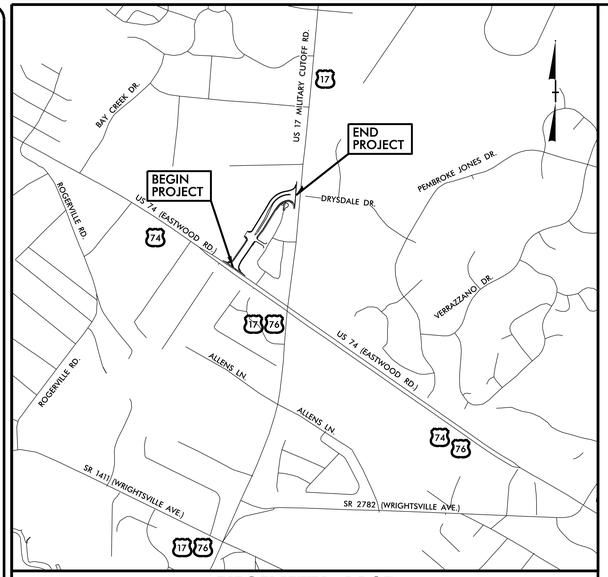

VICINITY MAP
(NOT TO SCALE)

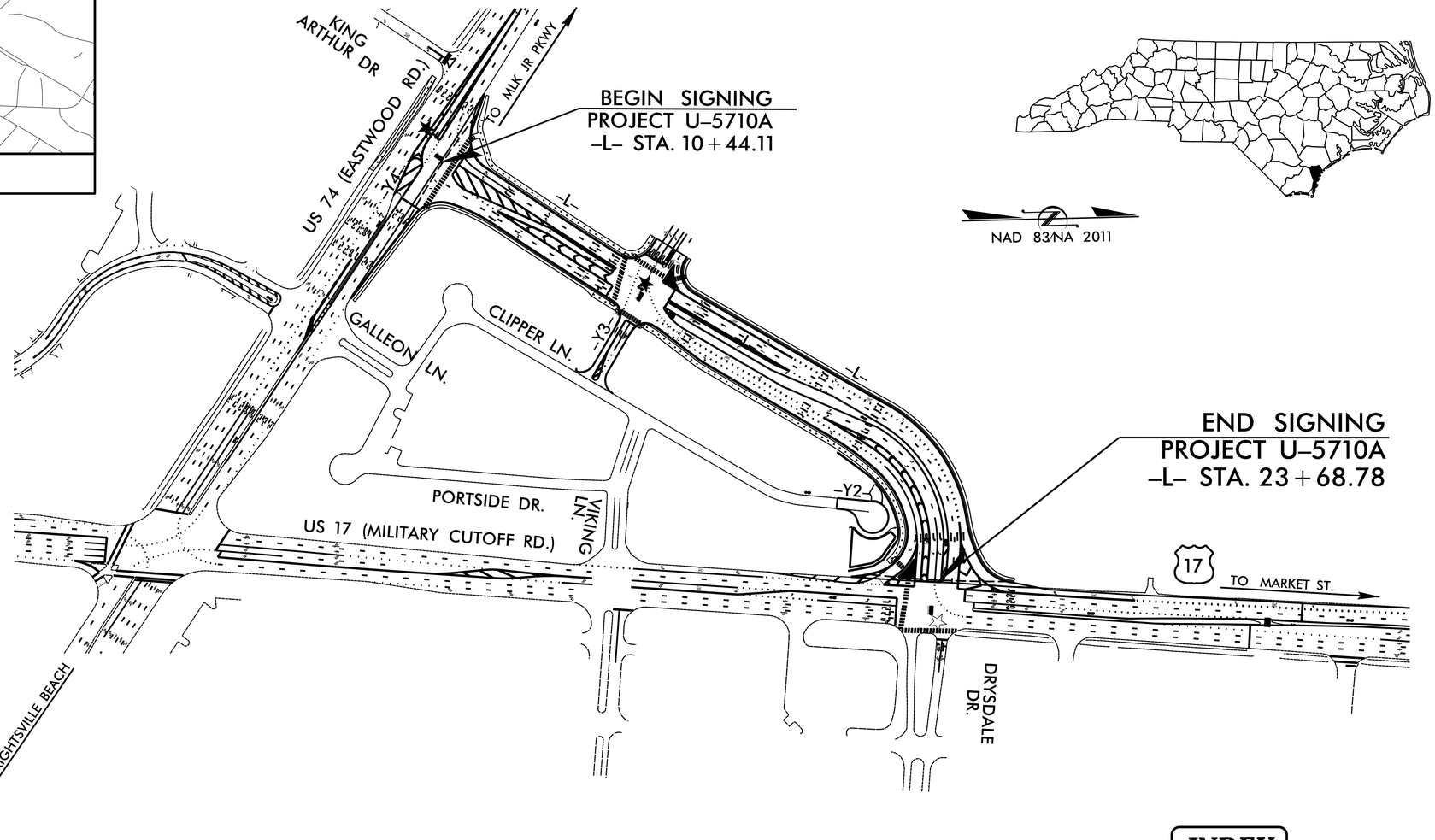

NAD 83/NA 2011

PLAN SUBMITTED TO: N.C.D.O.T. SIGNING & DELINEATION UNIT	
AYMAN ALQUDWAH, P.E.	SIGNING & DELINEATION REGIONAL ENGINEER
MATT TRACEY, P.E.	SIGNING & DELINEATION PROJECT DESIGN ENGINEER

PLAN PREPARED BY: HDR Engineering, Inc. of the Carolinas	
RON KING, PE	PROJECT ENGINEER
RICHARD DRAYTON	TRAFFIC DESIGN ENGINEER

INDEX

SHEET NO.	DESCRIPTION
SIGN-1	TITLE SHEET
SIGN-2	NOTES
SIGN-3	"E" & "F" SIGNS
SIGN-4 & 5	SIGN DETAIL SHEETS

DocuSign Envelope ID: 707FF621-57D0-41BA-A894-6E48BB1F2307

TIP NO.	SHEET NO.
U-5710A	SIGN-2

APPROVED: _____

DATE: _____

SEAL

SIGNING ENGINEER

NORTH CAROLINA PROFESSIONAL SEAL 022959 ENGINEER RONALD W. KING

Ron King

12/5/2019

DOCUMENT NOT CONSIDERED FINAL UNLESS ALL SIGNATURES COMPLETED

HDR Engineering, Inc. of the Carolinas
555 Fayetteville St, Suite 900 Raleigh, N.C. 27601
N.C.B.E.L.S. License Number: F-0116

ROADWAY STANDARD DRAWING

THE FOLLOWING ROADWAY STANDARDS AS APPEAR IN "ROADWAY STANDARD DRAWINGS" - N.C. DEPARTMENT OF TRANSPORTATION - RALEIGH, N.C., DATED JANUARY 2018 ARE APPLICABLE TO THIS PROJECT AND BY REFERENCE HEREBY ARE CONSIDERED A PART OF THESE PLANS:

STD. NO.	TITLE
904.10	ORIENTATION OF GROUND MOUNTED SIGNS
904.50	MOUNTING OF TYPE 'D', 'E' AND 'F' SIGNS ON 'U' CHANNEL POSTS

GENERAL NOTES

. SIGNS FURNISHED BY CONTRACTOR
. CONFIRM IN WRITING AT LEAST 4 MONTHS IN ADVANCE, THE ACTUAL DATE THE DEPARTMENT FURNISHED SIGNS WILL BE REQUIRED.
. IF REMOVAL OR RELOCATION OF SIGNS ON PRIVATE STREET (NON-STATE MAINTAINED) IS REQUIRED DUE TO CONSTRUCTION, THE CONTRACTOR SHALL INFORM THE ENGINEER. THE WORK WILL BE COMPLETED BY OTHERS.
. WHEN NOT STATIONED OR DIMENSIONED ON PLANS, ALL 'E' AND 'F' SIGNS SHALL BE FIELD LOCATED BY THE ENGINEER
. ALL EXISTING SIGNS ON "U" POST WITHIN THE PROJECT LIMITS SHALL BE REMOVED AND DISPOSED OF UNLESS OTHERWISE NOTED ON PLANS.
. WHEN EXISTING SIGNS ARE REMOVED AND INSTALLED ON NEW SUPPORTS, THE RE-ERECTION SHALL IMMEDIATELY FOLLOW THE REMOVAL.
. THE BACKGROUND FOR TYPE E & F SIGNS SHALL BE TYPE C REFLECTIVE SHEETING.

SUMMARY OF QUANTITIES

ITEM NO.		ITEM DESCRIPTION	QUANTITY	UNIT
DESC. NO.	SECT. NO.			
4072000000	903	SUPPORTS, 3 LB STEEL U-CHANNEL	355	L.F.
4025000000	901	CONTRACTOR FURNISHED, TYPE E SIGN	111	S.F.
4025000000	901	CONTRACTOR FURNISHED, TYPE F SIGN	37	S.F.
4102000000	904	SIGN ERECTION, TYPE E	17	EA.
4108000000	904	SIGN ERECTION, TYPE F	4	EA.
4155000000	907	DISPOSAL OF SIGN SYSTEM, U-CHANNEL	1	EA.
4360000000-N	SP	VERTICAL PANEL TYPE 3 OBJECT MARKER-OM3-L	2	EA.

PROJECT NOTES

1. DISPOSAL OF SIGN SYSTEM, U-CHANNEL

NOTES

DocuSign Envelope ID: 707FF621-57D0-41BA-A894-6E48BB1F2307

TIP NO.	SHEET NO.
U-5710A	SIGN-3

APPROVED: _____

DATE: _____

SEAL

SIGNING ENGINEER
NORTH CAROLINA PROFESSIONAL SEAL 022959 ENGINEER RONALD W. KING

Ron King
12/5/2019

DOCUMENT NOT CONSIDERED FINAL UNLESS ALL SIGNATURES COMPLETED

HDR Engineering, Inc. of the Carolinas
555 Fayetteville St, Suite 900 Raleigh, N.C. 27601
N.C.B.E.L.S. License Number: F-0116

(401) QUANTITY REQ'D 2



54 X 18
R6-1 (L)

TWO "U" CHANNEL POSTS PER SIGN

(404) QUANTITY REQ'D 2



12 X 36
OM3-L

ONE VERTICAL PANEL POST PER SIGN

(406) QUANTITY REQ'D 4



36 X 36
R3-7R

ONE "U" CHANNEL POST PER SIGN

(407) QUANTITY REQ'D 1



30 X 30 X 30
R1-2

ONE "U" CHANNEL POST

(408) QUANTITY REQ'D 1

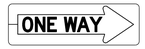

54 X 18
R6-1 (R)

MOUNT BEHIND SIGN 401
IN 1 INSTALL

(411) QUANTITY REQ'D 1



30 X 30
R1-1

ONE "U" CHANNEL POST

(412) QUANTITY REQ'D 1



30 X 36
R3-5R

MOUNT BELOW SIGN 411
IN 1 INSTALLATION

(413) QUANTITY REQ'D 1



36 X 36
R3-4

MOUNT ON SIGNAL MAST
ARM FACING WB US 74
LEFT TURN TRAFFIC ONTO
CAVALIER DR IN 1 INSTALLATION

(414) QUANTITY REQ'D 2



36 X 36
W11-2

FLUORESCENT YELLOW

ONE "U" CHANNEL POST PER SIGN

(415) QUANTITY REQ'D 2



24 X 12
W16-7P

FLUORESCENT YELLOW

MOUNT BELOW SIGN 414
IN 2 INSTALLATIONS

(501)



2-24" X 12"
2-24" X 24"
2-21" X 15"

TWO "U" CHANNEL POSTS

(503)



1-21" X 15"
1-24" X 24"

ONE "U" CHANNEL POST

(504)



1-24" X 12"
1-24" X 24"
1-21" X 15"

ONE "U" CHANNEL POST

(505)



1-21" X 15"
1-24" X 24"

ONE "U" CHANNEL POST

TYPE "E" & "F" SIGNS

DocuSign Envelope ID: 707FF621-57D0-41BA-A894-6E48BB1F2307

PROJECT REFERENCE NO.	SHEET NO.
U–5710A	SIGN–4

SIGNING ENGINEER

NORTH CAROLINA PROFESSIONAL SEAL 022959 ENGINEER RONALD W. KING

Ron King

12/5/2019

DOCUMENT NOT CONSIDERED FINAL UNLESS ALL SIGNATURES COMPLETED

HDR Engineering, Inc. of the Carolinas
555 Fayetteville St. Suite 900 Raleigh, N.C. 27601
N.C.B.E.L.S. License Number: F-0116

NAD 83/NA 2011

BEGIN SIGNING
PROJECT U-5710A
-L- STA. 10+44.11

KING ARTHUR DR

EASTWOOD ROAD US74 -Y4-

COMMONWEALTH DR -Y5-

DRYSDALE DR EXT -L-

CLIPPER LN

PORTSIDE DR

VIKING LN

MILITARY CUTOFF RD

MATCHLINE A-A SEE SIGN-5

MATCHLINE A-A SEE SIGN-5

DocuSign Envelope ID: 707FF621-57D0-41BA-A894-6E48BB1F2307

PROJECT REFERENCE NO.	SHEET NO.
U-5710A	SIGN-5

SIGNING ENGINEER

NORTH CAROLINA PROFESSIONAL SEAL 022959 ENGINEER RONALD W. KING

Ron King

12/5/2019

DOCUMENT NOT CONSIDERED FINAL UNLESS ALL SIGNATURES COMPLETED

HDR Engineering, Inc. of the Carolinas
555 Fayetteville St. Suite 900 Raleigh, N.C. 27601
N.C.B.E.L.S. License Number: F-0116

NAD 83/NA 2011

MATCHLINE A-A SEE SIGN-4

DRYSDALE DR EXT -L-

20+00

RIGHT LANE MUST TURN RIGHT 406

NOISE WALL

503 17 UCT

CLIPPER LANE -Y2-

501 17 17 NORTH SOUTH

414 415

404

END SIGNING
PROJECT U-5710A
-L- STA. 23+68.78

406 RIGHT LANE MUST TURN RIGHT

406 RIGHT LANE MUST TURN RIGHT

PARKER FARM DR

MILITARY CUTOFF RD

407 STOP

MATCHLINE A-A SEE SIGN-4

DRYSDALE DR

CULBRETH DR

DocuSign Envelope ID: C807FD31-DBFA-4D16-BBD4-BA53923CAAE3

TIP PROJECT: U-5701A

CONTRACT: DC00277

STATE OF NORTH CAROLINA
DIVISION OF HIGHWAYS

NEW HANOVER COUNTY

PROJECT REFERENCE NO.	SHEET NO.
U-5710A	Sig-1.0

APPROVED: William J. Hamilton (Docusigned by: A0560D706048484...)

DATE: 11/25/2019

NORTH CAROLINA PROFESSIONAL SEAL 32396 ENGINEER WILLIAM J. HAMILTON

DOCUMENT NOT CONSIDERED FINAL UNLESS ALL SIGNATURES COMPLETED

LOCATION: *NEW LOCATION NORTHWESTERN QUADRANT CONNECTION BETWEEN US 74 (EASTWOOD RD.) AND US 17 (MILITARY CUTOFF RD.)*

TYPE OF WORK: *TRAFFIC SIGNAL AND COMMUNICATION DESIGN*

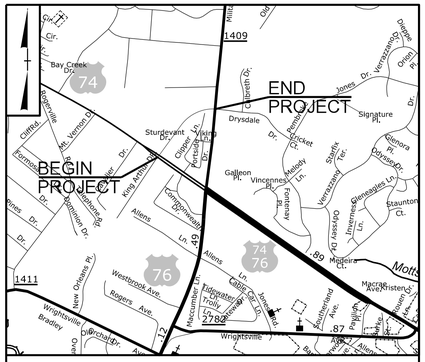

VICINITY MAP

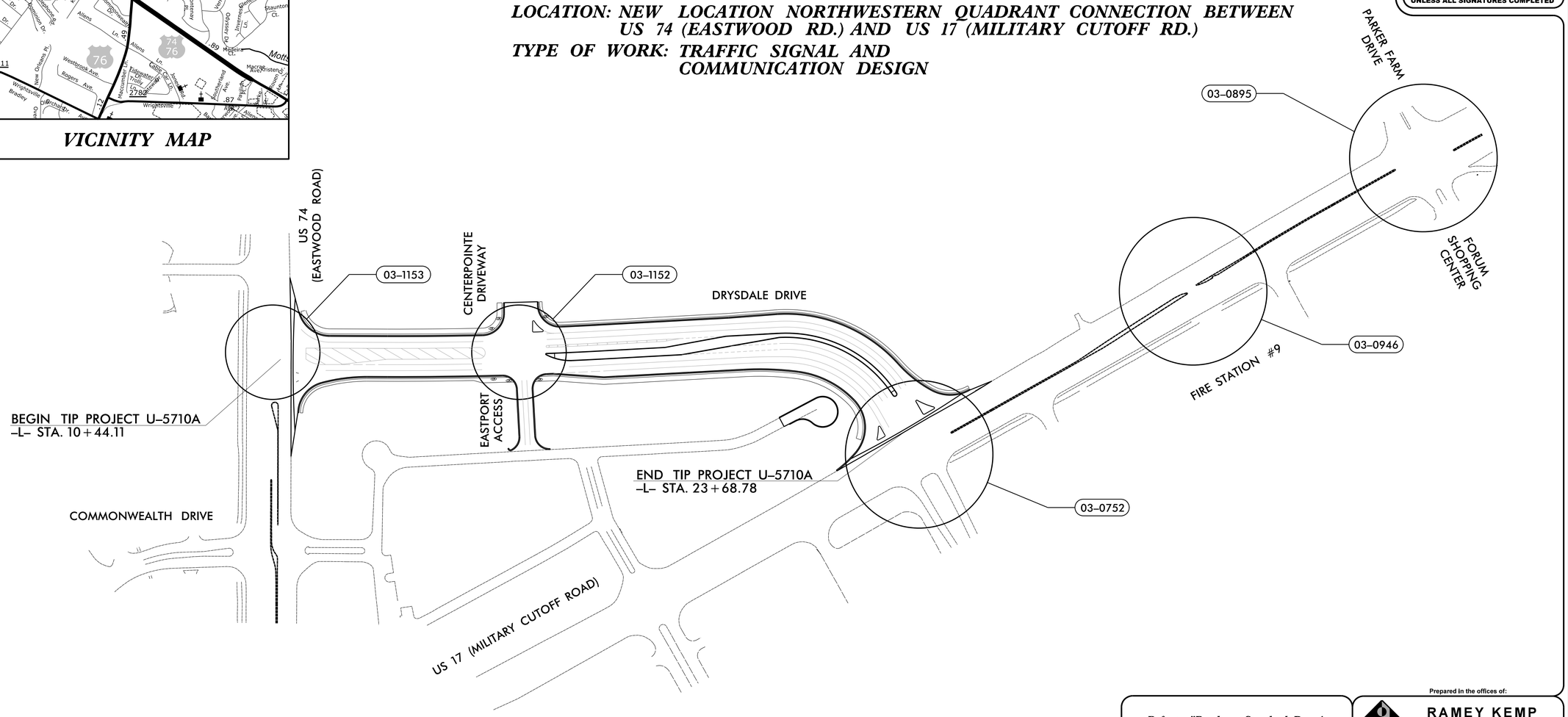

PLANS PREPARED BY:

W. Jason Hamilton, P.E., PTOE – Project Manager

Alicia D. Andrews, E.I. – Project Engineer

INDEX OF PLANS

Sheet Number	SIN	Location/ Description
Sig. 1.0	–	Title Sheet
Sig. 2.0–2.9	03–0752	US 17 (Military Cutoff Road) at Drysdale Drive
Sig. 3.0–3.4	03–1153	US 74 (Eastwood Road) at Drysdale Drive
Sig. 4.0–4.7	03–1152	Drysdale Drive at Centerpointe/Eastport Access
Sig. 5.0–5.2	03–0946	US 17 (Military Cutoff Road) at Wilmington Fire Station #19
Sig. 6.0–6.1	03–0895	US 17 (Military Cutoff Road) at Forum Shopping Center/Parker Farm Drive
Sig. 7.0–Sig. M8	–	Signal Standard Drawings
SCP 1–6	–	Cable Routing and Splice Details

Refer to "Roadway Standard Drawings NCDOT" dated January 2018 and "Standard Specifications for Roads and Structures" dated January 2018.

Prepared in the offices of:

RAMEY KEMP & ASSOCIATES, INC.
Transportation Engineers
5808 Farlington Place, Suite 100
Raleigh, North Carolina 27609
919-872-5115 Tel. 919-878-5416 Fax.
www.rameykemp.com

LEGEND

(##-####) *SIGNAL INVENTORY NUMBER*

INTELLIGENT TRANSPORTATION AND SIGNALS UNIT

Contacts:

Zachary Little, P.E. – Eastern Region Signals Engineer

D. Todd Joyce, P.E. – Signal Equipment Design Review Engineer

Neil Avery – ITS Engineer

DocuSign Envelope ID: 8BEE47C3-CECA-4717-8B72-8C77D2788807

PROJECT REFERENCE NO.	SHEET NO.
U-5710A	Sig-2.0

PHASING DIAGRAM

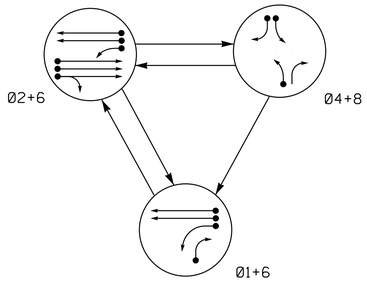

PHASING DIAGRAM DETECTION LEGEND

- DETECTED MOVEMENT
- UNDETECTED MOVEMENT (OVERLAP)
- UNSIGNALIZED MOVEMENT
- PEDESTRIAN MOVEMENT

TABLE OF OPERATION

SIGNAL FACE	PHASE 0 1 + 6	PHASE 0 2 + 6	PHASE 0 4 + 8	FLASH
11	←	←F	→R	→Y
21,22,23	R	G	R	Y
41,42	R	R	G	R
61,62	G	G	R	Y
81	R	R	G	R
82	R/←	R	G	R

SIGNAL FACE I.D.

All Heads L.E.D.

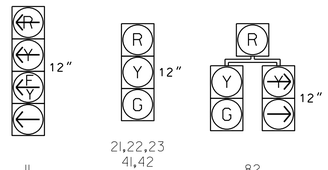

OASIS 2070 LOOP & DETECTOR INSTALLATION CHART

INDUCTIVE LOOPS					DETECTOR PROGRAMMING						
LOOP/ ZONE	SIZE (FT)	DISTANCE FROM STOPBAR (FT)	TURNS	NEW LOOP	PHASE	CALLING	EXTENSION	FULL TIME DELAY	STRETCH TIME	DELAY TIME	SYSTEM LOOP / NEW CARD
1A	6X40	0	2-4-2	Y	1	Y	Y	-	-	10	- Y
					6	Y	Y	Y	-	3	– Y
1B	6X40	0	*	Y	1	Y	Y	-	-	15	- *
2A	6X6	300	5	Y	2	Y	Y	-	-	-	- Y
2B	6X6	300	5	Y	2	Y	Y	-	-	-	- Y
2C	6X6	300	5	Y	2	Y	Y	-	-	-	- Y
4A	6X40	0	*	Y	4	Y	Y	-	-	5	- *
4B	6X40	0	*	Y	4	Y	Y	-	-	15	- *
6A	6X6	300	5	Y	6	Y	Y	-	-	-	- Y
6B	6X6	300	5	Y	6	Y	Y	-	-	-	- Y
8A	6X40	0	*	Y	8	Y	Y	-	-	-	- *

* Multizone Microwave Detection Zone

3 Phase Fully Actuated (Wilmington Signal System)

1. Refer to "Roadway Standard Drawings NCDOT" dated January 2018, "Standard Specifications for Roads and Structures" dated January 2018.
2. Do not program signal for late night flashing operation unless otherwise directed by the Engineer.
3. Phase 1 may be lagged.
4. Set all detector units to presence mode.
5. Locate new cabinet so as not to obstruct sight distance of vehicles turning right on red.
6. Maximum times shown in timing chart are for free-run operation only. Coordinated signal system timing values supersede these values.
7. Incorporate Microwave Detection system for vehicle detection.
8. Provide the Engineer with the Manufacturer's approved Microwave Detection locations and mounting heights to obtain detection zones as shown.
9. Signal system data:
   Controller Asset #0752.
10. Contractor shall ensure that existing communication fiber is maintained in new cabinet.
11. Refer to pavement marking plans for stop bar locations.
12. Metal strain poles shall be black powder-coated.
13. Existing metal poles/mast arms shall be removed and returned to Division 3 Traffic Services.

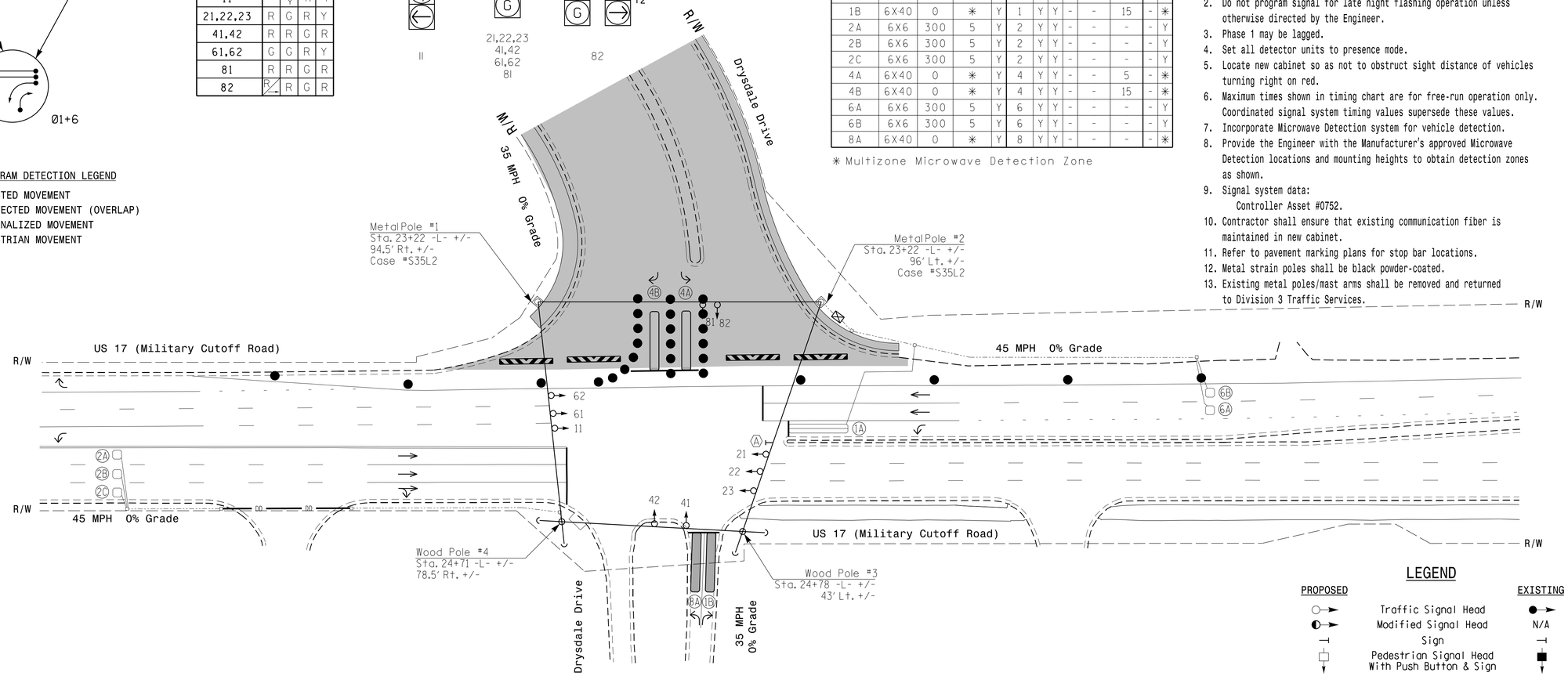

LEGEND

PROPOSED		EXISTING
○→	Traffic Signal Head	●→
◐→	Modified Signal Head	N/A
⊣	Sign	⊣
⊓↓	Pedestrian Signal Head With Push Button & Sign	■↓
○	Signal Pole with Guy	●
○⌐	Signal Pole with Sidewalk Guy	●⌐
▭	Inductive Loop Detector	▭
⊠	Controller & Cabinet	⊠
□	Junction Box	■
·····	2-in Underground Conduit	·····
N/A	Right of Way	———
→	Directional Arrow	→
◯	Metal Strain Pole	■
⬭	Video Detection Zone	⬭
Ⓐ	No Left Turn Sign (R3-2)	Ⓐ

OASIS 2070 TIMING CHART

FEATURE	PHASE 1	2	4	6	8
Min Green 1 *	5	12	5	12	5
Extension 1 *	2.0	6.0	2.0	6.0	2.0
Max Green 1 *	15	100	25	100	25
Yellow Clearance	3.0	4.5	3.0	4.5	3.0
Red Clearance	3.6	2.1	2.1	2.1	3.1
Walk 1 *	-	-	-	-	-
Don't Walk 1	-	-	-	-	-
Seconds Per Actuation *	-	1.2	-	1.5	-
Max Variable Initial *	-	34	-	34	-
Time Before Reduction *	-	15	-	15	-
Time To Reduce *	-	30	-	30	-
Minimum Gap	-	3.0	-	3.0	-
Recall Mode	-	MIN RECALL	-	MIN RECALL	-
Vehicle Call Memory	-	YELLOW	-	YELLOW	-
Dual Entry	-	-	ON	-	ON
Simultaneous Gap	ON	ON	ON	ON	ON

* These values may be field adjusted. Do not adjust Min Green and Extension times for phases 2 and 6 lower than what is shown. Min Green for all other phases should not be lower than 4 seconds.

Signal Upgrade - Temporary Design

DOCUMENT NOT CONSIDERED FINAL UNLESS ALL SIGNATURES COMPLETED

Prepared in the offices of:
RAMEY KEMP & ASSOCIATES, INC.
Transportation Engineers
5808 Faringdon Place, Suite 100
Raleigh, North Carolina 27609
919-872-5115 Tel. 919-878-5416 Fax.
www.rameykemp.com, NC License No. C-0910

Prepared for: Transportation Mobility and Safety Division, NORTH CAROLINA DEPARTMENT OF TRANSPORTATION, Signal Design Section
750 N.Greenfield Pkwy.Garner,NC 27529

SCALE 0 40 1"=40'

US 17 (Military Cutoff Road) at Drysdale Drive

Division 3 New Hanover County Wilmington

PLAN DATE: November 2019 REVIEWED BY: WJ Hamilton

PREPARED BY: A. Andrews RKA PROJ. NO.: 19258 (040)

REVISIONS	INIT.	DATE

SEAL 32396 NORTH CAROLINA PROFESSIONAL ENGINEER WILLIAM J. HAMILTON

DocuSigned by: William J. Hamilton A566DD7D4B4B4B4... SIGNATURE 11/25/19 DATE

SIG. INVENTORY NO. 03-0752T

11/25/2019
...\404-Design\03-0752_sig-1.dgn
User:jstiff

DocuSign Envelope ID: 8BEE47C3-CECA-4717-8B72-8C77D2788807

EDI MODEL 2018ECLip-NC CONFLICT MONITOR PROGRAMMING DETAIL

(remove jumpers and set switches as shown)

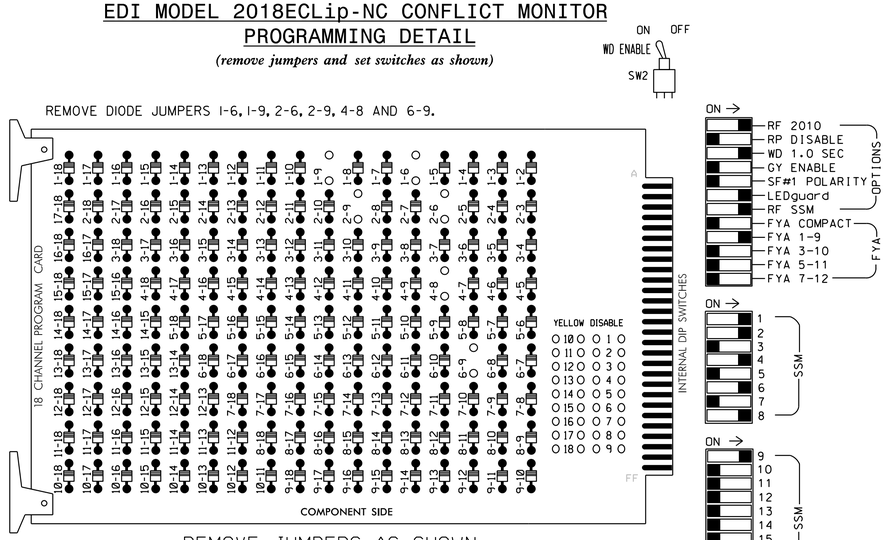

REMOVE JUMPERS AS SHOWN

NOTES:

1. Card is provided with all diode jumpers in place. Removal of any jumper allows its channels to run concurrently.
2. Ensure jumpers SEL2-SEL5 and SEL9 are present on the monitor board.
3. Ensure that Red Enable is active at all times during normal operation.
4. Integrate monitor with Ethernet network in cabinet.

■ = DENOTES POSITION OF SWITCH

INPUT FILE POSITION LAYOUT

(front view)

		1	2	3	4	5	6	7	8	9	10	11	12	13	14
FILE "I"	U	ø1 1A	ø2 2A	ø2 2C	SLOT EMPTY	SLOT EMPTY	SLOT EMPTY	SLOT EMPTY	SLOT EMPTY	SLOT EMPTY	SLOT EMPTY	SLOT EMPTY	SLOT EMPTY	SLOT EMPTY	FS DC ISOLATOR
	L	NOT USED	ø2 2B	NOT USED											ST DC ISOLATOR
FILE "J"	U	SLOT EMPTY	ø6 6A	SLOT EMPTY	WIRED INPUT ⊗	SLOT EMPTY	SLOT EMPTY	SLOT EMPTY	SLOT EMPTY	SLOT EMPTY	SLOT EMPTY	SLOT EMPTY	SLOT EMPTY	SLOT EMPTY	SLOT EMPTY
	L		ø6 6B												

EX.: 1A, 2A, ETC. = LOOP NO.'S

FS = FLASH SENSE
ST = STOP TIME

⊗ Wired Input - Do not populate slot with detector card

SPECIAL DETECTOR NOTE

For detector zones 1B, 4A, 4B and 8A, install a microwave detection system for vehicle detection. Perform installation according to the manufacturer's directions and NCDOT engineer approved mounting locations to accomplish the detection schemes shown on the Signal Design Plans.

LOAD RESISTOR INSTALLATION DETAIL

(install resistor as shown below)

ACCEPTABLE VALUES	
VALUE (ohms)	WATTAGE
1.5K - 1.9K	25W (min)
2.0K - 3.0K	10W (min)

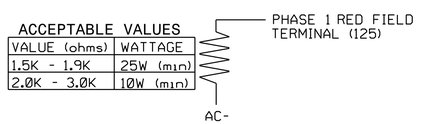

NOTES

1. To prevent "flash-conflict" problems, insert red flash program blocks for all unused vehicle load switches in the output file. The installer shall verify that signal heads flash in accordance with the Signal Plans.
2. Program phases 4 and 8 for Dual Entry.
3. Enable Simultaneous Gap-Out for all phases.
4. Program phases 2 and 6 for Variable Initial and Gap Reduction.
5. Program phases 2 and 6 for Startup In Green.
6. Program phases 2 and 6 for Yellow Flash and overlap 1 as Wag Overlaps.
7. The cabinet and controller are part of the Wilmington Signal System.

EQUIPMENT INFORMATION

CONTROLLER.....2070E
CABINET.....332 /W/ AUX
SOFTWARE.....ECONOLITE OASIS
CABINET MOUNT.....BASE
OUTPUT FILE POSITIONS...18 WITH AUX. OUTPUT FILE
LOAD SWITCHES USED.....S1,S2,S5,S8,S11,AUX S1
PHASES USED.....1,2,4,6,8
OVERLAP "A".....1+2
OVERLAP "B".....NOT USED
OVERLAP "C".....NOT USED
OVERLAP "D".....NOT USED

INPUT FILE CONNECTION & PROGRAMMING CHART

LOOP NO.	LOOP TERMINAL	INPUT FILE POS.	PIN NO.	INPUT ASSIGNMENT NO.	DETECTOR NO.	NEMA PHASE	CALL	EXTEND	FULL TIME DELAY	STRETCH TIME	DELAY TIME
1A[1]	TB2-1,2	I1U	56	18	1	1	Y	Y			10
	-	J4U	48	10	26	6	Y	Y	Y		3
2A	TB2-5,6	I2U	39	1	2	2	Y	Y			
2B	TB2-7,8	I2L	43	5	12	2	Y	Y			
2C	TB2-9,10	I3U	63	25	32	2	Y	Y			
6A	TB3-5,6	J2U	40	2	6	6	Y	Y			
6B	TB3-7,8	J2L	44	6	16	6	Y	Y			

[1] Add jumper from I1-W to J4-W, on rear of input file.

INPUT FILE POSITION LEGEND: J2L
FILE J
SLOT 2
LOWER

PROJECT REFERENCE NO.	SHEET NO.
U-5710A	Sig-2.1

SIGNAL HEAD HOOK-UP CHART

LOAD SWITCH NO.	S1		S2	S3	S4	S5	S6	S7	S8	S9	S10	S11	S12	AUX S1	AUX S2	AUX S3	AUX S4	AUX S5	AUX S6
CMU CHANNEL NO.	1		2	13	3	4	14	5	6	15	7	8	16	9	10	17	11	12	18
PHASE	1		2	2 PED	3	4	4 PED	5	6	6 PED	7	8	8 PED	OLA	OLB	SPARE	OLC	OLD	SPARE
SIGNAL HEAD NO.	11 ★	82	21,22, 23	NU	NU	41,42	NU	NU	61,62	NU	NU	81,82	NU	11 ★	NU	NU	NU	NU	NU
RED	✳		128			101			134			107							
YELLOW			129			102			135			108							
GREEN			130			103			136			109							
RED ARROW														A121					
YELLOW ARROW		126												A122					
FLASHING YELLOW ARROW														A123					
GREEN ARROW	127	127																	

NU = Not Used
✳ Denotes install load resistor. See load resistor installation detail this sheet.
★ See pictorial of head wiring in detail below.

FYA SIGNAL WIRING DETAIL

(wire signal head as shown)

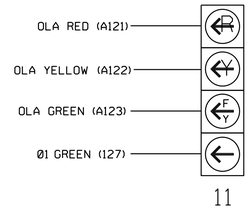

NOTE

1. The sequence display for signal head 11 requires special programming. See sheet 2 for programming instructions.

THIS ELECTRICAL DETAIL IS FOR
THE SIGNAL DESIGN: 03-0752T
DESIGNED: Nov 2019
SEALED: 11-25-2019
REVISED: N/A

Electrical Detail - Temporary Design
Sheet 1 of 2

DOCUMENT NOT CONSIDERED FINAL UNLESS ALL SIGNATURES COMPLETED

Prepared in the offices of:
RAMEY KEMP & ASSOCIATES, INC.
Transportation Engineers
5808 Faringdon Place, Suite 100
Raleigh, North Carolina 27609
919-872-5115 Tel. 919-878-5416 Fax.
www.rameykemp.com, NC License No. C-0910

ELECTRICAL AND PROGRAMMING DETAILS FOR:

NC Department of Transportation Traffic Engineering & Safety Systems Branch Signals Management Section
750 N.Greenfield Pkwy.Garner,NC 27529

US 17 (Military Cutoff Road) at Drysdale Drive

Division 3 New Hanover County Wilmington

PLAN DATE: November 2019	REVIEWED BY: WJ Hamilton
PREPARED BY: A. Andrews	RKA PROJ. NO.: 19258 (040)

REVISIONS	INIT.	DATE

SEAL
NORTH CAROLINA PROFESSIONAL SEAL 32396 ENGINEER WILLIAM J. HAMILTON

DocuSigned by: William J. Hamilton A0660D7B454A4A1... SIGNATURE 11/25/19 DATE

SIG. INVENTORY NO. 03-0752T

11/25/2019
J:\Projects\Design\03-0752_ele-t.dgn
User:lstiff

DocuSign Envelope ID: 8BEE47C3-CECA-4717-8B72-8C77D2788807

PROJECT REFERENCE NO.	SHEET NO.
U-5710A	Sig-2.2

LOGICAL I/O PROCESSOR PROGRAMMING DETAIL
TO PRODUCE SPECIAL FYA-PPLT SIGNAL SEQUENCE

(program controller as shown below)

1. FROM MAIN MENU PRESS '2' (PHASE CONTROL), THEN '1' (PHASE CONTROL FUNCTIONS). SCROLL TO THE BOTTOM OF THE MENU AND ENABLE ACT LOGIC COMMANDS 1, 2 AND 3.

2. FROM MAIN MENU PRESS '6' (OUTPUTS), THEN '3' (LOGICAL I/O PROCESSOR).

```
  LOGICAL I/O COMMAND #1  (+/-COMMAND#)
IF  ACTIVE PHASE      #1  IS ON
AND RED CLEAR ON PHASE #1  IS ON

                SCROLL DOWN

 THEN:
 SET OUTPUT  ASSIGNMENT #50 ON
 SET OUTPUT  ASSIGNMENT #51 OFF
```

NOTE: LOGIC FOR PHASE 1 RED CLEAR WHEN TRANSITIONING FROM PHASE 1 TO PHASE 2 (HEAD 11).

PRESS '+'

```
  LOGICAL I/O COMMAND #2  (+/-COMMAND#)
IF  ACTIVE PHASE      #1  IS ON

                SCROLL DOWN

 THEN:
 SET OUTPUT  ASSIGNMENT #52 OFF
```

NOTE: LOGIC FOR SWITCHING FLASHING YELLOW ARROW "OFF" DURING PHASE 1 (HEAD 11).

PRESS '+'

```
  LOGICAL I/O COMMAND #3  (+/-COMMAND#)
IF  YELLOW ON PHASE   #1  IS ON

                SCROLL DOWN

 THEN:
 SET OUTPUT  ASSIGNMENT #51 ON
```

NOTE: LOGIC FOR YELLOW ARROW CLEARANCE FROM PHASE 1 (HEAD 11).

LOGIC I/O PROCESSOR PROGRAMMING COMPLETE

OUTPUT REFERENCE SCHEDULE

OUTPUT 50 = Overlap A Red
OUTPUT 51 = Overlap A Yellow
OUTPUT 52 = Overlap A Green

OVERLAP PROGRAMMING DETAIL

(program controller as shown below)

FROM MAIN MENU PRESS '8' (OVERLAPS), THEN '1' (VEHICLE OVERLAP SETTINGS).

```
 PAGE 1: VEHICLE OVERLAP 'A' SETTINGS
 PHASE:          !12345678910111213141516
VEH OVL PARENTS:!XX
VEH OVL NOT VEH:!
VEH OVL NOT PED:!
VEH OVL GRN EXT:!
STARTUP COLOR: _ RED  _ YELLOW  _ GREEN
FLASH COLORS:  _ RED  _ YELLOW  X GREEN
SELECT VEHICLE OVERLAP OPTIONS:   (Y/N)
FLASH YELLOW IN CONTROLLER FLASH?...Y
GREEN EXTENSION (0-255 SEC).........0
YELLOW CLEAR (0=PARENT,3-25.5 SEC)..0.0
RED CLEAR (0=PARENT,0.1-25.5 SEC)...0.0
OUTPUT AS PHASE # (0=NONE, 1-16)....0
```

← NOTICE GREEN FLASH

OVERLAP PROGRAMMING COMPLETE

THIS ELECTRICAL DETAIL IS FOR THE SIGNAL DESIGN: 03-0752T
DESIGNED: Nov 2019
SEALED: 11-25-2019
REVISED: N/A

Prepared in the offices of:

RAMEY KEMP & ASSOCIATES, INC.
Transportation Engineers
5808 Farlington Place, Suite 100
Raleigh, North Carolina 27609
919-872-5115 Tel. 919-878-5416 Fax.
www.rameykemp.com

Electrical Detail - Temporary Design
Sheet 2 of 2

ELECTRICAL AND PROGRAMMING DETAILS FOR:

US 17 (Military Cutoff Road)
at
Drysdale Drive

Division 3 New Hanover County Wilmington

PLAN DATE:	November 2019	REVIEWED BY:	WJ Hamilton
PREPARED BY:	A. Andrews	RKA PROJ. NO.:	19258 (040)

REVISIONS	INIT.	DATE

750 N.Greenfield Pkwy,Garner,NC 27529

DOCUMENT NOT CONSIDERED FINAL UNLESS ALL SIGNATURES COMPLETED

SEAL
NORTH CAROLINA PROFESSIONAL SEAL 32396 ENGINEER WILLIAM J. HAMILTON

DocuSigned by: William J. Hamilton A5660370048401... SIGNATURE 11/25/19 DATE

SIG. INVENTORY NO. 03-0752T

11/25/2019
e:\projects\19258\prod\pm03-0752_e102-1.dgn
User:jstiff

DocuSign Envelope ID: 8BEE47C3-CECA-4717-8B72-8C77D2788807

PROJECT REFERENCE NO.	SHEET NO.
U-5710A	Sig-2.3

SIGNAL FACE I.D.

All Heads L.E.D.

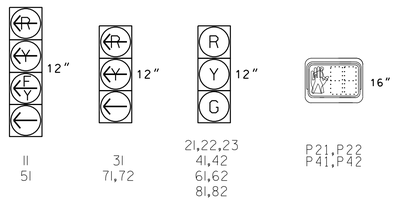

OASIS 2070 LOOP & DETECTOR INSTALLATION CHART

INDUCTIVE LOOPS					DETECTOR PROGRAMMING						
LOOP/ ZONE	SIZE (FT)	DISTANCE FROM STOPBAR (FT)	TURNS	NEW LOOP	PHASE	CALLING	EXTENSION	FULL TIME DELAY	STRETCH TIME	DELAY TIME	SYSTEM LOOP	NEW CARD
1A	6X40	0	2-4-2	-	1	Y	Y	-	-	*10	-	-
					6#	Y	Y	Y	-	3	—	-
2A	6X6	300	5	-	2	Y	Y	-	-	-	-	-
2B	6X6	300	5	-	2	Y	Y	-	-	-	-	-
2C	6X6	300	5	-	2	Y	Y	-	-	-	-	-
3A	6X40	0	⅋	-	3	Y	Y	-	-	-	-	⅋
4A	6X40	0	2-4-2	Y	4	Y	Y	-	-	-	-	Y
5A	6X40	0	2-4-2	Y	5	Y	Y	-	-	**10	-	Y
					2#	Y	Y	Y	-	3	—	Y
6A	6X6	300	5	-	6	Y	Y	-	-	-	-	-
6B	6X6	300	5	-	6	Y	Y	-	-	-	-	-
7A	6X40	0	2-4-2	Y	7	Y	Y	-	-	3	-	Y
7B	6X40	0	2-4-2	Y	7	Y	Y	-	-	-	-	Y
8A	6X40	0	⅋	-	8	Y	Y	-	-	-	-	⅋

* Disable delay during Alternate Phasing operation.
** Reduce delay to 3 seconds during Alternate Phasing operation.
# Disable phase call for loop during Alternate Phasing operation.
⅋ Multizone Microwave Detection Zone

8 Phase Fully Actuated (Wilmington Signal System)

1. Refer to "Roadway Standard Drawings NCDOT" dated January 2018, "Standard Specifications for Roads and Structures" dated January 2018.
2. Do not program signal for late night flashing operation unless otherwise directed by the Engineer.
3. Phase 1 and/or phase 5 may be lagged.
4. Phase 3 and/or phase 7 may be lagged.
5. Reposition existing signal heads numbered 41, 42 and 81.
6. Set all detector units to presence mode.
7. Omit "WALK" and flashing "DON'T WALK" with no pedestrian calls.
8. Program the pedestrian heads to countdown the flashing "DON'T WALK" time only.
9. The Division Traffic Engineer will determine the hours of use for each phasing plan.
10. Maximum times shown in timing chart are for free-run operation only. Coordinated signal system timing values supersede these values.
11. Relabel existing loops 8A as 3A and 1B as 8A.
12. Incorporate Microwave Detection system for vehicle detection.
13. Provide the Engineer with the Manufacturer's approved Microwave Detection locations and mounting heights to obtain detection zones as shown.
14. Signal system data:
    Controller Asset #0752.
15. Refer to pavement marking plans for stop bar and crosswalk locations.
16. Type II pedestals shall be black powder-coated.

OASIS 2070 TIMING CHART

FEATURE	PHASE							
	1	2	3	4	5	6	7	8
Min Green 1 *	5	12	5	5	5	12	5	5
Extension 1 *	2.0	6.0	2.0	2.0	2.0	6.0	2.0	2.0
Max Green 1 *	15	100	25	25	15	100	25	25
Yellow Clearance	3.0	4.5	3.0	3.8	3.0	4.5	3.0	3.8
Red Clearance	3.6	2.1	2.8	2.0	3.3	2.1	3.3	2.5
Walk 1 *	-	7	-	7	-	-	-	-
Don't Walk 1	-	29	-	27	-	-	-	-
Seconds Per Actuation *	-	1.2	-	-	-	1.5	-	-
Max Variable Initial *	-	34	-	-	-	34	-	-
Time Before Reduction *	-	15	-	-	-	15	-	-
Time To Reduce *	-	30	-	-	-	30	-	-
Minimum Gap	-	3.0	-	-	-	3.0	-	-
Recall Mode	-	MIN RECALL	-	-	-	MIN RECALL	-	-
Vehicle Call Memory	-	YELLOW	-	-	-	YELLOW	-	-
Dual Entry	-	-	-	-	-	-	-	-
Simultaneous Gap	ON	ON	ON	ON	ON	ON	ON	ON

* These values may be field adjusted. Do not adjust Min Green and Extension times for phases 2 and 6 lower than what is shown. Min Green for all other phases should not be lower than 4 seconds.

LEGEND

PROPOSED		EXISTING
	Traffic Signal Head	
	Modified Signal Head	N/A
	Sign	
	Pedestrian Signal Head With Push Button & Sign	
	Signal Pole with Guy	
	Signal Pole with Sidewalk Guy	
	Inductive Loop Detector	
	Controller & Cabinet	
	Junction Box	
	2-in Underground Conduit	
N/A	Right of Way	
	Directional Arrow	
	"Shark's Teeth" Yieldbar	
	Metal Strain Pole	
	Type II Signal Pedestal	
	Microwave Detection Zone	
Ⓐ	Street Name Sign	Ⓐ

Signal Upgrade - Final Design
Sheet 1 of 2

DOCUMENT NOT CONSIDERED FINAL UNLESS ALL SIGNATURES COMPLETED

Prepared in the offices of:
RAMEY KEMP & ASSOCIATES, INC.
Transportation Engineers
5808 Faringdon Place, Suite 100
Raleigh, North Carolina 27609
919-872-5115 Tel. 919-878-5416 Fax.
www.rameykemp.com, NC License No. C-0910

Prepared for:
Transportation Mobility and Safety Division
NORTH CAROLINA DEPARTMENT OF TRANSPORTATION
Signal Design Section
750 N.Greenfield Pkwy,Garner,NC 27529

SCALE 0 40 1"=40'

US 17 (Military Cutoff Road) at Drysdale Drive

Division 3 New Hanover County Wilmington

PLAN DATE:	November 2019	REVIEWED BY:	WJ Hamilton
PREPARED BY:	A. Andrews	RKA PROJ. NO.:	19258 (040)

REVISIONS	INIT.	DATE

SEAL
NORTH CAROLINA PROFESSIONAL SEAL 32396 ENGINEER WILLIAM J. HAMILTON

DocuSigned by: William J. Hamilton A0560D7D6E4B4B4... 11/25/19
SIGNATURE DATE

SIG. INVENTORY NO. 03-0752

11/25/2019
...#04-Design#03-0752_sig.dgn
User:jsiff

DocuSign Envelope ID: 8BEE47C3-CECA-4717-8B72-8C77D2788807

PROJECT REFERENCE NO.	SHEET NO.
U-5710A	Sig-2.4

DEFAULT PHASING DIAGRAM

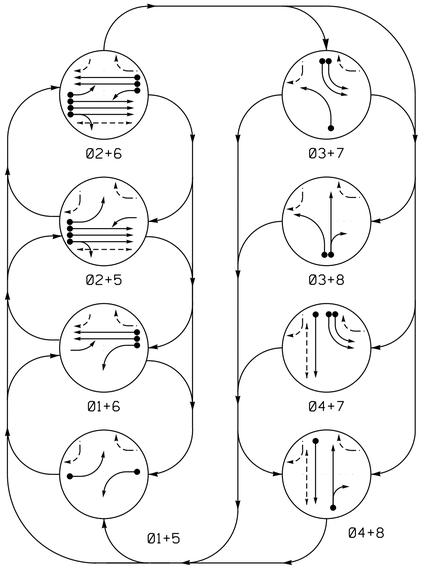

PHASING DIAGRAM DETECTION LEGEND

- DETECTED MOVEMENT
- UNDETECTED MOVEMENT (OVERLAP)
- UNSIGNALIZED MOVEMENT
- PEDESTRIAN MOVEMENT

DEFAULT PHASING TABLE OF OPERATION

SIGNAL FACE	PHASE 01+5	01+6	02+5	02+6	03+7	03+8	04+7	04+8	FLASH
11	←—	←—	←FY	←FY	~~←R~~	~~←R~~	~~←R~~	~~←R~~	~~←Y~~
21,22,23	R	R	G	G	R	R	R	R	Y
31	~~←R~~	~~←R~~	~~←R~~	~~←R~~	←—	←—	~~←R~~	~~←R~~	~~←R~~
41,42	R	R	R	R	R	R	G	G	R
51	←—	←FY	←—	←FY	~~←R~~	~~←R~~	~~←R~~	~~←R~~	~~←Y~~
61,62	R	G	R	G	R	R	R	R	Y
71,72	~~←R~~	~~←R~~	~~←R~~	~~←R~~	←—	~~←R~~	←—	~~←R~~	~~←R~~
81,82	R	R	R	R	R	G	R	G	R
P21,P22	DW	DW	W	W	DW	DW	DW	DW	DRK
P41,P42	DW	DW	DW	DW	DW	DW	W	W	DRK

8 Phase
Fully Actuated
(Wilmington Signal System)

1. Refer to "Roadway Standard Drawings NCDOT" dated January 2018, "Standard Specifications for Roads and Structures" dated January 2018.
2. Do not program signal for late night flashing operation unless otherwise directed by the Engineer.
3. Phase 1 and/or phase 5 may be lagged.
4. Phase 3 and/or phase 7 may be lagged.
5. Reposition existing signal heads numbered 41, 42 and 81.
6. Set all detector units to presence mode.
7. Omit "WALK" and flashing "DON'T WALK" with no pedestrian calls.
8. Program the pedestrian heads to countdown the flashing "DON'T WALK" time only.
9. The Division Traffic Engineer will determine the hours of use for each phasing plan.
10. Maximum times shown in timing chart are for free-run operation only. Coordinated signal system timing values supersede these values.
11. Relabel existing loops 8A as 3A and 1B as 8A.
12. Incorporate Microwave Detection system for vehicle detection.
13. Provide the Engineer with the Manufacturer's approved Microwave Detection locations and mounting heights to obtain detection zones as shown.
14. Signal system data:
    Controller Asset #0752.
15. Refer to pavement marking plans for stop bar and crosswalk locations.
16. Type II pedestals shall be black powder-coated.

ALTERNATE PHASING DIAGRAM

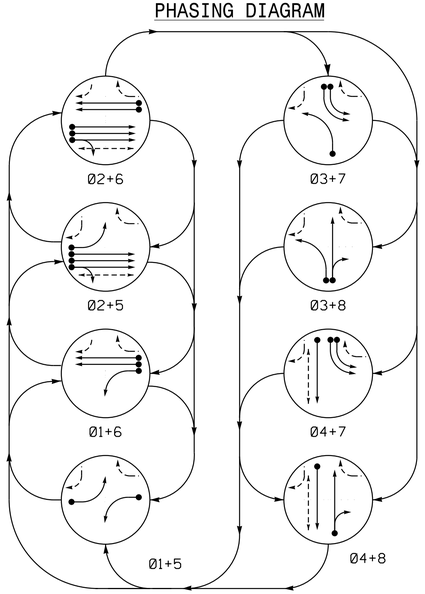

PHASING DIAGRAM DETECTION LEGEND

- DETECTED MOVEMENT
- UNDETECTED MOVEMENT (OVERLAP)
- UNSIGNALIZED MOVEMENT
- PEDESTRIAN MOVEMENT

ALTERNATE PHASING TABLE OF OPERATION

SIGNAL FACE	PHASE 01+5	01+6	02+5	02+6	03+7	03+8	04+7	04+8	FLASH
11	←—	←—	~~←R~~	~~←R~~	~~←R~~	~~←R~~	~~←R~~	~~←R~~	~~←Y~~
21,22,23	R	R	G	G	R	R	R	R	Y
31	~~←R~~	~~←R~~	~~←R~~	~~←R~~	←—	←—	~~←R~~	~~←R~~	~~←R~~
41,42	R	R	R	R	R	R	G	G	R
51	←—	~~←R~~	←—	~~←R~~	~~←R~~	~~←R~~	~~←R~~	~~←R~~	~~←Y~~
61,62	R	G	R	G	R	R	R	R	Y
71,72	~~←R~~	~~←R~~	~~←R~~	~~←R~~	←—	~~←R~~	←—	~~←R~~	~~←R~~
81,82	R	R	R	R	R	G	R	G	R
P21,P22	DW	DW	W	W	DW	DW	DW	DW	DRK
P41,P42	DW	DW	DW	DW	DW	DW	W	W	DRK

11/25/2019
...404-Design\03-0752_sig2.dgn
User:jsiff

Signal Upgrade - Final Design
Sheet 2 of 2

DOCUMENT NOT CONSIDERED FINAL UNLESS ALL SIGNATURES COMPLETED

Prepared in the offices of:
RAMEY KEMP & ASSOCIATES, INC.
Transportation Engineers
5808 Faringdon Place, Suite 100
Raleigh, North Carolina 27609
919-872-5115 Tel. 919-878-5416 Fax.
www.rameykemp.com, NC License No. C-0910

Prepared for:
Transportation Mobility and Safety Division
Signal Design Section
750 N.Greenfield Pkwy.Garner,NC 27529

US 17 (Military Cutoff Road)
at
Drysdale Drive

Division 3 New Hanover County Wilmington

PLAN DATE: November 2019 REVIEWED BY: WJ Hamilton
PREPARED BY: A. Andrews RKA PROJ. NO.: 19258 (040)

SCALE 0 40 1"=40'

REVISIONS	INIT.	DATE

SEAL
NORTH CAROLINA PROFESSIONAL SEAL 32396 ENGINEER WILLIAM J. HAMILTON

DocuSigned by: William J. Hamilton A06600A0A4B4B4E...
SIGNATURE 11/25/19 DATE

SIG. INVENTORY NO. 03-0752

DocuSign Envelope ID: 8BEE47C3-CECA-4717-8B72-8C77D2788807

EDI MODEL 2018ECLip-NC CONFLICT MONITOR PROGRAMMING DETAIL

(remove jumpers and set switches as shown)

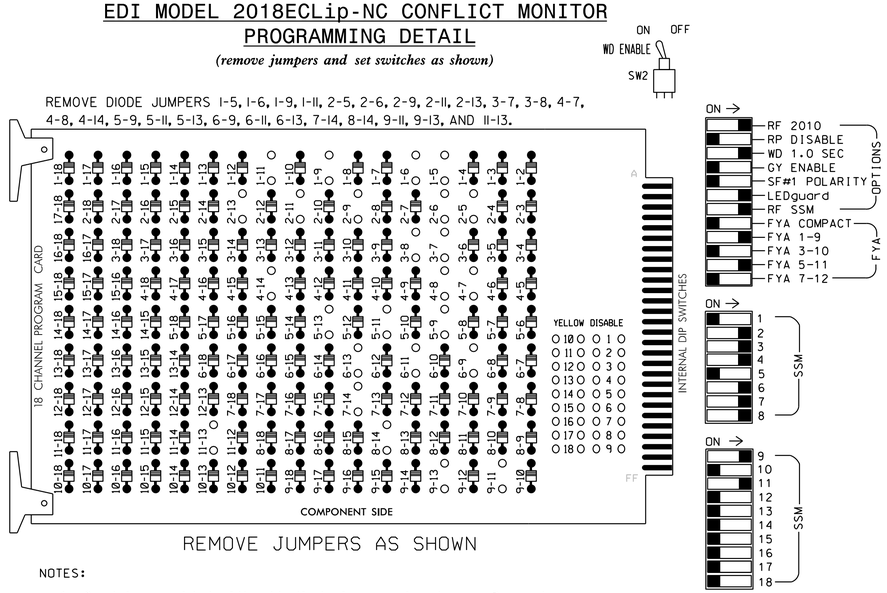

REMOVE JUMPERS AS SHOWN

NOTES:

1. Card is provided with all diode jumpers in place. Removal of any jumper allows its channels to run concurrently.
2. Ensure jumpers SEL2-SEL5 and SEL9 are present on the monitor board.
3. Ensure that Red Enable is active at all times during normal operation.
4. Integrate monitor with Ethernet network in cabinet.

■ = DENOTES POSITION OF SWITCH

INPUT FILE POSITION LAYOUT

(front view)

		1	2	3	4	5	6	7	8	9	10	11	12	13	14
FILE "I"	U	ø1 1A	ø2 2A	ø2 2C	WIRED INPUT ⊗	SLOT EMPTY	ø4 4A	SLOT EMPTY	SLOT EMPTY	SLOT EMPTY	SLOT EMPTY	SLOT EMPTY	ø2 PED DC ISOLATOR	SLOT EMPTY	FS DC ISOLATOR
	L	NOT USED	ø2 2B	NOT USED			NOT USED						ø4 PED DC ISOLATOR		ST DC ISOLATOR
FILE "J"	U	ø5 5A	ø6 6A	SLOT EMPTY	WIRED INPUT ⊗	ø7 7A	ø7 7B	SLOT EMPTY	SLOT EMPTY	SLOT EMPTY	SLOT EMPTY	SLOT EMPTY	SLOT EMPTY	SLOT EMPTY	SLOT EMPTY
	L	NOT USED	ø6 6B			NOT USED	NOT USED								

EX.: 1A, 2A, ETC. = LOOP NO.'S

⊗ Wired Input - Do not populate slot with detector card

FS = FLASH SENSE
ST = STOP TIME

SPECIAL DETECTOR NOTE

For detector zones 3A and 8A, install a microwave detection system for vehicle detection. Perform installation according to the manufacturer's directions and NCDOT engineer approved mounting locations to accomplish the detection schemes shown on the Signal Design Plans.

LOAD RESISTOR INSTALLATION DETAIL

(install resistors as shown below)

ACCEPTABLE VALUES	
VALUE (ohms)	WATTAGE
1.5K - 1.9K	25W (min)
2.0K - 3.0K	10W (min)

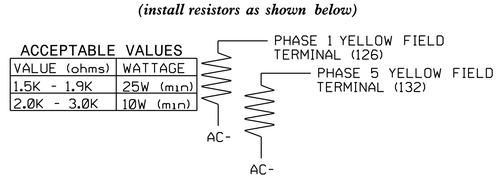

NOTES

1. To prevent "flash-conflict" problems, insert red flash program blocks for all unused vehicle load switches in the output file. The installer shall verify that signal heads flash in accordance with the Signal Plans.
2. Enable Simultaneous Gap-Out for all phases.
3. Program phases 2 and 6 for Variable Initial and Gap Reduction.
4. Program phases 2 and 6 for Startup In Green.
5. Program phase 2 and 4 for Startup Ped Call.
6. Program phases 2 and 6 for Yellow Flash and overlap 1 as Wag Overlaps.
7. The cabinet and controller are part of the Wilmington Signal System.

EQUIPMENT INFORMATION

CONTROLLER.....2070E
CABINET.....332 /W/ AUX
SOFTWARE.....ECONOLITE OASIS
CABINET MOUNT.....BASE
OUTPUT FILE POSITIONS...18 WITH AUX. OUTPUT FILE
LOAD SWITCHES USED.....S1,S2,S3,S4,S5,S6,S7,S8,S10,S11, AUX S1,AUX S4
PHASES USED.....1,2,2PED,3,4,4PED,5,6,7,8
OVERLAP "A".....1+2
OVERLAP "B".....NOT USED
OVERLAP "C".....5+6
OVERLAP "D".....NOT USED

INPUT FILE CONNECTION & PROGRAMMING CHART

LOOP NO.	LOOP TERMINAL	INPUT FILE POS.	PIN NO.	INPUT ASSIGNMENT NO.	DETECTOR NO.	NEMA PHASE	CALL	EXTEND	FULL TIME DELAY	STRETCH TIME	DELAY TIME
1A[1]	TB2-1,2	I1U	56	18	1	1	Y	Y			10
	-	J4U	48	10 ★	26	6	Y	Y	Y		3
	-	I1U	56	18 ★	51	1	Y	Y			
2A	TB2-5,6	I2U	39	1	2	2	Y	Y			
2B	TB2-7,8	I2L	43	5	12	2	Y	Y			
2C	TB2-9,10	I3U	63	25	32	2	Y	Y			
4A	TB4-9,10	I6U	41	3	4	4	Y	Y			
5A[2]	TB3-1,2	J1U	55	17	5	5	Y	Y			10
	-	I4U	47	9 ★	22	2	Y	Y	Y		3
	-	J1U	55	17 ★	55	5	Y	Y			3
6A	TB3-5,6	J2U	40	2	6	6	Y	Y			
6B	TB3-7,8	J2L	44	6	16	6	Y	Y			
7A	TB5-5,6	J5U	57	19	7	7	Y	Y			3
7B	TB5-9,10	J6U	42	4	8	7	Y	Y			
PED PUSH BUTTONS											
P21,P22	TB8-4,6	I12U	67	29	PED 2	2 PED					
P41,P42	TB8-5,6	I12L	69	31	PED 4	4 PED					

NOTE:
INSTALL DC ISOLATORS IN INPUT FILE SLOT I12.

[1] Add jumper from I1-W to J4-W, on rear of input file.
[2] Add jumper from J1-W to I4-W, on rear of input file.
★ See Input Page Assignment programming details on sheets 3 and 4.

INPUT FILE POSITION LEGEND: J2L
FILE J
SLOT 2
LOWER

Prepared in the offices of:
RAMEY KEMP & ASSOCIATES, INC.
Transportation Engineers
5808 Faringdon Place, Suite 100
Raleigh, North Carolina 27609
919-872-5115 Tel. 919-878-5416 Fax.
www.rameykemp.com, NC License No. C-0910

PROJECT REFERENCE NO.	SHEET NO.
U-5710A	Sig-2.5

SIGNAL HEAD HOOK-UP CHART

LOAD SWITCH NO.	S1	S2	S3	S4	S5	S6	S7	S8	S9	S10	S11	S12	AUX S1	AUX S2	AUX S3	AUX S4	AUX S5	AUX S6
CMU CHANNEL NO.	1	2	13	3	4	14	5	6	15	7	8	16	9	10	17	11	12	18
PHASE	1	2	2 PED	3	4	4 PED	5	6	6 PED	7	8	8 PED	OLA	OLB	SPARE	OLC	OLD	SPARE
SIGNAL HEAD NO.	11 ★	21,22, 23	P21, P22	31	41,42	P41, P42	51 ★	61,62	NU	71,72	81,82	NU	11 ★	NU	NU	51 ★	NU	NU
RED		128			101			134			107							
YELLOW	✳	129			102		✳	135			108							
GREEN		130			103			136			109							
RED ARROW				116						122			A121			A114		
YELLOW ARROW				117						123			A122			A115		
FLASHING YELLOW ARROW													A123			A116		
GREEN ARROW	127			118			133			124								
✋			113			104												
🚶			115			106												

NU = Not Used
✳ Denotes install load resistor. See load resistor installation detail this sheet.
★ See pictorial of head wiring in detail below.

COUNTDOWN PEDESTRIAN SIGNAL OPERATION

Countdown Ped Signals are required to display timing only during Ped Clearance Interval. Consult Ped Signal Module user's manual for instructions on selecting this feature.

FYA SIGNAL WIRING DETAIL

(wire signal heads as shown)

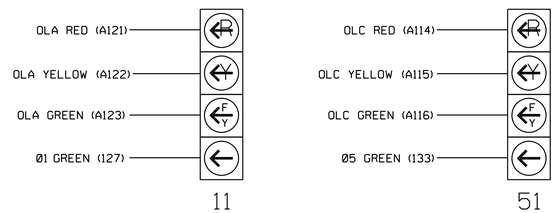

NOTE

1. The sequence display for signal heads 11 and 51 requires special programming. See sheet 2 for programming instructions.

THIS ELECTRICAL DETAIL IS FOR
THE SIGNAL DESIGN: 03-0752
DESIGNED: Nov 2019
SEALED: 11-25-2019
REVISED: N/A

Electrical Detail - Final Design
Sheet 1 of 5

DOCUMENT NOT CONSIDERED FINAL UNLESS ALL SIGNATURES COMPLETED

ELECTRICAL AND PROGRAMMING DETAILS FOR:

NC Department of Transportation Mobility and Safety Division Traffic Engineering Branch Signals Management Section
750 N.Greenfield Pkwy.Garner.NC 27529

US 17 (Military Cutoff Road) at Drysdale Drive

Division 3 New Hanover County Wilmington

PLAN DATE:	November 2019	REVIEWED BY:	WJ Hamilton
PREPARED BY:	A. Andrews	RKA PROJ. NO.:	19258 (040)

REVISIONS	INIT.	DATE

SEAL
NORTH CAROLINA PROFESSIONAL SEAL 32396 ENGINEER WILLIAM J. HAMILTON
DocuSigned by: William J. Hamilton A06600706E6E4B5... SIGNATURE 11/25/19 DATE
SIG. INVENTORY NO. 03-0752

11/25/2019
A:\Projects\Sig\03-0752_ele.dgn
User:ltaff

DocuSign Envelope ID: 8BEE47C3-CECA-4717-8B72-8C77D2788807

PROJECT REFERENCE NO.	SHEET NO.
U-5710A	Sig-2.6

LOGICAL I/O PROCESSOR PROGRAMMING DETAIL
TO PRODUCE SPECIAL FYA-PPLT SIGNAL SEQUENCE

(program controller as shown below)

1. FROM MAIN MENU PRESS '2' (PHASE CONTROL), THEN '1' (PHASE CONTROL FUNCTIONS). SCROLL TO THE BOTTOM OF THE MENU AND ENABLE ACT LOGIC COMMANDS 1, 2, 3, 4, 5 AND 6.

2. FROM MAIN MENU PRESS '6' (OUTPUTS), THEN '3' (LOGICAL I/O PROCESSOR).

```
LOGICAL I/O COMMAND #1  (+/-COMMAND#)
IF  ACTIVE PHASE      #1  IS ON
AND RED CLEAR ON PHASE #1  IS ON

          SCROLL DOWN

THEN:
SET OUTPUT  ASSIGNMENT #50 ON
SET OUTPUT  ASSIGNMENT #51 OFF
```

NOTE: LOGIC FOR PHASE 1 RED CLEAR WHEN TRANSITIONING FROM PHASE 1 TO PHASE 2 (HEAD 11).

PRESS '+'

```
LOGICAL I/O COMMAND #2  (+/-COMMAND#)
IF  ACTIVE PHASE      #1  IS ON

          SCROLL DOWN

THEN:
SET OUTPUT  ASSIGNMENT #52 OFF
```

NOTE: LOGIC FOR SWITCHING FLASHING YELLOW ARROW "OFF" DURING PHASE 1 (HEAD 11).

PRESS '+'

```
LOGICAL I/O COMMAND #3  (+/-COMMAND#)
IF  YELLOW ON PHASE    #1  IS ON

          SCROLL DOWN

THEN:
SET OUTPUT  ASSIGNMENT #51 ON
```

NOTE: LOGIC FOR YELLOW ARROW CLEARANCE FROM PHASE 1 (HEAD 11).

PRESS '+'

```
LOGICAL I/O COMMAND #4  (+/-COMMAND#)
IF  ACTIVE PHASE      #5  IS ON
AND RED CLEAR ON PHASE #5  IS ON

          SCROLL DOWN

THEN:
SET OUTPUT  ASSIGNMENT #42 ON
SET OUTPUT  ASSIGNMENT #43 OFF
```

NOTE: LOGIC FOR PHASE 5 RED CLEAR WHEN TRANSITIONING FROM PHASE 5 TO PHASE 6 (HEAD 51).

PRESS '+'

```
LOGICAL I/O COMMAND #5  (+/-COMMAND#)
IF  ACTIVE PHASE      #5  IS ON

          SCROLL DOWN

THEN:
SET OUTPUT  ASSIGNMENT #44 OFF
```

NOTE: LOGIC FOR SWITCHING FLASHING YELLOW ARROW "OFF" DURING PHASE 5 (HEAD 51).

PRESS '+'

```
LOGICAL I/O COMMAND #6  (+/-COMMAND#)
IF  YELLOW ON PHASE    #5  IS ON

          SCROLL DOWN

THEN:
SET OUTPUT  ASSIGNMENT #43 ON
```

NOTE: LOGIC FOR YELLOW ARROW CLEARANCE FROM PHASE 5 (HEAD 51).

LOGIC I/O PROCESSOR PROGRAMMING COMPLETE

OUTPUT REFERENCE SCHEDULE

OUTPUT 42 = Overlap C Red
OUTPUT 43 = Overlap C Yellow
OUTPUT 44 = Overlap C Green
OUTPUT 50 = Overlap A Red
OUTPUT 51 = Overlap A Yellow
OUTPUT 52 = Overlap A Green

OVERLAP PROGRAMMING DETAIL FOR DEFAULT PHASING

(program controller as shown below)

FROM MAIN MENU PRESS '8' (OVERLAPS), THEN '1' (VEHICLE OVERLAP SETTINGS).

```
PAGE 1: VEHICLE OVERLAP 'A' SETTINGS
 PHASE:          |1234567891011211314151 6
VEH OVL PARENTS: |XX
VEH OVL NOT VEH: |
VEH OVL NOT PED: |
VEH OVL GRN EXT: |
STARTUP COLOR: _ RED  _ YELLOW  _ GREEN
FLASH COLORS:  _ RED  _ YELLOW  X GREEN
SELECT VEHICLE OVERLAP OPTIONS:   (Y/N)
FLASH YELLOW IN CONTROLLER FLASH?...Y
GREEN EXTENSION (0-255 SEC).........0
YELLOW CLEAR (0=PARENT,3-25.5 SEC)..0.0
RED CLEAR (0=PARENT,0.1-25.5 SEC)...0.0
OUTPUT AS PHASE # (0=NONE, 1-16)....0
```

← NOTICE GREEN FLASH

PRESS '+' TWICE

```
PAGE 1: VEHICLE OVERLAP 'C' SETTINGS
 PHASE:          |1234567891011211314151 6
VEH OVL PARENTS: |    XX
VEH OVL NOT VEH: |
VEH OVL NOT PED: |
VEH OVL GRN EXT: |
STARTUP COLOR: _ RED  _ YELLOW  _ GREEN
FLASH COLORS:  _ RED  _ YELLOW  X GREEN
SELECT VEHICLE OVERLAP OPTIONS:   (Y/N)
FLASH YELLOW IN CONTROLLER FLASH?...Y
GREEN EXTENSION (0-255 SEC).........0
YELLOW CLEAR (0=PARENT,3-25.5 SEC)..0.0
RED CLEAR (0=PARENT,0.1-25.5 SEC)...0.0
OUTPUT AS PHASE # (0=NONE, 1-16)....0
```

← NOTICE GREEN FLASH

OVERLAP PROGRAMMING COMPLETE

OVERLAP PROGRAMMING DETAIL FOR ALTERNATE PHASING

(program controller as shown below)

FROM MAIN MENU PRESS '8' (OVERLAPS), THEN '1' (VEHICLE OVERLAP SETTINGS). PRESS 'NEXT' TO ADVANCE TO PAGE 2.

NOTICE PAGE 2 →

```
PAGE 2: VEHICLE OVERLAP 'A' SETTINGS
 PHASE:          |1234567891011211314151 6
VEH OVL PARENTS: |X
VEH OVL NOT VEH: |
VEH OVL NOT PED: |
VEH OVL GRN EXT: |
STARTUP COLOR: _ RED  _ YELLOW  _ GREEN
FLASH COLORS:  _ RED  _ YELLOW  _ GREEN
SELECT VEHICLE OVERLAP OPTIONS:   (Y/N)
FLASH YELLOW IN CONTROLLER FLASH?...Y
GREEN EXTENSION (0-255 SEC).........0
YELLOW CLEAR (0=PARENT,3-25.5 SEC)..0.0
RED CLEAR (0=PARENT,0.1-25.5 SEC)...0.0
OUTPUT AS PHASE # (0=NONE, 1-16)....0
```

PRESS '+' TWICE

NOTICE PAGE 2 →

```
PAGE 2: VEHICLE OVERLAP 'C' SETTINGS
 PHASE:          |1234567891011211314151 6
VEH OVL PARENTS: |    X
VEH OVL NOT VEH: |
VEH OVL NOT PED: |
VEH OVL GRN EXT: |
STARTUP COLOR: _ RED  _ YELLOW  _ GREEN
FLASH COLORS:  _ RED  _ YELLOW  _ GREEN
SELECT VEHICLE OVERLAP OPTIONS:   (Y/N)
FLASH YELLOW IN CONTROLLER FLASH?...Y
GREEN EXTENSION (0-255 SEC).........0
YELLOW CLEAR (0=PARENT,3-25.5 SEC)..0.0
RED CLEAR (0=PARENT,0.1-25.5 SEC)...0.0
OUTPUT AS PHASE # (0=NONE, 1-16)....0
```

OVERLAP PROGRAMMING COMPLETE

THIS ELECTRICAL DETAIL IS FOR THE SIGNAL DESIGN: 03-0752
DESIGNED: Nov 2019
SEALED: 11-25-2019
REVISED: N/A

Prepared in the offices of:

RAMEY KEMP & ASSOCIATES, INC.
Transportation Engineers
5808 Farlngdon Place, Sulte 100
Raleigh, North Carolina 27609
919-872-5115 Tel. 919-878-5416 Fax.
www.rameykemp.com

Electrical Detail - Final Design
Sheet 2 of 5

DOCUMENT NOT CONSIDERED FINAL UNLESS ALL SIGNATURES COMPLETED

ELECTRICAL AND PROGRAMMING DETAILS FOR:

NCDOT Transportation Mobility and Safety Division — Traffic Engineering Branch — Signal Management Section

750 N.Greenfield Pkwy.Garner,NC 27529

US 17 (Military Cutoff Road)
at
Drysdale Drive

Division 3 New Hanover County Wilmington

PLAN DATE:	November 2019	REVIEWED BY:	WJ Hamilton
PREPARED BY:	A. Andrews	RKA PROJ. NO.:	19258 (040)

REVISIONS	INIT.	DATE

SEAL
NORTH CAROLINA PROFESSIONAL SEAL 32396 ENGINEER WILLIAM J. HAMILTON

DocuSigned by: William J. Hamilton
A0660070A6A6484...
SIGNATURE 11/25/19 DATE

SIG. INVENTORY NO. 03-0752

11/25/2019
J:\projects\2019\19258\sig\03-0752_det02.dgn
mkelley
User:lastf

DocuSign Envelope ID: 8BEE47C3-CECA-4717-8B72-8C77D2788807

DocuSign Envelope ID: 8BEE47C3-CECA-4717-8B72-8C77D2788807

PROJECT REFERENCE NO.	SHEET NO.
U-5710A	Sig-2.7

INPUT PAGE 2 ASSIGNMENT PROGRAMMING DETAIL FOR ALTERNATE PHASING - LOOP 1A

(program controller as shown below)

NOTES: 1. THIS PROGRAMMING APPLIES FOR INPUT PAGE 2 ONLY. INPUT PAGE 1 WILL USE STANDARD DEFAULT SETTINGS. THIS PROGRAMMING IS NECESSARY FOR PROPER DETECTOR OPERATION DURING ALTERNATE PHASING OPERATION.

2. THE FIRST TASK THIS PROGRAMMING ACCOMPLISHES IS THE DISABLING OF INPUT #10 (DETECTOR 26) SO THAT A VEHICLE CALL WILL NOT BE PLACED TO PHASE 6 DURING ALTERNATE PHASING OPERATION. THE SECOND TASK THIS PROGRAMMING ACCOMPLISHES IS THAT IT REASSIGNS DETECTOR 51 TO INPUT #18 SO THAT THE DELAY ON LOOP 1A CAN BE REDUCED FROM 10 SECONDS TO 0 SECONDS.

FROM MAIN MENU PRESS '5' (INPUTS), THEN PRESS 'NEXT' TO GET TO INPUT PAGE '2'. PRESS THE '+' KEY UNTIL INPUT 10 IS REACHED.

```
PAGE: 2 C1 PIN:48  VEHICLE DETECTOR
INPUT ASSIGNMENT #.................10
DEBOUNCE TIME (0-25.5 SEC).........0.5
DELAY TIME (0-25.5 SEC).............0.0
HOLD-OVER TIME (0-25.5 SEC).........0.0
ASSIGNMENT SELECTION:
NOT ENABLED (Y/N)..................Y
VEHICLE DETECTOR (1-64).............26
PEDESTRIAN DETECTOR (1-16).........._
ALTERNATE PED DETECTOR (1-16)......._
PREEMPT (1-10)......................._
INVERTED PREEMPT (1-10).............._
STOP TIME (Y/N)......................_
FLASH SENSE (Y/N)...................._
DOOR OPEN (Y/N)......................_
MANUAL CONTROL ENABLE (Y/N).........._
MANUAL CONTROL ADVANCE (Y/N)........._
SPECIAL FUNCTION ALARM (1-8)........._
TOD HOUR SYCHRONIZATION (0-23)......._
FORCE OFF RING (1-4)................._
HOLD PHASES (1-16)..................._
PLAN (65=FLSH,66=FREE)..._  OFFSET#.._
CHANGE PHASE SEQUENCE PAGE (1-12)...._
CHANGE PHASE TIMING PAGE (1-4)......._
CHANGE PHASE CONTROL PAGE (1-4)......_
CHANGE OVERLAP CONTROL PAGE (1-4)...._
CHANGE INPUT PAGE (1-4).............._
CHANGE OUTPUT PAGE (1-4)............._
OVERRIDE PHASE CONTROL FUNCTION (Y)._
```

→ ENTER A 'Y' FOR NOT ENABLED →

DEFAULT DETECTOR NUMBER WILL REMAIN UNTIL 'NOT ENABLED' IS ENTERED.

(LOOP 1A - PHASE 6)

```
PAGE: 2 C1 PIN:48  NOT ENABLED
INPUT ASSIGNMENT #.................10
DEBOUNCE TIME (0-25.5 SEC).........0.5
DELAY TIME (0-25.5 SEC).............0.0
HOLD-OVER TIME (0-25.5 SEC).........0.0
ASSIGNMENT SELECTION:
NOT ENABLED (Y/N)..................Y
VEHICLE DETECTOR (1-64).............._
PEDESTRIAN DETECTOR (1-16).........._
ALTERNATE PED DETECTOR (1-16)......._
PREEMPT (1-10)......................._
INVERTED PREEMPT (1-10).............._
STOP TIME (Y/N)......................_
FLASH SENSE (Y/N)...................._
DOOR OPEN (Y/N)......................_
MANUAL CONTROL ENABLE (Y/N).........._
MANUAL CONTROL ADVANCE (Y/N)........._
SPECIAL FUNCTION ALARM (1-8)........._
TOD HOUR SYCHRONIZATION (0-23)......._
FORCE OFF RING (1-4)................._
HOLD PHASES (1-16)..................._
PLAN (65=FLSH,66=FREE)..._  OFFSET#.._
CHANGE PHASE SEQUENCE PAGE (1-12)...._
CHANGE PHASE TIMING PAGE (1-4)......._
CHANGE PHASE CONTROL PAGE (1-4)......_
CHANGE OVERLAP CONTROL PAGE (1-4)...._
CHANGE INPUT PAGE (1-4).............._
CHANGE OUTPUT PAGE (1-4)............._
OVERRIDE PHASE CONTROL FUNCTION (Y)._
```

PRESS '+' TO ADVANCE TO INPUT 18

```
PAGE: 2 C1 PIN:56  VEHICLE DETECTOR
INPUT ASSIGNMENT #.................18
DEBOUNCE TIME (0-25.5 SEC).........0.5
DELAY TIME (0-25.5 SEC).............0.0
HOLD-OVER TIME (0-25.5 SEC).........0.0
ASSIGNMENT SELECTION:
NOT ENABLED (Y/N)..................._
VEHICLE DETECTOR (1-64).............1
PEDESTRIAN DETECTOR (1-16).........._
ALTERNATE PED DETECTOR (1-16)......._
PREEMPT (1-10)......................._
INVERTED PREEMPT (1-10).............._
STOP TIME (Y/N)......................_
FLASH SENSE (Y/N)...................._
DOOR OPEN (Y/N)......................_
MANUAL CONTROL ENABLE (Y/N).........._
MANUAL CONTROL ADVANCE (Y/N)........._
SPECIAL FUNCTION ALARM (1-8)........._
TOD HOUR SYCHRONIZATION (0-23)......._
FORCE OFF RING (1-4)................._
HOLD PHASES (1-16)..................._
PLAN (65=FLSH,66=FREE)..._  OFFSET#.._
CHANGE PHASE SEQUENCE PAGE (1-12)...._
CHANGE PHASE TIMING PAGE (1-4)......._
CHANGE PHASE CONTROL PAGE (1-4)......_
CHANGE OVERLAP CONTROL PAGE (1-4)...._
CHANGE INPUT PAGE (1-4).............._
CHANGE OUTPUT PAGE (1-4)............._
OVERRIDE PHASE CONTROL FUNCTION (Y)._
```

→ ENTER '51' TO REASSIGN THE VEHICLE DETECTOR FOR THIS INPUT →

(LOOP 1A - PHASE 1)

```
PAGE: 2 C1 PIN:56  VEHICLE DETECTOR
INPUT ASSIGNMENT #.................18
DEBOUNCE TIME (0-25.5 SEC).........0.5
DELAY TIME (0-25.5 SEC).............0.0
HOLD-OVER TIME (0-25.5 SEC).........0.0
ASSIGNMENT SELECTION:
NOT ENABLED (Y/N)..................._
VEHICLE DETECTOR (1-64).............51
PEDESTRIAN DETECTOR (1-16).........._
ALTERNATE PED DETECTOR (1-16)......._
PREEMPT (1-10)......................._
INVERTED PREEMPT (1-10).............._
STOP TIME (Y/N)......................_
FLASH SENSE (Y/N)...................._
DOOR OPEN (Y/N)......................_
MANUAL CONTROL ENABLE (Y/N).........._
MANUAL CONTROL ADVANCE (Y/N)........._
SPECIAL FUNCTION ALARM (1-8)........._
TOD HOUR SYCHRONIZATION (0-23)......._
FORCE OFF RING (1-4)................._
HOLD PHASES (1-16)..................._
PLAN (65=FLSH,66=FREE)..._  OFFSET#.._
CHANGE PHASE SEQUENCE PAGE (1-12)...._
CHANGE PHASE TIMING PAGE (1-4)......._
CHANGE PHASE CONTROL PAGE (1-4)......_
CHANGE OVERLAP CONTROL PAGE (1-4)...._
CHANGE INPUT PAGE (1-4).............._
CHANGE OUTPUT PAGE (1-4)............._
OVERRIDE PHASE CONTROL FUNCTION (Y)._
```

PROGRAMMING COMPLETE

SPECIAL DETECTOR PROGRAMMING DETAIL - LOOP 1A (ALT.)

(program controller as shown below)

FROM MAIN MENU PRESS '7' (DETECTORS), THEN PRESS '1' FOR VEHICLE DETECTORS. PRESS THE '-' KEY TO GET TO VEHICLE DETECTOR #51.

```
VEHICLE DETECTOR #51  SETTINGS (+-,1-64)
SETTING:                          (Y/N)
ENABLE DETECTOR.....................N
ENABLE LOGGING......................N
ENABLE DIAGNOSTICS..................N
SPEED TRAP..........................N
CALL DETECTOR.......................Y
EXTENSION DETECTOR..................Y
MODE 2 STOP BAR.....................N
SWITCHING DETECTOR..................N
DUPLICATING DETECTOR................N
ENABLE FULL TIME DELAY..............N
IF FAILED, SET MIN RECALL?..........N
IF FAILED, SET MAX1 RECALL?.........N
IF FAILED, SET MAX2 RECALL?.........N
PHASE#          ¦12345678910111213141516
PHASES ASSIGNED ¦
SWITCH/DUPLICATE¦
LOOP SIZE (0-255 FT).................6
SPEED TRAP DISTANCE (0-255 FT)......0
STOP BAR TIME (0-255 SEC)...........0
STRETCH (0-25.5 SEC)................0.0
DELAY (0-255 SEC)...................0
MAX CALLS/MIN (0-255)..............255
MIN CALLS/DIAGNOSTIC PERIOD (0-255).0
MAX OCCUPANCY (0-100%).............100
EXTENSION DISABLE TIME (0-255 SEC)..0
QUEUE MAX OCCUPANCY TIME (0-255)....0
QUEUE GAP RESET TIME (0-25.5).......0.0
PREEMPTION INDEX FOR QUEUE (0-10)...0
```

→ ENTER 'Y' FOR ENABLE DETECTOR →

→ ENTER '1' FOR PHASES ASSIGNED →

→ ENSURE DELAY IS '0' →

```
VEHICLE DETECTOR #51  SETTINGS (+-,1-64)
SETTING:                          (Y/N)
ENABLE DETECTOR.....................Y
ENABLE LOGGING......................N
ENABLE DIAGNOSTICS..................N
SPEED TRAP..........................N
CALL DETECTOR.......................Y
EXTENSION DETECTOR..................Y
MODE 2 STOP BAR.....................N
SWITCHING DETECTOR..................N
DUPLICATING DETECTOR................N
ENABLE FULL TIME DELAY..............N
IF FAILED, SET MIN RECALL?..........N
IF FAILED, SET MAX1 RECALL?.........N
IF FAILED, SET MAX2 RECALL?.........N
PHASE#          ¦12345678910111213141516
PHASES ASSIGNED ¦X
SWITCH/DUPLICATE¦
LOOP SIZE (0-255 FT).................6
SPEED TRAP DISTANCE (0-255 FT)......0
STOP BAR TIME (0-255 SEC)...........0
STRETCH (0-25.5 SEC)................0.0
DELAY (0-255 SEC)...................0
MAX CALLS/MIN (0-255)..............255
MIN CALLS/DIAGNOSTIC PERIOD (0-255).0
MAX OCCUPANCY (0-100%).............100
EXTENSION DISABLE TIME (0-255 SEC)..0
QUEUE MAX OCCUPANCY TIME (0-255)....0
QUEUE GAP RESET TIME (0-25.5).......0.0
PREEMPTION INDEX FOR QUEUE (0-10)...0
```

DETECTOR PROGRAMMING COMPLETE

NOTE: DETECTOR IS PROGRAMMED PER THE INPUT FILE CONNECTION AND PROGRAMMING CHART SHOWN ON SHEET 1.

THIS ELECTRICAL DETAIL IS FOR
THE SIGNAL DESIGN: 03-0752
DESIGNED: Nov 2019
SEALED: 11-25-2019
REVISED: N/A

Electrical Detail - Final Design
Sheet 3 of 5

DOCUMENT NOT CONSIDERED FINAL UNLESS ALL SIGNATURES COMPLETED

Prepared in the offices of:
RAMEY KEMP & ASSOCIATES, INC.
Transportation Engineers
5808 Faringdon Place, Suite 100
Raleigh, North Carolina 27609
919-872-5115 Tel. 919-878-5416 Fax.
www.rameykemp.com, NC License No. C-0910

ELECTRICAL AND PROGRAMMING DETAILS FOR:

NC Department of Transportation Mobility and Safety Division Traffic Engineering Branch Signals Management Section
750 N.Greenfield Pkwy,Garner,NC 27529

US 17 (Military Cutoff Road)
at
Drysdale Drive

Division 3 New Hanover County Wilmington

PLAN DATE:	November 2019	REVIEWED BY:	WJ Hamilton
PREPARED BY:	A. Andrews	RKA PROJ. NO:	19258 (040)

REVISIONS	INIT.	DATE

SEAL
NORTH CAROLINA PROFESSIONAL SEAL 32396 ENGINEER WILLIAM J. HAMILTON
Digitally signed by William J. Hamilton
SIGNATURE 11/25/19 DATE

SIG. INVENTORY NO. 03-0752

11/25/2019
K:\Projects\Sign\03-0752.ele3.dgn
User:istiff

DocuSign Envelope ID: 8BEE47C3-CECA-4717-8B72-8C77D2788807

PROJECT REFERENCE NO.	SHEET NO.
U-5710A	Sig-2.8

INPUT PAGE 2 ASSIGNMENT PROGRAMMING DETAIL FOR ALTERNATE PHASING - LOOP 5A

(program controller as shown below)

NOTES: 1. THIS PROGRAMMING APPLIES FOR INPUT PAGE 2 ONLY. INPUT PAGE 1 WILL USE STANDARD DEFAULT SETTINGS. THIS PROGRAMMING IS NECESSARY FOR PROPER DETECTOR OPERATION DURING ALTERNATE PHASING OPERATION.

2. THE FIRST TASK THIS PROGRAMMING ACCOMPLISHES IS THE DISABLING OF INPUT #9 (DETECTOR 22) SO THAT A VEHICLE CALL WILL NOT BE PLACED TO PHASE 2 DURING ALTERNATE PHASING OPERATION. THE SECOND TASK THIS PROGRAMMING ACCOMPLISHES IS THAT IT REASSIGNS DETECTOR 55 TO INPUT #17 SO THAT THE DELAY ON LOOP 5A CAN BE REDUCED FROM 10 SECONDS TO 3 SECONDS.

FROM MAIN MENU PRESS '5' (INPUTS), THEN PRESS 'NEXT' TO GET TO INPUT PAGE '2'. PRESS THE '+' KEY UNTIL INPUT 9 IS REACHED.

```
PAGE: 2 C1 PIN:47  VEHICLE DETECTOR
INPUT ASSIGNMENT #.................9
DEBOUNCE TIME (0-25.5 SEC).........0.5
DELAY TIME (0-25.5 SEC).............0.0
HOLD-OVER TIME (0-25.5 SEC).........0.0
ASSIGNMENT SELECTION:
NOT ENABLED (Y/N)...................Y
VEHICLE DETECTOR (1-64).............22
PEDESTRIAN DETECTOR (1-16).........._
ALTERNATE PED DETECTOR (1-16)......._
PREEMPT (1-10)......................._
INVERTED PREEMPT (1-10).............._
STOP TIME (Y/N)......................_
FLASH SENSE (Y/N)...................._
DOOR OPEN (Y/N)......................_
MANUAL CONTROL ENABLE (Y/N).........._
MANUAL CONTROL ADVANCE (Y/N)........._
SPECIAL FUNCTION ALARM (1-8)........._
TOD HOUR SYCHRONIZATION (0-23)......._
FORCE OFF RING (1-4)................._
HOLD PHASES (1-16)..................._
PLAN (65=FLSH,66=FREE)..._  OFFSET#.._
CHANGE PHASE SEQUENCE PAGE (1-12)...._
CHANGE PHASE TIMING PAGE (1-4)......._
CHANGE PHASE CONTROL PAGE (1-4)....._
CHANGE OVERLAP CONTROL PAGE (1-4)...._
CHANGE INPUT PAGE (1-4).............._
CHANGE OUTPUT PAGE (1-4)............._
OVERRIDE PHASE CONTROL FUNCTION (Y)._
```

→ ENTER A 'Y' FOR NOT ENABLED →

DEFAULT DETECTOR NUMBER WILL REMAIN UNTIL 'NOT ENABLED' IS ENTERED.

(LOOP 5A - PHASE 2)

```
PAGE: 2 C1 PIN:47  NOT ENABLED
INPUT ASSIGNMENT #.................9
DEBOUNCE TIME (0-25.5 SEC).........0.5
DELAY TIME (0-25.5 SEC).............0.0
HOLD-OVER TIME (0-25.5 SEC).........0.0
ASSIGNMENT SELECTION:
NOT ENABLED (Y/N)...................Y
VEHICLE DETECTOR (1-64).............._
PEDESTRIAN DETECTOR (1-16).........._
ALTERNATE PED DETECTOR (1-16)......._
PREEMPT (1-10)......................._
INVERTED PREEMPT (1-10).............._
STOP TIME (Y/N)......................_
FLASH SENSE (Y/N)...................._
DOOR OPEN (Y/N)......................_
MANUAL CONTROL ENABLE (Y/N).........._
MANUAL CONTROL ADVANCE (Y/N)........._
SPECIAL FUNCTION ALARM (1-8)........._
TOD HOUR SYCHRONIZATION (0-23)......._
FORCE OFF RING (1-4)................._
HOLD PHASES (1-16)..................._
PLAN (65=FLSH,66=FREE)..._  OFFSET#.._
CHANGE PHASE SEQUENCE PAGE (1-12)...._
CHANGE PHASE TIMING PAGE (1-4)......._
CHANGE PHASE CONTROL PAGE (1-4)....._
CHANGE OVERLAP CONTROL PAGE (1-4)...._
CHANGE INPUT PAGE (1-4).............._
CHANGE OUTPUT PAGE (1-4)............._
OVERRIDE PHASE CONTROL FUNCTION (Y)._
```

PRESS '+' TO ADVANCE TO INPUT 17

```
PAGE: 2 C1 PIN:55  VEHICLE DETECTOR
INPUT ASSIGNMENT #.................17
DEBOUNCE TIME (0-25.5 SEC).........0.5
DELAY TIME (0-25.5 SEC).............0.0
HOLD-OVER TIME (0-25.5 SEC).........0.0
ASSIGNMENT SELECTION:
NOT ENABLED (Y/N)...................._
VEHICLE DETECTOR (1-64).............5
PEDESTRIAN DETECTOR (1-16).........._
ALTERNATE PED DETECTOR (1-16)......._
PREEMPT (1-10)......................._
INVERTED PREEMPT (1-10).............._
STOP TIME (Y/N)......................_
FLASH SENSE (Y/N)...................._
DOOR OPEN (Y/N)......................_
MANUAL CONTROL ENABLE (Y/N).........._
MANUAL CONTROL ADVANCE (Y/N)........._
SPECIAL FUNCTION ALARM (1-8)........._
TOD HOUR SYCHRONIZATION (0-23)......._
FORCE OFF RING (1-4)................._
HOLD PHASES (1-16)..................._
PLAN (65=FLSH,66=FREE)..._  OFFSET#.._
CHANGE PHASE SEQUENCE PAGE (1-12)...._
CHANGE PHASE TIMING PAGE (1-4)......._
CHANGE PHASE CONTROL PAGE (1-4)....._
CHANGE OVERLAP CONTROL PAGE (1-4)...._
CHANGE INPUT PAGE (1-4).............._
CHANGE OUTPUT PAGE (1-4)............._
OVERRIDE PHASE CONTROL FUNCTION (Y)._
```

→ ENTER '55' TO REASSIGN THE VEHICLE DETECTOR FOR THIS INPUT →

(LOOP 5A - PHASE 5)

```
PAGE: 2 C1 PIN:55  VEHICLE DETECTOR
INPUT ASSIGNMENT #.................17
DEBOUNCE TIME (0-25.5 SEC).........0.5
DELAY TIME (0-25.5 SEC).............0.0
HOLD-OVER TIME (0-25.5 SEC).........0.0
ASSIGNMENT SELECTION:
NOT ENABLED (Y/N)...................._
VEHICLE DETECTOR (1-64).............55
PEDESTRIAN DETECTOR (1-16).........._
ALTERNATE PED DETECTOR (1-16)......._
PREEMPT (1-10)......................._
INVERTED PREEMPT (1-10).............._
STOP TIME (Y/N)......................_
FLASH SENSE (Y/N)...................._
DOOR OPEN (Y/N)......................_
MANUAL CONTROL ENABLE (Y/N).........._
MANUAL CONTROL ADVANCE (Y/N)........._
SPECIAL FUNCTION ALARM (1-8)........._
TOD HOUR SYCHRONIZATION (0-23)......._
FORCE OFF RING (1-4)................._
HOLD PHASES (1-16)..................._
PLAN (65=FLSH,66=FREE)..._  OFFSET#.._
CHANGE PHASE SEQUENCE PAGE (1-12)...._
CHANGE PHASE TIMING PAGE (1-4)......._
CHANGE PHASE CONTROL PAGE (1-4)....._
CHANGE OVERLAP CONTROL PAGE (1-4)...._
CHANGE INPUT PAGE (1-4).............._
CHANGE OUTPUT PAGE (1-4)............._
OVERRIDE PHASE CONTROL FUNCTION (Y)._
```

PROGRAMMING COMPLETE

SPECIAL DETECTOR PROGRAMMING DETAIL - LOOP 5A (ALT.)

(program controller as shown below)

FROM MAIN MENU PRESS '7' (DETECTORS), THEN PRESS '1' FOR VEHICLE DETECTORS. PRESS THE '-' KEY TO GET TO VEHICLE DETECTOR #55.

```
VEHICLE DETECTOR #55  SETTINGS (+-.1-64)
SETTING:                          (Y/N)
ENABLE DETECTOR.....................N
ENABLE LOGGING......................N
ENABLE DIAGNOSTICS..................N
SPEED TRAP..........................N
CALL DETECTOR.......................Y
EXTENSION DETECTOR..................Y
MODE 2 STOP BAR.....................N
SWITCHING DETECTOR..................N
DUPLICATING DETECTOR................N
ENABLE FULL TIME DELAY..............N
IF FAILED, SET MIN RECALL?..........N
IF FAILED, SET MAX1 RECALL?.........N
IF FAILED, SET MAX2 RECALL?.........N
PHASE#          ¦12345678910111213141516
PHASES ASSIGNED ¦
SWITCH/DUPLICATE¦
LOOP SIZE (0-255 FT).................6
SPEED TRAP DISTANCE (0-255 FT)......0
STOP BAR TIME (0-255 SEC)...........0
STRETCH (0-25.5 SEC)................0.0
DELAY (0-255 SEC)...................0
MAX CALLS/MIN (0-255)..............255
MIN CALLS/DIAGNOSTIC PERIOD (0-255).0
MAX OCCUPANCY (0-100%).............100
EXTENSION DISABLE TIME (0-255 SEC)..0
QUEUE MAX OCCUPANCY TIME (0-255)....0
QUEUE GAP RESET TIME (0-25.5).......0.0
PREEMPTION INDEX FOR QUEUE (0-10)...0
```

→ ENTER 'Y' FOR ENABLE DETECTOR →

→ ENTER '5' FOR PHASES ASSIGNED →

→ ENSURE DELAY IS '3' →

```
VEHICLE DETECTOR #55  SETTINGS (+-.1-64)
SETTING:                          (Y/N)
ENABLE DETECTOR.....................Y
ENABLE LOGGING......................N
ENABLE DIAGNOSTICS..................N
SPEED TRAP..........................N
CALL DETECTOR.......................Y
EXTENSION DETECTOR..................Y
MODE 2 STOP BAR.....................N
SWITCHING DETECTOR..................N
DUPLICATING DETECTOR................N
ENABLE FULL TIME DELAY..............N
IF FAILED, SET MIN RECALL?..........N
IF FAILED, SET MAX1 RECALL?.........N
IF FAILED, SET MAX2 RECALL?.........N
PHASE#          ¦12345678910111213141516
PHASES ASSIGNED ¦    X
SWITCH/DUPLICATE¦
LOOP SIZE (0-255 FT).................6
SPEED TRAP DISTANCE (0-255 FT)......0
STOP BAR TIME (0-255 SEC)...........0
STRETCH (0-25.5 SEC)................0.0
DELAY (0-255 SEC)...................3
MAX CALLS/MIN (0-255)..............255
MIN CALLS/DIAGNOSTIC PERIOD (0-255).0
MAX OCCUPANCY (0-100%).............100
EXTENSION DISABLE TIME (0-255 SEC)..0
QUEUE MAX OCCUPANCY TIME (0-255)....0
QUEUE GAP RESET TIME (0-25.5).......0.0
PREEMPTION INDEX FOR QUEUE (0-10)...0
```

DETECTOR PROGRAMMING COMPLETE

NOTE: DETECTOR IS PROGRAMMED PER THE INPUT FILE CONNECTION AND PROGRAMMING CHART SHOWN ON SHEET 1.

THIS ELECTRICAL DETAIL IS FOR THE SIGNAL DESIGN: 03-0752
DESIGNED: Nov 2019
SEALED: 11-25-2019
REVISED: N/A

Electrical Detail - Final Design
Sheet 4 of 5

DOCUMENT NOT CONSIDERED FINAL UNLESS ALL SIGNATURES COMPLETED

ELECTRICAL AND PROGRAMMING DETAILS FOR:

US 17 (Military Cutoff Road) at Drysdale Drive

Division 3 New Hanover County Wilmington

PLAN DATE:	November 2019	REVIEWED BY:	WJ Hamilton
PREPARED BY:	A. Andrews	RKA PROJ. NO:	19258 (040)

REVISIONS	INIT.	DATE

SEAL

NORTH CAROLINA PROFESSIONAL SEAL 32396 ENGINEER WILLIAM J. HAMILTON

Document created by RKA

William J. Hamilton — 11/25/19

SIGNATURE — DATE

SIG. INVENTORY NO. 03-0752

Prepared in the offices of:

RAMEY KEMP & ASSOCIATES, INC.
Transportation Engineers
5808 Faringdon Place, Suite 100
Raleigh, North Carolina 27609
919-872-5115 Tel. 919-878-5416 Fax.
www.rameykemp.com, NC License No. C-0910

750 N.Greenfield Pkwy,Garner,NC 27529

11/25/2019
11:42:20 dgn=03-0752_ele4.dgn
User:jstiff

DocuSign Envelope ID: 8BEE47C3-CECA-4717-8B72-8C77D2788807

PROJECT REFERENCE NO.	SHEET NO.
U-5710A	Sig-2.9

ALTERNATE PHASING ACTIVATION DETAIL

TO RUN ALT. PHASING DURING COORDINATION - SELECT ALL PAGE CHANGES (AS SHOWN BELOW) WITHIN COORDINATION PLAN PROGRAMMING.

TO RUN ALT. PHASING DURING FREE RUN - PROGRAM PAGE CHANGES (SHOWN BELOW) IN SEPARATE TIME OF DAY EVENTS. IF PAGE 1 IS USED, NO EVENT PROGRAMMING IS NECESSARY FOR THAT PARTICULAR PAGE.

PHASING	INPUTS PAGE	OVERLAPS PAGE
ACTIVE PAGES REQUIRED TO RUN DEFAULT PHASING	1	1
ACTIVE PAGES REQUIRED TO RUN ALTERNATE PHASING	2	2

NOTE: PAGES NOT SHOWN (i.e. sequence, phase control, etc.) SHOULD REMAIN AS '1', OR AS DEFINED BY TIMING ENGINEER.

IMPORTANT: IF ALT. PHASING IS USED DURING FREE RUN AND COORDINATION, DO NOT OPERATE TIME OF DAY PAGE CHANGE EVENTS CONCURRENTLY WITH COORDINATION PLAN EVENTS IN THE EVENT SCHEDULER. (EX. FREE RUN PAGE CHANGE EVENT SHOULD END BEFORE COORDINATION PLAN EVENT STARTS AND VICE-VERSA).

ALTERNATE PHASING PAGE CHANGE SUMMARY

THE FOLLOWING IS A SUMMARY OF WHAT TAKES PLACE WHEN THESE OVERLAP/INPUT PAGE CHANGES ACTIVATE TO CALL THE "ALTERNATE PHASING":

OVERLAPS PAGE 2: Modifies overlap parent phases for heads 11 and 51 to run protected turns only.

INPUTS PAGE 2: Disables phase 6 call on loop 1A and reduces delay time for phase 1 call on loop 1A to 0 seconds.

Disables phase 2 call on loop 5A and reduces delay time for phase 5 call on loop 5A to 3 seconds.

THIS ELECTRICAL DETAIL IS FOR THE SIGNAL DESIGN: 03-0752
DESIGNED: Nov 2019
SEALED: 11-25-2019
REVISED: N/A

Electrical Detail - Final Design
Sheet 5 of 5

DOCUMENT NOT CONSIDERED FINAL UNLESS ALL SIGNATURES COMPLETED

Prepared in the offices of:
RAMEY KEMP & ASSOCIATES, INC.
Transportation Engineers
5808 Faringdon Place, Suite 100
Raleigh, North Carolina 27609
919-872-5115 Tel. 919-878-5416 Fax.
www.rameykemp.com, NC License No. C-0910

ELECTRICAL AND PROGRAMMING DETAILS FOR:
750 N.Greenfield Pkwy,Garner,NC 27529

US 17 (Military Cutoff Road) at Drysdale Drive

Division 3 New Hanover County Wilmington

PLAN DATE:	November 2019	REVIEWED BY:	WJ Hamilton
PREPARED BY:	A. Andrews	RKA PROJ. NO:	19258 (040)

REVISIONS	INIT.	DATE

SEAL
NORTH CAROLINA PROFESSIONAL SEAL 32396 ENGINEER WILLIAM J. HAMILTON
Docu Sign Envelope
William J. Hamilton
A0560D7D4A6A4A4
SIGNATURE
11/25/19
DATE
SIG. INVENTORY NO. 03-0752

11/25/2019
...\04-Design\03-0752_ele5.dgn
User:jstiff

DocuSign Envelope ID: 8BEE47C3-CECA-4717-8B72-8C77D2788807

PROJECT REFERENCE NO.	SHEET NO.
U-5710A	Sig-3.0

DEFAULT PHASING DIAGRAM

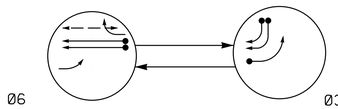

ALTERNATE PHASING DIAGRAM

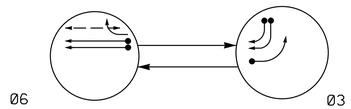

DEFAULT PHASING TABLE OF OPERATION

SIGNAL FACE	PHASE 06	PHASE 03	PHASE FLASH
31,32	~~FY~~	←	~~Y~~
33,34,35	R	→	R
61,62,63	G	R	Y
P61,P62	W	DW	DRK

ALTERNATE PHASING TABLE OF OPERATION

SIGNAL FACE	PHASE 06	PHASE 03	PHASE FLASH
31,32	~~R~~	←	~~Y~~
33,34,35	R	→	R
61,62,63	G	R	Y
P61,P62	W	DW	DRK

OASIS 2070 LOOP & DETECTOR INSTALLATION CHART

INDUCTIVE LOOPS					DETECTOR PROGRAMMING						
LOOP	SIZE (FT)	DISTANCE FROM STOPBAR (FT)	TURNS	NEW LOOP	PHASE	CALLING	EXTENSION	FULL TIME DELAY	STRETCH TIME	DELAY TIME	SYSTEM LOOP	NEW CARD
3A	6X40	0	2-4-2	Y	3	Y	Y	-	-	*10	-	Y
3B	6X40	0	2-4-2	Y	3	Y	Y	-	-	15	-	Y
3C	6X40	0	2-4-2	Y	3	Y	Y	-	-	15	-	Y
6A	6X6	300	5	Y	6	Y	Y	-	-	-	-	Y
6B	6X6	300	5	Y	6	Y	Y	-	-	-	-	Y

* Disable Delay During Alternate Phasing Operation.

2 Phase Fully Actuated (Wilmington Signal System)

1. Refer to "Roadway Standard Drawings NCDOT" dated January 2018, "Standard Specifications for Roads and Structures" dated January 2018.
2. Do not program signal for late night flashing operation unless otherwise directed by the Engineer.
3. Set all detector units to presence mode.
4. Locate new cabinet so as not to obstruct sight distance of vehicles turning right on red.
5. Omit "WALK" and flashing "DON'T WALK" with no pedestrian calls.
6. Program the pedestrian heads to countdown the flashing "DON'T WALK" time only.
7. The Division Traffic Engineer will determine the hours of use for each phasing plan.
8. Maximum times shown in timing chart are for free-run operation only. Coordinated signal system timing values supersede these values.
9. Signal system data:
   Controller Asset #1153.
10. Refer to pavement marking plans for stop bar and crosswalk location.
11. Metal strain poles and Type II pedestals shall be black powder-coated.

PHASING DIAGRAM DETECTION LEGEND

- DETECTED MOVEMENT
- UNDETECTED MOVEMENT (OVERLAP)
- UNSIGNALIZED MOVEMENT
- PEDESTRIAN MOVEMENT

SIGNAL FACE I.D.

All Heads L.E.D.

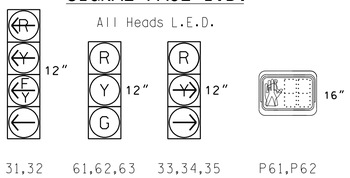

OASIS 2070 TIMING CHART

FEATURE	PHASE 3	PHASE 6
Min Green 1 *	5	12
Extension 1 *	2.0	6.0
Max Green 1 *	15	90
Yellow Clearance	3.0	4.5
Red Clearance	3.2	2.2
Walk 1 *	-	7
Don't Walk 1	-	40
Seconds Per Actuation *	-	1.5
Max Variable Initial *	-	34
Time Before Reduction *	-	15
Time To Reduce *	-	30
Minimum Gap	-	3.0
Recall Mode	-	MIN RECALL
Vehicle Call Memory	-	YELLOW
Dual Entry	-	-
Simultaneous Gap	ON	ON

* These values may be field adjusted. Do not adjust Min Green and Extension times for phase 6 lower than what is shown. Min Green for all other phases should not be lower than 4 seconds.

LEGEND

PROPOSED		EXISTING
	Traffic Signal Head	
	Modified Signal Head	N/A
	Sign	
	Pedestrian Signal Head With Push Button & Sign	
	Signal Pole with Guy	
	Signal Pole with Sidewalk Guy	
	Inductive Loop Detector	
	Controller & Cabinet	
	Junction Box	
	2-in Underground Conduit	
N/A	Right of Way	
	Directional Arrow	
	Metal Strain Pole	
	Type II Signal Pedestal	
	Street Name Sign	

New Installation

Prepared in the offices of:
RAMEY KEMP & ASSOCIATES, INC.
Transportation Engineers
5808 Faringdon Place, Suite 100
Raleigh, North Carolina 27609
919-872-5115 Tel. 919-878-5416 Fax.
www.rameykemp.com, NC License No. C-0910

Prepared for: Transportation Mobility and Safety Division, North Carolina Department of Transportation, Signal Design Section
750 N.Greenfield Pkwy.Garner,NC 27529

SCALE 0 40 1"=40'

US 74 (Eastwood Road) at Drysdale Drive

Division 3 New Hanover County Wilmington

PLAN DATE:	November 2019	REVIEWED BY:	WJ Hamilton
PREPARED BY:	A. Andrews	RKA PROJ. NO.:	19258 (040)

REVISIONS	INIT.	DATE

DOCUMENT NOT CONSIDERED FINAL UNLESS ALL SIGNATURES COMPLETED

SEAL
NORTH CAROLINA PROFESSIONAL SEAL 32396 ENGINEER WILLIAM J. HAMILTON

DocuSigned by: William J. Hamilton
SIGNATURE
11/25/19
DATE

SIG. INVENTORY NO. 03-1153

11/25/2019
...\404-Oblique\03-1153_sig.dgn
User:jsliff

DocuSign Envelope ID: 8BEE47C3-CECA-4717-8B72-8C77D2788807

EDI MODEL 2018ECLip-NC CONFLICT MONITOR PROGRAMMING DETAIL

(remove jumpers and set switches as shown)

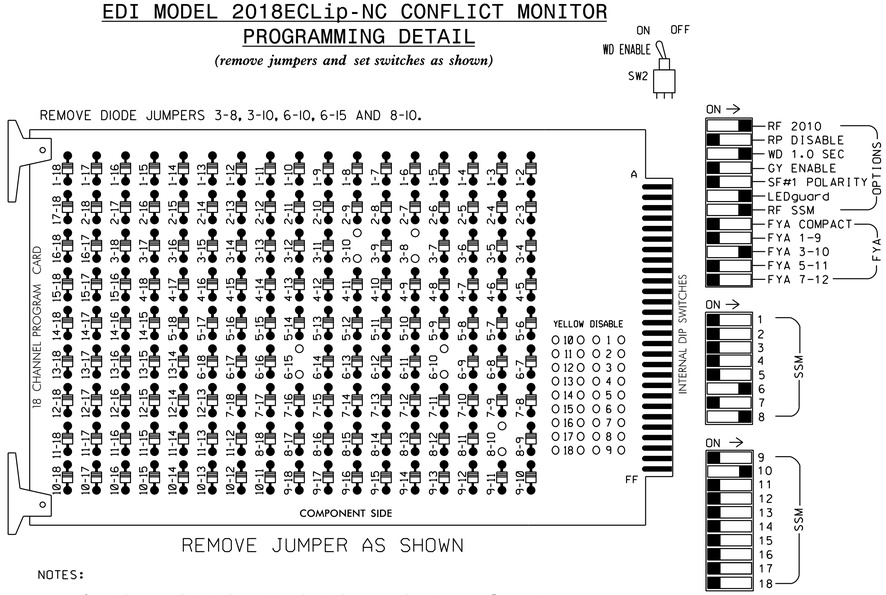

REMOVE JUMPER AS SHOWN

NOTES:

1. Card is provided with all diode jumpers in place. Removal of any jumper allows its channels to run concurrently.
2. Ensure jumpers SEL2-SEL5 and SEL9 are present on the monitor board.
3. Ensure that Red Enable is active at all times during normal operation.
4. Integrate monitor with Ethernet network in cabinet.

■ = DENOTES POSITION OF SWITCH

NOTES

1. To prevent "flash-conflict" problems, insert red flash program blocks for all unused vehicle load switches in the output file. The installer shall verify that signal heads flash in accordance with the Signal Plans.
2. Enable Simultaneous Gap-Out for all Phases.
3. Program phase 6 for Variable Initial and Gap Reduction.
4. Program phase 6 for Startup In Green.
5. Program phase 6 for Startup Ped Call.
6. Program phase 6 for Yellow Flash.
7. The cabinet and controller are part of the Wilmington Signal System.

EQUIPMENT INFORMATION

CONTROLLER.....2070E
CABINET.....332 /W/ AUX
SOFTWARE.....ECONOLITE OASIS
CABINET MOUNT.....BASE
OUTPUT FILE POSITIONS...18 WITH AUX. OUTPUT FILE
LOAD SWITCHES USED.....S4,S8,S9,S11,AUX S2
PHASES USED.....3,6,6PED
OVERLAP "A".....NOT USED
OVERLAP "B".....3+6
OVERLAP "C".....NOT USED
OVERLAP "D".....NOT USED
OVERLAP "G".....3

PROJECT REFERENCE NO.	SHEET NO.
U-5710A	Sig-3.1

SIGNAL HEAD HOOK-UP CHART

LOAD SWITCH NO.	S1	S2	S3	S4	S5	S6	S7	S8	S9	S10	S11	S12	AUX S1	AUX S2	AUX S3	AUX S4	AUX S5	AUX S6
CMU CHANNEL NO.	1	2	13	3	4	14	5	6	15	7	8	16	9	10	17	11	12	18
PHASE	1	2	2 PED	3	4	4 PED	5	6	6 PED	7	** OLG	8 PED	OLA	OLB	SPARE	OLC	OLD	SPARE
SIGNAL HEAD NO.	NU	NU	NU	31,32 ★	NU	NU	NU	61,62, 63	P61, P62	NU	33,34, 35	NU	NU	31,32 ★	NU	NU	NU	NU
RED								134			107							
YELLOW				*				135										
GREEN								136										
RED ARROW														A124				
YELLOW ARROW											108			A125				
FLASHING YELLOW ARROW														A126				
GREEN ARROW				118							109							
✋									119									
🚶									121									

NU = Not Used
★ See pictorial of head wiring in detail this sheet.
* Denotes install load resistor. See load resistor installation detail this sheet.
** Requires special programming and output remapping. See sheets 2 and 4.

FYA SIGNAL WIRING DETAIL

(wire signal heads as shown)

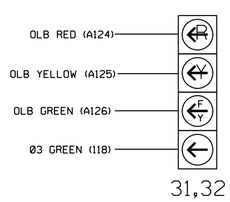

NOTE

1. The display sequence for signal heads 31 and 32 requires special programming. See sheet 2 for programming instructions.

COUNTDOWN PEDESTRIAN SIGNAL OPERATION

Countdown ped signals are required to display timing only during ped clearance interval. Consult ped signal module user's manual for instructions on selecting this feature.

INPUT FILE POSITION LAYOUT

(front view)

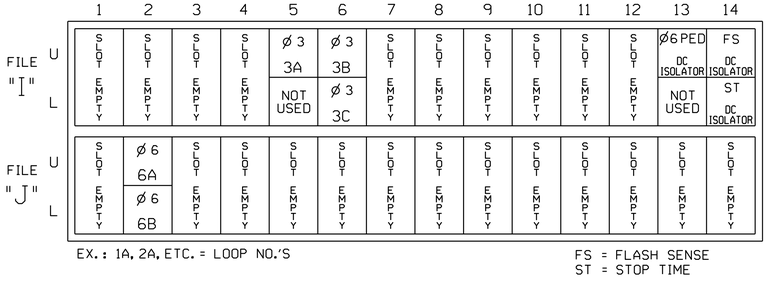

EX.: 1A, 2A, ETC. = LOOP NO.'S

FS = FLASH SENSE
ST = STOP TIME

INPUT FILE CONNECTION & PROGRAMMING CHART

LOOP NO.	LOOP TERMINAL	INPUT FILE POS.	PIN NO.	INPUT ASSIGNMENT NO.	DETECTOR NO.	NEMA PHASE	CALL	EXTEND	FULL TIME DELAY	STRETCH TIME	DELAY TIME
3A	TB4-5,6	I5U	58	20	3	3	Y	Y			10
	-	I5U	58	20 ★	53	3	Y	Y			
3B	TB4-9,10	I6U	41	3	4	3	Y	Y			15
3C	TB4-11,12	I6L	45	7	14	3	Y	Y			15
6A	TB3-5,6	J2U	40	2	6	6	Y	Y			
6B	TB3-7,8	J2L	44	6	16	6	Y	Y			
PED PUSH BUTTONS											
P61,P62	TB8-7,9	I13U	68	30	PED 6	6 PED					

NOTE:
INSTALL DC ISOLATOR IN INPUT FILE SLOT I13.

★ See Input Page Assignment programming details on sheet 3.

INPUT FILE POSITION LEGEND: J2L
FILE J
SLOT 2
LOWER

LOAD RESISTOR INSTALLATION DETAIL

(install resistor as shown)

ACCEPTABLE VALUES	
VALUE (ohms)	WATTAGE
1.5K - 1.9K	25W (min)
2.0K - 3.0K	10W (min)

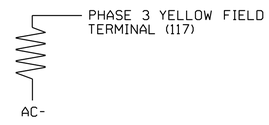

THIS ELECTRICAL DETAIL IS FOR
THE SIGNAL DESIGN: Ø3-1153
DESIGNED: Nov 2019
SEALED: 11-25-2019
REVISED: N/A

Electrical Detail
Sheet 1 of 4

DOCUMENT NOT CONSIDERED FINAL UNLESS ALL SIGNATURES COMPLETED

Prepared in the offices of:
RAMEY KEMP & ASSOCIATES, INC.
Transportation Engineers
5808 Faringdon Place, Sulte 100
Raleigh, North Carolina 27609
919-872-5115 Tel. 919-878-5416 Fax.
www.rameykemp.com

ELECTRICAL AND PROGRAMMING DETAILS FOR:

750 N.Greenfield Pkwy.Garner,NC 27529

US 74 (Eastwood Road) at Drysdale Drive

Division 3 New Hanover County Wilmington

PLAN DATE:	November 2019	REVIEWED BY:	WJ Hamilton
PREPARED BY:	A. Andrews	RKA PROJ. NO.:	19258 (040)

REVISIONS	INIT.	DATE

SEAL
NORTH CAROLINA PROFESSIONAL SEAL 32396 ENGINEER WILLIAM J. HAMILTON

DocuSigned by: William J. Hamilton A05E0D7D4A84A84... 11/25/19
SIGNATURE DATE

SIG. INVENTORY NO. 03-1153

11/25/2019
#03-1153_e16.dgn
User:lstiff

DocuSign Envelope ID: 8BEE47C3-CECA-4717-8B72-8C77D2788807

PROJECT REFERENCE NO.	SHEET NO.
U-5710A	Sig-3.2

LOGICAL I/O PROCESSOR PROGRAMMING DETAIL
TO PRODUCE SPECIAL FYA-PPLT SIGNAL SEQUENCE

(program controller as shown below)

1. FROM MAIN MENU PRESS '2' (PHASE CONTROL), THEN '1' (PHASE CONTROL FUNCTIONS). SCROLL TO THE BOTTOM OF THE MENU AND ENABLE ACT LOGIC COMMANDS 1, 2 AND 3.

2. FROM MAIN MENU PRESS '6' (OUTPUTS), THEN '3' (LOGICAL I/O PROCESSOR).

```
  LOGICAL I/O COMMAND #1  (+/-COMMAND#)
IF  ACTIVE PHASE       #3  IS ON
AND RED CLEAR ON PHASE #3  IS ON

            SCROLL DOWN

THEN:
SET OUTPUT  ASSIGNMENT #47 ON
SET OUTPUT  ASSIGNMENT #48 OFF
```

NOTE: LOGIC FOR PHASE 3 RED CLEAR WHEN TRANSITIONING FROM PHASE 3 TO PHASE 6 (HEADS 31 AND 32).

PRESS '+'

```
  LOGICAL I/O COMMAND #2  (+/-COMMAND#)
IF  ACTIVE PHASE       #3  IS ON

            SCROLL DOWN

THEN:
SET OUTPUT  ASSIGNMENT #49 OFF
```

NOTE: LOGIC FOR SWITCHING FLASHING YELLOW ARROW "OFF" DURING PHASE 3 (HEADS 31 AND 32).

PRESS '+'

```
  LOGICAL I/O COMMAND #3  (+/-COMMAND#)
IF  YELLOW ON PHASE    #3  IS ON

            SCROLL DOWN

THEN:
SET OUTPUT  ASSIGNMENT #48 ON
```

NOTE: LOGIC FOR YELLOW ARROW CLEARANCE FROM PHASE 3 (HEADS 31 AND 32).

LOGIC I/O PROCESSOR PROGRAMMING COMPLETE

OUTPUT REFERENCE SCHEDULE

OUTPUT 47 = Overlap B Red
OUTPUT 48 = Overlap B Yellow
OUTPUT 49 = Overlap B Green

DEFAULT OVERLAP PROGRAMMING DETAIL

(program controller as shown below)

FROM MAIN MENU PRESS '8' (OVERLAPS), THEN '1' (VEHICLE OVERLAP SETTINGS).

PRESS '+'

```
 PAGE 1: VEHICLE OVERLAP 'B' SETTINGS
 PHASE:          |12345678910111213141516
VEH OVL PARENTS: |  X  X
VEH OVL NOT VEH: |
VEH OVL NOT PED: |
VEH OVL GRN EXT: |
STARTUP COLOR: _ RED  _ YELLOW  _ GREEN
FLASH COLORS:  _ RED  _ YELLOW  X GREEN
SELECT VEHICLE OVERLAP OPTIONS:   (Y/N)
FLASH YELLOW IN CONTROLLER FLASH?...Y
GREEN EXTENSION (0-255 SEC).........0
YELLOW CLEAR (0=PARENT,3-25.5 SEC)..0.0
RED CLEAR (0=PARENT,0.1-25.5 SEC)...0.0
OUTPUT AS PHASE # (0=NONE, 1-16)....0
```

OVERLAP 'B' PROGRAMMING COMPLETE

← NOTICE GREEN FLASH

PRESS '+' UNTIL OVERLAP 'G' APPEARS

```
 PAGE 1: VEHICLE OVERLAP 'G' SETTINGS
 PHASE:          |12345678910111213141516
VEH OVL PARENTS: |  X
VEH OVL NOT VEH: |
VEH OVL NOT PED: |
VEH OVL GRN EXT: |
STARTUP COLOR: _ RED  _ YELLOW  _ GREEN
FLASH COLORS:  _ RED  _ YELLOW  _ GREEN
SELECT VEHICLE OVERLAP OPTIONS:   (Y/N)
FLASH YELLOW IN CONTROLLER FLASH?...N
GREEN EXTENSION (0-255 SEC).........0
YELLOW CLEAR (0=PARENT,3-25.5 SEC)..0.0
RED CLEAR (0=PARENT,0.1-25.5 SEC)...0.0
OUTPUT AS PHASE # (0=NONE, 1-16)....0
```

OVERLAP 'G' PROGRAMMING COMPLETE

ALTERNATE OVERLAP PROGRAMMING DETAIL

(program controller as shown below)

FROM MAIN MENU PRESS '8' (OVERLAPS), THEN '1' (VEHICLE OVERLAP SETTINGS). PRESS 'NEXT' TO ADVANCE TO PAGE 2.

PRESS '+'

NOTICE PAGE 2 →

```
 PAGE 2: VEHICLE OVERLAP 'B' SETTINGS
 PHASE:          |12345678910111213141516
VEH OVL PARENTS: |  X
VEH OVL NOT VEH: |
VEH OVL NOT PED: |
VEH OVL GRN EXT: |
STARTUP COLOR: _ RED  _ YELLOW  _ GREEN
FLASH COLORS:  _ RED  _ YELLOW  _ GREEN
SELECT VEHICLE OVERLAP OPTIONS:   (Y/N)
FLASH YELLOW IN CONTROLLER FLASH?...Y
GREEN EXTENSION (0-255 SEC).........0
YELLOW CLEAR (0=PARENT,3-25.5 SEC)..0.0
RED CLEAR (0=PARENT,0.1-25.5 SEC)...0.0
OUTPUT AS PHASE # (0=NONE, 1-16)....0
```

OVERLAP 'B' PROGRAMMING COMPLETE

← REMOVE GREEN FLASH PROGRAMMING

PRESS '+' UNTIL OVERLAP 'G' APPEARS

NOTICE PAGE 2 →

```
 PAGE 1: VEHICLE OVERLAP 'G' SETTINGS
 PHASE:          |12345678910111213141516
VEH OVL PARENTS: |  X
VEH OVL NOT VEH: |
VEH OVL NOT PED: |
VEH OVL GRN EXT: |
STARTUP COLOR: _ RED  _ YELLOW  _ GREEN
FLASH COLORS:  _ RED  _ YELLOW  _ GREEN
SELECT VEHICLE OVERLAP OPTIONS:   (Y/N)
FLASH YELLOW IN CONTROLLER FLASH?...N
GREEN EXTENSION (0-255 SEC).........0
YELLOW CLEAR (0=PARENT,3-25.5 SEC)..0.0
RED CLEAR (0=PARENT,0.1-25.5 SEC)...0.0
OUTPUT AS PHASE # (0=NONE, 1-16)....0
```

OVERLAP 'G' PROGRAMMING COMPLETE

THIS ELECTRICAL DETAIL IS FOR
THE SIGNAL DESIGN: 03-1153
DESIGNED: Nov 2019
SEALED: 11-25-2019
REVISED: N/A

Electrical Detail
Sheet 2 of 4

DOCUMENT NOT CONSIDERED FINAL UNLESS ALL SIGNATURES COMPLETED

Prepared in the offices of:

RAMEY KEMP & ASSOCIATES, INC.
Transportation Engineers
5808 Farringdon Place, Suite 100
Raleigh, North Carolina 27609
919-872-5115 Tel. 919-878-5416 Fax.
www.rameykemp.com

ELECTRICAL AND PROGRAMMING DETAILS FOR:

NCDOT Transportation Mobility and Safety Division
Traffic Engineering Branch
Signal Management Section

750 N.Greenfield Pkwy.Garner,NC 27529

US 74 (Eastwood Road)
at
Drysdale Drive

Division 3 New Hanover County Wilmington

PLAN DATE: November 2019	REVIEWED BY: WJ Hamilton
PREPARED BY: A. Andrews	RKA PROJ. NO.: 19258 (040)

REVISIONS	INIT.	DATE

SEAL
NORTH CAROLINA PROFESSIONAL SEAL 32396 ENGINEER WILLIAM J. HAMILTON

Docusigned by: William J. Hamilton
A056007D46B4B4...
SIGNATURE 11/25/19 DATE

SIG. INVENTORY NO. 03-1153

11/25/2019
e:\projects\dgn\03-1153_elec2.dgn
User:jstiff

DocuSign Envelope ID: 8BEE47C3-CECA-4717-8B72-8C77D2788807

PROJECT REFERENCE NO.	SHEET NO.
U-5710A	Sig-3.3

INPUT PAGE 2 ASSIGNMENT PROGRAMMING DETAIL FOR ALTERNATE PHASING - LOOP 3A

(program controller as shown below)

NOTES: 1. THIS PROGRAMMING APPLIES FOR INPUT PAGE 2 ONLY. INPUT PAGE 1 WILL USE STANDARD DEFAULT SETTINGS. THIS PROGRAMMING IS NECESSARY FOR PROPER DETECTOR OPERATION DURING ALTERNATE PHASING OPERATION.

2. THIS PROGRAMMING REASSIGNS DETECTOR 53 TO INPUT #20 SO THAT THE DELAY ON LOOP 3A CAN BE REDUCED FROM 10 SECONDS TO 0 SECONDS.

FROM MAIN MENU PRESS '5' (INPUTS), THEN PRESS 'NEXT' TO GET TO INPUT PAGE '2'. PRESS THE '+' KEY UNTIL INPUT 20 IS REACHED.

```
PAGE: 2 C1 PIN:58  VEHICLE DETECTOR
INPUT ASSIGNMENT #.................20
DEBOUNCE TIME (0-25.5 SEC).........0.5
DELAY TIME (0-25.5 SEC).............0.0
HOLD-OVER TIME (0-25.5 SEC).........0.0
ASSIGNMENT SELECTION:
NOT ENABLED (Y/N)..................._
VEHICLE DETECTOR (1-64).............3
PEDESTRIAN DETECTOR (1-16).........._
ALTERNATE PED DETECTOR (1-16)......._
PREEMPT (1-10)......................._
INVERTED PREEMPT (1-10)............._
STOP TIME (Y/N).....................N
FLASH SENSE (Y/N)...................N
DOOR OPEN (Y/N).....................N
MANUAL CONTROL ENABLE (Y/N).........N
MANUAL CONTROL ADVANCE (Y/N)........N
SPECIAL FUNCTION ALARM (1-8)........0
TOD HOUR SYCHRONIZATION (0-23)......0
FORCE OFF RING (1-4)................0
HOLD PHASES (1-16)..................0
PLAN (65=FLSH,66=FREE)..  OFFSET#..0
CHANGE PHASE SEQUENCE PAGE (1-12)...1
CHANGE PHASE TIMING PAGE (1-4)......1
CHANGE PHASE CONTROL PAGE (1-4).....1
CHANGE OVERLAP CONTROL PAGE (1-4)...1
CHANGE INPUT PAGE (1-4).............1
CHANGE OUTPUT PAGE (1-4)............1
OVERRIDE PHASE CONTROL FUNCTION (Y)._
```

→ ENTER '53' TO REASSIGN THE VEHICLE DETECTOR FOR THIS INPUT →

(LOOP 3A - PHASE 3)

```
PAGE: 2 C1 PIN:58  VEHICLE DETECTOR
INPUT ASSIGNMENT #.................20
DEBOUNCE TIME (0-25.5 SEC).........0.5
DELAY TIME (0-25.5 SEC).............0.0
HOLD-OVER TIME (0-25.5 SEC).........0.0
ASSIGNMENT SELECTION:
NOT ENABLED (Y/N)..................._
VEHICLE DETECTOR (1-64).............53
PEDESTRIAN DETECTOR (1-16).........._
ALTERNATE PED DETECTOR (1-16)......._
PREEMPT (1-10)......................._
INVERTED PREEMPT (1-10)............._
STOP TIME (Y/N).....................N
FLASH SENSE (Y/N)...................N
DOOR OPEN (Y/N).....................N
MANUAL CONTROL ENABLE (Y/N).........N
MANUAL CONTROL ADVANCE (Y/N)........N
SPECIAL FUNCTION ALARM (1-8)........0
TOD HOUR SYCHRONIZATION (0-23)......0
FORCE OFF RING (1-4)................0
HOLD PHASES (1-16)..................0
PLAN (65=FLSH,66=FREE)..  OFFSET#..0
CHANGE PHASE SEQUENCE PAGE (1-12)...1
CHANGE PHASE TIMING PAGE (1-4)......1
CHANGE PHASE CONTROL PAGE (1-4).....1
CHANGE OVERLAP CONTROL PAGE (1-4)...1
CHANGE INPUT PAGE (1-4).............1
CHANGE OUTPUT PAGE (1-4)............1
OVERRIDE PHASE CONTROL FUNCTION (Y)._
```

PROGRAMMING COMPLETE

SPECIAL DETECTOR PROGRAMMING DETAIL - LOOP 3A (ALT.)

(program controller as shown below)

FROM MAIN MENU PRESS '7' (DETECTORS), THEN PRESS '1' FOR VEHICLE DETECTORS. PRESS THE '-' KEY TO GET TO VEHICLE DETECTOR #53.

```
VEHICLE DETECTOR #53  SETTINGS (+-,1-64)
SETTING:                          (Y/N)
ENABLE DETECTOR.....................N
ENABLE LOGGING......................N
ENABLE DIAGNOSTICS..................N
SPEED TRAP..........................N
CALL DETECTOR.......................Y
EXTENSION DETECTOR..................Y
MODE 2 STOP BAR.....................N
SWITCHING DETECTOR..................N
DUPLICATING DETECTOR................N
ENABLE FULL TIME DELAY..............N
IF FAILED, SET MIN RECALL?..........N
IF FAILED, SET MAX1 RECALL?.........N
IF FAILED, SET MAX2 RECALL?.........N
PHASE#          ¦1234567891011121314151 6
PHASES ASSIGNED ¦
SWITCH/DUPLICATE¦
LOOP SIZE (0-255 FT)................6
SPEED TRAP DISTANCE (0-255 FT)......0
STOP BAR TIME (0-255 SEC)...........0
STRETCH (0-25.5 SEC)................0.0
DELAY (0-255 SEC)...................0
MAX CALLS/MIN (0-255)...............255
MIN CALLS/DIAGNOSTIC PERIOD (0-255).0
MAX OCCUPANCY (0-100%).............100
EXTENSION DISABLE TIME (0-255 SEC)..0
QUEUE MAX OCCUPANCY TIME (0-255)....0
QUEUE GAP RESET TIME (0-25.5).......0.0
PREEMPTION INDEX FOR QUEUE (0-10)...0
```

→ ENTER 'Y' FOR ENABLE DETECTOR →

→ ENTER '3' FOR PHASES ASSIGNED →

→ ENSURE DELAY IS '0' →

```
VEHICLE DETECTOR #53  SETTINGS (+-,1-64)
SETTING:                          (Y/N)
ENABLE DETECTOR.....................Y
ENABLE LOGGING......................N
ENABLE DIAGNOSTICS..................N
SPEED TRAP..........................N
CALL DETECTOR.......................Y
EXTENSION DETECTOR..................Y
MODE 2 STOP BAR.....................N
SWITCHING DETECTOR..................N
DUPLICATING DETECTOR................N
ENABLE FULL TIME DELAY..............N
IF FAILED, SET MIN RECALL?..........N
IF FAILED, SET MAX1 RECALL?.........N
IF FAILED, SET MAX2 RECALL?.........N
PHASE#          ¦1234567891011121314151 6
PHASES ASSIGNED ¦  X
SWITCH/DUPLICATE¦
LOOP SIZE (0-255 FT)................6
SPEED TRAP DISTANCE (0-255 FT)......0
STOP BAR TIME (0-255 SEC)...........0
STRETCH (0-25.5 SEC)................0.0
DELAY (0-255 SEC)...................0
MAX CALLS/MIN (0-255)...............255
MIN CALLS/DIAGNOSTIC PERIOD (0-255).0
MAX OCCUPANCY (0-100%).............100
EXTENSION DISABLE TIME (0-255 SEC)..0
QUEUE MAX OCCUPANCY TIME (0-255)....0
QUEUE GAP RESET TIME (0-25.5).......0.0
PREEMPTION INDEX FOR QUEUE (0-10)...0
```

DETECTOR PROGRAMMING COMPLETE

NOTE: DETECTOR IS PROGRAMMED PER THE INPUT FILE CONNECTION AND PROGRAMMING CHART SHOWN ON SHEET 1.

THIS ELECTRICAL DETAIL IS FOR THE SIGNAL DESIGN: 03-1153
DESIGNED: Nov 2019
SEALED: 11-25-2019
REVISED: N/A

Electrical Detail
Sheet 3 of 4

DOCUMENT NOT CONSIDERED FINAL UNLESS ALL SIGNATURES COMPLETED

ELECTRICAL AND PROGRAMMING DETAILS FOR:

US 74 (Eastwood Road)
at
Drysdale Drive

Division 3 New Hanover County Wilmington

PLAN DATE:	November 2019	REVIEWED BY:	WJ Hamilton
PREPARED BY:	A. Andrews	RKA PROJ. NO:	19258 (040)

REVISIONS	INIT.	DATE

Prepared in the offices of:
RAMEY KEMP & ASSOCIATES, INC.
Transportation Engineers
5808 Faringdon Place, Suite 100
Raleigh, North Carolina 27609
919-872-5115 Tel. 919-878-5416 Fax.
www.rameykemp.com, NC License No. C-0910

Transportation Mobility and Safety Division
Traffic Engineering Branch
NORTH CAROLINA DEPARTMENT OF TRANSPORTATION
Signals Management Section
750 N.Greenfield Pkwy,Garner,NC 27529

SEAL
NORTH CAROLINA PROFESSIONAL SEAL 32396 ENGINEER WILLIAM J. HAMILTON
William J. Hamilton 11/25/19
SIGNATURE DATE

SIG. INVENTORY NO. 03-1153

11/25/2019
...#03-1153_eleSign#03-1153_ele3.dgn
User:lstiff

DocuSign Envelope ID: 8BEE47C3-CECA-4717-8B72-8C77D2788807

PROJECT REFERENCE NO.	SHEET NO.
U-5710A	Sig-3.4

OUTPUT ASSIGNMENT PROGRAMMING DETAIL FOR OVERLAP "G" TO LOADSWITCH "S11"

(program controller as shown below)

1. FROM MAIN MENU PRESS '6' (OUTPUTS), THEN '1' (OUTPUT ASSIGNMENTS).

2. WITH CURSOR IN "OUTPUT ASSIGNMENT #" FIELD, USE + KEY TO FIND THE OUTPUT ASSIGNMENT NUMBER 19. AS SHOWN BELOW.

3. PROGRAM CONTROLLER AS SHOWN:

```
PAGE:1  C1 PIN:21  VEHICLE PHASE
OUTPUT ASSIGNMENT #.................19
FREQUENCY (0=DEFAULT) (0-25.5 HZ)...0.0
DUTY CYCLE (0=DEFAULT) (0 - 100%)...0
MODE (0=SOLID,1=FLASH)..............1
SELECT ASSIGNMENT:
NOT ENABLED.........................
VEHICLE PHASE.......................Y
PEDESTRIAN PHASE....................
VEHICLE OVERLAP.....................Y
PEDESTRIAN OVERLAP..................
WATCHDOG............................
DETECTOR RESET......................
ADVANCE BEACON......................
OUT OF PHASE FLASHER................
CONTROLLER FLASH....................
RUN FREE............................
RESERVED............................
PREEMPT.............................
SOFT PREEMPT........................
ANY PREEMPT.........................
COORDINATION PLAN...................
OFFSET..............................
PHASE CHECK.........................
PHASE ON............................
PHASE NEXT..........................
```

THE OUTPUT IS SET AS A VEHICLE PHASE BY DEFAULT. THIS "Y" WILL REMAIN UNTIL THE OUTPUT IS CHANGED.

ENTER A "Y" FOR VEHICLE OVERLAP.

```
PAGE:21  C1 PIN:21  VEHICLE PHASE
SELECT VEHICLE OVERLAP (A=1,P=161)...7
SELECT COLOR (0=RED,1=YEL,2=GRN).....0
```

WHEN A 'Y' IS ENTERED FOR 'VEHICLE OVERLAP' THE SCREEN SHOWN ABOVE WILL APPEAR. ENTER DATA AS SHOWN.

PRESS THE 'ENT' AFTER AFTER INPUTING DATA, THEN 'ESC'.

DISPLAY WILL NOW SHOW THE SPECIFIED OUTPUT ASSIGNED AS 'VEHICLE OVERLAP' AS SHOWN BELOW.

```
PAGE:1  C1 PIN:21  VEHICLE OVERLAP
OUTPUT ASSIGNMENT #.................19
FREQUENCY (0=DEFAULT) (0-25.5 HZ)...0.0
DUTY CYCLE (0=DEFAULT) (0 - 100%)...0
MODE (0=SOLID,1=FLASH)..............1
SELECT ASSIGNMENT:
NOT ENABLED.........................
VEHICLE PHASE.......................
PEDESTRIAN PHASE....................
VEHICLE OVERLAP.....................Y
PEDESTRIAN OVERLAP..................
WATCHDOG............................
DETECTOR RESET......................
ADVANCE BEACON......................
OUT OF PHASE FLASHER................
CONTROLLER FLASH....................
RUN FREE............................
RESERVED............................
PREEMPT.............................
SOFT PREEMPT........................
ANY PREEMPT.........................
COORDINATION PLAN...................
OFFSET..............................
PHASE CHECK.........................
PHASE ON............................
PHASE NEXT..........................
```

PRESS '+' KEY FOR OUTPUT 20

```
PAGE:1  C1 PIN:22  VEHICLE PHASE
OUTPUT ASSIGNMENT #.................20
FREQUENCY (0=DEFAULT) (0-25.5 HZ)...0.0
DUTY CYCLE (0=DEFAULT) (0 - 100%)...0
MODE (0=SOLID,1=FLASH)..............1
SELECT ASSIGNMENT:
NOT ENABLED.........................
VEHICLE PHASE.......................Y
PEDESTRIAN PHASE....................
VEHICLE OVERLAP.....................Y
PEDESTRIAN OVERLAP..................
WATCHDOG............................
DETECTOR RESET......................
ADVANCE BEACON......................
OUT OF PHASE FLASHER................
CONTROLLER FLASH....................
RUN FREE............................
RESERVED............................
PREEMPT.............................
SOFT PREEMPT........................
ANY PREEMPT.........................
COORDINATION PLAN...................
OFFSET..............................
PHASE CHECK.........................
PHASE ON............................
PHASE NEXT..........................
```

THE OUTPUT IS SET AS A VEHICLE PHASE BY DEFAULT. THIS "Y" WILL REMAIN UNTIL THE OUTPUT IS CHANGED.

ENTER A "Y" FOR VEHICLE OVERLAP.

```
PAGE:1  C1 PIN:22   VEHICLE PHASE
SELECT VEHICLE OVERLAP (A=1,P=161)...7
SELECT COLOR (0=RED,1=YEL,2=GRN).....1
```

WHEN A 'Y' IS ENTERED FOR 'VEHICLE OVERLAP' THE SCREEN SHOWN ABOVE WILL APPEAR. ENTER DATA AS SHOWN.

PRESS THE 'ENT' AFTER AFTER INPUTING DATA, THEN 'ESC'.

DISPLAY WILL NOW SHOW THE SPECIFIED OUTPUT ASSIGNED AS 'VEHICLE OVERLAP' AS SHOWN BELOW.

```
PAGE:1  C1 PIN:22  VEHICLE OVERLAP
OUTPUT ASSIGNMENT #.................20
FREQUENCY (0=DEFAULT) (0-25.5 HZ)...0.0
DUTY CYCLE (0=DEFAULT) (0 - 100%)...0
MODE (0=SOLID,1=FLASH)..............1
SELECT ASSIGNMENT:
NOT ENABLED.........................
VEHICLE PHASE.......................
PEDESTRIAN PHASE....................
VEHICLE OVERLAP.....................Y
PEDESTRIAN OVERLAP..................
WATCHDOG............................
DETECTOR RESET......................
ADVANCE BEACON......................
OUT OF PHASE FLASHER................
CONTROLLER FLASH....................
RUN FREE............................
RESERVED............................
PREEMPT.............................
SOFT PREEMPT........................
ANY PREEMPT.........................
COORDINATION PLAN...................
OFFSET..............................
PHASE CHECK.........................
PHASE ON............................
PHASE NEXT..........................
```

PRESS '+' KEY FOR OUTPUT 21

```
PAGE:1  C1 PIN:23   VEHICLE PHASE
OUTPUT ASSIGNMENT #.................21
FREQUENCY (0=DEFAULT) (0-25.5 HZ)...0.0
DUTY CYCLE (0=DEFAULT) (0 - 100%)...0
MODE (0=SOLID,1=FLASH)..............1
SELECT ASSIGNMENT:
NOT ENABLED.........................
VEHICLE PHASE.......................Y
PEDESTRIAN PHASE....................
VEHICLE OVERLAP.....................Y
PEDESTRIAN OVERLAP..................
WATCHDOG............................
DETECTOR RESET......................
ADVANCE BEACON......................
OUT OF PHASE FLASHER................
CONTROLLER FLASH....................
RUN FREE............................
RESERVED............................
PREEMPT.............................
SOFT PREEMPT........................
ANY PREEMPT.........................
COORDINATION PLAN...................
OFFSET..............................
PHASE CHECK.........................
PHASE ON............................
PHASE NEXT..........................
```

THE OUTPUT IS SET AS A VEHICLE PHASE BY DEFAULT. THIS "Y" WILL REMAIN UNTIL THE OUTPUT IS CHANGED.

ENTER A "Y" FOR VEHICLE OVERLAP.

```
PAGE:1  C1 PIN:23   VEHICLE PHASE
SELECT VEHICLE OVERLAP (A=1,P=161)...7
SELECT COLOR (0=RED,1=YEL,2=GRN).....2
```

WHEN A 'Y' IS ENTERED FOR 'VEHICLE OVERLAP' THE SCREEN SHOWN ABOVE WILL APPEAR. ENTER DATA AS SHOWN.

PRESS THE 'ENT' AFTER AFTER INPUTING DATA, THEN 'ESC'.

DISPLAY WILL NOW SHOW THE SPECIFIED OUTPUT ASSIGNED AS 'VEHICLE OVERLAP' AS SHOWN BELOW.

```
PAGE:1  C1 PIN:23   VEHICLE OVERLAP
OUTPUT ASSIGNMENT #.................21
FREQUENCY (0=DEFAULT) (0-25.5 HZ)...0.0
DUTY CYCLE (0=DEFAULT) (0 - 100%)...0
MODE (0=SOLID,1=FLASH)..............1
SELECT ASSIGNMENT:
NOT ENABLED.........................
VEHICLE PHASE.......................
PEDESTRIAN PHASE....................
VEHICLE OVERLAP.....................Y
PEDESTRIAN OVERLAP..................
WATCHDOG............................
DETECTOR RESET......................
ADVANCE BEACON......................
OUT OF PHASE FLASHER................
CONTROLLER FLASH....................
RUN FREE............................
RESERVED............................
PREEMPT.............................
SOFT PREEMPT........................
ANY PREEMPT.........................
COORDINATION PLAN...................
OFFSET..............................
PHASE CHECK.........................
PHASE ON............................
PHASE NEXT..........................
```

OUTPUT PROGRAMMING COMPLETE

ALTERNATE PHASING ACTIVATION DETAIL

TO RUN ALT. PHASING DURING FREE RUN - PROGRAM CHANGES (SHOWN BELOW) IN SEPARATE TIME OF DAY EVENTS. IF PAGE 1 IS USED. NO EVENT PROGRAMMING IS NECESSARY FOR THAT PARTICULAR PAGE.

TO RUN ALT. PHASING DURING COORDINATION - SELECT ALL PAGE CHANGES (AS SHOWN BELOW) WITHIN COORDINATION PLAN PROGRAMMING.

PHASING	INPUTS PAGE	OVERLAPS PAGE
ACTIONS REQUIRED TO RUN DEFAULT PHASING	1	1
ACTIONS REQUIRED TO RUN ALTERNATE PHASING	2	2

NOTE: PAGES NOT SHOWN (i.e. sequence, phase control, etc.) SHOULD REMAIN AS '1', OR AS DEFINED BY TIMING ENGINEER.

IMPORTANT: IF ALT. PHASING IS USED DURING FREE RUN AND COORDINATION, DO NOT OPERATE TIME OF DAY EVENTS CONCURRENTLY WITH COORDINATION PLAN EVENTS IN THE EVENT SCHEDULER. (EX. FREE RUN EVENT SHOULD END BEFORE COORDINATION PLAN EVENT STARTS AND VICE-VERSA).

ALTERNATE PHASING CHANGE SUMMARY

THE FOLLOWING IS A SUMMARY OF WHAT TAKES PLACE WHEN SF BIT 1 AND VEH DET PLAN 2 ACTIVATE TO CALL THE "ALTERNATE PHASING":

OVERLAPS PAGE 2: Modifies overlap parent phase for heads 31 and 32 to run protected turns only.

INPUTS PAGE 2: Reduces delay time for phase 3 call on loop 3A to 0 seconds.

THIS ELECTRICAL DETAIL IS FOR
THE SIGNAL DESIGN: 03-1153
DESIGNED: Nov 2019
SEALED: 11-25-2019
REVISED: N/A

Electrical Detail
Sheet 4 of 4

DOCUMENT NOT CONSIDERED FINAL UNLESS ALL SIGNATURES COMPLETED

ELECTRICAL AND PROGRAMMING DETAILS FOR:

US 74 (Eastwood Road) at Drysdale Drive

Division 3 New Hanover County Wilmington

PLAN DATE:	November 2019	REVIEWED BY:	WJ Hamilton	
PREPARED BY:	A. Andrews	RKA PROJ. NO:	19258 (040)	
REVISIONS			INIT.	DATE

SEAL
NORTH CAROLINA PROFESSIONAL SEAL 32396 ENGINEER WILLIAM J. HAMILTON
DocuSigned by: William J. Hamilton
SIGNATURE 11/25/19 DATE
SIG. INVENTORY NO. 03-1153

Prepared in the offices of:
RAMEY KEMP & ASSOCIATES, INC.
Transportation Engineers
5808 Faringdon Place, Suite 100
Raleigh, North Carolina 27609
919-872-5115 Tel. 919-878-5416 Fax.
www.rameykemp.com, NC License No. C-0910

750 N.Greenfield Pkwy,Garner,NC 27529

11/25/2019
11:42:20 a
User:jstiff

DocuSign Envelope ID: 8BEE47C3-CECA-4717-8B72-8C77D2788807

PROJECT REFERENCE NO.	SHEET NO.
U-5710A	Sig-4.0

DEFAULT PHASING DIAGRAM

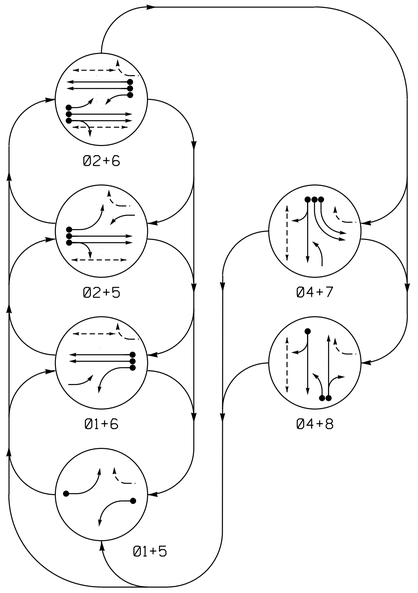

ALTERNATE PHASING DIAGRAM

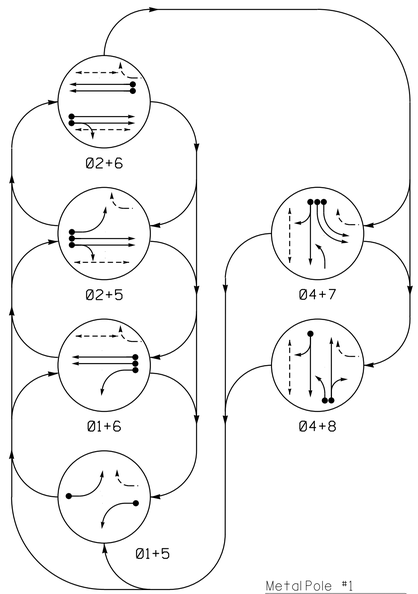

SIGNAL FACE I.D.

All Heads L.E.D.

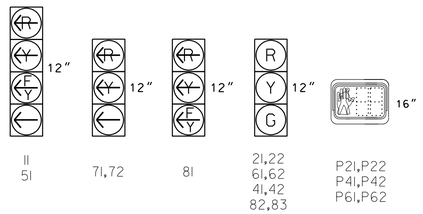

11 51 | 71,72 | 81 | 21,22 61,62 41,42 82,83 | P21,P22 P41,P42 P61,P62

OASIS 2070 LOOP & DETECTOR INSTALLATION CHART												
INDUCTIVE LOOPS					DETECTOR PROGRAMMING							
LOOP	SIZE (FT)	DISTANCE FROM STOPBAR (FT)	TURNS	NEW LOOP	PHASE	CALLING	EXTENSION	FULL TIME DELAY	STRETCH TIME	DELAY TIME	SYSTEM LOOP	NEW CARD
1A	6X40	0	2-4-2	Y	1	Y	Y	-	-	10*	-	Y
					6**	Y	Y	-	-	-	-	Y
2A	6X6	200	5	Y	2	Y	Y	-	-	-	-	Y
2B	6X6	200	5	Y	2	Y	Y	-	-	-	-	Y
4A	6X40	0	2-4-2	Y	4	Y	Y	-	-	10	-	Y
5A	6X40	0	2-4-2	Y	5	Y	Y	-	-	10*	-	Y
					2**	Y	Y	-	-	-	-	Y
6A	6X6	200	5	Y	6	Y	Y	-	-	-	-	Y
6B	6X6	200	5	Y	6	Y	Y	-	-	-	-	Y
7A	6X40	0	2-4-2	Y	7	Y	Y	-	-	-	-	Y
7B	6X40	0	2-4-2	Y	7	Y	Y	-	-	-	-	Y
8A	6X40	0	2-4-2	Y	8	Y	Y	-	-	-	-	Y
8B	6X40	0	2-4-2	Y	8	Y	Y	-	-	10	-	Y

* Disable delay during Alternate Phasing operation.
** Disable phase call for loop during Alternate Phasing operation.

6 Phase Fully Actuated (Wilmington Signal System)

1. Refer to "Roadway Standard Drawings NCDOT" dated January 2018, "Standard Specifications for Roads and Structures" dated January 2018.
2. Do not program signal for late night flashing operation unless otherwise directed by the Engineer.
3. Phase 1 and/or phase 5 may be lagged.
4. Phase 7 may be lagged.
5. Set all detector units to presence mode.
6. Locate new cabinet so as not to obstruct sight distance of vehicles turning right on red.
7. Omit "WALK" and flashing "DON'T WALK" with no pedestrian calls.
8. Program the pedestrian heads to countdown the flashing "DON'T WALK" time only.
9. The Division (City) Traffic Engineer will determine the hours of use for each phasing plan.
10. Maximum times shown in timing chart are for free-run operation only. Coordinated signal system timing values supersede these values.
11. Signal system data:
    Controller Asset #1152.
12. Refer to pavement marking plans for stop bar and crosswalk location.
13. Metal poles/mast arms and Type II pedestals shall be black powder-coated.

PHASING DIAGRAM DETECTION LEGEND

- DETECTED MOVEMENT
- UNDETECTED MOVEMENT (OVERLAP)
- UNSIGNALIZED MOVEMENT
- PEDESTRIAN MOVEMENT

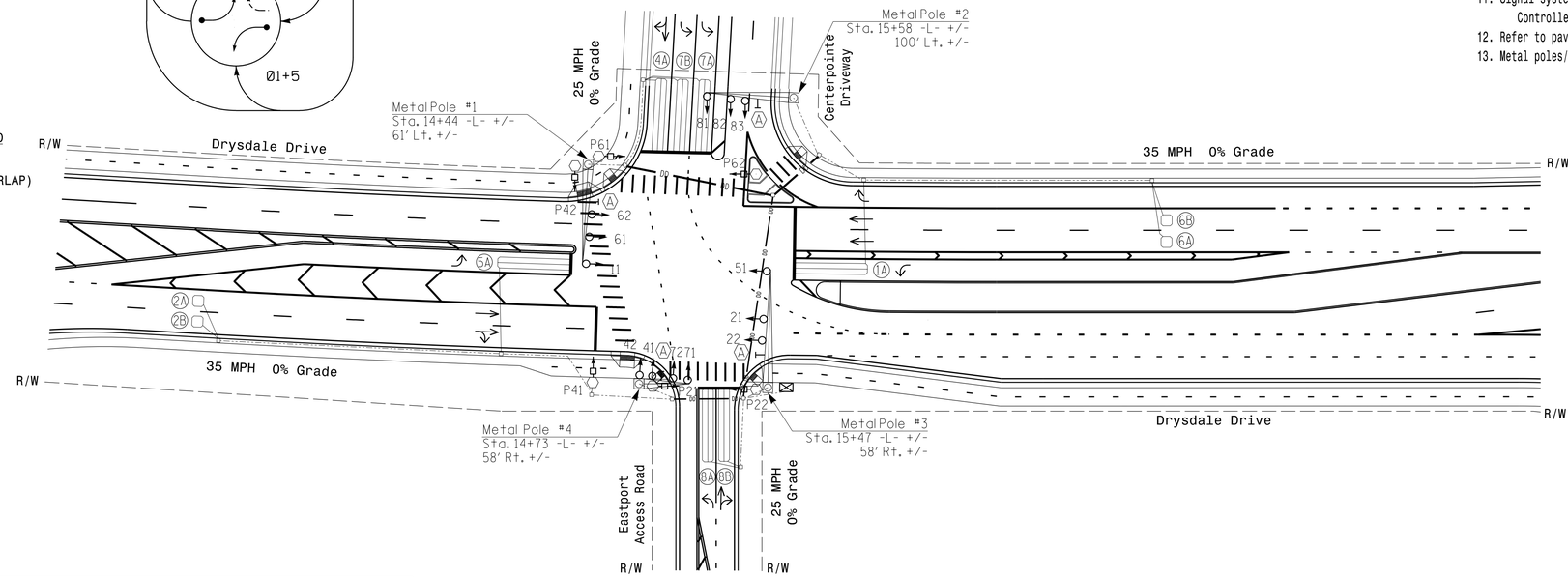

LEGEND

PROPOSED		EXISTING
	Traffic Signal Head	
	Modified Signal Head	N/A
	Sign	
	Pedestrian Signal Head With Push Button & Sign	
	Signal Pole with Guy	
	Signal Pole with Sidewalk Guy	
	Inductive Loop Detector	
	Controller & Cabinet	
	Junction Box	
	2-in Underground Conduit	
N/A	Right of Way	
	Directional Arrow	
	Metal Strain Pole	
N/A	Curb Ramp	
	Metal Pole with Mastarm	
	Directional Drill	N/A
	Type II Signal Pedestal	
A	Street Name Sign (By Others)	A

OASIS 2070 TIMING CHART

FEATURE	PHASE 1	2	4	5	6	7	8
Min Green 1 *	5	12	5	5	12	5	5
Extension 1 *	2.0	6.0	2.0	2.0	6.0	2.0	2.0
Max Green 1 *	15	100	25	15	100	15	25
Yellow Clearance	3.0	3.8	3.2	3.0	3.8	3.0	3.2
Red Clearance	2.8	2.4	3.2	3.2	2.4	3.2	3.1
Walk 1 *	-	7	7	-	7	-	-
Don't Walk 1	-	11	23	-	18	-	-
Seconds Per Actuation *	-	1.5	-	-	1.5	-	-
Max Variable Initial *	-	24	-	-	24	-	-
Time Before Reduction *	-	15	-	-	15	-	-
Time To Reduce *	-	30	-	-	30	-	-
Minimum Gap	-	3.0	-	-	3.0	-	-
Recall Mode	-	MIN RECALL	-	-	MIN RECALL	-	-
Vehicle Call Memory	-	YELLOW	-	-	YELLOW	-	-
Dual Entry	-	-	ON	-	-	-	-
Simultaneous Gap	ON	ON	ON	ON	ON	ON	ON

* These values may be field adjusted. Do not adjust Min Green and Extension times for phases 2 and 6 lower than what is shown. Min Green for all other phases should not be lower than 4 seconds.

DEFAULT PHASING TABLE OF OPERATION

SIGNAL FACE	PHASE 01+5	01+6	02+5	02+6	04+7	04+8	FLASH
11	←-	←-	F/Y	F/Y	-R	-R	-Y
21,22	R	R	G	G	R	R	Y
41,42	R	R	R	G	G	R	
51	←-	F/Y	←-	F/Y	-R	-R	-Y
61,62	R	G	R	G	R	R	Y
71,72	-R	-R	-R	-R	←-	-R	-R
81	-R	-R	-R	-R	F/Y	F/Y	-R
82,83	R	R	R	R	R	G	R
P21,P22	DW	DW	W	W	DW	DW	DRK
P41,P42	DW	DW	DW	DW	W	W	DRK
P61,P62	DW	W	DW	W	DW	DW	DRK

ALTERNATE PHASING TABLE OF OPERATION

SIGNAL FACE	PHASE 01+5	01+6	02+5	02+6	04+7	04+8	FLASH
11	←-	←-	-R	-R	-R	-R	-Y
21,22	R	R	G	G	R	R	Y
41,42	R	R	R	R	G	G	R
51	←-	-R	←-	-R	-R	-R	-Y
61,62	R	G	R	G	R	R	Y
71,72	-R	-R	-R	-R	←-	-R	-R
81	-R	-R	-R	-R	F/Y	F/Y	-R
82,83	R	R	R	R	R	G	R
P21,P22	DW	DW	W	W	DW	DW	DRK
P41,P42	DW	DW	DW	DW	W	W	DRK
P61,P62	DW	W	DW	W	DW	DW	DRK

New Installation

Prepared in the offices of:
RAMEY KEMP & ASSOCIATES, INC.
Transportation Engineers
5808 Faringdon Place, Suite 100
Raleigh, North Carolina 27609
919-872-5115 Tel. 919-878-5416 Fax.
www.rameykemp.com, NC License No. C-0910

Prepared for: Transportation Mobility and Safety Division, North Carolina Department of Transportation, Signal Design Section
750 N.Greenfield Pkwy,Garner,NC 27529

SCALE 0 40 1"=40'

Drysdale Drive at Centerpointe/Eastport Access

Division 3 New Hanover County Wilmington

PLAN DATE: November 2019 REVIEWED BY: WJ Hamilton
PREPARED BY: A. Andrews RKA PROJ. NO.: 19258 (040)

REVISIONS	INIT.	DATE

DOCUMENT NOT CONSIDERED FINAL UNLESS ALL SIGNATURES COMPLETED

SEAL
NORTH CAROLINA PROFESSIONAL SEAL 32396 ENGINEER WILLIAM J. HAMILTON

DocuSigned by: William J. Hamilton
SIGNATURE
11/25/19
DATE

SIG. INVENTORY NO. 03-1152

11/25/2019
...\04-Design\03-1152_sig.dgn
User:jstiff

DocuSign Envelope ID: 8BEE47C3-CECA-4717-8B72-8C77D2788807

EDI MODEL 2018ECLip-NC CONFLICT MONITOR PROGRAMMING DETAIL

(remove jumpers and set switches as shown)

REMOVE DIODE JUMPERS I-5, I-6, I-9, I-11, I-15, 2-5, 2-6, 2-9, 2-11, 2-13, 2-15, 4-7, 4-8, 4-10, 4-14, 5-9, 5-11, 5-13, 6-9, 6-11, 6-13, 6-15, 7-10, 7-14, 8-10, 8-14, 9-11, 9-13, 9-15, 10-14, 11-13, 11-15 AND 13-15.

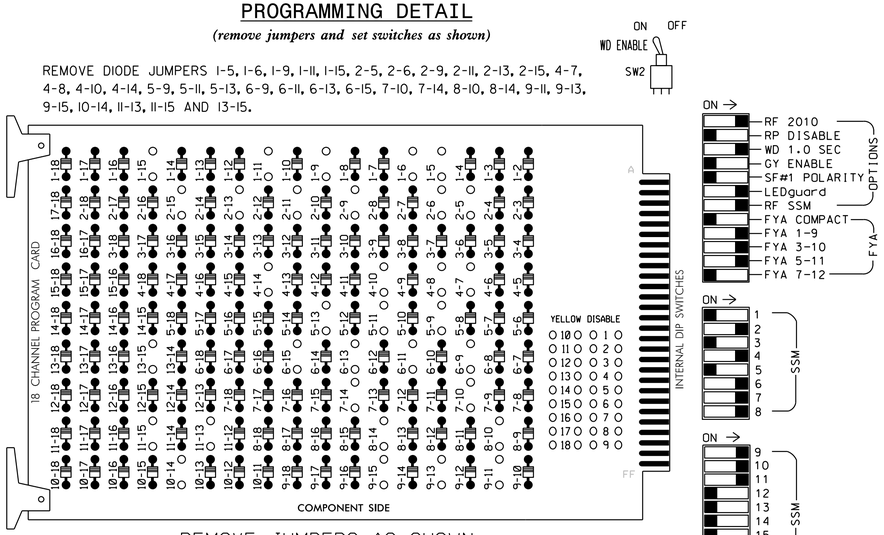

REMOVE JUMPERS AS SHOWN

NOTES:

1. Card is provided with all diode jumpers in place. Removal of any jumper allows its channels to run concurrently.
2. Ensure jumpers SEL2-SEL5 and SEL9 are present on the monitor board.
3. Ensure that Red Enable is active at all times during normal operation.
4. Integrate monitor with Ethernet network in cabinet.

■ = DENOTES POSITION OF SWITCH

NOTES

1. To prevent "flash-conflict" problems, insert red flash program blocks for all unused vehicle load switches in the output file. The installer shall verify that signal heads flash in accordance with the Signal Plans.
2. Program phase 4 for Dual Entry.
3. Program phases 2 and 6 for Variable Initial and Gap Reduction.
4. Enable Simultaneous Gap-Out for all phases.
5. Program phases 2 and 6 for Startup In Green.
6. Program phases 2, 4 and 6 for Startup Ped Call.
7. Program phases 2 and 6 for Yellow Flash and overlaps 1 and 2 as Wag Overlaps.
8. The cabinet and controller are part of the Wilmington Signal System.

PROJECT REFERENCE NO.	SHEET NO.
U-5710A	Sig-4.1

SIGNAL HEAD HOOK-UP CHART

LOAD SWITCH NO.	S1	S2	S3	S4	S5	S6	S7	S8	S9	S10	S11	S12	AUX S1	AUX S2	AUX S3	AUX S4	AUX S5	AUX S6
CMU CHANNEL NO.	1	2	13	3	4	14	5	6	15	7	8	16	9	10	17	11	12	18
PHASE	1	2	2 PED	3	4	4 PED	5	6	6 PED	7	8	8 PED	OLA	OLB	SPARE	OLC	OLD	SPARE
SIGNAL HEAD NO.	11 ★	21,22	P21, P22	NU	41,42	P41, P42	51 ★	61,62	P61, P62	71,72	82,83	NU	11 ★	81 ★	NU	51 ★	NU	NU
RED		128			101			134			107							
YELLOW	✳	129			102		✳	135			108							
GREEN		130			103			136			109							
RED ARROW									122			A121	A124		A114			
YELLOW ARROW									123			A122	A125		A115			
FLASHING YELLOW ARROW												A123	A126		A116			
GREEN ARROW	127						133			124								
✋			113			104			119									
🚶			115			106			121									

NU = Not Used

✳ Denotes install load resistor. See load resistor installation detail this sheet.

★ See pictorial of head wiring in detail below.

EQUIPMENT INFORMATION

CONTROLLER.....2070E
CABINET.....332 /W/ AUX
SOFTWARE.....ECONOLITE OASIS
CABINET MOUNT.....BASE
OUTPUT FILE POSITIONS...18 WITH AUX. OUTPUT FILE
LOAD SWITCHES USED.....S1,S2,S3,S5,S6,S7,S8,S9,S10,S11,AUX S1, AUX S2,AUX S4
PHASES USED.....1,2,2PED,4,4PED,5,6,6PED,7,8
OVERLAP "A".....1+2
OVERLAP "B".....4
OVERLAP "C".....5+6
OVERLAP "D".....NOT USED

FYA SIGNAL WIRING DETAIL

(wire signal heads as shown)

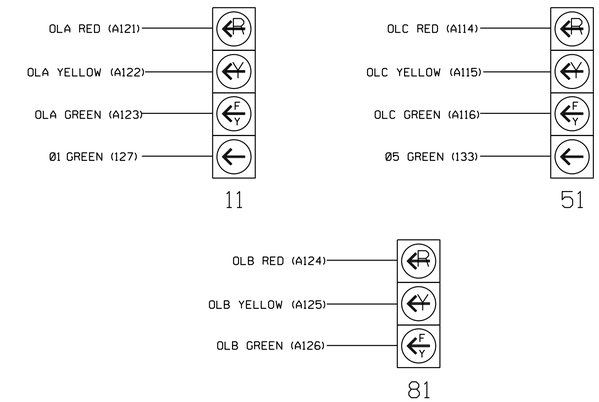

NOTE

1. The sequence display for signal heads 11 and 51 requires special programming. See sheet 2 for programming instructions.

INPUT FILE POSITION LAYOUT

(front view)

		1	2	3	4	5	6	7	8	9	10	11	12	13	14
FILE "I"	U	Ø 1 1A	Ø 2 2A	SLOT EMPTY	WIRED ⊗ INPUT	SLOT EMPTY	Ø 4 4A	SLOT EMPTY	SLOT EMPTY	SLOT EMPTY	SLOT EMPTY	SLOT EMPTY	SLOT EMPTY	Ø 2PED DC ISOLATOR	Ø 6PED DC ISOLATOR	FS DC ISOLATOR
	L	NOT USED	Ø 2 2B				NOT USED						Ø 4PED DC ISOLATOR	NOT USED	ST DC ISOLATOR
FILE "J"	U	Ø 5 5A	Ø 6 6A	SLOT EMPTY	WIRED ⊗ INPUT	Ø 7 7A	Ø 7 7B	Ø 8 8B	SLOT EMPTY	SLOT EMPTY	SLOT EMPTY	SLOT EMPTY	SLOT EMPTY	SLOT EMPTY	SLOT EMPTY	SLOT EMPTY
	L	NOT USED	Ø 6 6B			NOT USED	Ø 8 8A	NOT USED								

EX.: 1A, 2A, ETC. = LOOP NO.'S

FS = FLASH SENSE
ST = STOP TIME

⊗ Wired Input - Do not populate slot with detector card

INPUT FILE CONNECTION & PROGRAMMING CHART

LOOP NO.	LOOP TERMINAL	INPUT FILE POS.	PIN NO.	INPUT ASSIGNMENT NO.	DETECTOR NO.	NEMA PHASE	CALL	EXTEND	FULL TIME DELAY	STRETCH TIME	DELAY TIME
1A[1]	TB2-1,2	I1U	56	18	1	1	Y	Y			10
	-	J4U	48	10 ★	26	6	Y	Y			
	-	I1U	56	18 ★	51	1	Y	Y			
2A	TB2-5,6	I2U	39	1	2	2	Y	Y			
2B	TB2-7,8	I2L	43	5	12	2	Y	Y			
4A	TB4-9,10	I6U	41	3	4	4	Y	Y			10
5A[2]	TB3-1,2	J1U	55	17	5	5	Y	Y			10
	-	I4U	47	9 ★	22	2	Y	Y			
	-	J1U	55	17 ★	55	5	Y	Y			
6A	TB3-5,6	J2U	40	2	6	6	Y	Y			
6B	TB3-7,8	J2L	44	6	16	6	Y	Y			
7A	TB5-5,6	J5U	57	19	7	7	Y	Y			
7B	TB5-9,10	J6U	42	4	8	7	Y	Y			
8A	TB5-11,12	J6L	46	8	18	8	Y	Y			
8B	TB7-1,2	J7U	66	28	38	8	Y	Y			10
PED PUSH BUTTONS											
P21,P22	TB8-4,6	I12U	67	29	PED 2	2 PED					
P41,P42	TB8-5,6	I12L	69	31	PED 4	4 PED					
P61,P62	TB8-7,9	I13U	68	30	PED 6	6 PED					

NOTE:
INSTALL DC ISOLATORS IN INPUT FILE SLOTS I12 AND I13.

[1] Add jumper from I1-W to J4-W, on rear of input file.

[2] Add jumper from J1-W to I4-W, on rear of input file.

★ See Input Page Assignment programming details on sheets 3 and 4.

INPUT FILE POSITION LEGEND: J2L
FILE J
SLOT 2
LOWER

LOAD RESISTOR INSTALLATION DETAIL

(install resistors as shown below)

ACCEPTABLE VALUES	
VALUE (ohms)	WATTAGE
1.5K - 1.9K	25W (min)
2.0K - 3.0K	10W (min)

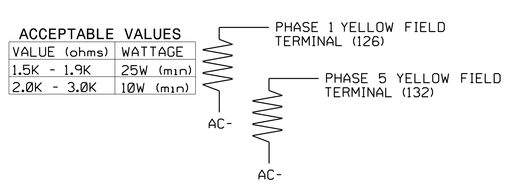

COUNTDOWN PEDESTRIAN SIGNAL OPERATION

Countdown Ped Signals are required to display timing only during Ped Clearance Interval. Consult Ped Signal Module user's manual for instructions on selecting this feature.

THIS ELECTRICAL DETAIL IS FOR THE SIGNAL DESIGN: 03-1152
DESIGNED: Nov 2019
SEALED: 11/25/19
REVISED: N/A

Prepared in the offices of:
RAMEY KEMP & ASSOCIATES, INC.
Transportation Engineers
5808 Faringdon Place, Suite 100
Raleigh, North Carolina 27609
919-872-5115 Tel, 919-878-5416 Fax.
www.rameykemp.com, NC License No. C-0910

Electrical Detail
Sheet 1 of 5

DOCUMENT NOT CONSIDERED FINAL UNLESS ALL SIGNATURES COMPLETED

ELECTRICAL AND PROGRAMMING DETAILS FOR:

NC Department of Transportation Mobility and Safety Division Traffic Engineering Branch Signals Management Section

750 N.Greenfield Pkwy.Garner,NC 27529

Drysdale Drive at Centerpointe/Eastport Access

Division 3 New Hanover County Wilmington

PLAN DATE:	November 2019	REVIEWED BY:	WJ Hamilton
PREPARED BY:	A. Andrews	RKA PROJ. NO.:	19258 (040)

REVISIONS	INIT.	DATE

SEAL
NORTH CAROLINA PROFESSIONAL SEAL 32396 ENGINEER WILLIAM J. HAMILTON
DocuSigned by: William J. Hamilton
SIGNATURE
11/25/19
DATE
SIG. INVENTORY NO. 03-1152

11/25/2019
ramey kemp
User: jstaff

DocuSign Envelope ID: 8BEE47C3-CECA-4717-8B72-8C77D2788807

PROJECT REFERENCE NO.	SHEET NO.
U-5710A	Sig-4.2

LOGICAL I/O PROCESSOR PROGRAMMING DETAIL
TO PRODUCE SPECIAL FYA-PPLT SIGNAL SEQUENCE

(program controller as shown below)

1. FROM MAIN MENU PRESS '2' (PHASE CONTROL), THEN '1' (PHASE CONTROL FUNCTIONS). SCROLL TO THE BOTTOM OF THE MENU AND ENABLE ACT LOGIC COMMANDS 1, 2, 3, 4, 5 AND 6.

2. FROM MAIN MENU PRESS '6' (OUTPUTS), THEN '3' (LOGICAL I/O PROCESSOR).

LOGICAL I/O COMMAND #1 (+/-COMMAND#)
IF ACTIVE PHASE #1 IS ON
AND RED CLEAR ON PHASE #1 IS ON

SCROLL DOWN

THEN:
SET OUTPUT ASSIGNMENT #50 ON
SET OUTPUT ASSIGNMENT #51 OFF

PRESS '+'

NOTE: LOGIC FOR PHASE 1 RED CLEAR WHEN TRANSITIONING FROM PHASE 1 TO PHASE 2 (HEAD 11).

LOGICAL I/O COMMAND #2 (+/-COMMAND#)
IF ACTIVE PHASE #1 IS ON

SCROLL DOWN

THEN:
SET OUTPUT ASSIGNMENT #52 OFF

PRESS '+'

NOTE: LOGIC FOR SWITCHING FLASHING YELLOW ARROW "OFF" DURING PHASE 1 (HEAD 11).

LOGICAL I/O COMMAND #3 (+/-COMMAND#)
IF YELLOW ON PHASE #1 IS ON

SCROLL DOWN

THEN:
SET OUTPUT ASSIGNMENT #51 ON

PRESS '+'

NOTE: LOGIC FOR YELLOW ARROW CLEARANCE FROM PHASE 1 (HEAD 11).

LOGICAL I/O COMMAND #4 (+/-COMMAND#)
IF ACTIVE PHASE #5 IS ON
AND RED CLEAR ON PHASE #5 IS ON

SCROLL DOWN

THEN:
SET OUTPUT ASSIGNMENT #42 ON
SET OUTPUT ASSIGNMENT #43 OFF

PRESS '+'

NOTE: LOGIC FOR PHASE 5 RED CLEAR WHEN TRANSITIONING FROM PHASE 5 TO PHASE 6 (HEAD 51).

LOGICAL I/O COMMAND #5 (+/-COMMAND#)
IF ACTIVE PHASE #5 IS ON

SCROLL DOWN

THEN:
SET OUTPUT ASSIGNMENT #44 OFF

PRESS '+'

NOTE: LOGIC FOR SWITCHING FLASHING YELLOW ARROW "OFF" DURING PHASE 5 (HEAD 51).

LOGICAL I/O COMMAND #6 (+/-COMMAND#)
IF YELLOW ON PHASE #5 IS ON

SCROLL DOWN

THEN:
SET OUTPUT ASSIGNMENT #43 ON

NOTE: LOGIC FOR YELLOW ARROW CLEARANCE FROM PHASE 5 (HEAD 51).

LOGIC I/O PROCESSOR PROGRAMMING COMPLETE

OUTPUT REFERENCE SCHEDULE

OUTPUT 42 = Overlap C Red
OUTPUT 43 = Overlap C Yellow
OUTPUT 44 = Overlap C Green
OUTPUT 50 = Overlap A Red
OUTPUT 51 = Overlap A Yellow
OUTPUT 52 = Overlap A Green

THIS ELECTRICAL DETAIL IS FOR
THE SIGNAL DESIGN: 03-1152
DESIGNED: Nov 2019
SEALED: 11-25-2019
REVISED: N/A

11/25/2019
J:\projects\dgn\03-1152_elec2.dgn
User:istiff

ALTERNATE PHASING ACTIVATION DETAIL

TO RUN ALT. PHASING DURING COORDINATION - SELECT ALL PAGE CHANGES (AS SHOWN BELOW) WITHIN COORDINATION PLAN PROGRAMMING.

TO RUN ALT. PHASING DURING FREE RUN - PROGRAM PAGE CHANGES (SHOWN BELOW) IN SEPARATE TIME OF DAY EVENTS. IF PAGE 1 IS USED, NO EVENT PROGRAMMING IS NECESSARY FOR THAT PARTICULAR PAGE.

PHASING	INPUTS PAGE	OVERLAPS PAGE
ACTIVE PAGES REQUIRED TO RUN DEFAULT PHASING	1	1
ACTIVE PAGES REQUIRED TO RUN ALTERNATE PHASING	2	2

NOTE: PAGES NOT SHOWN (i.e. sequence, phase control, etc.) SHOULD REMAIN AS '1', OR AS DEFINED BY TIMING ENGINEER.

IMPORTANT: IF ALT. PHASING IS USED DURING FREE RUN AND COORDINATION, DO NOT OPERATE TIME OF DAY PAGE CHANGE EVENTS CONCURRENTLY WITH COORDINATION PLAN EVENTS IN THE EVENT SCHEDULER. (EX. FREE RUN PAGE CHANGE EVENT SHOULD END BEFORE COORDINATION PLAN EVENT STARTS AND VICE-VERSA).

ALTERNATE PHASING PAGE CHANGE SUMMARY

THE FOLLOWING IS A SUMMARY OF WHAT TAKES PLACE WHEN THESE OVERLAP/INPUT PAGE CHANGES ACTIVATE TO CALL THE "ALTERNATE PHASING":

OVERLAPS PAGE 2: Modifies overlap parent phases for heads 11 and 51 to run protected turns only.

INPUTS PAGE 2: Disables phase 6 call on loop 1A and reduces delay time for phase 1 call on loop 1A to 0 seconds.

Disables phase 2 call on loop 5A and reduces delay time for phase 5 call on loop 5A to 0 seconds.

Electrical Detail
Sheet 2 of 5

DOCUMENT NOT CONSIDERED FINAL UNLESS ALL SIGNATURES COMPLETED

Prepared in the offices of:
RAMEY KEMP & ASSOCIATES, INC.
Transportation Engineers
5808 Faringdon Place, Suite 100
Raleigh, North Carolina 27609
919-872-5115 Tel. 919-878-5416 Fax.
www.rameykemp.com, NC License No. C-0910

ELECTRICAL AND PROGRAMMING DETAILS FOR:
NC Transportation Mobility and Safety Division
Traffic Engineering Branch
Traffic Signals Management Section
750 N.Greenfield Pkwy,Garner,NC 27529

Drysdale Drive
at
Centerpointe/Eastport Access

Division 3 New Hanover County Wilmington

PLAN DATE:	November 2019	REVIEWED BY:	WJ Hamilton
PREPARED BY:	A. Andrews	RKA PROJ. NO.:	19258 (040)

REVISIONS	INIT.	DATE

SEAL
NORTH CAROLINA PROFESSIONAL SEAL 32396 ENGINEER WILLIAM J. HAMILTON

DocuSigned by: William J. Hamilton
A0560D704648484
SIGNATURE 11/25/19 DATE

SIG. INVENTORY NO. 03-1152

DocuSign Envelope ID: 8BEE47C3-CECA-4717-8B72-8C77D2788807

PROJECT REFERENCE NO.	SHEET NO.
U-5710A	Sig-4.3

INPUT PAGE 2 ASSIGNMENT PROGRAMMING DETAIL FOR ALTERNATE PHASING - LOOP 1A

(program controller as shown below)

NOTES: 1. THIS PROGRAMMING APPLIES FOR INPUT PAGE 2 ONLY. INPUT PAGE 1 WILL USE STANDARD DEFAULT SETTINGS. THIS PROGRAMMING IS NECESSARY FOR PROPER DETECTOR OPERATION DURING ALTERNATE PHASING OPERATION.

2. THE FIRST TASK THIS PROGRAMMING ACCOMPLISHES IS THE DISABLING OF INPUT #10 (DETECTOR 26) SO THAT A VEHICLE CALL WILL NOT BE PLACED TO PHASE 6 DURING ALTERNATE PHASING OPERATION. THE SECOND TASK THIS PROGRAMMING ACCOMPLISHES IS THAT IT REASSIGNS DETECTOR 51 TO INPUT #18 SO THAT THE DELAY ON LOOP 1A CAN BE REDUCED FROM 10 SECONDS TO 0 SECONDS.

FROM MAIN MENU PRESS '5' (INPUTS), THEN PRESS 'NEXT' TO GET TO INPUT PAGE '2'. PRESS THE '+' KEY UNTIL INPUT 10 IS REACHED.

```
PAGE: 2 C1 PIN:48  VEHICLE DETECTOR
INPUT ASSIGNMENT #.................10
DEBOUNCE TIME (0-25.5 SEC).........0.5
DELAY TIME (0-25.5 SEC).............0.0
HOLD-OVER TIME (0-25.5 SEC).........0.0
ASSIGNMENT SELECTION:
NOT ENABLED (Y/N)..................Y
VEHICLE DETECTOR (1-64).............26
PEDESTRIAN DETECTOR (1-16).........._
ALTERNATE PED DETECTOR (1-16)......._
PREEMPT (1-10)......................._
INVERTED PREEMPT (1-10).............._
STOP TIME (Y/N)......................_
FLASH SENSE (Y/N)...................._
DOOR OPEN (Y/N)......................_
MANUAL CONTROL ENABLE (Y/N).........._
MANUAL CONTROL ADVANCE (Y/N)........._
SPECIAL FUNCTION ALARM (1-8)........._
TOD HOUR SYCHRONIZATION (0-23)......._
FORCE OFF RING (1-4)................._
HOLD PHASES (1-16)..................._
PLAN (65=FLSH,66=FREE)..._  OFFSET#.._
CHANGE PHASE SEQUENCE PAGE (1-12)...._
CHANGE PHASE TIMING PAGE (1-4)......._
CHANGE PHASE CONTROL PAGE (1-4)......_
CHANGE OVERLAP CONTROL PAGE (1-4)...._
CHANGE INPUT PAGE (1-4).............._
CHANGE OUTPUT PAGE (1-4)............._
OVERRIDE PHASE CONTROL FUNCTION (Y)._
```

→ ENTER A 'Y' FOR NOT ENABLED →

DEFAULT DETECTOR NUMBER WILL REMAIN UNTIL 'NOT ENABLED' IS ENTERED.

(LOOP 1A - PHASE 6)

```
PAGE: 2 C1 PIN:48  NOT ENABLED
INPUT ASSIGNMENT #.................10
DEBOUNCE TIME (0-25.5 SEC).........0.5
DELAY TIME (0-25.5 SEC).............0.0
HOLD-OVER TIME (0-25.5 SEC).........0.0
ASSIGNMENT SELECTION:
NOT ENABLED (Y/N)..................Y
VEHICLE DETECTOR (1-64).............._
PEDESTRIAN DETECTOR (1-16).........._
ALTERNATE PED DETECTOR (1-16)......._
PREEMPT (1-10)......................._
INVERTED PREEMPT (1-10).............._
STOP TIME (Y/N)......................_
FLASH SENSE (Y/N)...................._
DOOR OPEN (Y/N)......................_
MANUAL CONTROL ENABLE (Y/N).........._
MANUAL CONTROL ADVANCE (Y/N)........._
SPECIAL FUNCTION ALARM (1-8)........._
TOD HOUR SYCHRONIZATION (0-23)......._
FORCE OFF RING (1-4)................._
HOLD PHASES (1-16)..................._
PLAN (65=FLSH,66=FREE)..._  OFFSET#.._
CHANGE PHASE SEQUENCE PAGE (1-12)...._
CHANGE PHASE TIMING PAGE (1-4)......._
CHANGE PHASE CONTROL PAGE (1-4)......_
CHANGE OVERLAP CONTROL PAGE (1-4)...._
CHANGE INPUT PAGE (1-4).............._
CHANGE OUTPUT PAGE (1-4)............._
OVERRIDE PHASE CONTROL FUNCTION (Y)._
```

PRESS '+' TO ADVANCE TO INPUT 18

```
PAGE: 2 C1 PIN:56  VEHICLE DETECTOR
INPUT ASSIGNMENT #.................18
DEBOUNCE TIME (0-25.5 SEC).........0.5
DELAY TIME (0-25.5 SEC).............0.0
HOLD-OVER TIME (0-25.5 SEC).........0.0
ASSIGNMENT SELECTION:
NOT ENABLED (Y/N)..................._
VEHICLE DETECTOR (1-64).............1
PEDESTRIAN DETECTOR (1-16).........._
ALTERNATE PED DETECTOR (1-16)......._
PREEMPT (1-10)......................._
INVERTED PREEMPT (1-10).............._
STOP TIME (Y/N)......................_
FLASH SENSE (Y/N)...................._
DOOR OPEN (Y/N)......................_
MANUAL CONTROL ENABLE (Y/N).........._
MANUAL CONTROL ADVANCE (Y/N)........._
SPECIAL FUNCTION ALARM (1-8)........._
TOD HOUR SYCHRONIZATION (0-23)......._
FORCE OFF RING (1-4)................._
HOLD PHASES (1-16)..................._
PLAN (65=FLSH,66=FREE)..._  OFFSET#.._
CHANGE PHASE SEQUENCE PAGE (1-12)...._
CHANGE PHASE TIMING PAGE (1-4)......._
CHANGE PHASE CONTROL PAGE (1-4)......_
CHANGE OVERLAP CONTROL PAGE (1-4)...._
CHANGE INPUT PAGE (1-4).............._
CHANGE OUTPUT PAGE (1-4)............._
OVERRIDE PHASE CONTROL FUNCTION (Y)._
```

→ ENTER '51' TO REASSIGN THE VEHICLE DETECTOR FOR THIS INPUT →

(LOOP 1A - PHASE 1)

```
PAGE: 2 C1 PIN:56  VEHICLE DETECTOR
INPUT ASSIGNMENT #.................18
DEBOUNCE TIME (0-25.5 SEC).........0.5
DELAY TIME (0-25.5 SEC).............0.0
HOLD-OVER TIME (0-25.5 SEC).........0.0
ASSIGNMENT SELECTION:
NOT ENABLED (Y/N)..................._
VEHICLE DETECTOR (1-64).............51
PEDESTRIAN DETECTOR (1-16).........._
ALTERNATE PED DETECTOR (1-16)......._
PREEMPT (1-10)......................._
INVERTED PREEMPT (1-10).............._
STOP TIME (Y/N)......................_
FLASH SENSE (Y/N)...................._
DOOR OPEN (Y/N)......................_
MANUAL CONTROL ENABLE (Y/N).........._
MANUAL CONTROL ADVANCE (Y/N)........._
SPECIAL FUNCTION ALARM (1-8)........._
TOD HOUR SYCHRONIZATION (0-23)......._
FORCE OFF RING (1-4)................._
HOLD PHASES (1-16)..................._
PLAN (65=FLSH,66=FREE)..._  OFFSET#.._
CHANGE PHASE SEQUENCE PAGE (1-12)...._
CHANGE PHASE TIMING PAGE (1-4)......._
CHANGE PHASE CONTROL PAGE (1-4)......_
CHANGE OVERLAP CONTROL PAGE (1-4)...._
CHANGE INPUT PAGE (1-4).............._
CHANGE OUTPUT PAGE (1-4)............._
OVERRIDE PHASE CONTROL FUNCTION (Y)._
```

PROGRAMMING COMPLETE

SPECIAL DETECTOR PROGRAMMING DETAIL - LOOP 1A (ALT.)

(program controller as shown below)

FROM MAIN MENU PRESS '7' (DETECTORS), THEN PRESS '1' FOR VEHICLE DETECTORS. PRESS THE '-' KEY TO GET TO VEHICLE DETECTOR #51.

```
VEHICLE DETECTOR #51  SETTINGS (+-,1-64)
SETTING:                          (Y/N)
ENABLE DETECTOR.....................N
ENABLE LOGGING......................N
ENABLE DIAGNOSTICS..................N
SPEED TRAP..........................N
CALL DETECTOR.......................Y
EXTENSION DETECTOR..................Y
MODE 2 STOP BAR.....................N
SWITCHING DETECTOR..................N
DUPLICATING DETECTOR................N
ENABLE FULL TIME DELAY..............N
IF FAILED, SET MIN RECALL?..........N
IF FAILED, SET MAX1 RECALL?.........N
IF FAILED, SET MAX2 RECALL?.........N
PHASE#          ¦12345678910111213141516
PHASES ASSIGNED ¦
SWITCH/DUPLICATE¦
LOOP SIZE (0-255 FT).................6
SPEED TRAP DISTANCE (0-255 FT)......0
STOP BAR TIME (0-255 SEC)...........0
STRETCH (0-25.5 SEC)................0.0
DELAY (0-255 SEC)...................0
MAX CALLS/MIN (0-255)..............255
MIN CALLS/DIAGNOSTIC PERIOD (0-255).0
MAX OCCUPANCY (0-100%).............100
EXTENSION DISABLE TIME (0-255 SEC)..0
QUEUE MAX OCCUPANCY TIME (0-255)....0
QUEUE GAP RESET TIME (0-25.5).......0.0
PREEMPTION INDEX FOR QUEUE (0-10)...0
```

→ ENTER 'Y' FOR ENABLE DETECTOR →

→ ENTER '1' FOR PHASES ASSIGNED →

→ ENSURE DELAY IS '0' →

```
VEHICLE DETECTOR #51  SETTINGS (+-,1-64)
SETTING:                          (Y/N)
ENABLE DETECTOR.....................Y
ENABLE LOGGING......................N
ENABLE DIAGNOSTICS..................N
SPEED TRAP..........................N
CALL DETECTOR.......................Y
EXTENSION DETECTOR..................Y
MODE 2 STOP BAR.....................N
SWITCHING DETECTOR..................N
DUPLICATING DETECTOR................N
ENABLE FULL TIME DELAY..............N
IF FAILED, SET MIN RECALL?..........N
IF FAILED, SET MAX1 RECALL?.........N
IF FAILED, SET MAX2 RECALL?.........N
PHASE#          ¦12345678910111213141516
PHASES ASSIGNED ¦X
SWITCH/DUPLICATE¦
LOOP SIZE (0-255 FT).................6
SPEED TRAP DISTANCE (0-255 FT)......0
STOP BAR TIME (0-255 SEC)...........0
STRETCH (0-25.5 SEC)................0.0
DELAY (0-255 SEC)...................0
MAX CALLS/MIN (0-255)..............255
MIN CALLS/DIAGNOSTIC PERIOD (0-255).0
MAX OCCUPANCY (0-100%).............100
EXTENSION DISABLE TIME (0-255 SEC)..0
QUEUE MAX OCCUPANCY TIME (0-255)....0
QUEUE GAP RESET TIME (0-25.5).......0.0
PREEMPTION INDEX FOR QUEUE (0-10)...0
```

DETECTOR PROGRAMMING COMPLETE

NOTE: DETECTOR IS PROGRAMMED PER THE INPUT FILE CONNECTION AND PROGRAMMING CHART SHOWN ON SHEET 1.

THIS ELECTRICAL DETAIL IS FOR THE SIGNAL DESIGN: 03-1152
DESIGNED: Nov 2019
SEALED: 11-25-2019
REVISED: N/A

Electrical Detail
Sheet 3 of 5

DOCUMENT NOT CONSIDERED FINAL UNLESS ALL SIGNATURES COMPLETED

ELECTRICAL AND PROGRAMMING DETAILS FOR:

Drysdale Drive
at
Centerpointe/Eastport Access

Division 3 New Hanover County Wilmington

PLAN DATE:	November 2019	REVIEWED BY:	WJ Hamilton
PREPARED BY:	A. Andrews	RKA PROJ. NO:	19258 (040)

REVISIONS	INIT.	DATE

Prepared in the offices of:
RAMEY KEMP & ASSOCIATES, INC.
Transportation Engineers
5808 Faringdon Place, Suite 100
Raleigh, North Carolina 27609
919-872-5115 Tel. 919-878-5416 Fax.
www.rameykemp.com, NC License No. C-0910

750 N.Greenfield Pkwy,Garner,NC 27529

SEAL
NORTH CAROLINA PROFESSIONAL SEAL 32396 ENGINEER WILLIAM J. HAMILTON
William J. Hamilton 11/25/19
SIGNATURE DATE
SIG. INVENTORY NO. 03-1152

11/25/2019
K:\Projects\Sign\03-1152_ele3.dgn
User:istiff

DocuSign Envelope ID: 8BEE47C3-CECA-4717-8B72-8C77D2788807

PROJECT REFERENCE NO.	SHEET NO.
U-5710A	Sig-4.4

INPUT PAGE 2 ASSIGNMENT PROGRAMMING DETAIL FOR ALTERNATE PHASING - LOOP 5A

(program controller as shown below)

NOTES: 1. THIS PROGRAMMING APPLIES FOR INPUT PAGE 2 ONLY. INPUT PAGE 1 WILL USE STANDARD DEFAULT SETTINGS. THIS PROGRAMMING IS NECESSARY FOR PROPER DETECTOR OPERATION DURING ALTERNATE PHASING OPERATION.

2. THE FIRST TASK THIS PROGRAMMING ACCOMPLISHES IS THE DISABLING OF INPUT #9 (DETECTOR 22) SO THAT A VEHICLE CALL WILL NOT BE PLACED TO PHASE 2 DURING ALTERNATE PHASING OPERATION. THE SECOND TASK THIS PROGRAMMING ACCOMPLISHES IS THAT IT REASSIGNS DETECTOR 55 TO INPUT #17 SO THAT THE DELAY ON LOOP 5A CAN BE REDUCED FROM 10 SECONDS TO 0 SECONDS.

FROM MAIN MENU PRESS '5' (INPUTS), THEN PRESS 'NEXT' TO GET TO INPUT PAGE '2'. PRESS THE '+' KEY UNTIL INPUT 9 IS REACHED.

```
PAGE: 2 C1 PIN:47  VEHICLE DETECTOR
INPUT ASSIGNMENT #.................9
DEBOUNCE TIME (0-25.5 SEC).........0.5
DELAY TIME (0-25.5 SEC).............0.0
HOLD-OVER TIME (0-25.5 SEC).........0.0
ASSIGNMENT SELECTION:
NOT ENABLED (Y/N)...................Y
VEHICLE DETECTOR (1-64).............22
PEDESTRIAN DETECTOR (1-16).........._
ALTERNATE PED DETECTOR (1-16)......._
PREEMPT (1-10)......................._
INVERTED PREEMPT (1-10).............._
STOP TIME (Y/N)......................_
FLASH SENSE (Y/N)...................._
DOOR OPEN (Y/N)......................_
MANUAL CONTROL ENABLE (Y/N).........._
MANUAL CONTROL ADVANCE (Y/N)........._
SPECIAL FUNCTION ALARM (1-8)........._
TOD HOUR SYCHRONIZATION (0-23)......._
FORCE OFF RING (1-4)................._
HOLD PHASES (1-16)..................._
PLAN (65=FLSH,66=FREE)..._  OFFSET#..._
CHANGE PHASE SEQUENCE PAGE (1-12)...._
CHANGE PHASE TIMING PAGE (1-4)......._
CHANGE PHASE CONTROL PAGE (1-4)....._
CHANGE OVERLAP CONTROL PAGE (1-4)...._
CHANGE INPUT PAGE (1-4).............._
CHANGE OUTPUT PAGE (1-4)............._
OVERRIDE PHASE CONTROL FUNCTION (Y)._
```

→ ENTER A 'Y' FOR NOT ENABLED

DEFAULT DETECTOR NUMBER WILL REMAIN UNTIL 'NOT ENABLED' IS ENTERED.

(LOOP 5A - PHASE 2)

```
PAGE: 2 C1 PIN:47  NOT ENABLED
INPUT ASSIGNMENT #.................9
DEBOUNCE TIME (0-25.5 SEC).........0.5
DELAY TIME (0-25.5 SEC).............0.0
HOLD-OVER TIME (0-25.5 SEC).........0.0
ASSIGNMENT SELECTION:
NOT ENABLED (Y/N)...................Y
VEHICLE DETECTOR (1-64).............._
PEDESTRIAN DETECTOR (1-16).........._
ALTERNATE PED DETECTOR (1-16)......._
PREEMPT (1-10)......................._
INVERTED PREEMPT (1-10).............._
STOP TIME (Y/N)......................_
FLASH SENSE (Y/N)...................._
DOOR OPEN (Y/N)......................_
MANUAL CONTROL ENABLE (Y/N).........._
MANUAL CONTROL ADVANCE (Y/N)........._
SPECIAL FUNCTION ALARM (1-8)........._
TOD HOUR SYCHRONIZATION (0-23)......._
FORCE OFF RING (1-4)................._
HOLD PHASES (1-16)..................._
PLAN (65=FLSH,66=FREE)..._  OFFSET#..._
CHANGE PHASE SEQUENCE PAGE (1-12)...._
CHANGE PHASE TIMING PAGE (1-4)......._
CHANGE PHASE CONTROL PAGE (1-4)....._
CHANGE OVERLAP CONTROL PAGE (1-4)...._
CHANGE INPUT PAGE (1-4).............._
CHANGE OUTPUT PAGE (1-4)............._
OVERRIDE PHASE CONTROL FUNCTION (Y)._
```

PRESS '+' TO ADVANCE TO INPUT 17

```
PAGE: 2 C1 PIN:55  VEHICLE DETECTOR
INPUT ASSIGNMENT #.................17
DEBOUNCE TIME (0-25.5 SEC).........0.5
DELAY TIME (0-25.5 SEC).............0.0
HOLD-OVER TIME (0-25.5 SEC).........0.0
ASSIGNMENT SELECTION:
NOT ENABLED (Y/N)...................._
VEHICLE DETECTOR (1-64).............5
PEDESTRIAN DETECTOR (1-16).........._
ALTERNATE PED DETECTOR (1-16)......._
PREEMPT (1-10)......................._
INVERTED PREEMPT (1-10).............._
STOP TIME (Y/N)......................_
FLASH SENSE (Y/N)...................._
DOOR OPEN (Y/N)......................_
MANUAL CONTROL ENABLE (Y/N).........._
MANUAL CONTROL ADVANCE (Y/N)........._
SPECIAL FUNCTION ALARM (1-8)........._
TOD HOUR SYCHRONIZATION (0-23)......._
FORCE OFF RING (1-4)................._
HOLD PHASES (1-16)..................._
PLAN (65=FLSH,66=FREE)..._  OFFSET#..._
CHANGE PHASE SEQUENCE PAGE (1-12)...._
CHANGE PHASE TIMING PAGE (1-4)......._
CHANGE PHASE CONTROL PAGE (1-4)....._
CHANGE OVERLAP CONTROL PAGE (1-4)...._
CHANGE INPUT PAGE (1-4).............._
CHANGE OUTPUT PAGE (1-4)............._
OVERRIDE PHASE CONTROL FUNCTION (Y)._
```

→ ENTER '55' TO REASSIGN THE VEHICLE DETECTOR FOR THIS INPUT

(LOOP 5A - PHASE 5)

```
PAGE: 2 C1 PIN:55  VEHICLE DETECTOR
INPUT ASSIGNMENT #.................17
DEBOUNCE TIME (0-25.5 SEC).........0.5
DELAY TIME (0-25.5 SEC).............0.0
HOLD-OVER TIME (0-25.5 SEC).........0.0
ASSIGNMENT SELECTION:
NOT ENABLED (Y/N)...................._
VEHICLE DETECTOR (1-64).............55
PEDESTRIAN DETECTOR (1-16).........._
ALTERNATE PED DETECTOR (1-16)......._
PREEMPT (1-10)......................._
INVERTED PREEMPT (1-10).............._
STOP TIME (Y/N)......................_
FLASH SENSE (Y/N)...................._
DOOR OPEN (Y/N)......................_
MANUAL CONTROL ENABLE (Y/N).........._
MANUAL CONTROL ADVANCE (Y/N)........._
SPECIAL FUNCTION ALARM (1-8)........._
TOD HOUR SYCHRONIZATION (0-23)......._
FORCE OFF RING (1-4)................._
HOLD PHASES (1-16)..................._
PLAN (65=FLSH,66=FREE)..._  OFFSET#..._
CHANGE PHASE SEQUENCE PAGE (1-12)...._
CHANGE PHASE TIMING PAGE (1-4)......._
CHANGE PHASE CONTROL PAGE (1-4)....._
CHANGE OVERLAP CONTROL PAGE (1-4)...._
CHANGE INPUT PAGE (1-4).............._
CHANGE OUTPUT PAGE (1-4)............._
OVERRIDE PHASE CONTROL FUNCTION (Y)._
```

PROGRAMMING COMPLETE

SPECIAL DETECTOR PROGRAMMING DETAIL - LOOP 5A (ALT.)

(program controller as shown below)

FROM MAIN MENU PRESS '7' (DETECTORS), THEN PRESS '1' FOR VEHICLE DETECTORS. PRESS THE '-' KEY TO GET TO VEHICLE DETECTOR #55.

```
VEHICLE DETECTOR #55  SETTINGS (+-.1-64)
SETTING:                          (Y/N)
ENABLE DETECTOR.....................N
ENABLE LOGGING......................N
ENABLE DIAGNOSTICS..................N
SPEED TRAP..........................N
CALL DETECTOR.......................Y
EXTENSION DETECTOR..................Y
MODE 2 STOP BAR.....................N
SWITCHING DETECTOR..................N
DUPLICATING DETECTOR................N
ENABLE FULL TIME DELAY..............N
IF FAILED, SET MIN RECALL?..........N
IF FAILED, SET MAX1 RECALL?.........N
IF FAILED, SET MAX2 RECALL?.........N
PHASE#          ¦12345678910111213141516
PHASES ASSIGNED ¦
SWITCH/DUPLICATE¦
LOOP SIZE (0-255 FT).................6
SPEED TRAP DISTANCE (0-255 FT)......0
STOP BAR TIME (0-255 SEC)...........0
STRETCH (0-25.5 SEC)................0.0
DELAY (0-255 SEC)...................0
MAX CALLS/MIN (0-255)..............255
MIN CALLS/DIAGNOSTIC PERIOD (0-255).0
MAX OCCUPANCY (0-100%).............100
EXTENSION DISABLE TIME (0-255 SEC)..0
QUEUE MAX OCCUPANCY TIME (0-255)....0
QUEUE GAP RESET TIME (0-25.5).......0.0
PREEMPTION INDEX FOR QUEUE (0-10)...0
```

→ ENTER 'Y' FOR ENABLE DETECTOR

→ ENTER '5' FOR PHASES ASSIGNED

→ ENSURE DELAY IS '0'

```
VEHICLE DETECTOR #55  SETTINGS (+-.1-64)
SETTING:                          (Y/N)
ENABLE DETECTOR.....................Y
ENABLE LOGGING......................N
ENABLE DIAGNOSTICS..................N
SPEED TRAP..........................N
CALL DETECTOR.......................Y
EXTENSION DETECTOR..................Y
MODE 2 STOP BAR.....................N
SWITCHING DETECTOR..................N
DUPLICATING DETECTOR................N
ENABLE FULL TIME DELAY..............N
IF FAILED, SET MIN RECALL?..........N
IF FAILED, SET MAX1 RECALL?.........N
IF FAILED, SET MAX2 RECALL?.........N
PHASE#          ¦12345678910111213141516
PHASES ASSIGNED ¦    X
SWITCH/DUPLICATE¦
LOOP SIZE (0-255 FT).................6
SPEED TRAP DISTANCE (0-255 FT)......0
STOP BAR TIME (0-255 SEC)...........0
STRETCH (0-25.5 SEC)................0.0
DELAY (0-255 SEC)...................0
MAX CALLS/MIN (0-255)..............255
MIN CALLS/DIAGNOSTIC PERIOD (0-255).0
MAX OCCUPANCY (0-100%).............100
EXTENSION DISABLE TIME (0-255 SEC)..0
QUEUE MAX OCCUPANCY TIME (0-255)....0
QUEUE GAP RESET TIME (0-25.5).......0.0
PREEMPTION INDEX FOR QUEUE (0-10)...0
```

DETECTOR PROGRAMMING COMPLETE

NOTE: DETECTOR IS PROGRAMMED PER THE INPUT FILE CONNECTION AND PROGRAMMING CHART SHOWN ON SHEET 1.

THIS ELECTRICAL DETAIL IS FOR THE SIGNAL DESIGN: 03-1152
DESIGNED: Nov 2019
SEALED: 11-25-2019
REVISED: N/A

Electrical Detail
Sheet 4 of 5

DOCUMENT NOT CONSIDERED FINAL UNLESS ALL SIGNATURES COMPLETED

Prepared in the offices of:
RAMEY KEMP & ASSOCIATES, INC.
Transportation Engineers
5808 Faringdon Place, Suite 100
Raleigh, North Carolina 27609
919-872-5115 Tel. 919-878-5416 Fax.
www.rameykemp.com, NC License No. C-0910

ELECTRICAL AND PROGRAMMING DETAILS FOR:

NCDOT Transportation Mobility and Safety Division ITS & Signals Management Section
750 N.Greenfield Pkwy,Garner,NC 27529

Drysdale Drive
at
Centerpointe/Eastport Access

Division 3	New Hanover County	Wilmington
PLAN DATE: November 2019	REVIEWED BY: WJ Hamilton	
PREPARED BY: A. Andrews	RKA PROJ. NO: 19258 (040)	

REVISIONS	INIT.	DATE

SEAL
NORTH CAROLINA PROFESSIONAL SEAL 32396 ENGINEER WILLIAM J. HAMILTON
DocuSigned by: William J. Hamilton 11/25/19
SIGNATURE DATE

SIG. INVENTORY NO. 03-1152

11/25/2019
11:42:20 dgn=03-1152_ele4.dgn
User:jstiff

DocuSign Envelope ID: 8BEE47C3-CECA-4717-8B72-8C77D2788807

PROJECT REFERENCE NO.	SHEET NO.
U-5710A	Sig-4.5

OVERLAP PROGRAMMING DETAIL FOR DEFAULT PHASING

(program controller as shown below)

FROM MAIN MENU PRESS '8' (OVERLAPS), THEN '1' (VEHICLE OVERLAP SETTINGS).

```
 PAGE 1: VEHICLE OVERLAP 'A' SETTINGS
 PHASE:          ¦1234567891O111213141516
VEH OVL PARENTS:¦XX
VEH OVL NOT VEH:¦
VEH OVL NOT PED:¦
VEH OVL GRN EXT:¦
STARTUP COLOR: _ RED  _ YELLOW  _ GREEN
FLASH COLORS:  _ RED  _ YELLOW  X GREEN
SELECT VEHICLE OVERLAP OPTIONS:   (Y/N)
FLASH YELLOW IN CONTROLLER FLASH?...Y
GREEN EXTENSION (0-255 SEC).........0
YELLOW CLEAR (0=PARENT,3-25.5 SEC)..0.0
RED CLEAR (0=PARENT,0.1-25.5 SEC)...0.0
OUTPUT AS PHASE # (0=NONE, 1-16)....0
```

← NOTICE GREEN FLASH

PRESS '+'

```
 PAGE 1: VEHICLE OVERLAP 'B' SETTINGS
 PHASE:          ¦1234567891O111213141516
VEH OVL PARENTS:¦   X
VEH OVL NOT VEH:¦
VEH OVL NOT PED:¦
VEH OVL GRN EXT:¦
STARTUP COLOR: _ RED  _ YELLOW  _ GREEN
FLASH COLORS:  _ RED  _ YELLOW  X GREEN
SELECT VEHICLE OVERLAP OPTIONS:   (Y/N)
FLASH YELLOW IN CONTROLLER FLASH?...N
GREEN EXTENSION (0-255 SEC).........0
YELLOW CLEAR (0=PARENT,3-25.5 SEC)..0.0
RED CLEAR (0=PARENT,0.1-25.5 SEC)...0.0
OUTPUT AS PHASE # (0=NONE, 1-16)....0
```

← NOTICE GREEN FLASH

PRESS '+'

```
 PAGE 1: VEHICLE OVERLAP 'C' SETTINGS
 PHASE:          ¦1234567891O111213141516
VEH OVL PARENTS:¦    XX
VEH OVL NOT VEH:¦
VEH OVL NOT PED:¦
VEH OVL GRN EXT:¦
STARTUP COLOR: _ RED  _ YELLOW  _ GREEN
FLASH COLORS:  _ RED  _ YELLOW  X GREEN
SELECT VEHICLE OVERLAP OPTIONS:   (Y/N)
FLASH YELLOW IN CONTROLLER FLASH?...Y
GREEN EXTENSION (0-255 SEC).........0
YELLOW CLEAR (0=PARENT,3-25.5 SEC)..0.0
RED CLEAR (0=PARENT,0.1-25.5 SEC)...0.0
OUTPUT AS PHASE # (0=NONE, 1-16)....0
```

← NOTICE GREEN FLASH

OVERLAP PROGRAMMING COMPLETE

FLASHER CIRCUIT MODIFICATION DETAIL

IN ORDER TO INSURE THAT SIGNALS FLASH CONCURRENTLY ON THE SAME APPROACH, MAKE THE FOLLOWING FLASHER CIRCUIT CHANGES:

1. ON REAR OF PDA - REMOVE WIRE FROM TERM. T2-4 AND TERMINATE ON T2-2.
2. ON REAR OF PDA - REMOVE WIRE FROM TERM. T2-5 AND TERMINATE ON T2-3.
3. REMOVE FLASHER UNIT 2.

THE CHANGES LISTED ABOVE TIES ALL PHASES AND OVERLAPS TO FLASHER UNIT 1.

OVERLAP PROGRAMMING DETAIL FOR ALTERNATE PHASING

(program controller as shown below)

FROM MAIN MENU PRESS '8' (OVERLAPS), THEN '1' (VEHICLE OVERLAP SETTINGS). PRESS 'NEXT' TO ADVANCE TO PAGE 2.

NOTICE PAGE 2 →

```
 PAGE 2: VEHICLE OVERLAP 'A' SETTINGS
 PHASE:          ¦1234567891O111213141516
VEH OVL PARENTS:¦X
VEH OVL NOT VEH:¦
VEH OVL NOT PED:¦
VEH OVL GRN EXT:¦
STARTUP COLOR: _ RED  _ YELLOW  _ GREEN
FLASH COLORS:  _ RED  _ YELLOW  _ GREEN
SELECT VEHICLE OVERLAP OPTIONS:   (Y/N)
FLASH YELLOW IN CONTROLLER FLASH?...Y
GREEN EXTENSION (0-255 SEC).........0
YELLOW CLEAR (0=PARENT,3-25.5 SEC)..0.0
RED CLEAR (0=PARENT,0.1-25.5 SEC)...0.0
OUTPUT AS PHASE # (0=NONE, 1-16)....0
```

PRESS '+'

NOTICE PAGE 2 →

```
 PAGE 2: VEHICLE OVERLAP 'B' SETTINGS
 PHASE:          ¦1234567891O111213141516
VEH OVL PARENTS:¦   X
VEH OVL NOT VEH:¦
VEH OVL NOT PED:¦
VEH OVL GRN EXT:¦
STARTUP COLOR: _ RED  _ YELLOW  _ GREEN
FLASH COLORS:  _ RED  _ YELLOW  X GREEN
SELECT VEHICLE OVERLAP OPTIONS:   (Y/N)
FLASH YELLOW IN CONTROLLER FLASH?...N
GREEN EXTENSION (0-255 SEC).........0
YELLOW CLEAR (0=PARENT,3-25.5 SEC)..0.0
RED CLEAR (0=PARENT,0.1-25.5 SEC)...0.0
OUTPUT AS PHASE # (0=NONE, 1-16)....0
```

← NOTICE GREEN FLASH

PRESS '+'

NOTICE PAGE 2 →

```
 PAGE 2: VEHICLE OVERLAP 'C' SETTINGS
 PHASE:          ¦1234567891O111213141516
VEH OVL PARENTS:¦    X
VEH OVL NOT VEH:¦
VEH OVL NOT PED:¦
VEH OVL GRN EXT:¦
STARTUP COLOR: _ RED  _ YELLOW  _ GREEN
FLASH COLORS:  _ RED  _ YELLOW  _ GREEN
SELECT VEHICLE OVERLAP OPTIONS:   (Y/N)
FLASH YELLOW IN CONTROLLER FLASH?...Y
GREEN EXTENSION (0-255 SEC).........0
YELLOW CLEAR (0=PARENT,3-25.5 SEC)..0.0
RED CLEAR (0=PARENT,0.1-25.5 SEC)...0.0
OUTPUT AS PHASE # (0=NONE, 1-16)....0
```

OVERLAP PROGRAMMING COMPLETE

THIS ELECTRICAL DETAIL IS FOR
THE SIGNAL DESIGN: 03-1152
DESIGNED: Nov 2019
SEALED: 11-25-2019
REVISED: N/A

Electrical Detail
Sheet 5 of 5

DOCUMENT NOT CONSIDERED FINAL UNLESS ALL SIGNATURES COMPLETED

ELECTRICAL AND PROGRAMMING DETAILS FOR:

Drysdale Drive
at
Centerpointe/Eastport Access

Division 3 | New Hanover County | Wilmington

PLAN DATE:	November 2019	REVIEWED BY:	WJ Hamilton
PREPARED BY:	A. Andrews	RKA PROJ. NO:	19258 (040)

REVISIONS	INIT.	DATE

SEAL

NORTH CAROLINA PROFESSIONAL SEAL 32396 ENGINEER WILLIAM J. HAMILTON

DocuSigned by: William J. Hamilton — 11/25/19
SIGNATURE — DATE

SIG. INVENTORY NO. 03-1152

Prepared in the offices of:
RAMEY KEMP & ASSOCIATES, INC.
Transportation Engineers
5808 Faringdon Place, Suite 100
Raleigh, North Carolina 27609
919-872-5115 Tel. 919-878-5416 Fax.
www.rameykemp.com, NC License No. C-0910

Transportation Mobility and Safety Division — NC Department of Transportation — Traffic Engineering Branch — Signals Management Section

750 N.Greenfield Pkwy.Garner,NC 27529

11/25/2019
11:24:08 AM
\\rkaf06\Design\03-1152.ele5.dgn
User:jstiff

DocuSign Envelope ID: 8BEE47C3-CECA-4717-8B72-8C77D2788807

Design Loading for METAL POLE NO. 1

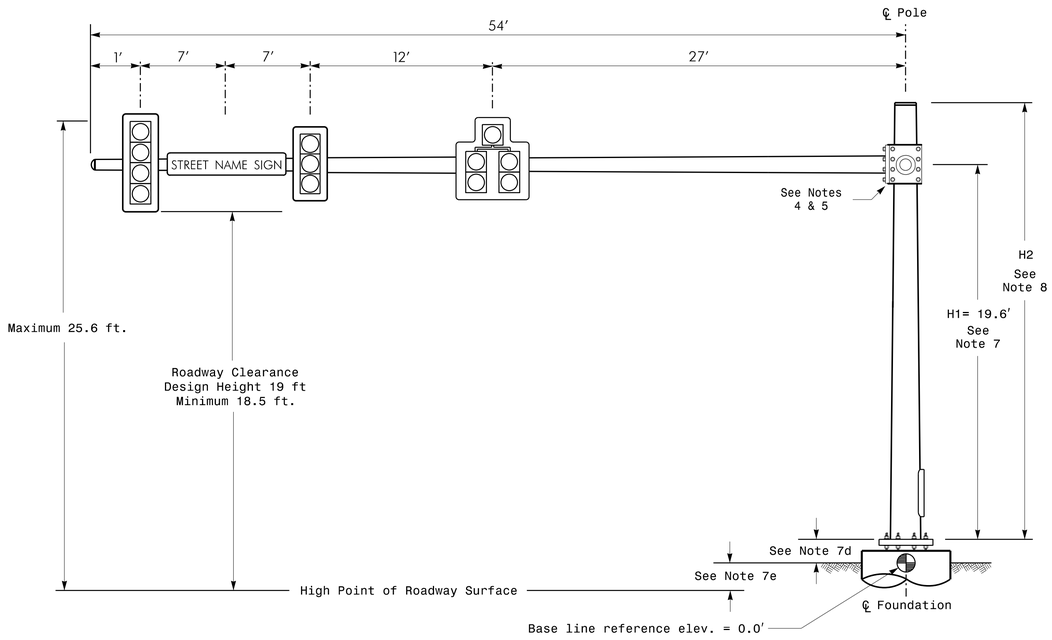

Elevation View @ 270°

Design Loading for METAL POLE NO. 2

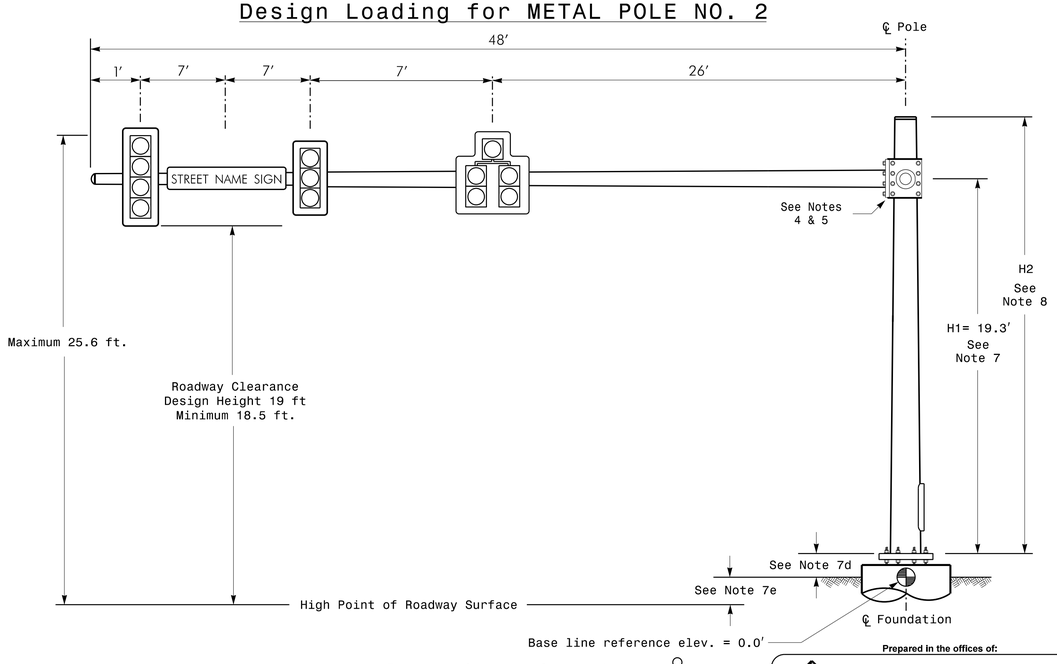

Elevation View @ 270°

Prepared in the offices of:
RAMEY KEMP & ASSOCIATES, INC.
Transportation Engineers
5808 Faringdon Place, Suite 100
Raleigh, North Carolina 27609
919-872-5115 Tel. 919-878-5416 Fax.
www.rameykemp.com

SPECIAL NOTE

The contractor is responsible for verifying that the mast arm attachment height (H1) will provide the "Design Height" clearance from the roadway before submitting final shop drawings for approval. Verify elevation data below which was obtained by field measurement or from available project survey data.

Elevation Data for Mast Arm Attachment (H1)

Elevation Differences for:	Pole 1	Pole 2
Baseline reference point at ℄ Foundation @ ground level	0.0 ft.	0.0 ft.
Elevation difference at High point of roadway surface	+ 0.6 ft.	+ 0.9 ft.
Elevation difference at Edge of travelway or face of curb	+ 1.0 ft.	+ 0.3 ft.

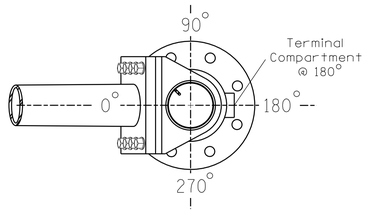

POLE RADIAL ORIENTATION

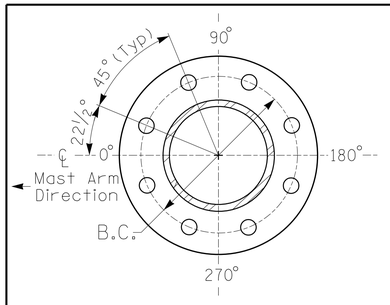

8 BOLT BASE PLATE DETAIL

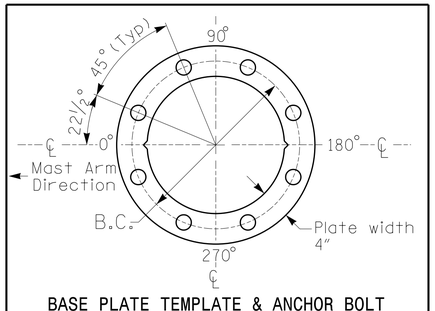

BASE PLATE TEMPLATE & ANCHOR BOLT LOCK PLATE DETAIL
For 8 Bolt Base Plate

METAL POLES No. 1 & 2

PROJECT REFERENCE NO.	SHEET NO.
U-5710A	Sig-4.6

MAST ARM LOADING SCHEDULE

LOADING SYMBOL	DESCRIPTION	AREA	SIZE	WEIGHT
	SIGNAL HEAD 12″–3 SECTION–WITH BACKPLATE–RIGID MOUNTED	9.3 S.F.	25.5″ W X 52.5″ L	60 LBS
	SIGNAL HEAD 12″–5 SECTION–WITH BACKPLATE–RIGID MOUNTED	16.3 S.F.	42.0″ W X 56.0″ L	103 LBS
	SIGNAL HEAD 12″–4 SECTION–WITH BACKPLATE–RIGID MOUNTED	11.5 S.F.	25.5″ W X 66.0″ L	74 LBS
STREET NAME SIGN	STREET NAME SIGN RIGID MOUNTED	12.0 S.F.	18.0″ W X 96.0″ L	27 LBS

NOTES

DESIGN REFERENCE MATERIAL

1. Design the traffic signal structure and foundation in accordance with:
   - The 6th Edition 2013 AASHTO "Standard Specifications for Structural Supports for Highway Signs, Luminaires, and Traffic Signals, including all of the latest interim revisions.
   - The 2018 NCDOT "Standard Specifications for Roads and Structures." The latest addenda to the specifications can be found in the traffic signal project special provisions.
   - The 2018 NCDOT Roadway Standard Drawings.
   - The traffic signal project plans and special provisions.
   - The NCDOT "Metal Pole Standards" located at the following NCDOT website: https://connect.ncdot.gov/resources/safety/Pages/ITS-Design-Resources.aspx

DESIGN REQUIREMENTS

2. Design the traffic signal structure using the loading conditions shown in the elevation views. These are anticipated worst case "design loads" and may not represent the actual loads that will be applied at the time of the installation. The contractor should refer to the traffic signal plans for the actual loads that will be applied at the time of the installation.
3. Design all signal supports using stress ratios that do not exceed 0.9.
4. The camber design for the mast arm deflection should provide an appearance of a low pitched arch where the tip or the free end of the mast arm does not deflect below horizontal when fully loaded.
5. A clamp-type bolted mast arm-to-pole connection may be used instead of the welded ring stiffened box connection shown as long as the connection meets all of the design requirements.
6. Design base plate with 8 anchor bolt holes. Provide 2 inch x 60 inch anchor bolts.
7. The mast arm attachment height (H1) shown is based on the following design assumptions:
   a. Mast arm slope and deflection are not considered in determining the arm attachment height as they are assumed to offset each other.
   b. Signal heads are rigidly mounted and vertically centered on the mast arm.
   c. The roadway clearance height for design is as shown in the elevation views.
   d. The top of the pole base plate is 0.75 feet above the ground elevation.
   e. Refer to the Elevation Data Chart for the elevation differences between the proposed foundation ground level and the high point of the roadway.
8. The pole manufacturer will determine the total height (H2) of each pole using the greater of the following:
   - Mast arm attachment height (H1) plus 2 feet, or
   - H1 plus 1/2 of the total height of the mast arm attachment assembly plus 1 foot.
9. If pole location adjustments are required, the contractor must gain approval from the Engineer as this may affect the mast arm lengths and arm attachment heights. The contractor may contact the Signal Design Section Senior Structural Engineer for assistance at (919) 814-5000.
10. The contractor is responsible for verifying that the mast arm length shown will allow proper positioning of the signal heads over the roadway.
11. The contractor is responsible for providing soil penetration testing data (SPT) to the pole manufacturer so site specific foundations can be designed.

All metal poles and arms should be black in color as specified in the project special provisions.

NCDOT Wind Zone 2 (130 mph)

DOCUMENT NOT CONSIDERED FINAL UNLESS ALL SIGNATURES COMPLETED

Prepared for: Traffic Engineering Branch, Traffic Management Unit, Signal Design Section
750 N.Greenfield Pkwy.Garner,NC 27529

Drysdale Drive
at
Centerpointe/Eastport Access

Division 3 New Hanover County Wilmington

PLAN DATE: November 2019 | REVIEWED BY: WJ Hamilton
PREPARED BY: A. Andrews | RKA PROJ. NO: 19258 (040)

SCALE 0 N/A N/A

REVISIONS	INIT.	DATE

SEAL
NORTH CAROLINA PROFESSIONAL SEAL 32396 ENGINEER WILLIAM J. HAMILTON
DocuSigned by: William J. Hamilton
ASSISTANT ENGINEER SIGNATURE
03-1152 DATE
SIG. INVENTORY NO. 03-1152

DocuSign Envelope ID: 8BEE47C3-CECA-4717-8B72-8C77D2788807

Design Loading for METAL POLE NO. 3

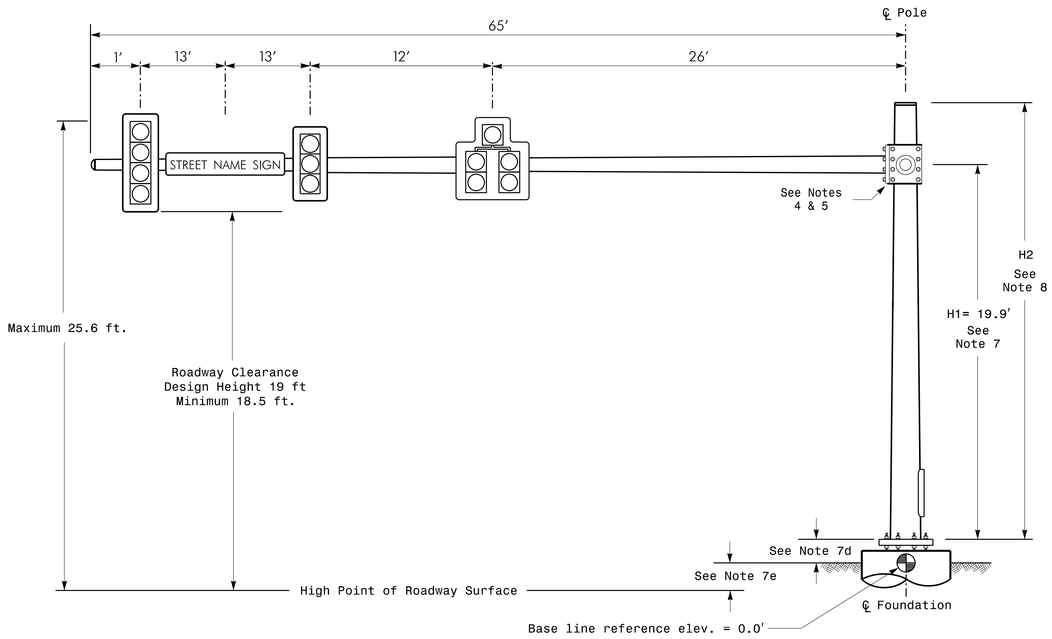

Elevation View @ 270°

Design Loading for METAL POLE NO. 4

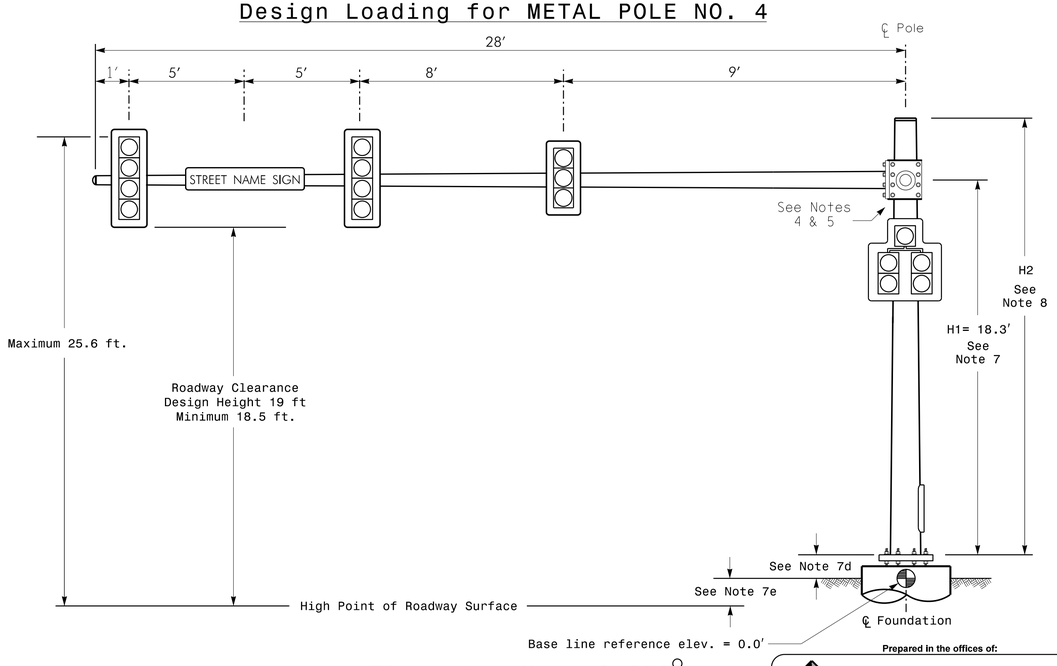

Elevation View @ 270°

Prepared in the offices of:
RAMEY KEMP & ASSOCIATES, INC.
Transportation Engineers
5808 Farlngdon Place, Suite 100
Raleigh, North Carolina 27609
919-872-5115 Tel. 919-878-5416 Fax.
www.rameykemp.com

SPECIAL NOTE

The contractor is responsible for verifying that the mast arm attachment height (H1) will provide the "Design Height" clearance from the roadway before submitting final shop drawings for approval. Verify elevation data below which was obtained by field measurement or from available project survey data.

Elevation Data for Mast Arm Attachment (H1)

Elevation Differences for:	Pole 3	Pole 4
Baseline reference point at ℄ Foundation @ ground level ⊕	0.0 ft.	0.0 ft.
Elevation difference at High point of roadway surface	+ 0.8 ft.	- 0.1 ft.
Elevation difference at Edge of travelway or face of curb	+ 0.5 ft.	+ 0.2 ft.

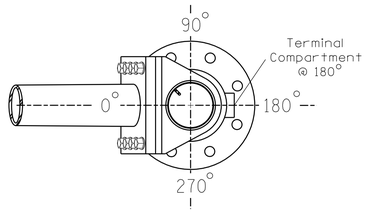

POLE RADIAL ORIENTATION

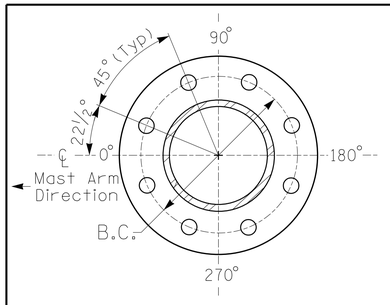

8 BOLT BASE PLATE DETAIL

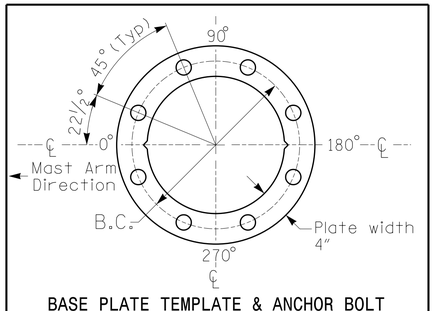

BASE PLATE TEMPLATE & ANCHOR BOLT LOCK PLATE DETAIL
For 8 Bolt Base Plate

METAL POLES No. 3 & 4

PROJECT REFERENCE NO.	SHEET NO.
U-5710A	Sig-4.7

MAST ARM LOADING SCHEDULE

LOADING SYMBOL	DESCRIPTION	AREA	SIZE	WEIGHT
	SIGNAL HEAD 12″–3 SECTION–WITH BACKPLATE–RIGID MOUNTED	9.3 S.F.	25.5″ W X 52.5″ L	60 LBS
	SIGNAL HEAD 12″–5 SECTION–WITH BACKPLATE–RIGID MOUNTED	16.3 S.F.	42.0″ W X 56.0″ L	103 LBS
	SIGNAL HEAD 12″–4 SECTION–WITH BACKPLATE–RIGID MOUNTED	11.5 S.F.	25.5″ W X 66.0″ L	74 LBS
STREET NAME SIGN	STREET NAME SIGN RIGID MOUNTED	12.0 S.F.	18.0″ W X 96.0″ L	27 LBS

NOTES

DESIGN REFERENCE MATERIAL

1. Design the traffic signal structure and foundation in accordance with:
   - The 6th Edition 2013 AASHTO "Standard Specifications for Structural Supports for Highway Signs, Luminaires, and Traffic Signals, including all of the latest interim revisions.
   - The 2018 NCDOT "Standard Specifications for Roads and Structures." The latest addenda to the specifications can be found in the traffic signal project special provisions.
   - The 2018 NCDOT Roadway Standard Drawings.
   - The traffic signal project plans and special provisions.
   - The NCDOT "Metal Pole Standards" located at the following NCDOT website: https://connect.ncdot.gov/resources/safety/Pages/ITS-Design-Resources.aspx

DESIGN REQUIREMENTS

2. Design the traffic signal structure using the loading conditions shown in the elevation views. These are anticipated worst case "design loads" and may not represent the actual loads that will be applied at the time of the installation. The contractor should refer to the traffic signal plans for the actual loads that will be applied at the time of the installation.
3. Design all signal supports using stress ratios that do not exceed 0.9.
4. The camber design for the mast arm deflection should provide an appearance of a low pitched arch where the tip or the free end of the mast arm does not deflect below horizontal when fully loaded.
5. A clamp-type bolted mast arm-to-pole connection may be used instead of the welded ring stiffened box connection shown as long as the connection meets all of the design requirements.
6. Design base plate with 8 anchor bolt holes. Provide 2 inch x 60 inch anchor bolts.
7. The mast arm attachment height (H1) shown is based on the following design assumptions:
   a. Mast arm slope and deflection are not considered in determining the arm attachment height as they are assumed to offset each other.
   b. Signal heads are rigidly mounted and vertically centered on the mast arm.
   c. The roadway clearance height for design is as shown in the elevation views.
   d. The top of the pole base plate is 0.75 feet above the ground elevation.
   e. Refer to the Elevation Data Chart for the elevation differences between the proposed foundation ground level and the high point of the roadway.
8. The pole manufacturer will determine the total height (H2) of each pole using the greater of the following:
   - Mast arm attachment height (H1) plus 2 feet, or
   - H1 plus 1/2 of the total height of the mast arm attachment assembly plus 1 foot.
9. If pole location adjustments are required, the contractor must gain approval from the Engineer as this may affect the mast arm lengths and arm attachment heights. The contractor may contact the Signal Design Section Senior Structural Engineer for assistance at (919) 814-5000.
10. The contractor is responsible for verifying that the mast arm length shown will allow proper positioning of the signal heads over the roadway.
11. The contractor is responsible for providing soil penetration testing data (SPT) to the pole manufacturer so site specific foundations can be designed.

All metal poles and arms should be black in color as specified in the project special provisions.

NCDOT Wind Zone 2 (130 mph)

DOCUMENT NOT CONSIDERED FINAL UNLESS ALL SIGNATURES COMPLETED

Prepared for: Traffic Engineering Branch, Traffic Mobility and Safety Division, North Carolina Department of Transportation, Signal Design Section
750 N.Greenfield Pkwy.Garner,NC 27529

Drysdale Drive at Centerpointe/Eastport Access

Division 3 New Hanover County Wilmington

PLAN DATE: November 2019 REVIEWED BY: WJ Hamilton

PREPARED BY: A. Andrews RKA PROJ. NO: 19258 (040)

SCALE 0 N/A N/A

REVISIONS	INIT.	DATE

SEAL
NORTH CAROLINA PROFESSIONAL SEAL 32396 ENGINEER WILLIAM J. HAMILTON
Digitally signed by William J. Hamilton
SIGNATURE 11/25/19 DATE

SIG. INVENTORY NO. 03-1152

DocuSign Envelope ID: 8BEE47C3-CECA-4717-8B72-8C77D2788807

PROJECT REFERENCE NO.	SHEET NO.
U-5710A	Sig-5.0

PHASING DIAGRAM

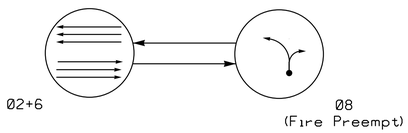

PHASING DIAGRAM DETECTION LEGEND

- DETECTED MOVEMENT
- UNDETECTED MOVEMENT (OVERLAP)
- UNSIGNALIZED MOVEMENT
- PEDESTRIAN MOVEMENT

TABLE OF OPERATION

SIGNAL FACE	PHASE Ø2+6	PHASE Ø8	FLASH
21, 22, 23	FY	R	Y
61, 62, 63	FY	R	Y
81, 82	DRK	G	R

FY = 8" FLASHING YELLOW
DRK = DARK

SIGNAL FACE I.D.

All Heads L.E.D.

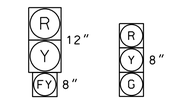

21,22,23
61,62,63

81,82

2 Phase
Semi-Actuated
(Wilmington Signal System)

1. Refer to "Roadway Standard Drawings NCDOT" dated January 2018, "Standard Specifications for Roads and Structures" dated January 2018.
2. Do not program signal for late night flashing operation unless otherwise directed by the Engineer.
3. Maintain emergency vehicle preemption switch in Fire Station.
4. The City Traffic Engineer will determine the Delay before Preempt and Preempt Dwell Min Green time for the emergency vehicle preemption timing.
5. Clear signal heads 21, 22, 23, 61, 62, and 63 from flashing 8" yellow to steady 12" yellow during interval 1 and steady red during interval 2.
6. When clearing to preemption, signal heads 81 and 82 shall display red during interval 1 and 2. When clearing from preemption, signal heads 81 and 82 shall display yellow during interval 1 and red during interval 2.
7. Pavement markings are existing.
8. Signal system data:
   Controller Asset #0946.

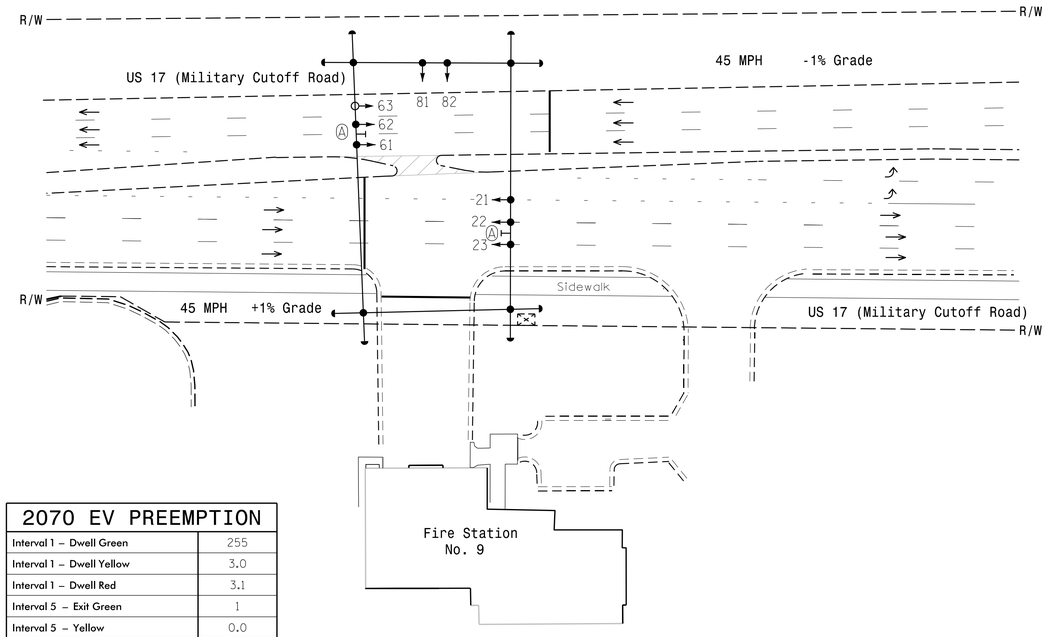

OASIS 2070 TIMING CHART

FEATURE	PHASE 2	PHASE 6	PHASE 8
Min Green 1 *	12	12	7
Extension 1 *	0.0	0.0	0.0
Max Green 1 *	30	30	30
Yellow Clearance	4.4	4.6	3.0
Red Clearance	1.0	1.6	3.1
Walk 1 *	-	-	-
Don't Walk 1	-	-	-
Seconds Per Actuation *	-	-	-
Max Variable Initial *	-	-	-
Time Before Reduction *	-	-	-
Time To Reduce *	-	-	-
Minimum Gap	-	-	-
Recall Mode	MIN RECALL	MIN RECALL	-
Vehicle Call Memory	-	-	-
Dual Entry	-	-	-
Simultaneous Gap	-	-	-

* These values may be field adjusted. Do not adjust Min Green and Extension times for phases 2 and 6 lower than what is shown. Min Green for all other phases should not be lower than 4 seconds.

2070 EV PREEMPTION

Interval 1 – Dwell Green	255
Interval 1 – Dwell Yellow	3.0
Interval 1 – Dwell Red	3.1
Interval 5 – Exit Green	1
Interval 5 – Yellow	0.0
Interval 5 – Red	0.0
Delay Time	**
Min Green Before Pre	1
Ped Clear Before Pre	0
Yellow Clear Before Pre	0.0 *
Red Clear Before Pre	0.0 *
Dwell Min Time	**
Enable Backup Protection	N
Ped Clear Through Yellow	N

* Clearance time defaults to times used for phase during normal operation.
** See Note 4.

LEGEND

PROPOSED		EXISTING
○→	Traffic Signal Head	●→
◐→	Modified Signal Head	N/A
⊣	Sign	⊣
□↓	Pedestrian Signal Head With Push Button & Sign	■↓
○	Signal Pole with Guy	●
○	Signal Pole with Sidewalk Guy	●
▭	Inductive Loop Detector	▭
⊠	Controller & Cabinet	⊠
□	Junction Box	■
·-·-·	2-in Underground Conduit	·-·-·
N/A	Right of Way	— — —
→	Directional Arrow	→
Ⓐ	"Emergency Signal" Sign (W3-8)	Ⓐ

Signal Upgrade

Prepared for: Transportation Mobility and Safety Division, North Carolina Department of Transportation, Signal Design Section
750 N.Greenfield Pkwy,Garner,NC 27529

Prepared in the offices of:
RAMEY KEMP & ASSOCIATES, INC.
Transportation Engineers
5808 Faringdon Place, Suite 100
Raleigh, North Carolina 27609
919-872-5115 Tel. 919-878-5416 Fax.
www.rameykemp.com, NC License No. C-0910

SCALE 0 40 1"=40'

US 17 (Military Cutoff Road) at Wilmington Fire Station #9

Division 3 New Hanover County Wilmington

PLAN DATE:	November 2019	REVIEWED BY:	WJ Hamilton
PREPARED BY:	A. Andrews	RKA PROJ. NO.:	19258 (040)

REVISIONS	INIT.	DATE

DOCUMENT NOT CONSIDERED FINAL UNLESS ALL SIGNATURES COMPLETED

SEAL
NORTH CAROLINA PROFESSIONAL SEAL 32396 ENGINEER WILLIAM J. HAMILTON

DocuSigned by: William J. Hamilton
SIGNATURE 11/25/19 DATE

SIG. INVENTORY NO. 03-0946

11/25/2019
...\03-0946.sig (Fire Station).dgn
User:jstiff

DocuSign Envelope ID: 8BEE47C3-CECA-4717-8B72-8C77D2788807

EDI MODEL 2010ECL CONFLICT MONITOR

PROGRAMMING DETAIL

(remove jumper and set switches as shown)

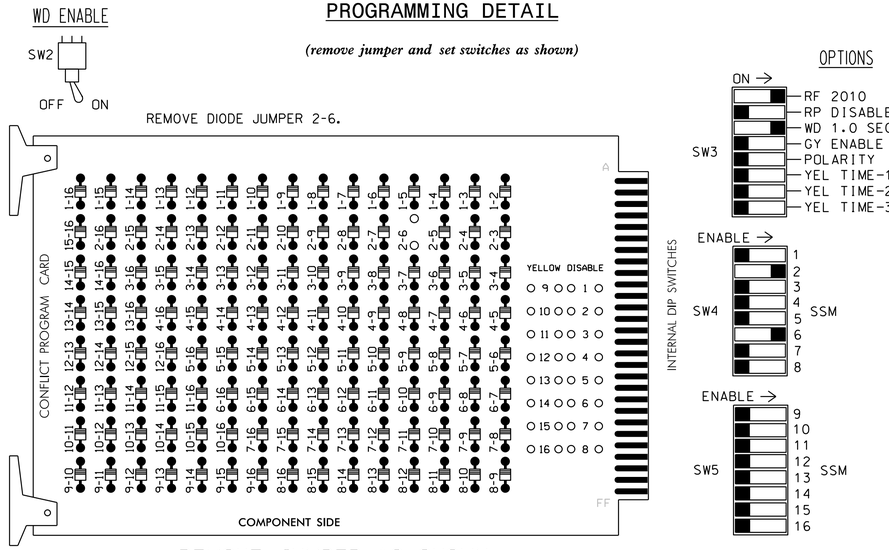

REMOVE JUMPER AS SHOWN

■ = DENOTES POSITION OF SWITCH

NOTES:

1. Card is provided with all diode jumpers in place. Removal of any jumper allows its channels to run concurrently.
2. Make sure jumpers SEL2-SEL5 are present on the monitor board.

NOTES

1. To prevent "flash-conflict" problems, insert red flash program blocks for all unused vehicle load switches in the output file. The installer shall verify that signal heads flash in accordance with the Signal Plans.
2. To prevent red failures on unused monitor channels, see Red Monitor Board Programming Detail this sheet.
3. Program controller to start up in phases 2 and 6 green.
4. Enable Simultaneous Gap-Out, for all phases.
5. Program phases 2 and 6 for Yellow Flash.
6. The cabinet and controller are part of the Wilmington Signal System.

EQUIPMENT INFORMATION

CONTROLLER.....2070
CABINET.....332
SOFTWARE.....ECONOLITE OASIS
CABINET MOUNT.....BASE
OUTPUT FILE POSITIONS...12
LOAD SWITCHES USED.....S2,S2P**,S6,S8
PHASES USED.....2,6,8*
OVERLAPS.....NONE

* USED DURING PREEMPT ONLY
** USED FOR PILOT LAMP

PROJECT REFERENCE NO.	SHEET NO.
U-5710A	Sig-5.1

SIGNAL HEAD HOOK-UP CHART

LOAD SWITCH NO.	S1	S2	S2P	S3	S4	S4P	S5	S6	S6P	S7	S8	S8P
PHASE	1	2	2 PED	3	4	4 PED	5	6	6 PED	7	8	8 PED
SIGNAL HEAD NO.	NU	21,22, 23	*	NU	NU	NU	NU	61,62, 63	NU	NU	81,82	NU
RED		128						134			107	
YELLOW		129						135			108	
GREEN											109	
RED ARROW												
YELLOW ARROW												
GREEN ARROW												
8" FLASHING YELLOW →		130						8" FLASHING YELLOW → 136				

NU = Not Used
* See Lamp Notes (Sheet 2 of 2)

PREEMPT ONLY PHASE OMIT NOTE

(program controller as noted below)

From Main Menu press '2' (Phase Control), then '1' (Phase Control Functions). Program phase 8 for 'Omit Phase' and phases 2 and 6 for 'Startup Calls'. This is to prevent phase 8 from being served when not in Preempt.

IN-CYCLE FLASH PROGRAMMING NOTE FOR HEADS 21,22,23,61 AND 62

(program controller as noted below)

From Main Menu press '2' (Phase Control), then '1' (Phase Control Functions). Program phases 2 and 6 for 'Green Int Flash'. This is done to flash phases 2 and 6 yellow when not in Preempt.

INPUT FILE POSITION LAYOUT

(front view)

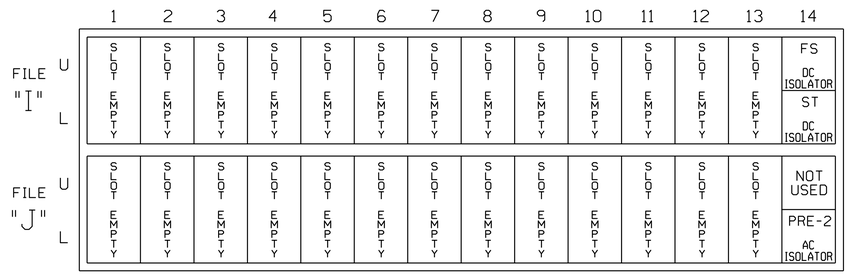

EX.: 1A, 2A, ETC. = LOOP NO.'S

FS = FLASH SENSE
ST = STOP TIME
PRE-2 = PREEMPT 2

RED MONITOR BOARD PROGRAMMING

(position jumpers as shown below)

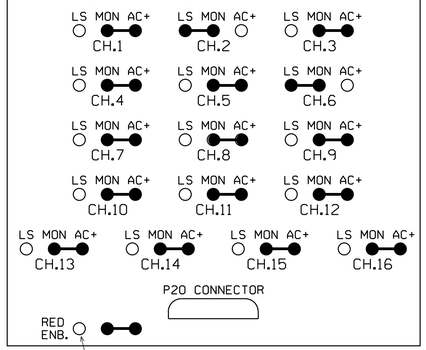

This pin clipped at the factory.

THIS ELECTRICAL DETAIL IS FOR
THE SIGNAL DESIGN: 03-0946
DESIGNED: Nov 2019
SEALED: 11-25-2019
REVISED: N/A

Electrical Detail
Sheet 1 of 2

DOCUMENT NOT CONSIDERED FINAL UNLESS ALL SIGNATURES COMPLETED

Prepared in the offices of:
RAMEY KEMP & ASSOCIATES, INC.
Transportation Engineers
5808 Faringdon Place, Suite 100
Raleigh, North Carolina 27609
919-872-5115 Tel. 919-878-5416 Fax.
www.rameykemp.com, NC License No. C-0910

ELECTRICAL AND PROGRAMMING DETAILS FOR:

US 17 (Military Cutoff Road) at Wilmington Fire Station #9

Division 3 New Hanover County Wilmington

PLAN DATE:	November 2019	REVIEWED BY:	WJ Hamilton
PREPARED BY:	A. Andrews	RKA PROJ. NO.:	19258 (040)

REVISIONS	INIT.	DATE

NC Department of Transportation Traffic Engineering Branch Traffic Signal Management Section
750 N.Greenfield Pkwy,Garner,NC 27529

SEAL
NORTH CAROLINA PROFESSIONAL SEAL 32396 ENGINEER WILLIAM J. HAMILTON

DocuSigned by: William J. Hamilton 11/25/19
SIGNATURE DATE

SIG. INVENTORY NO. 03-0946

DocuSign Envelope ID: 8BEE47C3-CECA-4717-8B72-8C77D2788807

EMERGENCY VEHICLE PREEMPTION PUSHBUTTON AND INDICATOR LAMP WIRING DETAIL

(wire push-button and lamp as shown below)

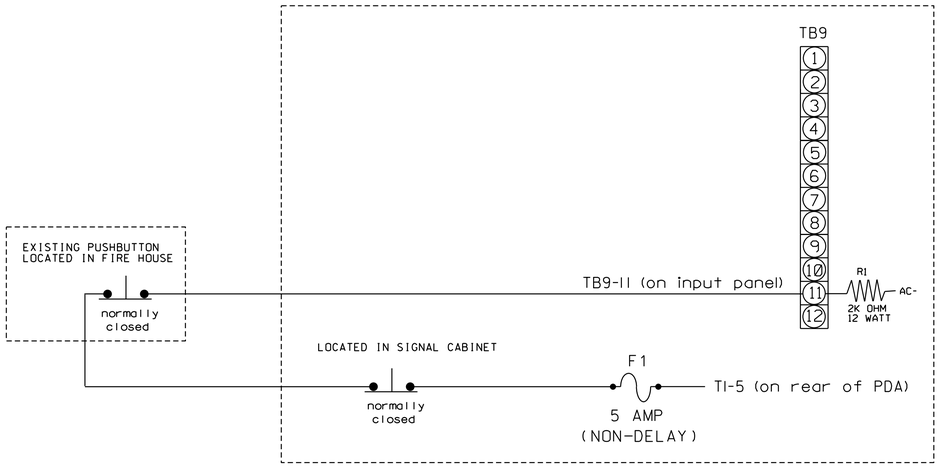

IMPORTANT!

1. Make sure AC isolator inserted in Slot J14L is set for inverted input.
2. Connect terminal TB9-12B (on input panel) to AC neutral (jumper may need to be added).

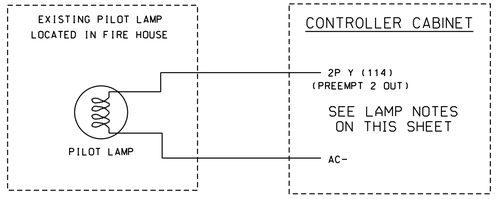

LAMP NOTES

In order for the pilot lamp in the fire house to function, make the following programming changes to Output No. 33:

1. Change the function of C1 pin 35 to be an output for Preempt 2. This is accomplished by the following:
   - A) From Main Menu select '6' (Outputs). Then select '1' (Output Assignments).
   - B) Scroll to C1 pin 35, Output No. 33. You will see that it is not enabled.
   - C) Scroll down to Preempt and input 'YES'. You will then be asked for a preempt number. Enter a '2' here.
   - D) The output is now assigned for PRE-2 output.
2. If field terminal 114 has a conflict monitor wire attached, remove, tape, and label wire.
3. Make sure load resistors are in place as shown in the Load Resistor Installation Detail.
4. Install a loadswitch in Output File Slot S2P.

LOAD RESISTOR INSTALLATION DETAIL

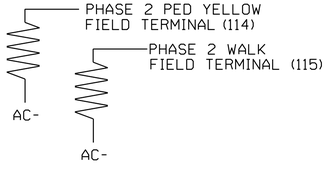

ACCEPTABLE VALUES	
VALUE (ohms)	WATTAGE
1.5K - 1.9K	25W (min)
2.0K - 3.0K	10W (min)

LOGICAL I/O PROCESSOR PROGRAMMING DETAIL FOR SPECIAL OPERATIONS

NOTE

When preempt delay time is used, Step 1 below is necessary to ensure the pilot lamp in the fire house will activate immediately after the push button is depressed:

STEP 1

From Main Menu: Press '6' (Outputs), then select '3' (Logical I/O Processor).

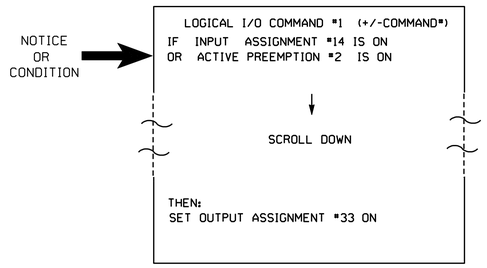

NOTE: PREEMPT INDICATOR LAMP CONTROL.

STEP 2

NOTE

In order for pilot lamp in fire house to deactivate immediately after ending preemption, program the following:

Toggle the '+' button once to access Logical I/O Command #2.

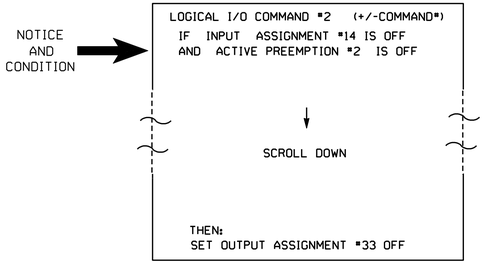

NOTE: PREEMPT INDICATOR LAMP CONTROL.

STEP 3

NOTE

In order to clear signal heads 81,82 from dark to a steady red during clearance intervals 1 and 2, program the following:

Toggle the '+' button once to access Logical I/O Command #3.

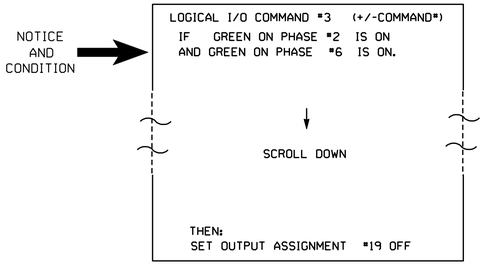

NOTE: SIGNAL HEADS 81,82 RED CONTROL.

STEP 4

From Main Menu press '2' (Phase Control), then '1' (Phase Control Functions). Scroll to the bottom of the menu and enable logical processor (Act Logic 1-16) by flagging #1, #2 and #3.

END OF PROGRAM.

PROJECT REFERENCE NO.	SHEET NO.
U-5710A	Sig-5.2

EMERGENCY VEHICLE PREEMPTION PROGRAMMING DETAIL

(program controller as shown below)

From Main Menu press 'A' (Preemption), then '1' (Standard Preemptions). Press 'NEXT' to advance to Preemption #2.

```
   PREEMPTION  #2   SETTINGS (NEXT:1-10)
 INTERVAL/TIMING  |   CLEAR/DWELL PHASES
   GRN YEL  RED   | 12345678910111213141516
1 255  3.0  3.1   |        X
2   0  0.0  0.0   |
3   0  0.0  0.0   |
4   0  0.0  0.0   |
5   1  0.0  0.0   | X    X
EXIT CALLS        |
                OPTIONS
PRIORITY (Y/N TO SELECT) ............MED
DELAY TIMER (0-255 SEC) .............*
MIN GREEN BEFORE PRE (0= DEFAULT)....1
PED CLEAR BEFORE PRE (0= DEFAULT)....0
YELLOW CLEAR BEFORE PRE (0= DEFAULT).0.0
RED CLEAR BEFORE PRE (0= DEFAULT)....0.0
DWELL MIN TIMER (0-255 SEC) .........*
DWELL MAX TIMER (0=OFF,1-255MIN) ....0
DWELL HOLD-OVER TIMER (0-255) .......0
LATCH CALL? .........................Y
LINK TO NEXT PREEMPT? ...............N
ENABLE BACKUP PROTECTION? ...........N
HOLD CLEAR 1 PHASES DURING DELAY? ...N
FAST GREEN FLASH DWELL PHASES? ......N
PED CLEARANCE THROUGH YELLOW? .......N
INHIBIT OVERLAP GREEN EXTENSION? ....N
SERVICE DURING SOFTWARE FLASH? ......N
REST IN RED DURING DWELL INTERVAL? ..N
FLASH DWELL INTERVAL? ...............N
ALLOW PEDS IN DWELL INTERVAL? .......N
RE-TIME DWELL INTERVAL? .............Y
OVERLAPS:                | ABCDEFGHIJKLMNOP
DWELL INT FLASH YELLOW   |
OMIT OVERLAPS:           |
```

* Denotes timing to be determined in field.

THIS ELECTRICAL DETAIL IS FOR
THE SIGNAL DESIGN: 03-0946
DESIGNED: Nov 2019
SEALED: 11-25-2019
REVISED: N/A

Electrical Detail
Sheet 2 of 2

DOCUMENT NOT CONSIDERED FINAL UNLESS ALL SIGNATURES COMPLETED

Prepared in the offices of:
RAMEY KEMP & ASSOCIATES, INC.
Transportation Engineers
5808 Faringdon Place, Suite 100
Raleigh, North Carolina 27609
919-872-5115 Tel. 919-878-5416 Fax.
www.rameykemp.com, NC License No. C-0910

ELECTRICAL AND PROGRAMMING DETAILS FOR:

NC Department of Transportation Mobility and Safety Division, Traffic Engineering Branch, Signals Management Section

750 N.Greenfield Pkwy.Garner.NC 27529

US 17 (Military Cutoff Road) at Wilmington Fire Station #9

Division 3 New Hanover County Wilmington

PLAN DATE:	November 2019	REVIEWED BY:	WJ Hamilton
PREPARED BY:	A. Andrews	RKA PROJ. NO.:	19258 (040)

REVISIONS	INIT.	DATE

SEAL
NORTH CAROLINA PROFESSIONAL SEAL 32396 ENGINEER WILLIAM J. HAMILTON
DocuSigned by: William J. Hamilton
SIGNATURE
11/25/19
DATE
SIG. INVENTORY NO. 03-0946

DocuSign Envelope ID: 8BEE47C3-CECA-4717-8B72-8C77D2788807

PROJECT REFERENCE NO.	SHEET NO.
U-5710A	Sig-6.0

PHASING DIAGRAM

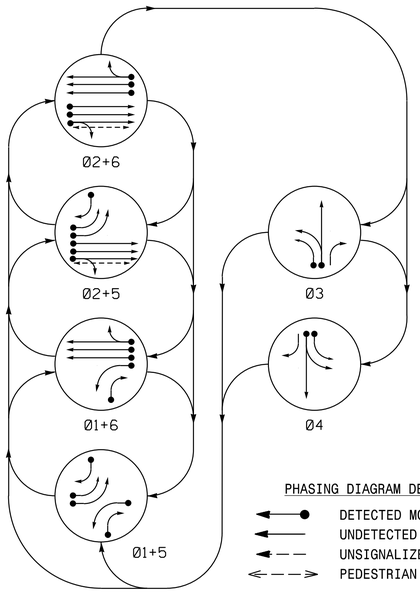

PHASING DIAGRAM DETECTION LEGEND

- DETECTED MOVEMENT
- UNDETECTED MOVEMENT (OVERLAP)
- UNSIGNALIZED MOVEMENT
- PEDESTRIAN MOVEMENT

TABLE OF OPERATION

SIGNAL FACE	PHASE						
	Ø1+5	Ø1+6	Ø2+5	Ø2+6	Ø3	Ø4	FLASH
11	←	←	~~R~~	~~R~~	~~R~~	~~R~~	~~Y~~
21,22,23	R	R	G	G	R	R	Y
31	R	R	R	R	G ←	R	R
32	R →	R ↗	R	R	G	R	R
41	R	R	R	R	R	G ←	R
42	R →	R	R ↗	R	R	G	R
51,52	←	~~R~~	←	~~R~~	~~R~~	~~R~~	~~Y~~
61,62,63	R	G	R	G	R	R	Y
P21,P22	DW	DW	W	W	DW	DW	DRK

SIGNAL FACE I.D.

All Heads L.E.D.

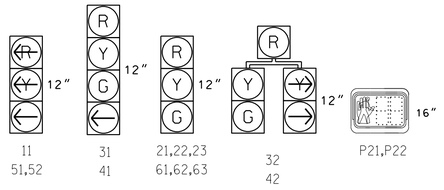

OASIS 2070 LOOP & DETECTOR INSTALLATION CHART

INDUCTIVE LOOPS					DETECTOR PROGRAMMING							
LOOP	SIZE (FT)	DISTANCE FROM STOPBAR (FT)	TURNS	NEW LOOP	PHASE	CALLING	EXTENSION	FULL TIME DELAY	STRETCH TIME	DELAY TIME	SYSTEM LOOP	NEW CARD
1A	6X40	0	2-4-2	-	1	Y	Y	-	-	-	-	-
1B	6X40	0	2-4-2	-	1	Y	Y	-	-	15	-	-
2A	6X6	300	EXIST	-	2	Y	Y	-	-	-	-	-
2B	6X6	300	EXIST	-	2	Y	Y	-	-	-	-	-
2C	6X6	300	EXIST	-	2	Y	Y	-	-	-	-	-
3A	6X40	0	2-4-2	-	3	Y	-	-	-	3	-	-
3B	6X40	0	2-4-2	-	3	Y	-	-	-	-	-	-
4A	6X60	0	2-4-2	-	4	Y	Y	-	-	-	-	-
4B	6X60	0	2-4-2	-	4	Y	Y	-	-	-	-	-
5A	6X40	0	2-4-2	-	5	Y	Y	-	-	-	-	-
5B	6X40	0	2-4-2	-	5	Y	Y	-	-	-	-	-
5C	6X60	0	2-4-2	-	5	Y	Y	-	-	15	-	-
6A	6X6	300	EXIST	-	6	Y	Y	-	-	-	-	-
6B	6X6	300	EXIST	-	6	Y	Y	-	-	-	-	-
6C	6X6	300	EXIST	Y	6	Y	Y	-	-	-	-	Y

6 Phase
Fully Actuated
(Wilmington Signal System)

NOTES

1. Refer to "Roadway Standard Drawings NCDOT" dated January 2018 and "Standard Specifications for Roads and Structures" dated January 2018.
2. Do not program signal for late night flashing operation unless otherwise directed by the Engineer.
3. Phase 1 and/or phase 5 may be lagged.
4. The order of phase 3 and phase 4 may be reversed.
5. Set all detector units to presence mode.
6. Reposition existing signal heads numbered 21, 22, 61 and 62.
7. In the event of loop replacement, refer to the current ITS and Signals Design Manual and submit a Plan of Record to the Signal Design Section.
8. Omit "WALK" and flashing "DON'T WALK" with no pedestrian calls.
9. Program pedestrian heads to countdown the flashing "Don't Walk" time only.
10. Maximum times shown in timing chart are for free-run operation only. Coordinated signal system timing values shall supersede these values.
11. Signal system data:
    Controller Asset #: 0895.
12. Reposition existing sign 'D' on Metal Pole #14.

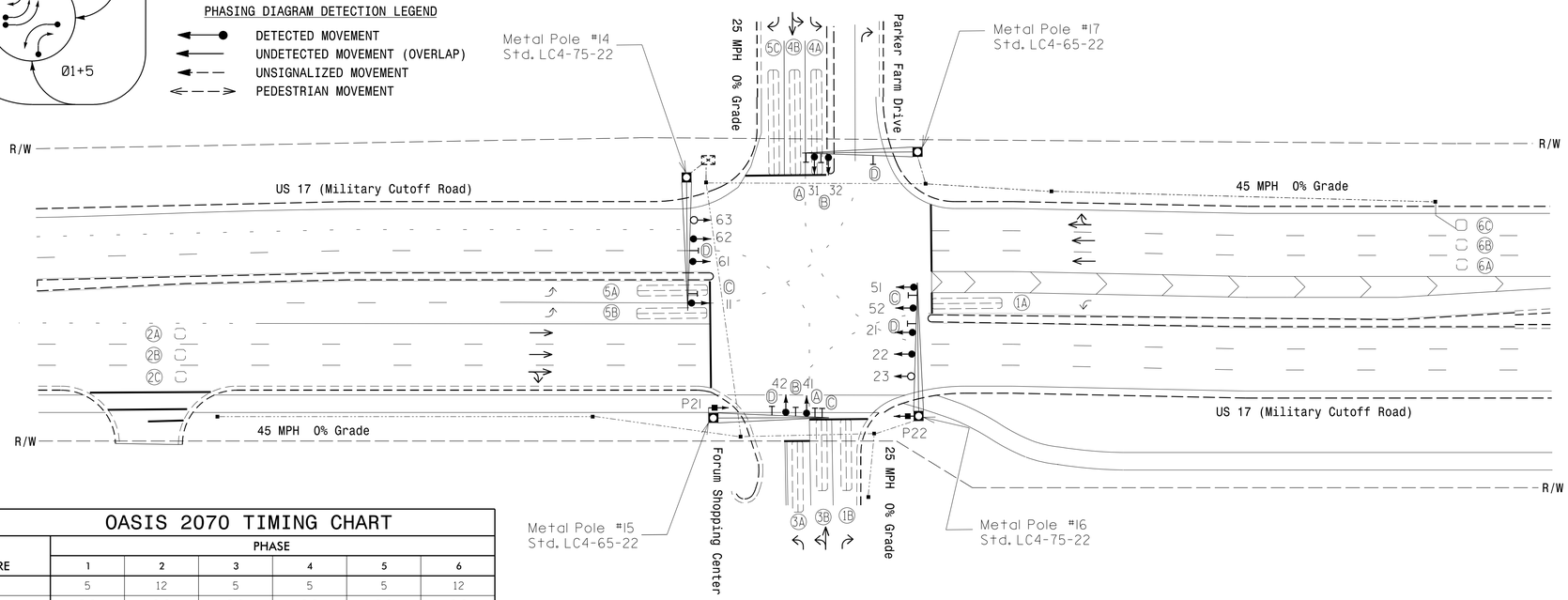

LEGEND

PROPOSED		EXISTING
○→	Traffic Signal Head	●→
◐→	Modified Signal Head	N/A
⊣	Sign	⊣
▭↓	Pedestrian Signal Head With Push Button & Sign	■↓
○	Signal Pole with Guy	●
○⤵	Signal Pole with Sidewalk Guy	●⤵
▭	Inductive Loop Detector	▭
⊠	Controller & Cabinet	⊠
□	Junction Box	■
----	2-in Underground Conduit	----
N/A	Right of Way	----
→	Directional Arrow	→
○▭	Metal Pole with Mastarm	○▭
Ⓐ	Left Arrow "ONLY" Sign (R3-5L)	Ⓐ
Ⓑ	Combined Through and Left Arrow Sign (R3-6L)	Ⓑ
Ⓒ	"U-TURN YIELD TO RIGHT TURN" Sign (R10-16)	Ⓒ
Ⓓ	Street Name Sign	Ⓓ

OASIS 2070 TIMING CHART

FEATURE	PHASE					
	1	2	3	4	5	6
Min Green 1 *	5	12	5	5	5	12
Extension 1 *	2.0	6.0	2.0	2.0	2.0	6.0
Max Green 1 *	15	100	20	30	15	100
Yellow Clearance	3.0	4.5	3.2	3.2	3.0	4.5
Red Clearance	3.5	1.4	3.3	3.3	3.5	1.6
Walk 1 *	-	7	-	-	-	-
Don't Walk 1	-	20	-	-	-	-
Seconds Per Actuation *	-	1.2	-	-	-	1.2
Max Variable Initial *	-	34	-	-	-	34
Time Before Reduction *	-	15	-	-	-	15
Time To Reduce *	-	30	-	-	-	30
Minimum Gap	-	3.0	-	-	-	3.0
Recall Mode	-	MIN RECALL	-	-	-	MIN RECALL
Vehicle Call Memory	-	YELLOW	-	-	-	YELLOW
Dual Entry	-	-	-	-	-	-
Simultaneous Gap	ON	ON	ON	ON	ON	ON

* These values may be field adjusted. Do not adjust Min Green and Extension times for phases 2 and 6 lower than what is shown. Min Green for all other phases should not be lower than 4 seconds.

Signal Upgrade

DOCUMENT NOT CONSIDERED FINAL UNLESS ALL SIGNATURES COMPLETED

Prepared in the offices of:
RAMEY KEMP & ASSOCIATES, INC.
Transportation Engineers
5808 Farlington Place, Suite 100
Raleigh, North Carolina 27609
919-872-5115 Tel, 919-870-0416 Fax,
www.rameykemp.com

Prepared for: Transportation Mobility and Safety Division, Signal Design Section
750 N.Greenfield Pkwy.Garner,NC 27529

US 17 (Military Cutoff Road)
at
Forum Shopping Center/
Parker Farm Drive
Division 3 New Hanover County Wilmington
PLAN DATE: November 2019 REVIEWED BY: WJ Hamilton
PREPARED BY: A. Andrews RKA PROJ. NO: 19258 (040)

SCALE 0 40 1"=40'

REVISIONS	INIT.	DATE

SEAL
NORTH CAROLINA PROFESSIONAL SEAL 32396 ENGINEER WILLIAM J. HAMILTON
DocuSigned by: William J. Hamilton
SIGNATURE 11/25/19 DATE
SIG. INVENTORY NO. 03-0895

11/25/2019
4:54:28 PM
C:\Projects\Sig\03-0895.sig.dgn
User:lsmith

DocuSign Envelope ID: 8BEE47C3-CECA-4717-8B72-8C77D2788807

PROJECT REFERENCE NO.	SHEET NO.
U-5710A	Sig-6.1

EDI MODEL 2010ECL-NC CONFLICT MONITOR PROGRAMMING DETAIL

(remove jumpers and set switches as shown)

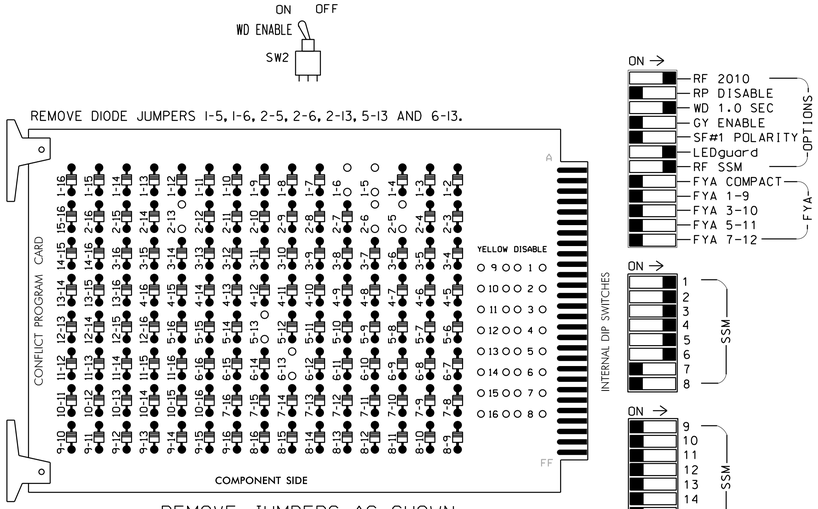

REMOVE JUMPERS AS SHOWN

NOTES:

1. Card is provided with all diode jumpers in place. Removal of any jumper allows its channels to run concurrently.
2. Make sure jumpers SEL2-SEL5 are present on the monitor board.

■ = DENOTES POSITION OF SWITCH

NOTES

1. To prevent "flash-conflict" problems, insert red flash program blocks for all unused vehicle load switches in the output file. The installer shall verify that signal heads flash in accordance with the Signal Plans.
2. Ensure that red enable is active at all times during normal operation. To prevent red failures on unused monitor channels, tie unused red monitor unputs 7,8,9,10,11,12,13,14,15 & 16 to load switch AC+ per cabinet manufacturer's instructions.
3. Enable Simultaneous Gap-Out for all Phases.
4. Program phases 2 and 6 for Variable Initial and Gap Reduction.
5. Program phases 2 and 6 for Startup In Green.
6. Program phase 2 for Startup Ped Call.
7. Program phases 2 and 6 for Yellow Flash.
8. The cabinet and controller are part of the Wilmington Signal System.

EQUIPMENT INFORMATION

CONTROLLER.....2070
CABINET 332
SOFTWARE .....ECONOLITE OASIS
CABINET MOUNT.....BASE
OUTPUT FILE POSITIONS...12
LOAD SWITCHES USED.....S1,S2,S2P,S3,S4,S5,S6
PHASES USED.....1,2,2PED,3,4,5,6
OVERLAPS.....NONE

SIGNAL HEAD HOOK-UP CHART

LOAD SWITCH NO.	S1		S2	S2P	S3		S4		S4P	S5		S6	S6P	S7	S8	S8P
PHASE	1		2	2 PED	3		4		4 PED	5		6	6 PED	7	8	8 PED
SIGNAL HEAD NO.	11	32	21,22 23	P21, P22	31	32	41	42	NU	42	51,52	61,62, 63	NU	NU	NU	NU
RED			128		116	116	101	101				134				
YELLOW			129		117	117	102	102				135				
GREEN			130		118	118	103	103				136				
RED ARROW	125										131					
YELLOW ARROW	126	126								132	132					
GREEN ARROW	127	127			118		103			133	133					
✋				113												
🚶				115												

NU = NOT USED

COUNTDOWN PEDESTRIAN SIGNAL OPERATION

Countdown Ped Signals are required to display timing only during Ped Clearance Interval. Consult Ped Signal Module user's manual for instructions on selecting this feature.

INPUT FILE POSITION LAYOUT

(front view)

		1	2	3	4	5	6	7	8	9	10	11	12	13	14
FILE "I"	U	ø1 1A	ø1 1B	ø2 2B	SLOT EMPTY	ø3 3A	ø4 4A	SLOT EMPTY	ø3 3B	SLOT EMPTY	SLOT EMPTY	SLOT EMPTY	ø2 PED DC ISOLATOR	SLOT EMPTY	FS DC ISOLATOR
	L	NOT USED	ø2 2A	ø2 2C		NOT USED	ø4 4B		NOT USED				NOT USED		ST DC ISOLATOR
FILE "J"	U	ø5 5A	ø5 5B	ø6 6A	ø6 6C	SLOT EMPTY	SLOT EMPTY	SLOT EMPTY	SLOT EMPTY	SLOT EMPTY	SLOT EMPTY	SLOT EMPTY	SLOT EMPTY	SLOT EMPTY	SLOT EMPTY
	L	NOT USED	ø5 5C	ø6 6B	NOT USED										

EX.: 1A, 2A, ETC. = LOOP NO.'S

FS = FLASH SENSE
ST = STOP TIME

INPUT FILE CONNECTION & PROGRAMMING CHART

LOOP NO.	LOOP TERMINAL	INPUT FILE POS.	PIN NO.	INPUT ASSIGNMENT NO.	DETECTOR NO.	NEMA PHASE	CALL	EXTEND	FULL TIME DELAY	STRETCH TIME	DELAY TIME
1A	TB2-1,2	I1U	56	18	1	1	Y	Y			
1B	TB2-5,6	I2U	39	1	2	1	Y	Y			15
2A	TB2-7,8	I2L	43	5	12	2	Y	Y			
2B	TB2-9,10	I3U	63	25	32	2	Y	Y			
2C	TB2-11,12	I3L	76	38	42	2	Y	Y			
3A	TB4-5,6	I5U	58	20	3	3	Y				3
3B	TB6-5,6	I8U	49	11	24	3	Y				
4A	TB4-9,10	I6U	41	3	4	4	Y	Y			
4B	TB4-11,12	I6L	45	7	14	4	Y	Y			
5A	TB3-1,2	J1U	55	17	5	5	Y	Y			
5B	TB3-5,6	J2U	40	2	6	5	Y	Y			
5C	TB3-7,8	J2L	44	6	16	5	Y	Y			15
6A	TB3-9,10	J3U	64	26	36	6	Y	Y			
6B	TB3-11,12	J3L	77	39	46	6	Y	Y			
6C	TB5-1,2	J4U	48	10	26	6	Y	Y			
PED PUSH BUTTONS											
P21,P22	TB8-4,6	I12U	67	29	PED 2	2 PED					

NOTE:
INSTALL DC ISOLATOR IN INPUT FILE SLOT I12.

INPUT FILE POSITION LEGEND: J2L
FILE J
SLOT 2
LOWER

THIS ELECTRICAL DETAIL IS FOR
THE SIGNAL DESIGN: 03-0895
DESIGNED: Nov 2019
SEALED: 11-25-2019
REVISED: N/A

Prepared in the offices of:
RAMEY KEMP & ASSOCIATES, INC.
Transportation Engineers
5808 Farlington Place, Suite 100
Raleigh, North Carolina 27603
919-872-5115 Tel, 919-878-5416 Fax,
www.rameykemp.com

Electrical Detail

DOCUMENT NOT CONSIDERED FINAL UNLESS ALL SIGNATURES COMPLETED

ELECTRICAL AND PROGRAMMING DETAILS FOR:

NC Transportation Mobility and Safety Division
Traffic Engineering Branch
NC DEPARTMENT OF TRANSPORTATION
Signals Management Section

750 N.Greenfield Pkwy,Garner,NC 27529

US 17 (Military Cutoff Road)
at
Forum Shopping Center/
Parker Farm Drive

Division 3 New Hanover County Wilmington

PLAN DATE: November 2019	REVIEWED BY: WJ Hamilton
PREPARED BY: A Andrews	RKA PROJ. NO: 19258 (040)

REVISIONS	INIT.	DATE

SEAL
NORTH CAROLINA PROFESSIONAL SEAL 32396 ENGINEER WILLIAM J. HAMILTON

DocuSigned by: William J. Hamilton 40560D70A5E4A4...
11/25/19
SIGNATURE DATE

SIG. INVENTORY NO. 03-0895

11/25/2019
C:\Users\gnw03-0895_ele.dgn
User:lstiff

DocuSign Envelope ID: 8BEE47C3-CECA-4717-8B72-8C77D2788807

PROJECT NO.	SHEET NO.
U-5710A	Sig.7.0

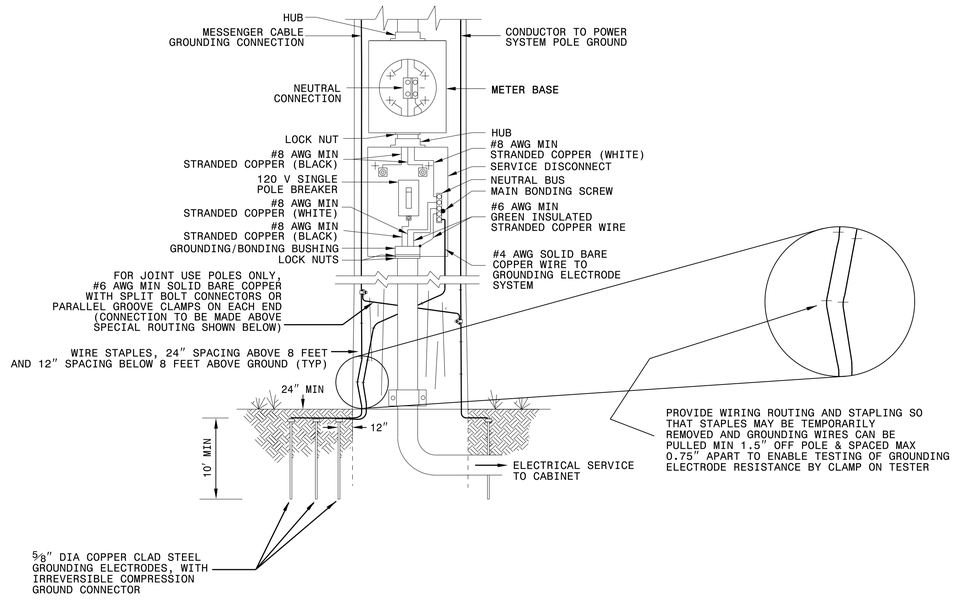

1-18

STATE OF NORTH CAROLINA
DEPT. OF TRANSPORTATION
DIVISION OF HIGHWAYS
RALEIGH, N.C.

ENGLISH STANDARD DRAWING FOR

ELECTRICAL SERVICE GROUNDING

GROUNDING AND BONDING

SHEET 1 OF 1

1700D01

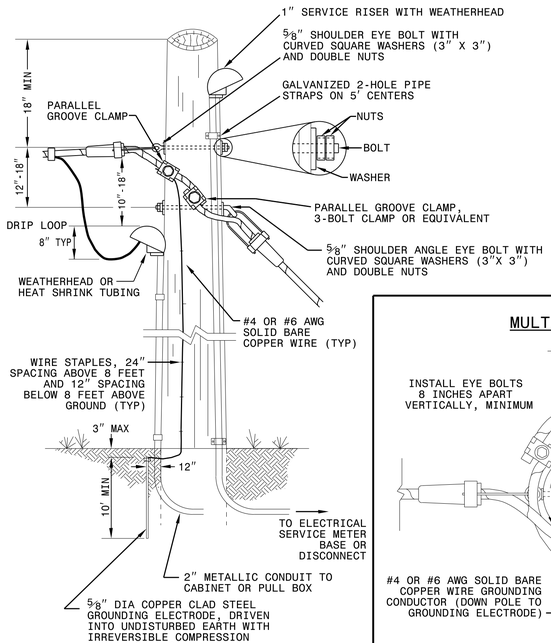

1-18

STATE OF NORTH CAROLINA
DEPT. OF TRANSPORTATION
DIVISION OF HIGHWAYS
RALEIGH, N.C.

ENGLISH STANDARD DRAWING FOR

WOOD POLES

METHODS OF ATTACHMENT AND GROUNDING

SHEET 1 OF 1

1720D01

DOCUMENT NOT CONSIDERED FINAL UNLESS ALL SIGNATURES COMPLETED

See Plate for Title

Prepared in the Offices of:

Transportation Mobility and Safety Division
STATE OF NORTH CAROLINA DEPARTMENT OF TRANSPORTATION
ITS & Signals Unit

750 N. Greenfield Parkway
Garner, NC 27529

SEAL

NORTH CAROLINA PROFESSIONAL SEAL 032108 ENGINEER MOHD A. ASLAMI

DocuSigned by: Mohd Aslami
5D90B0BA6DBB6495...

10/11/2017
DATE

11-OCT-2017 08:56
U:\NCDOT3\Std Drawings\Plate Sheets\2018_Plate Sheet .dgn
rwhough

DocuSign Envelope ID: 8BEE47C3-CECA-4717-8B72-8C77D2788807

PROJECT NO.	SHEET NO.
U-5710A	Sig.7.1

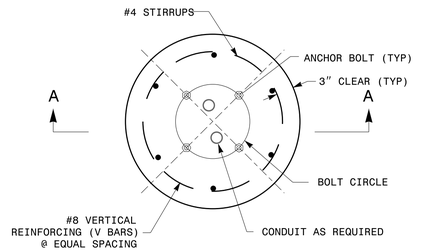

PEDESTAL FOUNDATION - PLAN VIEW

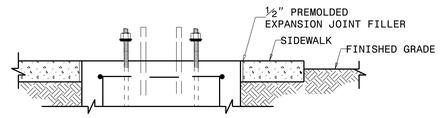

PEDESTAL FOUNDATION DETAILS FOR SIDEWALK

NOTES:

1. CAST FOUNDATION AGAINST UNDISTURBED SOIL WHEREVER CONDITIONS PERMIT. IN UNSTABLE SOIL, CAST-IN-PLACE TUBE FORMS ARE ALLOWED WITH APPROVAL.
2. COMPLY WITH APPLICABLE PROVISIONS OF SECTION 825 FOR CONCRETE CONSTRUCTION.
3. USE CLASS "A" CONCRETE THAT MEETS THE REQUIREMENTS OF SECTION 1000 WITH A COMPRESSION STRENGTH AT 28 DAYS OF F'c= 3000 PSI (MIN.).
4. USE ASTM GRADE 60 DEFORMED BARS FOR ALL REINFORCING STEEL.
5. GRADE IS ASSUMED TO BE (8H:1V) OR FLATTER. FOUNDATION SIZE AND DEPTHS ARE BASED ON THE FOLLOWING SOIL DESIGN PARAMETERS:
   A. SANDY TYPE SOIL
   B. NO GROUND WATER WITHIN 5'-0" OF SURFACE ELEVATION
   C. WIND SPEED NOT TO EXCEED 140 MPH

   IF ACTUAL CONDITIONS VARY SUBSTANTIALLY FROM THOSE ASSUMED, THE FOUNDATION DEPTH MAY BE ADJUSTED. IN THIS CASE, CONTACT THE ENGINEER.
6. MAINTAIN AT LEAST 3" COVER ON ALL REINFORCEMENT.
7. ORIENT CONDUIT AS REQUIRED BY THE DESIGN OR AS DICTATED BY FIELD CONDITIONS.
8. USE ADHESIVE ANCHOR FOR THREADED COUPLING INSERT. FOR TYPE I MINIMUM DEPTH NECESSARY IS 0'-4½" AND FOR TYPE II MINIMUM DEPTH NECESSARY IS 0'-6⅝". FOLLOW MANUFACTURER'S INSTALLATION INSTRUCTIONS.

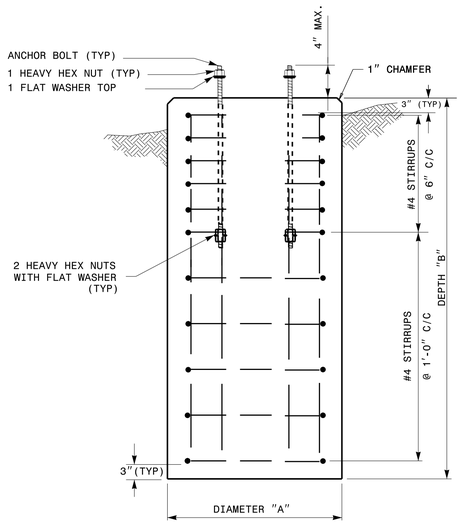

TYPES I, II & III

SECTION A-A

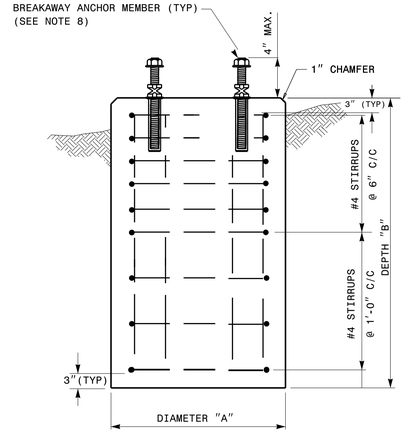

TYPES I & II ONLY

SECTION A-A

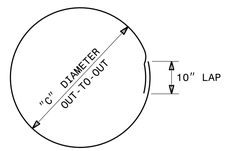

CLOSED HOOPS

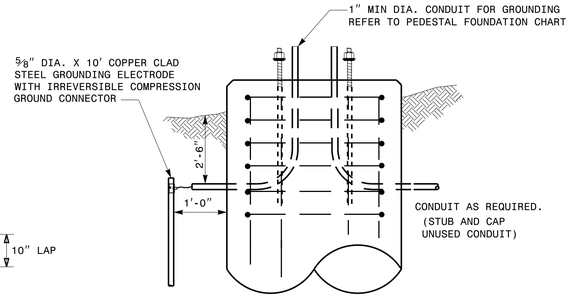

GROUNDING & CONDUIT DETAIL

PEDESTAL FOUNDATION TYPE AND SIZE

TYPE	PEDESTAL DESCRIPTION	SIZE			ANCHOR BOLT		INSTALL GROUNDING SYSTEM (YES/NO)
		DIAMETER "A" FT	DEPTH "B" FT	CONCRETE VOLUME CY	DIAMETER (MIN.) IN	LENGTH FT-IN	
I	PEDESTRIAN PUSHBUTTON	2'-0"	3'-6"	.41	½	1'-6"	NO
II	NORMAL-DUTY	2'-0"	5'-0"	.58	¾	2'-0"	YES
III	HEAVY-DUTY	2'-6"	7'-0"	1.27	1	4'-0"	YES

REINFORCING STEEL SCHEDULE

TYPE	V-BAR				STIRRUP								TOTAL STEEL WEIGHT LBS
	SIZE #	QTY	LENGTH	WEIGHT LBS	SIZE #	QUANTITY VERTICAL SPACING ON 6" CENTERS	QUANTITY VERTICAL SPACING ON 12" CENTERS	QUANTITY TOTAL	LENGTH	DIAMETER "C" FT	OVERLAP MIN.	WEIGHT LBS	
I	8	6	3'-0"	56	4	0	4	4	5'-7"	1'-6"	0'-10"	15	71
II	8	6	4'-6"	86	4	5	3	8	5'-7"	1'-6"	0'-10"	30	116
III	8	6	6'-6"	122	4	7	4	11	7'-2"	2'-0"	0'-10"	53	175

STATE OF NORTH CAROLINA
DEPT. OF TRANSPORTATION
DIVISION OF HIGHWAYS
RALEIGH, N.C.

1-18

ENGLISH STANDARD DRAWING FOR

PEDESTALS

FOUNDATIONS

SHEET 1 OF 1

1743D01

See Plate for Title

Prepared in the Offices of:

Transportation Mobility and Safety Division
ITS & Signals Unit
STATE OF NORTH CAROLINA DEPARTMENT OF TRANSPORTATION

750 N. Greenfield Parkway
Garner, NC 27529

SEAL
NORTH CAROLINA
PROFESSIONAL
SEAL
028094
ENGINEER
DEBESH C. SARKAR

DocuSigned by:
Debesh C. Sarkar
44E8E32E147E4C4...
10/11/2017
DATE

DOCUMENT NOT CONSIDERED
FINAL UNLESS ALL
SIGNATURES COMPLETED

11-OCT-2017 03:03
U:\NCDOT Std Drawings\Plate Sheets\2018_Plate Sheet .dgn
rwhough

DocuSign Envelope ID: 8BEE47C3-CECA-4717-8B72-8C77D2788807

POLE STANDARDS

NCDOT METAL POLES

STATE OF NORTH CAROLINA
DIVISION OF HIGHWAYS

PROJECT I.D. NO.	SHEET NO.
U-5710A	Sig.M1

STANDARD DRAWINGS FOR ALL METAL POLES

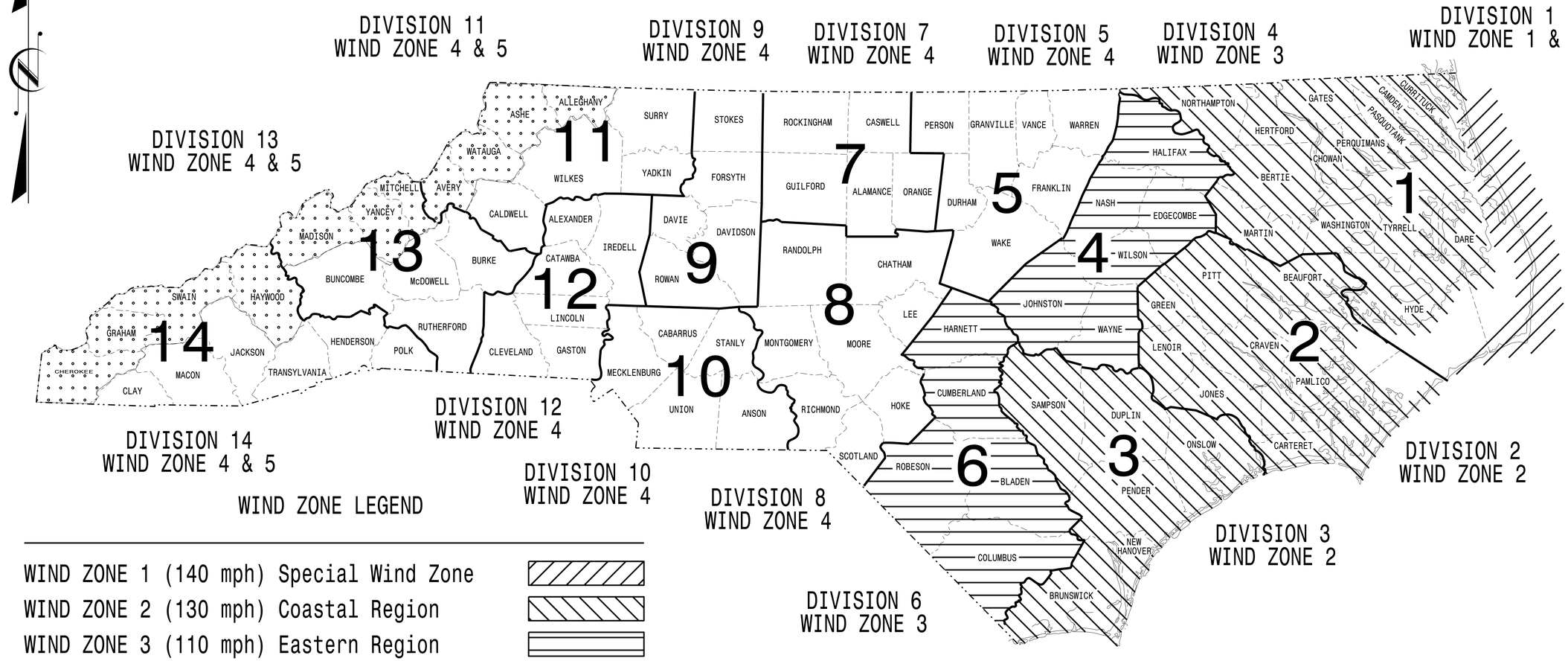

WIND ZONE LEGEND

WIND ZONE 1 (140 mph) Special Wind Zone	
WIND ZONE 2 (130 mph) Coastal Region	
WIND ZONE 3 (110 mph) Eastern Region	
WIND ZONE 4 (90 mph) Central & Mtn. Region	
WIND ZONE 5 (120 mph) Special Wind Zone	

https://connect.ncdot.gov/resources/safety/Pages/ITS-Design-Resources.aspx

Prepared In the Offices of:

Transportation Mobility and Safety Division
State of North Carolina · Department of Transportation
Signal Design Section

750 N.Greenfield Pkwy.
Garner,NC 27529

Designed in conformance with the latest 2015 Interim to the 6th Edition 2013

AASHTO

Standard Specifications for Structural Supports for Highway Signs, Luminaires, and Traffic Signals

INDEX OF PLANS

DRAWING NUMBER	DESCRIPTION
Sig. M 1	Statewide Wind Zone Map
Sig. M 2	Typical Fabrication Details–All Metal Poles
Sig. M 3	Typical Fabrication Details–Strain Poles
Sig. M 4	Typical Fabrication Details–Mast Arm Poles
Sig. M 5	Typical Fabrication Details–Mast Arm Connection
Sig. M 6	Typical Fabrication Details–Strain Pole Attachments
Sig. M 7	Construction Details–Foundations
Sig. M 8	Standard Strain Pole Foundation–All Soil Conditions

NCDOT CONTACTS:

MOBILITY AND SAFETY DIVISION – ITS AND SIGNALS UNIT

M.M. MCDIARMID, P.E. – STATE ITS AND SIGNALS ENGINEER

J. P. GALLOWAY, P.E. – STATE SIGNALS ENGINEER

D.C. SARKAR, P.E. – ITS AND SIGNALS SENIOR STRUCTURAL ENGINEER

SEAL

NORTH CAROLINA PROFESSIONAL SEAL 028094 ENGINEER DEBESH C. SARKAR

DocuSigned by: Debesh C. Sarkar 44E8E3... SIGNATURE

10/11/2017 DATE

DocuSign Envelope ID: 8BEE47C3-CECA-4717-8B72-8C77D2788807

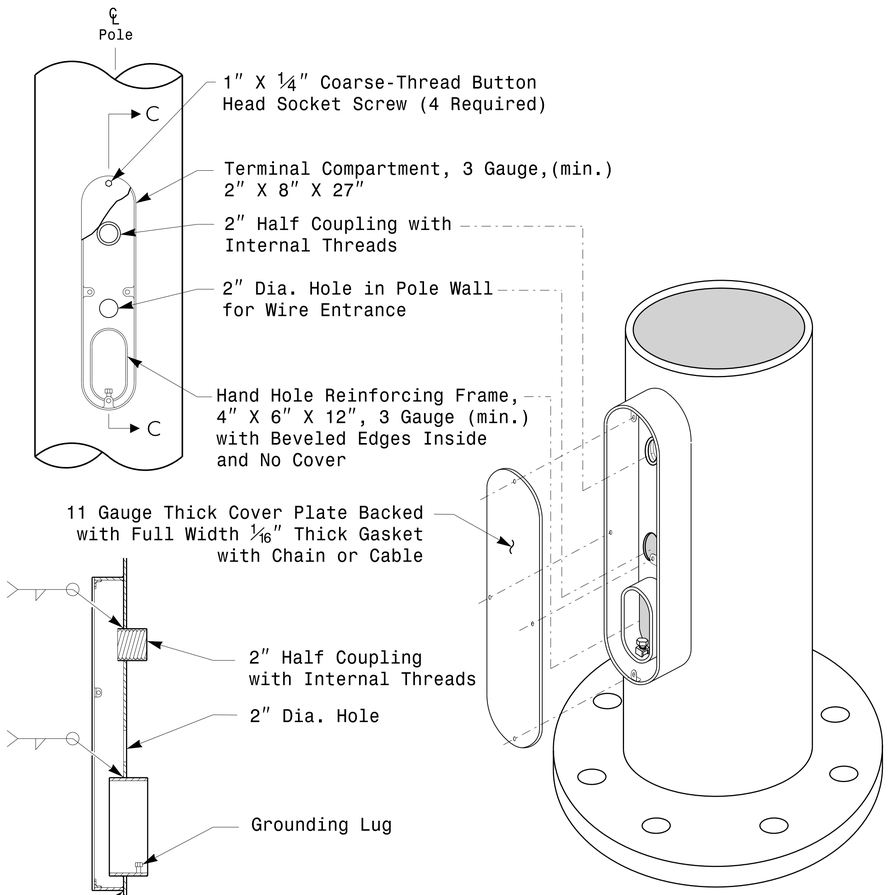

Section C-C

Note: Unless otherwise specified, locate Terminal Compartment 1 foot above the pole base plate at 180 degrees on the pole's radial index.

Terminal Compartment Detail

MFG _____ MFG. DATE: MM/YY
SHAFT D/T/L/Y ----/----/----/----
ARM-A D/T/L/Y ----/----/----/----
----/----/----/----
ARM-B D/T/L/Y ----/----/----/----
----/----/----/----
A.B. DIA./B.C./L/Y ----/----/----/----
NCDOT SIG. INV. NO. _ _ _ _ _ _ _ _
NCDOT POLE NO. _ _ _ _ _ _ _ _

Shaft I.D. Tag
(Provide on Shaft of Strain Poles and Mast Arm Poles Shaft)

MFG _____ MFG. DATE: MM/YY
SECTION D/T/L/Y ----/----/----/----
NCDOT SIG. INV. NO. _ _ _ _ _ _ _ _
NCDOT POLE NO. _ _ _ _ _ _ _ _

Arm I.D. Tag
(Provide on each section of a multi-section mast arm.)

Notes:
1) D= Diameter, T= Thickness, L= Length, Y= Yield Strength
2) A.B. = Anchor Bolt
3) B.C. = Bolt Circle of Anchor Bolts
4) If Custom Design, use "NCDOT STANDARD" line for Signal Inv. Number and pole I.D. number
5) See drawing M3 and M4 for mounting positions of I.D. tags.

Identification Tag Details

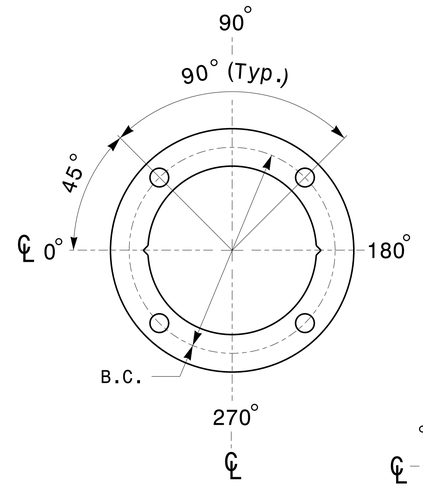

4 Bolt Pattern

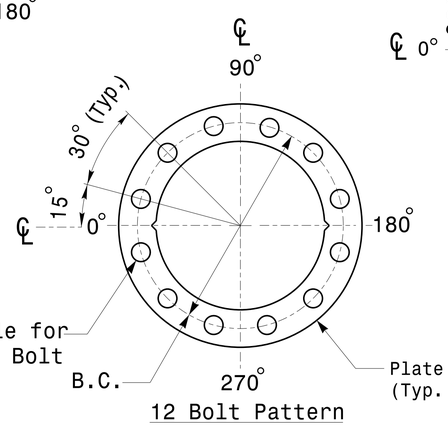

2¼"" dia. hole for 2"dia. Anchor Bolt

Plate Width = 4″ min. (Typ. for all plates)

12 Bolt Pattern

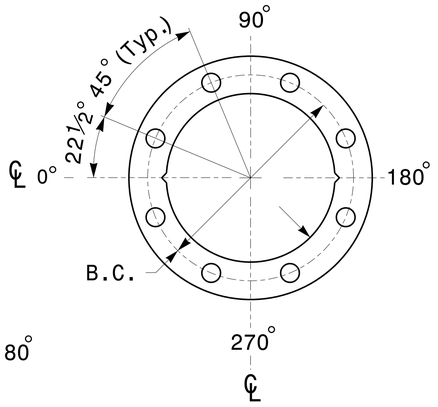

8 Bolt Pattern

Construct Templates and Plates from ¼″ min. thick Steel. Galvanizing is not required.

Base Plate Template and Anchor Bolt Lock Plate Details

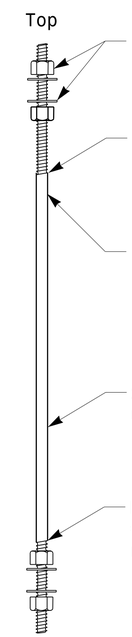

Anchor Bolt Detail

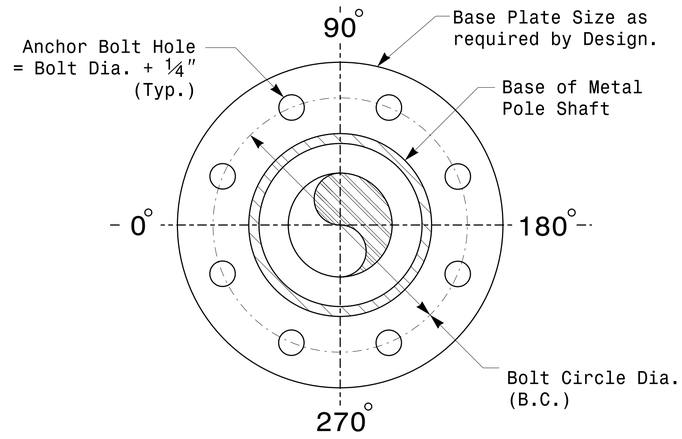

Note: Base plate may be circular,octagonal,square or rectangular in shape.

Typical Base Plate Detail

Fabrication Details – All Metal Poles

PROJECT ID. NO.	SHEET NO.
U-5710A	Sig.M2

Prepared in the Offices of: Transportation Mobility and Safety Division, North Carolina Department of Transportation, Signal Design Section
750 N.Greenfield Pkwy,Garner,NC 27529

SCALE 0 NA NONE

Typical Fabrication Details For All Metal Poles

PLAN DATE:	OCTOBER 2017	DESIGNED BY:	C.F.ANDREWS
PREPARED BY:	N. BITTING	REVIEWED BY:	D.C. SARKAR

REVISIONS	INIT.	DATE

SEAL
NORTH CAROLINA PROFESSIONAL SEAL 028094 ENGINEER DEBESH C. SARKAR

DocuSigned by: Debesh C. Sarkar 44EBE32B5B4C... SIGNATURE

10/11/2017 DATE

11-OCT-2017 08:30
S:\ITS&SU\ITS Signals\Signal Design Section\Eastern Region\MM Sheets\2016\2014 Sig.M2 Std. Fabrication Details-All Poles..dgn
rstrickler

DocuSign Envelope ID: 8BEE47C3-CECA-4717-8B72-8C77D2788807

PROJECT ID. NO.	SHEET NO.
U-5710A	Sig.M3

Details – Strain Poles

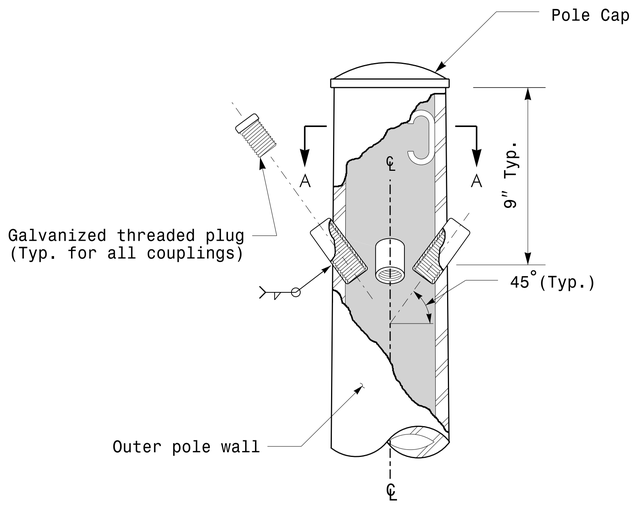

Cable Entrances at Top of Pole

Note:
1. Opening in pole base plate shall be equal to pole base inside diameter minus 3½" but shall not be less than 8½".

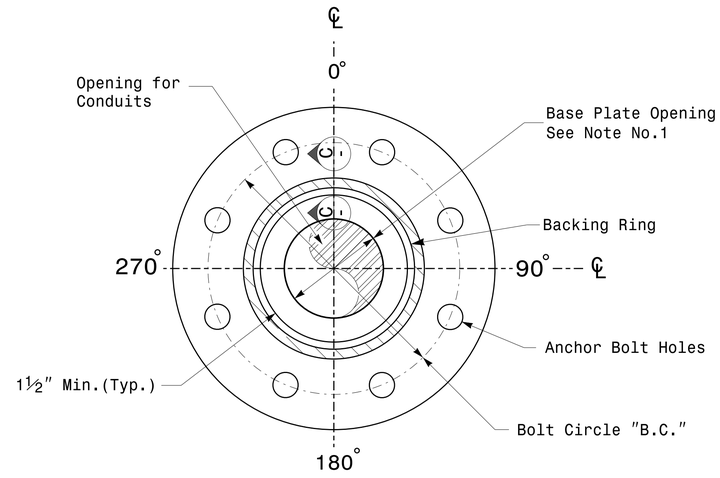

Section B-B

Pole Base Plate Details
(8 and 12 Bolt Pattern)

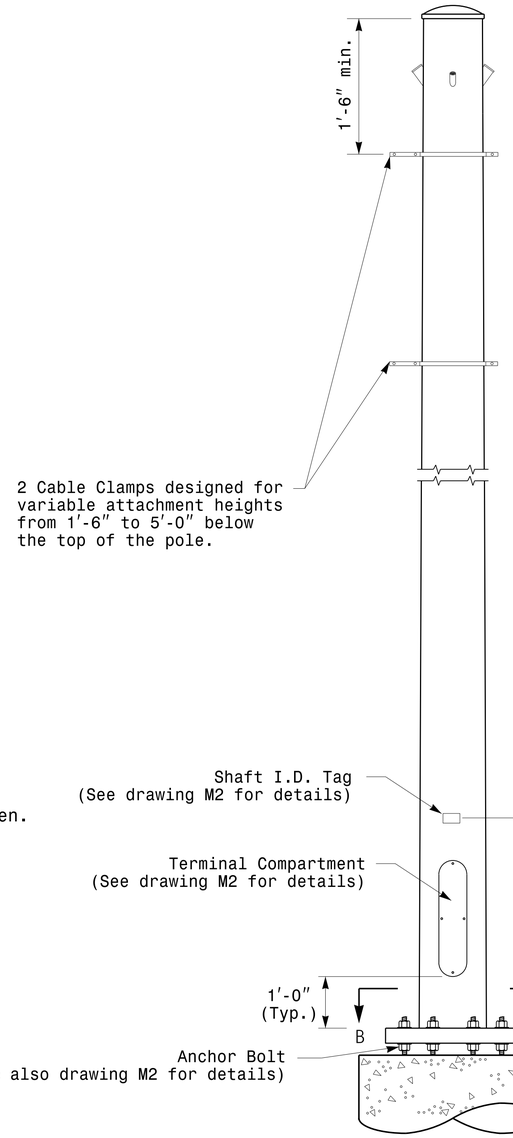

Monotube Strain Pole

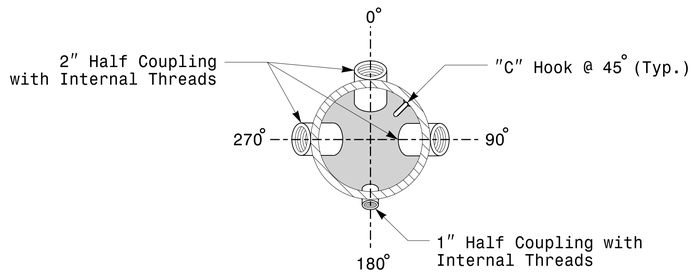

Section A-A

Radial Orientation for Factory Installed
Accessories at Top of Pole

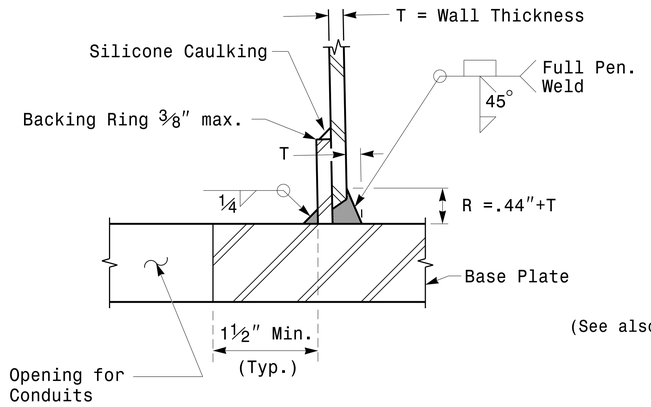

Section C-C
(Pole Attachment to Base Plate)

Full-Penetration
Groove Weld Detail

Prepared in the Offices of:
Transportation Mobility and Safety Division
Traffic Engineering Branch
Signal Design Section
750 N.Greenfield Pkwy,Garner,NC 27529

Typical Fabrication Details
For
Strain Poles

PLAN DATE:	OCTOBER 2017	DESIGNED BY:	K.C.DURIGON
PREPARED BY:	N. BITTING	REVIEWED BY:	D.C. SARKAR

REVISIONS	INIT.	DATE

SCALE
0 NA
NONE

SEAL
NORTH CAROLINA
PROFESSIONAL
SEAL
028094
ENGINEER
DEBESH C. SARKAR

DocuSigned by:
Debesh C. Sarkar
44EBE3B3D3A74EF...
SIGNATURE

10/11/2017
DATE

11-OCT-2017 08:25
S:*ITS&SW\ITS Signals\Signal Design Section\Eastern Region\MJ Sheets\2016\2014 Sig.M3 Std. Fabrication Details-Strain Poles.dgn
rmathisdgn

DocuSign Envelope ID: 8BEE47C3-CECA-4717-8B72-8C77D2788807

PROJECT ID. NO.	SHEET NO.
U-5710A	Sig.M4

Fabrication Details – Mast Arm Poles

Note:
1. Opening in pole base plate shall be equal to pole base inside diameter minus 3½" but shall not be less than 8½".

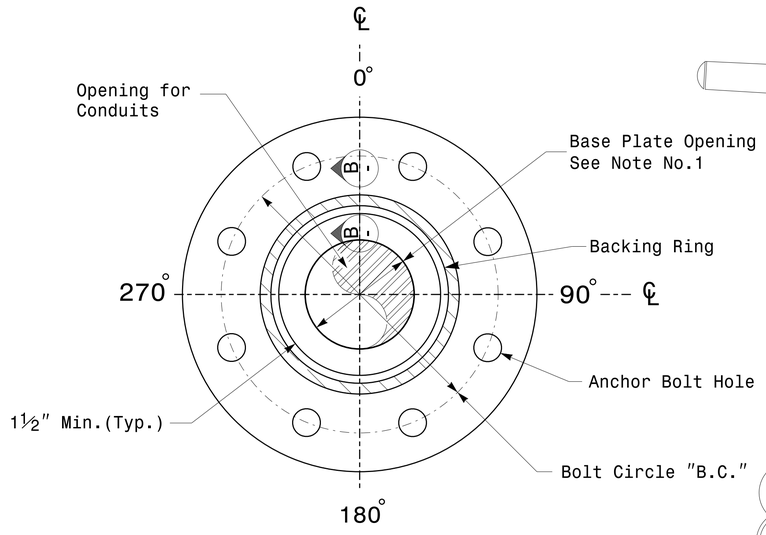

Section A-A

Pole Base Plate Details

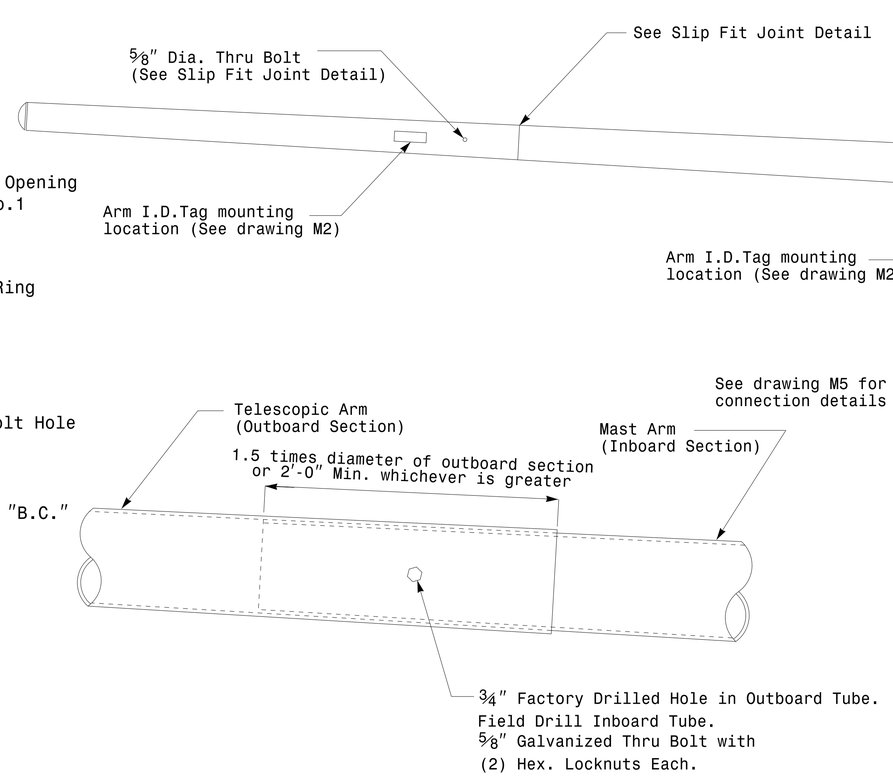

Slip Fit Joint Detail for Mast Arm

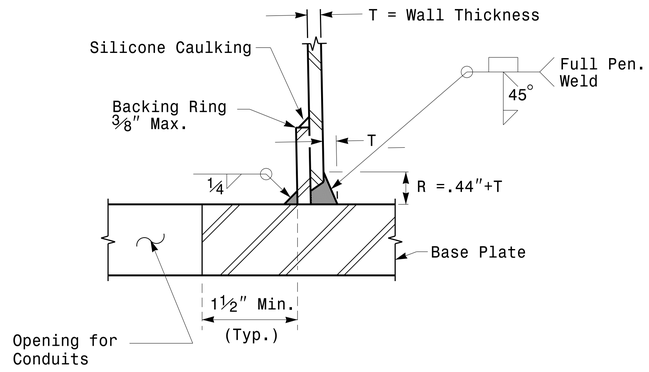

Section B-B

(Pole Attachment to Base Plate)

Full-Penetration Groove Weld Detail

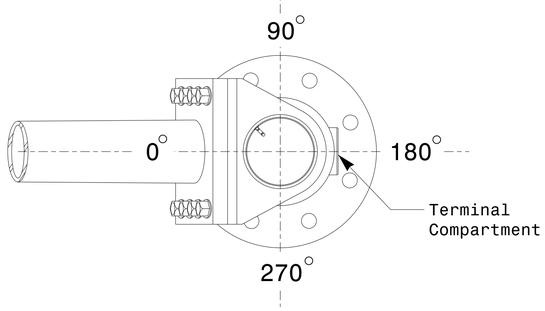

Mast Arm Radial Orientation

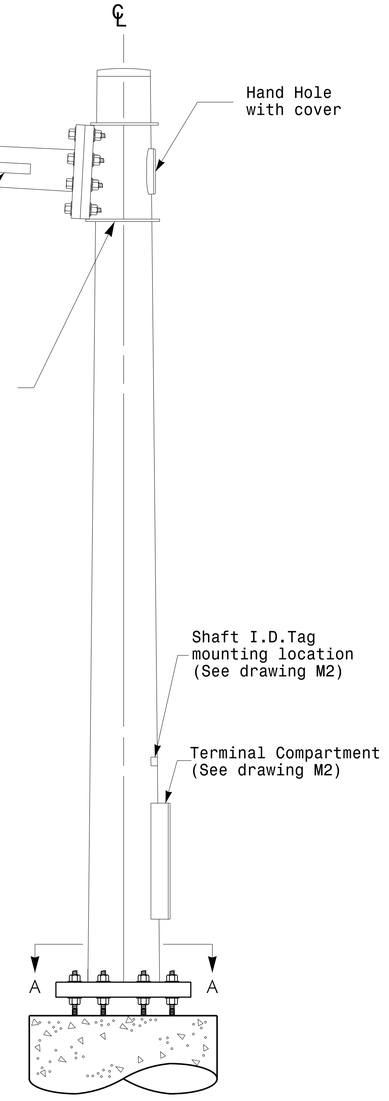

Mast Arm Pole

Prepared in the Offices of:
Transportation Mobility and Safety Division
NORTH CAROLINA DEPARTMENT OF TRANSPORTATION
Signal Design Section
750 N.Greenfield Pkwy.Garner,NC 27529

SCALE: 0 NA — NONE

Typical Fabrication Details For Mast Arm Poles

PLAN DATE:	OCTOBER 2017	DESIGNED BY:	K.C.DURIGON
PREPARED BY:	N. BITTING	REVIEWED BY:	D.C. SARKAR

REVISIONS	INIT.	DATE

SEAL
NORTH CAROLINA PROFESSIONAL SEAL 028094 ENGINEER DEBESH C. SARKAR

DocuSigned by: Debesh C. Sarkar 44EBE3B5B5A47...
SIGNATURE

10/11/2017
DATE

11-OCT-2017 08:33
S:\TTSGSU\ITS Signals\Signal Design Section\Eastern Region\MS Sheets\2016\2014 Sig.M4 Std. Fabrication Details-Mast Arm Poles.dgn
rstalnaker

DocuSign Envelope ID: 8BEE47C3-CECA-4717-8B72-8C77D2788807

Welded Ring Stiffened Mast Arm Connection

PROJECT ID. NO.	SHEET NO.
U-5710A	Sig.M5

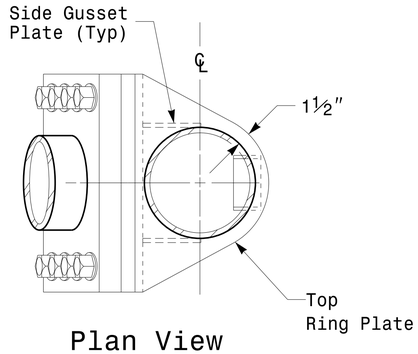

Plan View

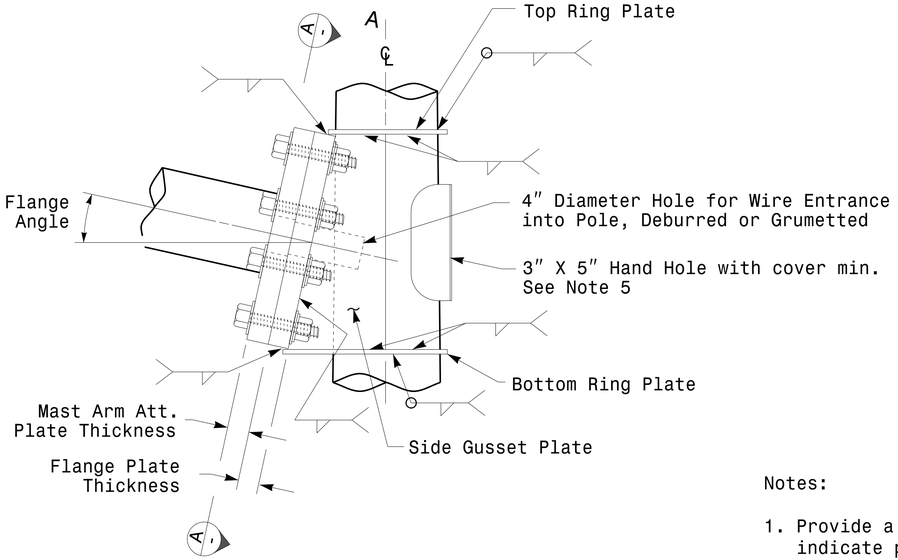

Side Elevation View

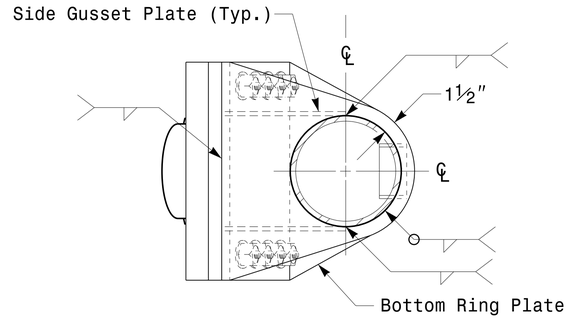

Bottom View

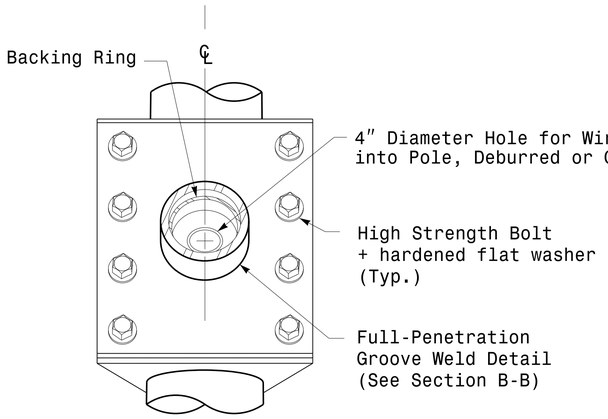

Front Elevation View

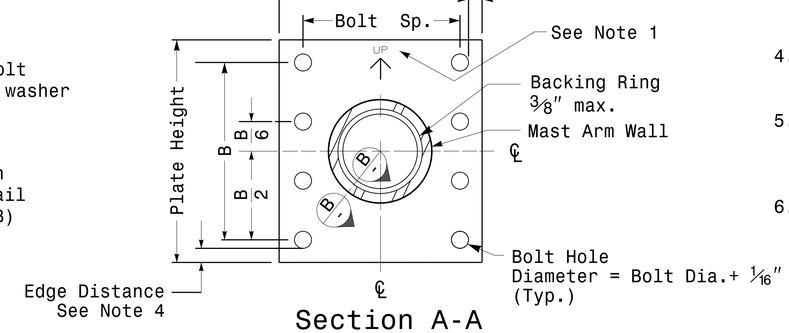

Section A-A

Mast Arm Attachment Plate

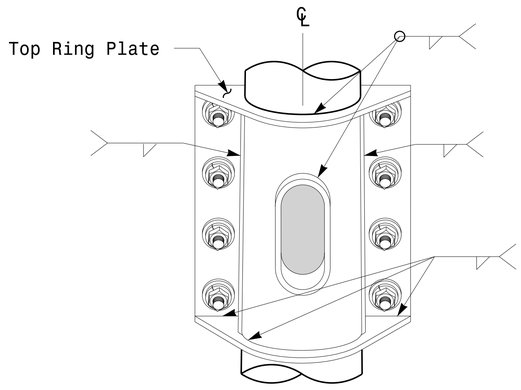

Back Elevation View

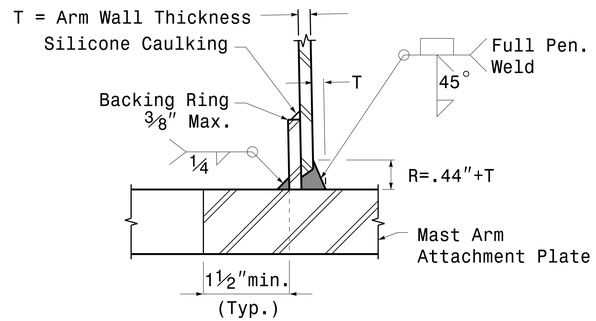

Section B-B

Full-Penetration Groove Weld Detail

Notes:

1. Provide a permanent means of identification above the mast arm to indicate proper attachment orientation of the mast arm.
2. Designer will determine the size of all structural components, plates, fasteners, and welds shown unless they are already specified.
3. Fabricator is responsible for providing appropriate holes at drainage points to drain galvanizing materials.
4. For minimum edge distance follow AISC Table J3.4 and J3.5. For nominal bolt hole size use Table J3.3.
5. Provide upper handhole as necessary when shaft extensions are required for luminaire arms or camera. For poles without luminaires/camera, wiring can be done through the top of pole.
6. Allowable range of flange tilt angle will vary from 0° to as required.

Fabrication Details – Mast Arm Connection

Prepared in the Offices of:
Transportation Mobility and Safety Division
Signal Design Section
750 N.Greenfield Pkwy.Garner,NC 27529

Typical Fabrication Details For Mast Arm Connection To Pole

PLAN DATE:	OCTOBER 2017	DESIGNED BY:	C.F.ANDREWS
PREPARED BY:	N. BITTING	REVIEWED BY:	D.C. SARKAR

REVISIONS	INIT.	DATE

SCALE 0 NA NONE

SEAL
NORTH CAROLINA PROFESSIONAL SEAL 028094 ENGINEER DEBESH C. SARKAR

DocuSigned by: Debesh C. Sarkar 44EBE3E5A0A44... SIGNATURE

10/11/2017 DATE

11-OCT-2017 08:35
S:\TSAS\Traffic Signal\Signal Design Section\Eastern Region\MM Sheets\2016\2014 Sig.M5 Std. Connection Fabrication Details-Mast Arm Poles.dgn
rsilhavy

DocuSign Envelope ID: 8BEE47C3-CECA-4717-8B72-8C77D2788807

PROJECT ID. NO.	SHEET NO.
U-5710A	Sig.M6

Strain Pole Attachments – Fabrication Details –

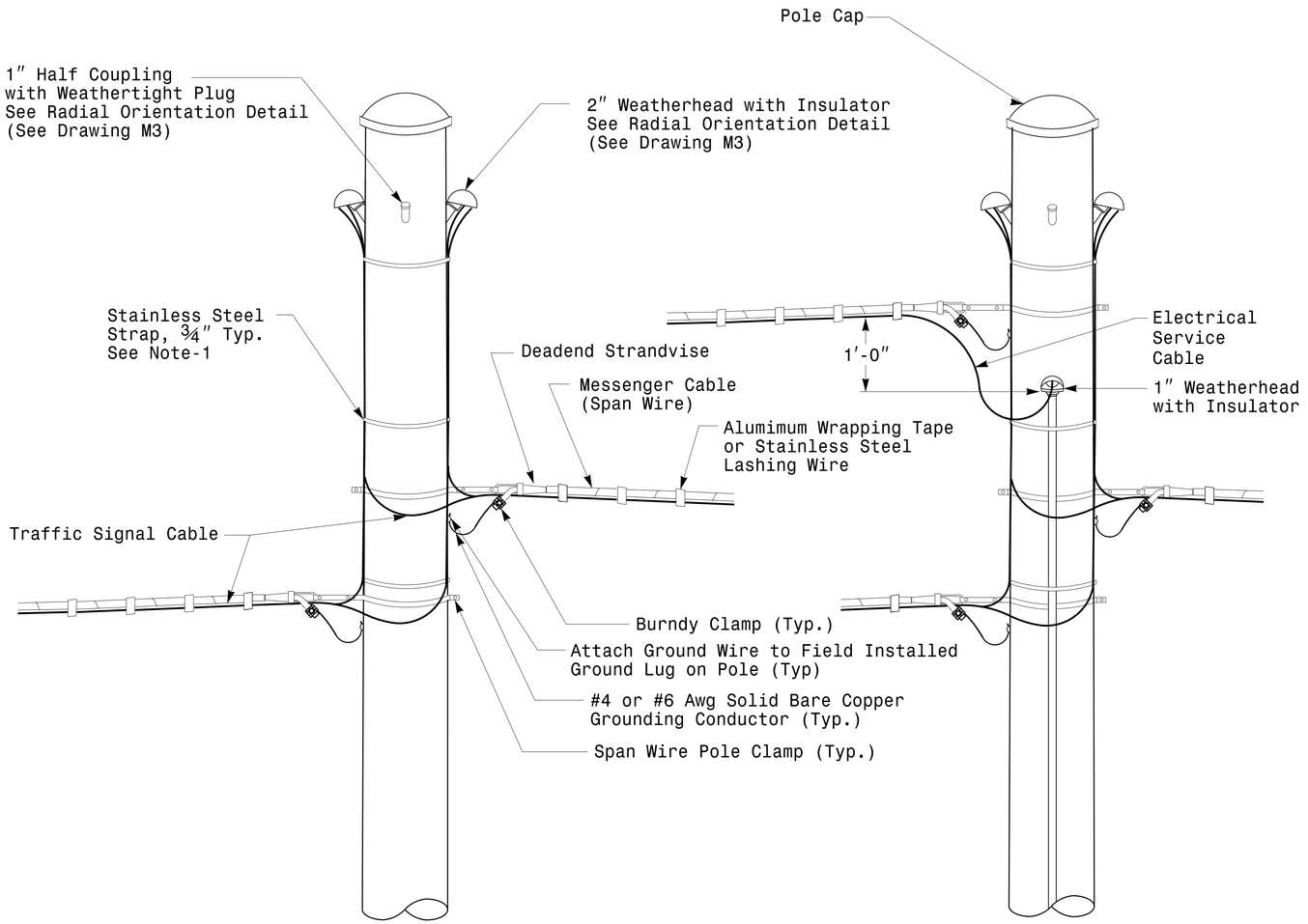

Strain Pole Attachments

NOTE:

1. Strap all signal cables to the side of the pole with ¾″ stainless steel straps when the distance between the spanwire attachment clamp and the weatherheads exceeds 3′-0″.
2. Provide minimum two spanwire pole clamps per pole.
3. It is prohibited to attach two span wires at one pole clamp.
4. For general requirements refer to NCDOT Standard Specifications for Roadway and Structures, January 2018.

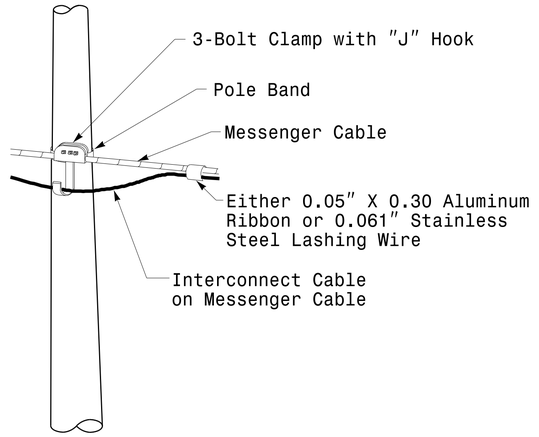

Attachment of Cable to Intermediate Metal Pole

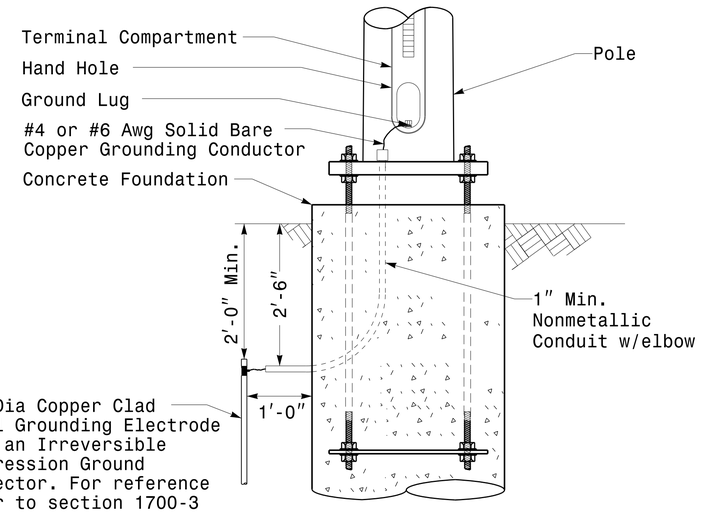

Metal Pole Grounding Detail For Strain Pole and Mast Arm

Prepared in the Offices of:
Transportation Mobility and Safety Division
Signal Design Section
750 N.Greenfield Pkwy.Garner.NC 27529

SCALE
0 NA
NONE

Typical Fabrication Details
For
Strain Pole Attachments

PLAN DATE:	OCTOBER 2017	DESIGNED BY:	C.F.ANDREWS
PREPARED BY:	N. BITTING	REVIEWED BY:	D.C. SARKAR

REVISIONS	INIT.	DATE

SEAL
NORTH CAROLINA PROFESSIONAL SEAL 028094 ENGINEER DEBESH C. SARKAR

DocuSigned by: Debesh C. Sarkar
SIGNATURE

10/11/2017
DATE

11-OCT-2017 08:36
S:\ITS&SU\ITS Signals\Signal Design Section\Eastern Region\MU Sheets\2016\2014 Sig_M6 Std. Fabrication Details-Strain Poles.dgn
rgithser

DocuSign Envelope ID: 8BEE47C3-CECA-4717-8B72-8C77D2788807

PROJECT ID. NO.	SHEET NO.
U-5710A	Sig.M7

Construction Details – Foundations

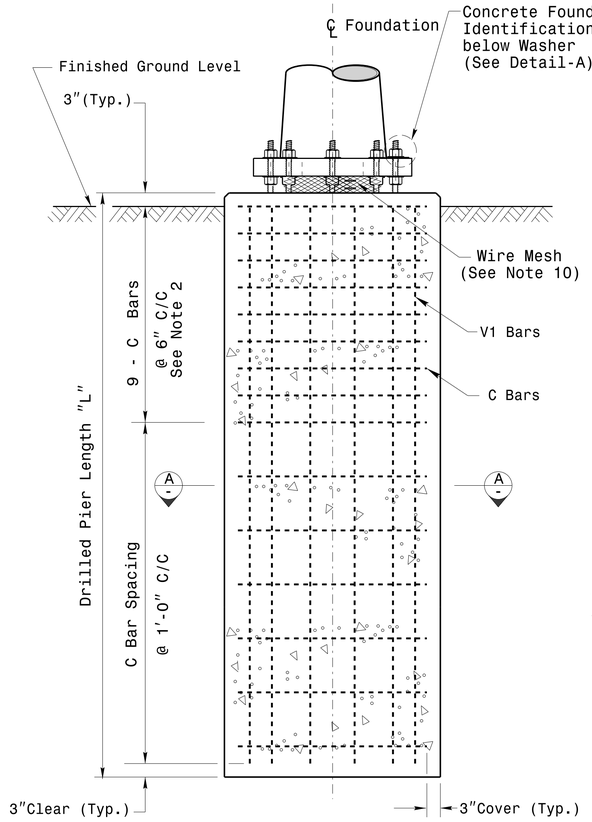

Concrete Shaft Elevation

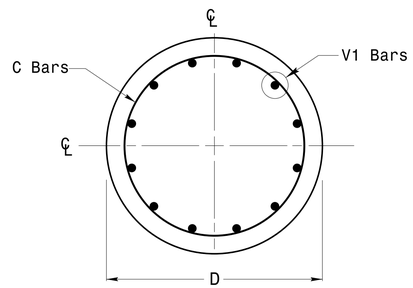

Section A-A

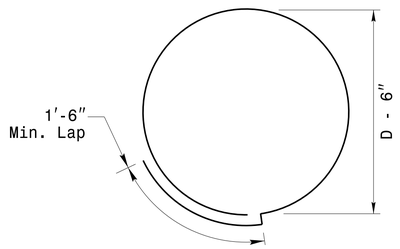

Typical "C" Bar Detail

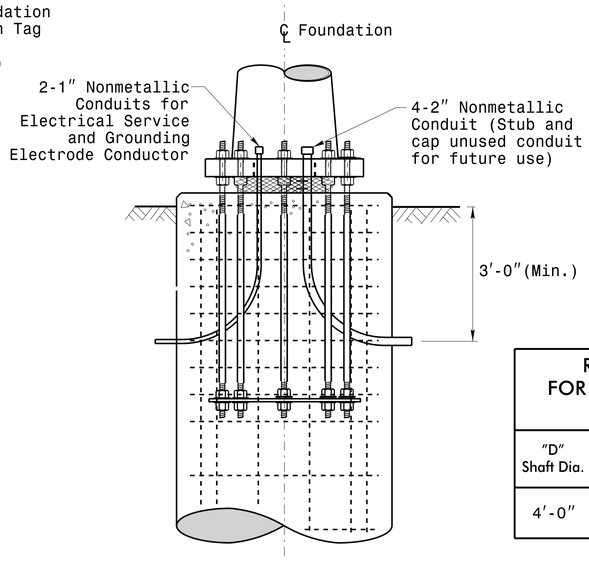

Typical Foundation Conduit Details

REINFORCING STEEL TABLE FOR STANDARD DRILL PIER SHAFT (4′–0″ DIAMETER)						
"D" Shaft Dia.	Conc. Volume (cu. yds.)	Bar Name	MIN.	Size	Type	Length
4′-0″	.465 x L	V1	—	#8	STR.	**
		C	*	#4	CIR.	12′-6″

* See Note No. 2
** See Note No. 3

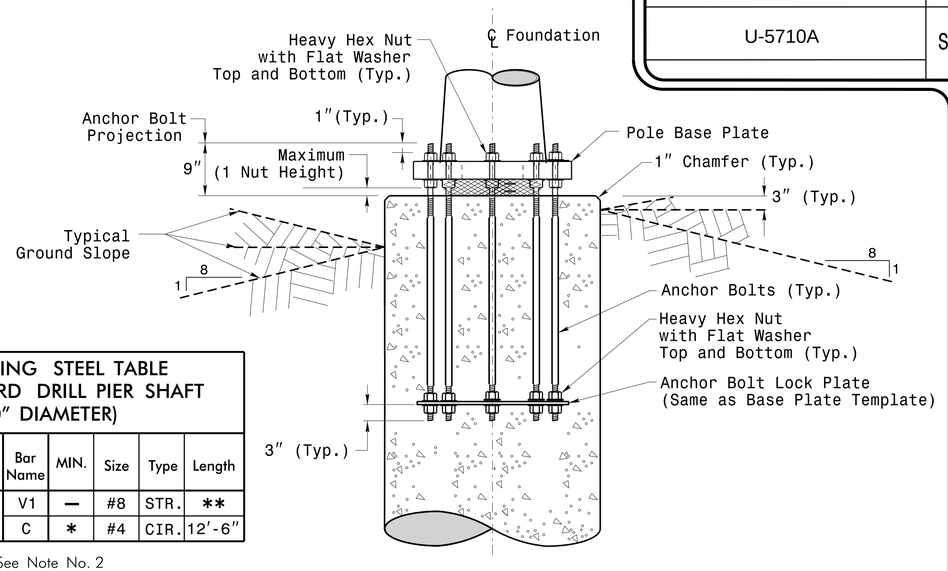

Typical Foundation Anchor Bolt Details

(Reinforcing Cage Not Shown for Clarity)

General Notes:

1. If actual subsurface conditions differ significantly from boring data contact the Engineer before excavating or placing concrete.
2. Circular tie reinforcing rings may be vertically adjusted by +/-3″ at a depth between 2′-0″ and 3′-0″ to facilitate the installation of electrical conduit entering in the cage.
3. For standard foundations, see sheet Sig. M8 for details. Vertical reinforcing bars (V1) may be horizontally adjusted by +/-3″ to facilitate the installation of electrical conduit entering into the cage.
4. Provide 2″ to 5″ foundation projection above ground level depending on the ground slope.
5. Unless otherwise shown, foundation designs are based on non-sloping level ground surfaces with slope ratios of 8:1 (H:V) or flatter. If actual ground line slopes are steeper contact the Engineer before excavating or placing concrete.
6. Construct foundations in accordance with NCDOT Standard Provisions SP09 R005- Foundations and Anchor Rod Assemblies for Metal Poles. All applicable 2018 NCDOT Standard Specifications are referenced in this provision. Refer to the NCDOT Resources/Specifications page located on the Connect NCDOT website.

   https://connect.ncdot.gov/resources/Specifications and Special Provisions.aspx
7. Use air entrained AA concrete mix with a compression strength of f′c=4500 psi.(min.) after 28 days.
8. Use ASTM A615 grade 60 deformed bars for all reinforcing steel. Maintain at least 3″ cover on all reinforcement.
9. Locate the Identification Tag on the top of the base plate, directly above the conduit's entry point.
10. Provide two layers of galvanized welded 23 gauge (0.25) 6″ wide 4 mesh wire around pipes under the base plate and secure it with ties if necessary.
11. Preferred location for the I.D. Tag is as shown in Detail-A; directly above the conduit entering the foundation.

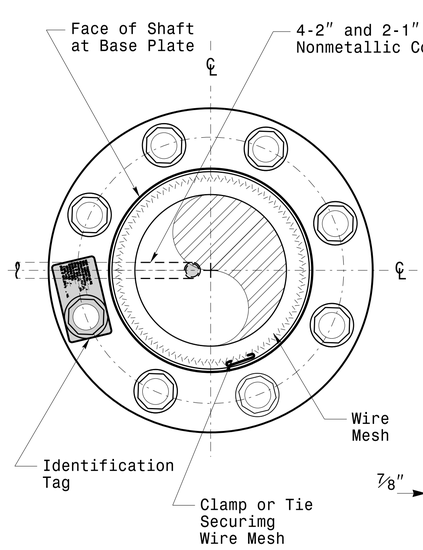

D = Diameter
L = Length/Depth
mm = Month
yy = Year

Detail-A

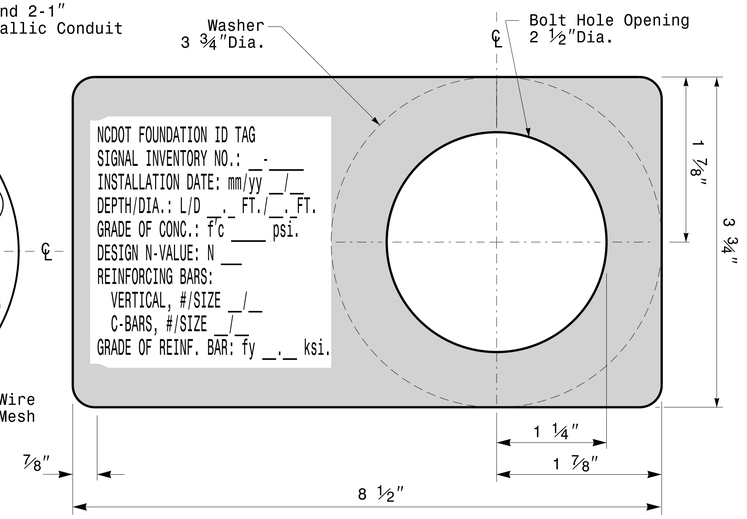

Concrete Foundation Identification Tag Details

Prepared in the Offices of:
Transportation Mobility and Safety Division
Traffic Engineering Branch
Signal Design Section
750 N.Greenfield Pkwy.Garner,NC 27529

Construction Details For Foundations

PLAN DATE:	OCTOBER 2018	DESIGNED BY:	C.B.COGDELL
PREPARED BY:	N. BITTING	REVIEWED BY:	D.C. SARKAR

SCALE: 0 NA NONE

REV. NO.	COMMENTS	INIT.	DATE
1	Revised Foundation Tag Details	N.B.	5/11/2015

SEAL
NORTH CAROLINA PROFESSIONAL SEAL 028094 ENGINEER DEBESH C. SARKAR

DocuSigned by: Debesh C. Sarkar 4AE8E3D3... SIGNATURE

10/11/2017 DATE

11-OCT-2017 08:37
S:\ITS&SU\ITS Signals\Signal Design Section\Eastern Region\MM Sheets\2016\2014 Sig.M7 Std. Construction Details-Strain Poles.dgn
rgardner

DocuSign Envelope ID: 8BEE47C3-CECA-4717-8B72-8C77D2788807

SOIL CONDITION

PROJECT ID. NO.	SHEET NO.
U-5710A	Sig.M8

		STANDARD STRAIN POLES						STANDARD FOUNDATIONS 48″ Diameter Drilled Pier Length (L) – Feet							Reinforcement			
					Reactions at the Pole Base			Clay				Sand			Longitudinal		Stirrups	
		Case No.	Pole Height (Ft.)	Base Plate BC (In.)	Axial (kip)	Shear (kip)	Moment (ft-kip)	Medium N-Value 4–8	Stiff N-Value 9–15	Very Stiff N-Value 16–30	Hard N-Value >30	Loose N-Value 4–10	Medium N-Value 11–30	Dense N-Value >30	Bar Size (#)	Quantity (ea.)	Bar Size (#)	Spacing (in.)
WIND ZONE 1	LIGHT	S26L3	26	25	2	11	270	19	13	10	8	17	14.5	12.5	8	12	4	12
		S30L3	30	25	2	11	300	19.5	13.5	10	8	17.5	15	13	8	14	4	12
		S35L3	35	25	3	11	320	20	13.5	10.5	8	17.5	15	13	8	14	4	12
	HEAVY	S30H3	30	29	3	16	450	24.5	16	12	9	21	17.5	15	8	16	4	6
		S35H3	35	29	4	16	515	26	17	12.5	9.5	22	18.5	16	8	16	4	6
WIND ZONE 2	LIGHT	S26L2	26	23	2	10	245	18	12.5	9.5	8	16.5	14	12	8	12	4	12
		S30L2	30	23	2	10	270	18.5	12.5	10	8	16.5	14	12.5	8	12	4	12
		S35L2	35	23	3	10	300	19.5	13	10	8	17	14.5	13	8	12	4	12
	HEAVY	S30H2	30	29	3	15	415	23	15.5	11.5	9	20	17	14.5	8	16	4	6
		S35H2	35	29	4	15	475	25	16.5	12	9.5	21	17.5	15.5	8	16	4	6
WIND ZONE 3	LIGHT	S26L2	26	23	2	10	245	18	12.5	9.5	8	16.5	14	12	8	12	4	12
		S30L2	30	23	2	10	270	18.5	12.5	10	8	16.5	14	12.5	8	12	4	12
		S35L2	35	23	3	10	300	19.5	13	10	8	17	14.5	13	8	12	4	12
	HEAVY	S30H2	30	29	3	15	415	23	15.5	11.5	9	20	17	14.5	8	16	4	6
		S35H2	35	29	4	15	475	25	16.5	12	9.5	21	17.5	15.5	8	16	4	6
WIND ZONE 4	LIGHT	S26L1	26	22	2	8	190	16	11.5	8.5	8	15	12.5	11	8	12	4	12
		S30L1	30	22	2	8	205	16.5	11.5	9	8	15	13	11.5	8	12	4	12
		S35L1	35	22	3	8	230	17	12	9	8	15.5	13.5	11.5	8	12	4	12
	HEAVY	S30H1	30	25	3	12	320	20.5	13.5	10.5	8	18	15	13.5	8	16	4	6
		S35H1	35	25	4	12	350	21	14	10.5	8.5	18.5	15.5	13.5	8	16	4	6
WIND ZONE 5	LIGHT	S26L2	26	23	2	10	245	18	12.5	9.5	8	16.5	14	12	8	12	4	12
		S30L2	30	23	2	10	270	18.5	12.5	10	8	16.5	14	12.5	8	12	4	12
		S35L2	35	23	3	10	300	19.5	13	10	8	17	14.5	13	8	12	4	12
	HEAVY	S30H2	30	29	3	15	415	23	15.5	11.5	9	20	17	14.5	8	16	4	6
		S35H2	35	29	4	15	475	25	16.5	12	9.5	21	17.5	15.5	8	16	4	6

48″ Dia. Foundations Concrete Volume (cubic yards) = (0.465) x Drilled Pier Length

General Notes:

1. Values shown in the "Reactions at the Pole Base" column represent the minimum acceptable capacity allowed for design using a design CSR of 1.00.
2. Use chairs and spacers to maintain proper clearance.
3. For foundation, always use air-entrain concrete mix.

Foundation Selection:

1. Perform a standard penetration test at each proposed foundation site to determine "N" value.
2. Select the appropriate wind zone from M 1 drawing.
3. Select the soil type (Clay or Sand) that best describes the soil characteristics.
4. Get the appropriate standard pole case number from the plans or from the Engineer.
5. Select the appropriate column under "Standard Foundations" based on soil type and "N" value. Select the appropriate row based on the pole load case.
6. The foundation depth is the value shown in the "Standard Foundations" category where the column and the row intersect.
7. Use Construction Procedures and Design Methods prescribed by FHWA-NHI-10-016 for Reference Drilled Shafts.

Standard Strain Pole Foundation–All Soil Condition

Prepared in the Offices of:
Transportation Mobility and Planning Division
Signal Design Section
750 N.Greenfield Pkwy.,Garner,NC 27529

SCALE: 0 NA NONE

Standard Strain Pole Foundation for All Soil Conditions

PLAN DATE:	OCTOBER 2017	DESIGNED BY:	C.B. COGDELL
PREPARED BY:	N. BITTING	REVIEWED BY:	D.C. SARKAR

REVISIONS	INIT.	DATE
Changed "Foundation Depth" to "Drilled Pier Length"in Conc. Eqn.	N.B.	7/12/2015

SEAL
NORTH CAROLINA PROFESSIONAL SEAL 028094 ENGINEER DEBESH C. SARKAR

DocuSigned by: Debesh C. Sarkar
SIGNATURE

10/11/2017
DATE

11-OCT-2017 08:40
S:\TS&SU\ITS Signals\Signal Design Section\Eastern Region\MW Sheets\2016\2014 Sig.M8 Std. Strain Pole Found.-Saturated Soil Condition.dgn
rtaylor

DocuSign Envelope ID: 8BEE47C3-CECA-4717-8B72-8C77D2788807

PROJECT REFERENCE NO.	SHEET NO.
U-5710A	SCP-1

1 INSTALL REA, PE – 22, SHIELDED, TWISTED PAIR COMMUNICATIONS CABLE

2 INSTALL REA, PE – 38, (FIGURE – 8) SHIELDED, TWISTED PAIR COMMUNICATIONS CABLE

3 INSTALL REA, PE – 39, (UNDERGROUND) SHIELDED, TWISTED PAIR COMMUNICATIONS CABLE

4 INSTALL SMFO CABLE

5 INSTALL MMFO CABLE

6 INSTALL FIBER OPTIC DROP CABLE ASSEMBLY

7 INSTALL TRACER WIRE

8 TRENCH

9 INSTALL PVC CONDUIT

10 INSTALL RIGID, GALVANIZED STEEL CONDUIT

11 INSTALL RIGID, GALVANIZED STEEL RISER WITH WEATHERHEAD

12 INSTALL RIGID, GALVANIZED STEEL RISER WITH FIBER OPTIC CABLE SEAL

13 INSTALL OUTER–DUCT POLYETHYLENE CONDUIT

14 INSTALL POLYETHYLENE CONDUIT

15 DIRECTIONAL DRILL CONDUIT

16 BORE AND JACK CONDUIT

17 INSTALL CABLE(S) IN EXISTING CONDUIT

18 INSTALL CABLE(S) IN NEW CONDUIT

19 INSTALL CABLE(S) IN EXISTING RISER

20 INSTALL CABLE(S) IN NEW RISER

21 INSTALL CABLE(S) IN EXISTING CONDUIT STUBOUTS

22 INSTALL NEW CONDUIT INTO EXISTING CABINET BASE (USE EXISTING CONDUIT STUB–OUTS WHEN AVAILABLE)

23 INSTALL NEW RISER INTO EXISTING CABINET BASE (USE EXISTING CONDUIT STUB–OUTS WHEN AVAILABLE)

24 INSTALL NEW CONDUIT INTO EXISTING POLE MOUNTED CABINET

25 INSTALL NEW RISER INTO EXISTING POLE MOUNTED CABINET

26 INSTALL FIBER–OPTIC VIDEO/DATA TRANCEIVER

27 INSTALL FIBER–OPTIC TRANCEIVER – DROP AND REPEAT

28 INSTALL INTERCONNECT CENTER, PATCH PANEL, JUMPERS, AND FUSION SPLICE CABLE IN CABINET

29 INSTALL UNDERGROUND SPLICE ENCLOSURE

30 MODIFY EXISTING SPLICE ENCLOSURE

31 INSTALL POLE MOUNTED SPLICE CABINET

32 INSTALL BASE MOUNTED SPLICE CABINET

33 REMOVE EXISTING SPLICE CABINET

34 INSTALL CABINET FOUNDATION

35 REMOVE EXISTING CABINET FOUNDATION

36 INSTALL CCTV CAMERA ASSEMBLY

37 INSTALL CCTV CAMERA WOOD POLE

38 INSTALL CCTV CAMERA METAL POLE AND FOUNDATION

39 INSTALL JUNCTION BOX

40 INSTALL OVERSIZED JUNCTION BOX

41 REMOVE EXISTING JUNCTION BOX

42 INSTALL WOOD POLE

43 REMOVE EXISTING WOOD POLE

44 INSTALL AERIAL GUY ASSEMBLY

45 INSTALL STANDARD GUY ASSEMBLY

46 INSTALL SIDEWALK GUY ASSEMBLY

47 INSTALL MESSENGER CABLE

48 REMOVE EXISTING COMMUNICATIONS CABLE AND MESSENGER CABLE

49 REMOVE EXISTING COMMUNICATIONS CABLE

50 INSTALL CELL MODEM

51 INSTALL CABLE STORAGE RACKS (SNOW SHOES) AND STORE 100 FEET OF CABLE

52 INSTALL DELINEATOR MARKER

53 STORE 30 FEET OF COMMUNICATIONS CABLE

54 LASH CABLE(S) TO EXISTING SIGNAL/COMMUNICATIONS CABLE

55 LASH CABLE(S) TO EXISTING MESSENGER CABLE

56 LASH CABLE(S) TO NEW MESSENGER CABLE

57 MODIFY EXISTING ELECTRICAL SERVICE

58 INSTALL NEW ELECTRICAL SERVICE

59 INSTALL NEW POLE MOUNTED CCTV CABINET

60 BOND TRACER WIRE TO EQUIPMENT GROUND BUS

LEGEND

- FO — FO — NEW FIBER OPTIC COMMUNICATIONS CABLE
- TWIST PR — NEW TWISTED PAIR COMMUNICATIONS CABLE
- EXI — EXISTING COMMUNICATIONS CABLE
- REM — EXISTING COMMUNICATIONS CABLE TO BE REMOVED
- NEW AERIAL GUY ASSEMBLY
- NEW CONDUIT
- EXISTING CONDUIT
- DD — DD — NEW DIRECTIONAL DRILLED CONDUIT
- B&J — B&J — NEW BORED AND JACKED CONDUIT
- NEW JUNCTION BOX
- EXISTING JUNCTION BOX
- NEW WOOD POLE
- EXISTING WOOD POLE
- S — NEW UNDERGROUND SPLICE ENCLOSURE
- NEW METAL POLE
- EXISTING METAL POLE
- NEW CCTV CAMERA ASSEMBLY
- EXISTING CCTV CAMERA ASSEMBLY
- NEW STANDARD GUY ASSEMBLY
- NEW STANDARD GUY USING EXISTING ANCHOR
- NEW SIDEWALK GUY ASSEMBLY
- NEW CABLE STORAGE RACKS (SNOW SHOES)
- EXISTING CONTROLLER AND CABINET
- S — EXISTING SPLICE CABINET
- S — NEW SPLICE CABINET
- SP — SIGNAL POLE
- XX–XXXX — SIGNAL INVENTORY NUMBER

CONSTRUCTION NOTE SYMBOLOGY KEY

- XX — INDICATES NUMBER OF CABLES, LOOPS, ETC.
- XX — INDICATES NUMBER OF FIBERS PER CABLE, TWISTED PAIRS PER CABLE, ETC.
- XX — INDICATES NUMBER OF RISER(S)/CONDUIT(S)
- XX — INDICATES DIAMETER OF RISER(S)/CONDUIT(S) (INCH)

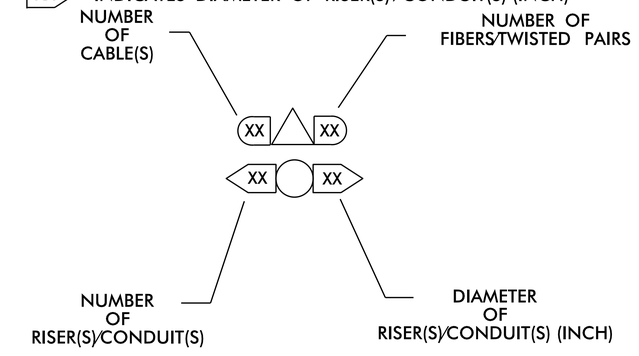

DOCUMENT NOT CONSIDERED FINAL UNLESS ALL SIGNATURES COMPLETED

Prepared For:

STATE OF NORTH CAROLINA — DEPARTMENT OF TRANSPORTATION — Transportation Mobility and Safety Division — Intelligent Transportation Systems

750 N. Greenfield Pkwy., Garner, NC 27529

Prepared in the offices of:

RAMEY KEMP & ASSOCIATES, INC.
Transportation Engineers
5808 Farmgdon Place, Suite 100
Raleigh, North Carolina 27609
919-872-5115 Tel, 919-878-6416 Fax.
www.rameykemp.com

SCALE 0

Construction Notes

Division 3 New Hanover County Wilmington

PLAN DATE:	November 2019	REVIEWED BY:	WJ Hamilton
PREPARED BY:	A. Andrews	RKA PROJ NO:	19258 (041)

REVISIONS	INIT.	DATE

SEAL
NORTH CAROLINA PROFESSIONAL SEAL 32396 ENGINEER WILLIAM J. HAMILTON

Docusigned by: William J. Hamilton — A0660D7046454B4...

11/25/19
SIGNATURE DATE

DocuSign Envelope ID: 8BEE47C3-CECA-4717-8B72-8C77D2788807

PROJECT REFERENCE NO.	SHEET NO.
U-5710A	SCP-2

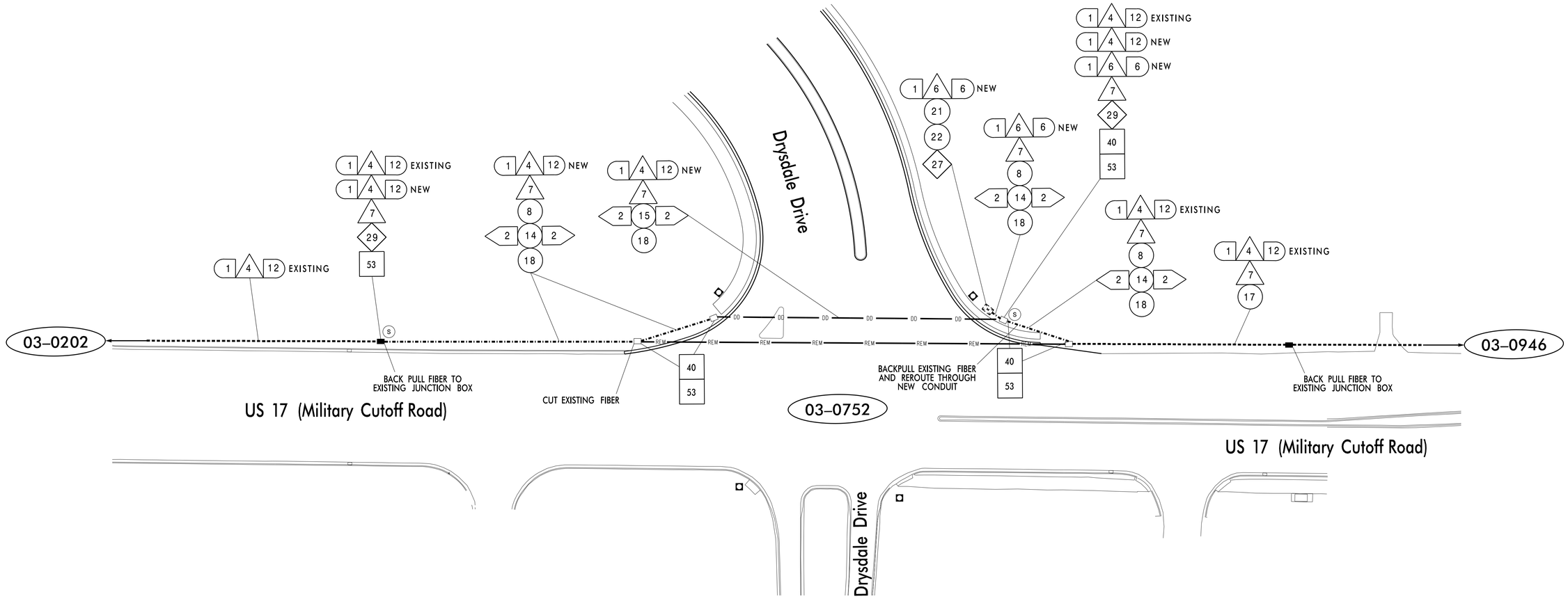

NOTES:

1) NOTIFY THE CITY OF WILMINGTON SIGNAL SYSTEMS ENGINEER, DENYS VIELKANOWITZ, AT 910-341-4676 FIVE (5) DAYS PRIOR TO BEGINNING WORK ON SIGNAL SYSTEM COMMUNICATIONS CABLE. NOTIFY THE CITY OF WILMINGTON SIGNAL SYSTEMS ENGINEER AFTER ALL WORK IS PERFORMED TO ENSURE THAT ALL FIBER CIRCUITS ARE FUNCTIONING PROPERLY. ALL WORK IS NOT COMPLETE UNTIL THE SIGNAL SYSTEM IS BACK UP AND OPERATIONAL.

2) RESTORE COMMUNICATIONS WITHIN 24 HOURS IF THE FIBER OPTIC CABLE IS CUT OR NOT COMMUNICATING PROPERLY DURING CONSTRUCTION.

3) CONTRACTOR TO RECORD EXISTING SPLICE ARRANGEMENT FOR COMPARISON TO THE SUPPLIED SPLICE DETAILS. IF DISCREPANCIES EXIST, CONTACT THE ENGINEER TO DETERMINE HOW TO PROCEED WITH RESPLICING. PROVIDE AS-BUILT PLANS TO THE ENGINEER IF FINAL SPLICE ARRANGEMENT DIFFERS FROM THE SUPPLIED SPLICE DETAILS.

4) CONTRACTOR SHALL ENSURE THAT SYSTEM DOWN TIME IS MINIMIZED DURING SPLICING OF NEW FIBER.

5) ALL JUNCTION BOX LIDS TO READ "NCDOT FIBER OPTIC CABLE"

Prepared in the offices of:
RAMEY KEMP & ASSOCIATES, INC.
Transportation Engineers
5808 Farlington Place, Suite 100
Raleigh, North Carolina 27609
919-872-5115 Tel. 919-878-5416 Fax.
www.rameykemp.com

Prepared for:
Transportation Mobility and Safety Division
STATE OF NORTH CAROLINA
DEPARTMENT OF TRANSPORTATION
Intelligent Transportation Systems Section
750 N. Greenfield Pkwy., Garner, NC 27529

SCALE
0 40
1"=40'

Drysdale Drive at US 17
(Military Cutoff Road)
Cable Routing Plan

Division 3 New Hanover County Wilmington

PLAN DATE: November 2019		REVIEWED BY: WJ Hamilton	
PREPARED BY: A. Andrews		RKA PROJ. No.: 19258 (041)	
REVISIONS		INIT.	DATE

DOCUMENT NOT CONSIDERED FINAL UNLESS ALL SIGNATURES COMPLETED

SEAL
NORTH CAROLINA PROFESSIONAL SEAL 32396 ENGINEER WILLIAM J. HAMILTON

DocuSigned by:
William J. Hamilton
A0560D7D4648484
SIGNATURE
11/25/19
DATE

DocuSign Envelope ID: 8BEE47C3-CECA-4717-8B72-8C77D2788807

PROJECT REFERENCE NO.	SHEET NO.
U-5710A	SCP-3

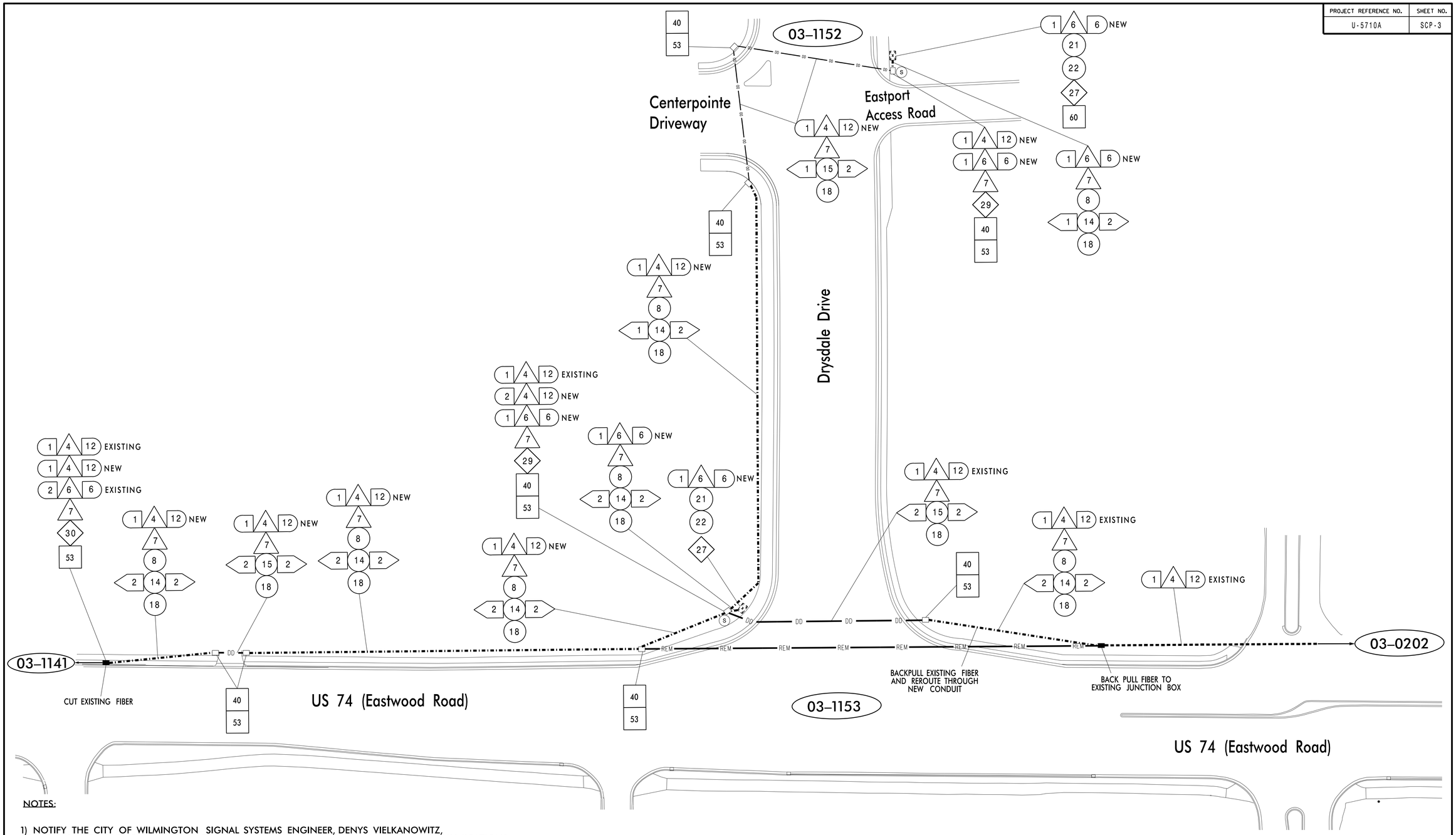

NOTES:

1) NOTIFY THE CITY OF WILMINGTON SIGNAL SYSTEMS ENGINEER, DENYS VIELKANOWITZ, AT 910–341–4676 FIVE (5) DAYS PRIOR TO BEGINNING WORK ON SIGNAL SYSTEM COMMUNICATIONS CABLE. NOTIFY THE CITY OF WILMINGTON SIGNAL SYSTEMS ENGINEER AFTER ALL WORK IS PERFORMED TO ENSURE THAT ALL FIBER CIRCUITS ARE FUNCTIONING PROPERLY. ALL WORK IS NOT COMPLETE UNTIL THE SIGNAL SYSTEM IS BACK UP AND OPERATIONAL.

2) RESTORE COMMUNICATIONS WITHIN 24 HOURS IF THE FIBER OPTIC CABLE IS CUT OR NOT COMMUNICATING PROPERLY DURING CONSTRUCTION.

3) CONTRACTOR TO RECORD EXISTING SPLICE ARRANGEMENT FOR COMPARISON TO THE SUPPLIED SPLICE DETAILS. IF DISCREPANCIES EXIST, CONTACT THE ENGINEER TO DETERMINE HOW TO PROCEED WITH RESPLICING. PROVIDE AS–BUILT PLANS TO THE ENGINEER IF FINAL SPLICE ARRANGEMENT DIFFERS FROM THE SUPPLIED SPLICE DETAILS.

4) CONTRACTOR SHALL ENSURE THAT SYSTEM DOWN TIME IS MINIMIZED DURING SPLICING OF NEW FIBER.

5) ALL JUNCTION BOX LIDS TO READ "NCDOT FIBER OPTIC CABLE"

DOCUMENT NOT CONSIDERED FINAL UNLESS ALL SIGNATURES COMPLETED

SEAL
NORTH CAROLINA PROFESSIONAL SEAL 32396 ENGINEER WILLIAM J HAMILTON

DocuSigned by: William J. Hamilton
A0560D7D56E84B4...
SIGNATURE 11/25/19 DATE

Prepared for: NCDOT Transportation Mobility and Safety Division, Traffic Engineering Branch, Traffic Signal Section

250 N. Greenfield Pkwy., Garner, NC 27529

Prepared in the offices of:
RAMEY KEMP & ASSOCIATES, INC.
Transportation Engineers
5808 Faringdon Place, Suite 100
Raleigh, North Carolina 27609
919-872-5115 Tel. 919-878-8416 Fax.
www.rameykemp.com

SCALE 0 40 1"=40'

Drysdale Drive
Cable Routing Plan

Division 3 New Hanover County Wilmington

PLAN DATE: November 2019 REVIEWED BY: WJ Hamilton

PREPARED BY: A. Andrews RKA PROJ. No.: 19258 (041)

REVISIONS	INIT.	DATE

DocuSign Envelope ID: 8BEE47C3-CECA-4717-8B72-8C77D2788807

PROJECT REFERENCE NO.	SHEET NO.
U-5710A	SCP-4

US 74 (EASTWOOD ROAD)
AT
DRYSDALE DRIVE
SIG. INV. # 03–1153

Notes:
Unused fibers left coiled and stored in splice tray/enclosure.
Unused Buffer Tubes left coiled and stored in splice tray/enclosure.

LEGEND
X = FUSION SPLICE

COLOR CODE
TIA/EIA 598–A
(1) BLUE
(2) ORANGE
(3) GREEN
(4) BROWN
(5) SLATE
(6) WHITE

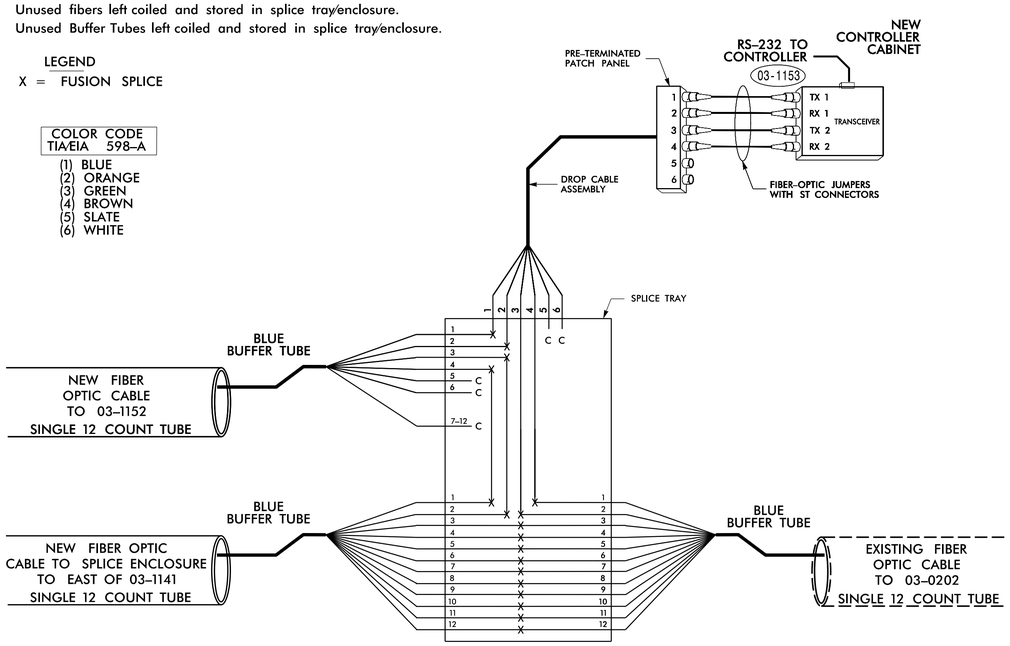

DRYSDALE DRIVE
AT
CENTERPOINTE DRIVEWAY/
EASTPORT ACCESS ROAD
SIG. INV. # 03–1152

Notes:
Unused fibers left coiled and stored in splice tray/enclosure.
Unused Buffer Tubes left coiled and stored in splice tray/enclosure.

LEGEND
X = FUSION SPLICE

COLOR CODE
TIA/EIA 598–A
(1) BLUE
(2) ORANGE
(3) GREEN
(4) BROWN
(5) SLATE
(6) WHITE

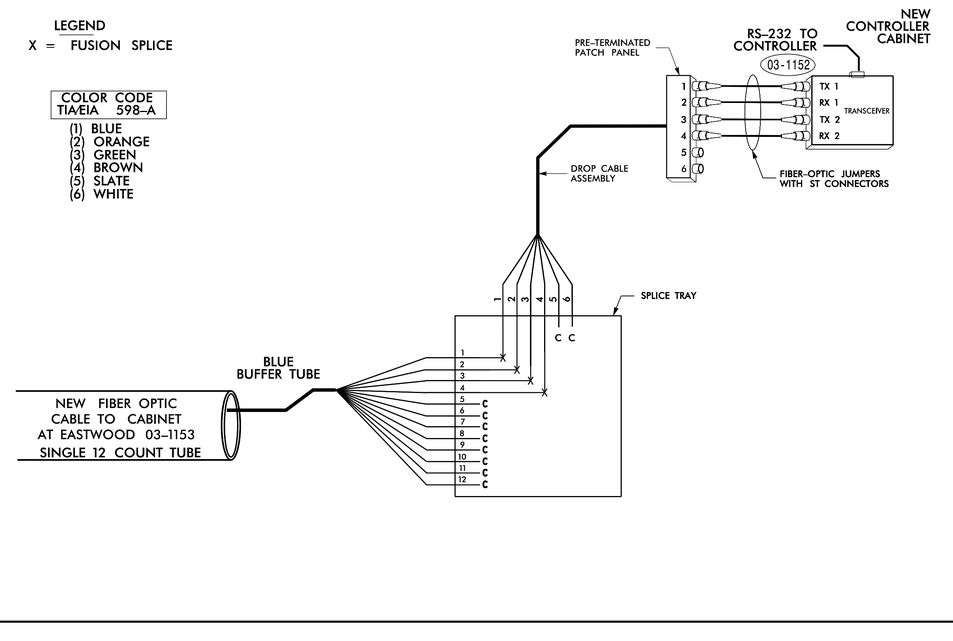

NOTES:

1) NOTIFY THE CITY OF WILMINGTON SIGNAL SYSTEMS ENGINEER, DENYS VIELKANOWITZ, AT 910-341-4676 FIVE (5) DAYS PRIOR TO BEGINNING WORK ON SIGNAL SYSTEM COMMUNICATIONS CABLE. NOTIFY THE CITY OF WILMINGTON SIGNAL SYSTEMS ENGINEER AFTER ALL WORK IS PERFORMED TO ENSURE THAT ALL FIBER CIRCUITS ARE FUNCTIONING PROPERLY. ALL WORK IS NOT COMPLETE UNTIL THE SIGNAL SYSTEM IS BACK UP AND OPERATIONAL.

2) CONTRACTOR TO RECORD EXISTING SPLICE ARRANGEMENT FOR COMPARISON TO THE SUPPLIED SPLICE DETAILS. IF DISCREPANCIES EXIST, CONTACT THE ENGINEER TO DETERMINE HOW TO PROCEED WITH RESPLICING. PROVIDE AS-BUILT PLANS TO THE ENGINEER IF FINAL SPLICE ARRANGEMENT DIFFERS FROM THE SUPPLIED SPLICE DETAILS.

3) INCLUDE ON THE COVER OF EACH SPLICE TRAY THE FOLLOWING:
REFERENCE SECTION 1731 "FIBER OPTIC SPLICE ENCLOSURE"
1) SPLICE LOCATION
2) DATE
3) COMPANY NAME
4) NAME OF INDIVIDUAL PERFORMING THE SPLICING

PRIOR TO INSTALLING THE COVER ON THE SPLICE TRAY TAKE A DIGITAL PHOTOGRAPH SHOWING THE SPLICE TRAY AND INFORMATION SHOWN ABOVE (1-4) AND SUBMIT PHOTOGRAPH ALONG WITH OTDR TEST RESULTS.

4) CONTRACTOR SHALL ENSURE THAT SYSTEM DOWN TIME IS MINIMIZED DURING SPLICING OF NEW FIBER.

Prepared in the offices of:
RAMEY KEMP & ASSOCIATES, INC.
Transportation Engineers
5808 Farringdon Place, Suite 100
Raleigh, North Carolina 27609
919-872-5115 Tel. 919-878-5416 Fax.
www.rameykemp.com

Prepared for:
Transportation Mobility and Safety Division
Intelligent Transportation Systems Section
NORTH CAROLINA DEPARTMENT OF TRANSPORTATION
750 N. Greenfield Pkwy., Garner, NC 27529

Splice Details

Division 3 New Hanover County Wilmington

PLAN DATE: November 2019	REVIEWED BY: WJ Hamilton
PREPARED BY: A. Andrews	RKA PROJ. No.: 19258 (041)

SCALE
0
N/A

REVISIONS	INIT.	DATE

DOCUMENT NOT CONSIDERED FINAL UNLESS ALL SIGNATURES COMPLETED

SEAL
NORTH CAROLINA PROFESSIONAL SEAL 32396 ENGINEER WILLIAM J. HAMILTON

Docusigned by:
William J. Hamilton
SIGNATURE
11/25/19
DATE

DocuSign Envelope ID: 8BEE47C3-CECA-4717-8B72-8C77D2788807

PROJECT REFERENCE NO.	SHEET NO.
U-5710A	SCP-5

NEW SPLICE ENCLOSURE
SOUTH OF 03–0752 (US 17 MILITARY
CUTOFF AT DRYSDALE DRIVE

Notes:
Unused fibers left coiled and stored in splice tray/enclosure.
Unused Buffer Tubes left coiled and stored in splice tray/enclosure.

LEGEND
X = FUSION SPLICE

COLOR CODE
TIA/EIA 598–A
(1) BLUE
(2) ORANGE
(3) GREEN
(4) BROWN
(5) SLATE
(6) WHITE

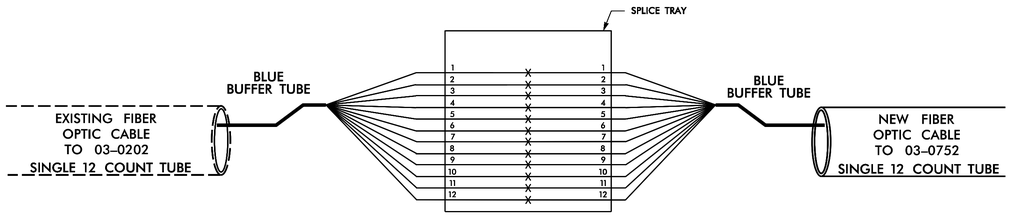

US 17 (MILITARY CUTOFF ROAD)
AT
DRYSDALE DRIVE
SIG. INV. # 03–0752

Notes:
Unused fibers left coiled and stored in splice tray/enclosure.
Unused Buffer Tubes left coiled and stored in splice tray/enclosure.

LEGEND
X = FUSION SPLICE

COLOR CODE
TIA/EIA 598–A
(1) BLUE
(2) ORANGE
(3) GREEN
(4) BROWN
(5) SLATE
(6) WHITE

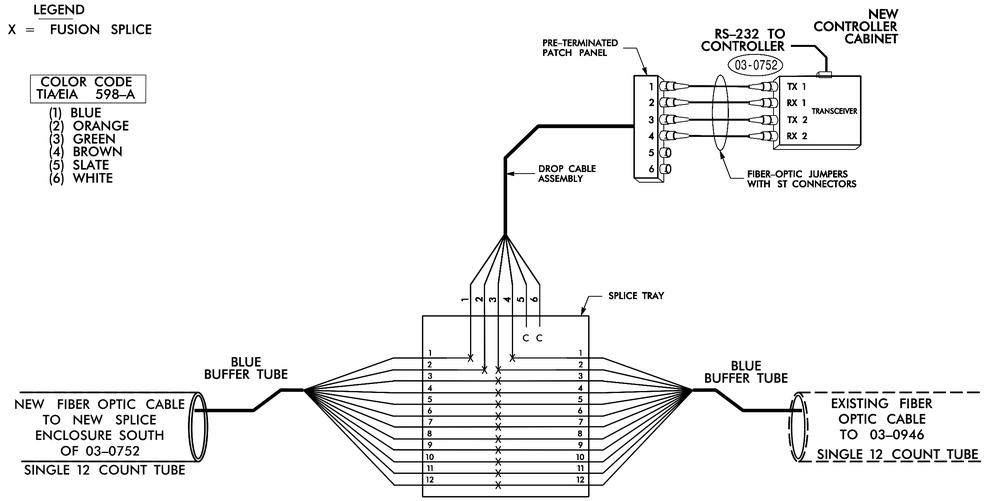

NOTES:

1) NOTIFY THE CITY OF WILMINGTON SIGNAL SYSTEMS ENGINEER, DENYS VIELKANOWITZ, AT 910-341-4676 FIVE (5) DAYS PRIOR TO BEGINNING WORK ON SIGNAL SYSTEM COMMUNICATIONS CABLE. NOTIFY THE CITY OF WILMINGTON SIGNAL SYSTEMS ENGINEER AFTER ALL WORK IS PERFORMED TO ENSURE THAT ALL FIBER CIRCUITS ARE FUNCTIONING PROPERLY. ALL WORK IS NOT COMPLETE UNTIL THE SIGNAL SYSTEM IS BACK UP AND OPERATIONAL.

2) CONTRACTOR TO RECORD EXISTING SPLICE ARRANGEMENT FOR COMPARISON TO THE SUPPLIED SPLICE DETAILS. IF DISCREPANCIES EXIST, CONTACT THE ENGINEER TO DETERMINE HOW TO PROCEED WITH RESPLICING. PROVIDE AS-BUILT PLANS TO THE ENGINEER IF FINAL SPLICE ARRANGEMENT DIFFERS FROM THE SUPPLIED SPLICE DETAILS.

3) INCLUDE ON THE COVER OF EACH SPLICE TRAY THE FOLLOWING:
REFERENCE SECTION 1731 "FIBER OPTIC SPLICE ENCLOSURE"
1) SPLICE LOCATION
2) DATE
3) COMPANY NAME
4) NAME OF INDIVIDUAL PERFORMING THE SPLICING

PRIOR TO INSTALLING THE COVER ON THE SPLICE TRAY TAKE A DIGITAL PHOTOGRAPH SHOWING THE SPLICE TRAY AND INFORMATION SHOWN ABOVE (1-4) AND SUBMIT PHOTOGRAPH ALONG WITH OTDR TEST RESULTS.

4) CONTRACTOR SHALL ENSURE THAT SYSTEM DOWN TIME IS MINIMIZED DURING SPLICING OF NEW FIBER.

Prepared in the offices of:
RAMEY KEMP & ASSOCIATES, INC.
Transportation Engineers
5808 Farringdon Place, Suite 100
Raleigh, North Carolina 27609
919-872-5115 Tel. 919-878-5416 Fax.
www.rameykemp.com

Prepared for: NC Department of Transportation, Transportation Mobility and Safety Division, Intelligent Transportation Systems Section
750 N. Greenfield Pkwy., Garner, NC 27529

Splice Details

Division 3 New Hanover County Wilmington

PLAN DATE: November 2019	REVIEWED BY: WJ Hamilton
PREPARED BY: A. Andrews	RKA PROJ. No.: 19258 (041)

SCALE: 0 N/A

REVISIONS	INIT.	DATE

DOCUMENT NOT CONSIDERED FINAL UNLESS ALL SIGNATURES COMPLETED

SEAL
NORTH CAROLINA PROFESSIONAL SEAL 32396 ENGINEER WILLIAM J. HAMILTON
DocuSigned by: William J. Hamilton
ACKNOWLEDGMENT OF SIGNATURE
11/25/19
DATE

DocuSign Envelope ID: 8BEE47C3-CECA-4717-8B72-8C77D2788807

PROJECT REFERENCE NO.	SHEET NO.
U-5710A	SCP-6

MODIFIED SPLICE ENCLOSURE
EAST OF 03-1141 (US 74 AT
CAVALIER DRIVE)

Notes:
Unused fibers left coiled and stored in splice tray/enclosure.
Unused Buffer Tubes left coiled and stored in splice tray/enclosure.

LEGEND
C = CAP AND SEAL
X = FUSION SPLICE

COLOR CODE
TIA/EIA 598-A

(1) BLUE	(7) RED
(2) ORANGE	(8) BLACK
(3) GREEN	(9) YELLOW
(4) BROWN	(10) VIOLET
(5) SLATE	(11) ROSE
(6) WHITE	(12) AQUA

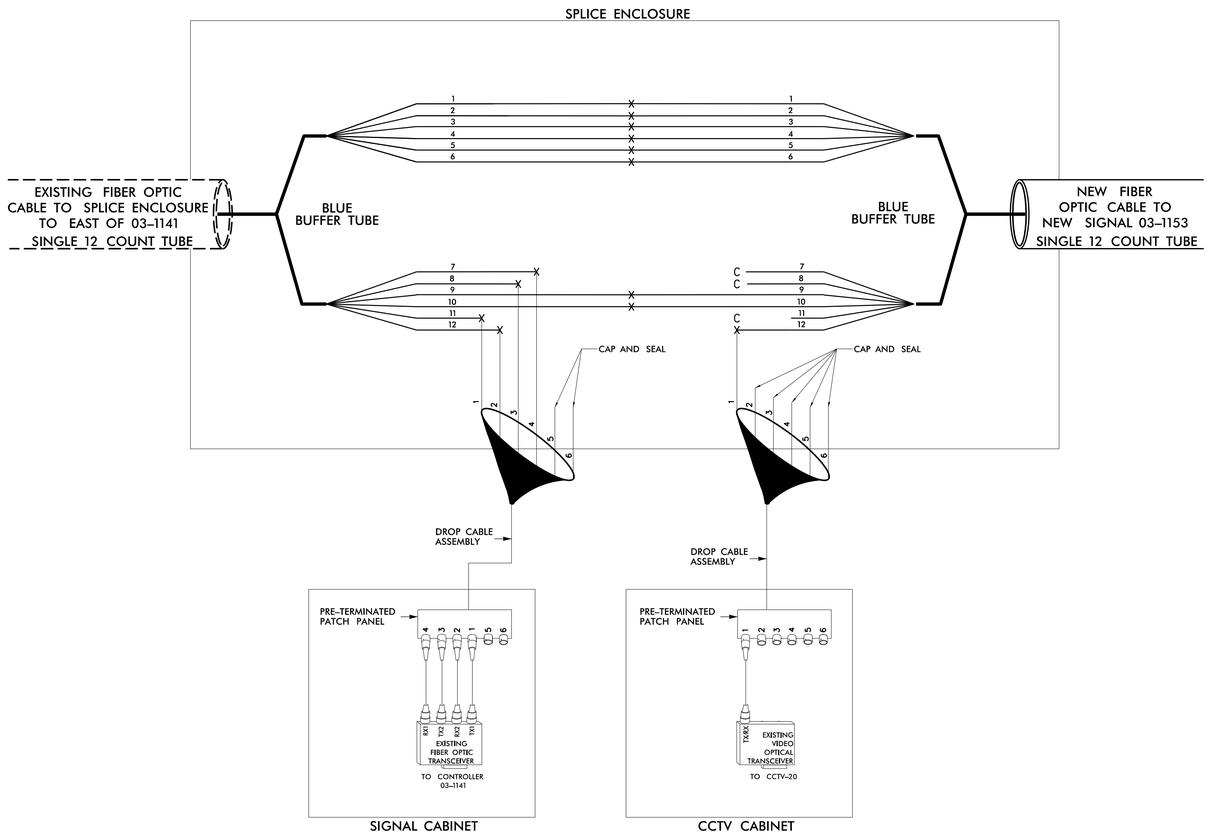

NOTES:

1) NOTIFY THE CITY OF WILMINGTON SIGNAL SYSTEMS ENGINEER, DENYS VIELKANOWITZ, AT 910-341-4676 FIVE (5) DAYS PRIOR TO BEGINNING WORK ON SIGNAL SYSTEM COMMUNICATIONS CABLE. NOTIFY THE CITY OF WILMINGTON SIGNAL SYSTEMS ENGINEER AFTER ALL WORK IS PERFORMED TO ENSURE THAT ALL FIBER CIRCUITS ARE FUNCTIONING PROPERLY. ALL WORK IS NOT COMPLETE UNTIL THE SIGNAL SYSTEM IS BACK UP AND OPERATIONAL.

2) CONTRACTOR TO RECORD EXISTING SPLICE ARRANGEMENT FOR COMPARISON TO THE SUPPLIED SPLICE DETAILS. IF DISCREPANCIES EXIST, CONTACT THE ENGINEER TO DETERMINE HOW TO PROCEED WITH RESPLICING. PROVIDE AS-BUILT PLANS TO THE ENGINEER IF FINAL SPLICE ARRANGEMENT DIFFERS FROM THE SUPPLIED SPLICE DETAILS.

3) INCLUDE ON THE COVER OF EACH SPLICE TRAY THE FOLLOWING:
REFERENCE SECTION 1731 "FIBER OPTIC SPLICE ENCLOSURE"
1) SPLICE LOCATION
2) DATE
3) COMPANY NAME
4) NAME OF INDIVIDUAL PERFORMING THE SPLICING

PRIOR TO INSTALLING THE COVER ON THE SPLICE TRAY TAKE A DIGITAL PHOTOGRAPH SHOWING THE SPLICE TRAY AND INFORMATION SHOWN ABOVE (1-4) AND SUBMIT PHOTOGRAPH ALONG WITH OTDR TEST RESULTS.

4) CONTRACTOR SHALL ENSURE THAT SYSTEM DOWN TIME IS MINIMIZED DURING SPLICING OF NEW FIBER.

DOCUMENT NOT CONSIDERED FINAL UNLESS ALL SIGNATURES COMPLETED

Prepared in the offices of:
RAMEY KEMP & ASSOCIATES, INC.
Transportation Engineers
5808 Faringdon Place, Suite 100
Raleigh, North Carolina 27609
919-872-5115 Tel. 919-878-5416 Fax.
www.rameykemp.com

Prepared for:
Transportation Mobility and Safety Division
STATE OF NORTH CAROLINA DEPARTMENT OF TRANSPORTATION
Intelligent Transportation Systems Section
750 N. Greenfield Pkwy., Garner, NC 27529

SCALE
0
N/A

Splice Details

Division 3 New Hanover County Wilmington

PLAN DATE: November 2019	REVIEWED BY: WJ Hamilton
PREPARED BY: A. Andrews	RKA PROJ. No.: 19258 (041)

REVISIONS	INIT.	DATE

SEAL
NORTH CAROLINA PROFESSIONAL SEAL 32396 ENGINEER WILLIAM J. HAMILTON
DocuSigned by:
William J. Hamilton
A0560D7256484B4...
SIGNATURE
11/25/19
DATE

09/08/99

$$$$USERNAME$$$$
$$$$SYSTIME$$$$
$$$$DGN$$$$

TIP PROJECT: U-5710A

See Sheet 1B For Conventional Symbols

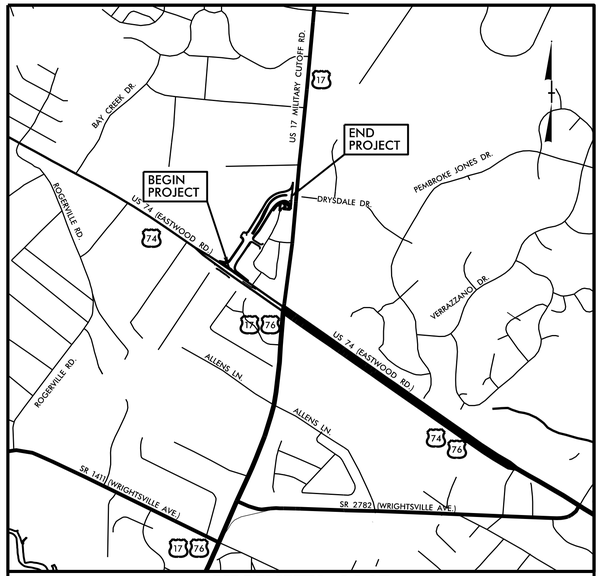

VICINITY MAP
(NOT TO SCALE)

STATE OF NORTH CAROLINA
DIVISION OF HIGHWAYS

T.I.P. NO.	SHEET NO.
U-5710A	UO-1

NOTE:
ALL UTILITY WORK SHOWN ON THIS SHEET WILL BE DONE BY OTHERS. NO PAYMENT WILL BE MADE TO THE CONTRACTOR FOR UTILITY WORK SHOWN ON THIS SHEET.

UTILITIES BY OTHERS PLANS
NEW HANOVER COUNTY

LOCATION: NEW LOCATION NORTHWESTERN QUADRANT CONNECTION BETWEEN US 74 (EASTWOOD RD.) AND US 17 (MILITARY CUTOFF RD.)

TYPE OF WORK: POWER (DISTRIBUTION) GAS (DISTRIBUTION) AND COMMUNICATIONS

NAD 83/NA 2011

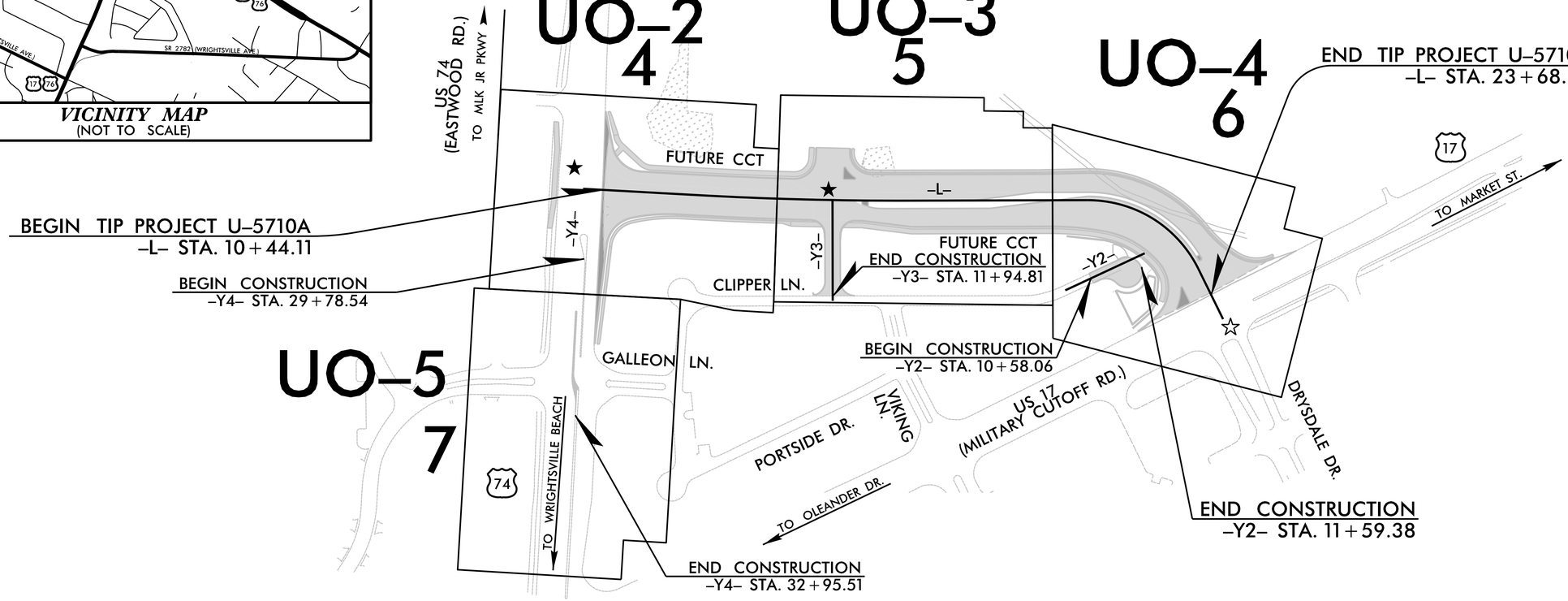

GRAPHIC SCALES

50 25 0 50 100
PLANS

50 25 0 50 100
PROFILE (HORIZONTAL)

10 5 0 10 20
PROFILE (VERTICAL)

INDEX OF SHEETS

SHEET NO.:	*DESCRIPTION:*
UO-1	*TITLE SHEET*
UO-2 THRU UO-5	*UBO PLAN SHEETS*

UTILITY OWNERS WITH CONFLICTS

(A) POWER (DISTRIBUTION) - DUKE
(B) GAS (DISTRIBUTION) - PNG
(C) COMMUNICATIONS - AT&T
(D) COMMUNICATIONS - CENTURYLINK
(E) COMMUNICATIONS - SEGRA
(F) COMMUNICATIONS - SPECTRUM

PREPARED IN THE OFFICE OF:

SO-DEEP | SAM NC™

SO-DEEP | SAM NC, Inc.
A SAM COMPANY
2800-154 Sumner Boulevard, Raleigh, NC 27616 Tel 919-878-7466

Keith Garry	*UTILITY PROJECT MANAGER*
Scott Williford	*PROJECT UTILITY COORDINATOR*

DIVISION OF HIGHWAYS
DIVISION 03

DIV ADDRESS
5501 Barbados Blvd.
Castle Hayne, NC 28429

Brian Harding	*DIVISION CONTACT #1*
Lonny Sleeper	*DIVISION CONTACT #2*

PROJECT REFERENCE NO.	SHEET NO.
U-5710A	UO-2
THIS SHEET CORRESPONDS TO RDY- 4	

UTILITIES BY OTHERS

ALL PROPOSED UTILITY WORK SHOWN ON THIS SHEET WILL BE DONE BY OTHERS. NO PAYMENT WILL BE MADE TO THE CONTRACTOR FOR PROPOSED UTILITY WORK SHOWN ON THIS SHEET.

5/14/99

BEGIN CONSTRUCTION
BEGIN TIP PROJECT U-5710A
-L- STA. 10+44.11
(SEE TIP PROJECT U-5710)

-L- PC Sta. 12+38.92

NAD 83/NA 2011

MATCHLINE -L- STA. 14+00, SEE SHEET UO-3

-L- POT Sta. 10+04.90 =
-Y4- POT Sta. 28+36.54

ABANDONED

SPECTRUM
CENTURYLINK
SEGRA
SPECTRUM

AT&T TO REMAIN

SPECTRUM TO ADJUST COAX IF IN CONFLICT

ABANDONED

PNG TIE TO EXIST.

ABANDONED

REM

SEGRA

ABANDONED

★ PROPOSED SIGNAL
SEE SHEET 8 FOR -L- PROFILE

MATCHLINE -Y4- STA. 30+50, SEE SHEET UO-5

PROJECT REFERENCE NO.	SHEET NO.
U-5710A	UO-3
THIS SHEET CORRESPONDS TO RDY- 5	

UTILITIES BY OTHERS

ALL PROPOSED UTILITY WORK SHOWN ON THIS SHEET WILL BE DONE BY OTHERS. NO PAYMENT WILL BE MADE TO THE CONTRACTOR FOR PROPOSED UTILITY WORK SHOWN ON THIS SHEET.

5/14/99

MATCHLINE –L– STA. 14+00, SEE SHEET UO-2

MATCHLINE –L– STA. 19+60, SEE SHEET UO-4

NAD 83/NA 2011

–L– POC Sta. 15+12.47 =
–Y3– POT Sta. 10+00.00

–L– PT Sta. 16+70.71

–Y3– POT Sta. 12+04.82

THOMAS G. WETHERILL

WETHERILL FAMILY LAND LLC

WOODS

–L– +57.00
125.00' LT

–L– +60.00
114.00' LT &
96.00' LT

–L– +65.00
125.00' LT

–L– +72.00
113.00' LT &
95.00' LT &
90.00' LT

–L– +70.71
85.00' LT

–L– +70.71
65.00' LT

–L– +95.00
65.00' LT
BEG. C/A
BEG. FENCE

–L– +50.00
80.00' LT

–L– +40.00
145.00' LT

–L– +15.00
95.00' LT
82.00' LT
65.00' LT

–L– +25.00
72.00' LT

–L– +25.00
58.00' LT
END C/A
END FENCE

2' BASE TAIL DITCH
SEE DETAIL 'A'

0508 CLASS 'B' RIP RAP
EST. 8 TONS
21 SY GEO-TEXTILE

0501 15" RCP-IV FUTURE

0502 15" RCP-IV FUTURE

0503 CB(F)

0504 CB(G)

0505 CB(F)

0506 CB(G)

0507 CB(G)

0509 CB(F)

0510 CB(G)

0511 CB(G)

15" RCP-IV

30" RCP-IV

24" RCP-IV VAR.

SPECTRUM
CENTURYLINK
SEGRA
SPECTRUM

PROP U/G COMMUN CONDUIT

1'-6" C&G

2'-6" C&G

230' STORAGE

–L– +84.26
ON P/L
END C/A

–L– +03.00
ON P/L

END 5' SIDEWALK
BEGIN PROP. CCT
STA. 14+29.09

–L– +43.68
ON P/L
BEGIN C/A

–L– +00.00
ON P/L

MARY ANCIL FISHER

ELOISE N. ELLER

EUGENE R. STRADER, JR

DIANE M. WALSTON, ETAL

JESSE G. BRINKLEY, JR
& BETTY P.

BETTY M. JACKSON,
REV LIV TR

RONALD M. KRUEGER,
LIVING TRUST

–L– +22.31
77.04' RT

–L– +81.56
73.95' RT

–L– +81.59
76.27' RT

–L– +61.77
79.50' RT

END CONSTRUCTION
–Y3– STA. 11+94.81

ANDREW J. BAKER

MELANIE B. ABBOTT

STEPHANIE HUDGENS
& S. ARGUTO WILLIAMS

–Y3– +82.00
ON P/L

–Y3– +81.94
55.00' RT

–Y3– +03.00
55.00' RT

–Y3– +81.94
60.00' LT

–Y3– +03.00
60.00' LT

–Y3– +82.00
ON P/L

68" BLK WALL

80" BLK WALL

4" GAS

CLIPPER LN 18' BST

★ PROPOSED SIGNAL
SEE SHEET 5A FOR DRAINAGE DITCH DETAIL
SEE SHEET 8 FOR –L– PROFILE
SEE SHEET 10 FOR –Y3– PROFILE

PROJECT REFERENCE NO.	SHEET NO.
U-5710A	UO-4
THIS SHEET CORRESPONDS TO RDY- 6	

UTILITIES BY OTHERS

ALL PROPOSED UTILITY WORK SHOWN ON THIS SHEET WILL BE DONE BY OTHERS. NO PAYMENT WILL BE MADE TO THE CONTRACTOR FOR PROPOSED UTILITY WORK SHOWN ON THIS SHEET.

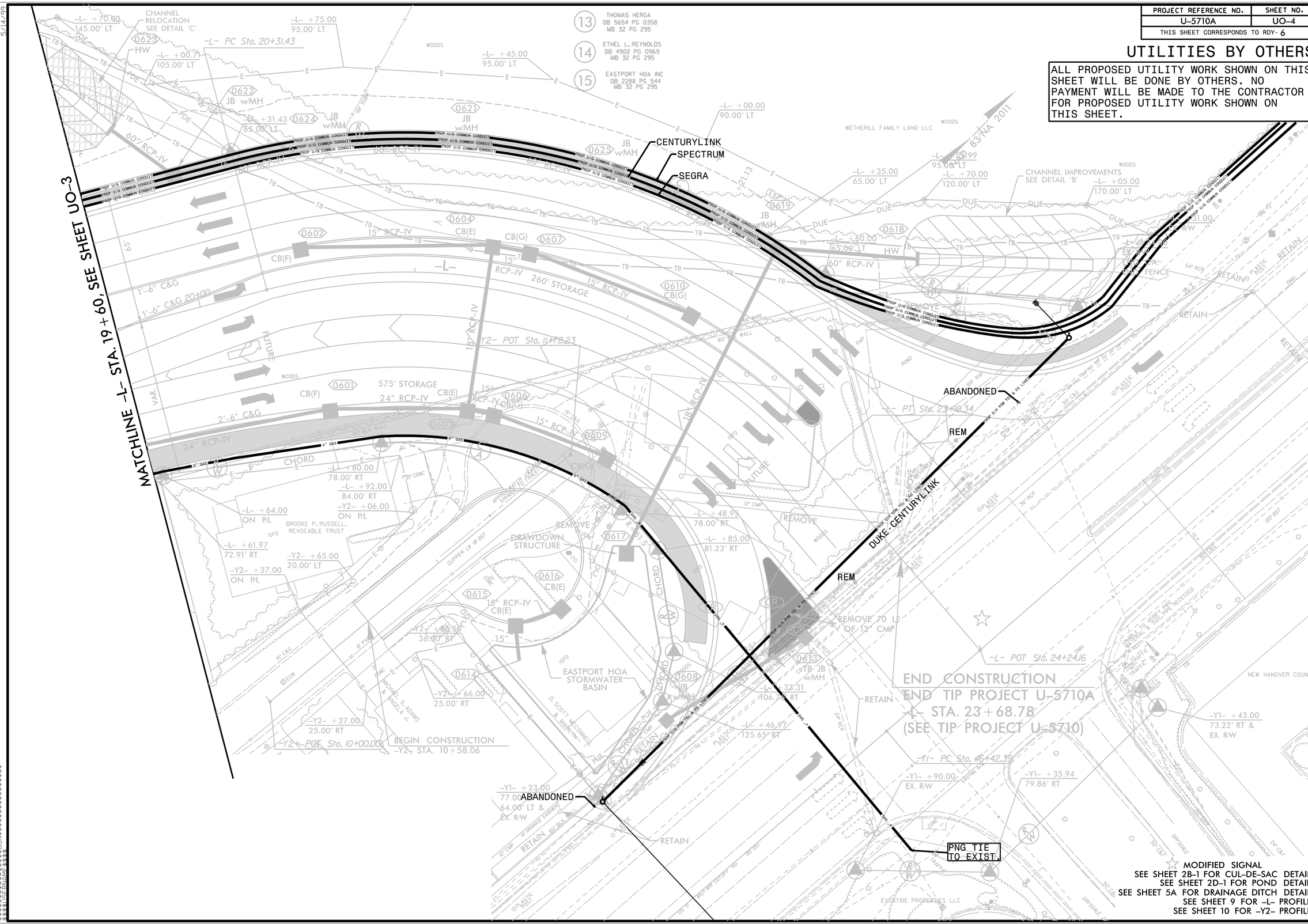

MODIFIED SIGNAL
SEE SHEET 2B-1 FOR CUL-DE-SAC DETAIL
SEE SHEET 2D-1 FOR POND DETAIL
SEE SHEET 5A FOR DRAINAGE DITCH DETAIL
SEE SHEET 9 FOR -L- PROFILE
SEE SHEET 10 FOR -Y2- PROFILE

5/14/99

PROJECT REFERENCE NO.	SHEET NO.
U-5710A	UO-5
THIS SHEET CORRESPONDS TO RDY- 7	

UTILITIES BY OTHERS

ALL PROPOSED UTILITY WORK SHOWN ON THIS SHEET WILL BE DONE BY OTHERS. NO PAYMENT WILL BE MADE TO THE CONTRACTOR FOR PROPOSED UTILITY WORK SHOWN ON THIS SHEET.

MATCHLINE –Y4– STA. 30+50, SEE SHEET UO-2

NAD 83/NA 2011

LMA A. HODGES

VIRGINIA CAROLE FOY ISFD

MICHAEL B DAVIS ISFD

TAMELA B. STRICKLAND ISFD

GORDON DELORES KEIFER, REV TR ISFD

SADIE SPENCE PRICE ISFD

NICHOLAS A. JOSE

GALLEON LN 16' BST

FUTURE ROW

80' BLK WALL

EXISTING R/W

RETAIN

CB(F) 0702

TB, JB w/MH 0701

4' CONC. ISLAND

REMOVE EXIST. CONC. ISLAND FROM –Y4– STA. 30+85 TO 32+96

RETAIN EXIST. ISLAND FROM –Y4– STA. 32+96 TO 36+70

–Y5– POT Sta. 20+90.15 = –Y4– POT Sta. 32+50.67

–Y4–

END CONSTRUCTION CB –Y4– STA. 32+95.51

–Y5– PT Sta. 18+98.54

US 74 EASTWOOD RD VAR BST

US 74 CROSS CITY TRAIL VAR BST

EASTWOOD ROAD US 74 60' BST

35+00

20+00

PROP U/G COMMUN CONDUIT

SEGRA TIE TO EXIST. HH

LEEWARD VILLAGE HOA INC

EASTWOOD COMMONS OFFICE ASSN

COMMONWEALTH DR VAR BST

POND

WOODS

PLASTIC BOLLARD

10' X 70' SIGHT EASEMENT

20' DRAINAGE & UTILITY EASEMENT

PIPE DIRECTION

6" HDPE DIRECTION

42" RCP

36" RCP

30" RCP

24" RCP

18" RCP

15" RCP

24" CMP

30" CMP

8" PVC

10" PVC

8" STEEL

15" C&G 163 LT

20.5' CONC

56" CONC

30" C&G

24" C&G

78" CONC

30" BLK WALL

RIP RAP

CONC ISL

CONC

DMH

CB

DI

EMD

BST

LT

RT

STATE OF NORTH CAROLINA
DIVISION OF HIGHWAYS

CROSS-SECTION SUMMARY

PROJ. REFERENCE NO.	SHEET NO.
U-5710A	X-0

Quantities are approximate only. The Resident Engineer will recross-section the work accurately when the project is staked out. These cross-section notes will be used in computing the final quantities for which the contractor will be paid.

NOTE: EMBANKMENT COLUMN INCLUDES BACKFILL FOR UNDERCUT

Station L	Uncl. Exc. (cu. yd.)	Embt (cu. yd.)	UnderCut (cu. yd.)
11+00.00	0	0	0
11+50.00	331	34	0
12+00.00	397	15	0
12+50.00	394	28	0
13+00.00	385	34	0
13+50.00	389	9	0
14+00.00	337	0	0
14+50.00	202	5	0
15+00.00	92	33	0
15+50.00	34	175	0
16+00.00	1	471	0
16+50.00	0	562	0
17+00.00	0	467	0
17+50.00	1	403	0
18+00.00	8	241	0
18+50.00	34	127	0
19+00.00	69	121	0
19+50.00	55	197	0
20+00.00	19	338	0
20+50.00	11	631	37
21+00.00	27	743	143
21+50.00	56	622	214
22+00.00	79	548	173
22+50.00	131	396	0
23+00.00	143	428	0
23+50.00	128	333	0

Station Y2	Uncl. Exc. (cu. yd.)	Embt (cu. yd.)
10+58.06	0	0
10+75.00	4	0
11+00.00	20	1
11+25.00	55	3
11+50.00	48	6
11+59.38	8	3

Station Y3	Uncl. Exc. (cu. yd.)	Embt (cu. yd.)
10+50.00	0	0
11+00.00	105	7
11+50.00	132	1
11+75.00	74	0

Station Y4	Uncl. Exc. (cu. yd.)	Embt (cu. yd.)
30+00.00	0	0
30+50.00	48	0
31+00.00	35	0
31+50.00	22	0

0 5 10	PROJ. REFERENCE NO.	SHEET NO.
	U-5710A	X-1

150 140 130 120 110 100 90 80 70 60 50 40 30 20 10 0 10 20 30 40 50 60 70 80 90 100 110 120 130 140 150

30 20 10

EXIST. PRIVACY FENCE

4:1 | 22.14 | 0.025 | 0.025 | 22.14 | 4:1

23.68

12+50.00

EXIST. PRIVACY FENCE

4:1 | 21.83 | 0.025 | 0.025 | 21.83 | 4:1

23.99

12+00.00

EXIST. PRIVACY FENCE

4:1 | 21.65 | 0.025 | 0.025 | 21.57 | 4:1

23.29

11+50.00

EXIST. PRIVACY FENCE

4:1 | 21.64 | 0.025 | 0.000 | 22.80 | 4:1

23.11

11+00.00

23.43

10+50.00

23.66

10+00.00

-L-

8/23/99

PLOT DRIVER: NCDOT_pdf_color_eng_50.plt
USER: CHARRIS
FILE: North_Carolina_Dept_of_Transportation\2014_16_Planning _Design_LSA\U_5710_T0_4_c\06.00_Project_Engineering_and_Design\U-5710A\Roadway\XSC\U5710A_RDY_XPL_L.dgn

PENTABLE: xpl_en_v8_conventional.tbl
DATE: 11/26/2019
TIME: 5:22:11 PM

0 5 10	PROJ. REFERENCE NO.	SHEET NO.
	U-5710A	X-2

150 140 130 120 110 100 90 80 70 60 50 40 30 20 10 0 10 20 30 40 50 60 70 80 90 100 110 120 130 140 150

30 20 10

EXIST. PRIVACY FENCE

-Y3-

0.025 0.025

22.95

15+00.00

30 20

EXIST. PRIVACY FENCE

4:1 23.31 0.025 0.025 23.40 4:1

23.48

14+50.00

30 20

EXIST. PRIVACY FENCE

4:1 23.09 0.025 0.025 23.09 4:1

23.89

14+00.00

30 20

EXIST. PRIVACY FENCE

4:1 22.77 0.025 0.025 22.77 4:1

24.32

13+50.00

30 20

EXIST. PRIVACY FENCE

4:1 22.46 0.025 0.025 22.46 4:1

24.26

13+00.00

-L-

150 140 130 120 110 100 90 80 70 60 50 40 30 20 10 0 10 20 30 40 50 60 70 80 90 100 110 120 130 140 150

8/23/99

PLOT DRIVER: NCDOT_pdf_color_eng_50.plt | PENTABLE: xpl_eh_v8_conventional.tbl
USER: CHARRIS | DATE: 11/26/2019 | TIME: 5:22:12 PM
FILE: North_Carolina_Dept_of_Transportation\2014_16_Planning _Design_LSA\U_5710_TO_4_C\06.00_Project_Engineering_and_Design\U-5710A\Roadway\XSC\U5710A_ROY_XPL_L.dgn

0 5 10	PROJ. REFERENCE NO.	SHEET NO.
	U-5710A	X-3

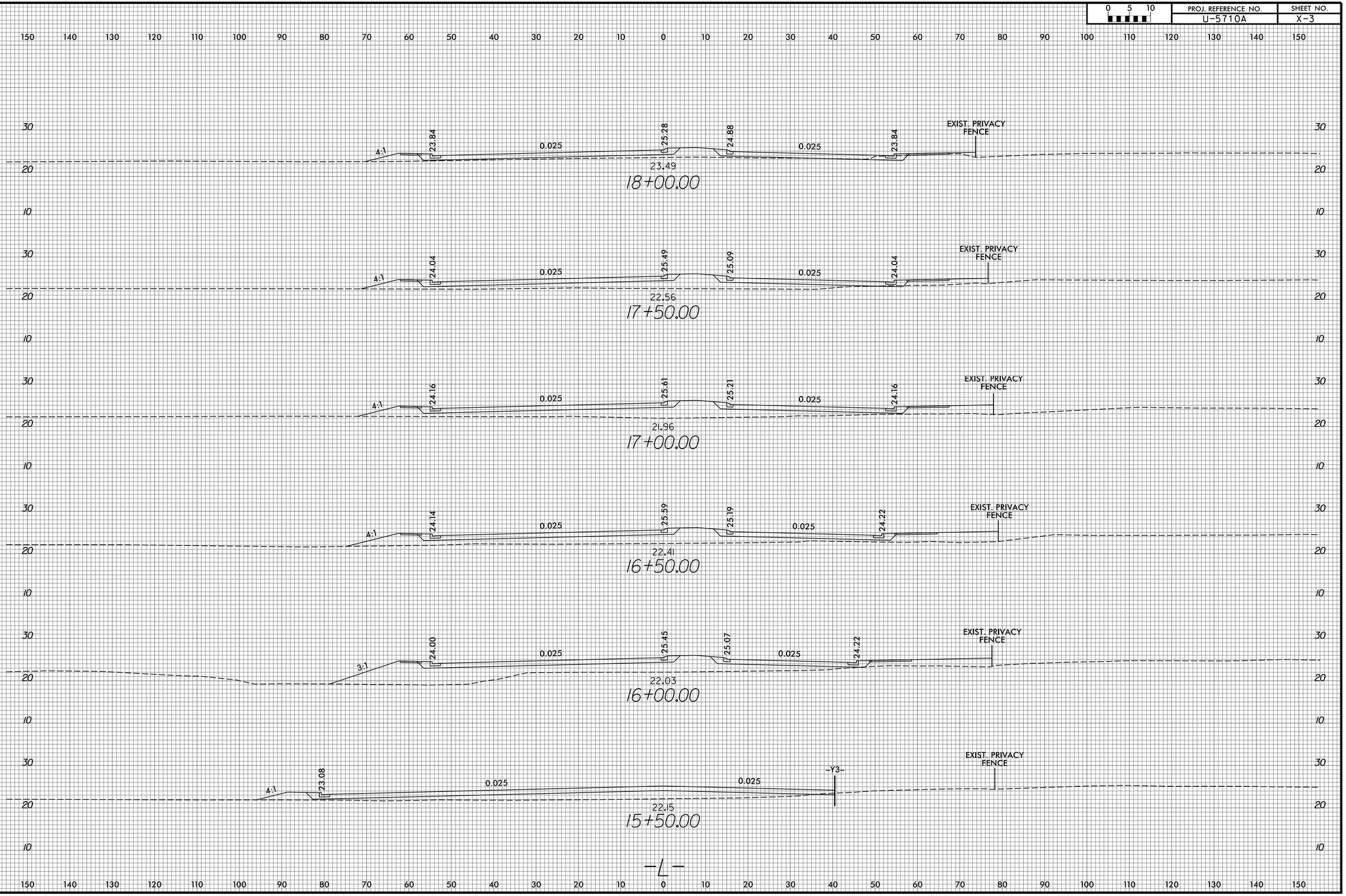

PLOT DRIVER: NCDOT_pdf_color_eng_50.plt
USER: CHARRIS
FILE: North_Carolina_Dept_of_Transportation\2014_16_Planning _Design_LSA\U-5710_T0.4_c\06.00_Project_Engineering_and_Design\U-5710A\Roadway\XSC\U5710A_ROY_XPL_L.dgn
PENTABLE: xpl_eh_v8_conventional.tbl
DATE: 11/26/2019
TIME: 5:22:13 PM

8/23/99

0 5 10	PROJ. REFERENCE NO.	SHEET NO.
	U-5710A	X-4

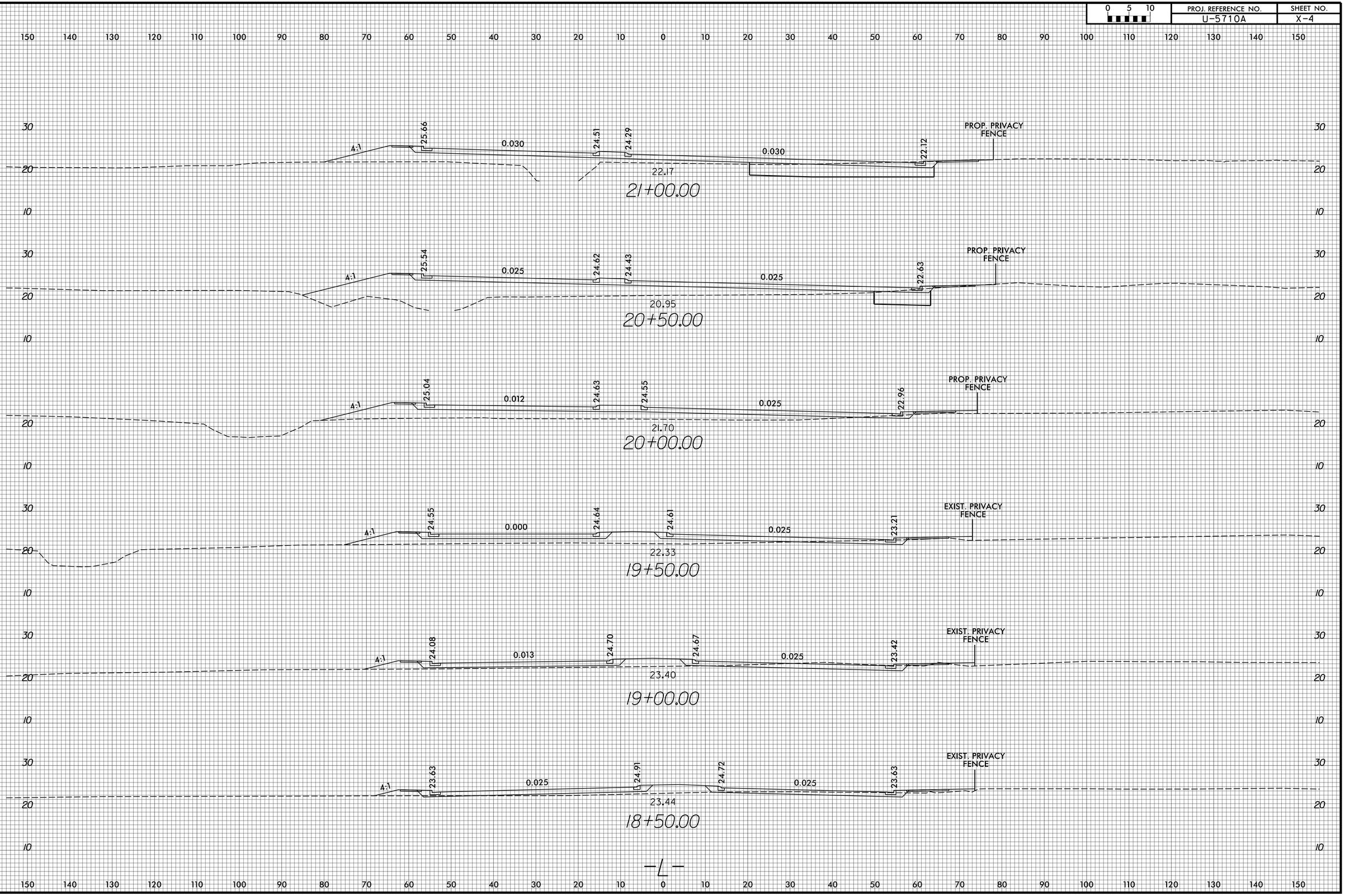

8/23/99
PLOT DRIVER: NCDOT_pdf_color_eng_50.plt
USER: CHARRIS
FILE: North_Carolina_Dept_of_Transportation\2014_16_Planning_Design_LSA\U-5710_T0.4_c\06.00_Project_Engineering_and_Design\U-5710A\Roadway\XSC\U5710A_RDY_XPL_L.dgn
PENTABLE: xpl_eh_v8_conventional.tbl
DATE: 11/26/2019
TIME: 5:22:14 PM

0 5 10	PROJ. REFERENCE NO.	SHEET NO.
	U-5710A	X-5

150 140 130 120 110 100 90 80 70 60 50 40 30 20 10 0 10 20 30 40 50 60 70 80 90 100 110 120 130 140 150

30 / 20 / 10

4:1 | 25.22 | 0.005 | 23.44 | 0.005 | 24.16 | PROP. PRIVACY FENCE

23+50.00

4:1 | 24.90 | 0.005 | 24.21 | 0.005 | 24.22 | PROP. PRIVACY FENCE

23+00.00

4:1 | 25.19 | 0.016 | 24.64 | 24.52 | 24.15 | 0.016 | 23.36 | PROP. PRIVACY FENCE

22+50.00

4:1 | 25.76 | 0.030 | 24.62 | 24.39 | 22.92 | 0.030 | 22.22 | PROP. PRIVACY FENCE

22+00.00

4:1 | 25.62 | 0.030 | 24.48 | 24.26 | 22.41 | 0.030 | 22.08 | PROP. PRIVACY FENCE

21+50.00

-L-

150 140 130 120 110 100 90 80 70 60 50 40 30 20 10 0 10 20 30 40 50 60 70 80 90 100 110 120 130 140 150

8/23/99

PLOT DRIVER: NCDOT.pdf.color_eng_50.plt | PENTABLE: xpl_en_v8_conventional.tbl
USER: CHARRIS | DATE: 11/26/2019 | TIME: 5:22:14 PM
FILE: North_Carolina_Dept_of_Transportation\2014_16_Planning _Design_LSA\U_5710_T0_4_c\06_00_Project_Engineering_and_Design\U-5710A\Roadway\XSC\U5710A_ROY_XPL_L.dgn

0 5 10	PROJ. REFERENCE NO.	SHEET NO.
	U-5710A	X-6

150 140 130 120 110 100 90 80 70 60 50 40 30 20 10 0 10 20 30 40 50 60 70 80 90 100 110 120 130 140 150

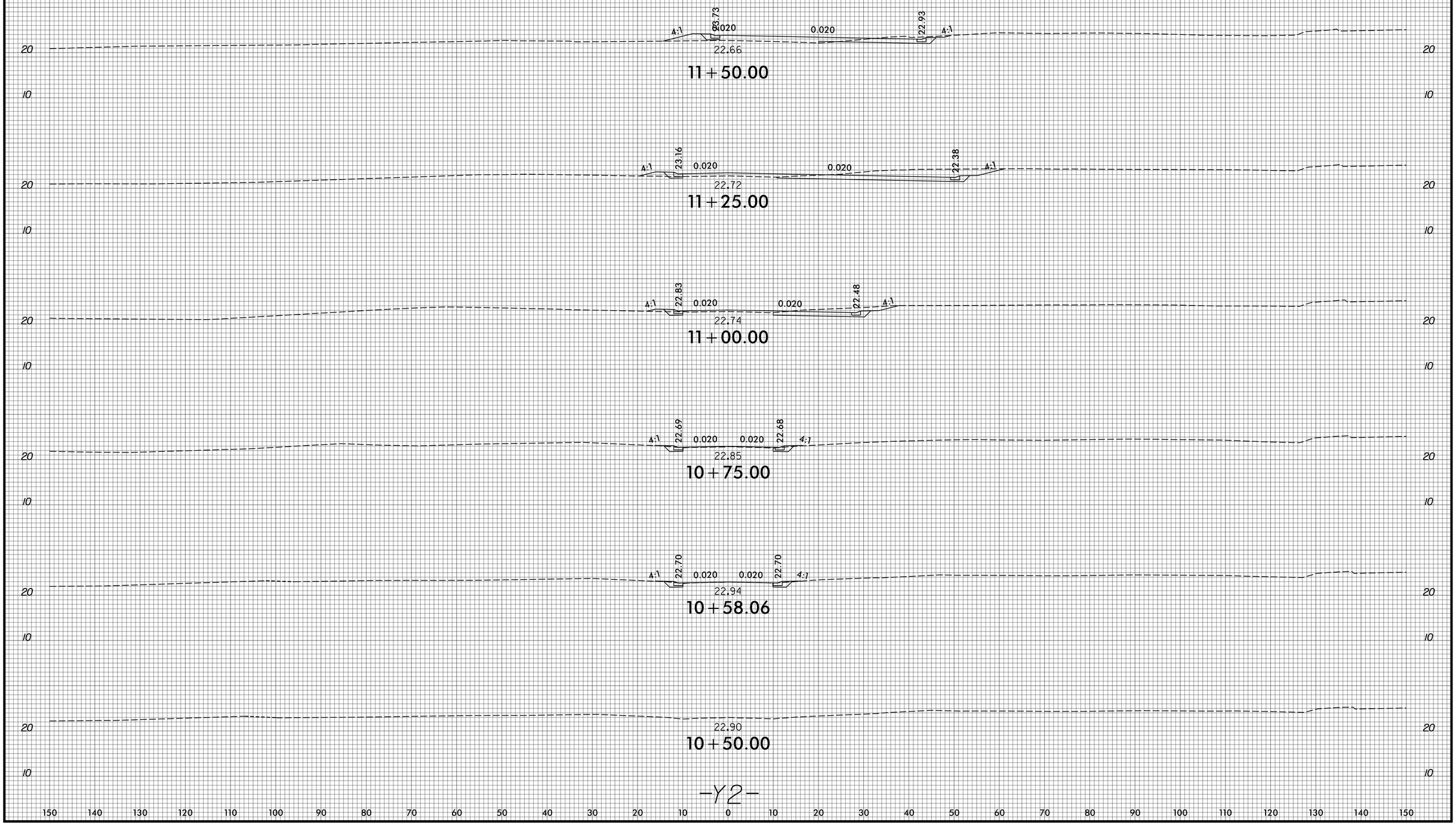

-Y2-

150 140 130 120 110 100 90 80 70 60 50 40 30 20 10 0 10 20 30 40 50 60 70 80 90 100 110 120 130 140 150

8/23/99

PLOT DRIVER: NCDOT_pdf_color_eng_50.plt | PENTABLE: xpl_en_v8_conventional.tbl
USER: CHARRIS | DATE: 11/26/2019 | TIME: 5:22:25 PM
FILE: North_Carolina_Dept_of_Transportation\2014_16_Planning _Design_LSA\U-5710_T0.4_c\06.00_Project_Engineering_and_Design\U-5710A\Roadway\XSC\U5710A_ROY_XPL_Y2.dgn

0 5 10	PROJ. REFERENCE NO.	SHEET NO.
	U-5710A	X-7

150 140 130 120 110 100 90 80 70 60 50 40 30 20 10 0 10 20 30 40 50 60 70 80 90 100 110 120 130 140 150

30
20

4:1 | 24.03 | 0.012 | 0.012 | 23.61 | 4:1
24.43

11+75.00

30
20

4:1 | 24.37 | 0.020 | 0.020 | 23.77 | 4:1
24.97

11+50.00

30
20

4:1 | 24.74 | 0.020 | 0.020 | 24.14 | 4:1
24.86

11+00.00

30
20

4:1 | 24.18 | 0.005 | 0.005 | 23.95 | 4:1
23.83

10+50.00

10

-Y3-

150 140 130 120 110 100 90 80 70 60 50 40 30 20 10 0 10 20 30 40 50 60 70 80 90 100 110 120 130 140 150

8/23/99

PLOT DRIVER: NCDOT_pdf_color_eng_50.plt | PENTABLE: xpl_eh_v8_conventional.tbl
USER: CHARRIS | DATE: 11/26/2019 | TIME: 5:22:39 PM
FILE: North_Carolina_Dept_of_Transportation\2014_16_Planning _Design_LSA\U_5710_T0_4_c\06.00_Project_Engineering_and_Design\U-5710A\Roadway\XSC\U5710A_ROY_XPL_Y3.dgn

PROJ. REFERENCE NO.	SHEET NO.
U-5710A	X-8

0 5 10

150 140 130 120 110 100 90 80 70 60 50 40 30 20 10 0 10 20 30 40 50 60 70 80 90 100 110 120 130 140 150

20

32+00.00

30

20

4:1 23.97

31+50.00

20

4:1 23.65 0.021

31+00.00

20

4:1 23.39 0.018

30+50.00

20

4:1 23.04 0.025

30+00.00

20

29+50.00

20

-Y4-

150 140 130 120 110 100 90 80 70 60 50 40 30 20 10 0 10 20 30 40 50 60 70 80 90 100 110 120 130 140 150

8/23/99

PLOT DRIVER: NCDOT_pdf_color_eng_50.plt
USER: CHARRIS
FILE: North_Carolina_Dept_of_Transportation\2014_16_Planning _Design_LSA\U_5710_T0_4_c\06_00_Project_Engineering_and_Design\U-5710A\Roadway\XSC\U5710A_RDY_XPL_Y4.dgn

PENTABLE: NCDOT_pshpfl_conventional.tbl
DATE: 12/4/2019
TIME: 5:23:56 PM

GEOTECHNICAL ENGINEER

NORTH CAROLINA PROFESSIONAL SEAL 030943 ENGINEER THEIN TUN ZAN

DocuSigned by: Thein Tun Zan 11/27/2019
A43688C08C19472...
SIGNATURE DATE

ENGINEER

SIGNATURE DATE

DOCUMENT NOT CONSIDERED FINAL UNLESS ALL SIGNATURES COMPLETED

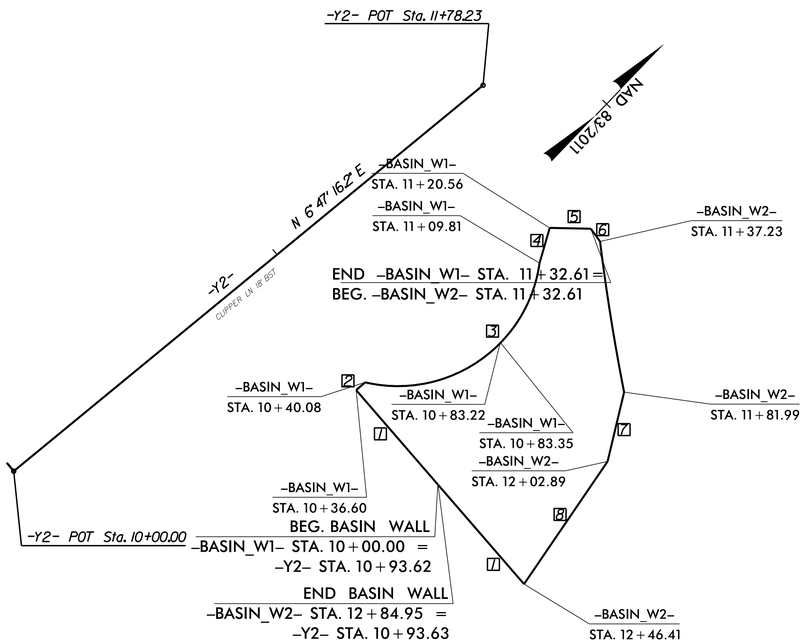

-BASIN_W1-

PI Sta 10+63.77	PI Sta 10+97.05
△ = 58° 50' 57.4" (LT)	△ = 36° 35' 21.8" (LT)
D = 136° 25' 07.9"	D = 138° 17' 23.0"
L = 43.14'	L = 26.46'
T = 23.69'	T = 13.70'
R = 42.00'	R = 41.43'

-BASIN_W2-

PI Sta 11+59.62
△ = 4° 05' 07.5" (LT)
D = 9° 07' 37.1"
L = 44.76'
T = 22.39'
R = 627.76'

1	N 84° 39' 54.4" W
2	N 5° 20' 06.0" E
3	N 0° 35' 05.5" E
4	N 27° 38' 43.3" W
5	N 47° 23' 02.6" E
6	S 79° 49' 28.1" E
7	S 30° 22' 20.3" E
8	S 9° 31' 03.4" E

BASIN RETAINING WALL NO. 1 & WALL NO. 2 PLAN VIEW

NOT TO SCALE

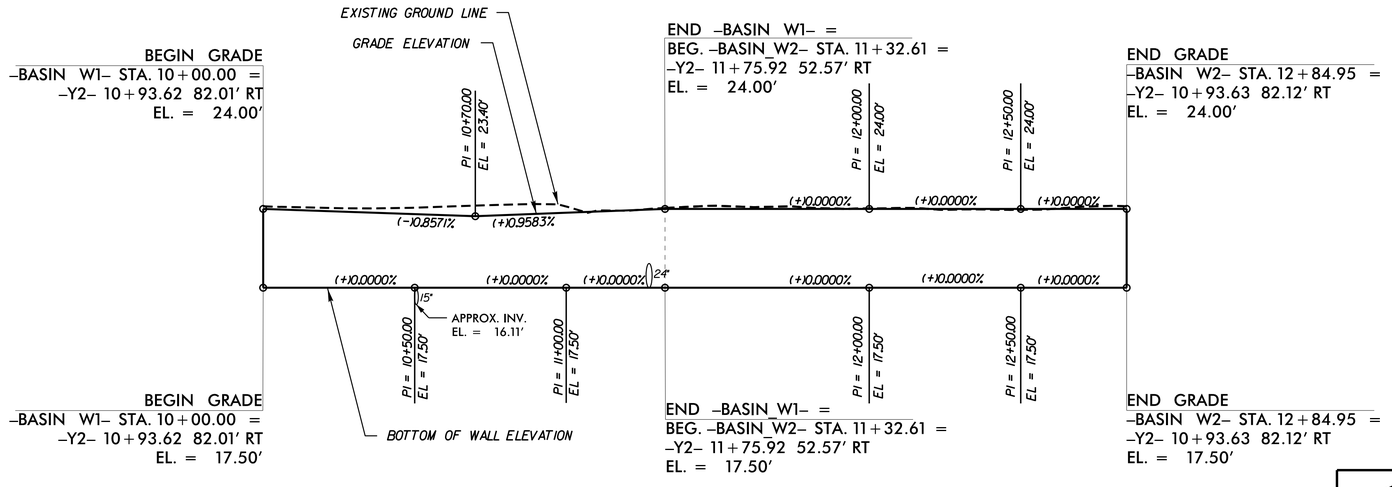

RETAINING WALL NO. 1 & WALL NO. 2 WALL ENVELOPES

NOT TO SCALE

ESTIMATED MSE WALL QUANTITIES
(SQUARE FEET)

MSE RETAINING WALL NO. 1	1,155 SF
MSE RETAINING WALL NO. 2	1,375 SF

PROJECT NO.: U-5710A
NEW HANOVER COUNTY
STATION: 10+00 -W1- & 11+32.61 -W2-
SHEET 1 OF 3

PREPARED BY: THEIN TUN ZAN	DATE: 11-2019
REVIEWED BY: JAMES BATTS	DATE: 11-2019

NORTH CAROLINA DEPARTMENT OF TRANSPORTATION DIVISION OF HIGHWAYS

GEOTECHNICAL ENGINEERING UNIT

MSE RETAINING WALLS NO. 1 & 2 FOR BASIN PLAN & WALL ENVELOPES

REVISIONS

NO.	BY	DATE	NO.	BY	DATE
1			3		
2			4		

SHEET NO. W-1

GEOTECHNICAL ENGINEER

NORTH CAROLINA PROFESSIONAL SEAL 030943 ENGINEER THEIN TUN ZAN

DocuSigned by: Thein Tun Zan 11/27/2019
A43688C08C19472...
SIGNATURE DATE

ENGINEER

SIGNATURE DATE

DOCUMENT NOT CONSIDERED FINAL UNLESS ALL SIGNATURES COMPLETED

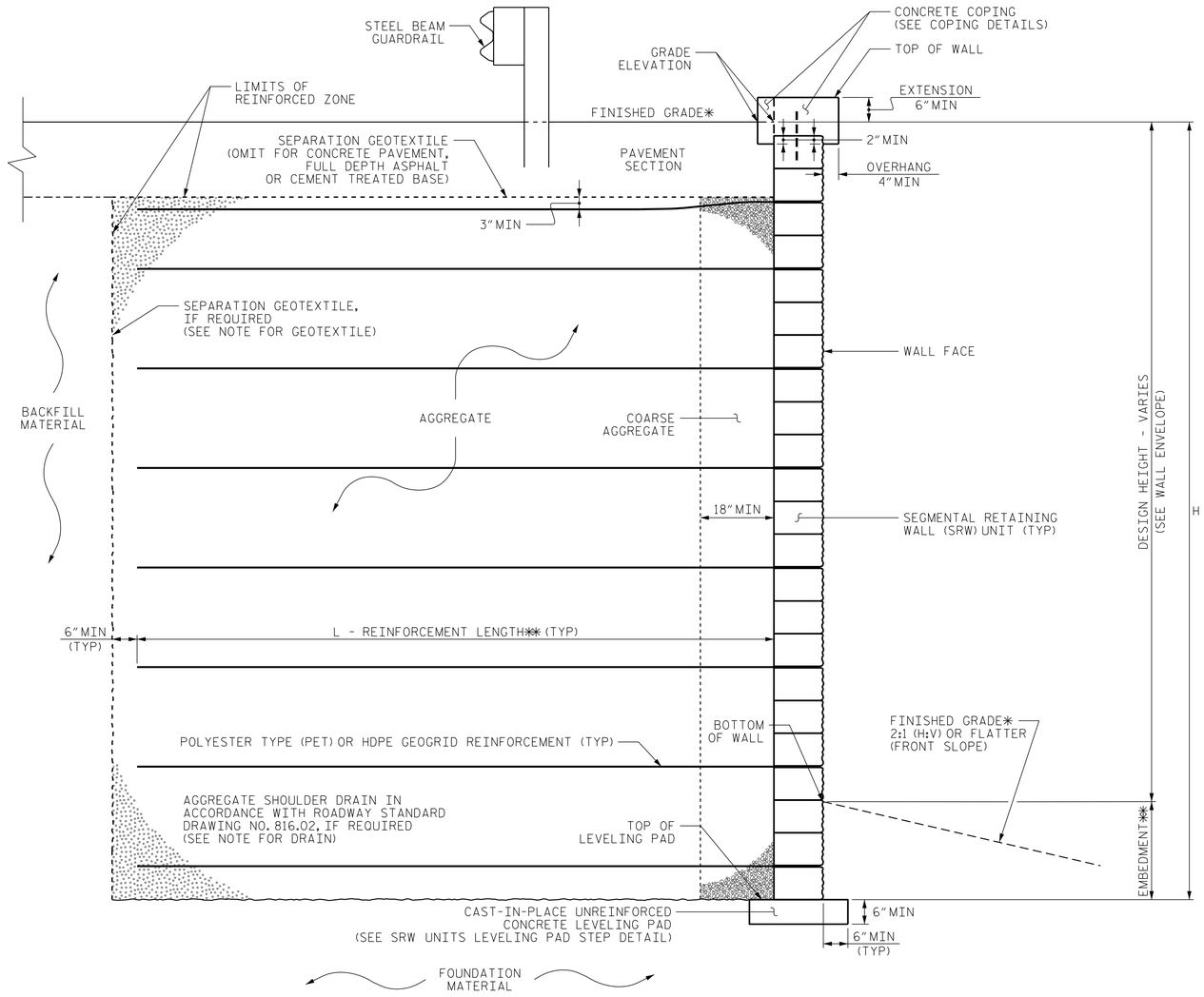

MSE WALL WITH SRW UNITS - TYPICAL SECTION

*SEE ROADWAY PLANS FOR FINISHED GRADE DETAILS.
**SEE MSE RETAINING WALLS PROVISION AND IF APPLICABLE, MSE WALL NOTES FOR EMBEDMENT AND REINFORCEMENT LENGTH REQUIREMENTS.

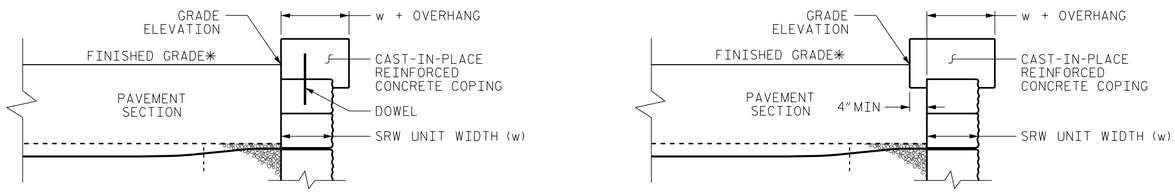

COPING DETAILS

AT THE CONTRACTOR'S OPTION, CONNECT COPING TO SRW UNITS WITH DOWELS OR EXTEND COPING DOWN BACK OF SRW UNITS.
*SEE ROADWAY PLANS FOR FINISHED GRADE DETAILS.

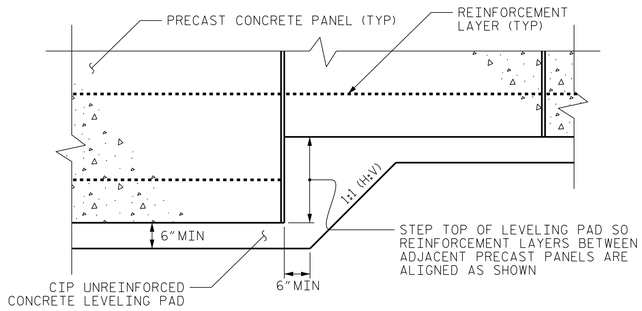

PRECAST PANELS LEVELING PAD STEP DETAIL

PREPARED BY: THEIN TUN ZAN	DATE: 11-2019
REVIEWED BY: JAMES BATTS	DATE: 11-2019

PROJECT NO.: U-5710A
NEW HANOVER COUNTY
STATION: 10+00 -W1- & 11+32.61 -W2-
SHEET 2 OF 3

NORTH CAROLINA DEPARTMENT OF TRANSPORTATION DIVISION OF HIGHWAYS

GEOTECHNICAL ENGINEERING UNIT

MSE RETAINING WALLS NO. 1 & 2 FOR BASIN
TYPICAL SECTION & DETAILS

REVISIONS						SHEET NO.
NO.	BY	DATE	NO.	BY	DATE	W-2
1	-	-	3	-	-	
2	-	-	4	-	-	

GEOTECHNICAL ENGINEER

NORTH CAROLINA PROFESSIONAL SEAL 030943 ENGINEER THEIN TUN ZAN

DocuSigned by: Thein Tun Zan 11/27/2019
A4368BC08C19472...
SIGNATURE DATE

ENGINEER

SIGNATURE DATE

DOCUMENT NOT CONSIDERED FINAL UNLESS ALL SIGNATURES COMPLETED

NOTES:

FOR MECHANICALLY STABILIZED EARTH (MSE) RETAINING WALLS, SEE MECHANICALLY STABILIZED EARTH RETAINING WALLS PROVISION.

USE AN MSE WALL SYSTEM WITH SEGMENTAL RETAINING WALL UNITS (SRW) UNITS THAT MEET ARTICLE 1040-4 OF THE STANDARD SPECIFICATIONS FOR RETAINING WALL NO. 1 & WALL NO. 2.

A SEPARATION GEOTEXTILE IS REQUIRED AT THE BACK OF THE REINFORCED ZONE FOR RETAINING WALL NO. 1 & WALL NO. 2.

A DRAIN IS NOT REQUIRED FOR RETAINING WALL NO. 1 & WALL NO. 2.

BEFORE BEGINNING MSE WALL DESIGN FOR RETAINING WALL NO. 1 & WALL NO. 2, SURVEY WALL LOCATION AND SUBMIT A REVISED WALL PROFILE VIEW (WALL ENVELOPE) FOR REVIEW. DO NOT START WALL DESIGN OR CONSTRUCTION UNTIL THE REVISED WALL ENVELOPE IS ACCEPTED.

DESIGN RETAINING WALL NO. _ FOR THE FOLLOWING:
1) H = DESIGN HEIGHT + EMBEDMENT
2) DESIGN LIFE = 100 YEARS
3) MAXIMUM FACTORED VERTICAL PRESSURE ON FOUNDATION MATERIAL = 2,100 PSF
4) MINIMUM REINFORCEMENT LENGTH (L) = 1.0H
5) MINIMUM EMBEDMENT = 2 FT
6) REINFORCED ZONE AGGREGATE PARAMETERS:

AGGREGATE TYPE*	UNIT WEIGHT (γ) PCF	FRICTION ANGLE (ϕ) DEGREES	COHESION (c) PSF
COARSE	110	38	0

*SEE MSE RETAINING WALLS PROVISION FOR COARSE AND FINE AGGREGATE MATERIAL REQUIREMENTS.

6) IN-SITU ASSUMED MATERIAL PARAMETERS:

MATERIAL TYPE	UNIT WEIGHT (γ) PCF	FRICTION ANGLE (ϕ) DEGREES	COHESION (c) PSF
BACKFILL	120	30	0
FOUNDATION	120	28	0

DESIGN RETAINING WALL NO. 1 & WALL NO. 2 FOR A LIVE LOAD (TRAFFIC) SURCHARGE.

DESIGN RETAINING WALL NO. 1 & WALL NO. 2 FOR A PIPE EXTENDING THROUGH THE WALL AS SHOWN. VERIFY PIPE LOCATION AND ELEVATION BEFORE BEGINNING MSE WALL DESIGN OR CONSTRUCTION.

EXISTING OR FUTURE OBSTRUCTIONS SUCH AS FOUNDATIONS, GUARDRAIL, FENCE OR HANDRAIL POSTS, PAVEMENTS, PIPES, INLETS OR UTILITIES MAY INTERFERE WITH REINFORCEMENT FOR RETAINING WALL NO. 1 & WALL NO. 2.

DO NOT PLACE LEVELING PAD CONCRETE, AGGREGATE OR REINFORCEMENT FOR RETAINING WALL NO. 1 & WALL NO. 2 UNTIL EXCAVATION DIMENSIONS AND FOUNDATION MATERIAL ARE APPROVED.

AT THE CONTRACTOR'S OPTION, "TEMPORARY SHORING FOR WALL CONSTRUCTION" MAY BE USED TO CONSTRUCT RETAINING WALL NO. 1 & WALL NO. 2. SEE MSE RETAINING WALLS PROVISION FOR TEMPORARY SHORING FOR WALL CONSTRUCTION.

PROJECT NO.: U-5710A

NEW HANOVER COUNTY

STATION: 10+00 -W1 & 11+32.61 -W2-

SHEET 3 OF 3

PREPARED BY: THEIN TUN ZAN	DATE: 11-2019
REVIEWED BY: JAMES BATTS	DATE: 11-2019

NORTH CAROLINA DEPARTMENT OF TRANSPORTATION DIVISION OF HIGHWAYS

GEOTECHNICAL ENGINEERING UNIT

MSE RETAINING WALLS NO. 1 & 2 FOR BASIN NOTES

REVISIONS

NO.	BY	DATE	NO.	BY	DATE
1	-	-	3	-	-
2	-	-	4	-	-

SHEET NO. W-3