PROJECT REFERENCE NO.	SHEET NO.
2016CPT.03.11.20101	1

INDEX OF SHEETS

BRUNSWICK COUNTY

LOCATION: ***SR 1177 (MAIN STREET) FROM THE WESTERN END OF MAINTENANCE TO THE EASTERN END OF MAINTENANCE***

TYPE OF WORK: ***MILLING, WIDENING, RESURFACING AND PAVEMENT MARKINGS, ETC.***

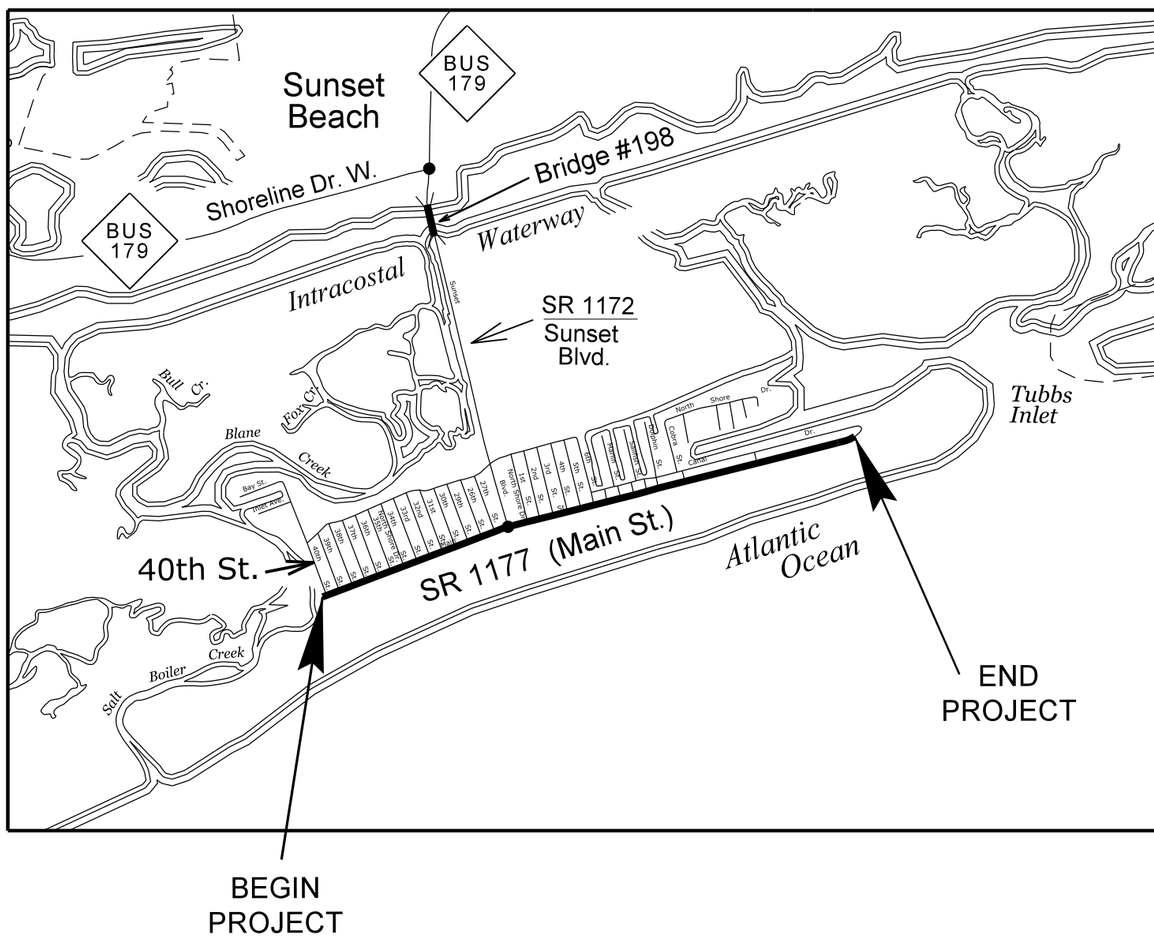

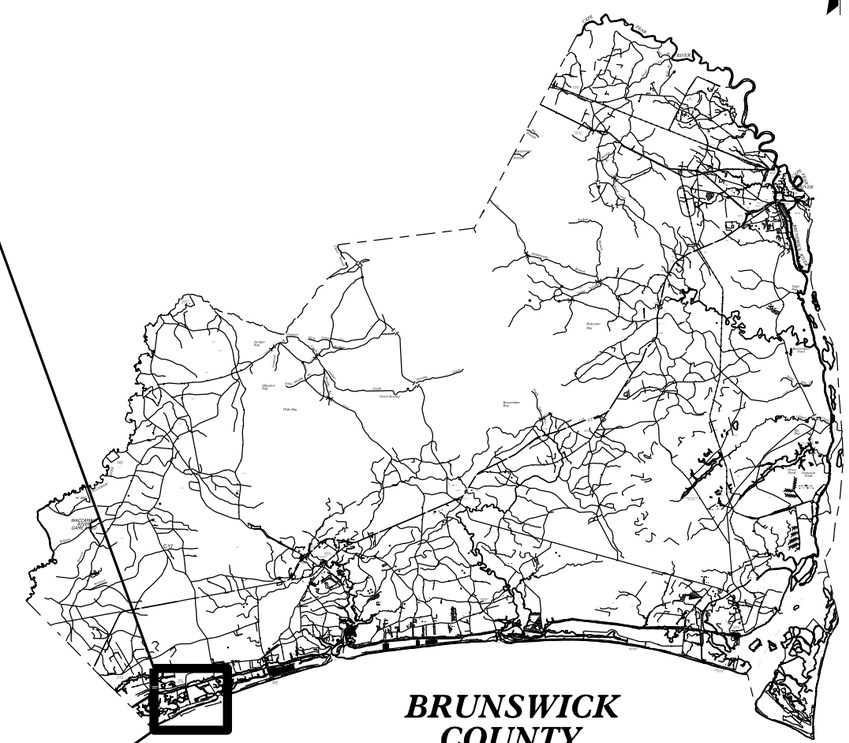

MAPS N.T.S.

8/17/99

REVISIONS

17-DEC-2015 13:54
S:\Div09\Resurfacing\Resurfacing Data\2016 Resurfacing\Brunswick County\Sunset Beach Bike Lanes\Sunset Bch_Rdy_TSH.dgn
$$$$USERNAME$$$$

PROJECT REFERENCE NO.	SHEET NO.
2016CPT.03.11.20101	2

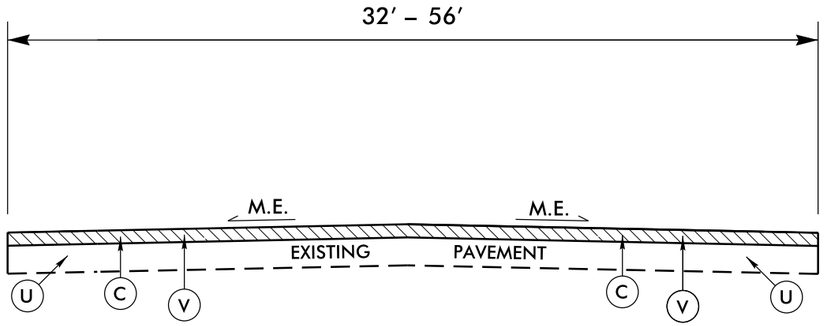

TYPICAL SECTION NO. 1

SR 1177 (MAIN STREET)
MP 0.00 – MP 0.032

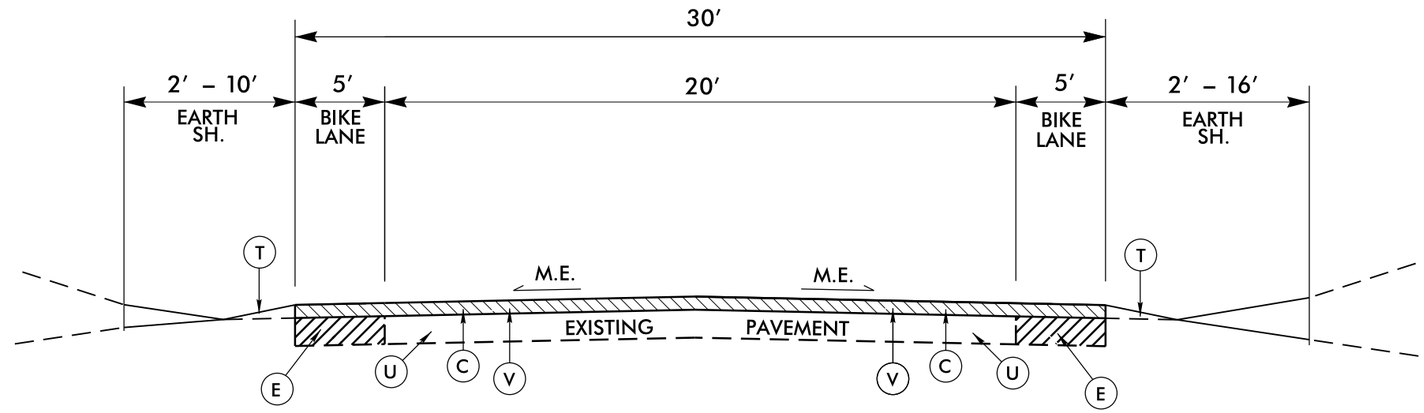

TYPICAL SECTION NO. 2

SR 1177 (MAIN STREET)
MP 0.032 – MP 1.085

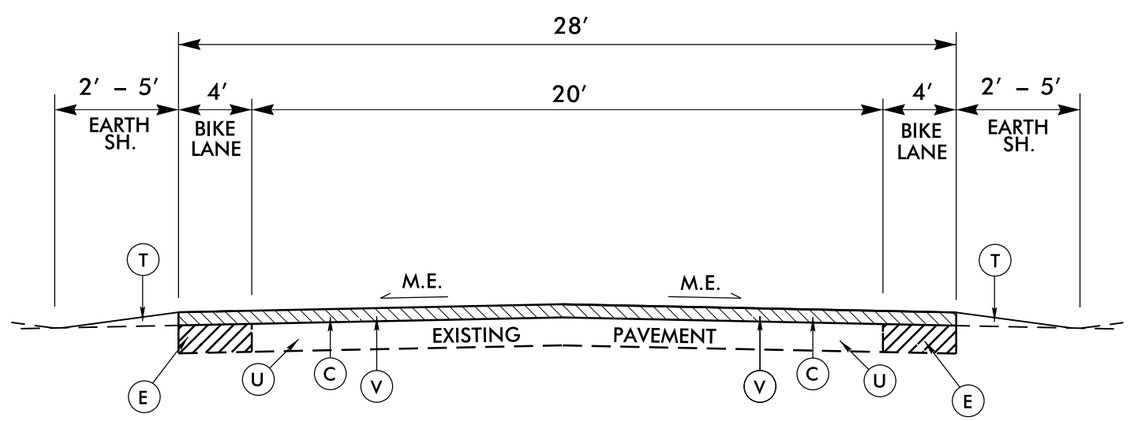

TYPICAL SECTION NO. 3

SR 1177 (MAIN STREET)
MP 1.085 – MP 1.660

PAVEMENT SCHEDULE	
C	PROP. APPROX. 1½″ DEPTH ASPHALT CONCRETE SURFACE COURSE, TYPE S9.5B, AT AN AVERAGE RATE OF 168 LBS. PER SQ.YD.
E	PROP. APPROX. 5″ DEPTH ASPHALT CONCRETE BASE COURSE, TYPE B25.0B, AT AN AVERAGE RATE OF 570 LBS. PER SQ.YD.
T	EARTH MATERIAL (SHOULDER RECONSTRUCTION)
U	EXISTING PAVEMENT
V	MILLING BITUMINOUS PAVEMENT 1½″ DEPTH.

REVISIONS

8/17/99

10-DEC-2015 17:04
S:\Design\Resurfacing\Resurfacing Data\2016 Resurfacing\Brunswick County\Sunset Beach Bike Lanes\Sunset Bch Rdy TYP & DETAIL.dgn
$$$$USERNAME$$$$

ASPHALT DRIVEWAY DETAIL

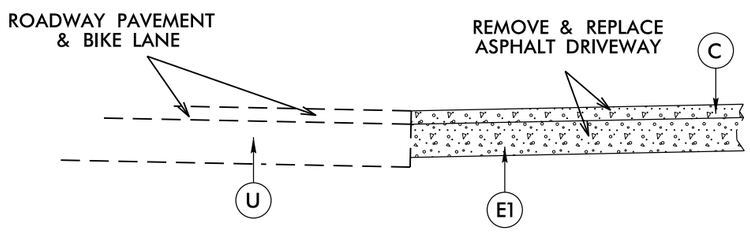

PAVEMENT SCHEDULE	
C	PROP. APPROX. 1½" DEPTH ASPHALT CONCRETE SURFACE COURSE, TYPE S9.5B, AT AN AVERAGE RATE OF 168 LBS. PER SQ.YD.
E1	PROP. APPROX. 4" DEPTH ASPHALT CONCRETE BASE COURSE, TYPE B25.0B, AT AN AVERAGE RATE OF 456 LBS. PER SQ.YD.
U	EXISTING PAVEMENT

DETAILS OF REPAIRING EXISTING PAVEMENT PRIOR TO RESURFACING FOR FULL DEPTH AND MILLING

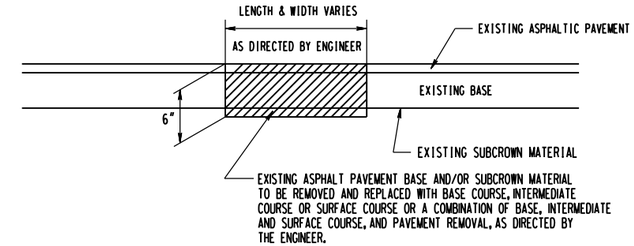

DETAIL NO. 1

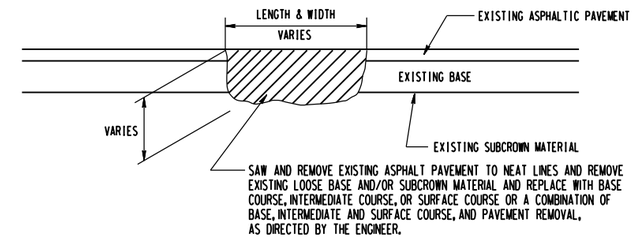

DETAIL NO. 2

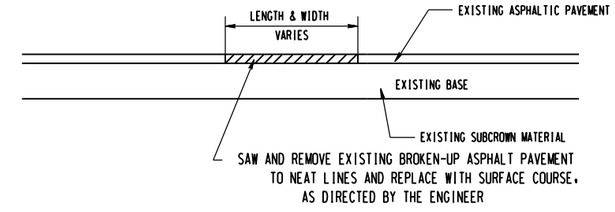

DETAIL NO. 3

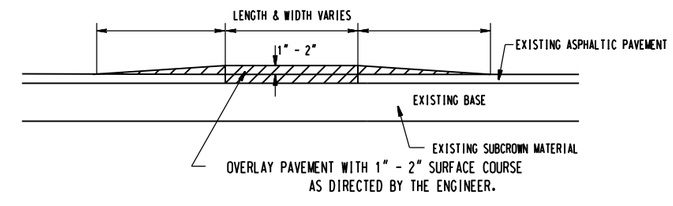

DETAIL NO. 4

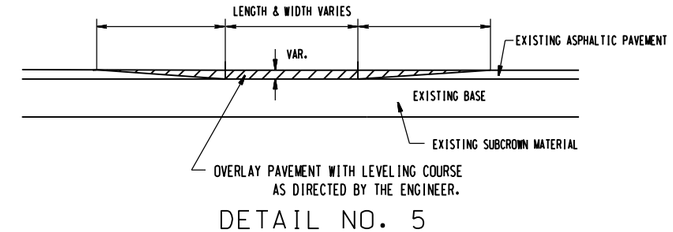

DETAIL NO. 5

REVISIONS

STATE OF
NORTH CAROLINA
DEPT. OF TRANSPORTATION
DIVISION OF HIGHWAYS
RALEIGH, N.C.

ENGLISH DETAIL DRAWING FOR

MANHOLE AND VALVE BOX ADJUSTMENTS

SHEET 1 OF 1

840D55

GENERAL NOTES:

1. USE RAPID SET GROUT, MORTAR, OR CONCRETE THAT WILL TAKE FULL SET AND BECOME LOAD BEARING WITHIN SIXTY MINUTES OF PLACEMENT WITH A MINIMUM COMPRESSIVE STRENGTH OF 4000 PSI.
2. REMOVE ALL FAULTY EXISTING BRICKWORK AND REPLACE WITH NEW BRICK MASONRY.
3. SHEER CUT EXCAVATION FOR THE ADJUSTMENT ON ALL SIDES.
4. FILL AREA BELOW 8″ DEPTH WITH 78M OR NO. 57 CLEAN STONE.
5. MIX MORTAR TO NCDOT SPECIFICATIONS.
6. MORTAR JOINTS ½″ +/- ⅛″
7. CONSTRUCT AN ASPHALT RAMP IN ACCORDANCE WITH SECTION 858-3 OF THE 2012 STANDARD SPECIFICATIONS.

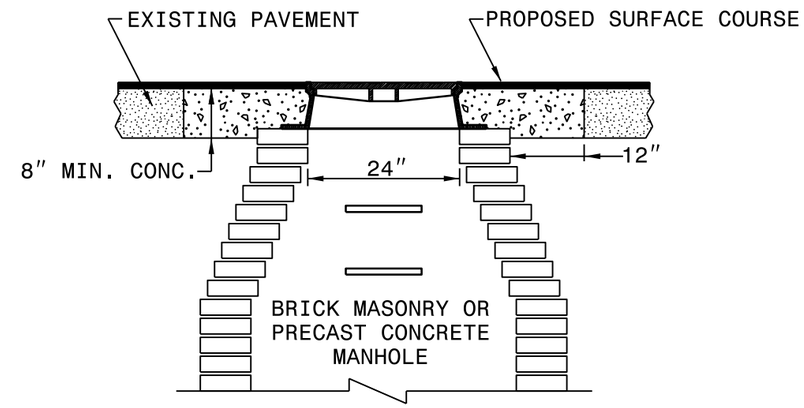

MANHOLE CONCRETE ENCASEMENT

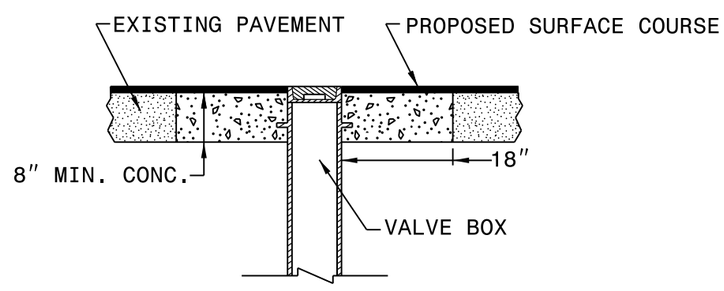

VALVE BOX CONCRETE ENCASEMENT

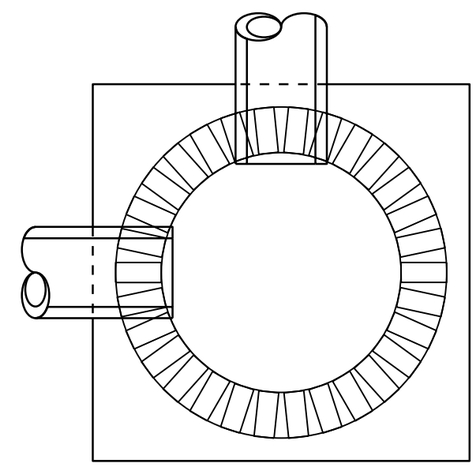

ELEVATION VIEW

PLACE BRICK ACCORDING TO ELEVATION VIEW

STATE OF
NORTH CAROLINA
DEPT. OF TRANSPORTATION
DIVISION OF HIGHWAYS
RALEIGH, N.C.

ENGLISH DETAIL DRAWING FOR

MANHOLE AND VALVE BOX ADJUSTMENTS

SHEET 1 OF 1

840D55

DROP INLET DETAILS

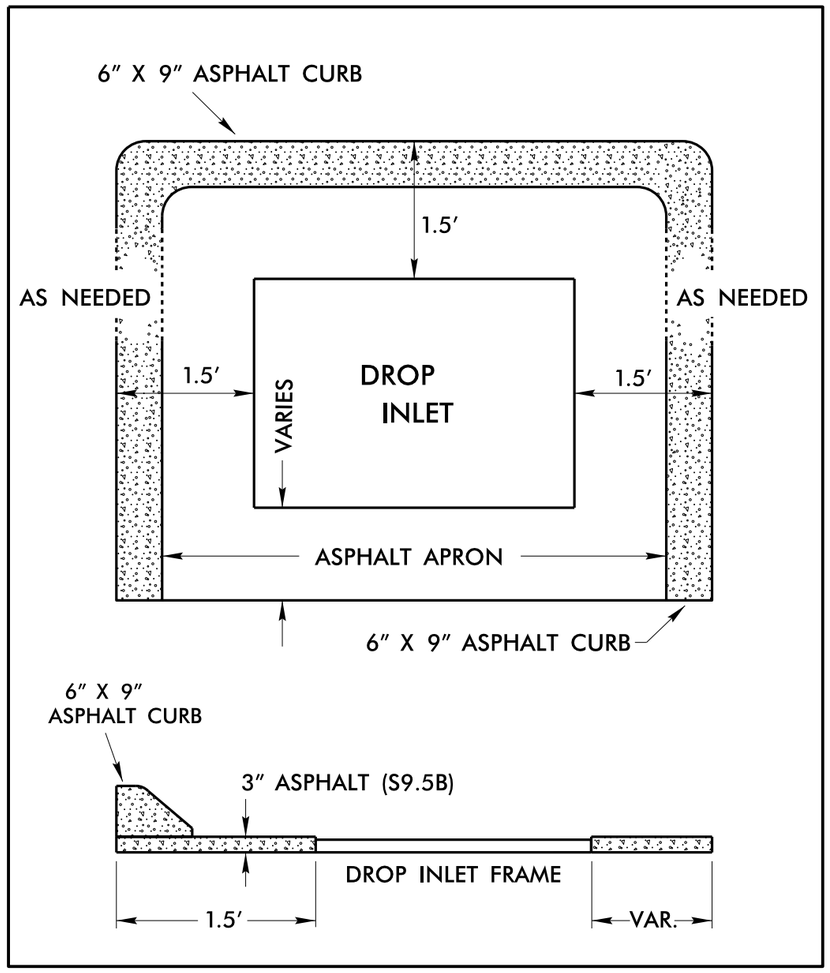

NOT TO SCALE

ACCESS PARKING SPACE SYMBOL

HEATED–IN–PLACE THERMOPLASTIC
PAVEMENT MARKING FHWA /ADA APPROVED
SYMBOL & BORDER: WHITE /BACKGROUND: BLUE

HI–VISIBILITY CROSSWALK DETAIL

SPECIAL EMPHASIS HI-VISIBILITY
CROSSWALK MARKING DETAIL
WITH BIKE LANES

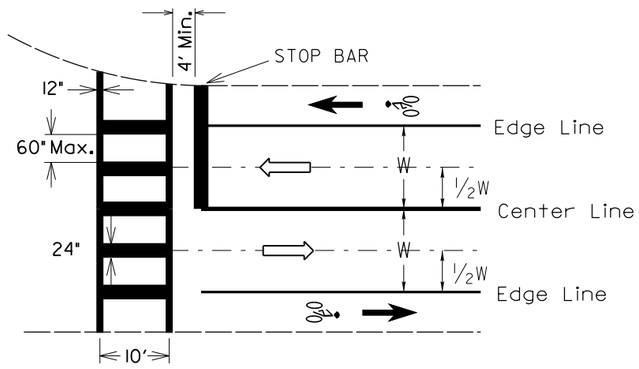

NOTES: SPACING OF CROSSWALK LINES POSITIONED
TO AVOID WHEELPATHS

REVISIONS

8/17/99

15-DEC-2015 6:19
S:\Divisions\Resurfacing\Resurfacing Data\2016 Resurfacing\Brunswick County\Sunset Beach Bike Lanes\Sunset Bch Rdy TYP & DETAIL.dgn
$$$$USERNAME$$$$

PROJECT REFERENCE NO.	SHEET NO.
2016CPT.03.11.20101	6

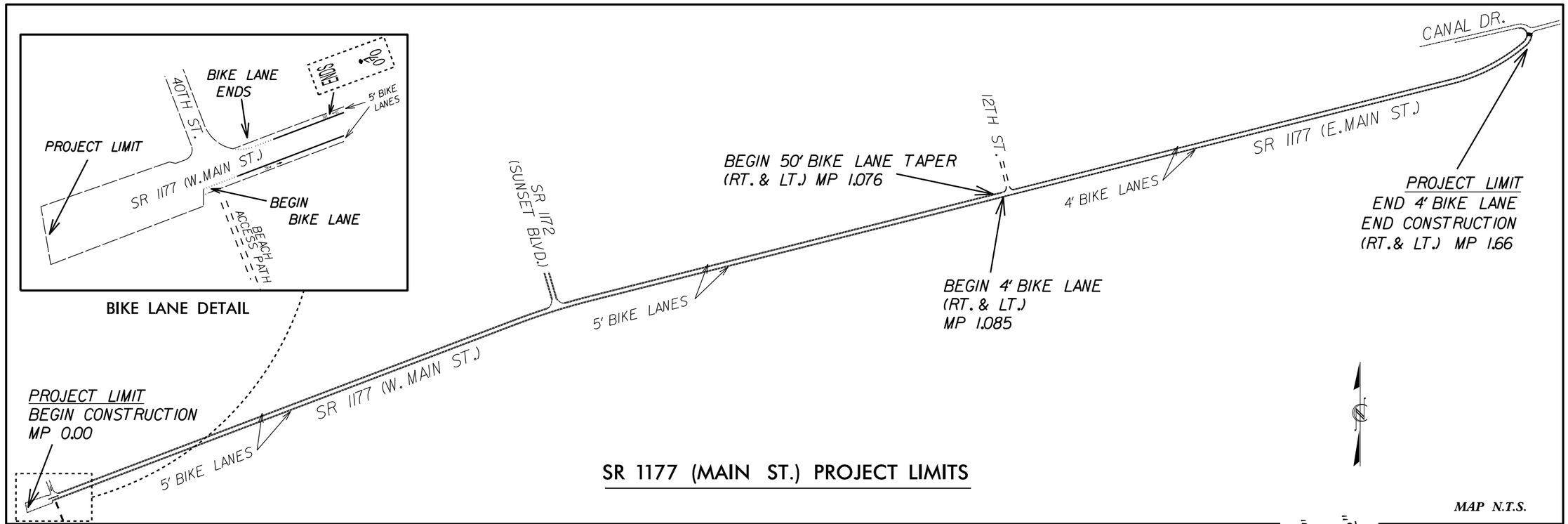

SR 1177 (MAIN ST.) PROJECT LIMITS

MAP N.T.S.

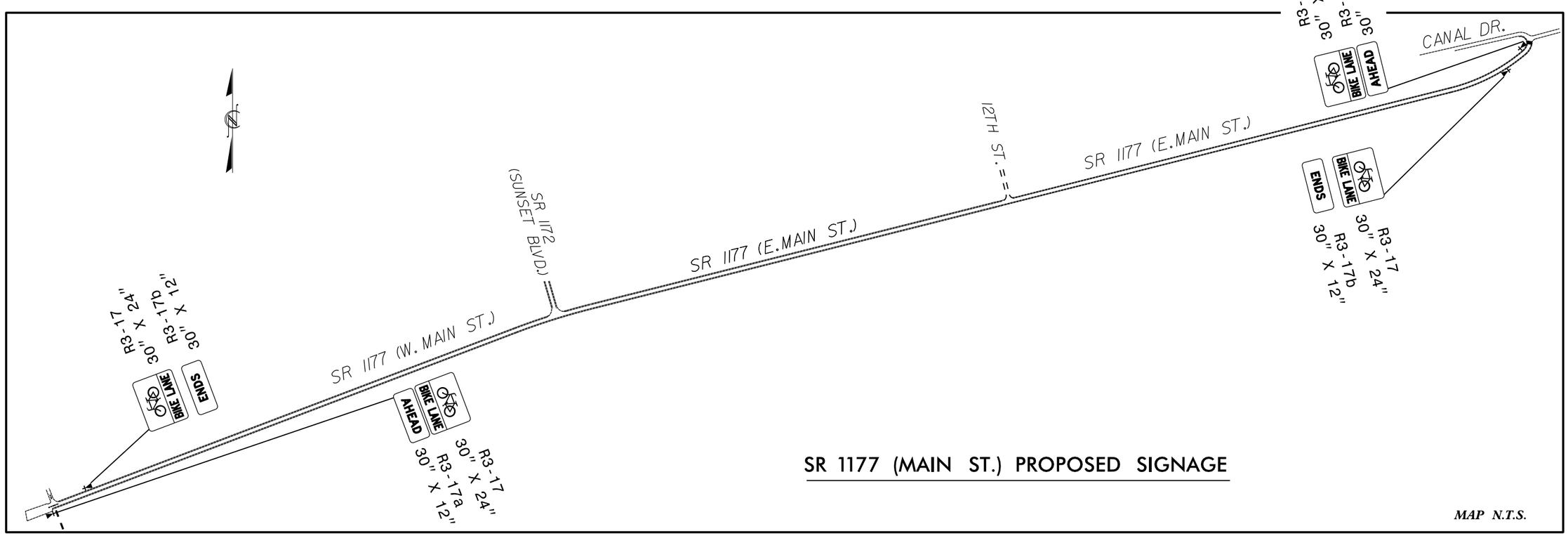

SR 1177 (MAIN ST.) PROPOSED SIGNAGE

MAP N.T.S.

REVISIONS

8/17/99

15-DEC-2015 16:05
S:\Divisions\Resurfacing\Resurfacing Data\2016 Resurfacing\Brunswick County\Sunset Beach Bike Lanes\Sunset Bch Rdy TYP & DETAIL.dgn
$$$$USERNAME$$$$

PROJECT REFERENCE NO.	SHEET NO.
2016CPT.03.11.20101	7

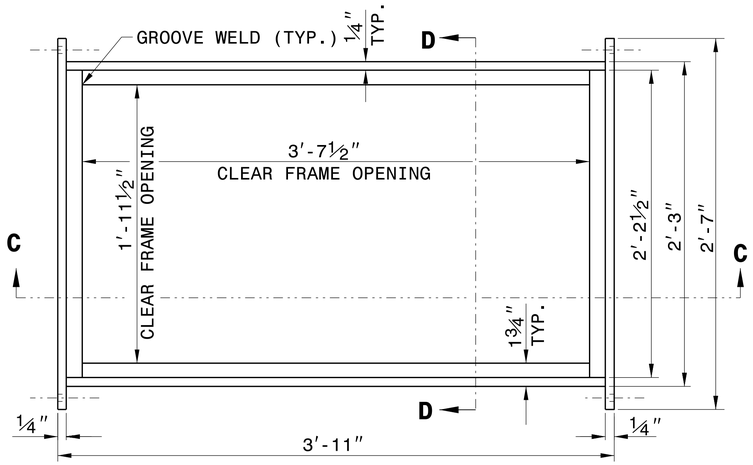

PLAN VIEW

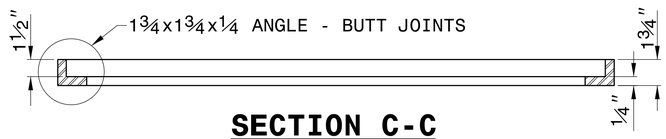

SECTION C-C
FRAME

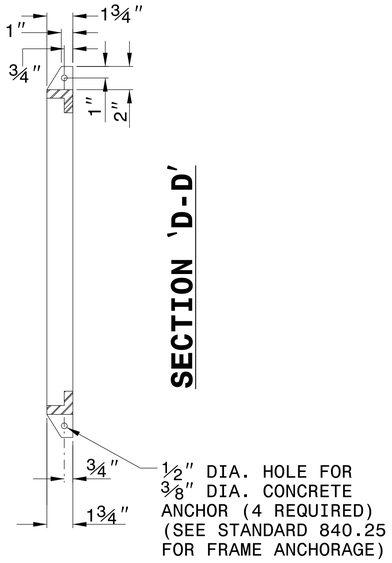

SECTION 'D-D'

NOTES:

1. HOT DIP GALVANIZE FRAME AND GRATE IN ACCORDANCE WITH ASTM DESIGNATION A-123 AND AASHTO M-111.
2. GRATE SHOULD MEET HS-20 LOADING.
3. PROVIDE STEEL CONFORMING TO THE REQUIREMENTS OF A.S.T.M. DESIGNATION A-36.
4. WELD IN ACCORDANCE WITH THE ANSI/AASHTO/AWS D1.5 WELDING CODE. SEAL WELD ALL CONNECTIONS ALONG TOP AND BOTTOM HORIZONTAL SEAMS OF CONNECTIONS IN ADDITION TO ANY REQUIRED STRUCTURAL WELDS.
5. SEE STANDARD DRAWING 840.25 FOR FRAME ANCHORAGE.

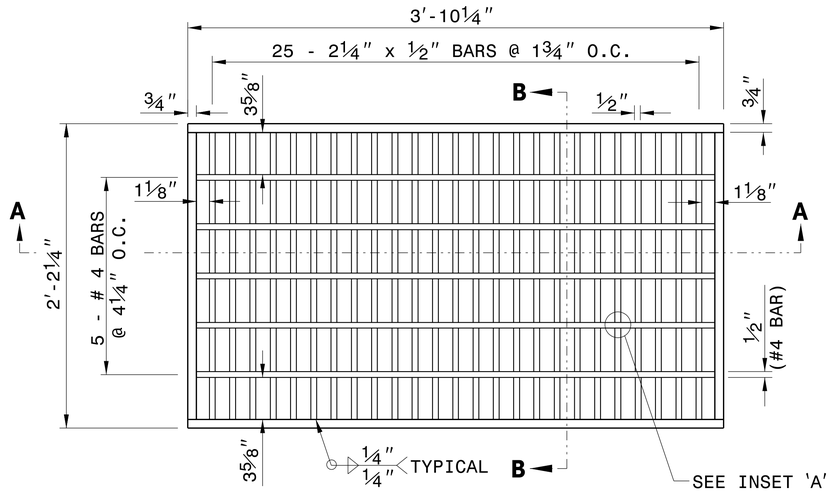

PLAN VIEW

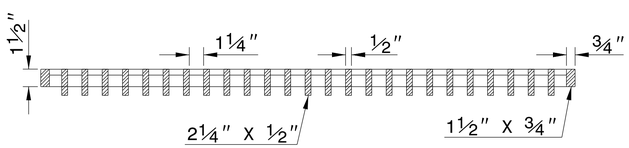

SECTION A-A
GRATE

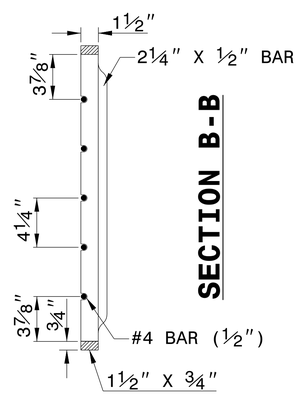

SECTION B-B

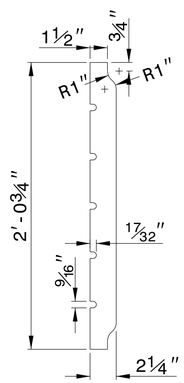

DETAIL OF BEARING BAR

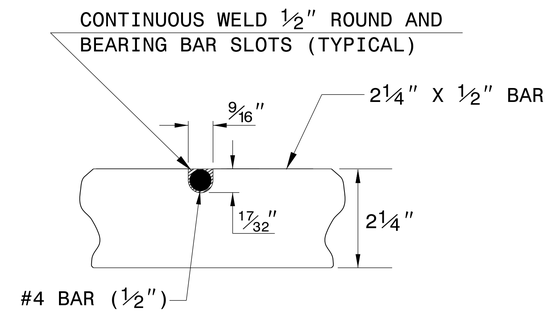

INSET 'A'

(17/32" X 9/16" NOTCH IN 2 1/4" X 1/2" BAR)

REVISED 10-10-02
FOR HS-20 LOADING

CONTRACT STANDARDS AND DEVELOPMENT UNIT
Office 919-707-6950 FAX 919-250-4119

BICYCLE SAFE STEEL GRATE AND FRAME

ORIGINAL BY: E.E. WARD DATE: 11-12-98
MODIFIED BY: E.E. WARD DATE: 10-10-02
CHECKED BY: DATE:
FILE SPEC.: /usr/stand/details/bicyclesafe.dgn

$$$$SYSTIME$$$$
$$$$USERNAME$$$$

PROJECT REFERENCE NO.	SHEET NO.
2016CPT.03.11.20101	8

PAY LIMITS FOR CURB RAMP

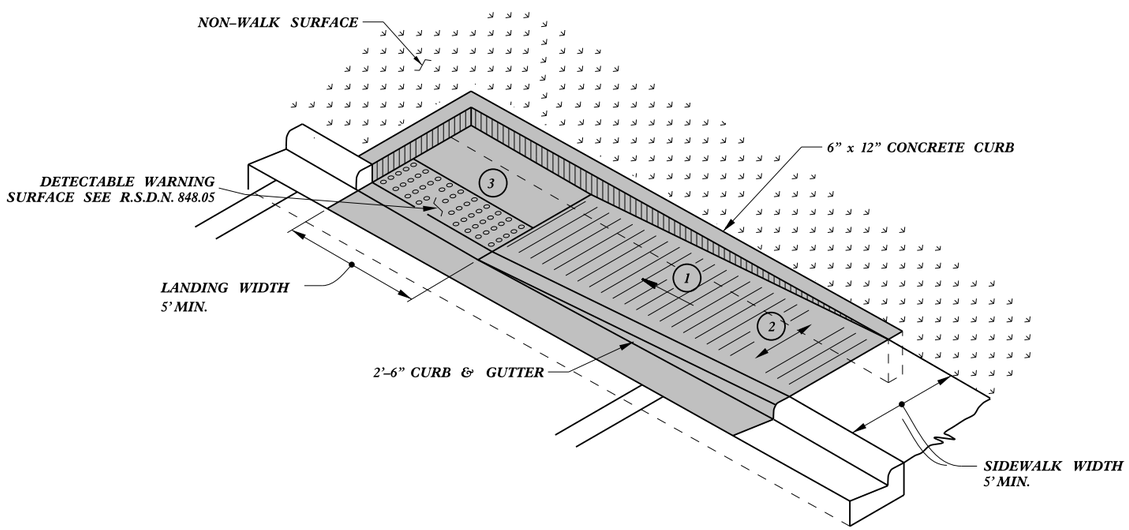

TYPE 1A

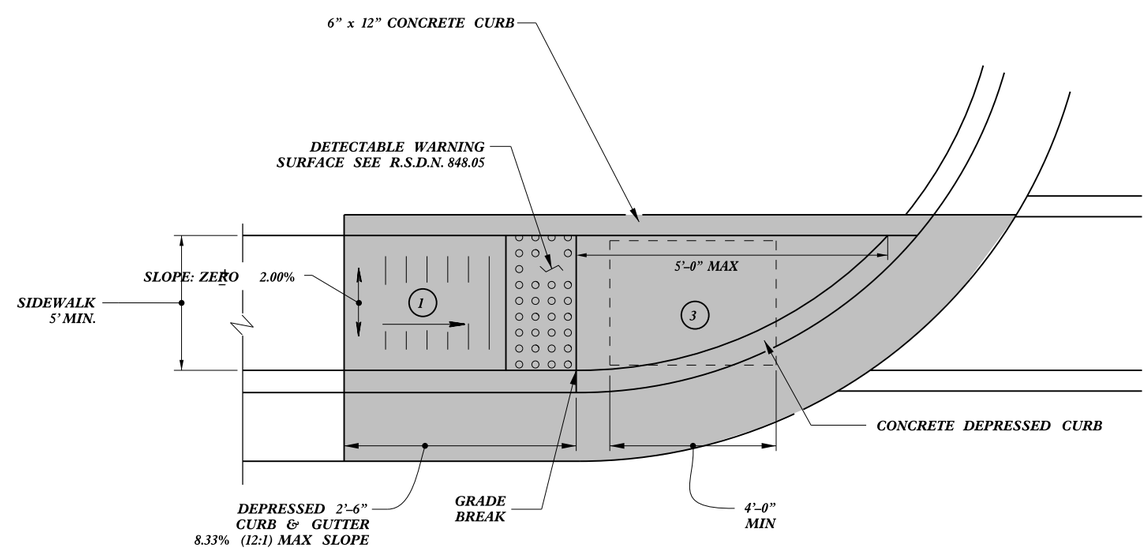

TYPE 1

1. 8.33% (12:1) MAX RAMP SLOPE
2. CROSS SLOPE: 2.00%
3. CURB RAMPS REQUIRE A (4'-0") MINIMUM LANDING WITH A MAXIMUM CROSS SLOPE AND LONGITUDINAL SLOPE OF 2.00% WHERE PEDESTRIANS PERFORM TURNING MANEUVERS. SLOPE TO DRAIN TO CURB.

REFER TO ROADWAY STANDARD DRAWING NUMBER 848.05 SHEET 3 OF 3 FOR ALL RAMP NOTES

CONTRACT STANDARDS AND DEVELOPMENT UNIT
Office 919-707-6950 FAX 919-250-4119

CURB RAMPS

Directional Ramps

ORIGINAL BY: J.S. HOWERTON DATE: 7/7/11
MODIFIED BY: DATE:
CHECKED BY: DATE:
FILE SPEC.: stds/2012CurbRamp/CurbRampDetails.dgn

5/14/99
22-MAR-2012 15:06
S:\Contracts\Standard Drawings\2012 Standard Drawings\2012 Curb Ramp Special Details\Curb Ramp Details.dgn
jhowerton AT CSD23760

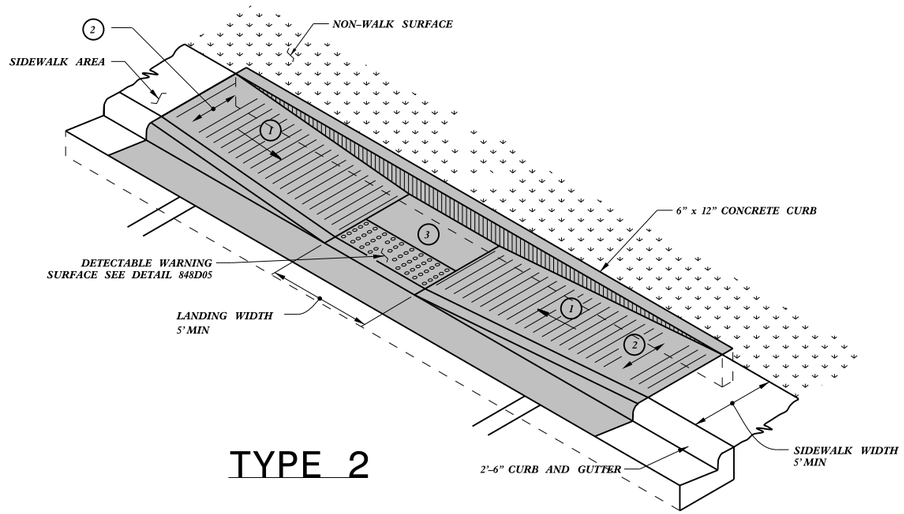

TYPE 2

PAY LIMITS FOR CURB RAMP

1. *8.33% (12:1) MAX RAMP SLOPE*
2. *CROSS SLOPE: 2.00%*
3. *CURB RAMPS REQUIRE A (4'-0") MINIMUM LANDING WITH A MAXIMUM CROSS SLOPE AND LONGITUDINAL SLOPE OF 2.00% WHERE PEDESTRIANS PERFORM TURNING MANEUVERS. SLOPE TO DRAIN TO CURB.*

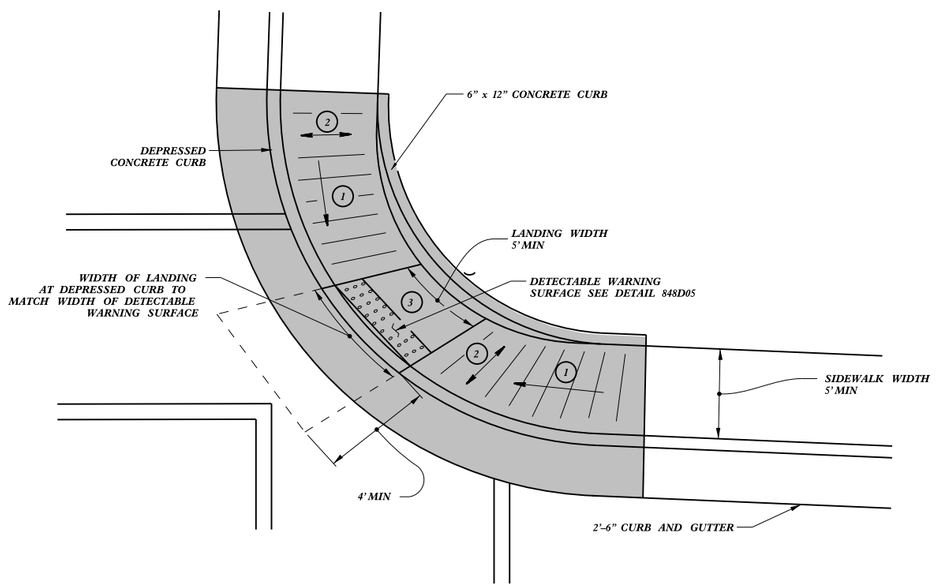

TYPE 2A

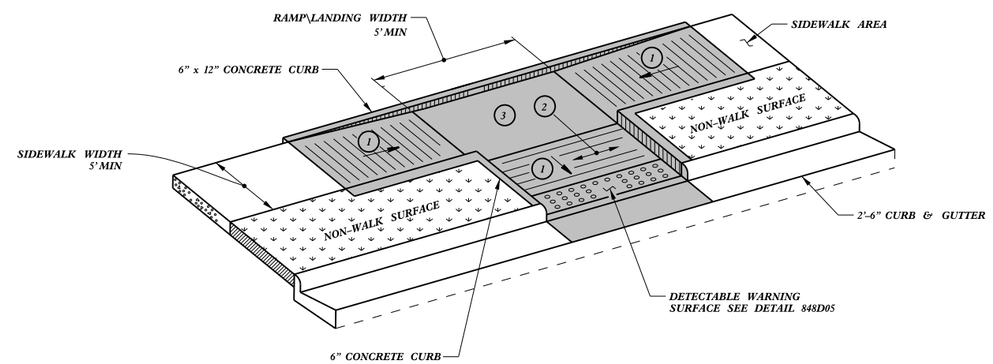

TYPE 3

REFER TO ROADWAY STANDARD DRAWING NUMBER 848.05 SHEET 3 OF 3 FOR ALL RAMP NOTES

CONTRACT STANDARDS AND DEVELOPMENT UNIT
Office 919-707-6950 FAX 919-250-4119

CURB RAMPS

Parallel Ramps

ORIGINAL BY: J.S. HOWERTON DATE: 7/7/11
MODIFIED BY: DATE:
CHECKED BY: DATE:
FILE SPEC.: stds/2012CurbRamp/CurbRampDetails.dgn

PROJECT REFERENCE NO.	SHEET NO.
2016CPT.03.11.20101	10

PAY LIMITS FOR CURB RAMP

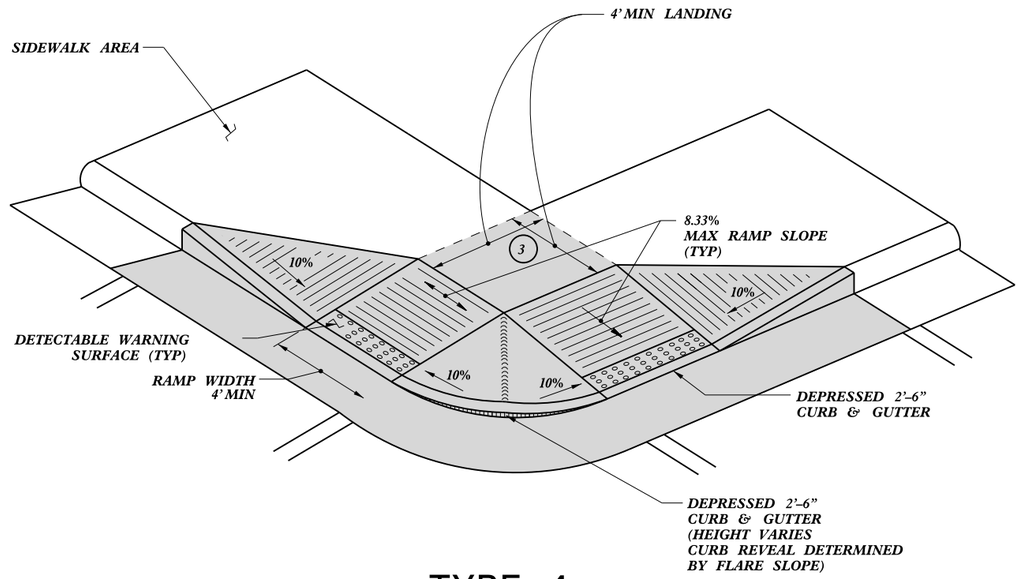

TYPE 4

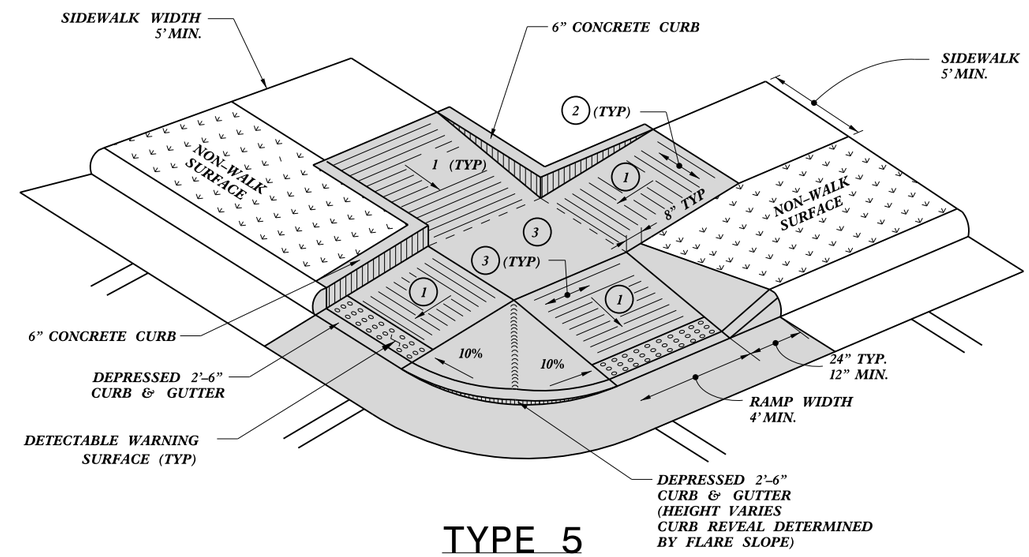

TYPE 5

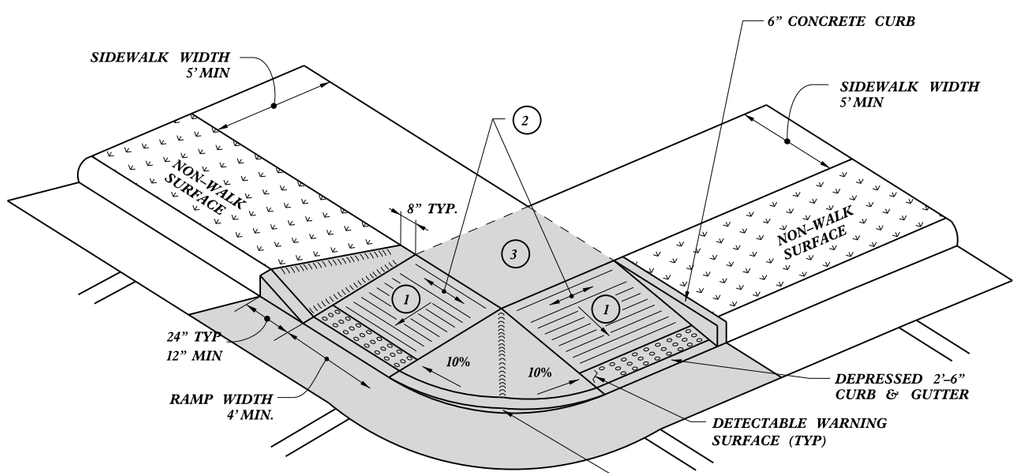

TYPE 4A

1. 8.33% (12:1) MAX RAMP SLOPE
2. CROSS SLOPE: 2.00%
3. CURB RAMPS REQUIRE A (4'-0") MINIMUM LANDING WITH A MAXIMUM CROSS SLOPE AND LONGITUDINAL SLOPE OF 2.00% WHERE PEDESTRIANS PERFORM TURNING MANEUVERS. SLOPE TO DRAIN TO CURB.

REFER TO ROADWAY STANDARD DRAWING NUMBER 848.05 SHEET 3 OF 3 FOR ALL RAMP NOTES

CONTRACT STANDARDS AND DEVELOPMENT UNIT
Office 919-707-6950 FAX 919-250-4119

CURB RAMPS

Shared Landing

ORIGINAL BY: J.S. HOWERTON DATE: 7/7/11
MODIFIED BY: DATE:
CHECKED BY: DATE:
FILE SPEC.: stds/2012CurbRamp/CurbRampDetails.dgn

5/14/99
22-MAR-2012 15:08
S:\Contracts\Special Details\Jhowerton\Standard Drawings\2012 Standard Drawings\2012 Curb Ramp Special Details\Curb Ramp Details.dgn
jhowerton AT CS0237001

5/14/99

PROJECT REFERENCE NO.	SHEET NO.
2016CPT.03.11.20101	11

PAY LIMITS FOR 1 CURB RAMP

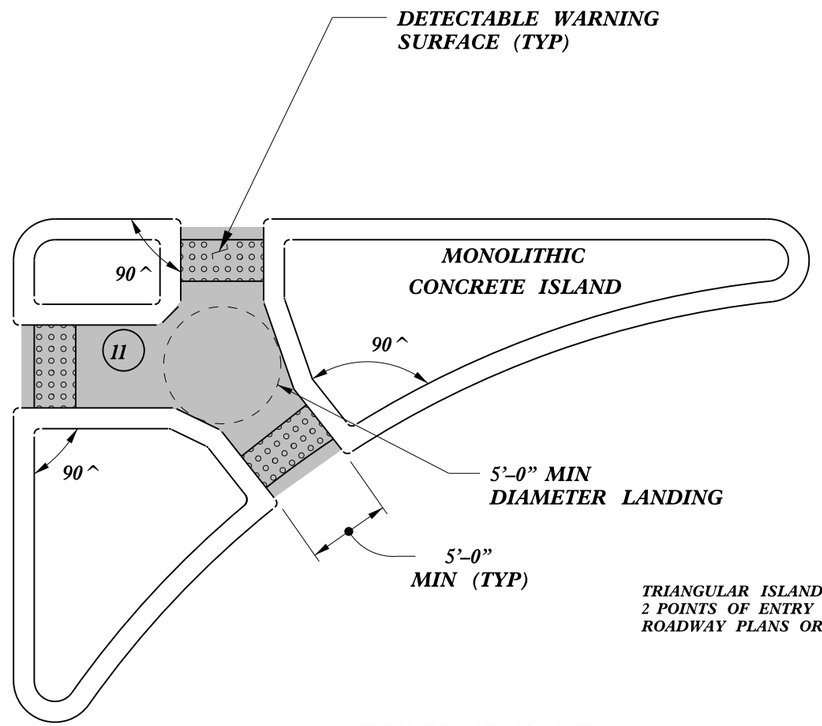

TRIANGULAR ISLANDS MAY BE CONSTRUCTED WITH ONLY 2 POINTS OF ENTRY AND EXIT AS SHOWN IN THE ROADWAY PLANS OR AS DIRECTED BY THE ENGINEER.

TRIANGULAR ISLAND WITH CUT THROUGH

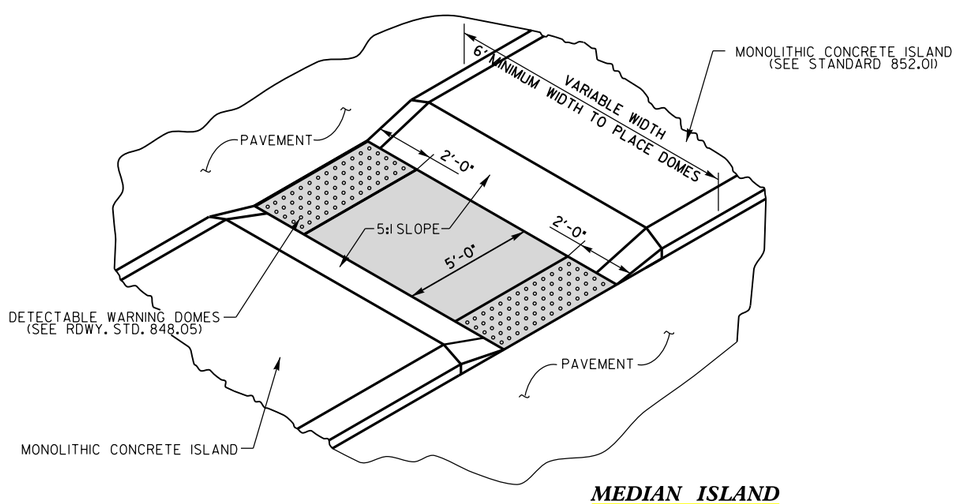

MEDIAN ISLAND WITH CUT THROUGH

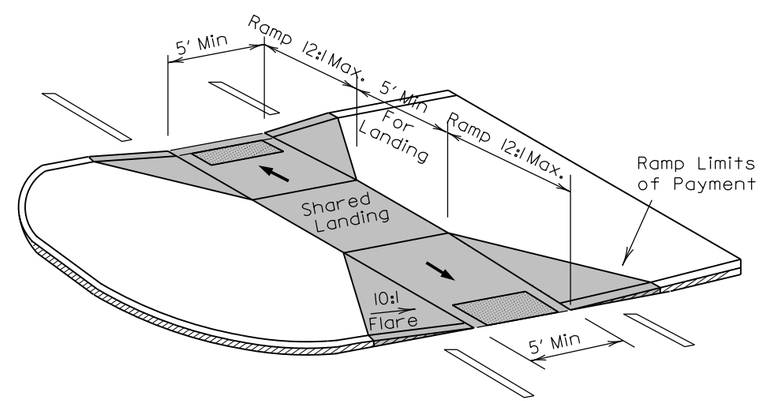

MEDIAN ISLAND CURB RAMPS

CONTRACT STANDARDS AND DEVELOPMENT UNIT
Office 919-707-6950 FAX 919-250-4119

CURB RAMPS

Median or Turn Lane Islands

ORIGINAL BY: J.S. HOWERTON DATE: 7/7/11
MODIFIED BY: DATE:
CHECKED BY: DATE:
FILE SPEC.: stds/2012CurbRamp/CurbRampDetails.dgn

$$$$$SYSTIME$$$$$
$$$$$TIME$$$$$
$$$$$USERNAME$$$$$

DIVISION OF HIGHWAYS
STATE OF NORTH CAROLINA

SOIL STABILIZATION TIMEFRAMES

SITE DESCRIPTION	STABILIZATION TIME	TIMEFRAME EXCEPTIONS
PERIMETER DIKES, SWALES, DITCHES AND SLOPES	7 DAYS	NONE
HIGH QUALITY WATER (HQW) ZONES	7 DAYS	NONE
SLOPES STEEPER THAN 3:1	7 DAYS	IF SLOPES ARE 10' OR LESS IN LENGTH AND ARE NOT STEEPER THAN 2:1, 14 DAYS ARE ALLOWED.
SLOPES 3:1 OR FLATTER	14 DAYS	7 DAYS FOR SLOPES GREATER THAN 50' IN LENGTH.
ALL OTHER AREAS WITH SLOPES FLATTER THAN 4:1	14 DAYS	NONE, EXCEPT FOR PERIMETERS AND HQW ZONES.

PROJECT REFERENCE NO.	SHEET NO.
2016CPT.03.11.20101	13

EROSION CONTROL DETAIL

NOTES: Less than 5' - 10' undisturbed buffer from ROW, ditchline, water feature, or drainage inlet, add BMP.

BMP Options: Wattle or Silt Fence

< 5' - 10' Undisturbed buffer add BMP

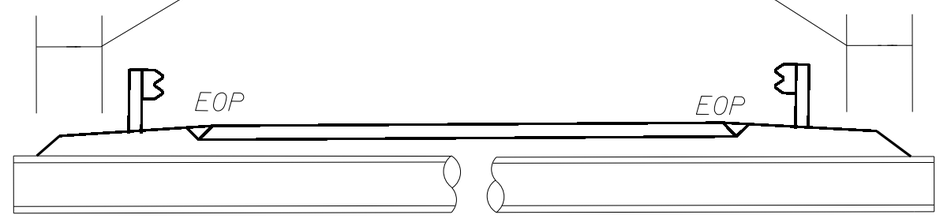

Pipe/Culvert

< 5' - 10' Undisturbed buffer from jurisdictional feature add BMP

< 5' - 10' Undisturbed buffer from ditchline, add BMP

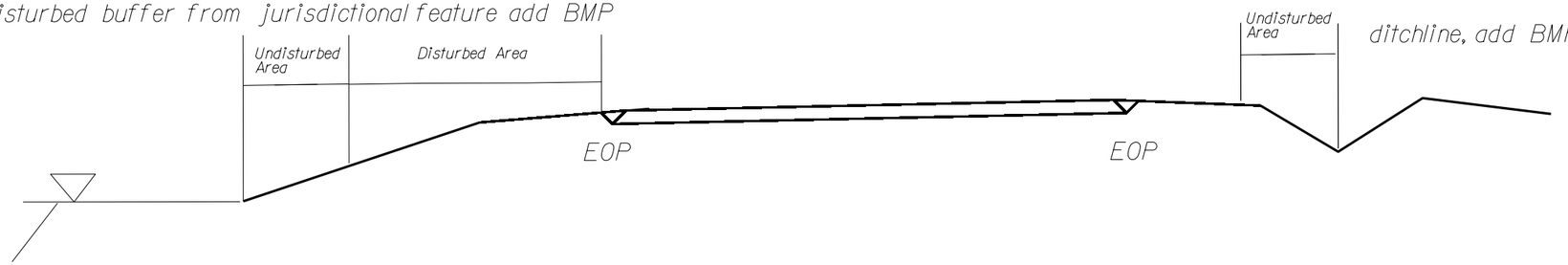

Jurisdictional Feature

Use BMP's if shoulders and/or frontslopes and/or ditchline and/or backslopes are disturbed

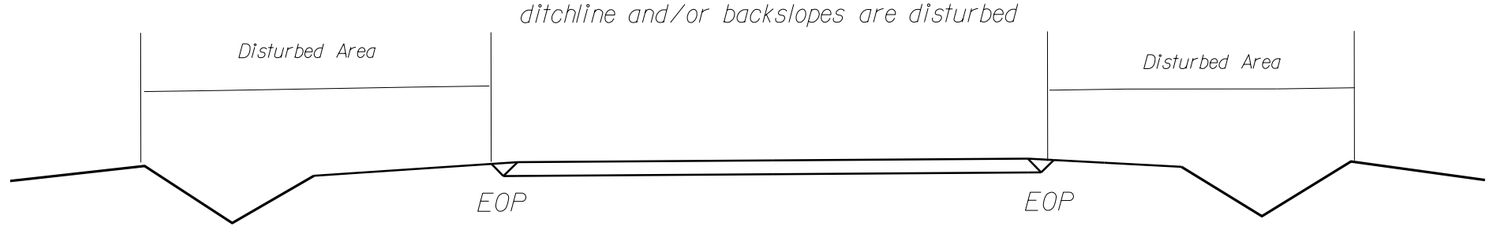

< 5' - 10' Undisturbed buffer from inlet, add wattle

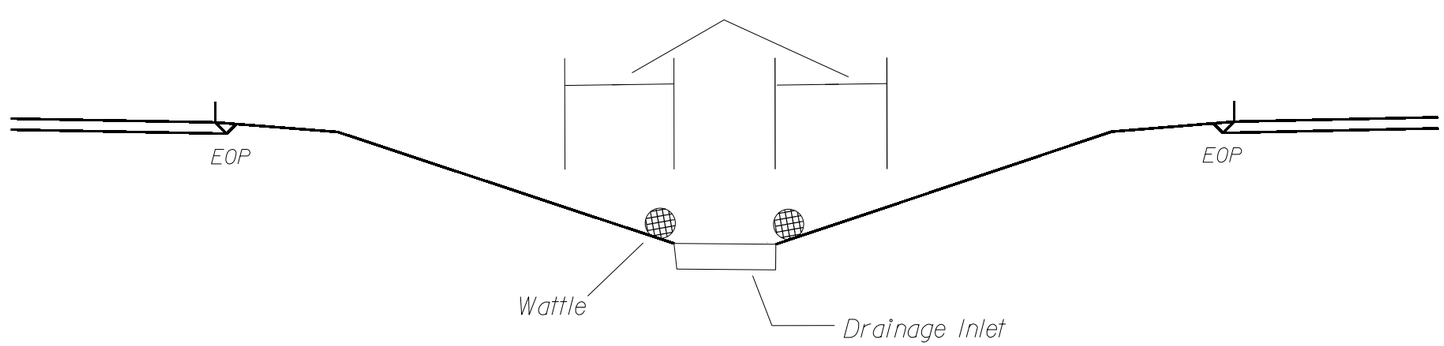

NOT TO SCALE

WATTLE DETAIL

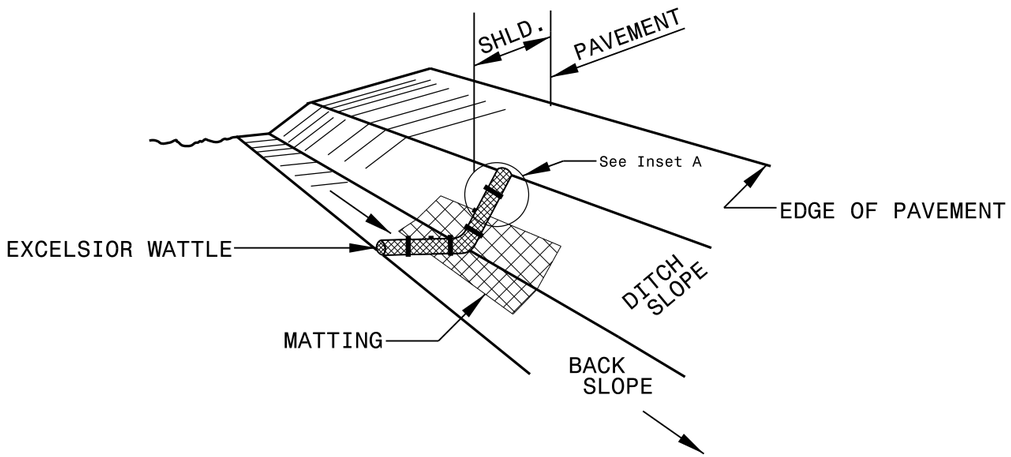

ISOMETRIC VIEW

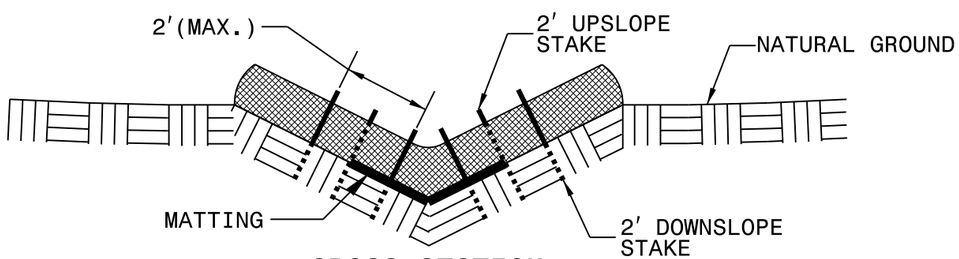

CROSS SECTION VEE DITCH

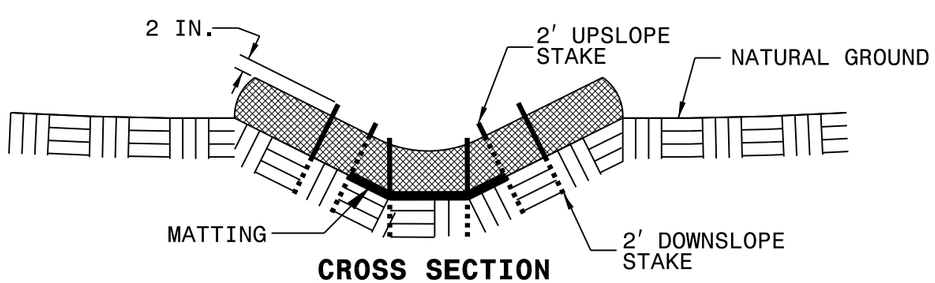

CROSS SECTION TRAPEZOIDAL DITCH

NOTES:

USE MINIMUM 12 IN. DIAMETER EXCELSIOR WATTLE.

USE 2 FT. WOODEN STAKES WITH A 2 IN. BY 2 IN. NOMINAL CROSS SECTION.

ONLY INSTALL WATTLE(S) TO A HEIGHT IN DITCH SO FLOW WILL NOT WASH AROUND WATTLE AND SCOUR DITCH SLOPES AND AS DIRECTED.

INSTALL A MINIMUM OF 2 UPSLOPE STAKES AND 4 DOWNSLOPE STAKES AT AN ANGLE TO WEDGE WATTLE TO BOTTOM OF DITCH.

PROVIDE STAPLES MADE OF 0.125 IN. DIAMETER STEEL WIRE FORMED INTO A U SHAPE NOT LESS THAN 12″ IN LENGTH.

INSTALL STAPLES APPROXIMATELY EVERY 1 LINEAR FOOT ON BOTH SIDES OF WATTLE AND AT EACH END TO SECURE IT TO THE SOIL.

INSTALL MATTING IN ACCORDANCE WITH SECTION 1631 OF THE STANDARD SPECIFICATIONS.

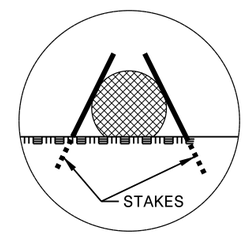

INSET A

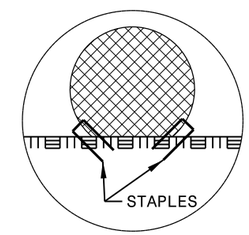

INSET B

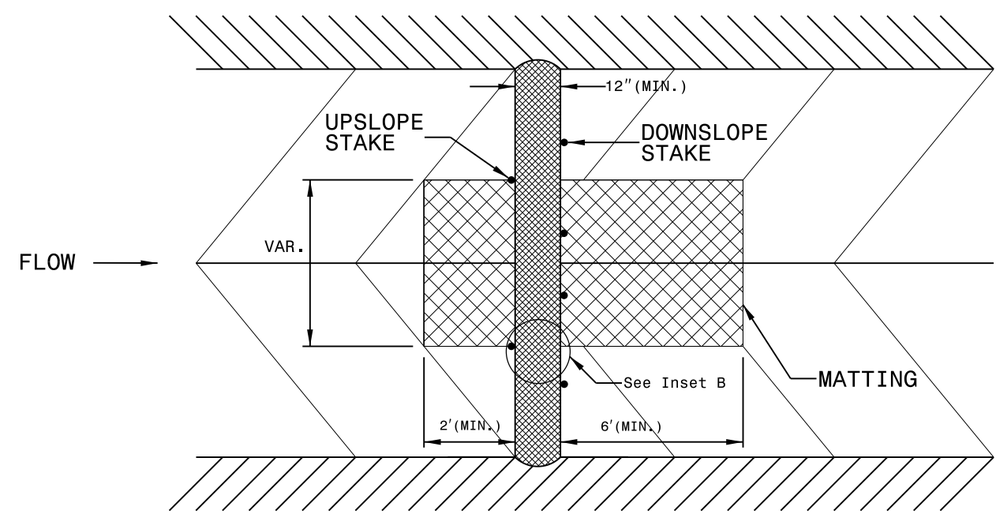

TOP VIEW

PROJECT NO.	SHEET NO.
2016CPT.03.11.20101	15

SUMMARY OF QUANTITIES

PROJECT	COUNTY	MAP	ROUTE	DESCRIPTION	TYP	LANES	LANE TYPE	FINAL SURFACE TESTING REQUIRED	WARM MIX ASPHALT REQUIRED	LENGTH	WIDTH	GRADING	BORROW EXC.	INC. STONE BASE	1 1/2" MILLING	BASE COURSE, B25.0B	SURFACE COURSE, S9.5B	ASPHALT BINDER FOR PLANT MIX	PATCHING EXISTING PAVEMENT (MILL) GENERIC	REMOVE & REPLACE ASPHALT DRIVEWAY (GENERIC)	6" X 9" ASPHALT CURB (GENERIC)	BICYCLE SAFE STEEL GRATE AND FRAME	REMOVE & REPLACE 6" CONCRETE SIDEWALK (GENERIC)	REMOVE & REPLACE 4" CONCRETE SIDEWALK (GENERIC)	REMOVE & REPLACE 6" CONCRETE DRIVEWAY (GENERIC)	REMOVE & REPLACE CURB RAMP (GENERIC)	ADJ. OF DROP INLET
NO		NO			NO					MI	FT	LS	CY	TONS	SY	TONS	TONS	TON	TON	TON	LF	EA	SY	SY	SY	EA	EA
2016CPT.03.11.20101	Brunswick	1	SR 1177 (MAIN ST.)	FROM WESTERN END OF MAINTENANCE TO EASTERN END OF MAINTENANCE (MP 0.00 TO MP 1.66)	1 & 2	2	2WU	NO	NO	1.66	30	1	352	272	19,952	2,616	2,695	277	100	3.70	385.00	7	100	25	103	3	13
TOTAL FOR MAP NO. 1										**1.66**		**1**	**352**	**272**	**19,952**	**2,616**	**2,695**	**277**	**100**	**3.70**	**385.00**	**7**	**100**	**25**	**103**	**3**	**13**
TOTAL FOR PROJ NO. 2016 CPT.03.11.20101										**1.66**		**1**	**352**	**272**	**19,952**	**2,616**	**2,695**	**277**	**100**	**3.70**	**385.00**	**7**	**100**	**25**	**103**	**3**	**13**
GRAND TOTAL										**1.66**		**1**	**352**	**272**	**19,952**	**2,616**	**2,695**	**277**	**100**	**3.70**	**385.00**	**7**	**100**	**25**	**103**	**3**	**13**

PROJECT NO.	SHEET NO.
2016CPT.03.11.20101	16

SUMMARY OF QUANTITIES

PROJECT NO	COUNTY	MAP NO	ROUTE	DESCRIPTION	TYP NO	LANES	LANE TYPE	FINAL SURFACE TESTING REQUIRED	ADJ. OF MANHOLES EA	ADJ. OF METER OR VALVE BOX EA	TEMP. SILT FENCE LF	STONE FOR EC CLASS B TON	SEDIMENT CONTROL STONE TON	TEMP. MULCHING ACR	SEED FOR TEMP. SEEDING LBS	FERTILIZER FOR TEMP. SEEDING TON	MATTING FOR EROSION CONTROL SY	1/4" HARDWARE CLOTH LF	WATTLE LF	SEED & MULCHING AC	SEED FOR REPAIR SEEDING LB	FERTILIZER FOR REPAIR SEEDING TON
2016CPT.03.11.20101	Brunswick	1	SR 1177 (MAIN ST.)	FROM WESTERN END OF MAINTENANCE TO EASTERN END OF MAINTENANCE (MP 0.00 TO MP 1.66)	1 & 2	2	2WU	NO	1	16	161	40	40	1.61	160	0.40	20	81	30	1.95	81	0.40
TOTAL FOR MAP NO. 1									**1**	**16**	**161**	**40**	**40**	**1.61**	**160**	**0.40**	**20**	**81**	**30**	**1.95**	**81**	**0.40**
TOTAL FOR PROJ NO. 2016 CPT.03.11.20101									**1**	**16**	**161**	**40**	**40**	**1.61**	**160**	**0.40**	**20**	**81**	**30**	**1.95**	**81**	**0.40**
GRAND TOTAL									**1**	**16**	**161**	**40**	**40**	**1.61**	**160**	**0.40**	**20**	**81**	**30**	**1.95**	**81**	**0.40**

PROJECT NO.	SHEET NO.
2016CPT.03.11.20101	17

THERMOPLASTIC AND PAINT QUANTITIES

PROJECT	COUNTY	MAP	ROUTE	DESCRIPTION	TYP	LANES	LANE TYPE	LENGTH	WIDTH	4025000000-E	4072000000-E	4102000000-N	4413000000-E	4457000000-N	4510000000-N	4685000000-E	4686000000-E		4690000000-E	4702000000-E	4710000000-E	4726100000-E	4726110000-E		4810000000-E	
										CONTRACTOR FURNISHED, TYPE E SIGN	SUPPORTS, 3-LB STEEL U-CHANNEL	SIGN ERECTION, TYPE E	WORK ZONE ADVANCE/GENERAL WARNING SIGNING	TEMPORARY TRAFFIC CONTROL	LAW ENFORCEMENT	4" X 90 M WHITE THERMO	4" X 120 M YELLOW THERMO	4" X 120 M WHITE THERMO	6" X 120 M WHITE THERMO	12" X 120 M WHITE THERMO	24" X 120 M WHITE THERMO	BICYCLE CHAR.,HEATED-IN-PLACE (120 MIL)	BICYCLE SYMBOL, HEATED IN PLACE (90 MIL)	BICYCLE STRAIGHT ARROW, HEATED IN PLACE (90 MIL)	4" YELLOW PAINT	4" WHITE PAINT
NO		NO			NO					SF	LF	EA	SF	LS	HR	LF	LF	LF	LF	LF	LF	EA	EA	EA	LF	LF
2016CPT.03.11.20101	Brunswick	1	SR 1177 (MAIN ST.)	FROM WESTERN END OF MAINTENANCE TO EASTERN END OF MAINTENANCE (MP 0.00 TO MP 1.66)	1 & 2	2	2WU	1.66	30	30	100	8	192	1	8.00	17,108	13,686	150	50	448	445	8	19	16	13,686	150
TOTAL FOR MAP NO. 1								**1.66**		**30**	**100**	**8**	**192**	**1**	**8**	**17,108**	**13,686**	**150**	**50**	**448**	**445**	**8**	**19**	**16**	**13,686**	**150**
TOTAL FOR PROJ NO. 2016 CPT.03.11.20101								**1.66**		**30**	**100**	**8**	**192**	**1**	**8**	**17,108**	**13,686**	**150**	**50**	**448**	**445**	**8**	**19**	**16**	**13,686**	**150**
																	13,836						**35**		**13,836**	
GRAND TOTAL								**1.66**		**30**	**100**	**8**	**192**	**1**	**8**	**17,108**	**13,686**	**150**	**50**	**448**	**445**	**8**	**19**	**16**	**13,686**	**150**
																	13,836						**35**		**13,836**	

PROJECT NO.	SHEET NO.
2016CPT.03.11.20101	18

THERMOPLASTIC AND PAINT QUANTITIES

PROJECT	COUNTY	MAP	ROUTE	DESCRIPTION	TYP	LANES	4815000000-E 6" WHITE PAINT	4825000000-E 12" WHITE PAINT	4835000000-E 24" WHITE PAINT	4900000000-N YELLOW & YELLOW MARKERS
NO		NO			NO		LF	LF	LF	EA
2016CPT.03.11.20101	Brunswick	1	SR 1177 (MAIN ST.)	FROM WESTERN END OF MAINTENANCE TO EASTERN END OF MAINTENANCE (MP 0.00 TO MP 1.66)	1 & 2	2	50	448	445	107
TOTAL FOR MAP NO. 1							**50**	**448**	**445**	**107**
TOTAL FOR PROJ NO. 2016 CPT.03.11.20101							**50**	**448**	**445**	**107**
GRAND TOTAL							**50**	**448**	**445**	**107**

PROJ. REFERENCE NO.	SHEET NO.
2016CPT.03.11.20101	19

SIGNING FOR RESURFACING PROJECTS

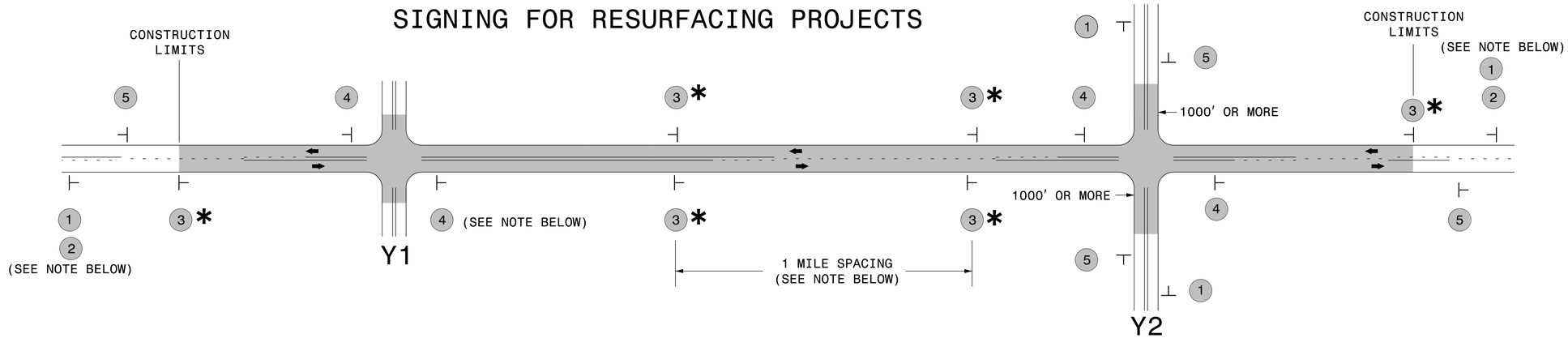

LEGEND

- ⊢ STATIONARY SIGN
- ⬅ DIRECTION OF TRAFFIC FLOW

SIGNING NOTES AND PLACEMENT PER DIRECTION

MAINLINE (-L-) SIGNING

1 — ROAD WORK AHEAD (W20-1, 48″ X 48″)

PLACE 1000′ PRIOR TO BEGINNING OF CONSTRUCTION LIMITS.
ONLY USED ON -Y- LINES IF RESURFACING LIMITS EXTEND 1000′ ALONG -Y- LINE.

2 — NEXT XX MILES (W7-3aP, 24″ X 18″)

#2 SIGN ONLY USED WHEN RESURFACING LIMITS ARE 2 OR MORE MILES IN LENGTH.
ROUND UP TO NEXT WHOLE NUMBER.(NO FRACTIONAL OR DECIMAL NUMBERS)

3* — LOW/SOFT SHOULDER (SP 13107, 48″ X 48″)

PLACE INITIALLY AT THE CONSTRUCTION LIMITS AND SPACED 1 MILE APART THEREAFTER. IF NO -Y- LINES EXIST, PLACE 2ND SET ½ MILE FROM THE CONSTRUCTION LIMITS AND THEN SPACE 1 MILE THEREAFTER.

4 — ROAD UNDER CONST (SP 13106, 48″ X 48″)

THESE ARE FOR -Y- LINES THAT ARE "THROUGH" ROADWAYS. DEAD END AND SUBDIVISION ROADS ARE NOT "THROUGH" ROADWAYS. INSTALL 500′ +/- FROM EACH -Y- LINE APPROACH AS SHOWN ABOVE. FOR MULTIPLE -Y- LINES THAT ARE SEPARATED BY 0.25 MILES OR LESS, TREAT AS A SINGLE UNIT AND INSTALL WITHIN 500′ OF EACH APPROACH. A MAXIMUM OF 2 SIGN SETS PER MILE. DO NOT INSTALL WHEN -Y- LINES ARE WITHIN 0.5 MILES FROM "END ROAD WORK" SIGN.

5 — END ROAD WORK (G20-2 A, 48″ X 24″)

PLACE 500′ FOLLOWING THE END OF CONSTRUCTION LIMITS.

-Y- LINE SIGNING

NO REQUIRED STATIONARY SIGNING FOR THE FOLLOWING -Y- LINE CONDITIONS:

1) LESS THAN 1000′ OF RESURFACING ALONG -Y- LINE
2) SUBDIVISION ROADS
3) DEAD END ROADS

WHEN PAVING/CONSTRUCTION ACTIVITIES PROCEED ACROSS AN UNSIGNED -Y- LINE, ADVANCE WARNING PORTABLE SIGNS SHALL BE USED ALONG THE -Y- LINE AS SHOWN BELOW. REMOVE UPON COMPLETION OF WORK.

ROAD WORK AHEAD (W20-1, 48″ X 48″) — PLACED 500′ IN ADVANCE OF FLAGGER.

W20-7 A (48″ X 48″) — PLACED 250′ IN ADVANCE OF FLAGGER.

* SIGNING FOR ASPHALT SURFACE TREATMENTS (ONLY)

SUBSTITUTE LOW/SOFT SHOULDER SIGNS BY ALTERNATING THE FOLLOWING TWO SIGNS:
STARTING WITH "UNMARKED PAVEMENT AHEAD" (SP 06026) FOLLOWED BY "LOOSE GRAVEL" (W8-7).

DIVISION OF HIGHWAYS · STATE OF NORTH CAROLINA · DEPARTMENT OF TRANSPORTATION · WORK ZONE TRAFFIC CONTROL

RESURFACING
ADVANCE WARNING SIGNS
FOR
RURAL AND SUBURBAN
2 LANE ROADWAYS