DocuSign Envelope ID: FC9CB676-E649-4C41-BFE6-E8E2A3D7D64A

09/08/99

PROJECT: 17BP.3.R.41

CONTRACT: DC00075

See Sheet 1-A For Index of Sheets
See Sheet 1-B For Conventional Symbols

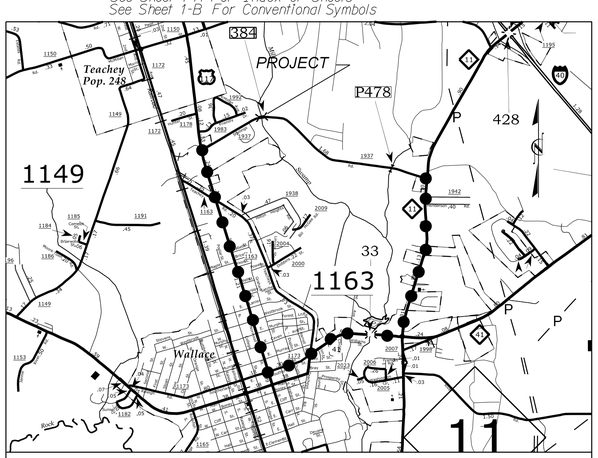

VICINITY MAP — OFF SITE DETOUR

STATE OF NORTH CAROLINA
DIVISION OF HIGHWAYS

DUPLIN COUNTY

LOCATION: BRIDGE NO. 384 OVER MILL BRANCH ON SR 1937 (STALLINGS RD.)

TYPE OF WORK: GRADING, DRAINAGE, PAVING, & STRUCTURE

STATE	STATE PROJECT REFERENCE NO.	SHEET NO.	TOTAL SHEETS
N.C.	17BP.3.R.41	1	

STATE PROJ. NO.	F. A. PROJ. NO.	DESCRIPTION
17BP.3.R.41		PE,R/W,CONST

NC GRID
NAD 83\11

4

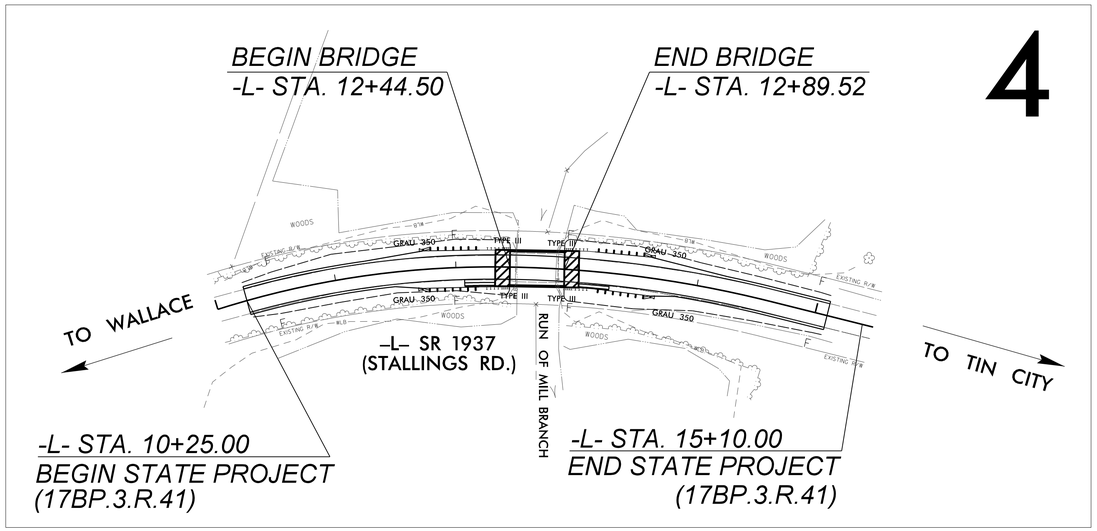

GRAPHIC SCALES

50′ 25′ 0 50′ 100′
PLANS

50′ 25′ 0 50′ 100′
PROFILE (HORIZONTAL)

10′ 5′ 0 10′ 20′
PROFILE (VERTICAL)

DESIGN DATA

ADT 2013 = 1,300
ADT 2033 = 1,600
DHV = 9 %
D = 60 %
T = 6 %
V = 40 MPH

FUNC CLASS =
RURAL LOCAL
SUBREGIONAL TIER

PROJECT LENGTH

LENGTH ROADWAY PROJECT 17BP.3.R.41 = 0.083 Miles
TOTAL STRUCTURE PROJECT 17BP.3.R.41 = 0.009 Miles
TOTAL LENGTH STATE PROJECT 17BP.3.R.41 = 0.092 Miles

Prepared in the Office of:

LOCHNER
H. W. LOCHNER, INC.
2840 PLAZA PLACE, SUITE 202
RALEIGH, NC 27612
(919) 571-7111
NC License Number F-0159

ECOLOGICAL ENGINEERING
NC FIRM LICENSE No: F-1148
1151 SE Cary Parkway
Suite 101
Cary, NC 27518
(919) 557-0929

2012 STANDARD SPECIFICATIONS

RIGHT OF WAY DATE:
MARCH 31, 2014

LETTING DATE:
FEBRUARY 4, 2016

BRIAN K. EASON, PE
PROJECT ENGINEER

DAVID W. MARTIN
PROJECT DESIGN ENGINEER

DANIEL WAUGH, PE
NCDOT CONTACT

HYDRAULICS ENGINEER

DocuSigned by:
Frank F Fleming
B1DD721AA9FA4A6...
SIGNATURE: 12/8/2015

NORTH CAROLINA PROFESSIONAL SEAL 20147 ENGINEER FRANK F. FLEMING P.E.

ROADWAY DESIGN ENGINEER

DocuSigned by:
Brian K. Eason
9AF015AD7ACC48F...
SIGNATURE: 12/8/2015

NORTH CAROLINA PROFESSIONAL SEAL 25523 ENGINEER BRIAN K. EASON P.E.

STATE OF NORTH CAROLINA DEPARTMENT OF TRANSPORTATION

12/8/2015 9:36:33 AM
I:\RAL_PRJ\0000093I\7\TIP\Roadway\Proj\300384_Rdy_tsh.dgn
LOCHNER

DocuSign Envelope ID: 96079C90-8EE5-48A9-8183-6161BC4EAD59

5/14/99

LOCHNER
H. W. LOCHNER, INC.
2840 PLAZA PLACE, SUITE 202
RALEIGH, NC 27612
(919) 571-7111
NC License Number F-0159

PROJECT REFERENCE NO.	SHEET NO.
17BP.3.R.41	1-A

ROADWAY DESIGN ENGINEER
12/10/2015
NORTH CAROLINA PROFESSIONAL SEAL 25523 ENGINEER BRIAN K. EASON
DocuSigned by:
Brian K. Eason
9AF015AD7ACC48F...

INDEX OF SHEETS

SHEET NUMBER	SHEET
1	TITLE SHEET
1-A	INDEX OF SHEETS, GENERAL NOTES, LIST OF STANDARD DRAWINGS
1-B	CONVENTIONAL SYMBOLS
2	PAVEMENT SCHEDULE, TYPICAL SECTIONS, MILLING DETAIL, AND WEDGING DETAIL
3	SUMMARY OF DRAINAGE QUANTITIES SUMMARY OF GUARDRAIL, EARTHWORK SUMMARY, SHOULDER BERM GUTTER SUMMARY, RIGHT OF WAY SUMMARY, CENTERLINE COORDINATE LIST, AND PAVEMENT REMOVAL SUMMARY
4	PLAN / PROFILE SHEET
TMP-1 THRU TMP-2	TRANSPORTATION MANAGEMENT PLANS
SP-1	SIGN DESIGN PLANS
EC-1 THRU EC-4	EROSION CONTROL PLANS
UO-1 THRU UO-2	UTILITY BY OTHERS PLANS
X-A	CROSS-SECTION SUMMARY
X-1 THRU X-3	CROSS-SECTIONS
S-1 THRU S-14	STRUCTURE PLANS

2012 ROADWAY ENGLISH STANDARD DRAWINGS

EFFECTIVE: 01-17-12
REVISED: 07/30/12

The following Roadway Standards as appear in "Roadway Standard Drawings" Highway Design Branch - N. C. Department of Transportation - Raleigh, N. C., Dated January, 2012 are applicable to this project and by reference hereby are considered a part of these plans:

STD.NO.	TITLE
DIVISION 2 - EARTHWORK	
200.02	Method of Clearing - Method II
225.02	Guide for Grading Subgrade - Secondary and Local
225.04	Method of Obtaining Superelevation - Two Lane Pavement
DIVISION 3 - PIPE CULVERTS	
300.01	Method of Pipe Installation
DIVISION 4 - MAJOR STRUCTURES	
422.10	Reinforced Bridge Approach Fills
DIVISION 5 - SUBGRADE, BASES AND SHOULDERS	
560.01	Method of Shoulder Construction - High Side of Superelevated Curve - Method I
DIVISION 8 - INCIDENTALS	
840.25	Anchorage for Frames - Brick or Concrete or Precast
840.29	Frames and Narrow Slot Flat Grates
840.35	Traffic Bearing Grated Drop Inlet - for Cast Iron Double Frame and Grates
840.46	Traffic Bearing Precast Drainage Structure
846.01	Concrete Curb, Gutter and Curb & Gutter
846.04	Drop Inlet Installation in Shoulder Berm Gutter
862.01	Guardrail Placement
862.02	Guardrail Installation
862.03	Structure Anchor Units (Details in Lieu of Standard Drawing as March 2013 Letting)
876.02	Guide for Rip Rap at Pipe Outlets

GENERAL NOTES:

2012 SPECIFICATIONS
EFFECTIVE: 01/17/12
REVISED: 10/31/14

GRADE LINE:
GRADING AND SURFACING:
THE GRADE LINES SHOWN DENOTE THE FINISHED ELEVATION OF THE PROPOSED SURFACING AT GRADE POINTS SHOWN ON THE TYPICAL SECTIONS. GRADE LINES MAY BE ADJUSTED AT THEIR BEGINNING AND ENDING AND AT STRUCTURES AS DIRECTED BY THE ENGINEER IN ORDER TO SECURE A PROPER TIE-IN.

CLEARING:
CLEARING ON THIS PROJECT SHALL BE PERFORMED TO THE LIMITS ESTABLISHED BY METHOD II.

SUPERELEVATION:
ALL CURVES ON THIS PROJECT SHALL BE SUPERELEVATED IN ACCORDANCE WITH STD. NO. 225.04 USING THE RATE OF SUPERELEVATION AND RUNOFF SHOWN ON THE PLANS. SUPERELEVATION IS TO BE REVOLVED ABOUT THE GRADE POINTS SHOWN ON THE TYPICAL SECTIONS.

SHOULDER CONSTRUCTION:
ASPHALT, EARTH, AND CONCRETE SHOULDER CONSTRUCTION ON THE HIGH SIDE OF SUPERELEVATED CURVES SHALL BE IN ACCORDANCE WITH STD. NO. 560.01.

GUARDRAIL:
THE GUARDRAIL LOCATIONS SHOWN ON THE PLANS MAY BE ADJUSTED DURING CONSTRUCTION AS DIRECTED BY THE ENGINEER. THE CONTRACTOR SHOULD CONSULT WITH THE ENGINEER PRIOR TO ORDERING GUARDRAIL MATERIAL.

SUBSURFACE PLANS:
NO SUBSURFACE PLANS ARE AVAILABLE FOR THIS PROJECT. THE CONTRACTOR SHOULD MAKE HIS OWN INVESTIGATIONS AS TO THE SUBSURFACE CONDITIONS.

END BENTS:
THE ENGINEER SHALL CHECK THE STRUCTURE END BENT PLANS, DETAILS, AND CROSS-SECTION PRIOR TO SETTING OF THE SLOPE STAKES FOR THE EMBANKMENT OR EXCAVATION APPROACHING A BRIDGE.

UTILITIES:
UTILITY OWNERS ON THIS PROJECT ARE DUPLIN COUNTY UTILITIES, TIME WARNER CABLE, CENTURY LINK, AND PIEDMONT NATURAL GAS. ANY RELOCATION OF EXISTING UTILITIES WILL BE ACCOMPLISHED BY OTHERS.

12/8/2015 10:47:40 AM
LOCHNER
L:\PRJ\0000093\17BP\Roadway\Proj\300384_Rdy_01A.dgn

12/05/11

PROJECT REFERENCE NO.	SHEET NO.
17BP.3.R.41	1B

Note: Not to Scale

****S.U.E. = Subsurface Utility Engineering***

STATE OF NORTH CAROLINA
DIVISION OF HIGHWAYS

CONVENTIONAL PLAN SHEET SYMBOLS

BOUNDARIES AND PROPERTY:

- State Line
- County Line
- Township Line
- City Line
- Reservation Line
- Property Line
- Existing Iron Pin — EIP
- Property Corner
- Property Monument — ECM
- Parcel/Sequence Number — 123
- Existing Fence Line
- Proposed Woven Wire Fence
- Proposed Chain Link Fence
- Proposed Barbed Wire Fence
- Existing Wetland Boundary — WLB
- Proposed Wetland Boundary — WLB
- Existing Endangered Animal Boundary — EAB
- Existing Endangered Plant Boundary — EPB
- Known Soil Contamination: Area or Site
- Potential Soil Contamination: Area or Site

BUILDINGS AND OTHER CULTURE:

- Gas Pump Vent or U/G Tank Cap
- Sign — S
- Well — W
- Small Mine
- Foundation
- Area Outline
- Cemetery
- Building
- School
- Church
- Dam

HYDROLOGY:

- Stream or Body of Water
- Hydro, Pool or Reservoir
- Jurisdictional Stream — JS
- Buffer Zone 1 — BZ 1
- Buffer Zone 2 — BZ 2
- Flow Arrow
- Disappearing Stream
- Spring
- Wetland
- Proposed Lateral, Tail, Head Ditch — FLOW
- False Sump

RAILROADS:

- Standard Gauge — CSX TRANSPORTATION
- RR Signal Milepost — MILEPOST 35
- Switch — SWITCH
- RR Abandoned
- RR Dismantled

RIGHT OF WAY:

- Baseline Control Point
- Existing Right of Way Marker
- Existing Right of Way Line
- Proposed Right of Way Line — RW
- Proposed Right of Way Line with Iron Pin and Cap Marker — RW
- Proposed Right of Way Line with Concrete or Granite R/W Marker — RW
- Proposed Control of Access Line with Concrete C/A Marker — CA
- Existing Control of Access — CA
- Proposed Control of Access — CA
- Existing Easement Line — E
- Proposed Temporary Construction Easement — E
- Proposed Temporary Drainage Easement — TDE
- Proposed Permanent Drainage Easement — PDE
- Proposed Permanent Drainage / Utility Easement — DUE
- Proposed Permanent Utility Easement — PUE
- Proposed Temporary Utility Easement — TUE
- Proposed Aerial Utility Easement — AUE
- Proposed Permanent Easement with Iron Pin and Cap Marker

ROADS AND RELATED FEATURES:

- Existing Edge of Pavement
- Existing Curb
- Proposed Slope Stakes Cut — C
- Proposed Slope Stakes Fill — F
- Proposed Curb Ramp — CR
- Existing Metal Guardrail
- Proposed Guardrail
- Existing Cable Guiderail
- Proposed Cable Guiderail
- Equality Symbol
- Pavement Removal

VEGETATION:

- Single Tree
- Single Shrub
- Hedge
- Woods Line
- Orchard
- Vineyard — Vineyard

EXISTING STRUCTURES:

MAJOR:

- Bridge, Tunnel or Box Culvert — CONC
- Bridge Wing Wall, Head Wall and End Wall — CONC WW

MINOR:

- Head and End Wall — CONC HW
- Pipe Culvert
- Footbridge
- Drainage Box: Catch Basin, DI or JB — CB
- Paved Ditch Gutter
- Storm Sewer Manhole — S
- Storm Sewer — S

UTILITIES:

POWER:

- Existing Power Pole
- Proposed Power Pole
- Existing Joint Use Pole
- Proposed Joint Use Pole
- Power Manhole — P
- Power Line Tower
- Power Transformer
- U/G Power Cable Hand Hole
- H-Frame Pole
- Recorded U/G Power Line — P
- Designated U/G Power Line (S.U.E.*) — P

TELEPHONE:

- Existing Telephone Pole
- Proposed Telephone Pole
- Telephone Manhole — T
- Telephone Booth
- Telephone Pedestal — T
- Telephone Cell Tower
- U/G Telephone Cable Hand Hole — HH
- Recorded U/G Telephone Cable — T
- Designated U/G Telephone Cable (S.U.E.*) — T
- Recorded U/G Telephone Conduit — TC
- Designated U/G Telephone Conduit (S.U.E.*) — TC
- Recorded U/G Fiber Optics Cable — T FO
- Designated U/G Fiber Optics Cable (S.U.E.*) — T FO

WATER:

- Water Manhole — W
- Water Meter
- Water Valve
- Water Hydrant
- Recorded U/G Water Line
- Designated U/G Water Line (S.U.E.*)
- Above Ground Water Line — A/G Water

TV:

- TV Satellite Dish
- TV Pedestal — C
- TV Tower
- U/G TV Cable Hand Hole — HH
- Recorded U/G TV Cable — TV
- Designated U/G TV Cable (S.U.E.*) — TV
- Recorded U/G Fiber Optic Cable — TV FO
- Designated U/G Fiber Optic Cable (S.U.E.*) — TV FO

GAS:

- Gas Valve
- Gas Meter
- Recorded U/G Gas Line — G
- Designated U/G Gas Line (S.U.E.*) — G
- Above Ground Gas Line — A/G Gas

SANITARY SEWER:

- Sanitary Sewer Manhole
- Sanitary Sewer Cleanout
- U/G Sanitary Sewer Line — SS
- Above Ground Sanitary Sewer — A/G Sanitary Sewer
- Recorded SS Forced Main Line — FSS
- Designated SS Forced Main Line (S.U.E.*) — FSS

MISCELLANEOUS:

- Utility Pole
- Utility Pole with Base
- Utility Located Object
- Utility Traffic Signal Box — S
- Utility Unknown U/G Line — ?UTL
- U/G Tank; Water, Gas, Oil
- Underground Storage Tank, Approx. Loc. — UST
- A/G Tank; Water, Gas, Oil
- Geoenvironmental Boring
- U/G Test Hole (S.U.E.*)
- Abandoned According to Utility Records — AATUR
- End of Information — E.O.I.

DocuSign Envelope ID: 96079C90-8EE5-48A9-8183-6161BC4EAD59

5/14/99

PAVEMENT SCHEDULE

C1	PROP. APPROX. 3″ ASPHALT CONCRETE SURFACE COURSE, TYPE SF9.5A, AT AN AVERAGE RATE OF 165 LBS. PER SQ. YD. IN EACH OF TWO LAYERS	T	EARTH MATERIAL.
C2	PROP. VAR. DEPTH ASPHALT CONCRETE SURFACE COURSE, TYPE SF9.5A, AT AN AVERAGE RATE OF 110 LBS. PER SQ. YD. PER 1″ DEPTH. TO BE PLACED IN LAYERS NOT TO EXCEED 1 1/2″ IN DEPTH.	U	EXISTING PAVEMENT.
E1	PROP. APPROX. 5″ ASPHALT CONCRETE BASE COURSE, TYPE B25.0B, AT AN AVERAGE RATE OF 570 LBS. PER SQ. YD.	V	MILLING (VARIABLE DEPTH)
E2	PROP. VAR. DEPTH ASPHALT CONCRETE BASE COURSE, TYPE B25.0B, AT AN AVERAGE RATE OF 114 LBS. PER SQ. YD. PER 1″ DEPTH. TO BE PLACED IN LAYERS NOT LESS THAN 3″ IN DEPTH OR GREATER THAN 5½″ IN DEPTH.	W	VARIABLE DEPTH ASPHALT PAVEMENT (SEE WEDGING DETAIL No. 1)
R1	SHOULDER BERM GUTTER		

NOTE: PAVEMENT EDGE SLOPES ARE 1:1 UNLESS SHOWN OTHERWISE.

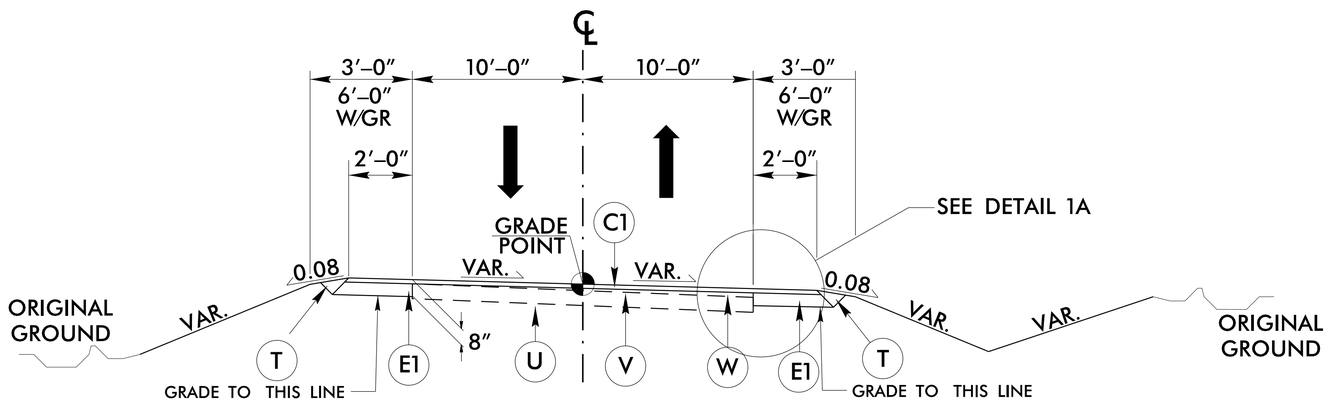

TYPICAL SECTION NO. 1

USE TYPICAL SECTION NO. 1

–L– STA. 10+25.00 TO STA. 12+44.50
–L– STA. 12+89.52 TO STA. 15+10.00

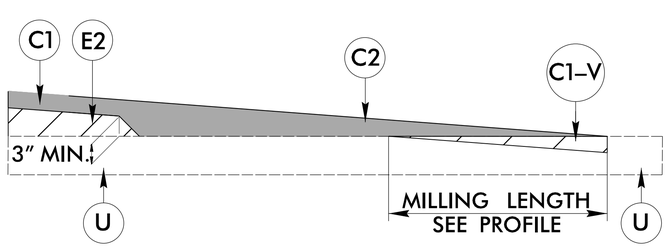

MILLING DETAIL

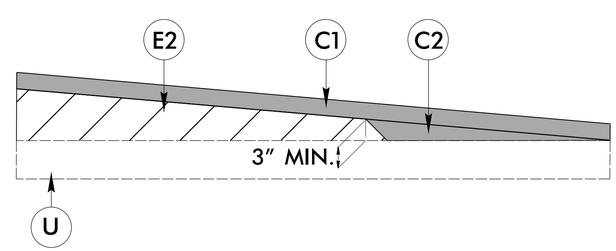

Wedging Detail For Resurfacing

WEDGING DETAIL

LOCHNER
H. W. LOCHNER, INC.
2840 PLAZA PLACE, SUITE 202
RALEIGH, NC 27612
(919) 571-7111
NC License Number F-0159

PROJECT REFERENCE NO.	SHEET NO. 2
17BP.3.R.41	2
R/W SHEET NO.	

SEAL ONLY FOR ROADWAY DESIGN ELEMENTS

ROADWAY DESIGN ENGINEER
12/10/2015
NORTH CAROLINA PROFESSIONAL SEAL 25523 ENGINEER
DocuSigned by:
Brian K. Eason
9AF015AD7ACC48F...

DETAIL OF SHOULDER BERM GUTTER

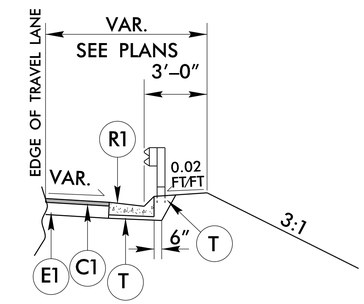

PARTIAL TYPICAL SECTION NO. 1A

USE PARTIAL TYPICAL 1A IN CONJUNCTION WITH TYPICAL 1 AT:

-L- STA. 12+07.50 RT. TO 12+32.50 RT.
-L- STA. 13+02.40 RT. TO 13+27.40 RT.

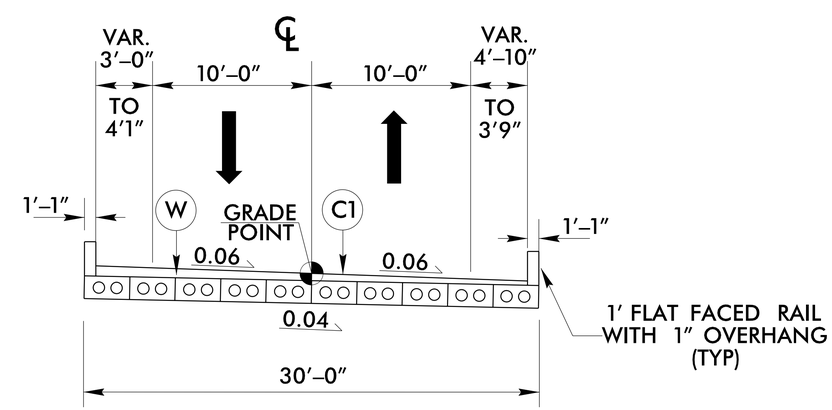

TYPICAL SECTION NO. 2

CORED SLAB BRIDGE OVERLAY

USE TYPICAL SECTION NO. 2

–L– STA. 12+44.50 TO STA. 12+89.52

12/8/2015 10:54:41 AM
U:\PRJ\2004\03131\Roadway\Proj\302384_Rdy_typ.dgn
LOCHNER

COMPUTED BY: BKE (Lochner) DATE: March 26, 2014
CHECKED BY: DWM (Lochner) DATE: December 4, 2015

STATE OF NORTH CAROLINA
DIVISION OF HIGHWAYS

PROJECT REFERENCE NO.	SHEET NO.
17BP.3.R.41	3

LOCHNER
H. W. LOCHNER, INC.
2840 PLAZA PLACE, SUITE 202
RALEIGH, NC 27612
(919) 571–7111
NC License Number F–0159

ECOLOGICAL ENGINEERING
NC FIRM LICENSE No: F-1148
1151 SE Cary Parkway
Suite 101
Cary, NC 27518
(919) 557-0929

RIGHT OF WAY AREA DATA

PARCEL NO.	PROPERTY OWNERS NAMES	TOTAL ACREAGE	AREA TAKEN	AREA REMAINING RT.	AREA REMAINING LT.	CONST. EASE.	PERM. DRAIN. EASE.	TEMP. DRAIN. EASE.
1	James A. and Sharon M. Robinson					539 SF	286 SF	
2	John A. Stallings, Jr.					2,233 SF		

SUMMARY OF EARTHWORK

STATION	STATION	UNCLASSIFIED EXCAVATION CY	EMBANK +% CY	BORROW CY	WASTE CY
–L– 10+25	–L– 12+44.50	4	38	34	
–L– 12+89.52	–L– 15+10	3	118	115	
TOTAL		7	156	149	
SHLD MATERIAL				63	
PROJECT TOTAL		7		212	
EST. 5% TO REPLACE TOP SOIL ON BORROW PIT				11	
GRAND TOTAL		7		223	
SAY		50		300	

SHOULDER BERM GUTTER SUMMARY

SURVEY LINE	STATION	STATION	LENGTH
–L– RT	12+07.30	12+32.30	25.00'
–L– RT	13+02.40	13+27.40	25.00'
TOTAL			50.00'

SUMMARY OF REMOVAL EXISTING ASPHALT PAVEMENT

SURVEY LINE	STATION	STATION	SY
–L–	12+32.52	12+49.25	38
–L–	12+84.60	13+01.53	38
TOTAL			76
	SAY		100

SUB–REGIONAL & REGIONAL LIST OF PIPES, ENDWALLS, ETC. (FOR PIPES 48" & UNDER)

NOTE: Invert Elevations are for Bid Purposes only and shall not be used for project construction stakeout. See "Standard Specifications For Roads and Structures, Section 300–5".

STATION / SIZE / THICKNESS OR GAUGE	LOCATION (LT,RT, OR CL)	STRUCTURE NO. FROM	STRUCTURE NO. TO	TOP ELEVATION	INVERT ELEVATION	INVERT ELEVATION	SLOPE CRITICAL	DRAINAGE PIPE (RCP, CSP, CAAP, HDPE, or PVC) 12"	15"	18"	DO NOT USE RCP	DO NOT USE CSP	DO NOT USE CAAP	DO NOT USE HDPE	DO NOT USE PVC	CLASS III R.C. PIPE (UNLESS OTHERWISE NOTED) 12"	15"	18"	24"	30"	36"	42"	48"	15" SIDE DRAIN PIPE	18" SIDE DRAIN PIPE	24" SIDE DRAIN PIPE	ENDWALLS STD. 838.01, STD. 838.11 OR STD. 838.80 (UNLESS NOTED OTHERWISE) CU. YDS. R.C.P.	C.S.P.	QUANTITIES FOR DRAINAGE STRUCTURES * TOTAL L.F. FOR PAY QUANTITY SHALL BE COL. "A" + (1.3 X COL. "B") PER EACH (0' THRU 5.0')	LIN. *FT. A 5.0' THRU 10.0'	B 10.0' AND ABOVE	C.B. STD. 840.01 OR STD. 840.02	FRAME, GRATES AND HOOD STANDARD 840.03 TYPE OF GRATE E	F	G	GRATES STD. 840.29 G.D.I. FRAME (N.S. FLAT) W2	T.B.D.I. STD. 840.35	REMARKS
–L– 12+23	RT	0401		52.76																									1								1	1	
		0401	OUT		50.01	49.0			16																														* ANCHORS REQUIRED FOR NON–RC PIPE
TOTAL									16																				1								1	1	

ABBREVIATIONS

C.B.	CATCH BASIN
N.D.I.	NARROW DROP INLET
D.I.	DROP INLET
G.D.I.	GRATED DROP INLET
G.D.I. (N.S.)	GRATED DROP INLET (NARROW SLOT)
J.B.	JUNCTION BOX
M.H.	MANHOLE
T.B.D.I.	TRAFFIC BEARING DROP INLET
T.B.J.B.	TRAFFIC BEARING JUNCTION BOX

CENTERLINE COORDINATE LIST

POINT NO.	SURVEY LINE	STATION	NORTHING (Y)	EASTING (X)
1	–L–	10+00.00	369,588.585	2,301,914.562
2	–L–	10+50.00	369,610.436	2,301,959.524
3	–L–	11+00.00	369,629.229	2,302,005.847
4	–L–	11+50.00	369,644.873	2,302,053.327
5	–L–	12+00.00	369,657.298	2,302,101.749
6	–L–	12+50.00	369,666.5044	2,302,150.886
7	–L–	13+00.00	369,672.984	2,302,200.459
8	–L–	13+50.00	369,676.847	2,302,250.303
9	–L–	14+00.00	369,678.083	2,302,300.282
10	–L–	14+50.00	369,676.687	2,302,350.257
11	–L–	15+00.00	369,673.441	2,302,400.151
12	–L–	15+49.24	369,670.177	2,302,449.279

"N" = DISTANCE FROM EDGE OF LANE TO FACE OF GUARDRAIL.
TOTAL SHOULDER WIDTH = DISTANCE FROM EDGE OF TRAVEL LANE TO SHOULDER BREAK POINT.
FLARE LENGTH = DISTANCE FROM LAST SECTION OF PARALLEL GUARDRAIL TO END OF GUARDRAIL.
W = TOTAL WIDTH OF FLARE FROM BEGINNING OF TAPER TO END OF GUARDRAIL.
G = GATING IMPACT ATTENUATOR TYPE 350
NG = NON–GATING IMPACT ATTENUATOR TYPE 350

GUARDRAIL SUMMARY

SURVEY LINE	BEG. STA.	END STA.	LOCATION	LENGTH STRAIGHT	SHOP CURVED	DOUBLE FACED	WARRANT POINT APPROACH END	TRAILING END	"N" DIST. FROM E.O.L.	TOTAL SHOUL. WIDTH	FLARE LENGTH APPROACH END	TRAILING END	W APPROACH END	TRAILING END	ANCHORS XI MOD	XI	GRAU 350	M–350	III	CAT–1	VI MOD	BIC	AT–1	IMPACT ATTENUATOR TYPE 350 EA	G	NG	SINGLE FACED GUARDRAIL	REMOVE EXISTING GUARDRAIL	REMOVE AND STOCKPILE EXISTING GUARDRAIL	REMARKS
–L–	11+69.50	12+44.50 (BEG. BRIDGE)	LT.	75'			12+44.50 (BRIDGE)		3'–0"	6'–0"	50'		1'				1		1											
–L–	12+89.52(END BRIDGE)	13+64.52	LT.	75'				12+89.52 (BRIDGE)	4'–1"	7'–1"		50'		1'			1		1											
–L–	11+69.50	12+44.50 (BEG. BRIDGE)	RT.	75'			12+44.50 (BRIDGE)		4'–10"	7'–10"	50'		1'				1		1											
	12+89.52(END BRIDGE)	13+64.52	RT.	75'				12+89.52 (BRIDGE)	3'–9"	6'–9"		50'		1'			1		1											
TOTAL				300'													4		4											

TOTAL	300'
DEDUCTIONS FOR ANCHOR UNITS	275'
TOTAL	25'

DEDUCTIONS FOR ANCHOR UNITS		
4	TYPE III @ 18.75' EA	75'
4	GRAU 350 @ 50' EA	200'
	TOTAL	275'

ADDITIONAL GUARDRAIL POST = 3 EA.

6/21/00
12/8/2015 8:36:04 AM
H:\GRAPHICS\300384.317\TIP\Roadway\Proj\300384_Rdy_sum.dgn
LOCHNER

DocuSign Envelope ID: FC9CB676-E649-4C41-BFE6-E8E2A3D7D64A

LOCHNER
H. W. LOCHNER, INC.
2840 PLAZA PLACE, SUITE 202
RALEIGH, NC 27612
(919) 571-7111
NC License Number F-0159

ECOLOGICAL ENGINEERING
NC FIRM LICENSE Nec F-1148
1151 SE Cary Parkway
Suite 101
Cary, NC 27518
(919) 557-0929

PROJECT REFERENCE NO.	SHEET NO.
17BP.3.R.41	4
R/W SHEET NO.	

ROADWAY DESIGN ENGINEER
12/8/2015
NORTH CAROLINA PROFESSIONAL SEAL 25523 ENGINEER BRIAN K. EASON
DocuSigned by:
Brian K. Eason
9AF015AD7ACC48F...

HYDRAULICS ENGINEER
12/8/2015
NORTH CAROLINA PROFESSIONAL SEAL 20147 ENGINEER FRANK T. FLEMING
DocuSigned by:
Frank T Fleming
B1DD721AA9FA4A6...

REVISIONS

8/17/99

DATUM DESCRIPTION

THE LOCALIZED COORDINATE SYSTEM DEVELOPED FOR THIS PROJECT IS BASED ON THE STATE PLANE COORDINATES ESTABLISHED BY NCDOT FOR MONUMENT "BL-2"
WITH NAD 83 STATE PLANE GRID COORDINATES OF
NORTHING: 369689.80(ft) EASTING: 2302208.00(ft)
ELEVATION: 53.74(ft)
THE AVERAGE COMBINED GRID FACTOR USED ON THIS PROJECT (GROUND TO GRID) IS: 1.000088148

THE BEARING AND DISTANCE FROM
BL-2 TO STA. 10+00.00 IS
S 70-58-09 W AT 310.40'

ALL LINEAR DIMENSIONS ARE LOCALIZED HORIZONTAL DISTANCES
VERTICAL DATUM USED IS NAVD 88

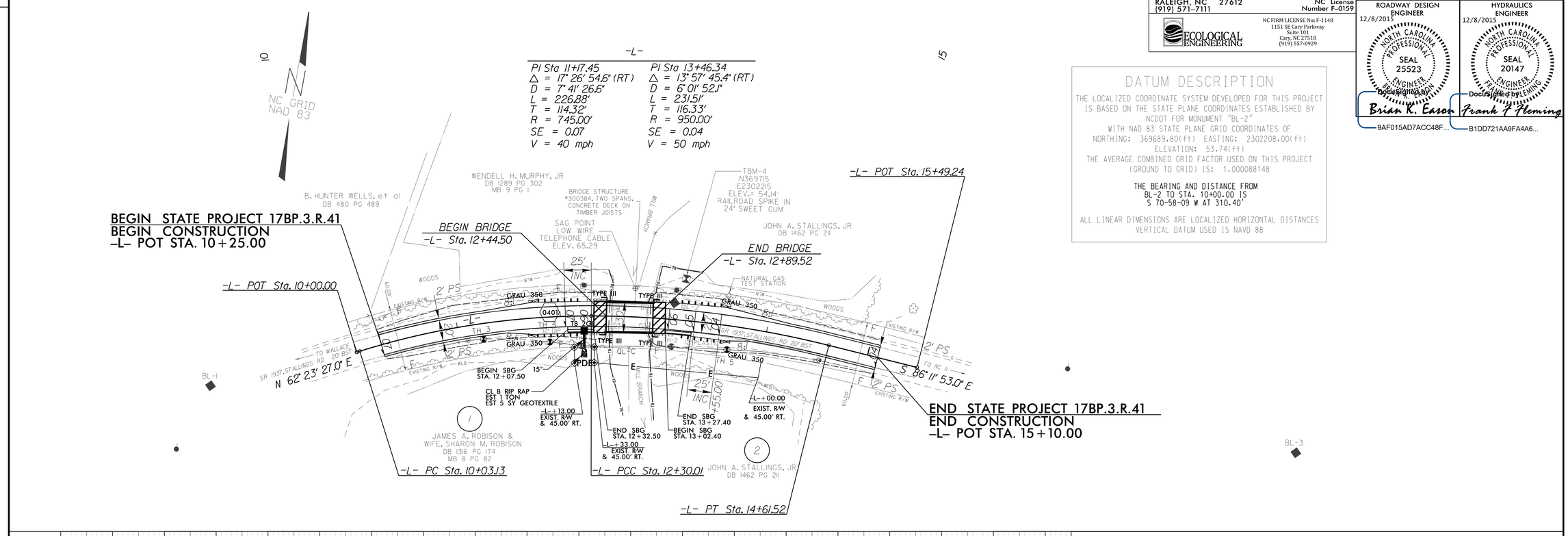

BRIDGE HYDRAULIC DATA

DESIGN DISCHARGE	= 600	CFS
DESIGN FREQUENCY	= 25	YR
DESIGN HW ELEVATION	= 49.2	FT
BASE DISCHARGE	= 900	CFS
BASE FREQUENCY	= 100	YR
BASE HW ELEVATION	= 49.93	FT
OVERTOPPING DISCHARGE	= 2877	CFS
OVERTOPPING FREQUENCY	= 500+	YR
OVERTOPPING ELEVATION	= 53.8	FT
	=	FT
DATE OF SURVEY	= 10/10/2013	
W.S. ELEVATION AT DATE OF SURVEY	= 48.2	FT

TBM-4
N369715
E2302215
ELEV.= 54.14'
RAILROAD SPIKE IN
24" SWEET GUM

BRIDGE/ PAVEMENT RELATIONSHIP SKETCH

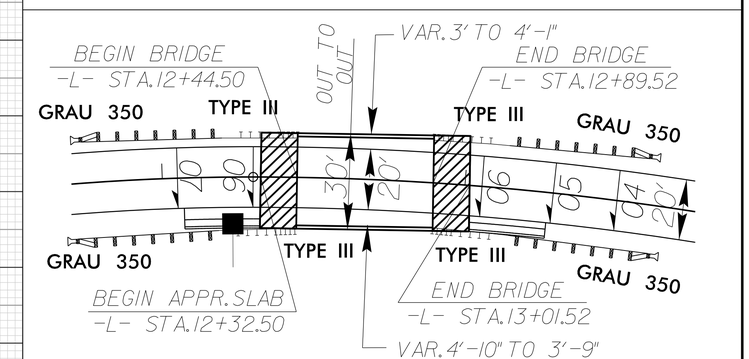

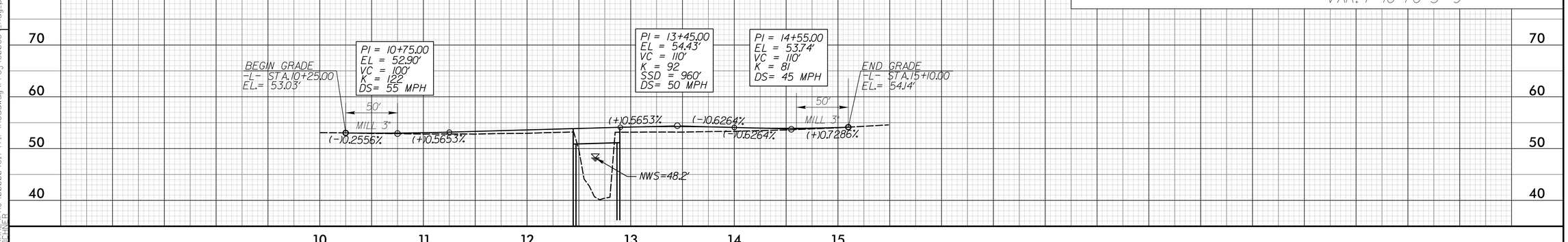

12/8/2015 9:35:43 AM
USER: Brian.Eason
FILE: J:\2020\17\17BP.3.R.41\TIP\Roadway\Proj\300384_Rdy_psh_04.dgn
LOCHNER

DocuSign Envelope ID: 4C303A70-B4D0-445E-B705-0D3A1296A184

STATE OF NORTH CAROLINA
DIVISION OF HIGHWAYS

TRANSPORTATION MANAGEMENT PLAN

DUPLIN COUNTY

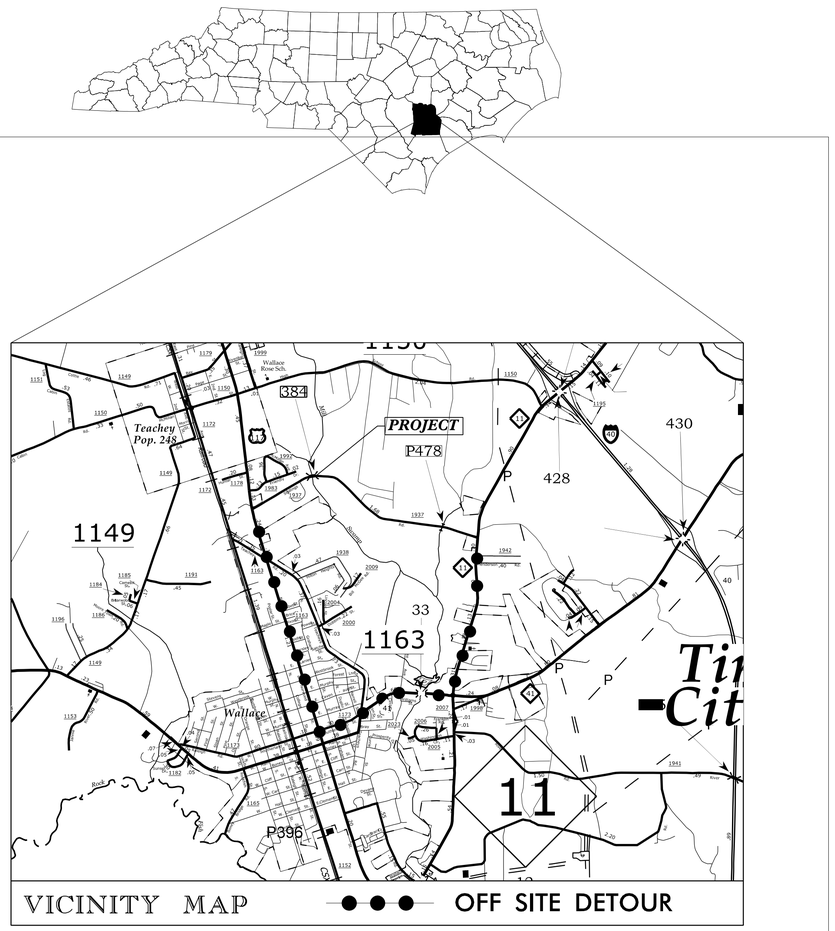

VICINITY MAP ●●● OFF SITE DETOUR

INDEX OF SHEETS

SHEET NO.	TITLE
TMP-1	TITLE SHEET, VICINITY MAP AND INDEX OF SHEETS AND LIST OF APPLICABLE ROADWAY STANDARD DRAWINGS
TMP-1A	PHASING, GENERAL NOTES AND LOCAL NOTES
TMP-2	DETOUR SIGNING
SP-1	SPECIAL SIGN DESIGN

ROADWAY STANDARD DRAWINGS

STD. NO.	TITLE
1101.03	TEMPORARY ROAD CLOSURES
1101.11	TRAFFIC CONTROL DESIGN TABLES
1110.01	STATIONARY WORK ZONE SIGNS
1145.01	BARRICADES
1205.01	PAVEMENT MARKINGS - LINE TYPES & OFFSETS
1205.02	PAVEMENT MARKINGS - 2 LANE & MULTILANE ROADWAYS
1205.12	PAVEMENT MARKINGS - BRIDGES
1250.01	PAVEMENT MARKER SPACING
1251.01	RAISED PAVEMENT MARKERS - (TEMPORARY & PERMANENT)
1261.01	GUARDRAIL AND BARRIER DELINEATION SPACING
1261.02	GUARDRAIL AND BARRIER DELINEATION TYPE
1262.01	GUARDRAIL AND DELINEATION

LOCHNER
H. W. LOCHNER, INC.
2840 PLAZA PLACE, SUITE 202
RALEIGH, NC 27612
(919)571-7111
LICENSE # F-0159

K Smith, PE — QC ENGINEER
B Eason, PE — PROJECT ENGINEER
D Martin — DESIGN ENGINEER / TECHNICIAN

APPROVED: DocuSigned by: Brian K. Eason 9AF015AD7ACC48F...
DATE: 12/10/2015
SEAL — NORTH CAROLINA PROFESSIONAL SEAL 25523 ENGINEER BRIAN K. EASON

WORK ZONE SAFETY & MOBILITY
"from the MOUNTAINS to the COAST"

N.C.D.O.T. WORK ZONE TRAFFIC CONTROL
1561 MAIL SERVICE CENTER (MSC) RALEIGH, NC 27699-1561
750 N. GREENFIELD PARKWAY, GARNER, NC 27529 (DELIVERY)
PHONE: (919) 773-2800 FAX: (919) 771-2745

KATHERINE HITE, PE — DIVISION TRAFFIC ENGINEER

DIVISION OF HIGHWAYS · STATE OF NORTH CAROLINA · DEPARTMENT OF TRANSPORTATION · WORK ZONE TRAFFIC CONTROL

SHEET NO.
TMP-1

17BP.3.R.41

TIP PROJECT:

12/8/2015 10:12:03 AM
I:\RAL\PRJ\0000093I7\TIP\Traffic\TrafficControl\TCP\300384_TCP_TSH.dgn
LOCHNER

DocuSign Envelope ID: 4C303A70-B4D0-445E-B705-0D3A1296A184

PROJ. REFERENCE NO.	SHEET NO.
17BP.3.R.41	TMP-1A

PHASING

PHASE I

PRIOR TO ANY CONSTRUCTION OPERATIONS, INSTALL AND COVER DETOUR SIGNS AS SHOWN ON TMP-2 AND IN ACCORDANCE WITH ROADWAY STANDARD DRAWING 1101.03 SHEET 1 OF 9. DO NOT INSTALL ADVANCE WARNING SIGNS MORE THAN 3 DAYS PRIOR TO BEGINNING OF WORK UNLESS COVERED.

PHASE II

INSTALL BARRICADES AND UNCOVER DETOUR SIGNS. CLOSE -L- (SR 1937 /STALLINGS RD.) TO TRAFFIC AS SHOWN ON TMP-2. CONSTRUCT BRIDGE, APPROACHES, AND ROADWAY UP TO AND INCLUDING THE FINAL LAYER OF SURFACE COURSE.

PHASE III

UPON COMPLETION OF BRIDGE, APPROACHES AND ROADWAY, PLACE FINAL PAVEMENT MARKINGS AND MARKERS IN ACCORDANCE WITH ROADWAY STANDARD DRAWINGS. REMOVE ALL ROAD CLOSURE SIGNS AND BARRICADES AND OPEN -L- (SR 1937 /STALLINGS RD.) TO THROUGH TRAFFIC.

GENERAL NOTES

CHANGES MAY BE REQUIRED WHEN PHYSICAL DIMENSIONS IN THE DETAIL DRAWINGS, STANDARD DETAILS, AND ROADWAY DETAILS ARE NOT ATTAINABLE TO MEET FIELD CONDITIONS OR RESULT IN DUPLICATE OR UNDESRIED OVERLAPING OF DEVICES. MODIFICATION MAY INCLUDE: MOVING, SUPPLEMENTING, COVERING, OR REMOVAL OF DEVICES AS DIRECTED BY THE ENGINEER.

THE FOLLOWING GENERAL NOTES APPLY AT ALL TIMES FOR THE DURATION OF THE CONSTRUCTION PROJECT EXCEPT WHEN OTHERWISE NOTED IN THE PLAN OR DIRECTED BY THE ENGINEER.

TRAFFIC PATTERN ALTERATIONS

A) NOTIFY THE ENGINEER TWENTY ONE (21) CALENDAR DAYS PRIOR TO ANY TRAFFIC PATTERN ALTERATION.

SIGNING

B) INSTALL ADVANCE WORK ZONE WARNING SIGNS WHEN WORK IS WITHIN 40 FT FROM THE EDGE OF TRAVEL LANE AND NO MORE THAN THREE (3) DAYS PRIOR TO THE BEGINNING OF CONSTRUCTION.

C) PROVIDE SIGNING AND DEVICES REQUIRED TO CLOSE THE ROAD ACCORDING TO THE ROADWAY STANDARD DRAWINGS AND TRAFFIC CONTROL PLANS.

PROVIDE SIGNING REQUIRED FOR THE OFF-SITE DETOUR ROUTE AS SHOWN ON SHEET TMP-2.

D) COVER OR REMOVE ALL SIGNS AND DEVICES REQUIRED TO CLOSE THE ROAD WHEN ROAD CLOSURE IS NOT IN OPERATION.

COVER OR REMOVE ALL SIGNS REQUIRED FOR THE OFF-SITE DETOUR WHEN THE DETOUR IS NOT IN OPERATION.

E) ENSURE ALL NECESSARY SIGNING IS IN PLACE PRIOR TO ALTERING ANY TRAFFIC PATTERN.

TRAFFIC CONTROL DEVICES

F) PLACE TYPE III BARRICADES, WITH "ROAD CLOSED" SIGN R11-2 ATTACHED, OF SUFFICIENT LENGTH TO CLOSE ENTIRE ROADWAY.

PAVEMENT MARKINGS AND MARKERS

G) INSTALL PAVEMENT MARKINGS ON THE FINAL SURFACE AS FOLLOWS:

ROAD NAME	MARKING	MARKER
STALLINGS ROAD	PAINT	RAISED

H) TIE PROPOSED PAVEMENT MARKING LINES TO EXISTING PAVEMENT MARKING LINES.

I) REMOVE/REPLACE ANY CONFLICTING/DAMAGED PAVEMENT MARKINGS AND MARKERS BY THE END OF EACH DAY'S OPERATION.

J) PHASING ZONE WILL BE DETERMINED IN THE FIELD AND MUST BE APPROVED BY THE ENGINEER.

APPROVED: DocuSigned by: Brian K. Eason DATE: 12/10/2015
9AF015AD7A6C48E...

SEAL

NORTH CAROLINA PROFESSIONAL SEAL 25523 ENGINEER BRIAN K. EASON

DIVISION OF HIGHWAYS STATE OF NORTH CAROLINA DEPARTMENT OF TRANSPORTATION WORK ZONE TRAFFIC CONTROL

TRANSPORTATION OPERATION PLAN

12/8/2015 11:34:10 AM
I:\RALPRJ\000009317\TIP\Traffic\TrafficControl\TCP\300384_TCP_1A.dgn
LOCHNER

DocuSign Envelope ID: 4C303A70-B4D0-445E-B705-0D3A1296A184

PROJ. REFERENCE NO.	SHEET NO.
17BP.3.R.41	TMP-2

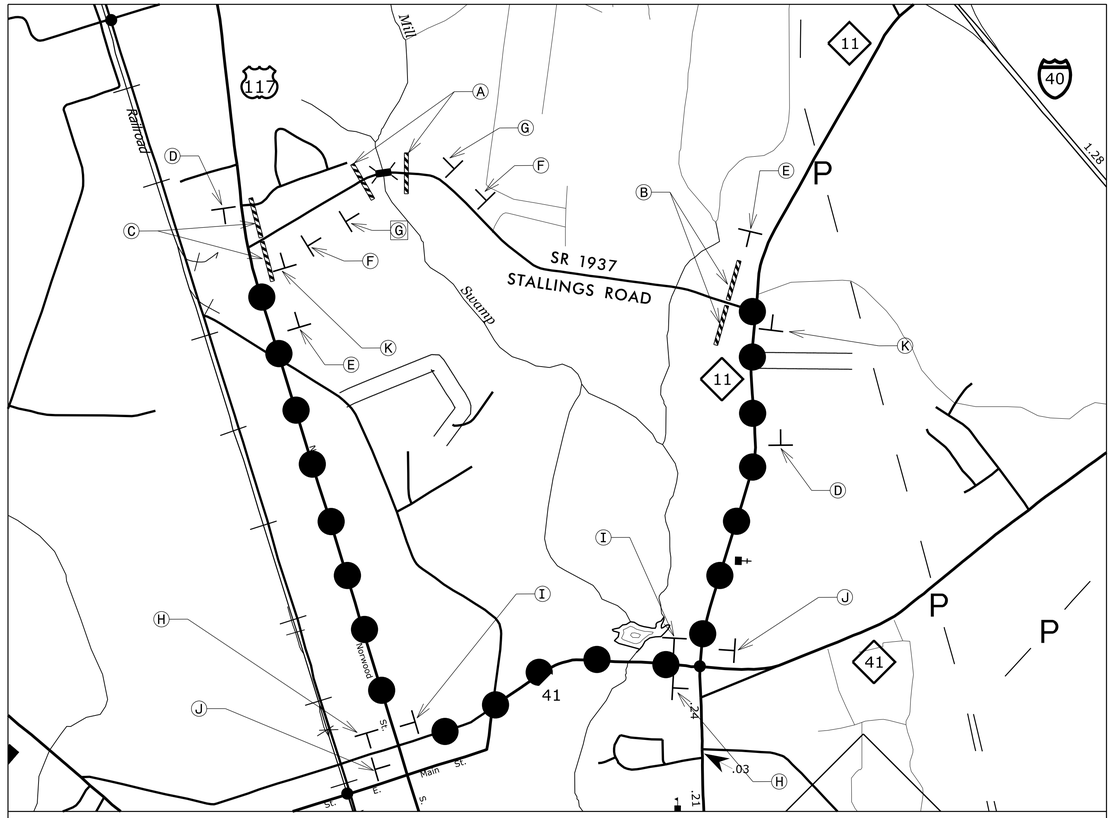

VICINITY MAP ●●● OFF SITE DETOUR

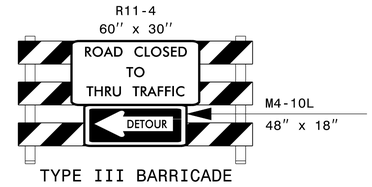

TYPE III BARRICADE

B

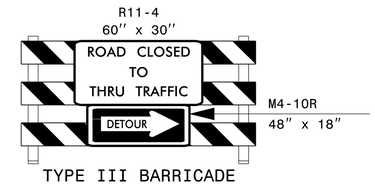

TYPE III BARRICADE

C

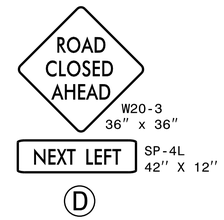

D

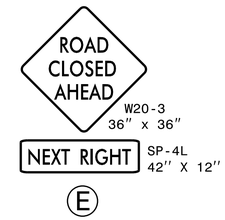

E

F

G

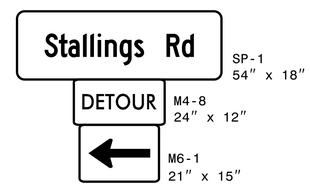

H

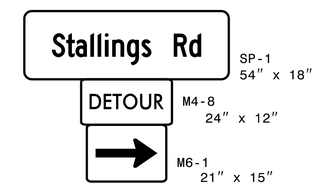

I

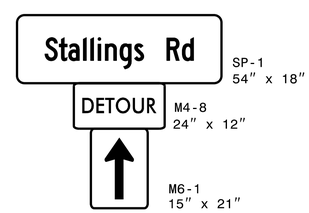

J

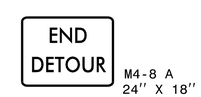

K

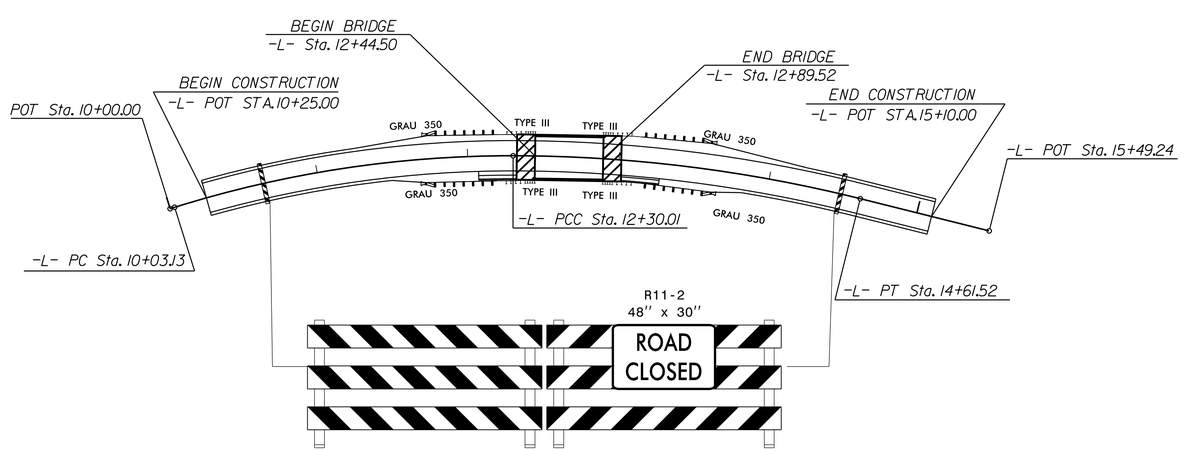

TYPE III BARRICADE(S)

A

APPROVED: DocuSigned by: Brian K. Eason 9AF015AD7A6C48F... DATE: 12/10/2015

SEAL

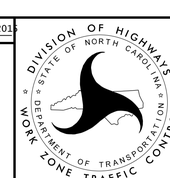

DETOUR SIGNING

12/3/2015
R:\Traffic\TrafficControl\TCP\300384_TCP_2.dgn
LOCINER

DocuSign Envelope ID: 4C303A70-B4D0-445E-B705-0D3A1296A184

PROJ. REFERENCE NO.	SHEET NO.
17BP.3.R.41	SP-1

SIGN NUMBER: SP-1
TYPE: STATIONARY
QUANTITY: SEE PLANS

SIGN WIDTH: 4′-6″
HEIGHT: 1′-6″
TOTAL AREA: 6.75 Sq.Ft.

BORDER TYPE: FLUSH
RECESS: 0.47″
WIDTH: 0.63″
RADII: 1.5″

NO. Z BARS:
LENGTH:

BACKG COLOR: Fluorescent Orange
COPY COLOR: Black

SYMBOL	X	Y	WID	HT

MAT′L: 0.080″ (2.0 mm) ALUMINUM

DESIGN BY: C. YOKELEY
PROJECT ID: 17BP.3.R.41

CHECKED BY: B. DEHLER
DIV: 3

DATE:September 1, 2015

USE NOTES: 1,2

1. Legend and border shall be direct applied black non-reflective sheeting.
2. Background shall be NC GRADE B fluoresent orange retroreflective sheeting.

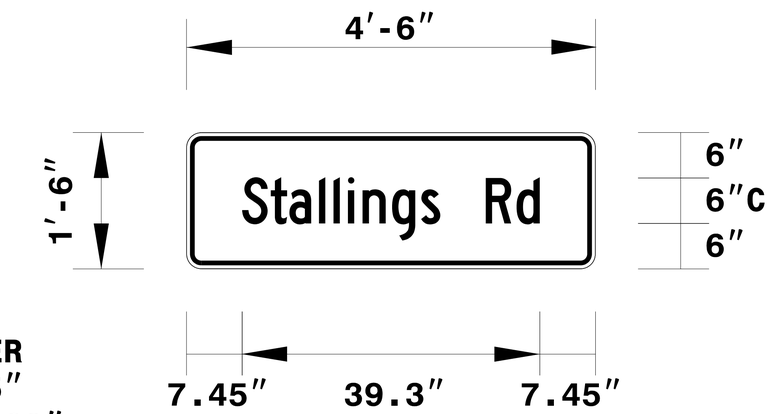

BORDER
R=1.5″
TH=0.63″
IN=0.47″

Spacing Factor is 1 unless specified otherwise

LETTER POSITIONS

Letter locations are panel edge to lower left corner

Series/Size
Text Length

S	t	a	l	l	i	n	g	s		R	d																C 2000
7.4	11.1	13.6	17.5	19.4	21.3	23.3	27.2	31	33.5	39.5	43.6																39.3

FILENAME: STALLINGS RD

NORTH CAROLINA D.O.T. SIGN DETAIL

APPROVED: DocuSigned by: Brian K. Eason DATE: 12/10/2015
9AF015AD7ACC48F...

SEAL

NORTH CAROLINA PROFESSIONAL SEAL 25523 ENGINEER BRIAN K. EASON

DIVISION OF HIGHWAYS · STATE OF NORTH CAROLINA · DEPARTMENT OF TRANSPORTATION · WORK ZONE TRAFFIC CONTROL

SPECIAL SIGN DESIGN

01-SEP-2015 14:48
R:\RAL\PROJ\0000093I7\TIP\Traffic\Signing\CADD\Sign Designs\R.36_TC_PSH_SP-1.dgn
$$$$USERNAME$$$$

TIP PROJECT: 17BP.3.R.41

RELEASE FOR CONSTRUCTION

DATE: _____

STATE	STATE PROJECT REFERENCE NO.	SHEET NO.	TOTAL SHEETS
N.C.	17BP.3.R.41	EC-1	

STATE PROJ. NO.	F.A. PROJ. NO.	DESCRIPTION
17BP.3.R.41		CONST

STATE OF NORTH CAROLINA
DIVISION OF HIGHWAYS

PLAN FOR PROPOSED
HIGHWAY EROSION CONTROL

DUPLIN COUNTY

LOCATION: BRIDGE NO. 384 OVER MILL SWAMP ON SR 1937 (STALLINGS RD.) OVER RUN OF OF THE MILL SWAMP

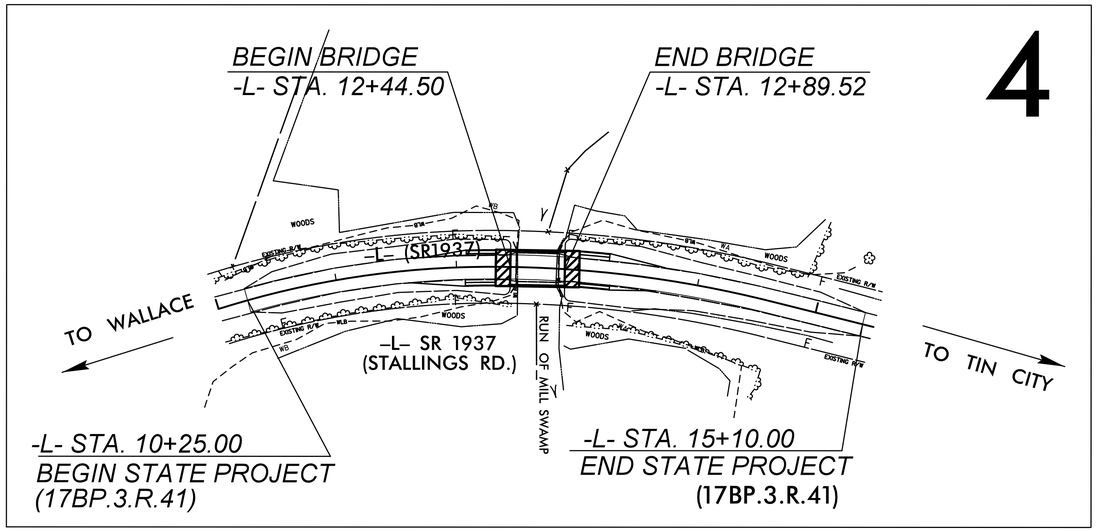

EROSION AND SEDIMENT CONTROL MEASURES

Std. #	Description	Symbol
1630.03	Temporary Silt Ditch	TSD
1630.05	Temporary Diversion	TD
1605.01	Temporary Silt Fence	
1606.01	Special Sediment Control Fence	
1622.01	Temporary Berms and Slope Drains	
1630.02	Silt Basin Type B	
1633.01	Temporary Rock Silt Check Type-A	
	Temporary Rock Silt Check Type-A with Matting and Polyacrylamide (PAM)	
1633.02	Temporary Rock Silt Check Type-B	
	Wattle / Coir Fiber Wattle	EW CFW
	Wattle / Coir Fiber Wattle with Polyacrylamide (PAM)	
1634.01	Temporary Rock Sediment Dam Type-A	
1634.02	Temporary Rock Sediment Dam Type-B	
1635.01	Rock Pipe Inlet Sediment Trap Type-A	
1635.02	Rock Pipe Inlet Sediment Trap Type-B	
1630.04	Stilling Basin	
1630.06	Special Stilling Basin	
	Rock Inlet Sediment Trap:	
1632.01	Type A	A
1632.02	Type B	B
1632.03	Type C	C
	Skimmer Basin	
	Tiered Skimmer Basin	
	Infiltration Basin	

REID ROBOL, EI
LEVEL III NAME

3409
LEVEL III CERTIFICATION NO.

GRAPHIC SCALE

0
PLANS

0
PROFILE (HORIZONTAL)

0
PROFILE (VERTICAL)

ROADSIDE ENVIRONMENTAL UNIT
DIVISION OF HIGHWAYS
STATE OF NORTH CAROLINA

THESE EROSION AND SEDIMENT CONTROL PLANS COMPLY WITH THE REGULATIONS SET FORTH BY THE NCG-010000 GENERAL CONSTRUCTION PERMIT EFFECTIVE AUGUST 3, 2011 ISSUED BY THE NORTH CAROLINA DEPARTMENT OF ENVIRONMENT AND NATURAL RESOURCES DIVISION OF WATER QUALITY.

Prepared In the Office of:

ROADSIDE ENVIRONMENTAL UNIT

1 South Wilmington St.
Raleigh, NC 27611

2012 STANDARD SPECIFICATIONS

Roadway Standard Drawings

The following roadway english standards as appear in "Roadway Standard Drawings"– Roadway Design Unit – N. C. Department of Transportation – Raleigh, N. C., dated January 2012 and the latest revison thereto are applicable to this project and by reference hereby are considered a part of these plans.

1604.01	Railroad Erosion Control Detail	1632.01	Rock Inlet Sediment Trap Type A
1605.01	Temporary Silt Fence	1632.02	Rock Inlet Sediment Trap Type B
1606.01	Special Sediment Control Fence	1632.03	Rock Inlet Sediment Trap Type C
1607.01	Gravel Construction Entrance	1633.01	Temporary Rock Silt Check Type A
1622.01	Temporary Berms and Slope Drains	1633.02	Temporary Rock Silt Check Type B
1630.01	Riser Basin	1634.01	Temporary Rock Sediment Dam Type A
1630.02	Silt Basin Type B	1634.02	Temporary Rock Sediment Dam Type B
1630.03	Temporary Silt Ditch	1635.01	Rock Pipe Inlet Sediment Trap Type A
1630.04	Stilling Basin	1635.02	Rock Pipe Inlet Sediment Trap Type B
1630.05	Temporary Diversion	1640.01	Coir Fiber Baffle
1630.06	Special Stilling Basin	1645.01	Temporary Stream Crossing
1631.01	Matting Installation		

8:21:43 AM
R:\Environmental\Design\384_REIL.tah.dgn

PROJECT REFERENCE NO.	SHEET NO.
17BP.6.R.40	EC-2
R/W SHEET NO.	
ROADWAY DESIGN ENGINEER	HYDRAULICS ENGINEER

SILT FENCE COIR FIBER WATTLE BREAK DETAIL

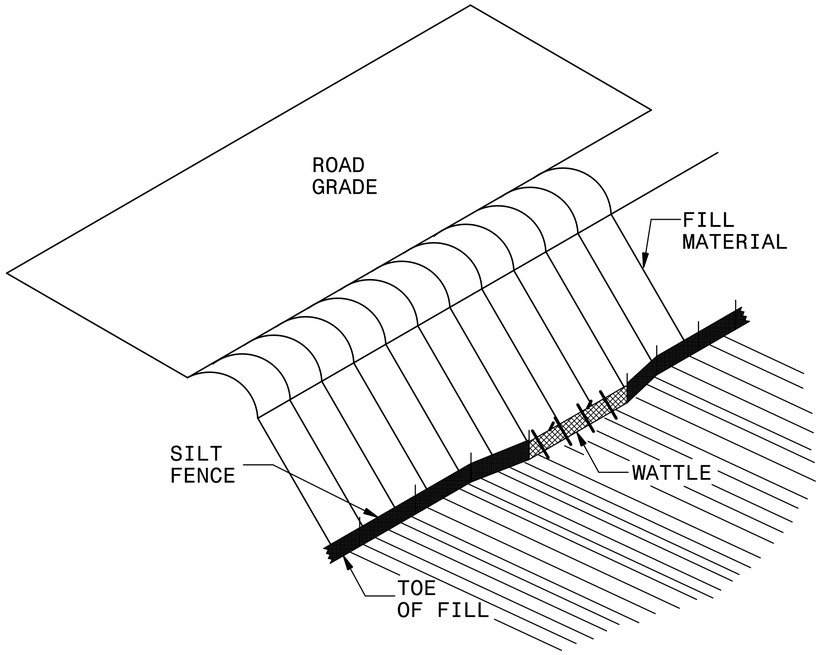

ISOMETRIC VIEW

NOTES:

USE MINIMUM 12 IN. DIAMETER COIR FIBER (COCONUT FIBER) WATTLE AND LENGTH OF 10 FT.

EXCAVATE A 1 TO 2 INCH TRENCH FOR WATTLE TO BE PLACED.

DO NOT PLACE WATTLE ON TOE OF SLOPE.

USE 2 FT. WOODEN STAKES WITH A 2 IN. BY 2 IN. NOMINAL CROSS SECTION.

INSTALL A MINIMUM OF 2 UPSLOPE STAKES AND 4 DOWNSLOPE STAKES AT AN ANGLE TO WEDGE WATTLE TO GROUND.

PROVIDE STAPLES MADE OF 0.125 IN. DIAMETER STEEL WIRE FORMED INTO A U SHAPE NOT LESS THAN 12″ IN LENGTH.

INSTALL STAPLES APPROXIMATELY EVERY 1 LINEAR FOOT ON BOTH SIDES OF WATTLE AND AT EACH END TO SECURE IT TO THE SOIL.

WATTLE INSTALLATION CAN BE ON OUTSIDE OF THE SILT FENCE AS DIRECTED.

INSTALL TEMPORARY SILT FENCE IN ACCORDANCE WITH SECTION 1605 OF THE STANDARD SPECIFICATIONS.

INSET A

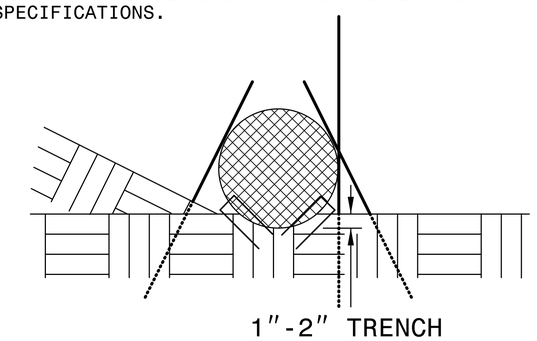

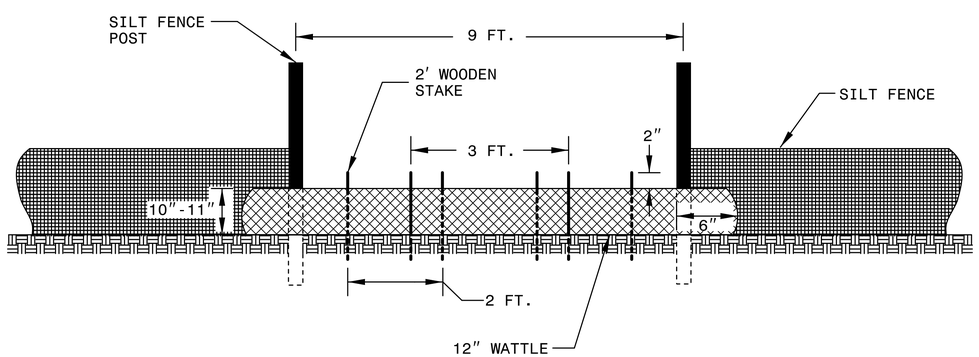

VIEW FROM SLOPE

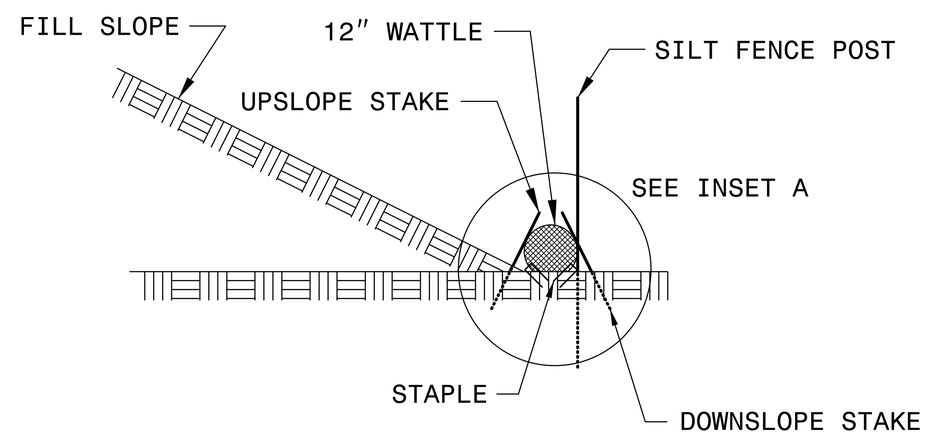

SIDE VIEW

PROJECT REFERENCE NO.	SHEET NO.
17BP.3.R.41	EC-3
ROADWAY DESIGN ENGINEER	HYDRAULICS ENGINEER

DIVISION OF HIGHWAYS
STATE OF NORTH CAROLINA

SOIL STABILIZATION TIMEFRAMES

SITE DESCRIPTION	STABILIZATION TIME	TIMEFRAME EXCEPTIONS
PERIMETER DIKES, SWALES, DITCHES AND SLOPES	7 DAYS	NONE
HIGH QUALITY WATER (HQW) ZONES	7 DAYS	NONE
SLOPES STEEPER THAN 3:1	7 DAYS	IF SLOPES ARE 10' OR LESS IN LENGTH AND ARE NOT STEEPER THAN 2:1, 14 DAYS ARE ALLOWED.
SLOPES 3:1 OR FLATTER	14 DAYS	7 DAYS FOR SLOPES GREATER THAN 50' IN LENGTH.
ALL OTHER AREAS WITH SLOPES FLATTER THAN 4:1	14 DAYS	NONE, EXCEPT FOR PERIMETERS AND HQW ZONES.

PROJECT REFERENCE NO.	SHEET NO.
17BP.3.R.41	EC-04/CONST.04
R/W SHEET NO.	
ROADWAY DESIGN ENGINEER	HYDRAULICS ENGINEER

Prepared in the Office of: ECOLOGICAL ENGINEERING

NC FIRM LICENSE No: F-948
851-SE Cary Parkway
Suite 101
Cary, NC 27518
(919) 557-0929

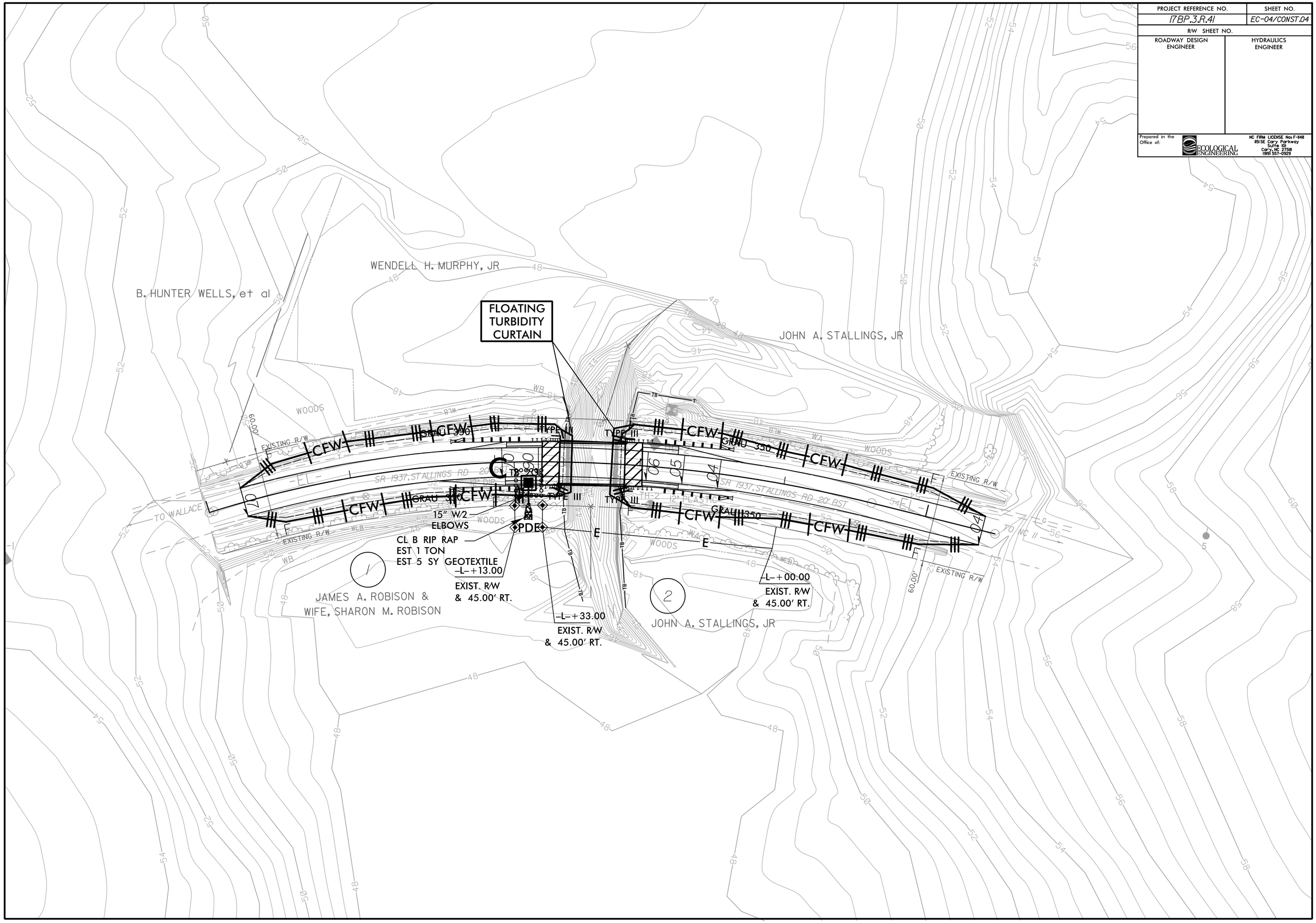

09/08/99

PROJECT: 17BP.3.R.41

See Sheet 1-A For Index of Sheets
See Sheet 1-B For Conventional Symbols

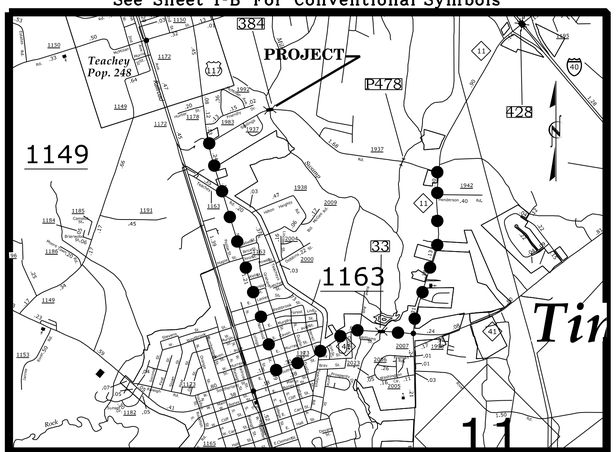

VICINITY MAP — OFF SITE DETOUR

STATE OF NORTH CAROLINA
DIVISION OF HIGHWAYS

DUPLIN COUNTY

LOCATION: BRIDGE NO. 384 OVER MILL BRANCH ON SR 1937 (STALLINGS RD.)

TYPE OF WORK: GRADING, DRAINAGE, PAVING, & STRUCTURE

UTILITIES BY OTHERS

STATE	STATE PROJECT REFERENCE NO.	SHEET NO.	TOTAL SHEETS
N.C.	17BP.3.R.41	UO-1	

STATE PROJ. NO.	F.A. PROJ. NO.	DESCRIPTION
17BP.3.R.41		PE,R/W,CONST

NC GRID
NAD 83\11

UO–2

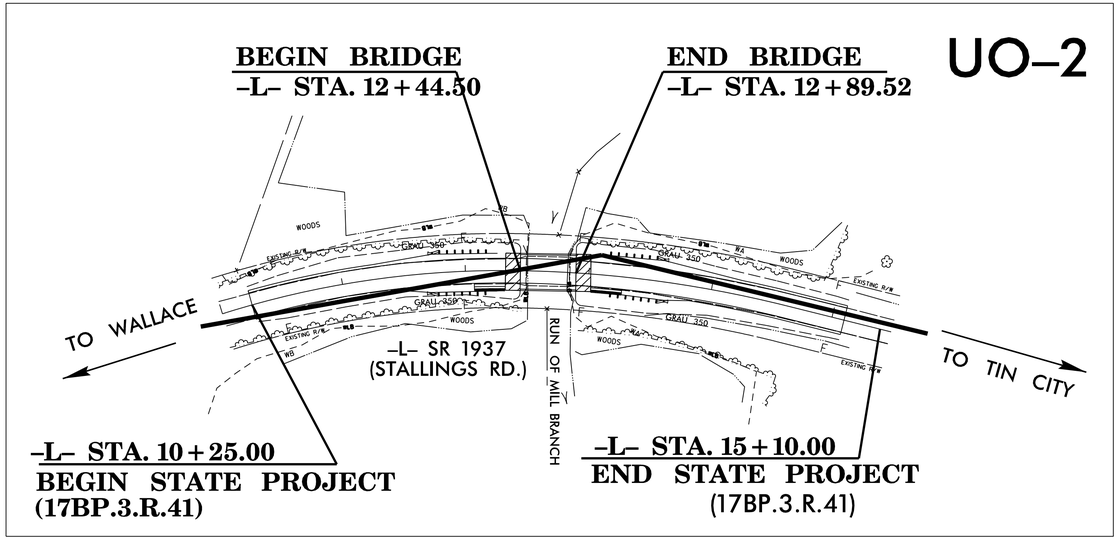

SO-DEEP US, P.C.
The Subsurface Utility Engineering Company
4650 Paragon Park Road, Raleigh, NC 27616 (919) 878-7466

* DESIGN EXCEPTION FOR HORIZONTAL ALIGNMENT AND STOPPING SIGHT DISTANCE REQUIRED

CONTRACT:

GRAPHIC SCALES

50′ 25′ 0 50′ 100′
PLANS

50′ 25′ 0 50′ 100′
PROFILE (HORIZONTAL)

10′ 5′ 0 10′ 20′
PROFILE (VERTICAL)

INDEX OF SHEETS

SHEET NO.	DESCRIPTION
UO–1	TITLE SHEET
UO–2	UBO PLAN SHEETS

UTILITY OWNERS ON PROJECT

(A) PIEDMONT NATURAL GAS – GAS (DISTRIBUTION)
(B) CENTURYLINK – COMMUNICATIONS

Prepared in the Office of:

LOCHNER
H. W. LOCHNER, INC.
2840 PLAZA PLACE, SUITE 202
RALEIGH, NC 27612
NC License Number F-0159

ECOLOGICAL ENGINEERING
NC FIRM LICENSE No: F-1148
1151 SE Cary Parkway
Suite 101
Cary, NC 27518
(919) 557-0929

2012 STANDARD SPECIFICATIONS

RIGHT OF WAY DATE:
MARCH 31, 2014

LETTING DATE:
FEB 4, 2016

BRIAN K. EASON, PE
PROJECT ENGINEER

DAVID W. MARTIN
PROJECT DESIGN ENGINEER

AMANDA GLYNN, PE
NCDOT CONTACT

HYDRAULICS ENGINEER
SIGNATURE: P.E.

ROADWAY DESIGN ENGINEER
SIGNATURE: P.E.

STATE OF NORTH CAROLINA DEPARTMENT OF TRANSPORTATION

8/17/99

PROJECT REFERENCE NO.	SHEET NO.
17BP.3.R.41	U0-2
R/W SHEET NO.	
ROADWAY DESIGN ENGINEER	HYDRAULICS ENGINEER

BRIDGE IS SUPER-ELEVATED

DECK ELEVATIONS	BRIDGE SEAT ELEVATIONS
D1= 54.21	BS1= 52.84
D2= 52.27	BS2= 50.82
D3= 52.26	BS3= 50.80
D4= 54.20	BS4= 52.82

NC GRID NAD 83

-L-

PI Sta 11+17.45	PI Sta 13+46.34
Δ = 17° 26' 54.6" (RT)	Δ = 13° 57' 45.4" (RT)
D = 7° 41' 26.6"	D = 6° 01' 52.1"
L = 226.88'	L = 231.51'
T = 114.32'	T = 116.33'
R = 745.00'	R = 950.00'

DATUM DESCRIPTION

THE LOCALIZED COORDINATE SYSTEM DEVELOPED FOR THIS PROJECT IS BASED ON THE STATE PLANE COORDINATES ESTABLISHED BY NCDOT FOR MONUMENT "BL-2"
WITH NAD 83 STATE PLANE GRID COORDINATES OF
NORTHING: 369689.80(//m) EASTING: 2302208.00(//m)
ELEVATION: 53.74(//m)
THE AVERAGE COMBINED GRID FACTOR USED ON THIS PROJECT (GROUND TO GRID) IS: 1.000088148

ALL LINEAR DIMENSIONS ARE LOCALIZED HORIZONTAL DISTANCES
VERTICAL DATUM USED IS NAVD 88

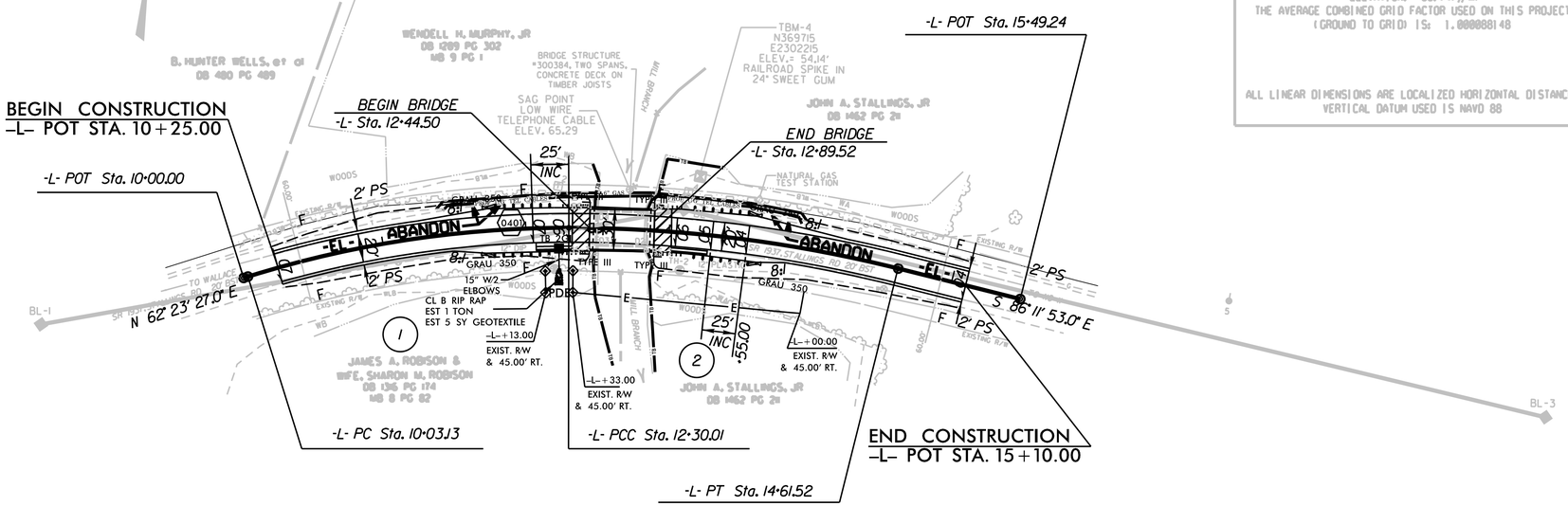

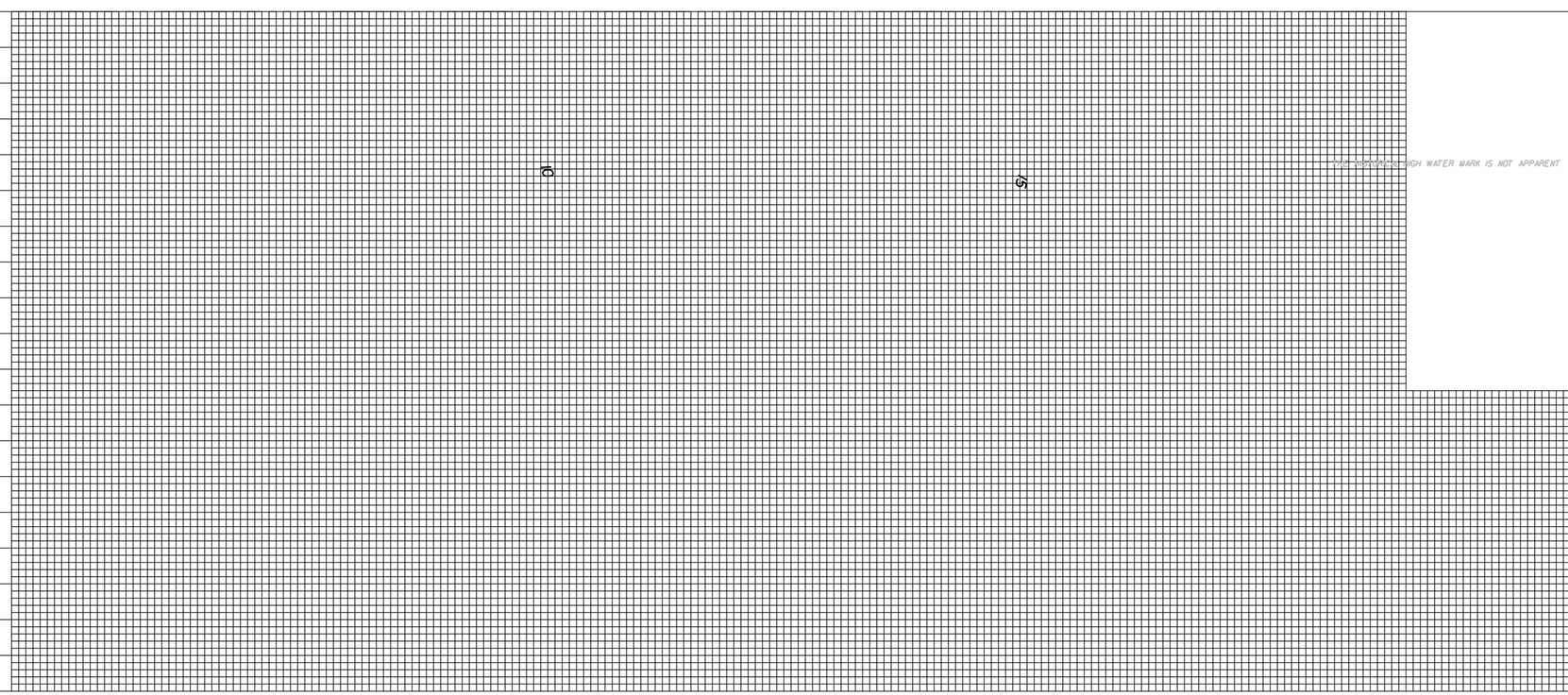

PROJ. REFERENCE NO.		SHEET NO.
17BP.3.R.41		X-A

STATE OF NORTH CAROLINA
DIVISION OF HIGHWAYS

NOTE: EMBANKMENT COLUMN INCLUDES BACKFILL FOR UNDERCUT

CROSS-SECTION SUMMARY

Station L	Uncl. Exc. (cu. yd.)	Embt (cu. yd.)
10+50.00	0	0
11+00.00	3	6
11+50.00	1	9
12+00.00	0	15

Station L	Uncl. Exc. (cu. yd.)	Embt (cu. yd.)
13+00.00	0	0
13+50.00	0	43
14+00.00	0	33
14+50.00	1	12
15+00.00	2	6

Quantities are approximate only. The Resident Engineer will recross-section the work accurately when the project is staked out. These cross-section notes will be used in computing the final quantities for which the contractor will be paid.

Approximate quantities only. Unclassified excavation, borrow excavation, shoulder borrow, fine grading, clearing and grubbing, breaking of existing pavement and removal of existing pavement will be paid for at the lump sum price for "Grading".

0 2.5 5	PROJ. REFERENCE NO.	SHEET NO.
	17BP.3.R.41	X-1

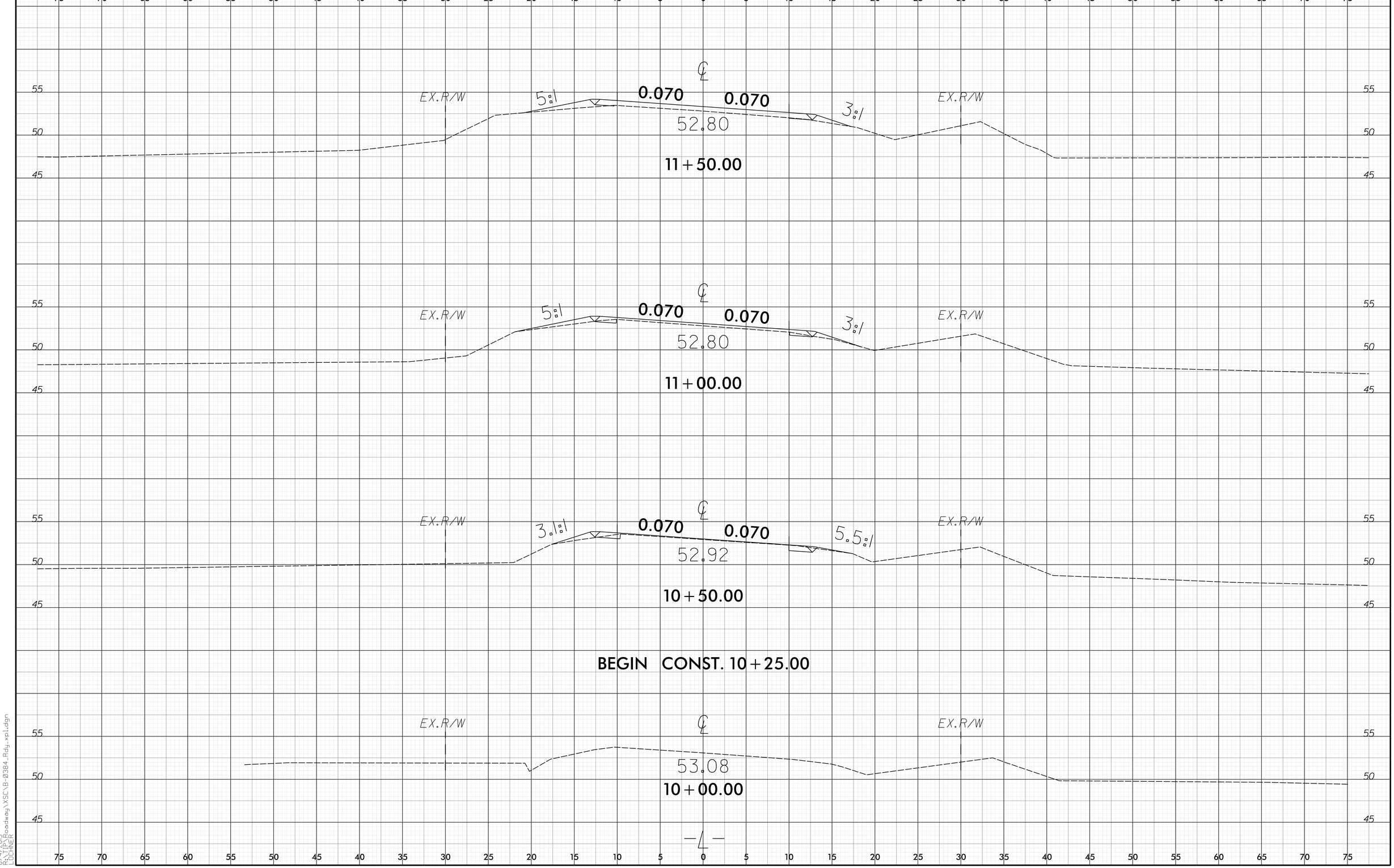

8/23/99

8/4/2015
R:\TIP\Roadway\XSC\B-0384_Rdy_xpl.dgn
LOCHNER

PROJ. REFERENCE NO.	SHEET NO.
17BP.3.R.41	X-2

0 2.5 5

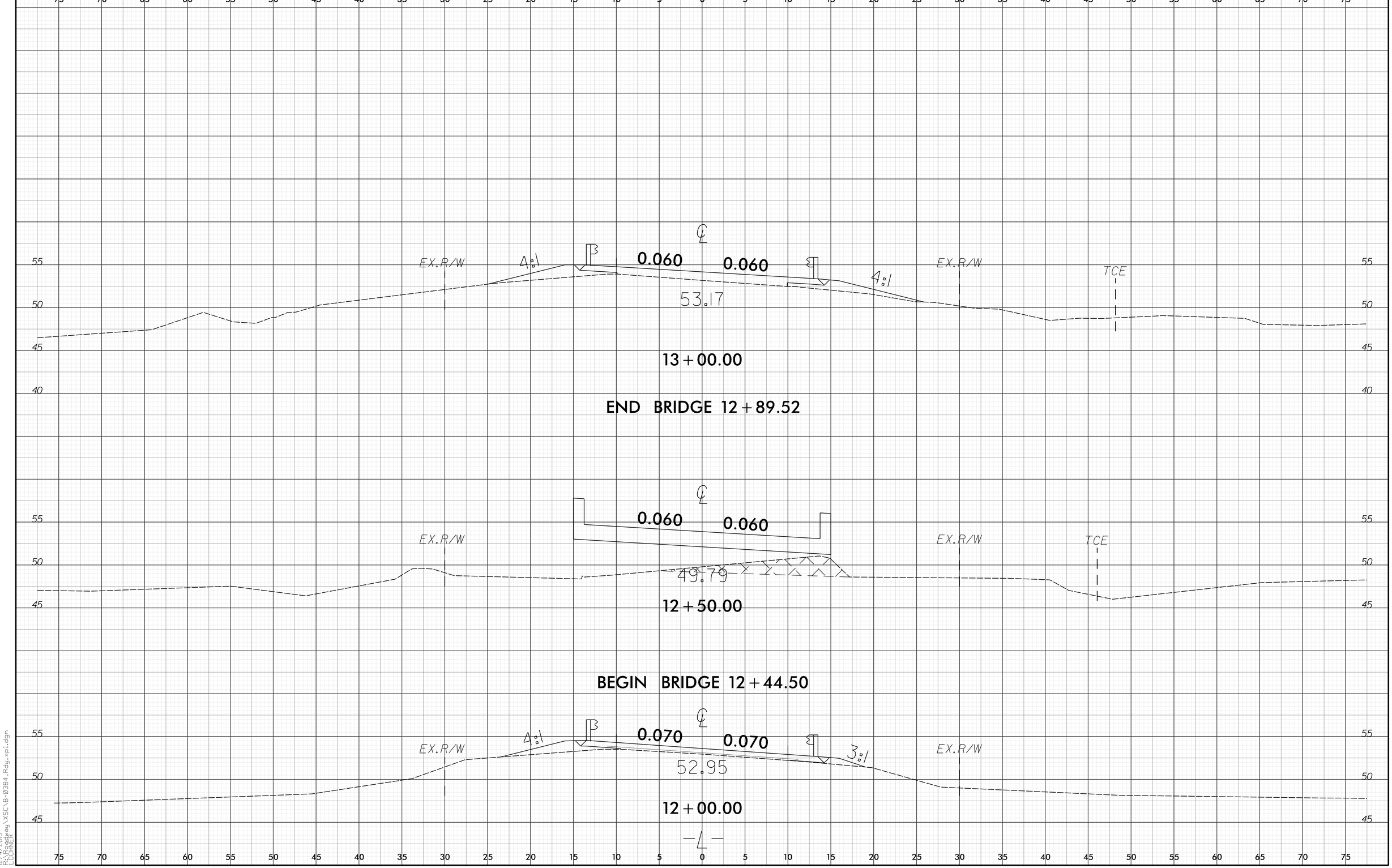

8/23/99

12/4/2015
R:\Roadway\XSC\B-0384_Rdy_xpl.dgn
LOCHNER

0 2.5 5	PROJ. REFERENCE NO.	SHEET NO.
	17BP.3.R.41	X-3

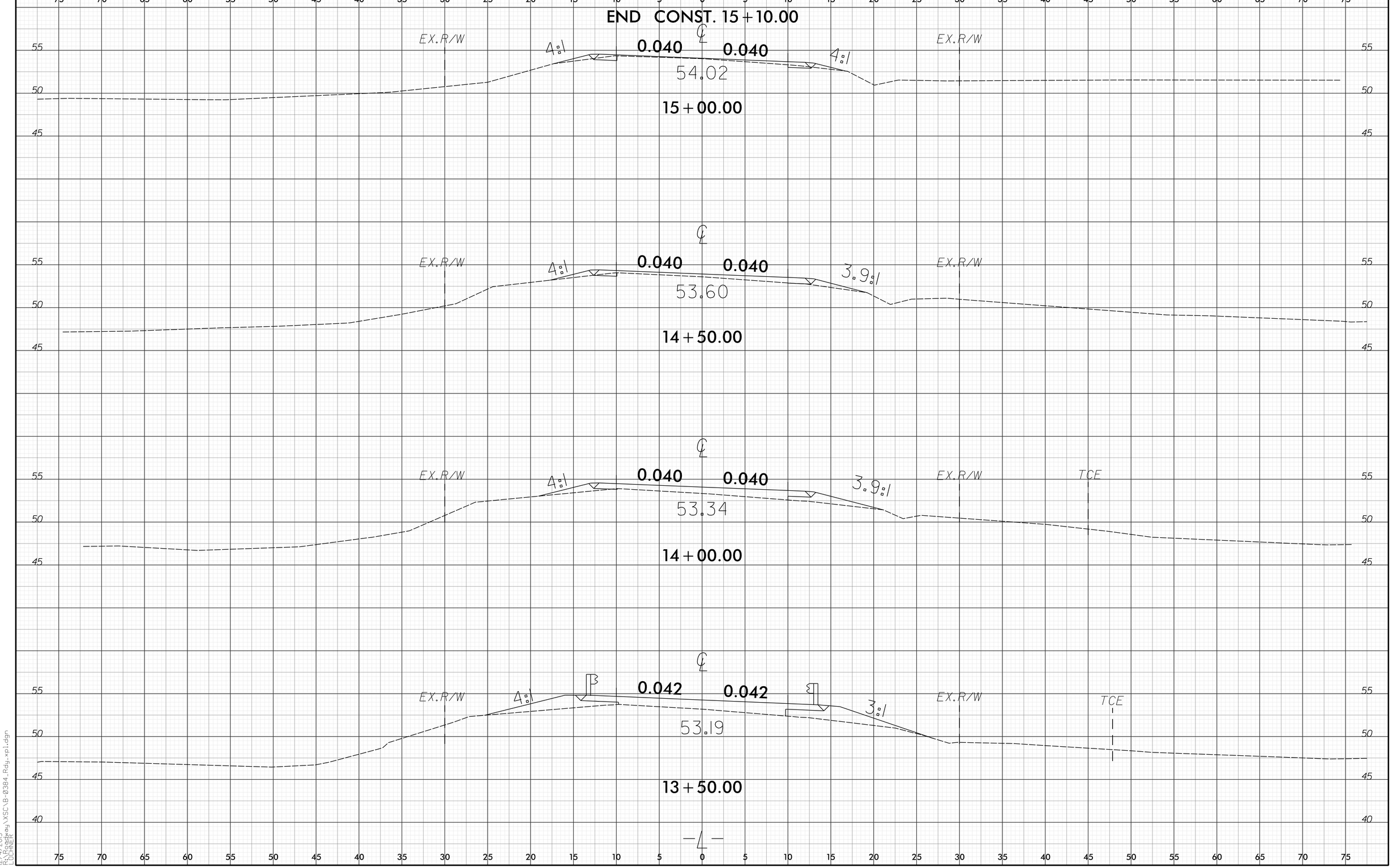

8/23/99

12/4/2015
R:\Roadway\XSC\B-0384_Rdy_xpl.dgn
LOCHNER

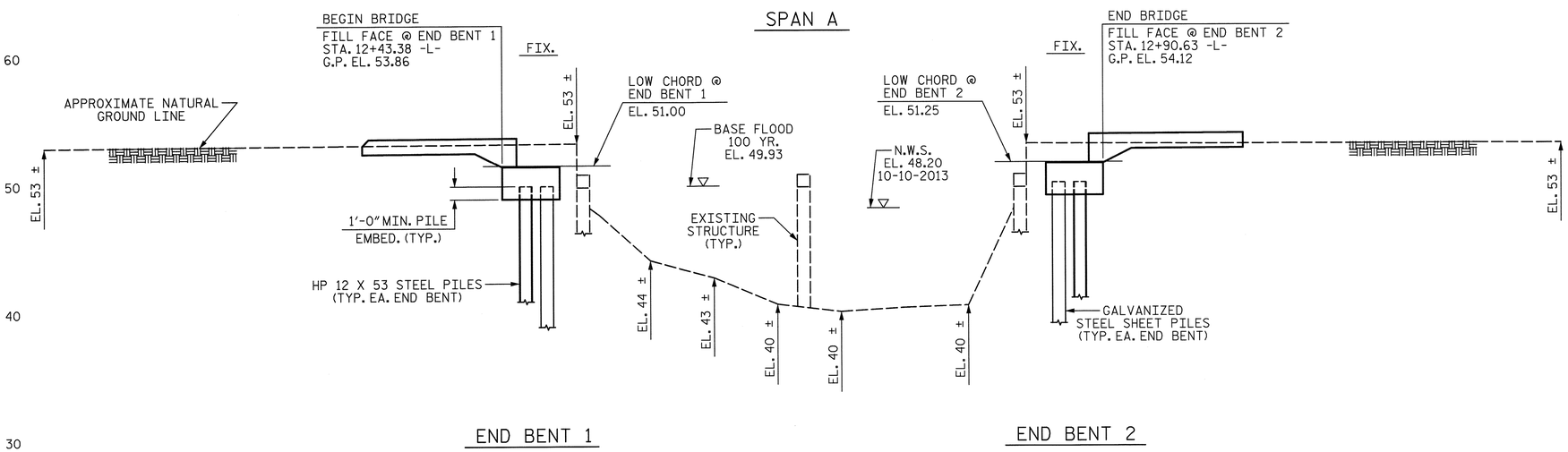

SECTION ALONG ℄ SURVEY -L-

(-)0.2556% △ (+)0.5653%

PVI STA. 10+75.00
EL. = 52.90
VC = 100'

(+)0.5653% △ (-)0.6264%

PVI STA. 13+45.00
EL. = 54.43
VC = 110'

GRADE DATA -L-

HORIZONTAL CURVE DATA

PI STA. 11+17.45 -L-
Δ = 17°-26'-54.6" (RT.)
D = 7°-41'-26.6"
L = 226.88'
T = 114.32'
R = 745.00'

PI STA. 13+46.34 -L-
Δ = 13°-57'-45.4" (RT.)
D = 6°-01'-52.1"
L = 231.51'
T = 116.33'
R = 950.00'

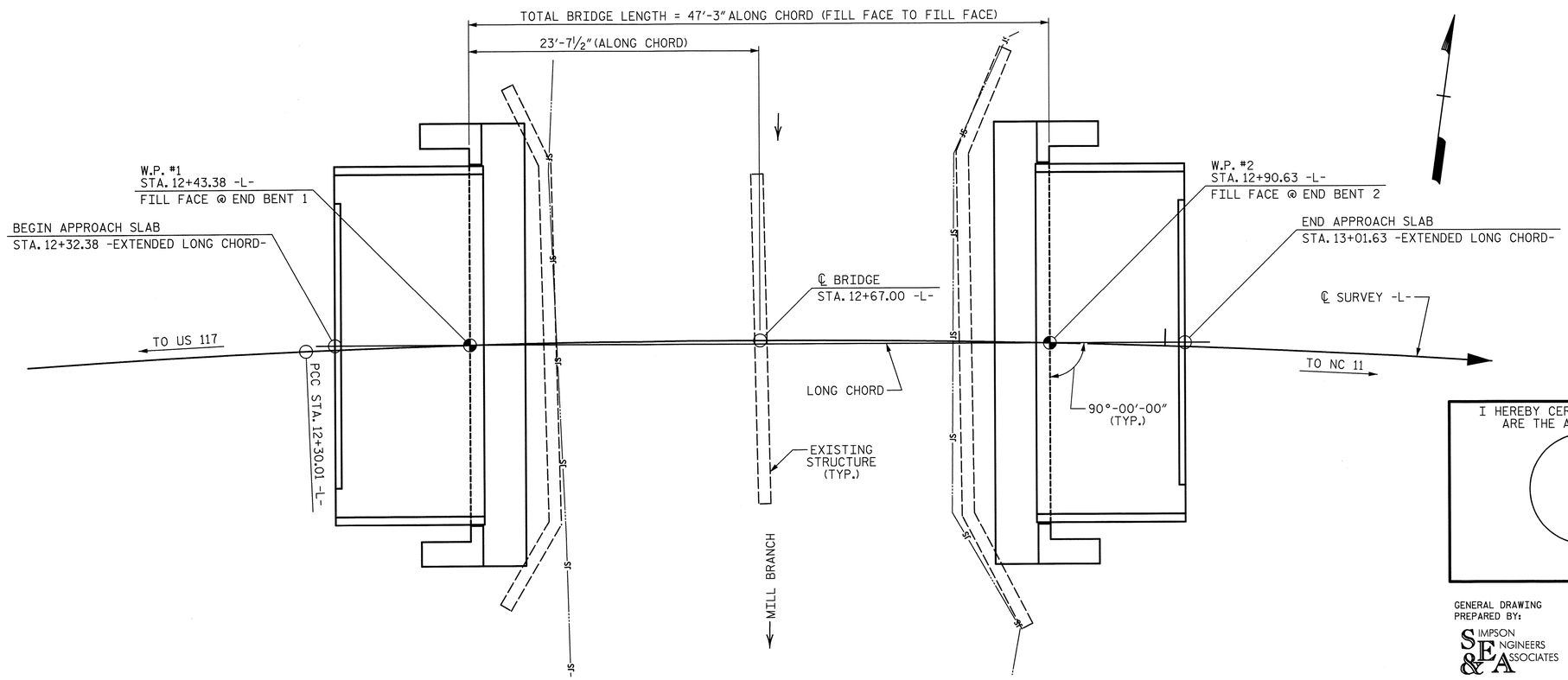

PLAN

(PILES AND STEEL SHEET PILES NOT SHOWN IN PLAN VIEW)

HYDRAULIC DATA:

DESIGN DISCHARGE	= 600 CFS
FREQUENCY OF DESIGN FLOOD	= 25 YEAR
DESIGN HIGH WATER ELEVATION	= 49.20
DRAINAGE AREA	= 4.2 SQ. MI.
BASE DISCHARGE (Q 100)	= 900 CFS
BASE HIGH WATER ELEVATION	= 49.93

OVERTOPPING FLOOD DATA:

OVERTOPPING DISCHARGE	= 2877 CFS
FREQUENCY OF OVERTOPPING FLOOD	= 500+ YEAR
OVERTOPPING FLOOD ELEVATION	= 53.80

I HEREBY CERTIFY THESE PLANS ARE THE AS-BUILT PLANS

PROJECT NO. 17BP.3.R.41
DUPLIN COUNTY
STATION: 12+67.00 -L-

SHEET 1 OF 2 REPLACES BRIDGE #384

STATE OF NORTH CAROLINA
DEPARTMENT OF TRANSPORTATION
RALEIGH

GENERAL DRAWING

FOR BRIDGE ON SR 1937
(STALLINGS RD.) OVER MILL BRANCH
BETWEEN US 117 AND NC 11

27'-10" CLEAR ROADWAY - 90° SKEW

GENERAL DRAWING PREPARED BY:
SIMPSON ENGINEERS & ASSOCIATES
5640 Dillard Drive
Suite 200
Cary, NC 27518
(919) 852-0468
(919) 852-0598 (Fax)
www.simpsonengr.com
LICENSURE NO. C-2521

NORTH CAROLINA PROFESSIONAL SEAL 11268 ENGINEER BETSY S. COX
Betsy S. Cox 6-5-14

REVISIONS						SHEET NO.
NO.	BY:	DATE:	NO.	BY:	DATE:	S-1
1			3			TOTAL SHEETS
2			4			14

DRAWN BY:	T. BANKOVICH	DATE:	6-14
CHECKED BY:	B.S. COX	DATE:	6-14
DESIGN ENGINEER OF RECORD:	P.N. HOLDER	DATE:	6-14

6/4/2014 3:51:03 PM G:\Projects\2014\Duplin 384\Structures\Drawings\Final\Duplin 384_sd_gd.dgn

TBM #4 RAILROAD SPIKE IN 24" SWEET GUM, STA. 13+18.10 -L-, 40.06 LT., EL. 54.14

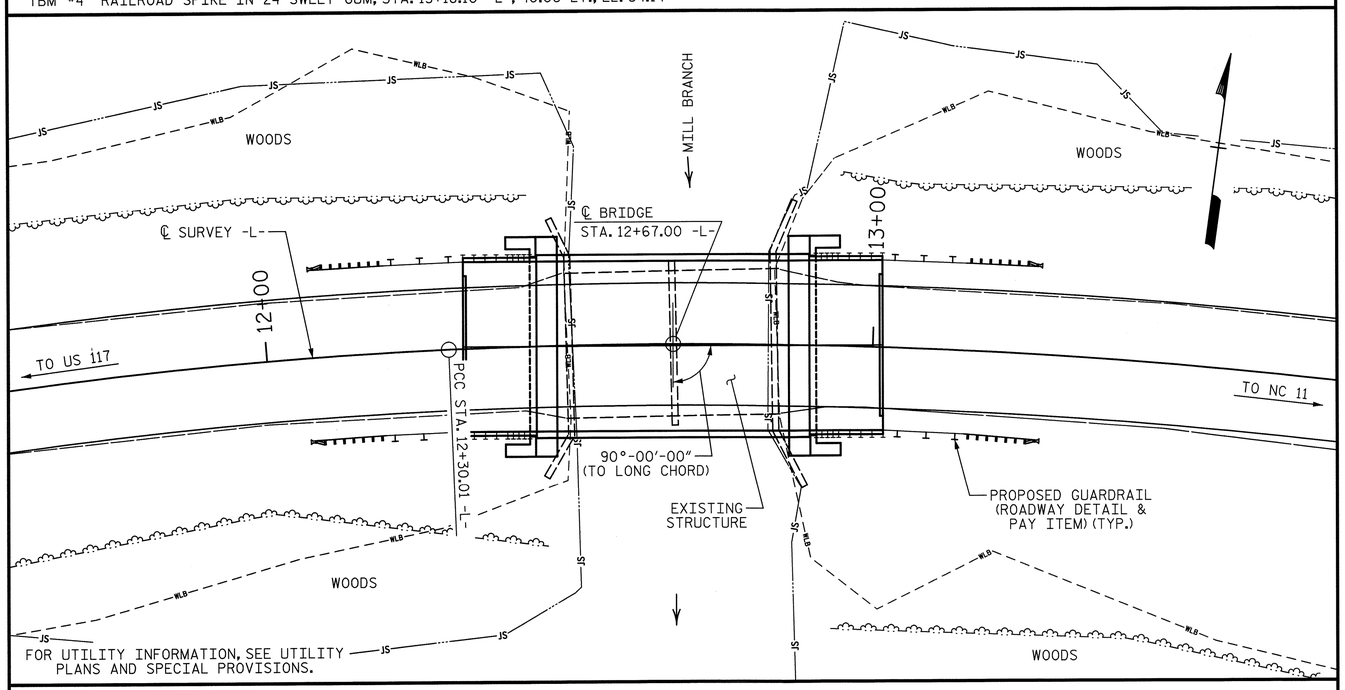

LOCATION SKETCH

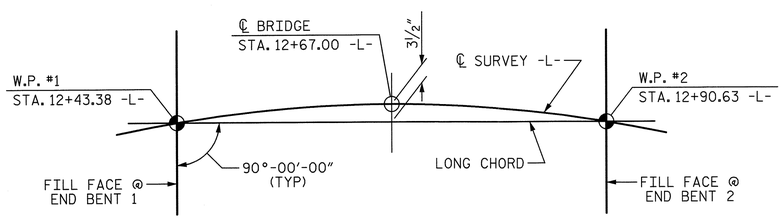

CHORD LAYOUT

NOTE: THE EFFECTS OF THE HORIZONTAL CURVE SHALL BE NEGLECTED IN THE CONSTRUCTION OF THIS BRIDGE. BRIDGE TO BE BUILT ALONG THE LONG CHORD BETWEEN THE WORK POINTS AT THE FILL FACES.

TOTAL BILL OF MATERIAL

	REMOVAL OF EXISTING STRUCTURE	PDA TESTING	CLASS A CONCRETE	BRIDGE APPROACH SLABS	REINFORCING STEEL	HP 12 X 53 STEEL PILES		PILE REDRIVES	VERTICAL CONCRETE BARRIER RAIL	ELASTOMERIC BEARINGS	3'-0" X 1'-9" PRESTRESSED CONCRETE CORED SLABS		STEEL SHEET PILES
	LS	EA	CY	LS	LB	NO.	LF	EA	LF	LS	NO.	LF	SF
SUPERSTRUCTURE				LS					90.25	LS	10	450.00	
END BENT 1			17.3		2,729	5	250	3					1,993
END BENT 2			17.3		2,729	5	250	3					1,993
TOTAL	LS	1	34.6	LS	5,458	10	500	6	90.25	LS	10	450.00	3,986

NOTES:

ASSUMED LIVE LOAD = HL-93 OR ALTERNATE LOADING.

THIS BRIDGE HAS BEEN DESIGNED IN ACCORDANCE WITH THE AASHTO LRFD BRIDGE DESIGN SPECIFICATIONS.

THIS BRIDGE IS LOCATED IN SEISMIC ZONE 1.

FOR OTHER DESIGN DATA AND GENERAL NOTES, SEE SHEET SN.

FOR EROSION CONTROL MEASURES, SEE EROSION CONTROL PLANS.

REMOVAL OF THE EXISTING BRIDGE SHALL BE PERFORMED SO AS NOT TO ALLOW DEBRIS TO FALL INTO THE WATER. THE CONTRACTOR SHALL REMOVE THE BRIDGE AND SUBMIT PLANS FOR DEMOLITION IN ACCORDANCE WITH ARTICLE 402-2 OF THE STANDARD SPECIFICATIONS.

THE EXISTING STRUCTURE CONSISTS OF 1 SPAN @ 17'-10" AND 1 SPAN @ 17'-8" WITH A CLEAR ROADWAY WIDTH OF 24 FT. THE SUPERSTRUCTURE CONSISTS OF A REINFORCED CONCRETE DECK ON TIMBER JOISTS. THE END BENTS AND BENT ARE TIMBER CAPS ON TIMBER PILES. THE EXISTING STRUCTURE, WHICH IS LOCATED AT THE SITE OF THE PROPOSED STRUCTURE, SHALL BE REMOVED. THE EXISTING BRIDGE IS PRESENTLY POSTED FOR LOAD LIMIT. SHOULD THE STRUCTURAL INTEGRITY OF THE BRIDGE DETERIORATE DURING CONSTRUCTION OF THE PROPOSED BRIDGE, THE LOAD LIMIT MAY BE REDUCED AS NECESSARY DURING THE LIFE OF THE PROJECT. FOR REMOVAL OF EXISTING STRUCTURE, SEE SPECIAL PROVISIONS.

THE SUBSTRUCTURE OF THE EXISTING BRIDGE INDICATED ON THE PLANS IS FROM THE BEST INFORMATION AVAILABLE. THIS INFORMATION IS SHOWN FOR THE CONVENIENCE OF THE CONTRACTOR. THE CONTRACTOR SHALL HAVE NO CLAIM WHATSOEVER AGAINST THE DEPARTMENT OF TRANSPORTATION FOR ANY DELAYS OR ADDITIONAL COST INCURRED BASED ON DIFFERENCES BETWEEN THE EXISTING BRIDGE SUBSTRUCTURE SHOWN ON THE PLANS AND THE ACTUAL CONDITIONS AT THE PROJECT SITE.

THIS STRUCTURE HAS BEEN DESIGNED IN ACCORDANCE WITH "HEC 18-EVALUATING SCOUR AT BRIDGES."

FOR SUBMITTAL OF WORKING DRAWINGS, SEE SPECIAL PROVISIONS.

FOR FALSEWORK AND FORMWORK, SEE SPECIAL PROVISIONS.

FOR CRANE SAFETY, SEE SPECIAL PROVISIONS.

FOR GROUT FOR STRUCTURES, SEE SPECIAL PROVISIONS.

ASPHALT WEARING SURFACE IS INCLUDED IN ROADWAY QUANTITY ON ROADWAY PLANS.

FOUNDATION NOTES:

FOR PILES, SEE SECTION 450 OF THE STANDARD SPECIFICATIONS.

PILES AT END BENT 1 AND END BENT 2 ARE DESIGNED FOR A FACTORED RESISTANCE OF 75 TONS PER PILE.

DRIVE PILES AT END BENT 1 AND END BENT 2 TO A REQUIRED DRIVING RESISTANCE OF 125 TONS PER PILE.

TESTING PILES WITH THE PILE DRIVING ANALYZER (PDA) DURING DRIVING, RESTRIKING OR REDRIVING MAY BE REQUIRED. THE ENGINEER WILL DETERMINE THE NEED FOR PDA TESTING. FOR PDA TESTING, SEE SECTION 450 OF THE STANDARD SPECIFICATIONS AND FOR PILE DRIVING CRITERIA, SEE PILE DRIVING CRITERIA PROVISION.

INSTALL STEEL SHEET PILES TO A MINIMUM TIP ELEVATION OF 9.0 FT. AT END BENT 1 AND END BENT 2.

INSTALL STEEL SHEET PILES WALLS BEFORE INSTALLING BRIDGE END BENT PILES.

THE SCOUR CRITICAL ELEVATIONS FOR SHEET PILES AT END BENT 1 AND END BENT 2 IS ELEVATION 33.0 FT. AND 37.0 FT., RESPECTIVELY. SCOUR CRITICAL ELEVATIONS ARE USED TO MONITOR POSSIBLE SCOUR PROBLEMS DURING THE LIFE OF THE STRUCTURE.

STEEL SHEET PILES SHALL BE GALVANIZED.

FOR GALVANIZED STEEL SHEET PILES, SEE STEEL SHEET PILES SPECIAL PROVISIONS.

PROJECT NO. 17BP.3.R.41
DUPLIN COUNTY
STATION: 12+67.00 -L-

SHEET 2 OF 2

STATE OF NORTH CAROLINA
DEPARTMENT OF TRANSPORTATION
RALEIGH

GENERAL DRAWING

FOR BRIDGE ON SR 1937
(STALLINGS RD.) OVER MILL BRANCH
BETWEEN US 117 AND NC 11

27'-10" CLEAR ROADWAY - 90° SKEW

GENERAL DRAWING
PREPARED BY:
SIMPSON ENGINEERS & ASSOCIATES
5640 Dillard Drive
Suite 200
Cary, NC 27518
(919) 852-0468
(919) 852-0598 (Fax)
www.simpsonengr.com
LICENSURE NO. C-2521

NORTH CAROLINA PROFESSIONAL SEAL 11268 ENGINEER BETSY S. COX
Betsy S. Cox 6-5-14

REVISIONS						SHEET NO.
NO.	BY:	DATE:	NO.	BY:	DATE:	S-2
1			3			TOTAL SHEETS
2			4			14

DRAWN BY: T. BANKOVICH DATE: 6-14
CHECKED BY: B.S. COX DATE: 6-14
DESIGN ENGINEER OF RECORD: P.N. HOLDER DATE: 6-14

6/4/2014 3:51:03 PM G:\Projects\2014\Duplin 384\Structures\Drawings\Final\Duplin 384_sd_gd.dgn

LOAD AND RESISTANCE FACTOR RATING (LRFD) SUMMARY FOR PRESTRESSED CONCRETE GIRDERS

LEVEL		VEHICLE	WEIGHT (W) (TONS)	CONTROLLING LOAD RATING (#)	MINIMUM RATING FACTORS (RF)	TONS = W X RF	STRENGTH I LIMIT STATE											SERVICE III LIMIT STATE						COMMENT NUMBER
								MOMENT					SHEAR						MOMENT					
							LIVELOAD FACTORS	DISTRIBUTION FACTORS (DF)	RATING FACTOR	SPAN	GIRDER LOCATION	DISTANCE FROM LEFT END OF SPAN (ft)	DISTRIBUTION FACTORS (DF)	RATING FACTOR	SPAN	GIRDER LOCATION	DISTANCE FROM LEFT END OF SPAN (ft)	LIVELOAD FACTORS	DISTRIBUTION FACTORS (DF)	RATING FACTOR	SPAN	GIRDER LOCATION	DISTANCE FROM LEFT END OF SPAN (ft)	
DESIGN LOAD RATING		HL-93(Inv)	N/A	1	1.16	--	1.75	0.278	1.39	A	EL	22	0.539	1.21	A	EL	2.2	0.80	0.278	1.16	A	EL	22.000	
		HL-93(Opr)	N/A	--	1.57	--	1.35	0.278	1.81	A	EL	22	0.539	1.57	A	EL	2.2	N/A	--	--	--	--	--	
		HS-20(Inv)	36.000	2	1.43	51.325	1.75	0.278	1.71	A	EL	22	0.539	1.44	A	EL	2.2	0.80	0.278	1.43	A	EL	22.000	
		HS-20(Opr)	36.000	--	1.86	67.064	1.35	0.278	2.22	A	EL	22	0.539	1.86	A	EL	2.2	N/A	--	--	--	--	--	
LEGAL LOAD RATING	SV	SNSH	13.500	--	2.79	37.612	1.4	0.278	4.18	A	EL	22	0.539	3.97	A	EL	2.2	0.80	0.278	2.79	A	EL	22.000	
		SNGARBS2	20.000	--	2.25	44.989	1.4	0.278	3.38	A	EL	22	0.539	2.91	A	EL	2.2	0.80	0.278	2.25	A	EL	22.000	
		SNAGRIS2	22.000	--	2.21	48.501	1.4	0.278	3.28	A	EL	17.6	0.539	2.74	A	EL	2.2	0.80	0.278	2.20	A	EL	22.000	
		SNCOTTS3	27.250	--	1.39	37.906	1.4	0.278	2.09	A	EL	22	0.539	1.99	A	EL	2.2	0.80	0.278	1.39	A	EL	22.000	
		SNAGGRS4	34.925	--	1.23	42.872	1.4	0.278	1.84	A	EL	22	0.539	1.72	A	EL	2.2	0.80	0.278	1.23	A	EL	22.000	
		SNS5A	35.550	--	1.2	42.509	1.4	0.278	1.8	A	EL	22	0.539	1.78	A	EL	2.2	0.80	0.278	1.20	A	EL	22.000	
		SNS6A	39.950	--	1.13	44.999	1.4	0.278	1.69	A	EL	22	0.539	1.65	A	EL	2.2	0.80	0.278	1.13	A	EL	22.000	
		SNS7B	42.000	3	1.07	45.099	1.4	0.278	1.61	A	EL	22	0.539	1.66	A	EL	2.2	0.80	0.278	1.07	A	EL	22.000	
	TTST	TNAGRIT3	33.000	--	1.38	45.622	1.4	0.278	2.08	A	EL	22	0.539	1.94	A	EL	2.2	0.80	0.278	1.38	A	EL	22.000	
		TNT4A	33.075	--	1.4	46.205	1.4	0.278	2.1	A	EL	22	0.539	1.86	A	EL	2.2	0.80	0.278	1.40	A	EL	22.000	
		TNT6A	41.600	--	1.17	48.773	1.4	0.278	1.76	A	EL	22	0.539	1.81	A	EL	2.2	0.80	0.278	1.17	A	EL	22.000	
		TNT7A	42.000	--	1.2	50.193	1.4	0.278	1.79	A	EL	22	0.539	1.67	A	EL	2.2	0.80	0.278	1.20	A	EL	22.000	
		TNT7B	42.000	--	1.24	52.255	1.4	0.278	1.87	A	EL	22	0.539	1.59	A	EL	2.2	0.80	0.278	1.24	A	EL	22.000	
		TNAGRIT4	43.000	--	1.19	50.954	1.4	0.278	1.78	A	EL	22	0.539	1.53	A	EL	2.2	0.80	0.278	1.18	A	EL	22.000	
		TNAGT5A	45.000	--	1.1	49.619	1.4	0.278	1.66	A	EL	22	0.539	1.57	A	EL	2.2	0.80	0.278	1.10	A	EL	22.000	
		TNAGT5B	45.000	--	1.08	48.448	1.4	0.278	1.62	A	EL	22	0.539	1.45	A	EL	2.2	0.80	0.278	1.08	A	EL	22.000	

LOAD FACTORS:

DESIGN LOAD RATING FACTORS	LIMIT STATE	γ_{DC}	γ_{DW}
	STRENGTH I	1.25	1.50
	SERVICE III	1.00	1.00

NOTES:

MINIMUM RATING FACTORS ARE BASED ON THE STRENGTH I AND SERVICE III LIMIT STATES.

ALLOWABLE STRESSES FOR SERVICE III LIMIT STATE ARE AS REQUIRED FOR DESIGN.

COMMENTS:

1.
2.
3.
4.

(#) CONTROLLING LOAD RATING

(1) DESIGN LOAD RATING (HL-93)
(2) DESIGN LOAD RATING (HS-20)
(3) LEGAL LOAD RATING **
** SEE CHART FOR VEHICLE TYPE

GIRDER LOCATION

I - INTERIOR GIRDER
EL - EXTERIOR LEFT GIRDER
ER - EXTERIOR RIGHT GIRDER

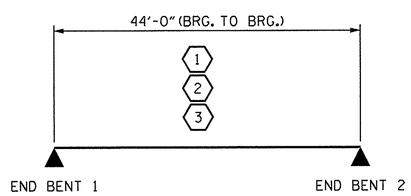

LRFR SUMMARY

(FOR SPAN 'A')

PROJECT NO. 17BP.3.R.41
DUPLIN COUNTY
STATION: 12+67.00 -L-

STATE OF NORTH CAROLINA
DEPARTMENT OF TRANSPORTATION
RALEIGH

STANDARD

LRFR SUMMARY FOR PRESTRESSED CONCRETE GIRDERS
(NON-INTERSTATE TRAFFIC)

NORTH CAROLINA PROFESSIONAL SEAL 21271 ENGINEER GREGORY W. DICKEY
5/28/14

REVISIONS						SHEET NO.
NO.	BY:	DATE:	NO.	BY:	DATE:	-
1			3			TOTAL SHEETS
2			4			-

STD. NO. LRFR1

DRAWN BY : P.N.HOLDER DATE : 3/14/14
CHECKED BY : M.L.RORIE DATE : 4/21/14
DESIGN ENGINEER OF RECORD : P.N.HOLDER DATE : 3/14/14

28-MAY-2014 12:06
S:\DPGI\Division3\17BP3R41\pnholder\plans\5 plles\17BP3R41_SD_CS_design.dgn
gdickey

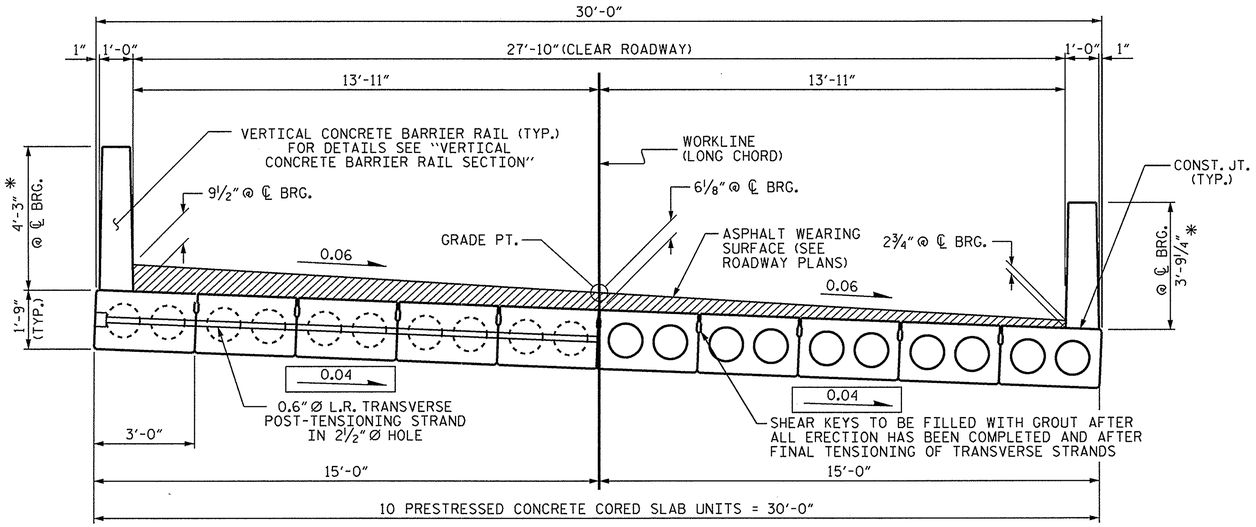

HALF SECTION
AT INTERMEDIATE DIAPHRAGMS

HALF SECTION
THROUGH VOIDS

TYPICAL SECTION

* - THE MAXIMUM BARRIER RAIL HEIGHT AND ASPHALT THICKNESS IS SHOWN. THE HEIGHT OF THE BARRIER RAIL AND ASPHALT THICKNESS VARIES WHILE THE TOP OF THE BARRIER RAIL FOLLOWS THE PROFILE OF THE GUTTERLINE. FOR RAIL HEIGHT DETAILS AND ASPHALT THICKNESS SEE THE "VERTICAL CONCRETE BARRIER RAIL SECTION" DETAIL.

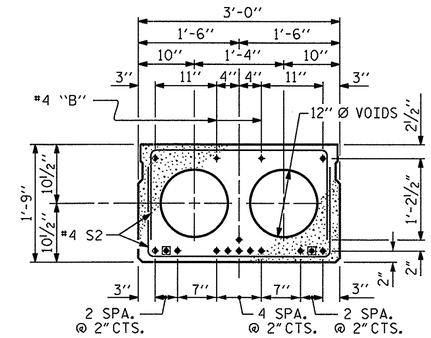

INTERIOR SLAB SECTION
(45' UNIT)
(14 STRANDS REQUIRED)

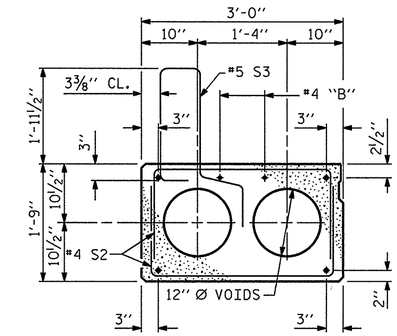

EXT. SLAB SECTION
(FOR PRESTRESSED STRAND LAYOUT, SEE INTERIOR SLAB SECTION.)

0.6" Ø LOW RELAXATION STRAND LAYOUT

● BOND SHALL BE BROKEN ON THESE STRANDS FOR A DISTANCE OF 2'-0" FROM END OF CORED SLAB UNIT. SEE STANDARD SPECIFICATIONS, ARTICLE 1078-7.

DEBONDING LEGEND

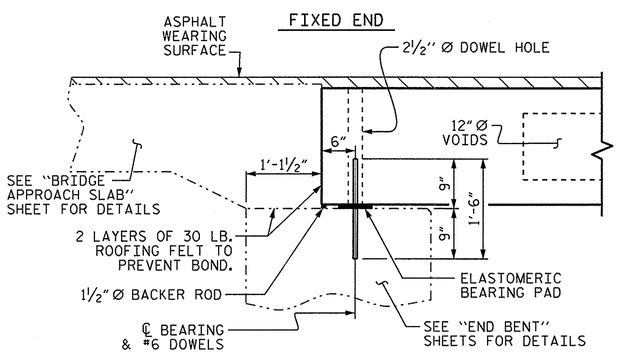

SECTION AT END BENT

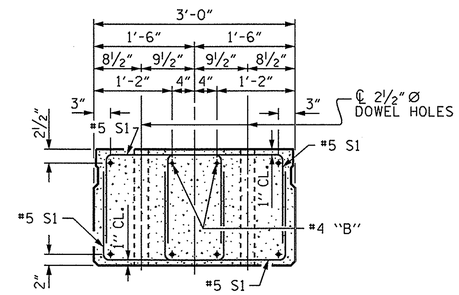

END ELEVATION

SHOWING PLACEMENT OF DOUBLE STIRRUPS AND LOCATION OF DOWEL HOLES. (STRAND LAYOUT NOT SHOWN.) INTERIOR SLAB UNIT SHOWN-EXTERIOR SLAB UNIT SIMILAR EXCEPT SHEAR KEY LOCATION.

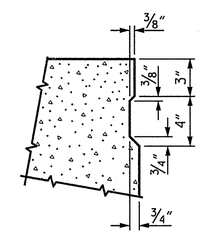

SHEAR KEY DETAIL

NOTE: OMIT SHEAR KEY ON OUTSIDE FACE OF EXTERIOR CORED SLABS.

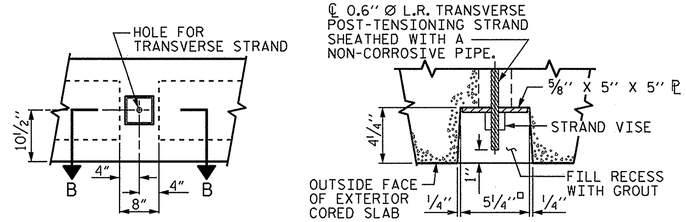

ELEVATION VIEW

SECTION B-B

GROUTED RECESS AT END OF POST-TENSIONED STRAND OF CORED SLABS

PROJECT NO. 17BP.3.R.41
DUPLIN COUNTY
STATION: 12+67.00 -L-

SHEET 1 OF 3

STATE OF NORTH CAROLINA
DEPARTMENT OF TRANSPORTATION
RALEIGH

STANDARD
3'-0" X 1'-9"
PRESTRESSED CONCRETE
CORED SLAB UNIT
90° SKEW

NORTH CAROLINA PROFESSIONAL SEAL 21271 ENGINEER GREGORY N. DICKEY
5/28/14

REVISIONS								SHEET NO.
NO.	BY:	DATE:	NO.	BY:	DATE:			-
1			3					TOTAL SHEETS
2			4					-

DRAWN BY :	P.N.HOLDER	DATE :	3/14/14
CHECKED BY :	M.L.RORIE	DATE :	4/2/14
DESIGN ENGINEER OF RECORD :	P.N.HOLDER	DATE :	3/14/14

28-MAY-2014 12:06
S:\DPG1\Division3\17BP3R41\pnholder\plans\5 piles\17BP3R41_SD_CS_design.dgn
gdickey

STD. NO. 21" PCS2_30_90S

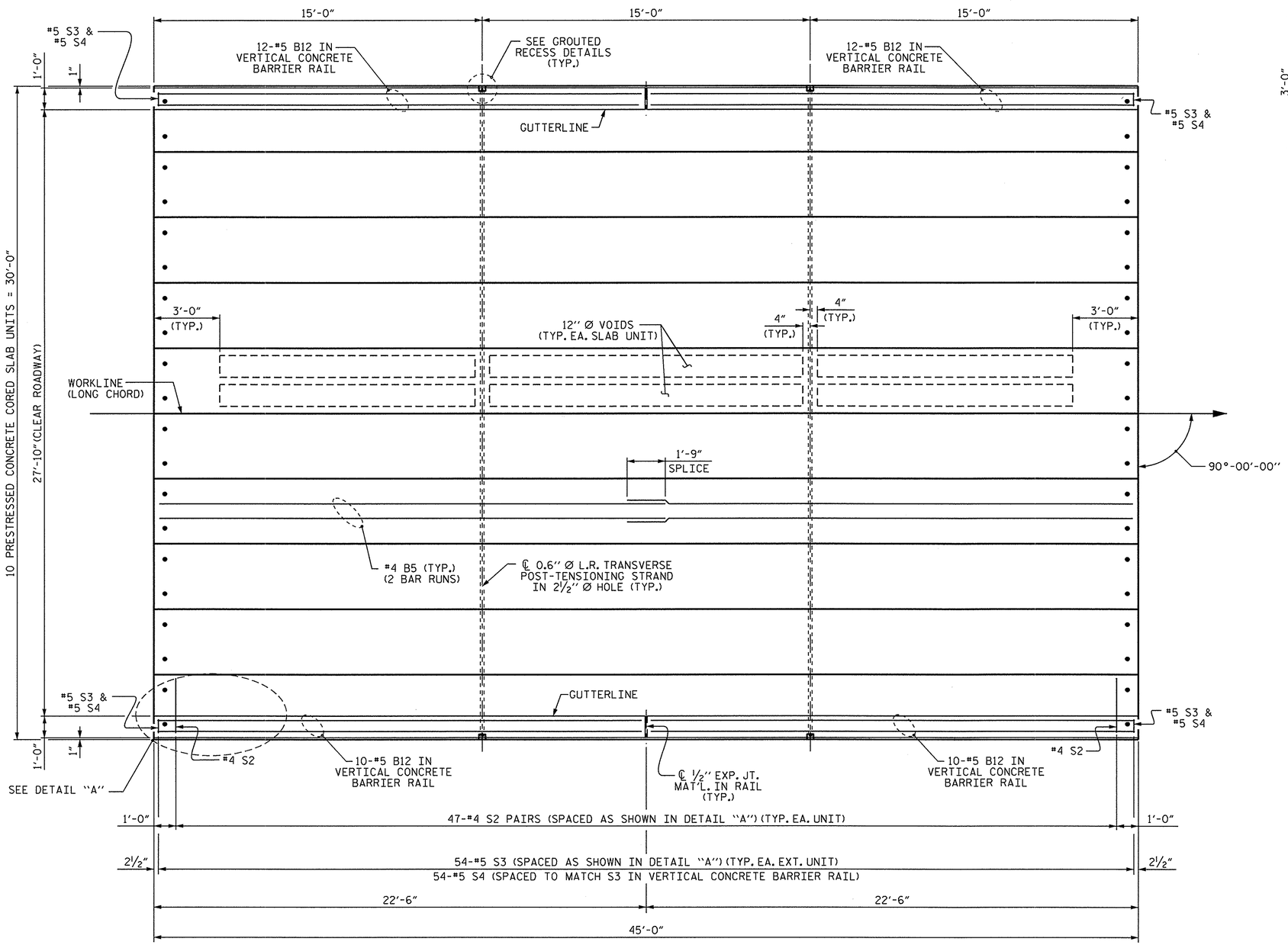

PLAN OF UNIT

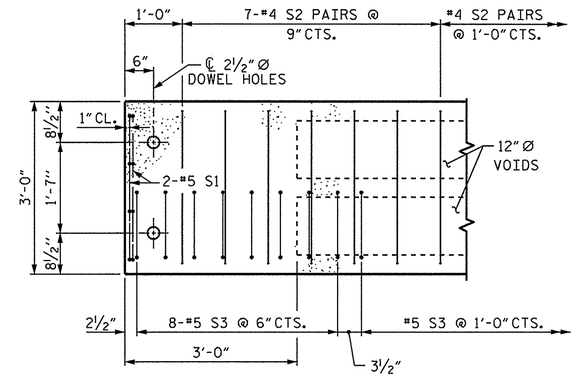

DETAIL "A"

NOTE: EXTERIOR UNIT SHOWN - INTERIOR UNIT SIMILAR EXCEPT OMIT #5 S3 BARS.

PROJECT NO. 17BP.3.R.41

DUPLIN COUNTY

STATION: 12+67.00 -L-

SHEET 2 OF 3

STATE OF NORTH CAROLINA
DEPARTMENT OF TRANSPORTATION
RALEIGH

PLAN OF 45' UNIT 27'-10" CLEAR ROADWAY 90° SKEW

NORTH CAROLINA PROFESSIONAL SEAL 21271 ENGINEER GREGORY W. DICKEY 5/28/14

REVISIONS						SHEET NO.
NO.	BY:	DATE:	NO.	BY:	DATE:	-
1			3			TOTAL SHEETS
2			4			-

DRAWN BY : P.N.HOLDER DATE : 3/14/14
CHECKED BY : M.L.RORIE DATE : 4/2/14
DESIGN ENGINEER OF RECORD : P.N.HOLDER DATE : 3/14/14

28-MAY-2014 12:06
S:\DPGI\Division3\17BP3R41\pnholder\plans\5 plies\17BP3R41_SD_CS_design.dgn
gdickey

STD. NO. 21" PCS_30_90S_45L

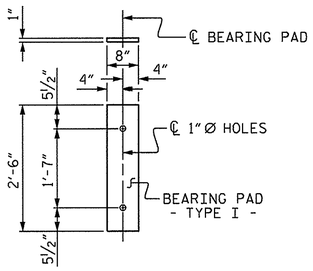

FIXED END
(TYPE I - 20 REQ'D)

ELASTOMERIC BEARING DETAILS

ELASTOMER IN ALL BEARINGS SHALL BE 50 DUROMETER HARDNESS.

BILL OF MATERIAL FOR VERTICAL CONCRETE BARRIER RAIL

BAR	BARS PER PAIR OF EXTERIOR UNITS	TOTAL NO.	SIZE	TYPE	LENGTH	WEIGHT
	45' UNIT					
✻B12	44	44	#5	STR	22'-1"	1014
✻ S4	108	108	#5	2	7'-2"	807
✻EPOXY COATED REINFORCING STEEL				LBS.		1821
CLASS AA CONCRETE				CU.YDS.		13.5
TOTAL VERTICAL CONCRETE BARRIER RAIL				LN. FT.		90.25

BILL OF MATERIAL FOR ONE 45' CORED SLAB UNIT

				EXTERIOR UNIT		INTERIOR UNIT	
BAR	NUMBER	SIZE	TYPE	LENGTH	WEIGHT	LENGTH	WEIGHT
B5	4	#4	STR	23'-3"	62	23'-3"	62
S1	8	#5	3	4'-3"	35	4'-3"	35
S2	94	#4	3	5'-4"	335	5'-4"	335
✻ S3	54	#5	1	6'-9"	380		
REINFORCING STEEL			LBS.		432		432
✻EPOXY COATED REINFORCING STEEL			LBS.		380		
5000 P.S.I. CONCRETE			CU. YDS.		6.5		6.5
0.6"Ø L.R. STRANDS			No.		14		14

BAR TYPES

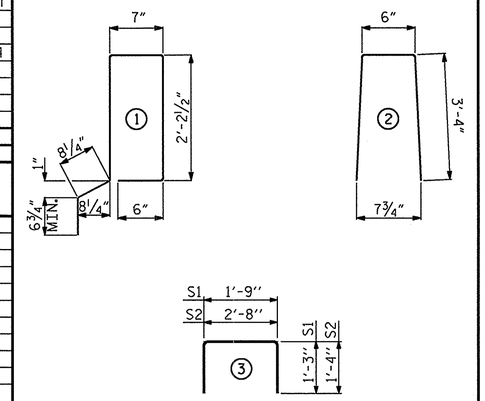

ALL BAR DIMENSIONS ARE OUT TO OUT

NOTES

ALL PRESTRESSING STRANDS SHALL BE 7-WIRE LOW RELAXATION GRADE 270 STRANDS AND SHALL CONFORM TO AASHTO M203 EXCEPT FOR SAMPLING REQUIREMENTS WHICH SHALL BE IN ACCORDANCE WITH THE STANDARD SPECIFICATIONS.

ALL REINFORCING STEEL CAST WITH THE CORED SLAB SECTIONS SHALL BE GRADE 60 AND SHALL BE INCLUDED IN THE UNIT PRICE BID FOR PRESTRESSED CONCRETE CORED SLABS.

RECESSES FOR TRANSVERSE STRANDS SHALL BE GROUTED AFTER THE TENSIONING OF THE STRANDS.

THE 2½"Ø DOWEL HOLES AT FIXED ENDS OF SLAB SECTIONS SHALL BE FILLED WITH NON-SHRINK GROUT.

THE BACKER RODS SHALL CONFORM TO THE REQUIREMENTS OF TYPE M BOND BREAKER. SEE SECTION 1028 OF THE STANDARD SPECIFICATIONS.

WHEN CORED SLABS ARE CAST, AN INTERNAL HOLD-DOWN SYSTEM SHALL BE EMPLOYED TO PREVENT VOIDS FROM RISING OR MOVING SIDEWAYS. AT LEAST SIX WEEKS PRIOR TO CASTING CORED SLABS, THE CONTRACTOR SHALL SUBMIT TO THE ENGINEER FOR REVIEW AND COMMENT, DETAILED DRAWINGS OF THE PROPOSED HOLD-DOWN SYSTEM. IN ADDITION TO STRUCTURAL DETAILS, LOCATION AND SPACING OF THE HOLD-DOWNS SHALL BE INDICATED.

ALL REINFORCING STEEL IN THE VERTICAL CONCRETE BARRIER RAIL SHALL BE EPOXY COATED.

PRESTRESSING STRANDS SHALL BE CUT FLUSH WITH THE CORED SLAB UNIT ENDS.

APPLY EPOXY PROTECTIVE COATING TO CORED SLAB UNIT ENDS.

GROOVED CONTRACTION JOINTS, ½" IN DEPTH, SHALL BE TOOLED IN ALL EXPOSED FACES OF THE BARRIER RAIL AND IN ACCORDANCE WITH ARTICLE 825-10(B) OF THE STANDARD SPECIFICATIONS. A CONTRACTION JOINT SHALL BE LOCATED AT EACH THIRD POINT BETWEEN BARRIER RAIL EXPANSION JOINTS. ONLY ONE CONTRACTION JOINT IS REQUIRED AT MIDPOINT OF BARRIER RAIL SEGMENTS LESS THAN 20 FEET IN LENGTH AND NO CONTRACTION JOINTS ARE REQUIRED FOR THOSE SEGMENTS LESS THAN 10 FEET IN LENGTH.

TRANSVERSE POST TENSIONING OF THE CORED SLAB UNITS SHALL BE DONE IN ACCORDANCE WITH THE STANDARD SPECIFICATIONS.

THE TRANSFER OF LOAD FROM THE ANCHORAGES TO THE CORED SLAB UNIT SHALL BE DONE WHEN THE CONCRETE HAS REACHED A COMPRESSIVE STRENGTH OF NOT LESS THAN THE REQUIRED STRENGTH SHOWN IN THE "CONCRETE RELEASE STRENGTH" TABLE.

FOR GROUT FOR STRUCTURES, SEE SPECIAL PROVISIONS.

CORED SLABS REQUIRED

	NUMBER	LENGTH	TOTAL LENGTH
45' UNIT			
EXTERIOR C.S.	2	45'-0"	90
INTERIOR C.S.	8	45'-0"	360
TOTAL			450

GUTTERLINE ASPHALT THICKNESS & RAIL HEIGHT

27'-10" CLEAR ROADWAY	ASPHALT OVERLAY THICKNESS	RAIL HEIGHT
	@ MID-SPAN	@ MID-SPAN
	SUPERED SECTION	
LEFT	8¼"	4'-2¼"
RIGHT	1½"	3'-7½"

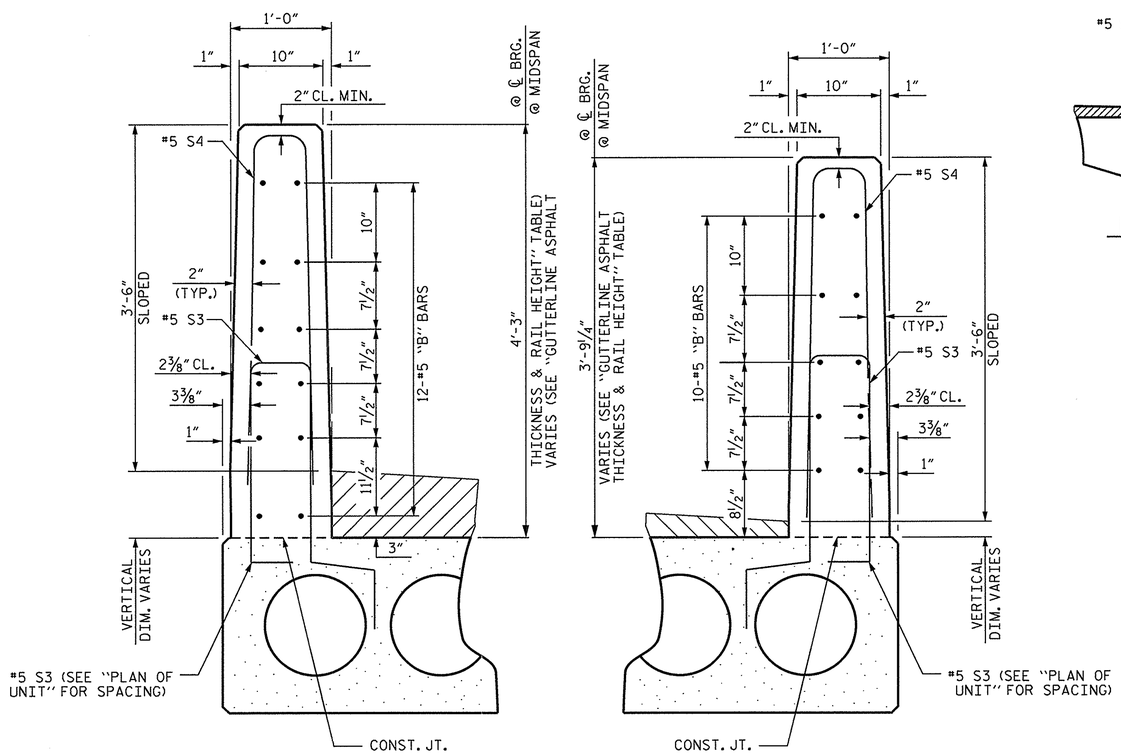

VERTICAL CONCRETE BARRIER RAIL SECTION

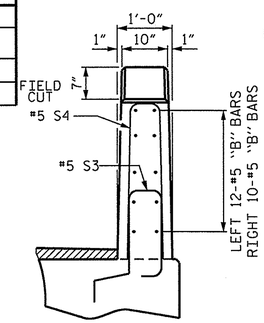

END VIEW

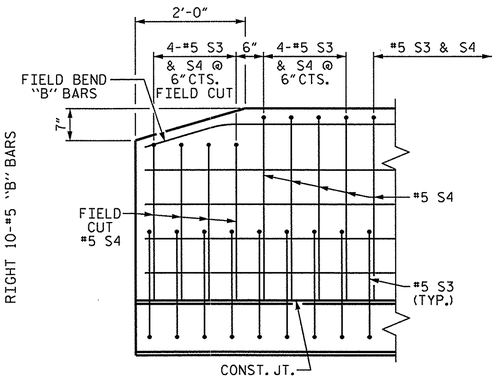

SIDE VIEW

END OF RAIL DETAILS

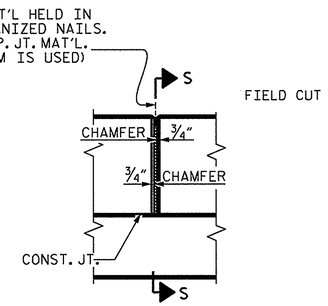

ELEVATION AT EXPANSION JOINTS

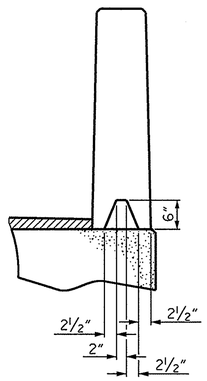

SECTION S-S

AT DAM IN OPEN JOINT
(THIS IS TO BE USED ONLY WHEN SLIP FORM IS USED)

DEAD LOAD DEFLECTION AND CAMBER

	3'-0" x 1'-9"
45' CORED SLAB UNIT	0.6"Ø L.R. STRAND
CAMBER (SLAB ALONE IN PLACE)	1 9/16" ↑
DEFLECTION DUE TO SUPERIMPOSED DEAD LOAD✻✻	5/16" ↓
FINAL CAMBER	1¼" ↑

✻✻ INCLUDES FUTURE WEARING SURFACE

CONCRETE RELEASE STRENGTH

UNIT	PSI
45' UNITS	4000

GRADE 270 STRANDS

	0.6"Ø L.R.
AREA (SQUARE INCHES)	0.217
ULTIMATE STRENGTH (LBS. PER STRAND)	58,600
APPLIED PRESTRESS (LBS. PER STRAND)	43,950

NORTH CAROLINA PROFESSIONAL SEAL 21271 ENGINEER GREGORY W. DICKEY
5/28/14

PROJECT NO. 17BP.3.R.41
DUPLIN COUNTY
STATION: 12+67.00 -L-

SHEET 3 OF 3

STATE OF NORTH CAROLINA
DEPARTMENT OF TRANSPORTATION
RALEIGH

STANDARD
3'-0" X 1'-9"
PRESTRESSED CONCRETE
CORED SLAB UNIT
90° SKEW

REVISIONS						SHEET NO.
NO.	BY:	DATE:	NO.	BY:	DATE:	-
1			3			TOTAL SHEETS
2			4			-

STD. NO. 21" PCS3_30_90S

DRAWN BY :	P.N.HOLDER	DATE :	3/17/14
CHECKED BY :	M.L.RORIE	DATE :	4/3/14
DESIGN ENGINEER OF RECORD :	P.N.HOLDER	DATE :	3/17/14

28-MAY-2014 12:06
S:\DPGI\Division3\17BP3R41\pnholder\plans\5 piles\17BP3R41_SD_CS_design.dgn
gdickey

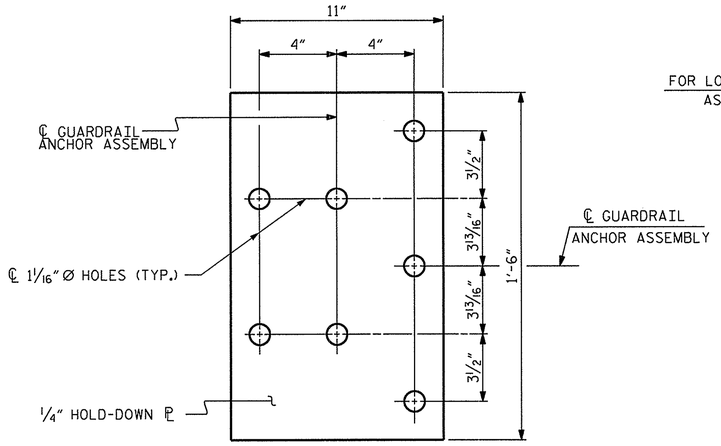

PLAN

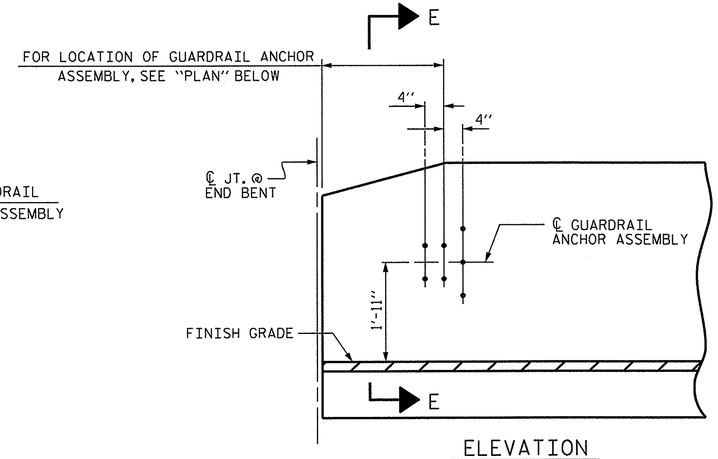

ELEVATION

NOTES

THE GUARDRAIL ANCHOR ASSEMBLY SHALL CONSIST OF A 1/4" HOLD DOWN PLATE AND 7 - 7/8" Ø BOLTS WITH NUTS AND WASHERS.

THE HOLD-DOWN PLATE SHALL CONFORM TO AASHTO M270 GRADE 36. AFTER FABRICATION, THE HOLD-DOWN PLATE SHALL BE HOT-DIP GALVANIZED IN ACCORDANCE WITH AASHTO M111.

BOLTS SHALL CONFORM TO THE REQUIREMENTS OF ASTM A307 AND NUTS SHALL CONFORM TO THE REQUIREMENTS OF AASHTO M291. BOLTS, NUTS AND WASHERS SHALL BE GALVANIZED. (AT THE CONTRACTOR'S OPTION, STAINLESS STEEL BOLTS, NUTS AND WASHERS MAY BE USED AS AN ALTERNATE FOR THE 7/8" Ø GALVANIZED BOLTS, NUTS AND WASHERS. THEY SHALL CONFORM TO OR EXCEED THE MECHANICAL REQUIREMENTS OF ASTM A307. THE USE OF THIS ALTERNATE SHALL BE APPROVED BY THE ENGINEER.)

THE GUARDRAIL ANCHOR ASSEMBLY IS REQUIRED AT ALL POINTS WHERE APPROACH GUARDRAIL IS TO BE ATTACHED TO THE END OF BARRIER RAIL. FOR POINTS OF ATTACHMENT, SEE SKETCH.

AFTER INSTALLATION, THE EXPOSED THREAD OF THE BOLT SHALL BE BURRED WITH A SHARP POINTED TOOL.

THE COST OF THE GUARDRAIL ANCHOR ASSEMBLY SHALL BE INCLUDED IN THE UNIT CONTRACT PRICE BID FOR VERTICAL CONCRETE BARRIER RAIL.

THE VERTICAL REINFORCING BARS MAY BE SHIFTED SLIGHTLY IN THE VERTICAL CONCRETE BARRIER RAIL TO CLEAR ASSEMBLY BOLTS.

THE 1 1/4" Ø HOLES SHALL BE FORMED OR DRILLED WITH A CORE BIT. IMPACT TOOLS WILL NOT BE PERMITTED. ANY CONCRETE DAMAGED BY THIS WORK SHALL BE REPAIRED TO THE SATISFACTION OF THE ENGINEER.

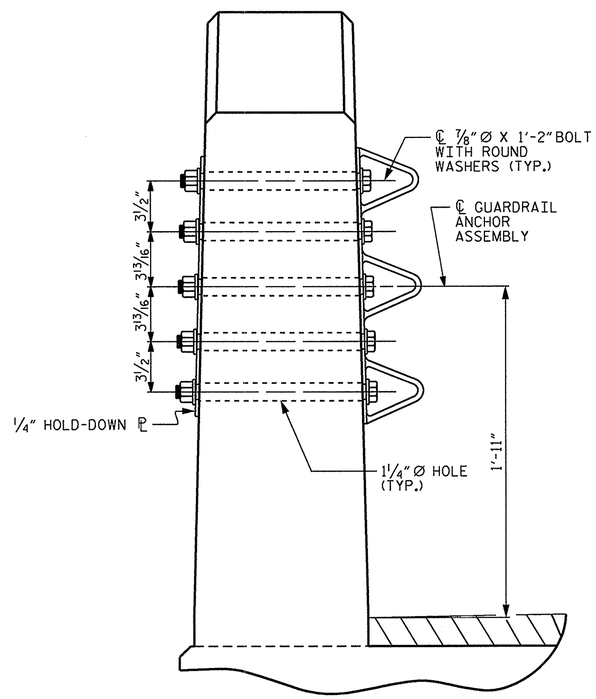

SECTION E-E

GUARDRAIL ANCHOR ASSEMBLY DETAILS

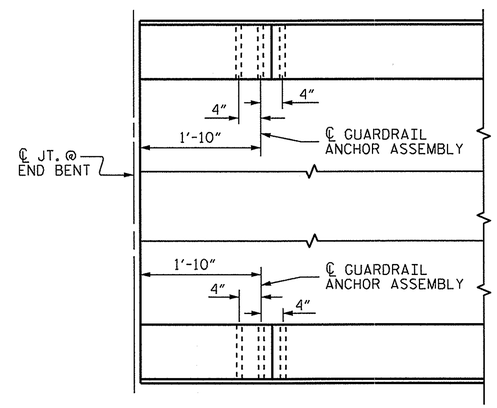

PLAN

LOCATION OF ANCHORS FOR GUARDRAIL

END BENT #1 SHOWN, END BENT #2 SIMILAR.

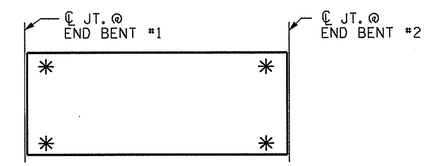

SKETCH SHOWING POINTS OF ATTACHMENT

✳ DENOTES GUARDRAIL ANCHOR ASSEMBLY

PROJECT NO. 17BP.3.R.41
DUPLIN COUNTY
STATION: 12+67.00 -L-

STATE OF NORTH CAROLINA
DEPARTMENT OF TRANSPORTATION
RALEIGH

STANDARD
GUARDRAIL ANCHORAGE FOR VERTICAL CONCRETE BARRIER RAIL

NORTH CAROLINA PROFESSIONAL SEAL 21271 ENGINEER GREGORY W. DICKEY
5/28/14

REVISIONS							SHEET NO.
NO.	BY:	DATE:	NO.	BY:	DATE:		-
1			3				TOTAL SHEETS
2			4				-

DRAWN BY : P.N.HOLDER DATE : 3/14/14
CHECKED BY : M.L.RORIE DATE : 4/3/14

28-MAY-2014 12:06
S:\DPG1\Division3\17BP3R41\pnholder\plans\5 piles\17BP3R41_SD_CS_design.dgn
gdickey

(SHT 1) STD. NO. GRA3

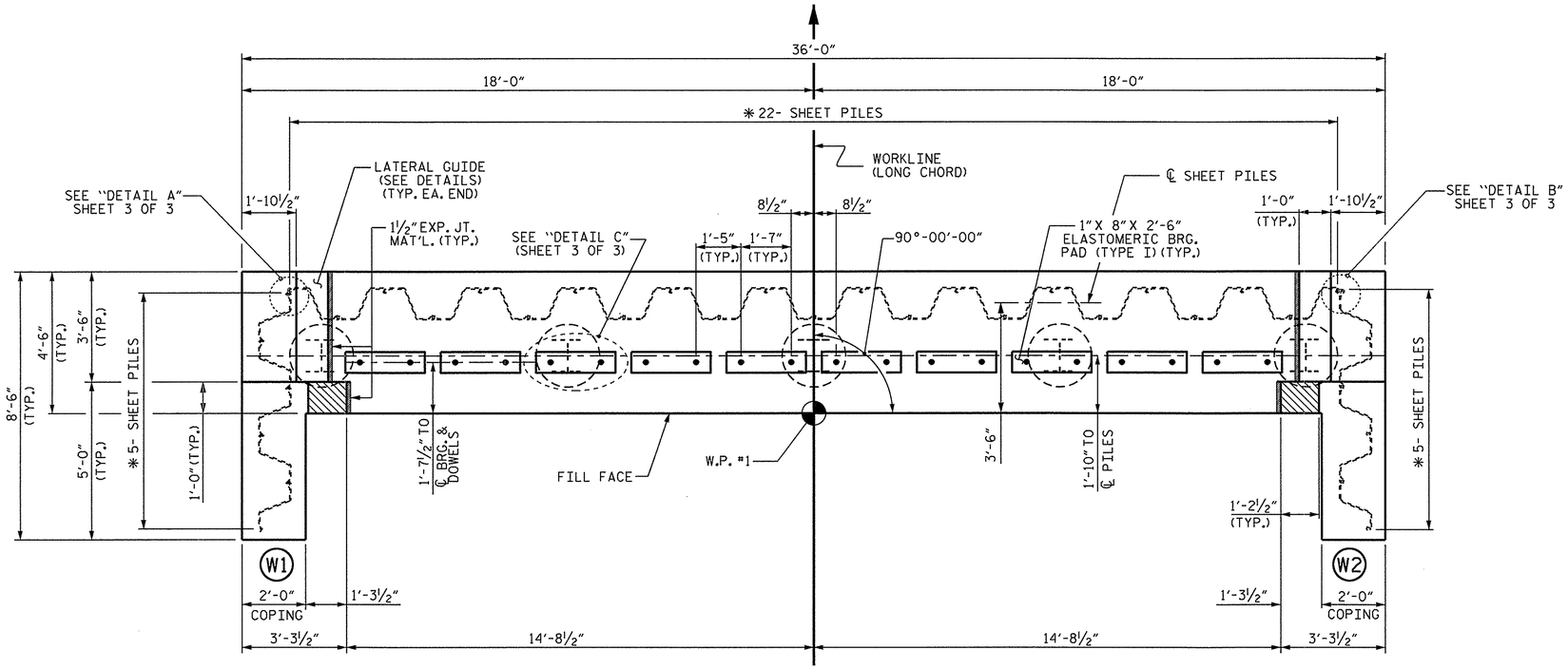

* MIN. SECTION MODULUS OF 30.2 in/ft.

PLAN

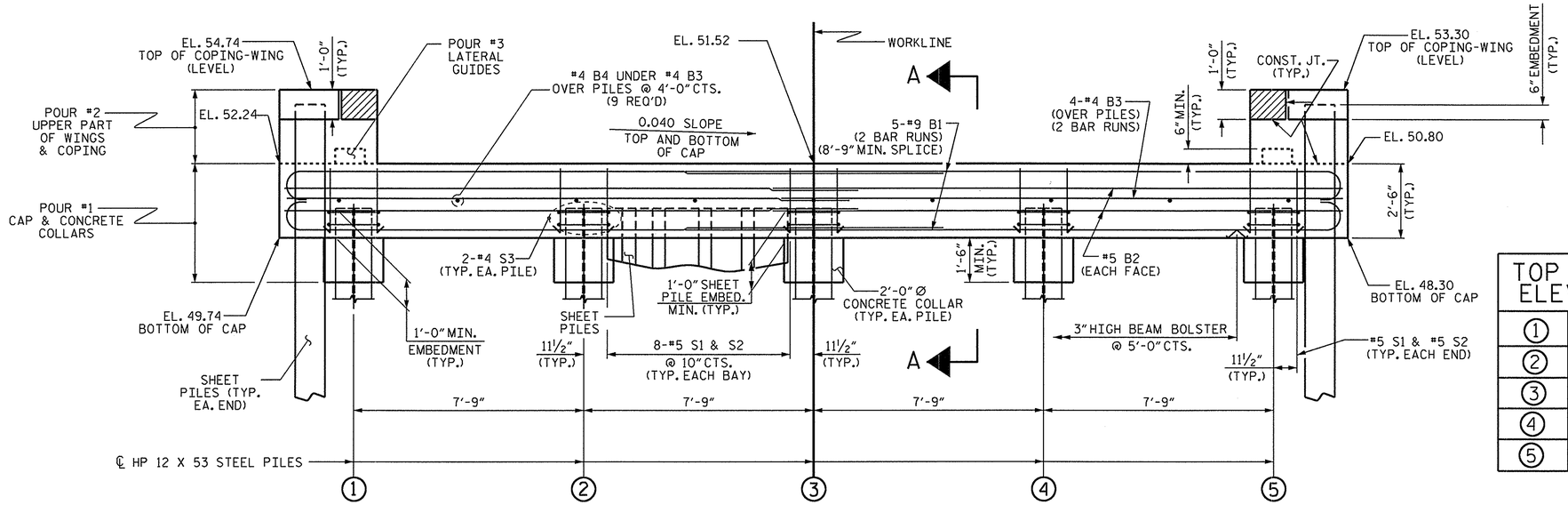

ELEVATION

FOR SECTION A-A, SEE SHEET 3 OF 3.
NOT ALL SHEET PILING SHOWN FOR CLARITY.

NOTES

STIRRUPS IN CAP MAY BE SHIFTED AS NECESSARY TO CLEAR DOWELS.

THE LATERAL GUIDES ARE NOT TO BE POURED UNTIL AFTER THE CORED SLAB UNITS ARE IN PLACE.

THE CONCRETE IN THE SHADED AREA OF THE WING SHALL BE POURED AFTER THE VERTICAL CONCRETE BARRIER RAIL IS CAST IF SLIP FORMING IS USED.

THE CONTRACTOR HAS THE OPTION TO OMIT THE LATERAL GUIDE IF APPROVED BY THE ENGINEER.

INSTALL THE 4"Ø DRAIN PIPE THROUGH THE SHEET PILES AS REQUIRED FOR REINFORCED BRIDGE APPROACH FILLS, SEE THE ROADWAY PLANS.

FOR PILE SPLICE DETAILS, SEE SHEET 3 OF 3.

ALL 2"Ø MAX. HOLES IN STEEL SHEET PILING TO BE DRILLED AND NOT BURNED.

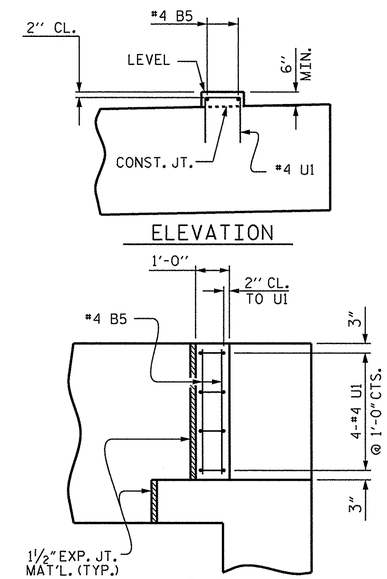

LATERAL GUIDE

(RIGHT SIDE SHOWN, LEFT SIDE SIMILAR)

TOP OF PILE ELEVATIONS	
1	50.66
2	50.35
3	50.04
4	49.73
5	49.42

PROJECT NO. 17BP.3.R.41
DUPLIN COUNTY
STATION: 12+67.00 -L-

SHEET 1 OF 3

STATE OF NORTH CAROLINA
DEPARTMENT OF TRANSPORTATION
RALEIGH

SUBSTRUCTURE
END BENT 1

NORTH CAROLINA PROFESSIONAL SEAL 21271 ENGINEER GREGORY W. DICKEY
5/28/14

REVISIONS						SHEET NO.
NO.	BY:	DATE:	NO.	BY:	DATE:	-
1			3			TOTAL SHEETS
2			4			-

DRAWN BY : P.N.HOLDER DATE : 03/13/14
CHECKED BY : M.L.RORIE DATE : 04/08/14
DESIGN ENGINEER OF RECORD : P.N.HOLDER DATE : 03/13/14

28-MAY-2014 12:06
S:\DPGI\Division3\17BP3R41\pnholder\plans\5 piles\17BP3R41_SD_CS_design.dgn
gdickey

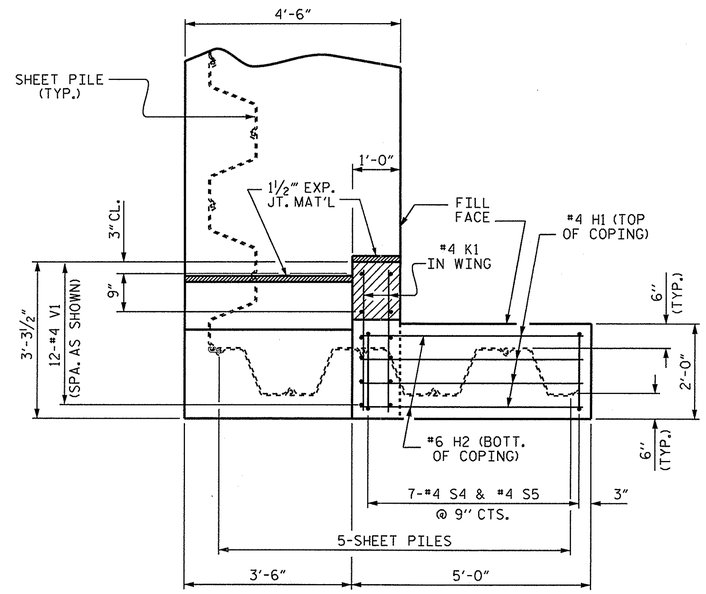

PLAN - COPING (W1)

DRILL 2" Ø MAX. HOLE IN SHEET PILES FOR #9 B1, #5 B2, #4 K1, AND #4 S5 BARS

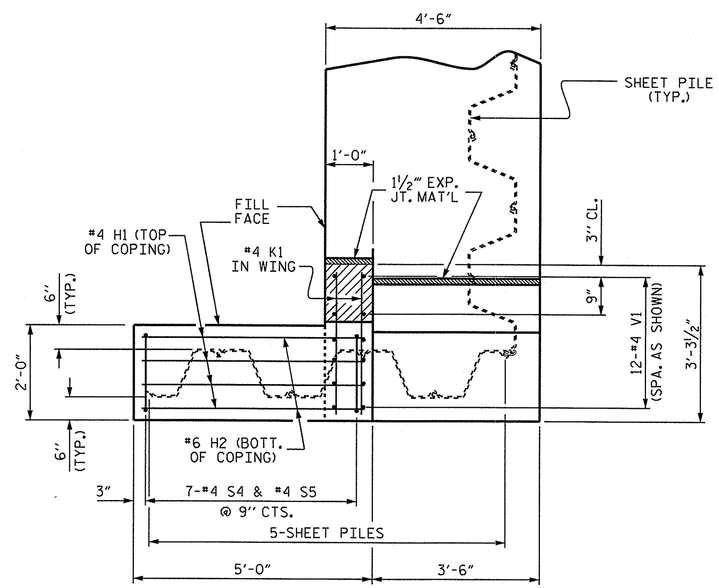

PLAN - COPING (W2)

DRILL 2" Ø MAX. HOLE IN SHEET PILES FOR #9 B1, #5 B2, #4 K1, AND #4 S5 BARS

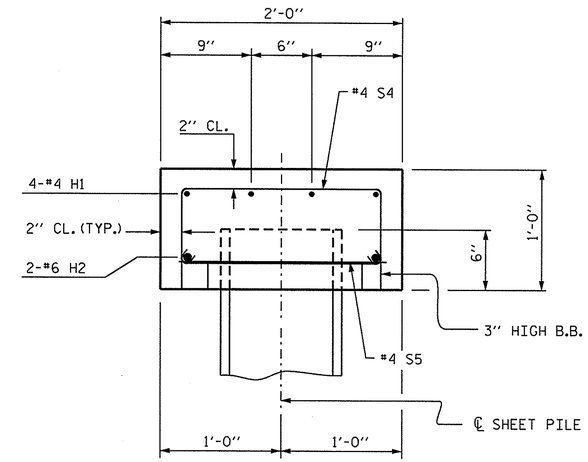

SECTION THRU COPING

DRILL 2" Ø MAX HOLE IN SHEET PILES FOR #4 S5 BAR

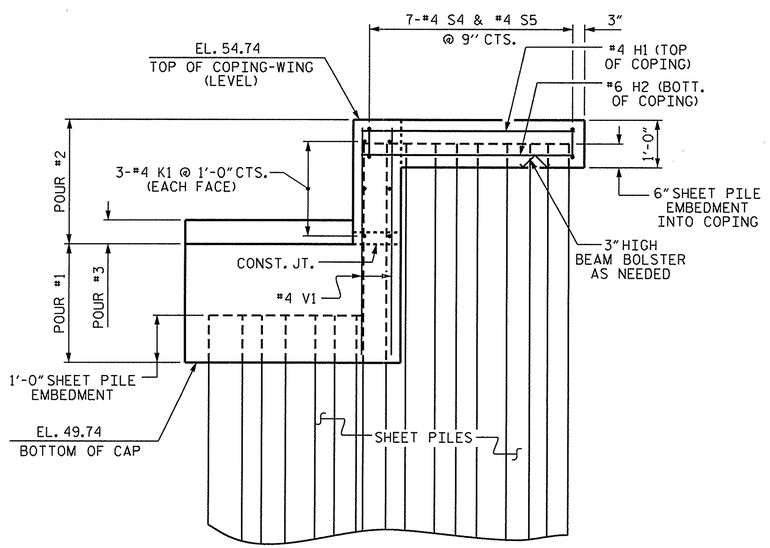

ELEVATION - COPING (W1)

DRILL 2" Ø MAX. HOLE IN SHEET PILES FOR #9 B1, #5 B2, #4 K1, AND #4 S5 BARS
"V" BARS MAY BE SHIFTED SLIGHTLY TO AVOID SHEET PILES

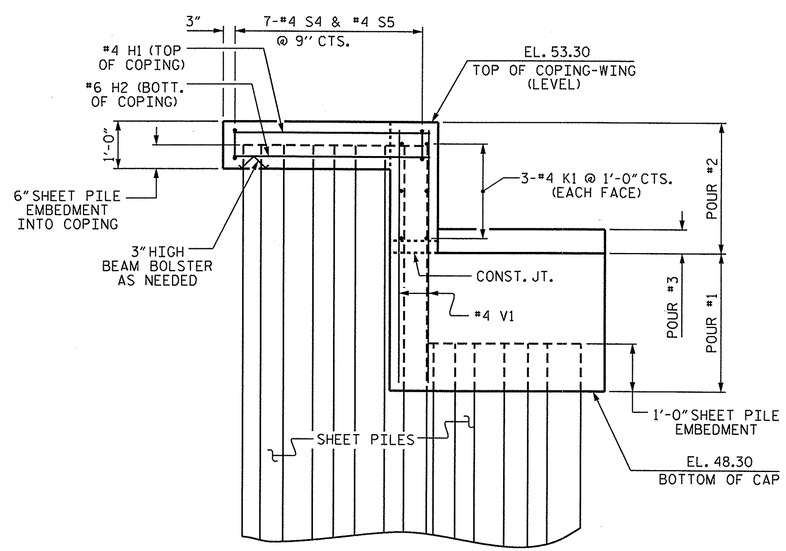

ELEVATION - COPING (W2)

DRILL 2" Ø MAX. HOLE IN SHEET PILES FOR #9 B1, #5 B2, #4 K1, AND #4 S5 BARS
"V" BARS MAY BE SHIFTED SLIGHTLY TO AVOID SHEET PILES

PROJECT NO. 17BP.3.R.41
DUPLIN COUNTY
STATION: 12+67.00 -L-

SHEET 2 OF 3

STATE OF NORTH CAROLINA
DEPARTMENT OF TRANSPORTATION
RALEIGH

SUBSTRUCTURE
END BENT 1

NORTH CAROLINA PROFESSIONAL SEAL 21271 ENGINEER GREGORY W. DICKEY
5/28/14

REVISIONS							SHEET NO.
NO.	BY:	DATE:	NO.	BY:	DATE:		-
1			3				TOTAL SHEETS
2			4				-

DRAWN BY :	P.N.HOLDER	DATE :	03/13/14
CHECKED BY :	M.L.RORIE	DATE :	04/08/14
DESIGN ENGINEER OF RECORD :	P.N.HOLDER	DATE :	03/13/14

28-MAY-2014 12:06
S:\OPGI\Division3\17BP3R41\pnholder\plans\5 piles\17BP3R41_SD_CS_design.dgn
gdickey

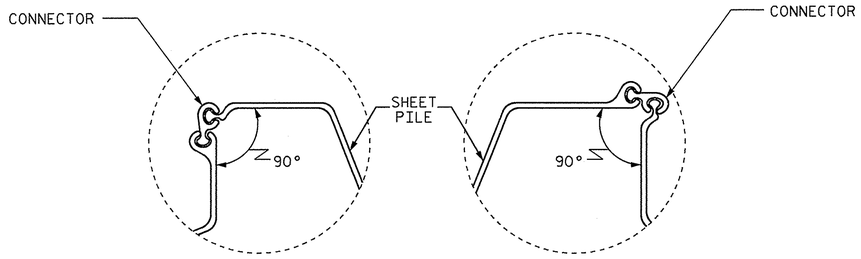

DETAIL A

DETAIL B

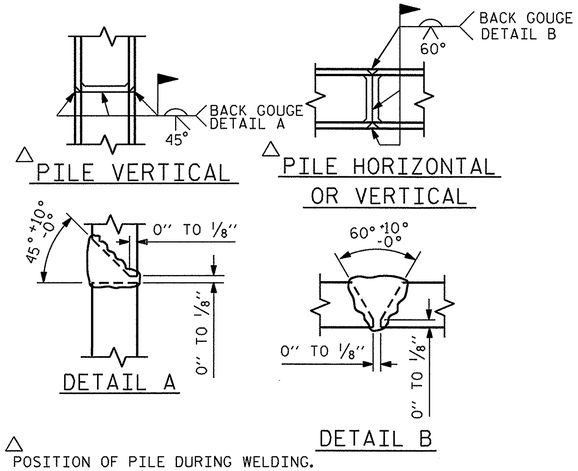

△ PILE VERTICAL

△ PILE HORIZONTAL OR VERTICAL

DETAIL A

DETAIL B

△ POSITION OF PILE DURING WELDING.

PILE SPLICE DETAILS

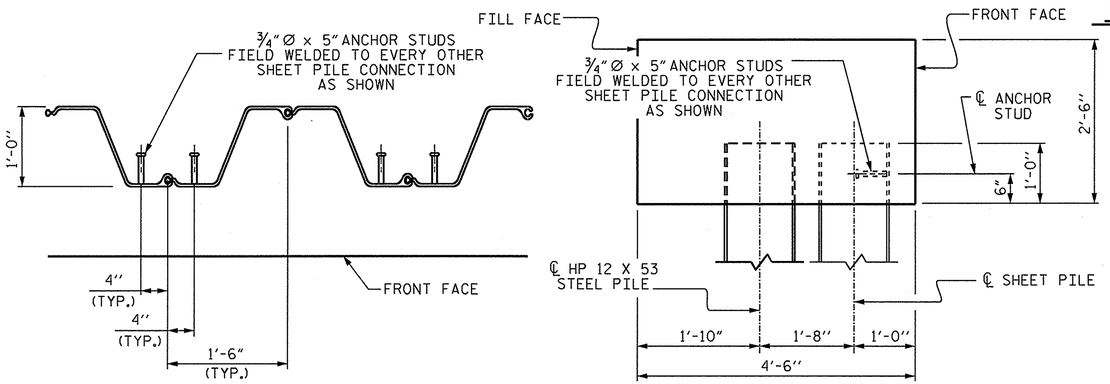

PLAN

SECTION

SPLICE CHART	
#9 B1	8'-9"
#5 B2	3'-0"
#4 B3	2'-5"

SHEET PILE ANCHOR STUD DETAILS

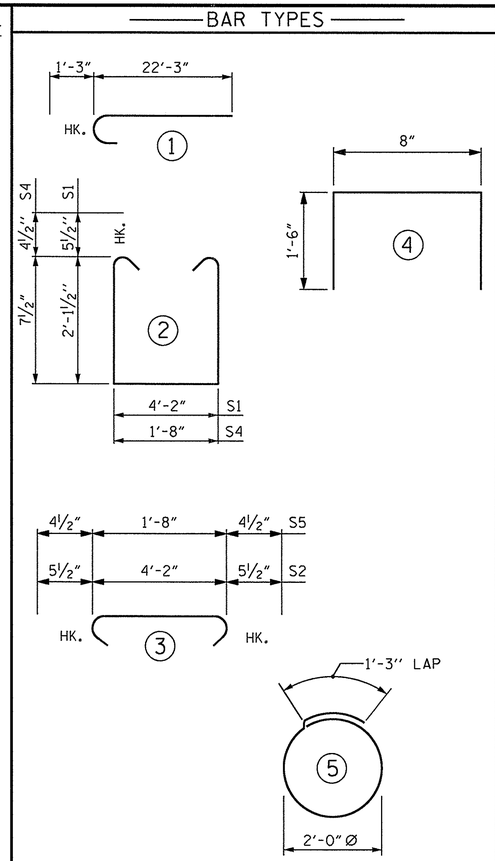

ALL BAR DIMENSIONS ARE OUT TO OUT.

BILL OF MATERIAL

END BENT 1

BAR	NO.	SIZE	TYPE	LENGTH	WEIGHT
B1	20	#9	1	23'-6"	1598
B2	8	#5	STR	19'-4"	161
B3	8	#4	STR	19'-1"	102
B4	9	#4	STR	4'-2"	25
B5	4	#4	STR	3'-2"	8
D1	20	#6	STR	1'-6"	45
H1	8	#4	STR	4'-8"	25
H2	4	#6	STR	4'-8"	28
K1	12	#4	STR	2'-11"	23
S1	34	#5	2	9'-4"	331
S2	34	#5	3	5'-1"	180
S3	10	#4	5	7'-7"	51
S4	14	#4	2	3'-8"	34
S5	14	#4	3	2'-5"	23
U1	8	#4	4	3'-8"	20
V1	24	#4	STR	4'-8"	75

REINFORCING STEEL LBS 2729

CLASS A CONCRETE
POUR 1 : CAP & COLLARS C.Y. 15.9
POUR 2 : (UPPER PART OF WINGS & COPINGS) C.Y. 1.3
POUR 3 : (LATERAL GUIDES) C.Y. 0.1
TOTAL C.Y. 17.3

HP 12 X 53 STEEL PILES
NO. : 5 250 LIN. FT.
PILE REDRIVES EA. 3

STEEL SHEET PILES
No. = 32 SQ. FT. 1981
No. CONNECTOR = 2 SQ. FT. 12
TOTAL NO. = 34 SQ. FT. 1993

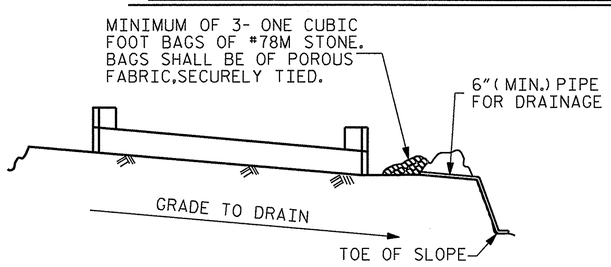

BAGGED STONE AND PIPE SHALL BE PLACED IMMEDIATELY AFTER COMPLETION OF END BENT EXCAVATION. PIPE MAY BE EITHER CONCRETE, CORRUGATED STEEL, CORRUGATED ALUMINUM ALLOY, OR CORRUGATED PLASTIC. PERFORATED PIPE WILL NOT BE ALLOWED.

BAGGED STONE SHALL REMAIN IN PLACE UNTIL THE ENGINEER DIRECTS THAT IT BE REMOVED. THE CONTRACTOR SHALL REMOVE AND DISPOSE OF SILT ACCUMULATIONS AT BAGGED STONE WHEN SO DIRECTED BY THE ENGINEER. BAGS SHALL BE REMOVED AND REPLACED WHENEVER THE ENGINEER DETERMINES THAT THEY HAVE DETERIORATED AND LOST THEIR EFFECTIVENESS.

NO SEPARATE PAYMENT WILL BE MADE FOR THIS WORK AND THE ENTIRE COST OF THIS WORK SHALL BE INCLUDED IN THE UNIT CONTRACT PRICE BID FOR THE SEVERAL PAY ITEMS.

TEMPORARY DRAINAGE AT END BENT

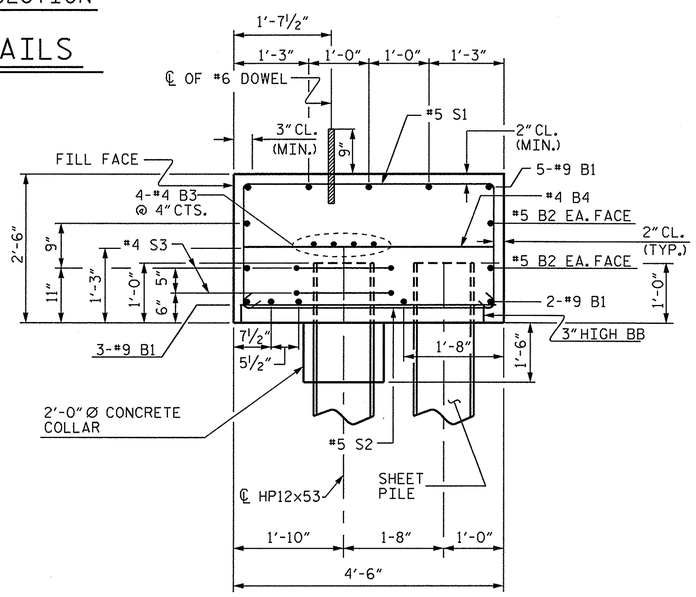

SECTION A-A

DRILL 2" Ø MAX. HOLE IN SHEET PILES FOR #9 B1, #5 B2, AND #5 S2 BARS

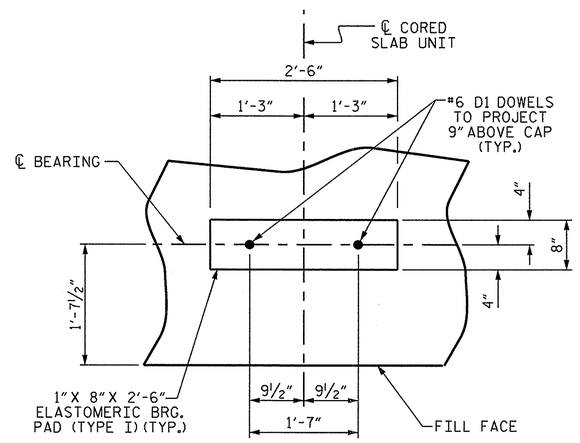

DETAIL C

PROJECT NO. 17BP.3.R.41

DUPLIN COUNTY

STATION: 12+67.00 -L-

SHEET 3 OF 3

STATE OF NORTH CAROLINA
DEPARTMENT OF TRANSPORTATION
RALEIGH

SUBSTRUCTURE
END BENT 1

DRAWN BY : P.N.HOLDER	DATE : 3/13/14	
CHECKED BY : M.L.RORIE	DATE : 04/08/14	
DESIGN ENGINEER OF RECORD : P.N.HOLDER	DATE : 3/13/14	

REVISIONS								SHEET NO.
NO.	BY:	DATE:	NO.	BY:	DATE:			-
1			3					TOTAL SHEETS
2			4					-

CHARLES GREGORY DICKEY PROFESSIONAL SEAL 21271 ENGINEER GREGORY W. DICKEY
5/28/14

28-MAY-2014 12:06
S:\DPGI\Division3\17BP3R41\pnholder\plans\5 piles\17BP3R41_SD_CS_design.dgn
gdickey

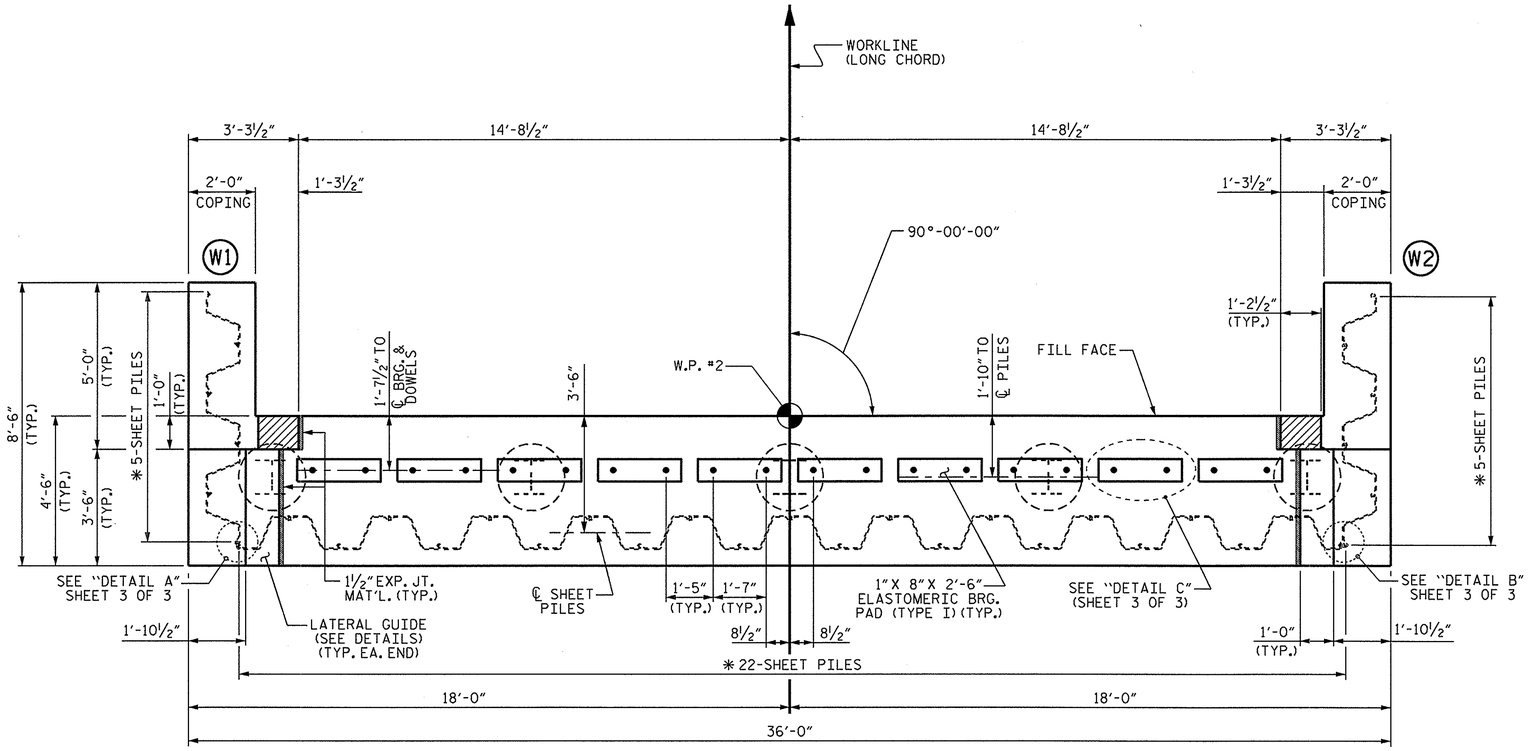

✱MIN. SECTION MODULUS OF 30.2 in/ft.

PLAN

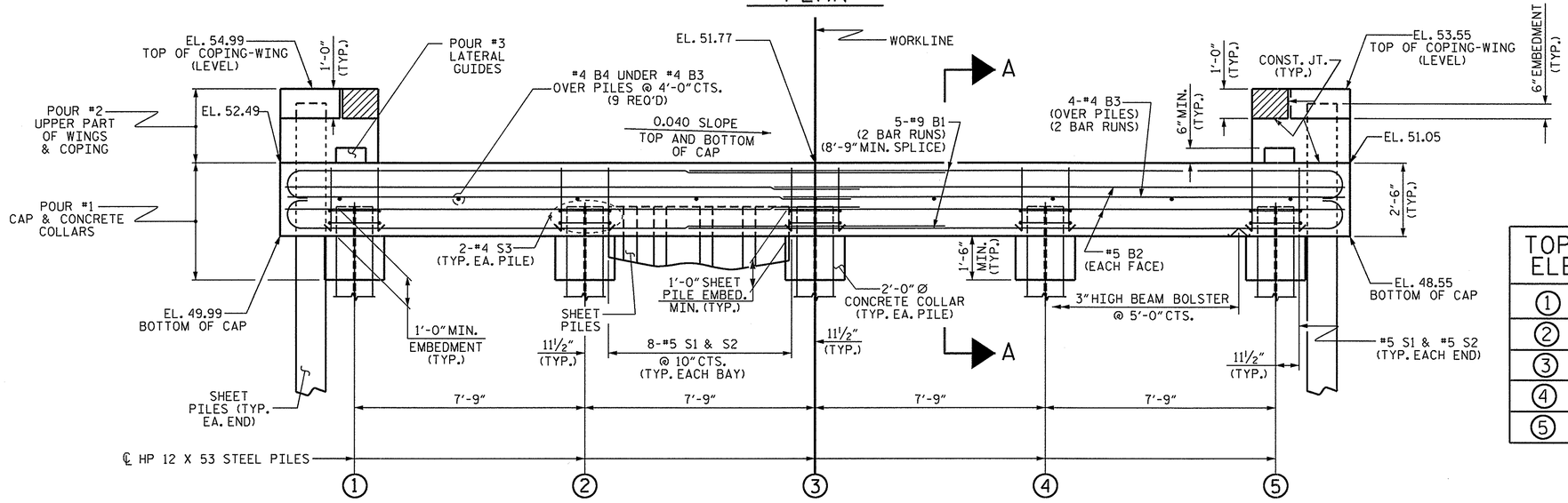

ELEVATION

FOR SECTION A-A, SEE SHEET 3 OF 3.
NOT ALL SHEET PILING SHOWN FOR CLARITY.

NOTES

STIRRUPS IN CAP MAY BE SHIFTED AS NECESSARY TO CLEAR DOWELS.

THE LATERAL GUIDES ARE NOT TO BE POURED UNTIL AFTER THE CORED SLAB UNITS ARE IN PLACE.

THE CONCRETE IN THE SHADED AREA OF THE WING SHALL BE POURED AFTER THE VERTICAL CONCRETE BARRIER RAIL IS CAST IF SLIP FORMING IS USED.

THE CONTRACTOR HAS THE OPTION TO OMIT THE LATERAL GUIDE IF APPROVED BY THE ENGINEER.

INSTALL THE 4"Ø DRAIN PIPE THROUGH THE SHEET PILES AS REQUIRED FOR REINFORCED BRIDGE APPROACH FILLS. SEE THE ROADWAY PLANS.

FOR PILE SPLICE DETAILS, SEE SHEET 3 OF 3.

ALL 2"Ø MAX. HOLES IN STEEL SHEET PILING TO BE DRILLED AND NOT BURNED.

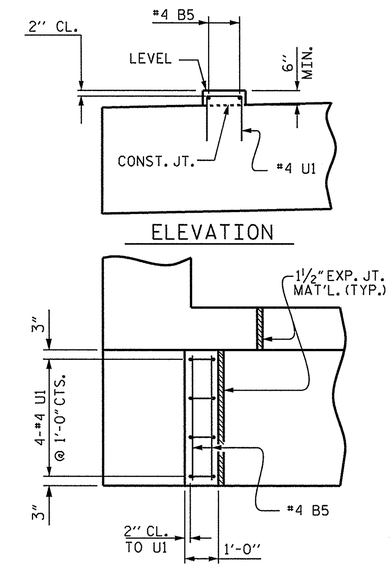

LATERAL GUIDE

(LEFT SIDE SHOWN, RIGHT SIDE SIMILAR)

TOP OF PILE ELEVATIONS	
1	50.91
2	50.60
3	50.29
4	49.98
5	49.67

PROJECT NO. 17.BP.3.R.41
DUPLIN COUNTY
STATION: 12+67.00 -L-

SHEET 1 OF 3

STATE OF NORTH CAROLINA
DEPARTMENT OF TRANSPORTATION
RALEIGH

SUBSTRUCTURE
END BENT 2

NORTH CAROLINA PROFESSIONAL SEAL 21271 ENGINEER GREGORY W. DICKEY
5/28/14

REVISIONS							SHEET NO.
NO.	BY:	DATE:	NO.	BY:	DATE:		-
1			3				TOTAL SHEETS
2			4				-

DRAWN BY : P.N.HOLDER DATE : 03-13-14
CHECKED BY : M.L.RORIE DATE : 04/09/14
DESIGN ENGINEER OF RECORD : P.N.HOLDER DATE : 3/13/14

28-MAY-2014 12:06
S:\DPGI\Division3\17BP3R41\pnholder\plans\5 piles\17BP3R41_SD_CS_design.dgn
gdickey

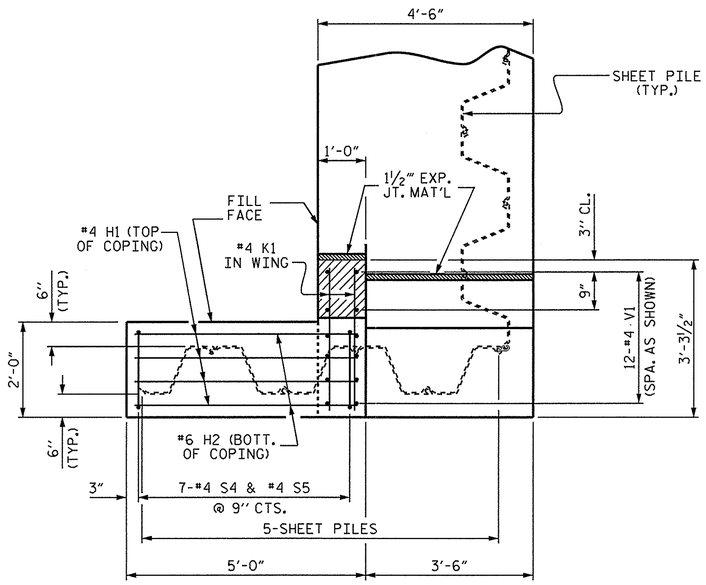

PLAN - COPING (W1)

DRILL 2" Ø MAX. HOLE IN SHEET PILES FOR #9 B1, #5 B2, #4 K1, AND #4 S5 BARS

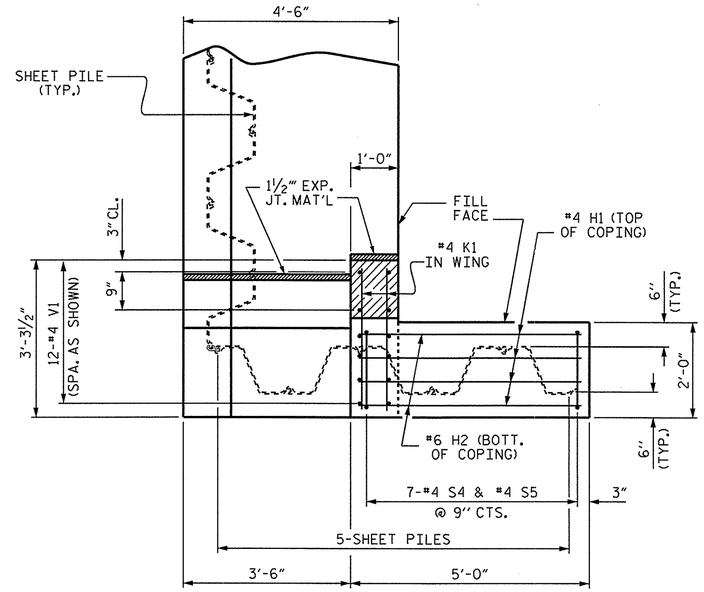

PLAN - COPING (W2)

DRILL 2" Ø MAX. HOLE IN SHEET PILES FOR #9 B1, #5 B2, #4 K1, AND #4 S5 BARS

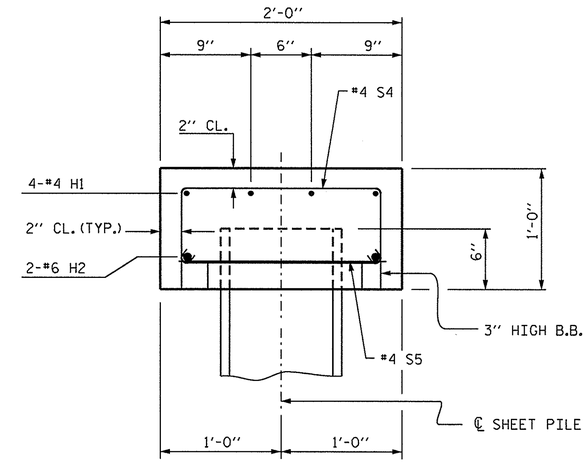

SECTION THRU COPING

DRILL 2" Ø MAX HOLE IN SHEET PILES FOR #4 S5 BAR

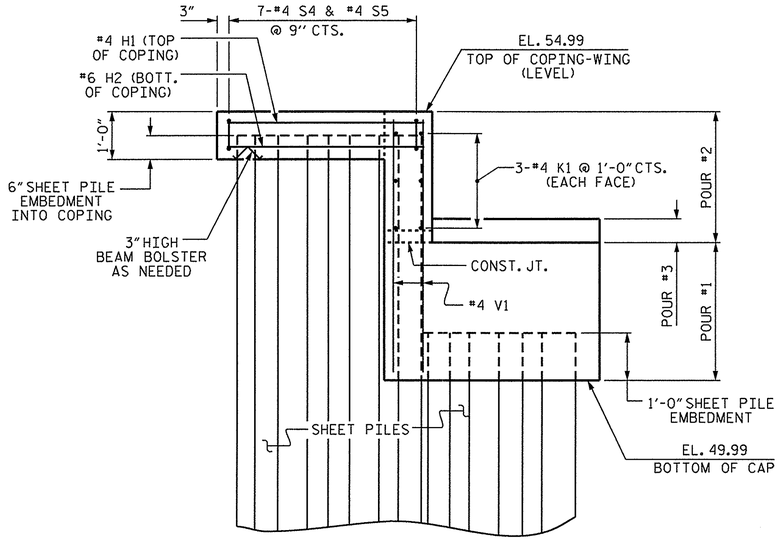

ELEVATION - COPING (W1)

DRILL 2" Ø MAX. HOLE IN SHEET PILES FOR #9 B1, #5 B2, #4 K1, AND #4 S5 BARS
"V" BARS MAY BE SHIFTED SLIGHTLY TO AVOID SHEET PILES

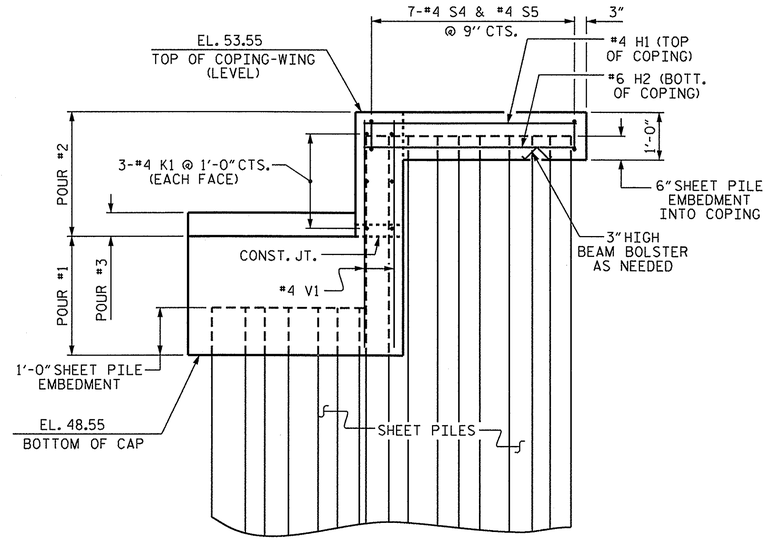

ELEVATION - COPING (W2)

DRILL 2" Ø MAX. HOLE IN SHEET PILES FOR #9 B1, #5 B2, #4 K1, AND #4 S5 BARS
"V" BARS MAY BE SHIFTED SLIGHTLY TO AVOID SHEET PILES

PROJECT NO. 17BP.3.R.41
DUPLIN COUNTY
STATION: 12+67.00 -L-

SHEET 2 OF 3

STATE OF NORTH CAROLINA
DEPARTMENT OF TRANSPORTATION
RALEIGH

SUBSTRUCTURE
END BENT 2

NORTH CAROLINA PROFESSIONAL SEAL 21271 ENGINEER GREGORY W. DICKEY
5/28/14

REVISIONS							SHEET NO.
NO.	BY:	DATE:	NO.	BY:	DATE:		-
1			3				TOTAL SHEETS
2			4				-

DRAWN BY :	P.N.HOLDER	DATE :	03/13/14
CHECKED BY :	M.L.RORIE	DATE :	04/09/14
DESIGN ENGINEER OF RECORD :	P.N.HOLDER	DATE :	3/13/14

28-MAY-2014 12:06
S:\DPG1\Division3\17BP3R41\pnholder\plans\5 piles\17BP3R41_SD_CS_design.dgn
gdickey

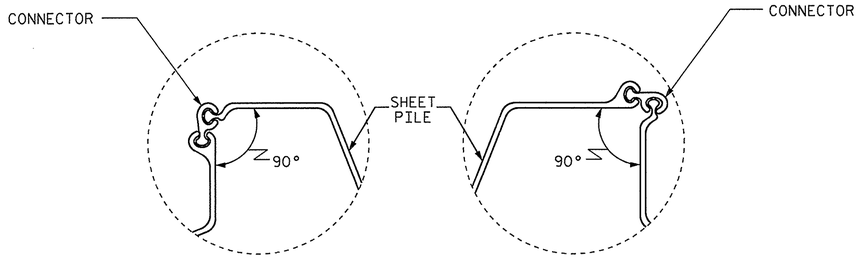

DETAIL A

DETAIL B

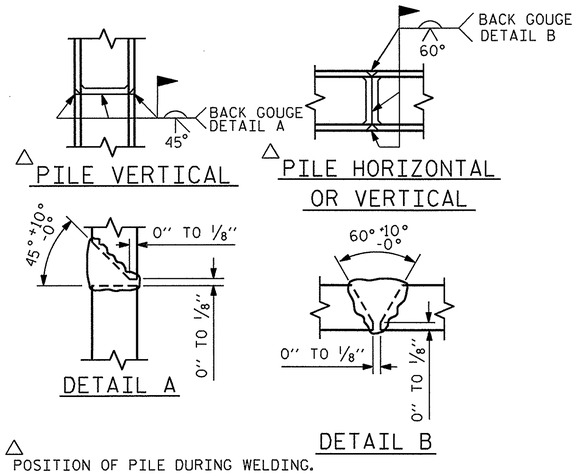

△ PILE VERTICAL

△ PILE HORIZONTAL OR VERTICAL

DETAIL A

DETAIL B

△ POSITION OF PILE DURING WELDING.

PILE SPLICE DETAILS

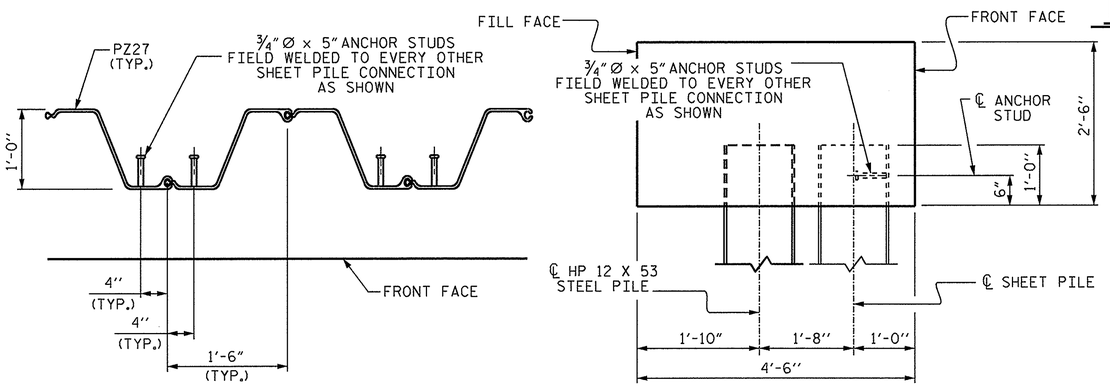

PLAN

SECTION

SHEET PILE ANCHOR STUD DETAILS

SPLICE CHART	
#9 B1	8'-9"
#5 B2	3'-0"
#4 B3	2'-5"

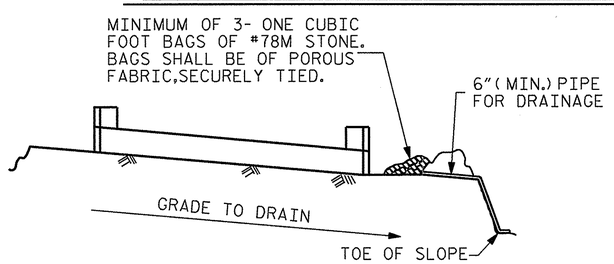

BAGGED STONE AND PIPE SHALL BE PLACED IMMEDIATELY AFTER COMPLETION OF END BENT EXCAVATION. PIPE MAY BE EITHER CONCRETE, CORRUGATED STEEL, CORRUGATED ALUMINUM ALLOY, OR CORRUGATED PLASTIC. PERFORATED PIPE WILL NOT BE ALLOWED.

BAGGED STONE SHALL REMAIN IN PLACE UNTIL THE ENGINEER DIRECTS THAT IT BE REMOVED. THE CONTRACTOR SHALL REMOVE AND DISPOSE OF SILT ACCUMULATIONS AT BAGGED STONE WHEN SO DIRECTED BY THE ENGINEER. BAGS SHALL BE REMOVED AND REPLACED WHENEVER THE ENGINEER DETERMINES THAT THEY HAVE DETERIORATED AND LOST THEIR EFFECTIVENESS.

NO SEPARATE PAYMENT WILL BE MADE FOR THIS WORK AND THE ENTIRE COST OF THIS WORK SHALL BE INCLUDED IN THE UNIT CONTRACT PRICE BID FOR THE SEVERAL PAY ITEMS.

TEMPORARY DRAINAGE AT END BENT

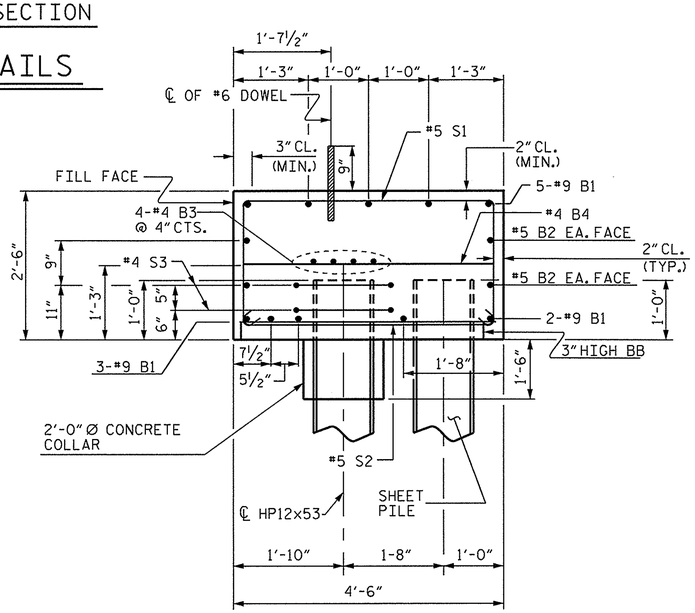

SECTION A-A

DRILL 2" Ø MAX. HOLE IN SHEET PILES FOR #9 B1, #5 B2, AND #5 S2 BARS

BAR TYPES

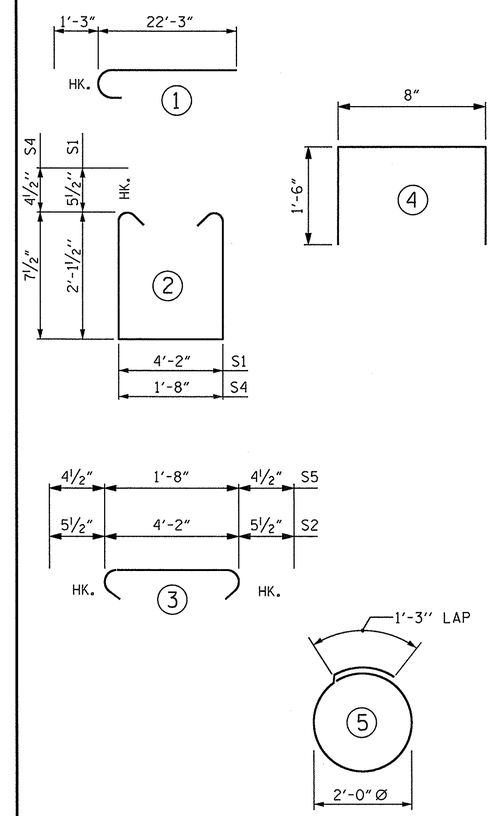

ALL BAR DIMENSIONS ARE OUT TO OUT.

BILL OF MATERIAL

END BENT 2

BAR	NO.	SIZE	TYPE	LENGTH	WEIGHT
B1	20	#9	1	23'-6"	1598
B2	8	#5	STR	19'-4"	161
B3	8	#4	STR	19'-1"	102
B4	9	#4	STR	4'-2"	25
B5	4	#4	STR	3'-2"	8
D1	20	#6	STR	1'-6"	45
H1	8	#4	STR	4'-8"	25
H2	4	#6	STR	4'-8"	28
K1	12	#4	STR	2'-11"	23
S1	34	#5	2	9'-4"	331
S2	34	#5	3	5'-1"	180
S3	10	#4	5	7'-7"	51
S4	14	#4	2	3'-8"	34
S5	14	#4	3	2'-5"	23
U1	8	#4	4	3'-8"	20
V1	24	#4	STR	4'-8"	75

REINFORCING STEEL LBS 2729

CLASS A CONCRETE
POUR 1 : CAP & COLLARS C.Y. 15.9
POUR 2 : (UPPER PART OF WINGS & COPINGS) C.Y. 1.3
POUR 3 : (LATERAL GUIDES) C.Y. 0.1
TOTAL C.Y. 17.3

HP 12 X 53 STEEL PILES
NO. : 5 250 LIN. FT.
PILE REDRIVES EA. 3

STEEL SHEET PILES
No. = 32 SQ. FT. 1981
No. CONNECTOR = 2 SQ. FT. 12
TOTAL NO. = 34 SQ. FT. 1993

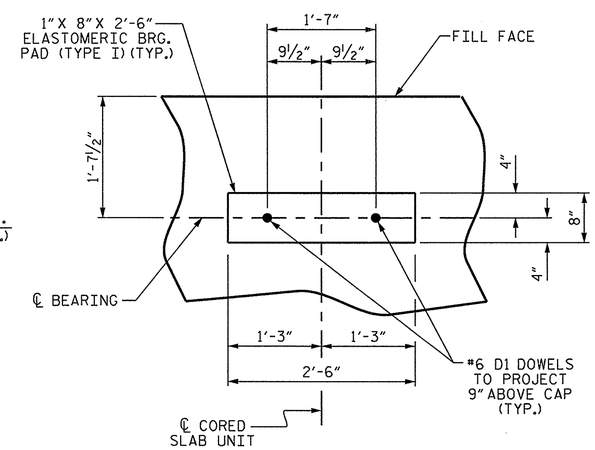

DETAIL C

PROJECT NO. 17BP.3.R.41
DUPLIN COUNTY
STATION: 12+67.00 -L-

SHEET 3 OF 3

STATE OF NORTH CAROLINA
DEPARTMENT OF TRANSPORTATION
RALEIGH

SUBSTRUCTURE
END BENT 2

NORTH CAROLINA PROFESSIONAL SEAL 21271 ENGINEER GREGORY W. DICKEY
5-28-14

REVISIONS							SHEET NO.
NO.	BY:	DATE:	NO.	BY:	DATE:		-
1			3				TOTAL SHEETS
2			4				-

DRAWN BY : P.N.HOLDER DATE : 03/13/14
CHECKED BY : M.L.RORIE DATE : 04/09/14
DESIGN ENGINEER OF RECORD : P.N.HOLDER DATE : 3/13/14

28-MAY-2014 12:06
S:\DPGI\Division3\17BP3R41\pnholder\plans\5 piles\17BP3R41_SD_CS_design.dgn
gdickey

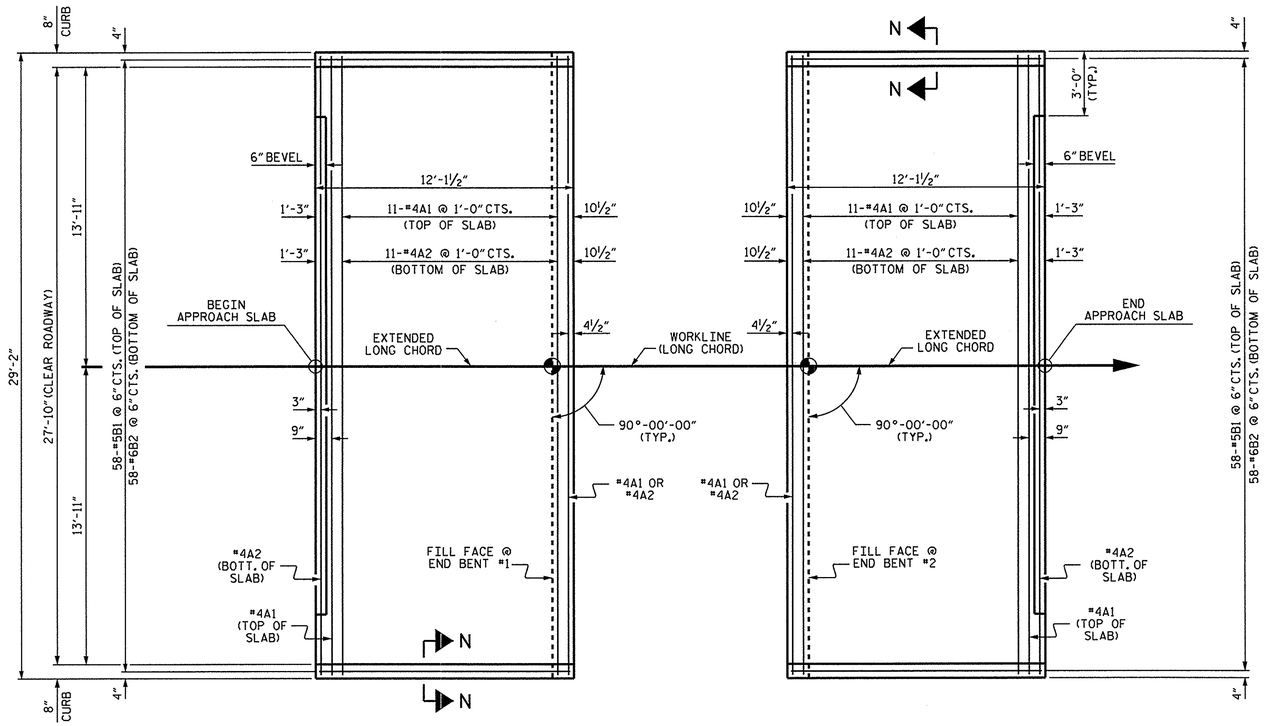

PLAN @ END BENT #1 PLAN @ END BENT #2

DIMENSIONS SHOWN ARE TYPICAL FOR BOTH APPROACH SLABS

NOTES

FOR REINFORCED BRIDGE APPROACH FILL INCLUDING GEOTEXTILE, IMPERMEABLE GEOMEMBRANE, 4" Ø DRAINAGE PIPE, #78M STONE, AND SELECT MATERIAL, SEE ROADWAY PLANS.

AREA BETWEEN THE WINGWALL AND APPROACH SLAB SHALL BE GRADED TO DRAIN THE WATER AWAY FROM THE FILL FACE OF THE BRIDGE AND SHALL BE PAVED. SEE ROADWAY PLANS.

APPROACH SLAB GROOVING IS NOT REQUIRED.

BILL OF MATERIAL

APPROACH SLAB AT EB #1

BAR	NO.	SIZE	TYPE	LENGTH	WEIGHT
* A1	13	#4	STR	28'-10"	250
A2	13	#4	STR	28'-10"	250
* B1	58	#5	STR	11'-2"	676
B2	58	#6	STR	11'-8"	1016
REINFORCING STEEL				LBS.	1266
* EPOXY COATED REINFORCING STEEL				LBS.	926
CLASS AA CONCRETE				C. Y.	16.9

APPROACH SLAB AT EB #2

BAR	NO.	SIZE	TYPE	LENGTH	WEIGHT
* A1	13	#4	STR	28'-10"	250
A2	13	#4	STR	28'-10"	250
* B1	58	#5	STR	11'-2"	676
B2	58	#6	STR	11'-8"	1016
REINFORCING STEEL				LBS.	1266
* EPOXY COATED REINFORCING STEEL				LBS.	926
CLASS AA CONCRETE				C. Y.	16.9

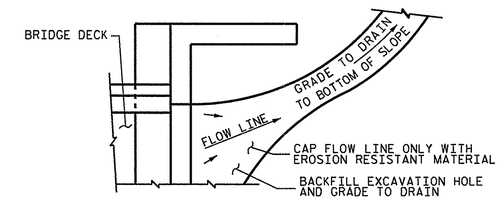

NOTE: IF THE APPROACH SLAB IS NOT CONSTRUCTED IMMEDIATELY AFTER THE BACKFILLING OF THE END BENT EXCAVATION, GRADE TO DRAIN TO THE BOTTOM OF THE SLOPE AND PROVIDE EROSION RESISTANT MATERIAL, SUCH AS FIBERGLASS ROVING OR AS DIRECTED BY THE ENGINEER TO PREVENT SOIL EROSION AND TO PROTECT THE AREA ADJACENT TO THE STRUCTURE. THE CONTRACTOR WILL BE REQUIRED TO REMOVE THESE MATERIALS PRIOR TO CONSTRUCTION OF THE APPROACH SLAB.

TEMPORARY DRAINAGE DETAIL

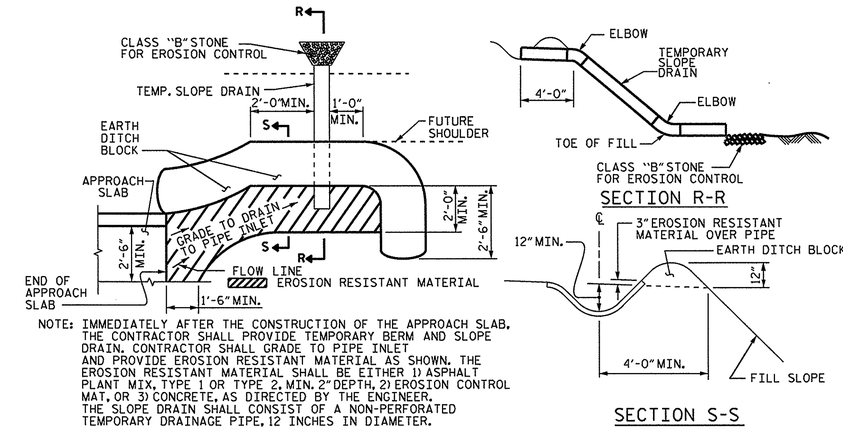

NOTE: IMMEDIATELY AFTER THE CONSTRUCTION OF THE APPROACH SLAB, THE CONTRACTOR SHALL PROVIDE TEMPORARY BERM AND SLOPE DRAIN. CONTRACTOR SHALL GRADE TO PIPE INLET AND PROVIDE EROSION RESISTANT MATERIAL AS SHOWN. THE EROSION RESISTANT MATERIAL SHALL BE EITHER 1) ASPHALT PLANT MIX, TYPE 1 OR TYPE 2, MIN. 2" DEPTH, 2) EROSION CONTROL MAT, OR 3) CONCRETE, AS DIRECTED BY THE ENGINEER. THE SLOPE DRAIN SHALL CONSIST OF A NON-PERFORATED TEMPORARY DRAINAGE PIPE, 12 INCHES IN DIAMETER.

PLAN VIEW

TEMPORARY BERM AND SLOPE DRAIN DETAILS

(TO BE USED WHEN SHOULDER BERM GUTTER IS REQUIRED)

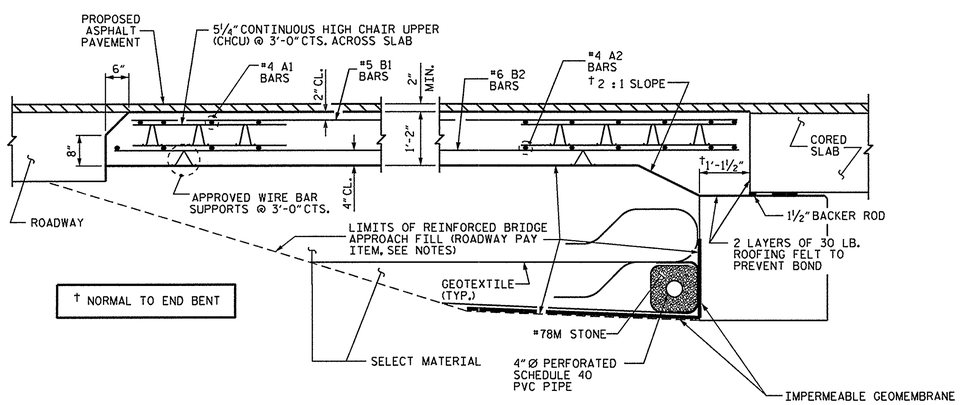

† NORMAL TO END BENT

SECTION THRU SLAB

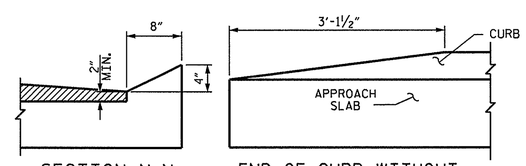

SECTION N-N END OF CURB WITHOUT SHOULDER BERM GUTTER

CURB DETAILS

SPLICE LENGTHS		
BAR SIZE	EPOXY COATED	UNCOATED
#4	2'-0"	1'-9"
#5	2'-6"	2'-2"
#6	3'-10"	2'-7"

PROJECT NO. 17BP.3.R.41

DUPLIN COUNTY

STATION: 12+67.00 -L-

STATE OF NORTH CAROLINA
DEPARTMENT OF TRANSPORTATION
RALEIGH

STANDARD
BRIDGE APPROACH SLAB
FOR PRESTRESSED CONCRETE
CORED SLAB UNIT

90° SKEW

REVISIONS							SHEET NO.
NO.	BY:	DATE:	NO.	BY:	DATE:		-
1			3				TOTAL SHEETS
2			4				-

ASSEMBLED BY : P.N.HOLDER	DATE : 03/17/14
CHECKED BY : M.L.RORIE	DATE : 04/09/14
DRAWN BY : SHS/MAA 5-09	REV. 12-11 MAA/AAC
CHECKED BY : BCH 5-09	

28-MAY-2014 12:06
S:\DPGI\Division3\17BP3R41\pnholder\plans\5 plles\17BP3R41_SD_CS_design.dgn
gdickey

STD. NO. BAS_30_90S

STANDARD NOTES

DESIGN DATA:

SPECIFICATIONS	A.A.S.H.T.O. (CURRENT)
LIVE LOAD	SEE PLANS
IMPACT ALLOWANCE	SEE A.A.S.H.T.O.
STRESS IN EXTREME FIBER OF	
STRUCTURAL STEEL - AASHTO M270 GRADE 36	20,000 LBS. PER SQ. IN.
- AASHTO M270 GRADE 50W	27,000 LBS. PER SQ. IN.
- AASHTO M270 GRADE 50	27,000 LBS. PER SQ. IN.
REINFORCING STEEL IN TENSION	
GRADE 60	24,000 LBS. PER SQ. IN.
CONCRETE IN COMPRESSION	1,200 LBS. PER SQ. IN.
CONCRETE IN SHEAR	SEE A.A.S.H.T.O.
STRUCTURAL TIMBER - TREATED OR	
UNTREATED - EXTREME FIBER STRESS	1,800 LBS. PER SQ. IN.
COMPRESSION PERPENDICULAR TO GRAIN OF TIMBER	375 LBS. PER SQ. IN.
EQUIVALENT FLUID PRESSURE OF EARTH	30 LBS. PER CU. FT. (MINIMUM)

MATERIAL AND WORKMANSHIP:

EXCEPT AS MAY OTHERWISE BE SPECIFIED ON PLANS OR IN THE SPECIAL PROVISIONS, ALL MATERIAL AND WORKMANSHIP SHALL BE IN ACCORDANCE WITH THE 2012 "STANDARD SPECIFICATIONS FOR ROADS AND STRUCTURES" OF THE N. C. DEPARTMENT OF TRANSPORTATION.

STEEL SHEET PILING FOR PERMANENT OR TEMPORARY APPLICATIONS SHALL BE HOT ROLLED.

CONCRETE:

UNLESS OTHERWISE REQUIRED ON PLANS, CLASS A CONCRETE SHALL BE USED FOR ALL PORTIONS OF ALL STRUCTURES WITH THE EXCEPTION THAT: CLASS AA CONCRETE SHALL BE USED IN BRIDGE SUPERSTRUCTURES, ABUTMENT BACKWALLS, AND APPROACH SLABS; AND CLASS B CONCRETE SHALL BE USED FOR SLOPE PROTECTION AND RIP RAP.

CONCRETE CHAMFERS:

UNLESS OTHERWISE NOTED ON THE PLANS, ALL EXPOSED CORNERS ON STRUCTURES SHALL BE CHAMFERED 3/4" WITH THE FOLLOWING EXCEPTIONS: TOP CORNERS OF CURBS MAY BE ROUNDED TO 1-1/2" RADIUS WHICH IS BUILT INTO CURB FORMS; CORNERS OF TRANSVERSE FLOOR EXPANSION JOINTS SHALL BE ROUNDED WITH A 1/4" FINISHING TOOL UNLESS OTHERWISE REQUIRED ON PLANS; AND CORNERS OF EXPANSION JOINTS IN THE ROADWAY FACES AND TOPS OF CURBS AND SIDEWALKS SHALL BE ROUNDED TO A 1/4" RADIUS WITH A FINISHING STONE OR TOOL UNLESS OTHERWISE REQUIRED ON PLANS.

DOWELS:

DOWELS WHEN INDICATED ON PLANS AS FOR CULVERT EXTENSIONS, SHALL BE EMBEDDED AT LEAST 12" INTO THE OLD CONCRETE AND GROUTED INTO PLACE WITH 1:2 CEMENT MORTAR.

ALLOWANCE FOR DEAD LOAD DEFLECTION, SETTLEMENT, ETC. IN CASTING SUPERSTRUCTURES:

BRIDGES SHALL BE BUILT ON THE GRADE OR VERTICAL CURVE SHOWN ON PLANS. SLABS, CURBS AND PARAPETS SHALL CONFORM TO THE GRADE OR CURVE.

ALL DIMENSIONS WHICH ARE GIVEN IN SECTION AND ARE AFFECTED BY DEAD LOAD DEFLECTIONS ARE DIMENSIONS AT CENTER LINE OF BEARING UNLESS OTHERWISE NOTED ON PLANS. IN SETTING FORMS FOR STEEL BEAM BRIDGES AND PRESTRESSED CONCRETE GIRDER BRIDGES, ADJUSTMENTS SHALL BE MADE DUE TO THE DEAD LOAD DEFLECTIONS FOR THE ELEVATIONS SHOWN. WHERE BLOCKS ARE SHOWN OVER BEAMS FOR BUILDING UP TO THE SLAB, THE VERTICAL DIMENSIONS OF THE BLOCKS SHALL BE ADJUSTED BETWEEN BEARINGS TO COMPENSATE FOR DEAD LOAD DEFLECTIONS, VERTICAL CURVE ORDINATE, AND ACTUAL BEAM CAMBER. WHERE BOTTOM OF SLAB IS IN LINE WITH BOTTOM OF TOP FLANGES, DEPTH OF SLAB BETWEEN BEARINGS SHALL BE ADJUSTED TO COMPENSATE FOR DEAD LOAD DEFLECTION, VERTICAL CURVE ORDINATE, AND ACTUAL BEAM CAMBER.

IN SETTING FALSEWORK AND FORMS FOR REINFORCED CONCRETE SPANS, AN ALLOWANCE SHALL BE MADE FOR DEAD LOAD DEFLECTIONS, SETTLEMENT OF FALSEWORK, AND PERMANENT CAMBER WHICH SHALL BE PROVIDED FOR IN ADDITION TO THE ELEVATIONS SHOWN. AFTER REMOVAL OF THE FALSEWORK, THE FINISHED STRUCTURES SHALL CONFORM TO THE PROFILE AND ELEVATIONS SHOWN ON THE PLANS AND CONSTRUCTION ELEVATIONS FURNISHED BY THE ENGINEER.

DETAILED DRAWINGS FOR FALSEWORK OR FORMS FOR BRIDGE SUPERSTRUCTURE AND ANY STRUCTURE OR PARTS OF A STRUCTURE AS NOTED ON THE PLANS SHALL BE SUBMITTED TO THE ENGINEER FOR APPROVAL BEFORE CONSTRUCTION OF THE FALSEWORK OR FORMS IS STARTED.

REINFORCING STEEL:

ALL REINFORCING STEEL SHALL BE DEFORMED. DIMENSIONS RELATIVE TO PLACEMENT OF REINFORCING ARE TO CENTERS OF BARS UNLESS OTHERWISE INDICATED IN THE PLANS. DIMENSIONS ON BAR DETAILS ARE TO CENTERS OF BARS OR ARE OUT TO OUT AS INDICATED ON PLANS.

WIRE BAR SUPPORTS SHALL BE PROVIDED FOR REINFORCING STEEL WHERE INDICATED ON THE PLANS. WHEN BAR SUPPORT PIECES ARE PLACED IN CONTINUOUS LINES, THEY SHALL BE SO PLACED THAT THE ENDS OF THE SUPPORTING WIRES SHALL BE LAPPED TO LOCK LEGS ON ADJOINING PIECES.

STRUCTURAL STEEL:

AT THE CONTRACTOR'S OPTION, HE MAY SUBSTITUTE 7/8" Ø SHEAR STUDS FOR THE 3/4" Ø STUDS SPECIFIED ON THE PLANS. THIS SUBSTITUTION SHALL BE MADE AT THE RATE OF 3 - 7/8" Ø STUDS FOR 4 - 3/4" Ø STUDS, AND STUD SPACING CHANGES SHALL BE MADE AS NECESSARY TO PROVIDE THE SAME EQUIVALENT NUMBER OF 7/8" Ø STUDS ALONG THE BEAM AS SHOWN FOR 3/4" Ø STUDS BASED ON THE RATIO OF 3 - 7/8" Ø STUDS FOR 4 - 3/4" Ø STUDS. STUDS OF THE LENGTH SPECIFIED ON THE PLANS MUST BE PROVIDED. THE MAXIMUM SPACING SHALL BE 2'-0".

EXCEPT AT THE INTERIOR SUPPORTS OF CONTINUOUS BEAMS WHERE THE COVER PLATE IS IN CONTACT WITH BEARING PLATE, THE CONTRACTOR MAY, AT HIS OPTION, SUBSTITUTE FOR THE COVER PLATES DESIGNATED ON THE PLANS COVER PLATES OF THE EQUIVALENT AREA PROVIDED THESE PLATES ARE AT LEAST 5/16" IN THICKNESS AND DO NOT EXCEED A WIDTH EQUAL TO THE FLANGE WIDTH LESS 2" OR A THICKNESS EQUAL TO 2 TIMES THE FLANGE THICKNESS. THE SIZE OF FILLET WELDS SHALL CONFORM TO THE REQUIREMENTS OF THE CURRENT ANSI/AASHTO/AWS "BRIDGE WELDING CODE". ELECTROSLAG WELDING WILL NOT BE PERMITTED.

WITH THE SOLE EXCEPTION OF EDGES AT SURFACES WHICH BEAR ON OTHER SURFACES, ALL SHARP EDGES AND ENDS OF SHAPES AND PLATES SHALL BE SLIGHTLY ROUNDED BY SUITABLE MEANS TO A RADIUS OF APPROXIMATELY 1/16 INCH OR EQUIVALENT FLAT SURFACE AT A SUITABLE ANGLE PRIOR TO PAINTING, GALVANIZING, OR METALLIZING.

HANDRAILS AND POSTS:

METAL STANDARDS AND FACES OF THE CONCRETE END POSTS FOR THE METAL RAIL SHALL BE SET NORMAL TO THE GRADE OF THE CURB, UNLESS OTHERWISE SHOWN ON PLANS. THE METAL RAIL AND TOPS OF CONCRETE POSTS USED WITH THE ALUMINUM RAIL SHALL BE BUILT PARALLEL TO THE GRADE OF THE CURB.

METAL HANDRAILS SHALL BE IN ACCORDANCE WITH THE PLANS. RAILS SHALL BE AS MANUFACTURED FOR BRIDGE RAILING. CASTINGS SHALL BE OF A UNIFORM APPEARANCE. FINS AND OTHER DEFORMATIONS RESULTING FROM CASTING OR OTHERWISE SHALL BE REMOVED IN A MANNER SO THAT A UNIFORM COLORING OF THE COMPLETED CASTING SHALL BE OBTAINED. CASTINGS WITH DISCOLORATIONS OR OF NON-UNIFORM COLORING WILL NOT BE ACCEPTED. CERTIFIED MILL REPORTS ARE REQUIRED FOR METAL RAILS AND POSTS.

SPECIAL NOTES:

GENERALLY, IN CASE OF DISCREPANCY, THIS STANDARD SHEET OF NOTES SHALL GOVERN OVER THE SPECIFICATIONS, BUT THE REMAINDER OF THE PLANS SHALL GOVERN OVER NOTES HEREON, AND SPECIAL PROVISIONS SHALL GOVERN OVER ALL. SEE SPECIFICATIONS ARTICLE 105-4.

ENGLISH

JANUARY, 1990