09/28/99

TIP PROJECT: W-5203D

CONTRACT: DC00081

See Sheet 1-A For Index of Sheets

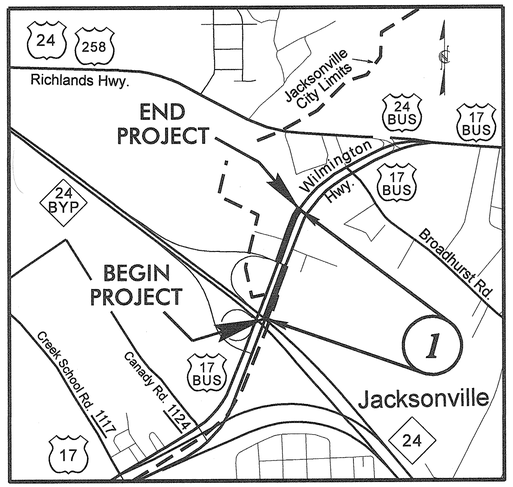

STATE OF NORTH CAROLINA
DIVISION OF HIGHWAYS

ONSLOW COUNTY

STATE	STATE PROJECT REFERENCE NO.	SHEET NO.	TOTAL SHEETS
N.C.	W-5203D	1	

STATE PROJ. NO.	F.A. PROJ. NO.	DESCRIPTION
45333.1.4	HSIP-0017(118)	P.E.
45333.3.4	HSIP-0017(118)	CONSTRUCTION

LOCATION: *US 17 BUS (WILMINGTON HIGHWAY) FROM NC 24 OVERPASS TO 0.21 MILES SOUTH OF BROADHURST ROAD IN THE CITY OF JACKSONVILLE*

TYPE OF WORK: *GRADING, DRAINAGE, WIDENING, GUARDRAIL, SIGNALS, PAVEMENT MARKINGS & MARKERS, ETC. TO INSTALL OFFSET LEFT TURN LANES*

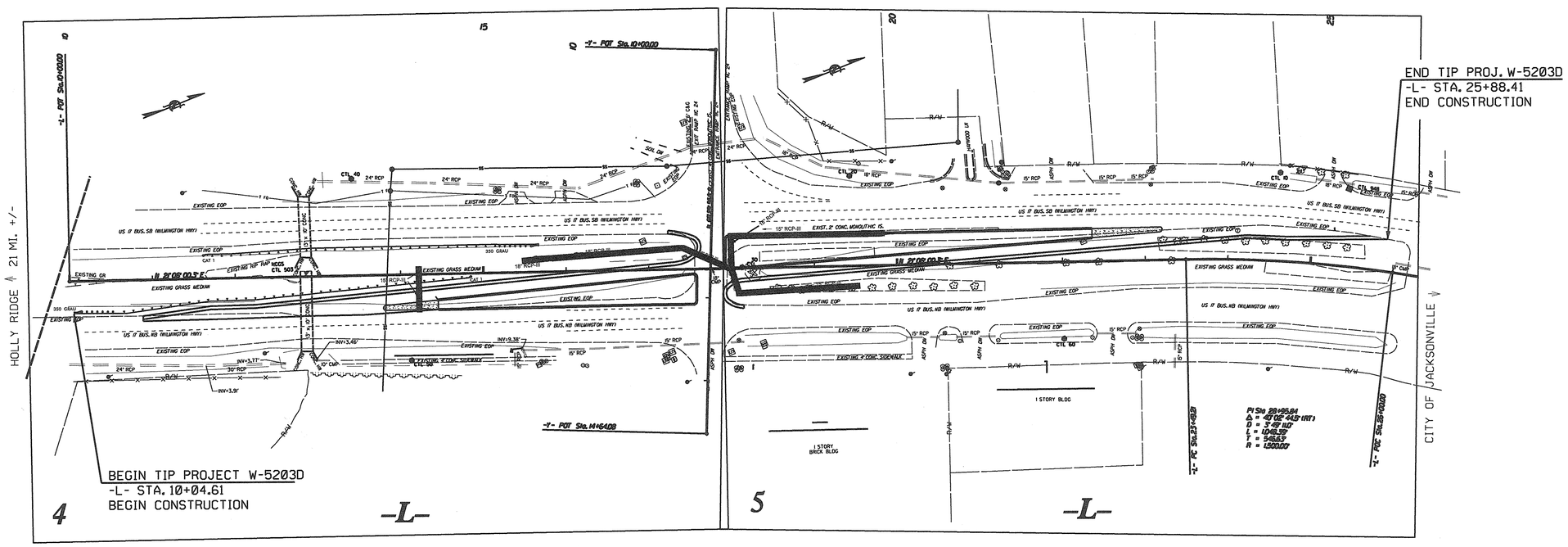

NOT TO SCALE

GRAPHIC SCALES

PLANS: 0 30 60

PROFILE (HORIZONTAL): 0 20 40

PROFILE (VERTICAL): 0 5 10

DESIGN DATA

ADT 2012	=	17,000
ADT 2035	=	33,500
DHV	=	10%
D	=	55%
T	=	11% *
V	=	60 MPH

* TTST 5% DUAL 6%

PROJECT LENGTH

MAP NO. 1 = 0.300 MI.

TOTAL = 0.300 MI.

Prepared In the Office of:

DIVISION OF HIGHWAYS

5501 Barbados Blvd., Castle Hayne, NC 28429

2012 STANDARD SPECIFICATIONS

RIGHT OF WAY DATE:

LETTING DATE:

DAVID B. LEONARD
PROJECT ENGINEER

MPK
PROJECT DESIGN TECHNICIAN

DNL

DIVISION OF HIGHWAYS
STATE OF NORTH CAROLINA

NORTH CAROLINA PROFESSIONAL SEAL 037439 ENGINEER DAVID B. LEONARD

DIVISION DESIGN ENGINEER 1/20/15

15-JAN-2015 10:56
O:\RDY\DONE\ONSLOW\W-5203D_45333.1.4_OS LEFTS JVILLE DIST\ROADWAY\Proj\Plansheets\W-5203D_Rdy_tsh.dgn
mkimmel AT D3CA027445O

NORTH CAROLINA PROFESSIONAL SEAL 037439 ENGINEER DAVID B. LEONARD

DIVISION DESIGN ENGINEER 1/22/15

GENERAL NOTES:

2012 SPECIFICATIONS
EFFECTIVE: 01-17-12
REVISED: 11/01/11

GRADING AND SURFACING OR RESURFACING AND WIDENING:

THE GRADE LINES SHOWN DENOTE THE FINISHED ELEVATION OF THE PROPOSED SURFACING AT GRADE POINTS SHOWN ON THE TYPICAL SECTIONS. WHERE NO GRADE LINES ARE SHOWN, THE PROFILES SHOWN DENOTE THE TOP ELEVATION OF THE EXISTING PAVEMENT ALONG THE CENTER LINE OF SURVEY ON WHICH THE PROPOSED RESURFACING WILL BE PLACED. GRADE LINES MAY BE ADJUSTED BY THE ENGINEER IN ORDER TO SECURE A PROPER TIE-IN.

CLEARING:

CLEARING ON THIS PROJECT SHALL BE PERFORMED TO THE LIMITS ESTABLISHED BY METHOD II.

GUARDRAIL:

THE GUARDRAIL LOCATIONS SHOWN ON THE PLANS MAY BE ADJUSTED DURING CONSTRUCTION AS DIRECTED BY THE ENGINEER. THE CONTRACTOR SHOULD CONSULT WITH THE ENGINEER PRIOR TO ORDERING GUARDRAIL MATERIAL.

UTILITIES:

ANY RELOCATION OF EXISTING UTILITIES WILL BE ACCOMPLISHED BY OTHERS.
UTILITY CONTACTS ON THIS PROJECT ARE:

POWER - JONES-ONSLOW (KEN JONES 910-389-1784)
DUKE ENERGY (WAYNE AYCOCK 910-620-1487)
WATER - ONWASA (KAREN FERGASON 910-937-7546)
TELEPHONE - CENTURY LINK (ANTHONY MELILI 910-577-9359)
CABLE - TIME WARNER (VINCE BRAYBOY 252-241-4378)
MCNC (PETER VALENTINE 919-248-1464)

INDEX OF SHEETS

SHEET NUMBER	SHEET
1	TITLE SHEET, ALIGNMENT AND SHEET LAYOUT
1-A	INDEX OF SHEETS, GENERAL NOTES AND LIST OF STANDARD DRAWINGS
1-B	CONVENTIONAL SYMBOLS
1-C & 1-D	SURVEY CONTROL SHEET
2 THRU 2-O	PAVEMENT SCHEDULE, TYPICAL SECTIONS AND PROJECT DETAILS
3-A THRU 3-C	DRAINAGE, GUARDRAIL, EARTHWORK AND GEOTECHNICAL SUMMARIES
4 THRU 6	PLAN & PROFILE SHEETS
PM-1 THRU PM-3	PAVEMENT MARKING LAYOUT SHEET & PAVEMENT MARKING PLANS
EC-1 THRU EC-3	EROSION CONTROL PLANS
SIG-1.0 THRU SIG-1.2 SIG.M-1 THRU SIG.M-9	SIGNAL PLANS & DETAILS
X-1A	CROSS-SECTION SUMMARY SHEET
X-1 THRU X-12	CROSS-SECTIONS

EFF. 01-17-2012
REV. 10-30-2012

2012 ROADWAY ENGLISH STANDARD DRAWINGS

The following Roadway Standards as appear in "Roadway Standard Drawings" Highway Design Branch - N. C. Department of Transportation - Raleigh, N. C., Dated January, 2012 are applicable to this project and by reference hereby are considered a part of these plans:

STD.NO.	TITLE
DIVISION 2 - EARTHWORK	
200.02	Method of Clearing - Method II
DIVISION 3 - PIPE CULVERTS	
300.01	Method of Pipe Installation
DIVISION 6 - ASPHALT BASES AND PAVEMENTS	
654.01	Pavement Repairs
DIVISION 8 - INCIDENTALS	
815.02	Subsurface Drain
840.00	Concrete Base Pad for Drainage Structures
840.14	Concrete Drop Inlet - 12" thru 30" Pipe
840.15	Brick Drop Inlet - 12" thru 30" Pipe
840.16	Drop Inlet Frame and Grates - for use with Std. Dwg 840.14 and 840.15
840.18	Concrete Grated Drop Inlet Type 'B' - 12" thru 36" Pipe
840.24	Frames and Narrow Slot Sag Grates
840.27	Brick Grated Drop Inlet Type 'B' - 12" thru 36" Pipe
840.31	Concrete Junction Box - 12" thru 66" Pipe
840.32	Brick Junction Box - 12" thru 66" Pipe
840.45	Precast Drainage Structure
840.54	Manhole Frame and Cover
840.66	Drainage Structure Steps
840.71	Concrete and Brick Pipe Plug
846.01	Concrete Curb, Gutter and Curb & Gutter
852.01	Concrete Islands
852.04	Method for Placement of Drop Inlets in Grassed Median - Using 1'-6" Curb and Gutter
862.01	Guardrail Placement
862.02	Guardrail Installation
876.02	Guide for Rip Rap at Pipe Outlets
876.04	Drainage Ditches with Class 'B' Rip Rap
1261.01	Guardrail and Barrier Delineators - Installation Spacing
1261.02	Guardrail and Barrier Delineators - Types and Mounting
1262.01	Guardrail End Delineation

8/17/99
22-JAN-2015 12:01
B:\BY DONE\ONSLOW\W-5203D_45333_1_4_OS LEFTS JVILLE DIST\ROADWAY\Proj\Plansheets\W-5203D_Rdy_tsh.dgn
mkimmel AT DOA\D2744450

09/08/09

PROJECT REFERENCE NO.	SHEET NO.
W-5203D	1-B

Note: Not to Scale

****S.U.E. = Subsurface Utility Engineering***

STATE OF NORTH CAROLINA
DIVISION OF HIGHWAYS

CONVENTIONAL PLAN SHEET SYMBOLS

BOUNDARIES AND PROPERTY:

- State Line
- County Line
- Township Line
- City Line
- Reservation Line
- Property Line
- Existing Iron Pin — EIP
- Property Corner
- Property Monument — ECM
- Parcel/Sequence Number — 123
- Existing Fence Line
- Proposed Woven Wire Fence
- Proposed Chain Link Fence
- Proposed Barbed Wire Fence
- Existing Wetland Boundary — WLB
- Proposed Wetland Boundary — WLB
- Existing Endangered Animal Boundary — EAB
- Existing Endangered Plant Boundary — EPB

BUILDINGS AND OTHER CULTURE:

- Gas Pump Vent or U/G Tank Cap
- Sign — S
- Well — W
- Small Mine
- Foundation
- Area Outline
- Cemetery
- Building
- School
- Church
- Dam

HYDROLOGY:

- Stream or Body of Water
- Hydro, Pool or Reservoir
- Jurisdictional Stream — JS
- Buffer Zone 1 — BZ 1
- Buffer Zone 2 — BZ 2
- Flow Arrow
- Disappearing Stream
- Spring
- Wetland
- Proposed Lateral, Tail, Head Ditch — FLOW
- False Sump

RAILROADS:

- Standard Gauge — CSX TRANSPORTATION
- RR Signal Milepost — MILEPOST 35
- Switch — SWITCH
- RR Abandoned
- RR Dismantled

RIGHT OF WAY:

- Baseline Control Point
- Existing Right of Way Marker
- Existing Right of Way Line
- Proposed Right of Way Line — RW
- Proposed Right of Way Line with Iron Pin and Cap Marker — RW
- Proposed Right of Way Line with Concrete or Granite Marker — RW
- Existing Control of Access — CA
- Proposed Control of Access — CA
- Existing Easement Line — E
- Proposed Temporary Construction Easement — E
- Proposed Temporary Drainage Easement — TDE
- Proposed Permanent Drainage Easement — PDE
- Proposed Permanent Drainage / Utility Easement — DUE
- Proposed Permanent Utility Easement — PUE
- Proposed Temporary Utility Easement — TUE
- Proposed Permanent Easement with Iron Pin and Cap Marker

ROADS AND RELATED FEATURES:

- Existing Edge of Pavement
- Existing Curb
- Proposed Slope Stakes Cut — C
- Proposed Slope Stakes Fill — F
- Proposed Wheel Chair Ramp — WCR
- Existing Metal Guardrail
- Proposed Guardrail
- Existing Cable Guiderail
- Proposed Cable Guiderail
- Equality Symbol
- Pavement Removal

VEGETATION:

- Single Tree
- Single Shrub
- Hedge
- Woods Line
- Orchard
- Vineyard — Vineyard

EXISTING STRUCTURES:

MAJOR:

- Bridge, Tunnel or Box Culvert — CONC
- Bridge Wing Wall, Head Wall and End Wall — CONC WW

MINOR:

- Head and End Wall — CONC HW
- Pipe Culvert
- Footbridge
- Drainage Box: Catch Basin, DI or JB — CB
- Paved Ditch Gutter
- Storm Sewer Manhole — S
- Storm Sewer — S

UTILITIES:

POWER:

- Existing Power Pole
- Proposed Power Pole
- Existing Joint Use Pole
- Proposed Joint Use Pole
- Power Manhole — P
- Power Line Tower
- Power Transformer
- U/G Power Cable Hand Hole — HH
- H-Frame Pole
- Recorded U/G Power Line — P
- Designated U/G Power Line (S.U.E.*) — P

TELEPHONE:

- Existing Telephone Pole
- Proposed Telephone Pole
- Telephone Manhole — T
- Telephone Booth
- Telephone Pedestal — T
- Telephone Cell Tower
- U/G Telephone Cable Hand Hole — HH
- Recorded U/G Telephone Cable — T
- Designated U/G Telephone Cable (S.U.E.*) — T
- Recorded U/G Telephone Conduit — TC
- Designated U/G Telephone Conduit (S.U.E.*) — TC
- Recorded U/G Fiber Optics Cable — T FO
- Designated U/G Fiber Optics Cable (S.U.E.*) — T FO

WATER:

- Water Manhole — W
- Water Meter
- Water Valve
- Water Hydrant
- Recorded U/G Water Line — W
- Designated U/G Water Line (S.U.E.*) — W
- Above Ground Water Line — A/G Water

TV:

- TV Satellite Dish
- TV Pedestal — C
- TV Tower
- U/G TV Cable Hand Hole — HH
- Recorded U/G TV Cable — TV
- Designated U/G TV Cable (S.U.E.*) — TV
- Recorded U/G Fiber Optic Cable — TV FO
- Designated U/G Fiber Optic Cable (S.U.E.*) — TV FO

GAS:

- Gas Valve
- Gas Meter
- Recorded U/G Gas Line — G
- Designated U/G Gas Line (S.U.E.*) — G
- Above Ground Gas Line — A/G Gas

SANITARY SEWER:

- Sanitary Sewer Manhole
- Sanitary Sewer Cleanout
- U/G Sanitary Sewer Line — SS
- Above Ground Sanitary Sewer — A/G Sanitary Sewer
- Recorded SS Forced Main Line — FSS
- Designated SS Forced Main Line (S.U.E.*) — FSS

MISCELLANEOUS:

- Utility Pole
- Utility Pole with Base
- Utility Located Object
- Utility Traffic Signal Box — S
- Utility Unknown U/G Line — ?UTL
- U/G Tank; Water, Gas, Oil
- A/G Tank; Water, Gas, Oil
- U/G Test Hole (S.U.E.*)
- Abandoned According to Utility Records — AATUR
- End of Information — E.O.I.

CONTROL AND ALIGNMENT DESCRIPTIONS

Beginning chain L1 description

Point 3999 N 365,799.7090 E 2,463,470.7565 Sta 9+52.00

Course from 3999 to 4000 N 21° 06' 00.30" E Dist 48.0000

Point 4000 N 365,844.4907 E 2,463,488.0364 Sta 10+00.00

Course from 4000 to PC L1C1 N 21° 06' 00.30" E Dist 1,349.2069

Curve Data

Curve L1C1

P.I. Station 28+95.84 N 367,613.2203 E 2,464,170.5353

Delta = 40° 02' 44.54" (RT)
Degree = 3° 49' 10.99"
Tangent = 546.6330
Length = 1,048.3941

Radius = 1,500.0000
External = 96.4986

Mid. Ord. = 90.6658
Long Chord = 1,027.1848

P.C. Station 23+49.21 N 367,103.2374 E 2,463,973.7484

P.T. Station 33+97.60 N 367,877.0158 E 2,464,649.3041

C.C. N 366,563.2401 E 2,465,373.1779

Back = N 21° 06' 00.30" E
Ahead = N 61° 08' 44.85" E
Chord Bear = N 41° 07' 22.57" E

Course from PT L1C1 to 4002 N 61° 08' 44.85" E Dist 77.9905

Point 4002 N 367,914.6527 E 2,464,717.6121 Sta 34+75.59

Ending chain L1 description

CONTROL POINTS

Point	North	Easting	Elevation	Feature
10	367,248.9271	2,463,920.1488	21.2786	4017
20	366,764.7599	2,463,726.4817	16.9073	4017
30	366,603.2737	2,463,779.8172	16.3766	4017
40	366,206.3088	2,463,502.3182	10.6036	4017
50	366,191.2492	2,463,733.1489	10.6292	4017
60	366,931.1147	2,464,006.9951	20.8276	4017
503	366,112.9023	2,463,586.8424	7.6893	4015
948	367,318.8766	2,463,969.5680	22.0519	4017

8/17/99
REVISIONS
19-FEB-2013 11:53
R:\RDY\DONE_CONSLOW\OFFSET LEFTS_AT DISTRICT OFFICE\ROADWAY\Proj\W-5203D_Rdy_tsh.dgn
mkrumel A3 (13.00x25.75)

ALIGNMENT –L1A_CG_LT– AND –L1B_CG_RT– DESCRIPTIONS

Beginning chain L1A_CG_LT description

Point 7102 N 366,223.8993 E 2,463,669.5383 Sta 14+19.42

Course from 7102 to 7103 N 16° 23' 34.08" E Dist 335.5290

Point 7103 N 366,545.7888 E 2,463,764.2316 Sta 17+54.95

Ending chain L1A_CG_LT description

Beginning chain L1B_CG_RT description

Point 7116 N 366,545.9891 E 2,463,763.5881 Sta 17+53.57

Course from 7116 to 7117 N 17° 17' 23.07" E Dist 42.8206

Point 7117 N 366,586.8748 E 2,463,776.3146 Sta 17+96.39

Course from 7117 to 7118 N 17° 17' 23.07" E Dist 473.8454

Point 7118 N 367,039.3091 E 2,463,917.1433 Sta 22+70.24

Course from 7118 to 7119 N 10° 58' 54.87" W Dist 7.9260

Point 7119 N 367,047.0899 E 2,463,915.6334 Sta 22+78.16

Course from 7119 to 7120 N 19° 02' 12.94" E Dist 10.9443

Point 7120 N 367,057.4357 E 2,463,919.2032 Sta 22+89.11

Course from 7120 to 7121 N 17° 57' 45.01" E Dist 29.7680

Point 7121 N 367,085.7528 E 2,463,928.3835 Sta 23+18.87

Course from 7121 to 7122 N 19° 23' 50.22" E Dist 96.4559

Point 7122 N 367,176.7337 E 2,463,960.4181 Sta 24+15.33

Course from 7122 to 7123 N 19° 23' 50.22" E Dist 27.6997

Point 7123 N 367,202.8611 E 2,463,969.6176 Sta 24+43.03

Course from 7123 to 7124 N 25° 28' 55.89" E Dist 56.4509

Point 7124 N 367,253.8204 E 2,463,993.9045 Sta 24+99.48

Course from 7124 to 7125 N 28° 27' 39.54" E Dist 52.6720

Point 7125 N 367,300.1266 E 2,464,019.0059 Sta 25+52.15

Course from 7125 to 7126 N 32° 39' 31.78" E Dist 58.9880

Point 7126 N 367,349.7885 E 2,464,050.8379 Sta 26+11.14

Ending chain L1B_CG_RT description

8/17/99
REVISIONS
27-MAY-2014 15:02
R:\RDY_DONE_CONSLOW\W-5203D_45333.1.4_OS LEFTS JVILLE DIST\ROADWAY\Proj\Plansheets\W-5203D_Rdy_tsh.dgn
pkumar At 1:1,0.0224,0.0

PROJECT REFERENCE NO.	SHEET NO.
W-5203D	2

NORTH CAROLINA PROFESSIONAL SEAL 037439 ENGINEER DAVID B. LEONARD

DIVISION DESIGN ENGINEER 1/29/15

US 17 BUS (WILMINGTON HWY.)

SOUTHBOUND

–L– STA. 17+92.45 TO 22+36.23

NORTHBOUND

–L– STA. 13+78.72 TO 14+45.03

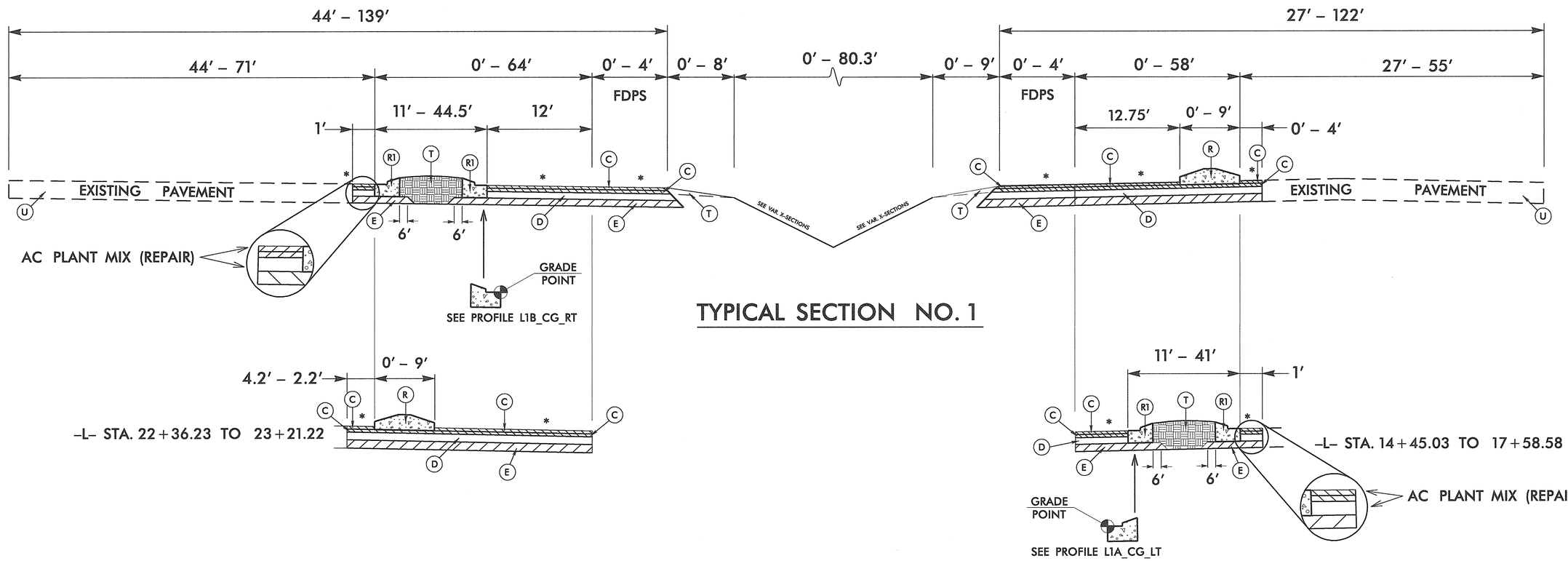

PAVEMENT SCHEDULE			
C	PROP. APPROX. 1 1/2″ DEPTH ASPHALT CONCRETE SURFACE COURSE, TYPE S9.5C, AT AN AVERAGE RATE OF 168 LBS. PER SQ.YD.	R1	PROP. 1′ 6″ CONCRETE CURB & GUTTER
D	PROP. APPROX. 4″ ASPHALT CONCRETE INTERMEDIATE COURSE, TYPE I19.0C, AT AN AVERAGE RATE OF 456 LBS. PER SQ.YD.	T	EARTH MATERIAL
E	PROP. APPROX. 4.5″ ASPHALT CONCRETE BASE COURSE, TYPE B25.0C, AT AN AVERAGE RATE OF 513 LBS. PER SQ.YD.	U	EXISTING PAVEMENT
R	PROP. 5″ MONOLITHIC CONC.ISLAND (KEYED IN)	V	MILLING BITUMINOUS PAVEMENT 1½″ DEPTH

NOTE: PAVEMENT EDGE SLOPES ARE 1:1 UNLESS SHOWN OTHERWISE.
SEE STD. DRAWING 1205.01, SHEET 2 OF 2, TABLE 1 FOR EDGE LINE OFFSETS.

* SEE PLAN SHEETS FOR SUPERELEVATION

REVISIONS

8/17/99

09-JAN-2015 14:51
C:\DOCUMENTS AND SETTINGS\ONSLOW\W-52030_45333.1.4_GS LEFTS_JVILLE DIST\ROADWAY\Proj\Plansheets\W-52030_Rdy_typ.dgn
mkimmel AT 13CAD27445-02

PROJECT REFERENCE NO.	SHEET NO.
W-5203D	2-A

NORTH CAROLINA PROFESSIONAL SEAL 037439 ENGINEER DAVID B. LEONARD

DIVISION DESIGN ENGINEER 1/20/15

US 17 BUS (WILMINGTON HWY.)

INTERSECTION ONLY

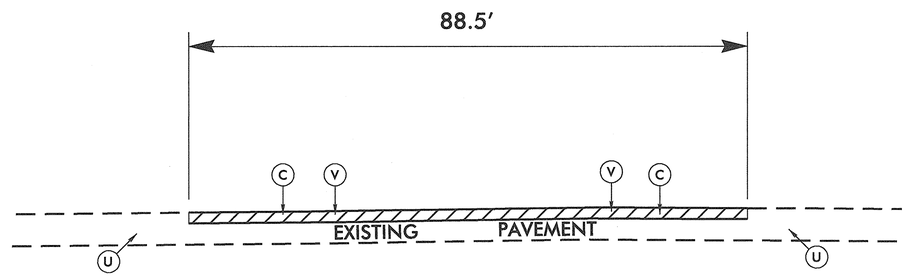

TYPICAL SECTION NO. 2

MAP NO. 1

-L1- STA. 17+58.58 TO 17+91.59

PAVEMENT SCHEDULE	
C	1½" S9.5C
U	EXIST. PAVEMENT
V	MILL 1½"

REVISIONS

8/17/99

09-JAN-2015 14:22
d:\ady_done\cnslow\w-5203d_45333_1_4_os lefts_jville_dist\roadway\proj\plansheets\w-5203d_rdy_typ.dgn
pbkumar) at n3c20d274450

PROJECT REFERENCE NO.	SHEET NO.
W-5203D	2-B

NORTH CAROLINA PROFESSIONAL SEAL 037439 ENGINEER DAVID B. LEONARD

DIVISION DESIGN ENGINEER 1/20/15

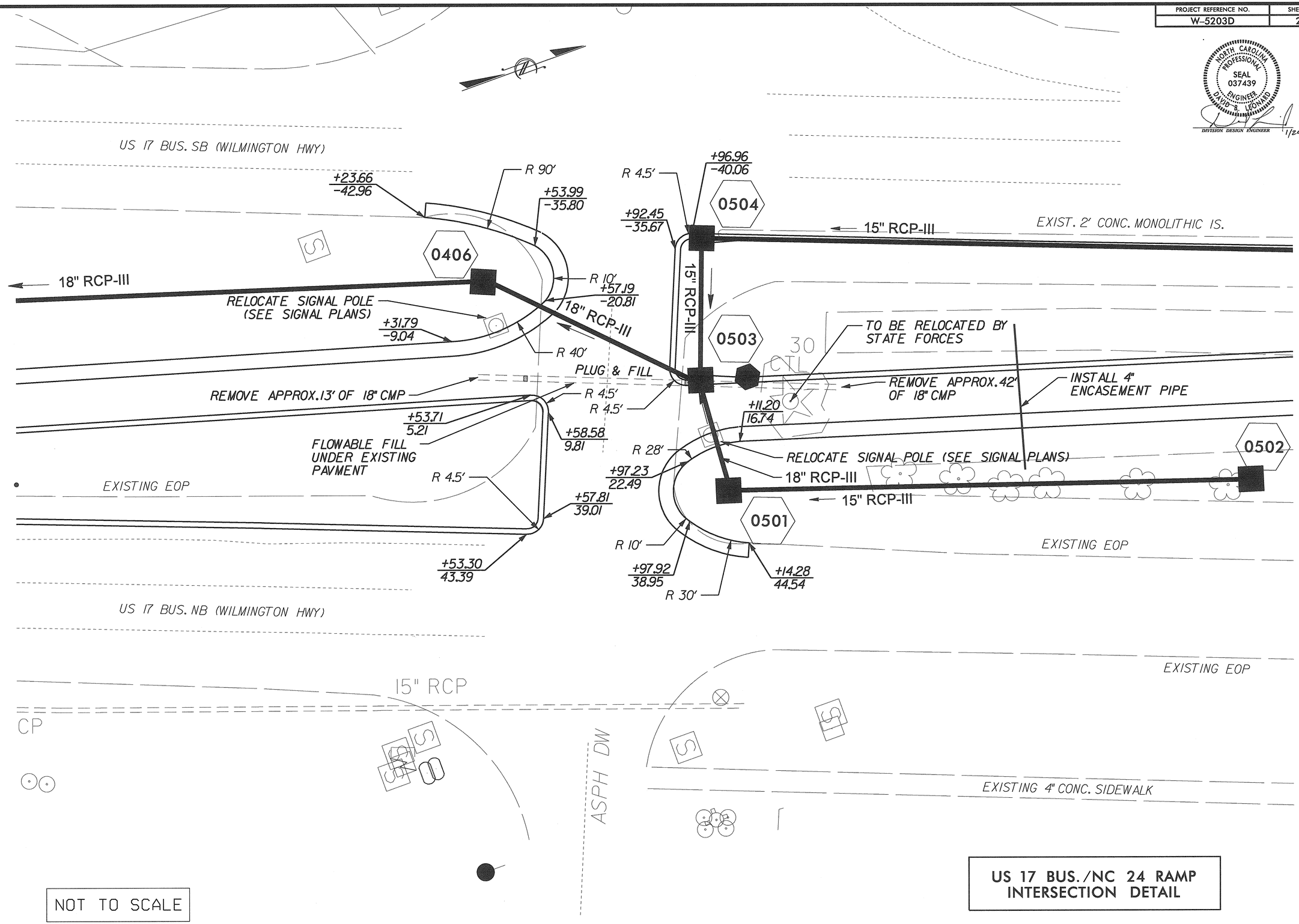

NOT TO SCALE

US 17 BUS./NC 24 RAMP
INTERSECTION DETAIL

REVISIONS

8/17/99

03-JAN-2015 14:26
C:\DGN\ZONE_01\SLOW\W-5203D_45333.1.4.OS LEFTS_JVILLE DIST\ROADWAY\Proj\Plansheets\W-5203D_Rdy_dtl_INTERSECTION_DETAIL.dgn
pkramer

NOTES:
1) DETAIL DOES NOT APPLY TO OGAFC AND ULTRA-THIN BONDED WEARING COURSE.
2) BACKFILL SHOULDER WITH APPROVED MATERIAL.
3) THE SHOULDER WEDGE DEVICE MAY BE DISENGAGED AT PAVED DRIVEWAYS AND SIDE STREETS.

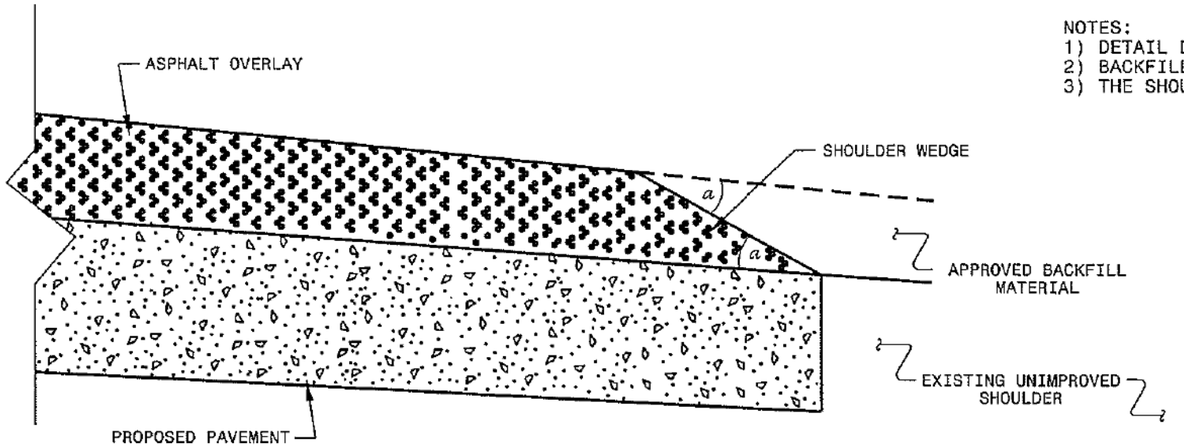

SHOULDER WEDGE DETAIL

(Resurfacing Projects w/ Widening or with Existing Paved Shoulder having no dropoffs)

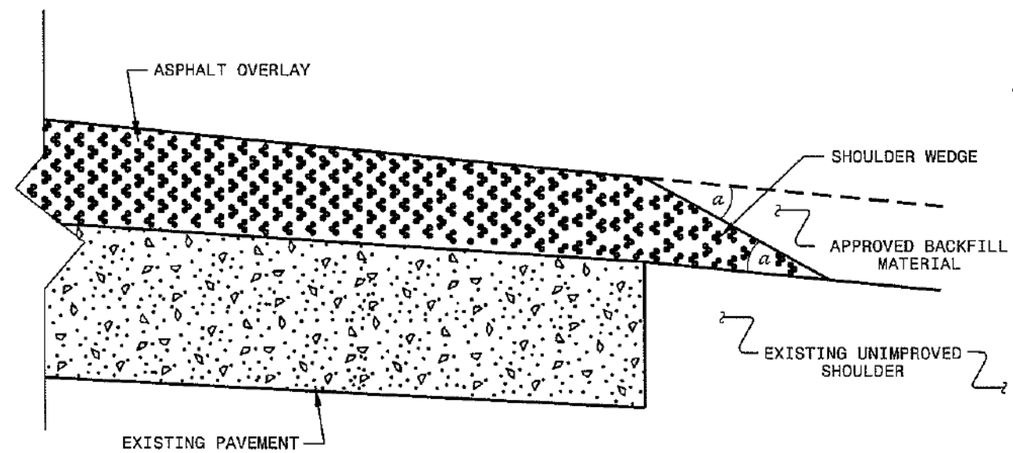

SHOULDER WEDGE DETAIL

(Resurfacing Projects w/ NO Widening)

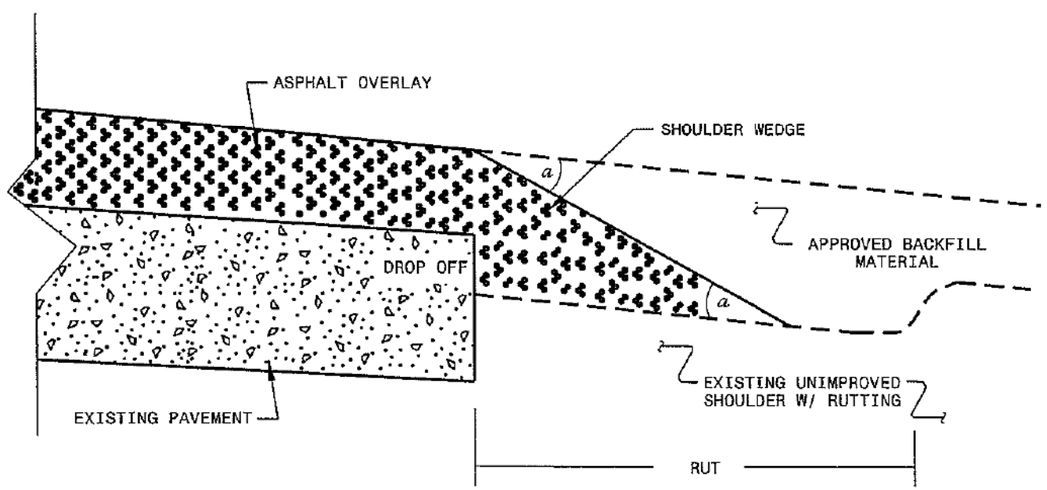

SHOULDER WEDGE DETAIL

(Resurfacing Adjacent to Rutted Shoulder)

- SHOULDER WEDGE ANGLE = 30°

NOT TO SCALE

09/08/99
06-JUN-2014 07:34
O:\RDY\DONE\ONSLOW\W-5203D_45333.I.4_OS LEFTS JVILLE DIST\ROADWAY\Proj\Plansheets\W-5203D_Rdy_tsh.dgn
mkimmel AT D3CAD274450

MANHOLE AND VALVE BOX ADJUSTMENTS

GENERAL NOTES:

1. USE RAPID SET GROUT, MORTAR, OR CONCRETE WITH A MINIMUM COMPRESSIVE STRENGHT OF 4000 PSI.
2. REMOVE ALL FAULTY EXISTING BRICKWORK AND REPLACE WITH NEW BRICK MASONRY.
3. SHEER CUT EXCAVATION FOR THE ADJUSTMENT ON ALL SIDES.
4. FILL AREA BELOW 8" DEPTH WITH 78M OR NO. 57 CLEAN STONE.
5. MIX MORTAR TO NCDOT SPECIFICATIONS.
6. MORTAR JOINTS ½" +/- ⅛"

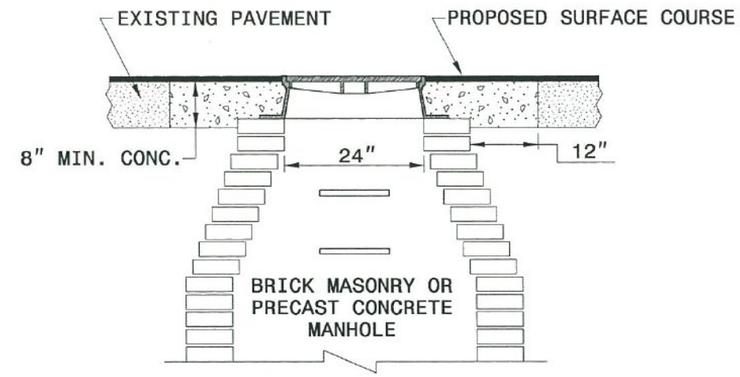

MANHOLE CONCRETE ENCASEMENT

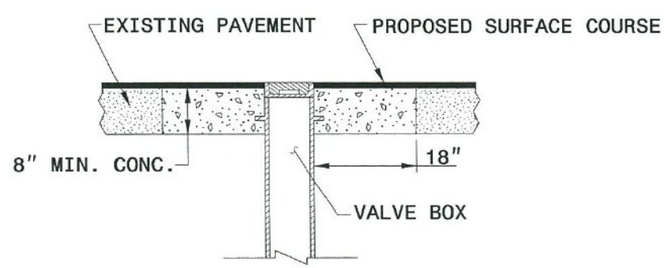

VALVE BOX CONCRETE ENCASEMENT

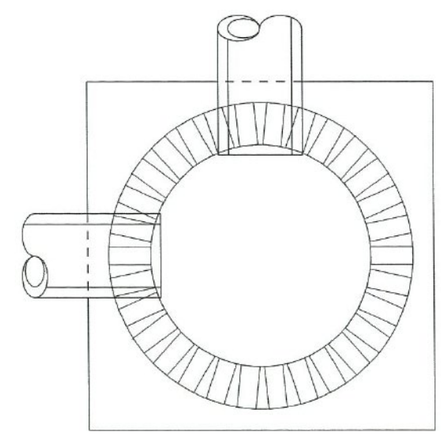

ELEVATION VIEW

PLACE BRICK ACCORDING TO ELEVATION VIEW

NOT TO SCALE

27-JUN-2014 08:45
O:\RDY\DONE\DNSLOW\W-5203D_45333.1.4_OS LEFTS JVILLE DIST\ROADWAY\Proj\Plansheets\W-5203D_Rdy_tsh.dgn
mkimmel
8/17/99

PROJECT REFERENCE NO.	SHEET
W-5203D	2-E

GEOTECHNICAL ENGINEER

NORTH CAROLINA PROFESSIONAL SEAL 030943 ENGINEER

5/15/14

SIGNATURE DATE

ENGINEER

SIGNATURE DATE

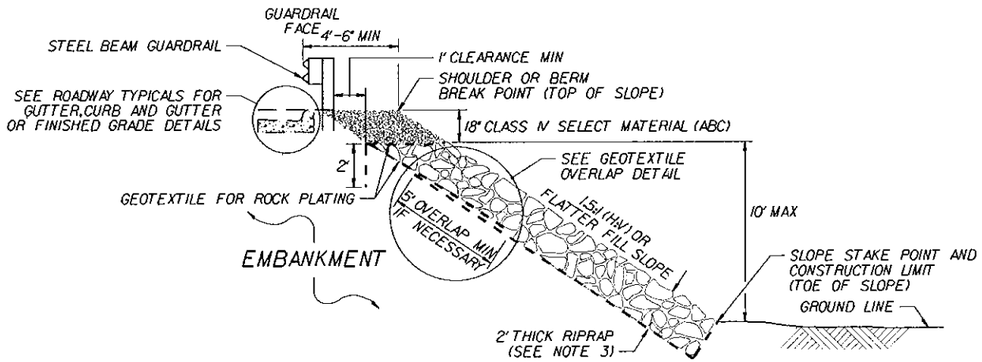

ROCK PLATING DETAIL NO. 1 – TYPICAL SECTION

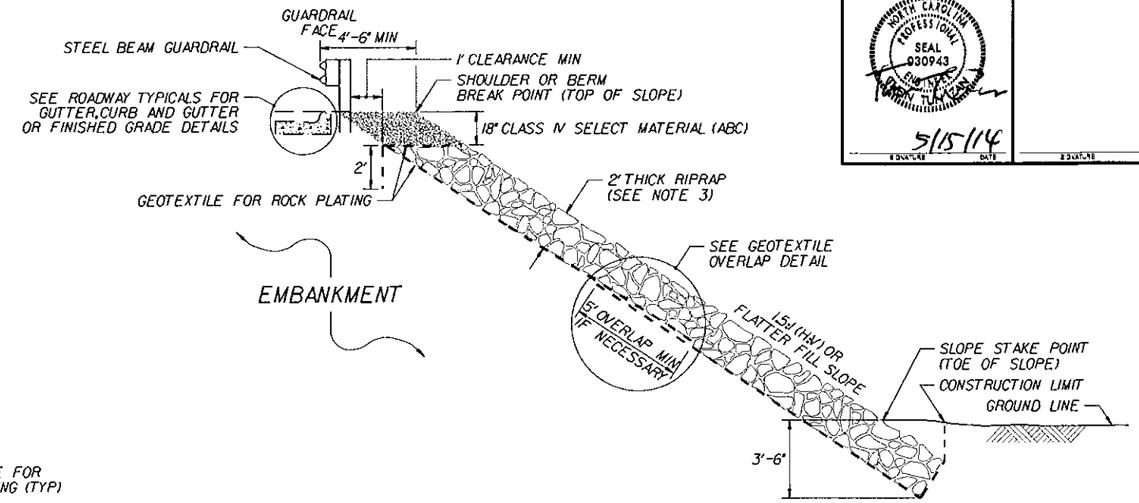

ROCK PLATING DETAIL NO. 2 – TYPICAL SECTION

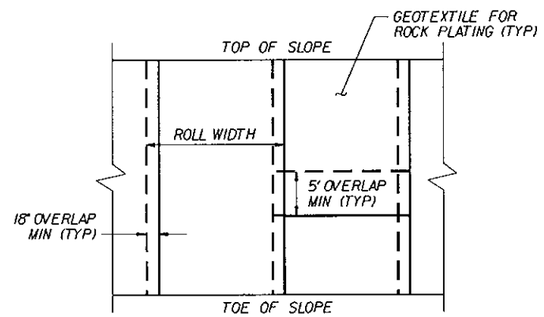

GEOTEXTILE OVERLAP DETAIL

(PLAN VIEW)

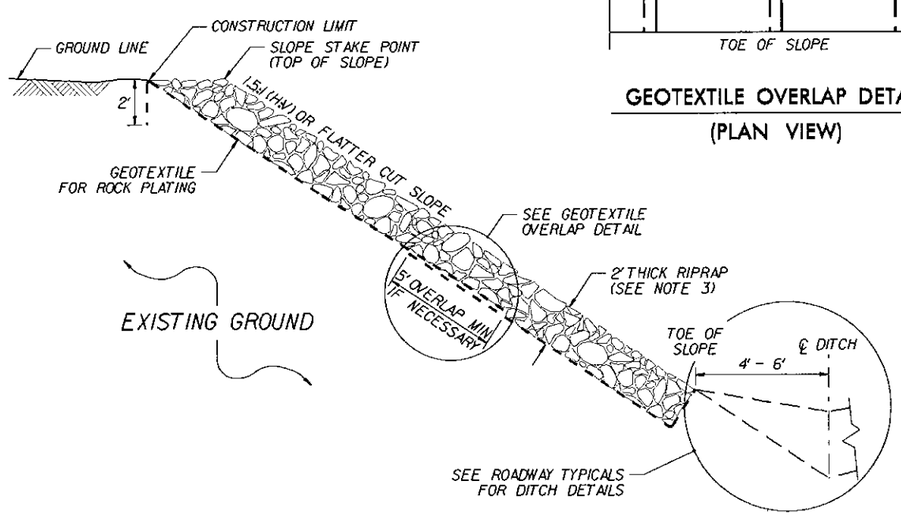

ROCK PLATING DETAIL NO. 3 – TYPICAL SECTION

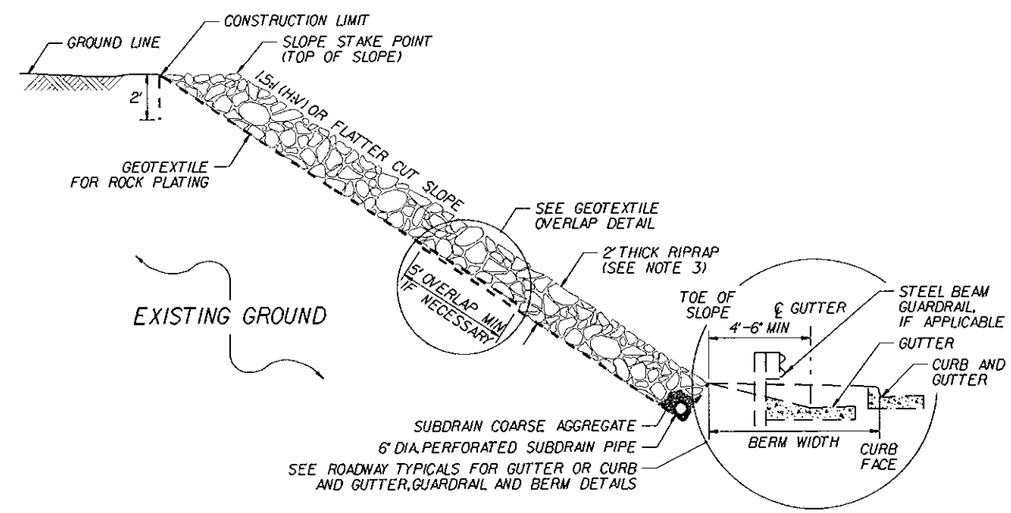

ROCK PLATING DETAIL NO. 4 – TYPICAL SECTION

NOTES:

1. SEE ROADWAY PLANS AND SUMMARY SHEETS FOR ROCK PLATING LOCATIONS.
2. FOR STANDARD ROCK PLATING, SEE SECTION 275 OF THE STANDARD SPECIFICATIONS.
3. USE CLASS 1,2 OR B RIPRAP UNLESS REQUIRED OTHERWISE IN THE ROADWAY SUMMARY SHEETS.

GEOTECHNICAL ENGINEERING UNIT

STATE OF NORTH CAROLINA DEPARTMENT OF TRANSPORTATION RALEIGH

STANDARD DRAWING NO. 1802.01

STANDARD ROCK PLATING

DATE: 2-19-13

PROJECT REFERENCE NO.	SHEET NO.
W-5203D	2-F

PAVEMENT MARKER DETAIL FOR CONCRETE ISLANDS

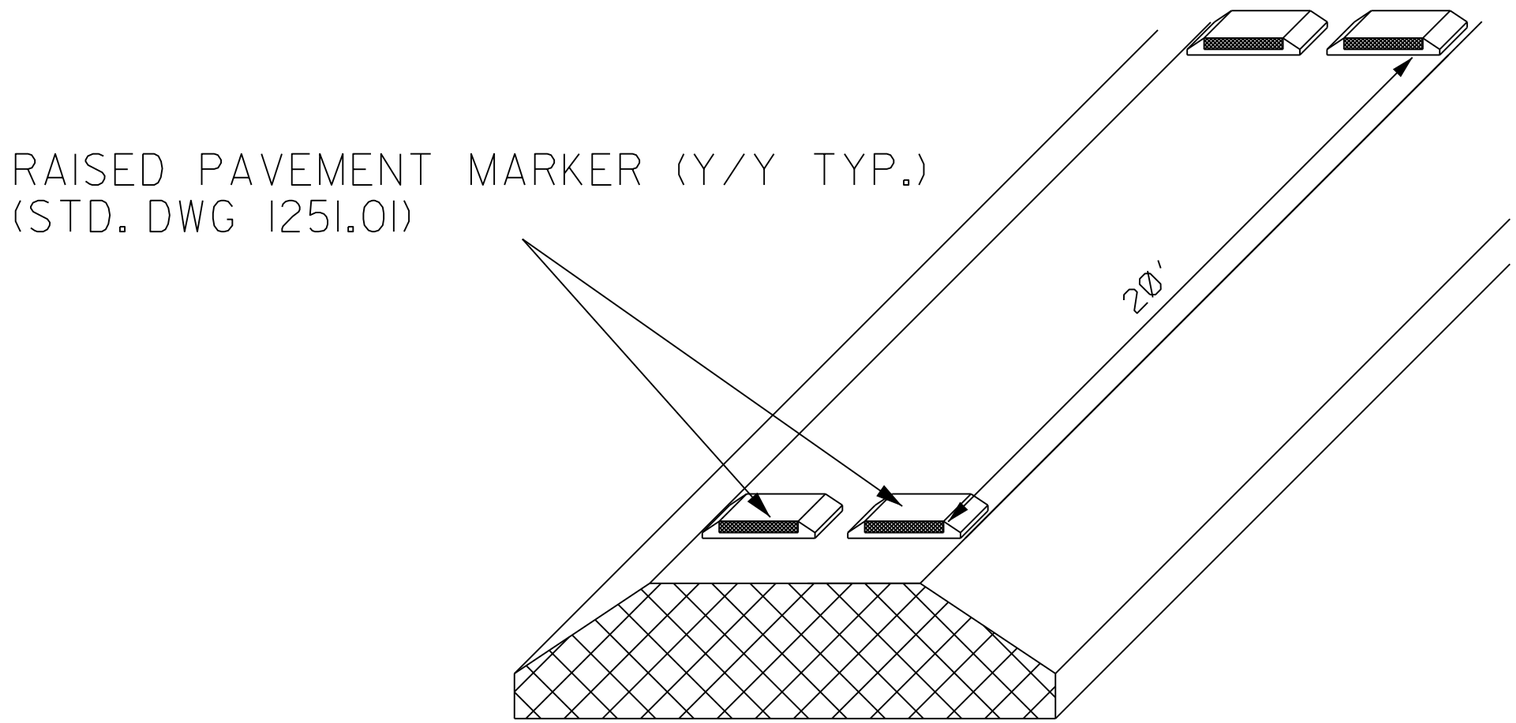

MONOLITHIC CONCRETE ISLAND

(SEE STANDARD DRAWINGS 852.01, 852.02, & 852.06 FOR DETAILS.)

NOT TO SCALE

REVISIONS

8/17/99

16-JUN-2014 15:28
G:\RDY\DONE\ONSLOW\W-5203D_45333_1_4_OS LEFTS JVILLE DIST\ROADWAY\Proj\Plansheets\W-5203D_Rdy_tsh.dgn
mkrumel

DIVISION OF HIGHWAYS
STATE OF NORTH CAROLINA

SOIL STABILIZATION TIMEFRAMES

SITE DESCRIPTION	STABILIZATION TIME	TIMEFRAME EXCEPTIONS
PERIMETER DIKES, SWALES, DITCHES AND SLOPES	7 DAYS	NONE
HIGH QUALITY WATER (HQW) ZONES	7 DAYS	NONE
SLOPES STEEPER THAN 3:1	7 DAYS	IF SLOPES ARE 10' OR LESS IN LENGTH AND ARE NOT STEEPER THAN 2:1, 14 DAYS ARE ALLOWED.
SLOPES 3:1 OR FLATTER	14 DAYS	7 DAYS FOR SLOPES GREATER THAN 50' IN LENGTH.
ALL OTHER AREAS WITH SLOPES FLATTER THAN 4:1	14 DAYS	NONE, EXCEPT FOR PERIMETERS AND HQW ZONES.

PROJECT REFERENCE NO.	SHEET NO.
W-5203D	2-H

WATTLE DETAIL

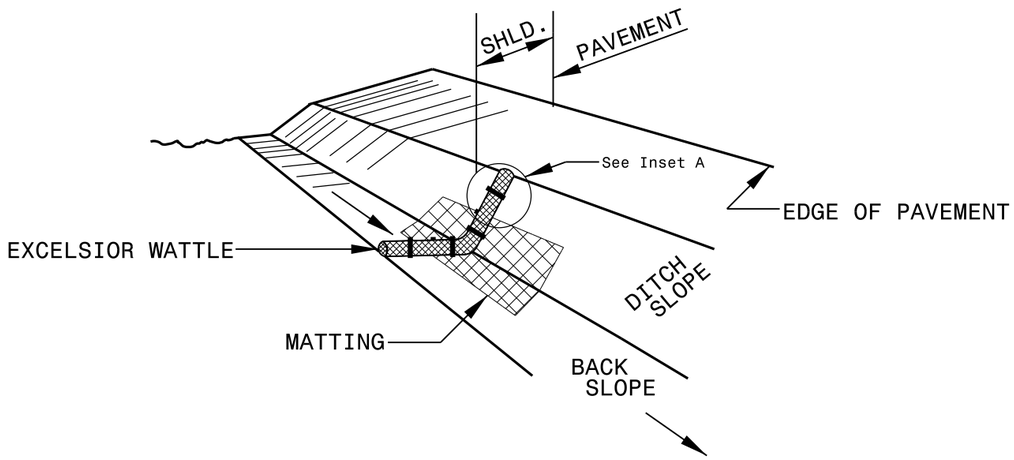

ISOMETRIC VIEW

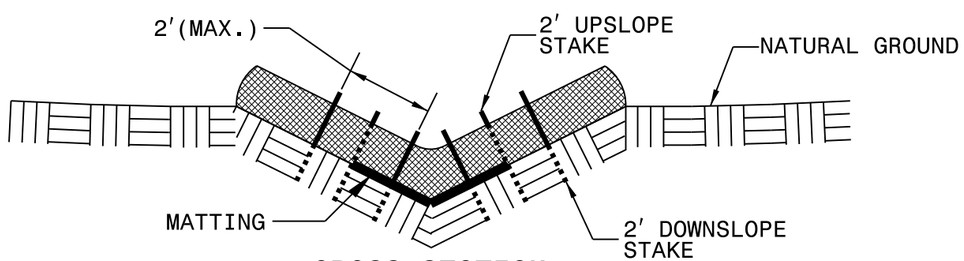

CROSS SECTION VEE DITCH

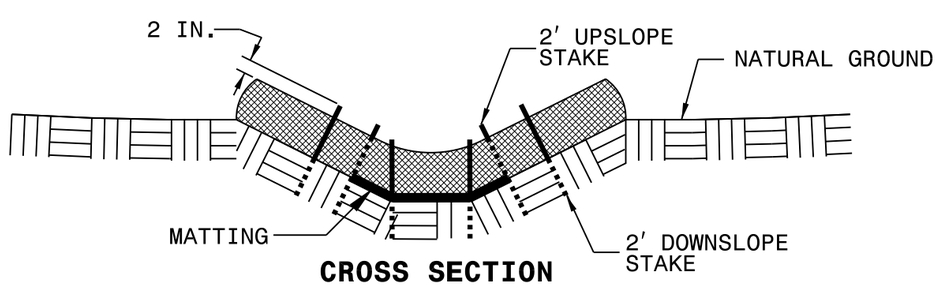

CROSS SECTION TRAPEZOIDAL DITCH

NOTES:

USE MINIMUM 12 IN. DIAMETER EXCELSIOR WATTLE.

USE 2 FT. WOODEN STAKES WITH A 2 IN. BY 2 IN. NOMINAL CROSS SECTION.

ONLY INSTALL WATTLE(S) TO A HEIGHT IN DITCH SO FLOW WILL NOT WASH AROUND WATTLE AND SCOUR DITCH SLOPES AND AS DIRECTED.

INSTALL A MINIMUM OF 2 UPSLOPE STAKES AND 4 DOWNSLOPE STAKES AT AN ANGLE TO WEDGE WATTLE TO BOTTOM OF DITCH.

PROVIDE STAPLES MADE OF 0.125 IN. DIAMETER STEEL WIRE FORMED INTO A U SHAPE NOT LESS THAN 12″ IN LENGTH.

INSTALL STAPLES APPROXIMATELY EVERY 1 LINEAR FOOT ON BOTH SIDES OF WATTLE AND AT EACH END TO SECURE IT TO THE SOIL.

INSTALL MATTING IN ACCORDANCE WITH SECTION 1631 OF THE STANDARD SPECIFICATIONS.

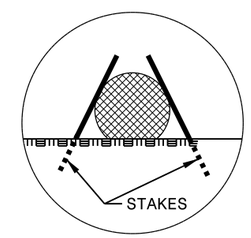

INSET A

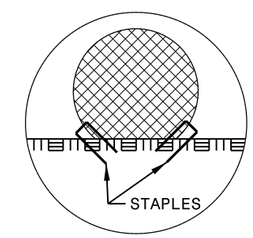

INSET B

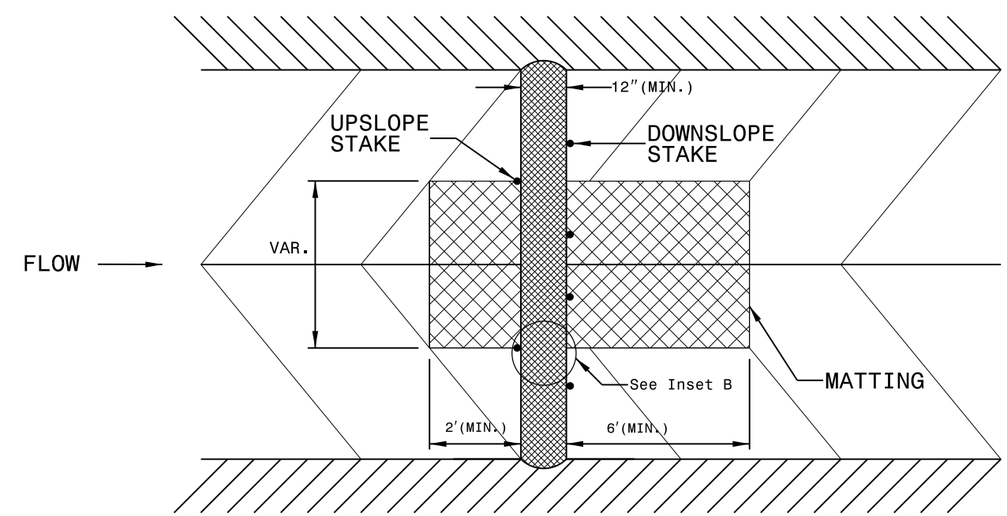

TOP VIEW

NOT TO SCALE

PROJECT REFERENCE NO.	SHEET NO.
W-5203D	2-I

WATTLE WITH POLYACRYLAMIDE (PAM) DETAIL

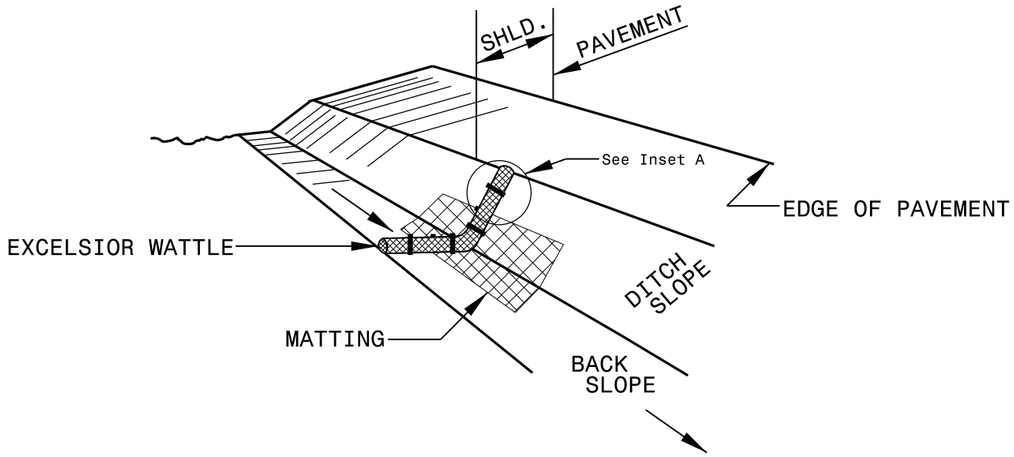

ISOMETRIC VIEW

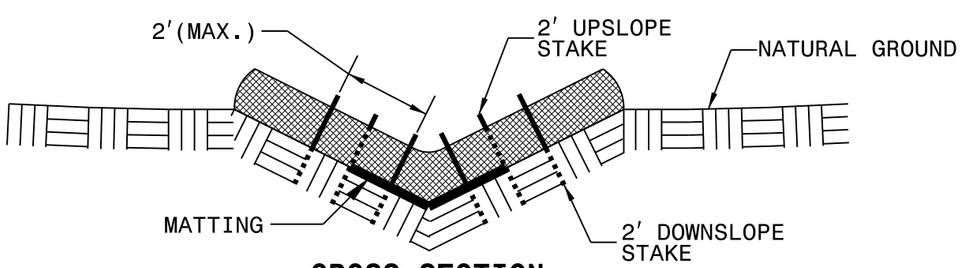

CROSS SECTION VEE DITCH

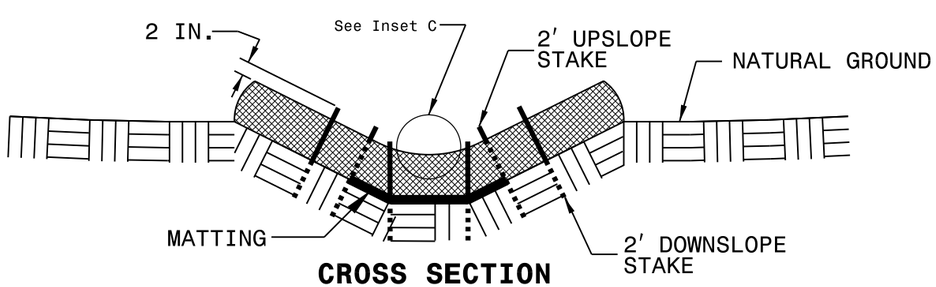

CROSS SECTION TRAPEZOIDAL DITCH

NOTES:

USE MINIMUM 12 IN. DIAMETER EXCELSIOR WATTLE.

USE 2 FT. WOODEN STAKES WITH A 2 IN. BY 2 IN. NOMINAL CROSS SECTION.

ONLY INSTALL WATTLE(S) TO A HEIGHT IN DITCH SO FLOW WILL NOT WASH AROUND WATTLE AND SCOUR DITCH SLOPES AND AS DIRECTED.

INSTALL A MINIMUM OF 2 UPSLOPE STAKES AND 4 DOWNSLOPE STAKES AT AN ANGLE TO WEDGE WATTLE TO BOTTOM OF DITCH.

PROVIDE STAPLES MADE OF 0.125 IN. DIAMETER STEEL WIRE FORMED INTO A U SHAPE NOT LESS THAN 12″ IN LENGTH.

INSTALL STAPLES APPROXIMATELY EVERY 1 LINEAR FOOT ON BOTH SIDES OF WATTLE AND AT EACH END TO SECURE IT TO THE SOIL.

INSTALL MATTING IN ACCORDANCE WITH SECTION 1631 OF THE STANDARD SPECIFICATIONS.

PRIOR TO POLYACRYLAMIDE (PAM) APPLICATION, OBTAIN A SOIL SAMPLE FROM PROJECT LOCATION, AND FROM OFFSITE MATERIAL, AND ANALYZE FOR APPROPRIATE PAM FLOCCULANT TO BE APPLIED TO EACH WATTLE.

INITIALLY APPLY 2 OUNCES OF ANIONIC OR NEUTRALLY CHARGED PAM OVER WATTLE WHERE WATER WILL FLOW AND 1 OUNCE OF PAM ON MATTING ON EACH SIDE OF WATTLE. REAPPLY PAM AFTER EVERY RAINFALL EVENT THAT IS EQUAL TO OR EXCEEDS 0.50 IN.

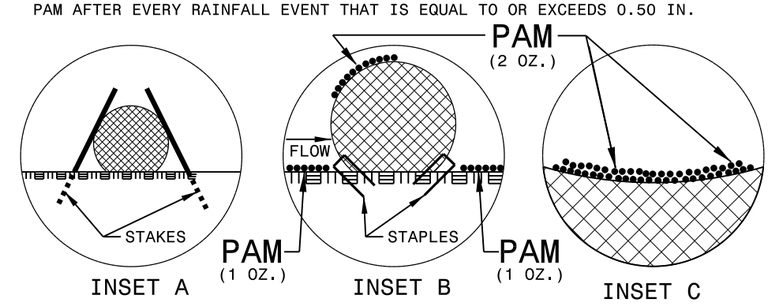

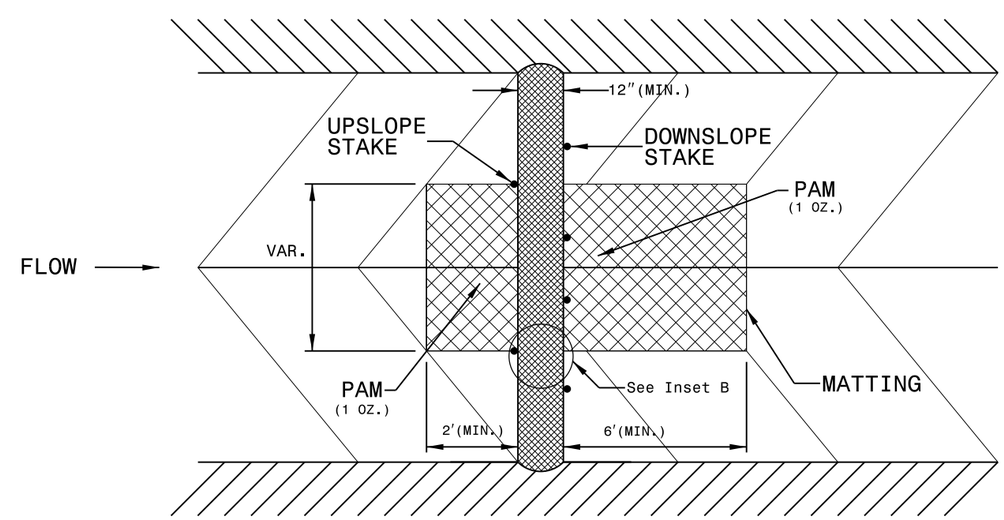

TOP VIEW

SILT FENCE WATTLE BREAK DETAIL

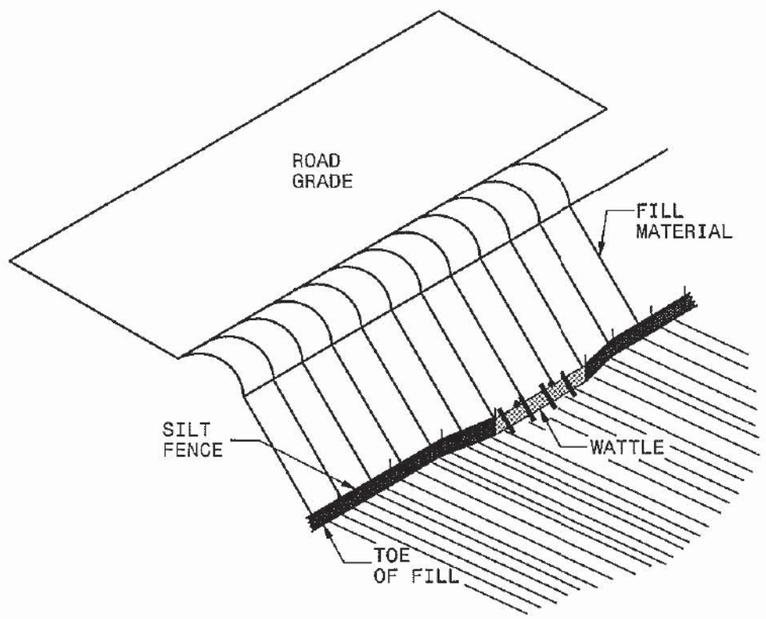

ISOMETRIC VIEW

NOTES:

USE MINIMUM 12 IN. DIAMETER EXCELSIOR WATTLE AND LENGTH OF 10 FT.

EXCAVATE A 1 TO 2 INCH TRENCH FOR WATTLE TO BE PLACED.

DO NOT PLACE WATTLE ON TOE OF SLOPE.

USE 2 FT. WOODEN STAKES WITH A 2 IN. BY 2 IN. NOMINAL CROSS SECTION.

INSTALL A MINIMUM OF 2 UPSLOPE STAKES AND 4 DOWNSLOPE STAKES AT AN ANGLE TO WEDGE WATTLE TO GROUND.

PROVIDE STAPLES MADE OF 0.125 IN. DIAMETER STEEL WIRE FORMED INTO A U SHAPE NOT LESS THAN 12" IN LENGTH.

INSTALL STAPLES APPROXIMATELY EVERY 1 LINEAR FOOT ON BOTH SIDES OF WATTLE AND AT EACH END TO SECURE IT TO THE SOIL.

WATTLE INSTALLATION CAN BE ON OUTSIDE OF THE SILT FENCE AS DIRECTED.

INSTALL TEMPORARY SILT FENCE IN ACCORDANCE WITH SECTION 1605 OF THE STANDARD SPECIFICATIONS.

INSET A

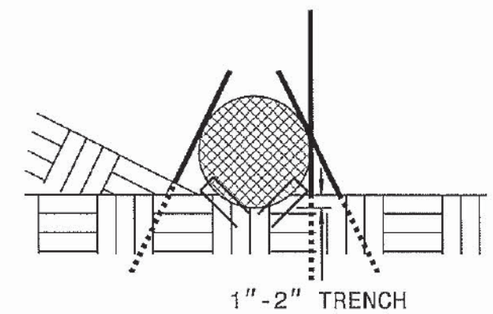

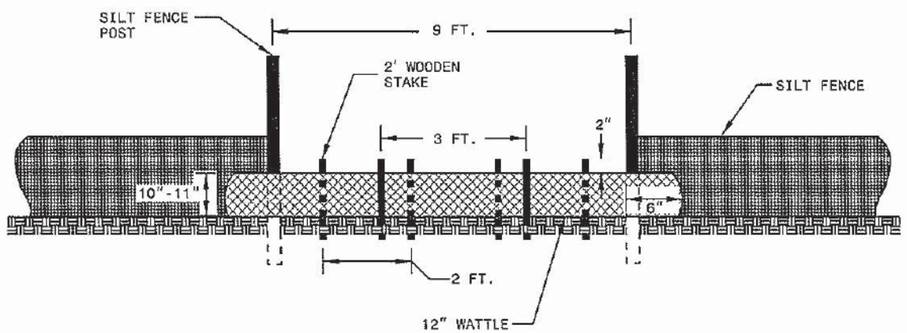

VIEW FROM SLOPE

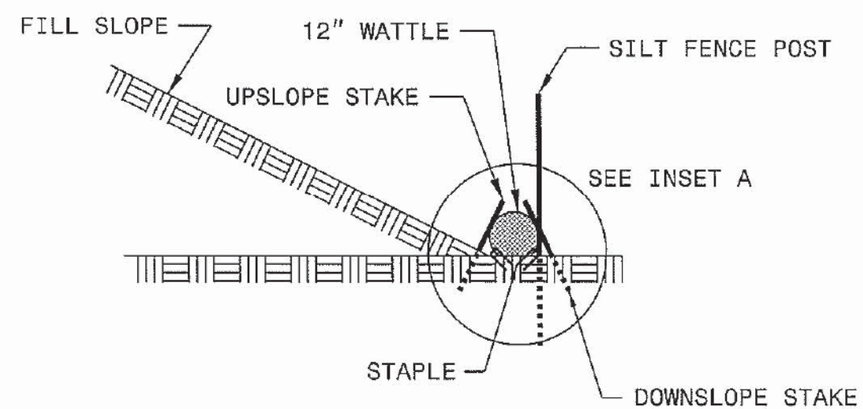

SIDE VIEW

NOT TO SCALE

8/17/99
27-JUN-2014 08:58
D:\HOTLOONEY\SLOPE\W-5203D_45333_4_OS LEFTS JVILLE DIST\ROADWAY\Proj\Plansheets\W-5203D_Rdy_tsh.dgn
mkimmel AT DSCAD27X4F50

PROJECT REFERENCE NO.	SHEET NO.
W-5203D	2-K

EARTHEN DAM WITH SKIMMER DETAIL (EAST)

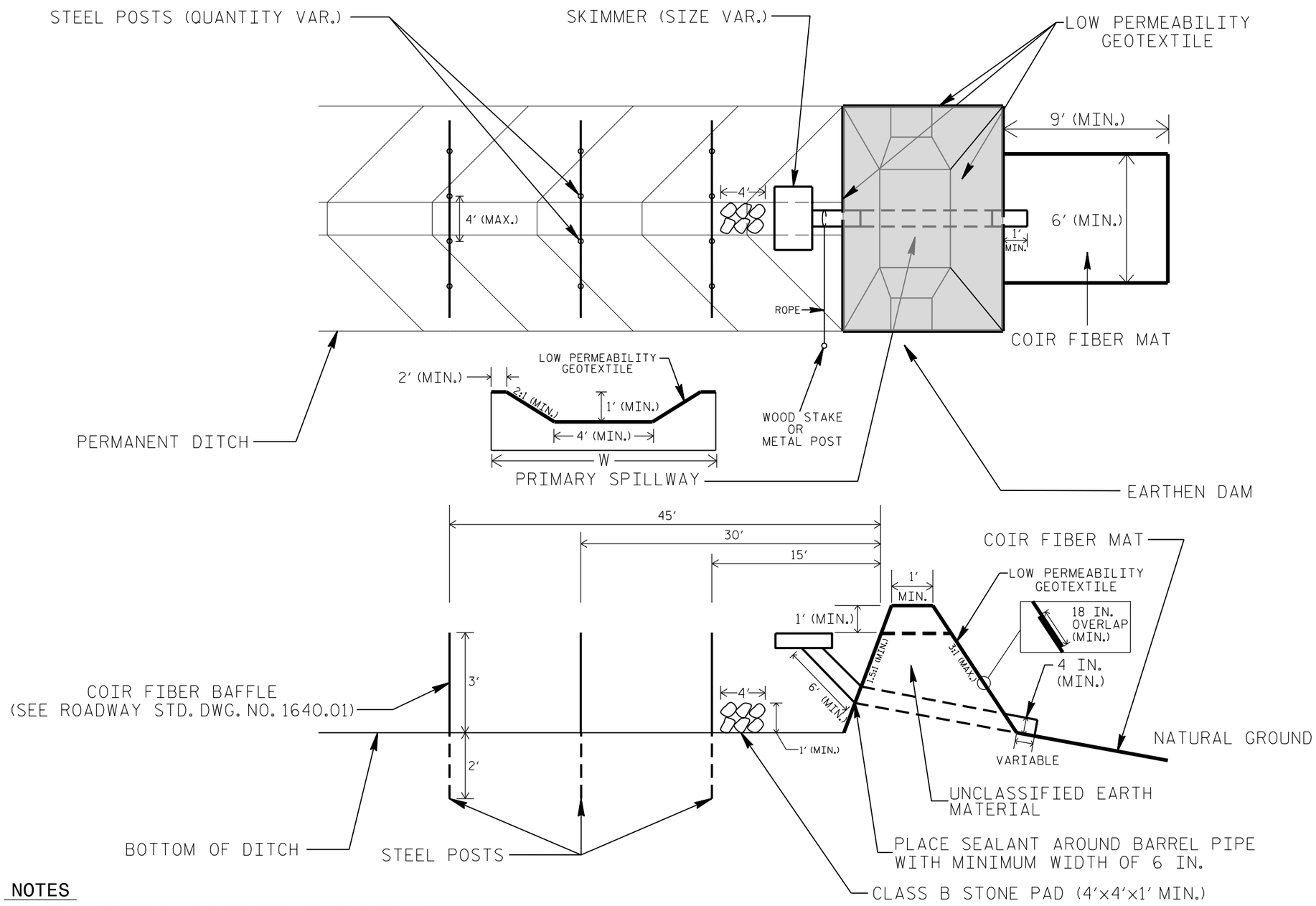

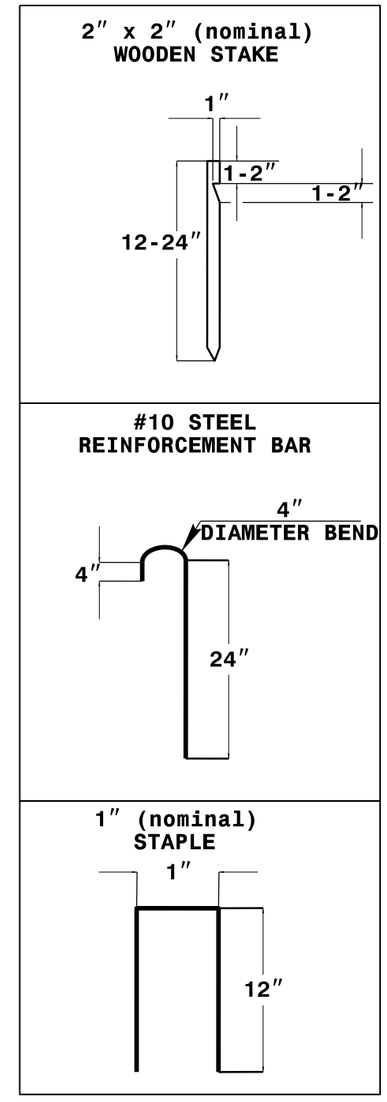

COIR FIBER MAT ANCHOR OPTIONS

NOTES

1. LIMIT EARTHEN DAM HEIGHT TO 5 FT.
2. DETERMINE PRIMARY SPILLWAY LENGTH (FT.) USING Q/0.4, WHERE Q IS FLOW RATE (CFS) INTO BASIN.
3. LOW PERMEABILITY GEOTEXTILE FOR PRIMARY SPILLWAY SHALL BE ONE CONTINUOUS PIECE OF MATERIAL OR OVERLAPPED 18 IN. (MIN.).

NOT TO SCALE

PROJECT REFERENCE NO.	SHEET NO.
W-5203D	2-L

High Speed Detection
[≥40 mph (64 km/hr)]

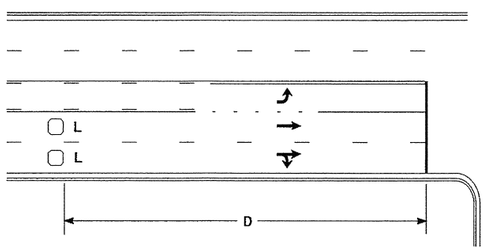

OR

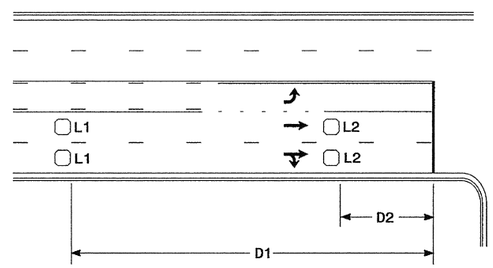

Speed Limit mph (km/hr)		D ft	(m)
40	(64)	250	(75)
45	(72)	300	(90)
50	(80)	355	(110)
55	(88)	420	(130)

L = 6ft X 6ft (1.8m X 1.8m)
Wired in series for TS1 Controllers
Wired separately for TS2, 170, and 2070L Controllers

Volume Density Operation

Speed Limit mph (km/hr)		D1 ft	(m)	D2 ft	(m)
40	(64)	250	(75)	80	(25)
45	(72)	300	(90)	90	(27)
50	(80)	355	(110)	100	(30)
55	(88)	420	(130)	110	(35)

L1 = 6ft X 6ft (1.8m X 1.8m)
Wired in series

L2 = 6ft X 6ft (1.8m X 1.8m)
Wired in series

"Stretch" Operation

Low Speed Detection
[≤35 mph (56 km/hr)]

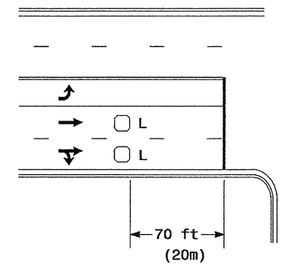

OR

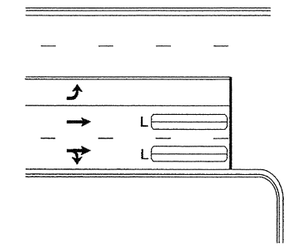

L = 6ft X 6ft (1.8m X 1.8m)
Wired in series

L = 6ft X 40ft (1.8m X 12.0m)
Quadrupole loop, wired separately

Left Turn Lane Detection

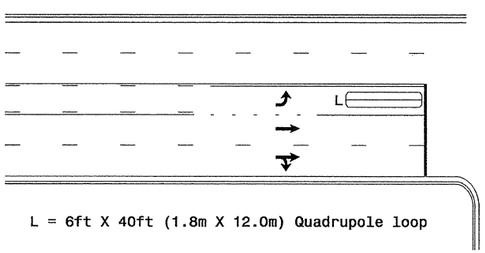

L = 6ft X 40ft (1.8m X 12.0m) Quadrupole loop

Presence Loop Detection

OR

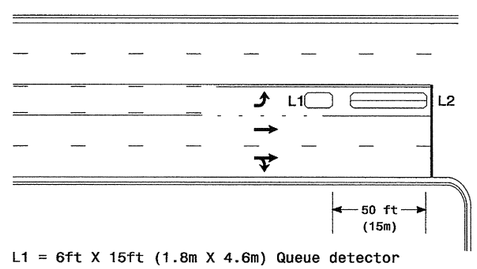

L1 = 6ft X 15ft (1.8m X 4.6m) Queue detector
L2 = 6ft X 40ft (1.8m X 12.0m) Quadrupole loop

Queue Loop Detection

Right Turn Lane Detection

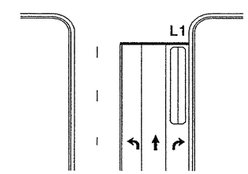

Standard Turn

L1 = 6ft X 40ft (1.8m X 12.0m) Quadrupole loop
L2 = 6ft X 6ft (1.8m X 1.8m) [Minimum] Presence loop
Wired separately
L3 = 6ft X 20ft (1.8m X 6.0m) Quadrupole loop
Wired in series

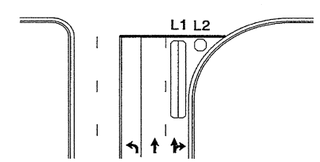

Wide Radius Turn

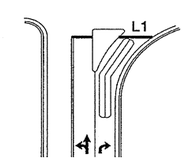

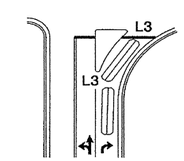

Channelized Turn

Side Street Detection

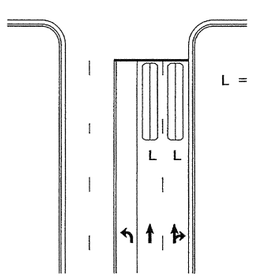

L = 6ft X 40ft (1.8m X 12.0m)
Quadrupole loop
Wired to separate detectors/channels

Presence Loop Placement at Stop Lines

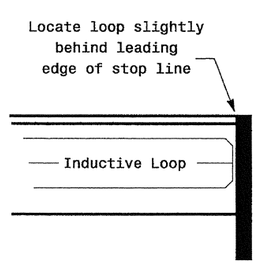

Note:
Loop may be located in advance of stop line when stop line is greater than 15′ (4.5m) from edge of intersecting roadway; or, when loop detects a permissive or protected/permissive left turn.

Recommended Number of Turns

Single 6′ X 6′ (1.8m X 1.8m) loop (wired separately):

Length of Lead-in ft	(m)	Number of Turns
< 250	(75)	3
250-375	(75-115)	4
375-525	(115-160)	5
> 525	(160)	6

Quadrupole loops: Use 2-4-2 turns

6′ X 15′ (1.8m X 4.6m) Loops:
Lead-in < 150′ (45 m), use 2 turns
Lead-in > 150′ (45 m), use 3 turns

Prepared in the Offices of:
Traffic Engineering and Safety Systems Branch
Signals and Geometrics Section
STATE OF NORTH CAROLINA DEPARTMENT OF TRANSPORTATION
122 N. McDowell St., Raleigh, NC 27603

Typical Loop Locations

PLAN DATE: June 2006	REVIEWED BY:	
PREPARED BY: P L Alexander	REVIEWED BY:	
REVISIONS	INIT.	DATE
1) Revise pavement markings	JR	12/19/06

SCALE
N/A

SEAL
NORTH CAROLINA PROFESSIONAL SEAL 23488 ENGINEER PAMELA L. ALEXANDER
SIGNATURE 6/6/06 DATE
SIG. INVENTORY NO.

19-DEC-2006 14:29
s:#ts signals#lib turn in#mlsc#tocostypical2006.dgn
palexander

STATE OF NORTH CAROLINA
DEPT. OF TRANSPORTATION
DIVISION OF HIGHWAYS
RALEIGH, N.C.

ENGLISH STANDARD DRAWING FOR

DEEP-CUT INDUCTIVE DETECTION LOOPS

(FOR INSTALLATION PRIOR TO MILLING)

NOTES

- OVERLAP SAW CUTS AT CORNERS AND INTERSECTION POINTS TO ENSURE UNIFORM SAW SLOT DEPTH.
- MAINTAIN 12″ SPACING BETWEEN LOOP WIRE TAIL SECTIONS.
- WIRE LOOPS CONNECTED TO THE SAME DETECTOR IN SERIES.
- LOCATE LOOPS IN CENTER OF LANES UNLESS OTHERWISE SHOWN ON PLANS.
- USE A SERIES OF ONE INCH PIECES OF BACKER ROD SPACED ONE FOOT APART ALONG THE ENTIRE LENGTH OF THE FEEDER SLOT AND LOOP SAW SLOT.
- CONSULT LOOP SEALANT MANUFACTURER TO DETERMINE CURING TIME REQUIRED PRIOR TO MILLING.

SAW SLOT DEPTH CHART

ASSUMING 2″ MILLING DEPTH

DEPTH (IN)	NO. OF WIRE LAYERS				
	2	3	4	5	6
SAW SLOT DEPTH	4.0	4.5	5.0	5.0	5.0
MINIMUM TOTAL ASPHALT DEPTH REQUIRED	5.0	5.5	6.0	6.0	6.0

LOOP WIRE TWISTING METHOD

INCORRECT WAY TO TWIST WIRE

CORRECT WAY TO TWIST WIRE

CONVENTIONAL 4-SIDED LOOP

SAW CUT OPTIONS

OPTION 1

INSTALL 1″ SECTIONS OF BACKER ROD ON 1 FOOT CENTERS

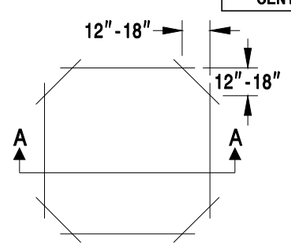

OPTION 2 (POOR PAVEMENT)

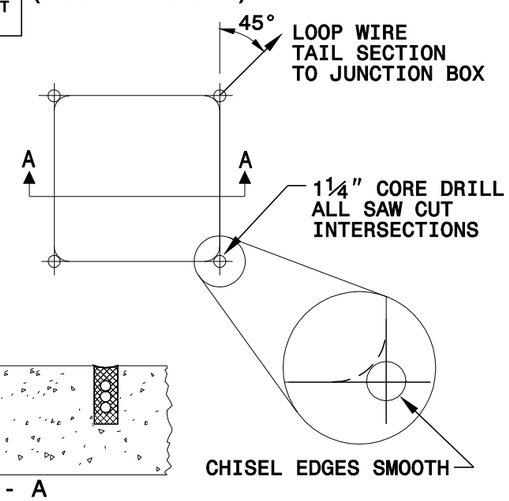

SECTION A - A

LOOP WINDING METHOD

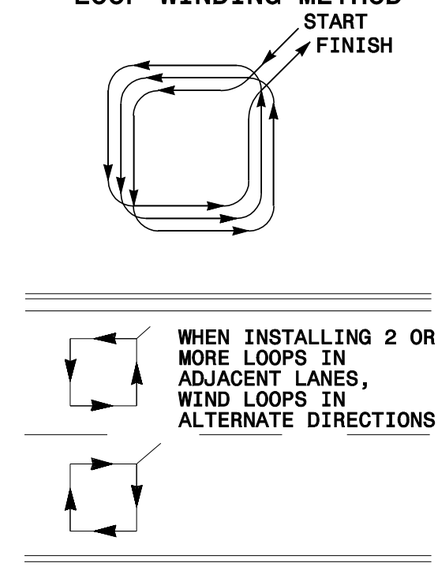

QUADRUPOLE LOOP

SAW CUT OPTIONS

OPTION 1

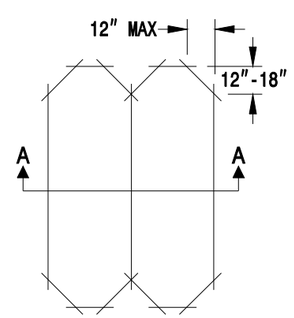

OPTION 2 (POOR PAVEMENT)

INSTALL 1″ SECTIONS OF BACKER ROD ON 1 FOOT CENTERS

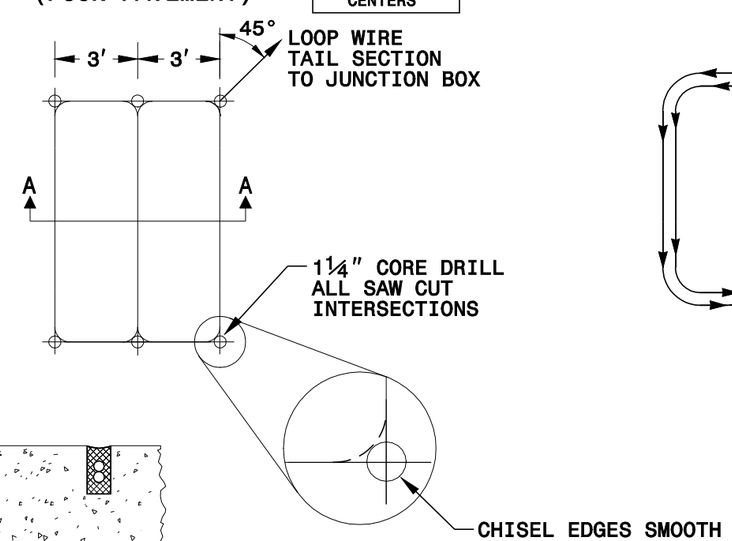

SECTION A - A

LOOP WINDING METHOD

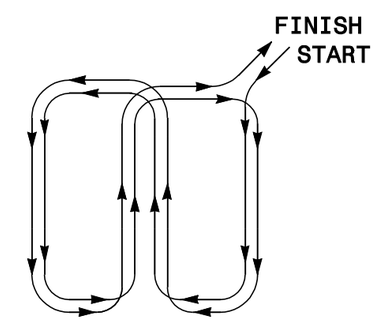

REVISIONS
REMOVED TWISTING NOTES FROM TAIL SECT. TO JUNCTION BOX. 2/26/08 MWH

STATE OF NORTH CAROLINA
DEPT. OF TRANSPORTATION
DIVISION OF HIGHWAYS
RALEIGH, N.C.

ENGLISH STANDARD DRAWING FOR

DEEP-CUT INDUCTIVE DETECTION LOOPS

(FOR INSTALLATION PRIOR TO MILLING)

SHEET 1 OF 1

PROJ. REFERENCE NO.	SHEET NO.
W-5203D	2-N

URBAN / SUBURBAN WORKZONES

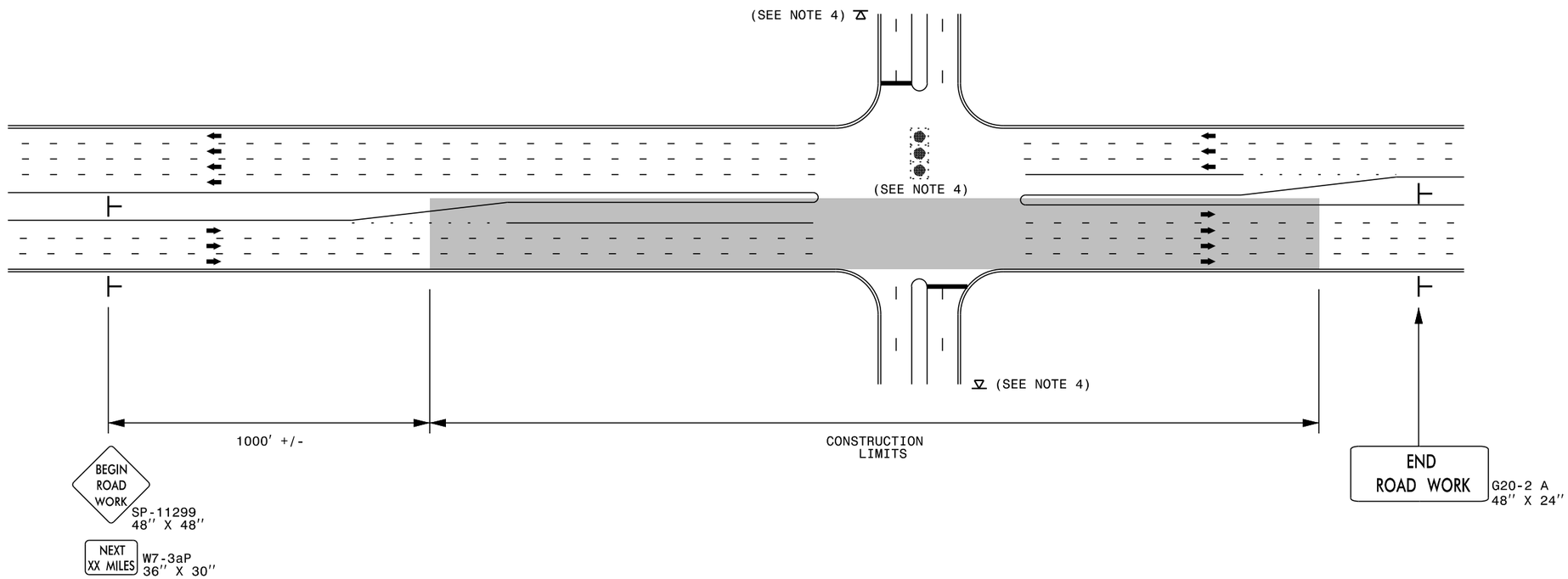

NOTES:

1) 48" x 48" SIZED SIGNS (SP- 11299) MAY BE REDUCED TO 36" X 36" ON ROADWAYS WITH SPEED LIMITS OF 40 MPH OR LESS.
2) MOUNT SIGNS THAT ARE LARGER THAN 10 SQUARE FEET IN AREA ON TWO OR MORE WOOD OR U-CHANNEL SUPPORTS. PERFORATED SQUARE TUBING SUPPORT SYSTEMS MAY SUPPORT LARGER AREAS ON A SINGLE SUPPORT. FOLLOW MANUFACTURER'S RECOMMENDATIONS. THESE SYSTEMS SHALL BE NCHRP 350 COMPLIANT AND NCDOT APPROVED.
3) ADVANCE WARNING SIGNS NOT REQUIRED ON NON-SIGNALIZED SIDE STREETS.
4) MAY USE LAW ENFORCEMENT TO CONTROL TRAFFIC AT SIGNALIZED INTERSECTIONS AS DIRECTED BY THE ENGINEER. PROVIDE PORTABLE "ROAD WORK AHEAD" (W20-1) SIGNS 500' IN ADVANCE ALONG BOTH APPROACHES FROM THE SIDE STREETS WHEN PAVING PROCEEDS THROUGH THE INTERSECTION.
5) LATERAL CLEARANCE AT ALL SIGN LOCATIONS SHALL BE 2' AS MEASURED FROM THE EDGE OF PAVEMENT OR THE FACE OF THE CURB. WHEN UNABLE TO OBTAIN THE LATERAL CLEARANCE WITHIN THE MEDIAN AREA USE SHOULDER MOUNTS ONLY.
6) SIGN MOUNT LOCATIONS SHALL NOT BLOCK SIDEWALKS OR DRIVEWAYS.
7) IF STATIONARY GENERAL WARNING SIGNS ARE USED, THEY WILL BE PAID FOR PER SECTION 104 OF THE NCDOT STANDARD SPECIFICATIONS AS EXTRA WORK.
8) IF MILLED AREAS ARE NOT PAVED BACK BY THE END OF THE WORK DAY, PORTABLE SIGNS SHALL BE USED TO WARN DRIVERS OF THE PRESENT CONDITIONS. THESE ARE TO INCLUDE, BUT NOT LIMITED TO "ROUGH ROAD" W8-8, "UNEVEN LANES" W8-11, "GROOVED PAVEMENT" W8-15 w/MOTORCYCLE PLAQUE MOUNTED BELOW. THESE ARE TO BE DOUBLE INDICATED ON MULTI-LANE ROADWAYS WITH SPEED LIMITS 45 MPH AND GREATER WHERE LATERAL CLEARANCE CAN BE OBTAINED WITHIN THE MEDIAN AREAS.THESE PORTABLE SIGNS ARE INCIDENTAL TO THE OTHER ITEMS OF WORK INCLUDED IN THE TEMPORARY TRAFFIC CONTROL (LUMP SUM) PAY ITEM.

LEGEND

⊢ STATIONARY SIGN

➡ DIRECTION OF TRAFFIC FLOW

DIVISION OF HIGHWAYS · STATE OF NORTH CAROLINA · DEPARTMENT OF TRANSPORTATION · WORK ZONE TRAFFIC CONTROL

RESURFACING ADVANCE WARNING SIGNS FOR URBAN / SUBURBAN FACILITIES

2/24/2014
S:\TMU\WZTC\Resurfacing\2013Resurfacing\2013Documents\New_Procedures_05_09_2013\Resurfacing_AdvWarn_Ur-Su.dgn

PROJ. REFERENCE NO.	SHEET NO.
W-5203D	2-O

SIGNING FOR RURAL AND SUBURBAN MULTI-LANE ROADWAYS WITH SHOULDER SECTIONS

(DIVIDED OR UNDIVIDED)

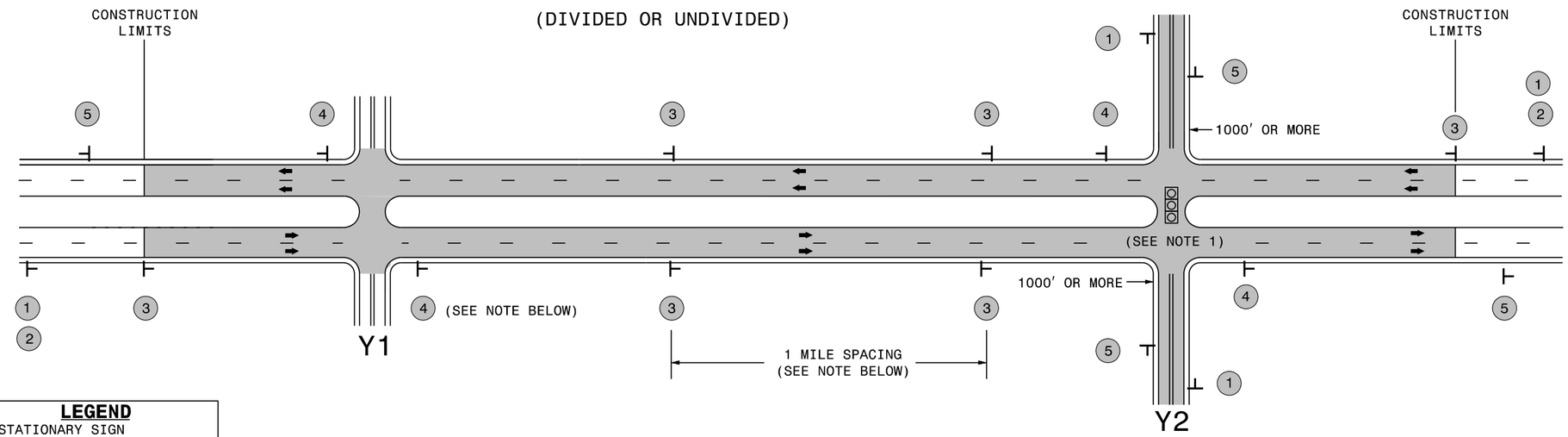

LEGEND

⊢ STATIONARY SIGN

⬅ DIRECTION OF TRAFFIC FLOW

MAINLINE (-L-) SIGNING

SIGNING NOTES AND PLACEMENT PER DIRECTION

1 — ROAD WORK AHEAD, W20-1, 48″ X 48″

2 — NEXT XX MILES, W7-3aP, 24″ X 18″

PLACE 1000′ PRIOR TO BEGINNING OF CONSTRUCTION LIMITS.
ONLY USED ON -Y- LINES IF RESURFACING LIMITS EXTEND 1000′ ALONG -Y- LINE.

#2 SIGN ONLY USED WHEN RESURFACING LIMITS ARE 2 OR MORE MILES IN LENGTH. ROUND UP TO NEXT WHOLE NUMBER.(NO FRACTIONAL OR DECIMAL NUMBERS)

3 — LOW/SOFT SHOULDER, SP 13107, 48″ X 48″

PLACE INITIALLY AT THE CONSTRUCTION LIMITS AND SPACED 1 MILE APART THEREAFTER. IF NO -Y- LINES EXIST, PLACE 2ND SET ½ MILE FROM THE CONSTRUCTION LIMITS AND THEN SPACE 1 MILE THEREAFTER.

4 — ROAD UNDER CONST, SP 13106, 48″ X 48″

THESE ARE FOR -Y- LINES THAT ARE "THROUGH" ROADWAYS. DEAD END AND SUBDIVISION ROADS ARE NOT "THROUGH" ROADWAYS. INSTALL 500′ +/- FROM EACH -Y- LINE APPROACH AS SHOWN ABOVE. FOR MULTIPLE -Y- LINES THAT ARE SEPARATED BY 0.25 MILES OR LESS, TREAT AS A SINGLE UNIT AND INSTALL WITHIN 500′ OF EACH APPROACH. A MAXIMUM OF 2 SIGN SETS PER MILE. DO NOT INSTALL WHEN -Y- LINES ARE WITHIN 0.5 MILES FROM "END ROAD WORK" SIGN.

5 — END ROAD WORK, G20-2 A, 48″ X 24″

PLACE 500′ FOLLOWING THE END OF CONSTRUCTION LIMITS.

-Y- LINE SIGNING

NO REQUIRED STATIONARY SIGNING FOR THE FOLLOWING -Y- LINE CONDITIONS:

1) LESS THAN 1000′ OF RESURFACING ALONG -Y- LINE
2) SUBDIVISION ROADS
3) DEAD END ROADS

WHEN PAVING/CONSTRUCTION ACTIVITIES PROCEED ACROSS AN UNSIGNED -Y- LINE, ADVANCE WARNING PORTABLE SIGNS SHALL BE USED ALONG THE -Y- LINE AS SHOWN BELOW. REMOVE UPON COMPLETION OF WORK.

ROAD WORK AHEAD, W20-1, 48″ X 48″ — PLACED 500′ IN ADVANCE OF FLAGGER.

W20-7 A, 48″ X 48″ — PLACED 250′ IN ADVANCE OF FLAGGER.

NOTES:

1) MAY USE LAW ENFORCEMENT TO CONTROL TRAFFIC AT SIGNALIZED INTERSECTIONS AS DIRECTED BY THE ENGINEER. PROVIDE PORTABLE "ROAD WORK AHEAD" (W20-1) SIGNS 500′ IN ADVANCE ALONG BOTH APPROACHES FROM THE SIDE STREETS WHEN PAVING PROCEEDS THROUGH THE INTERSECTION.

DIVISION OF HIGHWAYS · STATE OF NORTH CAROLINA · DEPARTMENT OF TRANSPORTATION · WORK ZONE TRAFFIC CONTROL

RESURFACING
ADVANCE WARNING SIGNS
FOR RURAL AND SUBURBAN
MULTI-LANE ROADWAYS
W/ SHOULDER SECTIONS
(DIVIDED OR UNDIVIDED)

2/24/2014
S:\TMU\WZTC\Resurfacing\2013Resurfacing\2013Documents\New_Procedures_05_09_2013\Resurfacing_AdvWarn_UrSu_Shldr.dgn
User:rmgarrett

COMPUTED BY: M. Kimmel DATE: 061714
CHECKED BY: _____ DATE: _____

PROJECT REFERENCE NO.	SHEET NO.
W-5203D	3-A

STATE OF NORTH CAROLINA
DIVISION OF HIGHWAYS
SUB-REGIONAL & REGIONAL
LIST OF PIPES, ENDWALLS, ETC. (FOR PIPES 48" & UNDER)

NOTE: Invert Elevations are for Bid Purposes only and shall not be used for project construction stakeout. See "Standard Specifications For Roads and Structures, Section 300-5".

| STATION / SIZE / THICKNESS OR GAUGE | LOCATION (LT,RT, OR CL) | STRUCTURE NO. FROM | STRUCTURE NO. TO | TOP ELEVATION | INVERT ELEVATION | INVERT ELEVATION | SLOPE CRITICAL | DRAINAGE PIPE (RCP, CSP, CAAP, HDPE, or PVC) 12" | 15" | 18" | 24" | 30" | 36" | 42" | 48" | DO NOT USE RCP | DO NOT USE CSP | DO NOT USE CAAP | DO NOT USE HDPE | C.S. PIPE 12" | 15" | 18" | 24" | 36" | 42" | 48" | R.C. PIPE (CLASS III) 15" | 18" | 24" | 30" | 36" | 42" | 48" | R.C. PIPE (CLASS IV) 12" | 15" | 18" | 24" | 30" | 36" | 42" | 48" | ** R. C. PIPE (CLASS V) | ** R. C. PIPE CULVERTS, CONTRACTOR DESIGN PIPE | ** R. C. PIPE CULVERTS, CONTRACTOR DESIGN PIPE | 15" SIDE DRAIN PIPE | 18" SIDE DRAIN PIPE | ENDWALLS STD. 838.01, STD. 838.11 OR STD. 838.80 (UNLESS NOTED OTHERWISE) CU. YDS. R.C.P. | C.S.P. | QUANTITIES FOR DRAINAGE STRUCTURES * TOTAL L.F. FOR PAY QUANTITY SHALL BE COL. "A" + (1.3 X COL. "B") PER EACH (0' THRU 5.0') | LIN. *FT. A 5.0' THRU 10.0' | LIN. *FT. B 10.0' AND ABOVE | C.B. STD. 840.01 OR STD. 840.02 | FRAME, GRATES AND HOOD STANDARD 840.03 TYPE OF GRATE E | F | G | CONCRETE TRANSITIONAL SECTION CATCH BASIN | DROP INLET | D.I. STD. 840.14 OR STD. 840.15 | D.I. FRAME & GRATE STD. 840.16 | G.D.I. FRAME WITH TWO GRATES STD. 840.22 | G.D.I. TYPE "B" STD. 840.18 OR 840.27 | G.D.I. (N.S.) FRAME WITH TWO GRATES STD. 840.24 | M.H. FRAME & COVER STD. 840.54 | J.B. STD. 840.31 OR 840.32 | | 6" PERFORATED SUBDRAIN PIPE LIN.FT. | FOUNDATION CONDITIONING MATERIAL MINOR STRUCTURES | PIPE REMOVAL LIN.FT. | REMARKS |
|---|---|---

EARTHWORK SUMMARIES

CONCRETE ISLAND REMOVAL SUMMARY

SURVEY LINE	STATION	STATION	LOCATION LT/RT/CL	SY
-L- (SB)	18+40	21+23	LT	75.00
			TOTAL:	75.00
			SAY:	75.00

SUMMARY OF EARTHWORK

STATION	STATION	UNCL. EXCAV. (C.Y.)	UNDERCUT EXCAV. (C.Y.)	EMBANK. +25% (C.Y.)	BORROW (C.Y.)	TOTAL WASTE (C.Y.)
(NB) -L- 10+50	-L- 17+50	153	68	3,016	2,863	68
(SB) -L- 18+00	-L- 25+50	587	132	716	492	282
PROJECT TOTALS:		740	200	3,733	3,356	350
CONTINGENCY FOR UNDERCUT:			1,000			1,000
SELECT GRANULAR MATERIAL, CLASS III				1,250	1,250	
EST. 5% TO REPLACE TOP SOIL ON BORROW PIT:					230	
GRAND TOTALS:		740	1,200	4,983	4,836	1,350
SAY:			1,200		4,850	

NOTE: APPROXIMATE QUANTITIES ONLY. CLEARING & GRUBBING, UNCLASSIFIED EXCAVATION, REMOVAL OF EXISTING ASPHALT PAVEMENT AND CONCRETE ISLAND REMOVAL WILL BE PAID FOR AT THE LUMP SUM FOR "GRADING."

THESE EARTHWORK QUANTITIES ARE BASED IN PART ON SUBSURFACE DATA PROVIDED BY THE GEOTECHNICAL ENGINEERING UNIT.

LIMITS OF UNDERCUT SUMMARY

SURVEY LINE	STATION	STATION	LOCATION LT/RT/CL	DEPTH BELOW SUBGRADE (FT) *	EXTEND BEYOND FACE OF C&G (FT)	EXTEND BEYOND PROPOSED EOP (FT)
-L- (NB)	17+38	17+55	CL	3	2	2
-L- (SB)	17+92	18+83	CL	3	2	2
-L- (SB)	21+05	22+75	LT	3	2	2

* OR TO COMPETENT MATERIAL, WHICHEVER IS LESS.

6/21/00
14-JAN-2015 13:52
O:\RDY\DONE\ONSLOW\W-5203D_45333_4_OS LEFTS JVILLE DIST\ROADWAY\Proj\Plansheets\W-5203D_Rdy_tsh.dgn
pbrown1 At Time:0:22:44.59

COMPUTED BY: _____ DATE: _____
CHECKED BY: _____MPK_____ DATE: __05-29-14

11/19/13

PROJECT NO.	SHEET NO.
W-5203D	3-C

STATE OF NORTH CAROLINA
DIVISION OF HIGHWAYS

SUMMARY OF SUBSURFACE DRAINAGE

LINE	Station	Station	Location LT/RT/CL	Drain Type* UD/BD/SD	LF
CONTINGENCY				SD	100
				TOTAL LF:	100

***UD = Underdrain**
***BD = Blind Drain**
***SD = Subsurface Drain**

SUMMARY OF ROCK PLATING

LINE	Beginning Slope	Approx. Station	Ending Slope	Approx. Station	Location LT/RT	Rock Plating Detail No.	Riprap	SY
-L-	1.5:1	12+90+/-	2.5:1	14+75+/-	LT	1		350
							TOTAL SY:	350

***Use Class 1, 2 or B riprap if riprap class is not shown for rock plating location.**

PROJECT REFERENCE NO.	SHEET NO.
W-5203D	4

NOTE:
USE ROCK PLATING FROM -L- STA. 12+90+/- TO -L- STA. 14+75+/- (LEFT) AND EXTEND ROCK PLATING LIMITS TO 2.5:1 (H:V) SLOPE. (SEE ROCK PLATING DETAIL NO. 1 AND GEOTEXTILE OVERLAP DETAIL ON SHEET 2-E).

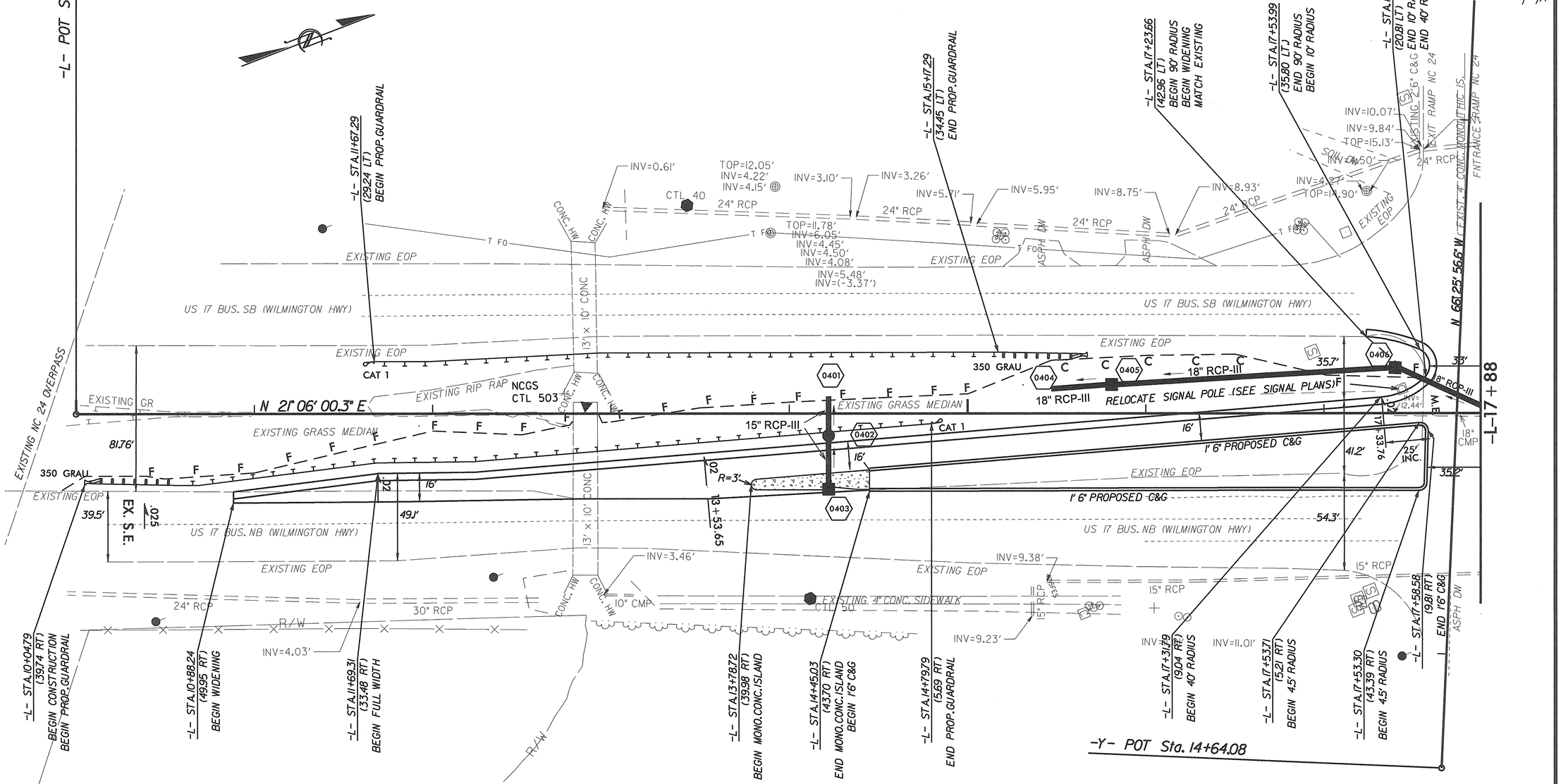

Scale 1" = 60' (Half Size Sheet, 11x17)
Scale 1" = 30' (Full Size Sheet, 22x34)

DETAIL 1
STANDARD 'V' DITCH
(Not to Scale)

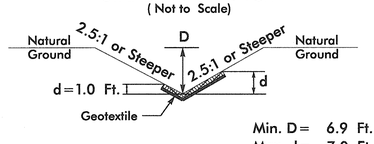

Min. D = 6.9 Ft.
Max. d = 7.0 Ft.
Type of Liner = Class B Rip-Rap

FROM -L- STA. 12+90+/- TO -L- STA. 14+75+/-

DETAIL 2
MEDIAN V DITCH
(Not to Scale)

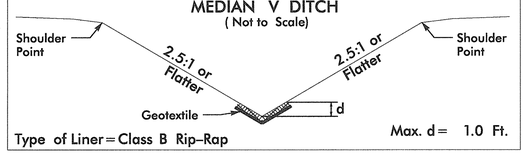

Max. d = 1.0 Ft.
Type of Liner = Class B Rip-Rap

FROM -L- STA. 14+75+/- TO -L- STA. 15+51+/-

DETAIL 3
MEDIAN V DITCH
(Not to Scale)

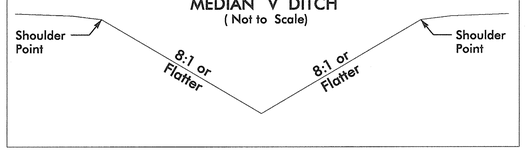

FROM -L- STA. 15+81+/- TO -L- STA. 17+50+/-

REVISIONS

8/17/99

12-JAN-2015 14:05
R:\HDY-CONNELLY-CONSLOW\W-5203D_45333.1.4_OS LEFTS_IVILLE DIST\ROADWAY\Proj\Plansheets\W-5203D_PSH 4.dgn
mkimmel AT DOT\27446

PROJECT REFERENCE NO.	SHEET NO.
W-5203D	5

NORTH CAROLINA PROFESSIONAL SEAL 037439 ENGINEER DAVID B. LEONARD

DIVISION DESIGN ENGINEER 1/20/15

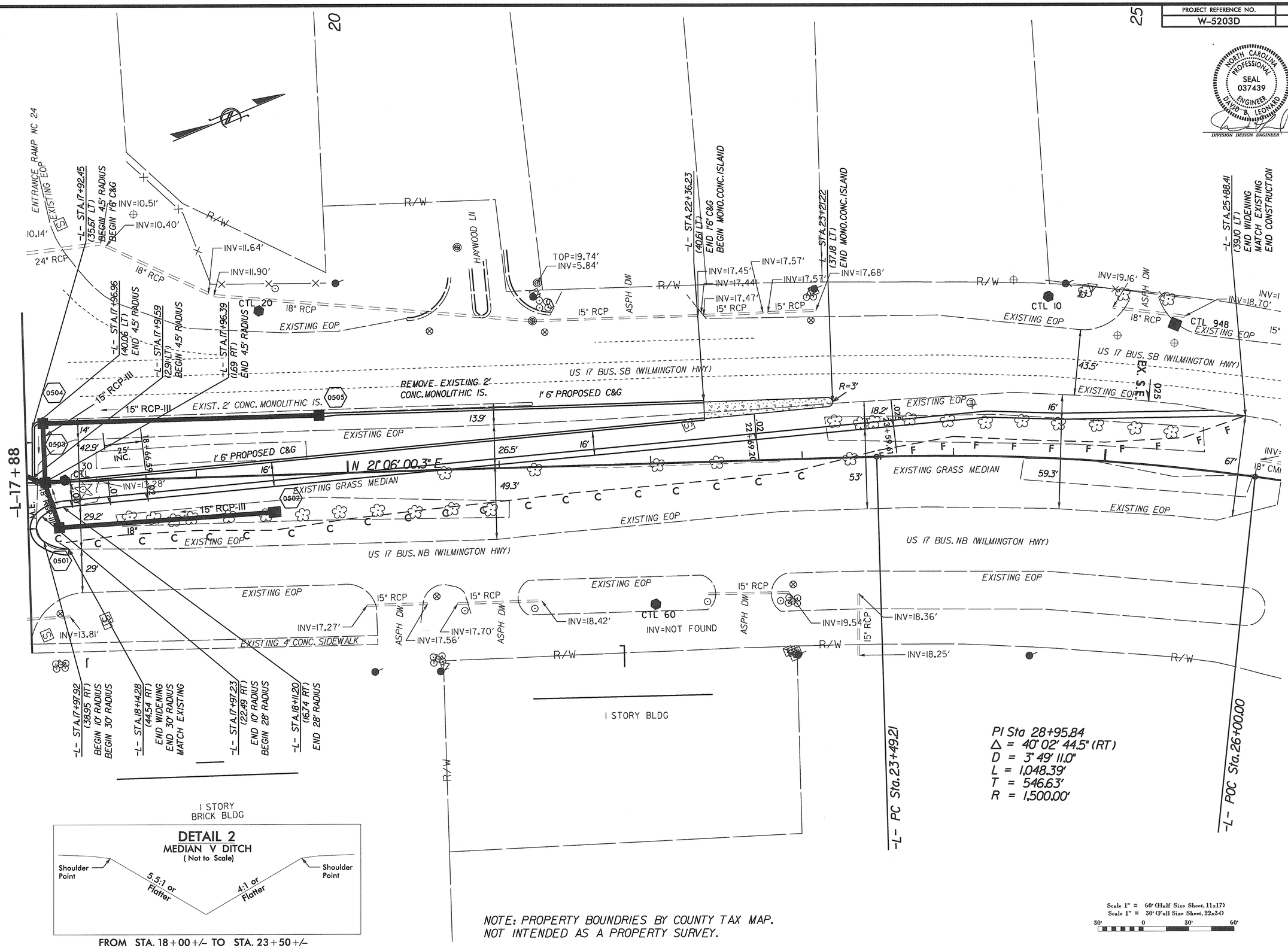

DETAIL 2
MEDIAN V DITCH
(Not to Scale)

FROM STA. 18+00 +/- TO STA. 23+50 +/-

NOTE: PROPERTY BOUNDRIES BY COUNTY TAX MAP.
NOT INTENDED AS A PROPERTY SURVEY.

REVISIONS

8/17/99

09-JAN-2015 14:55
C:\APWORKING\DESIGN\W-5203D_45333.1.4_OS_LEFTS_IVILLE_DIST\ROADWAY\Proj\Plansheets\W-5203D_PSH_5.dgn
mk:name
At 133.0174450

PROJECT REFERENCE NO.	SHEET NO.
W-5203D	6

NORTH CAROLINA PROFESSIONAL SEAL 037439 ENGINEER DAVID B. LEONARD

DIVISION DESIGN ENGINEER 1/28/15

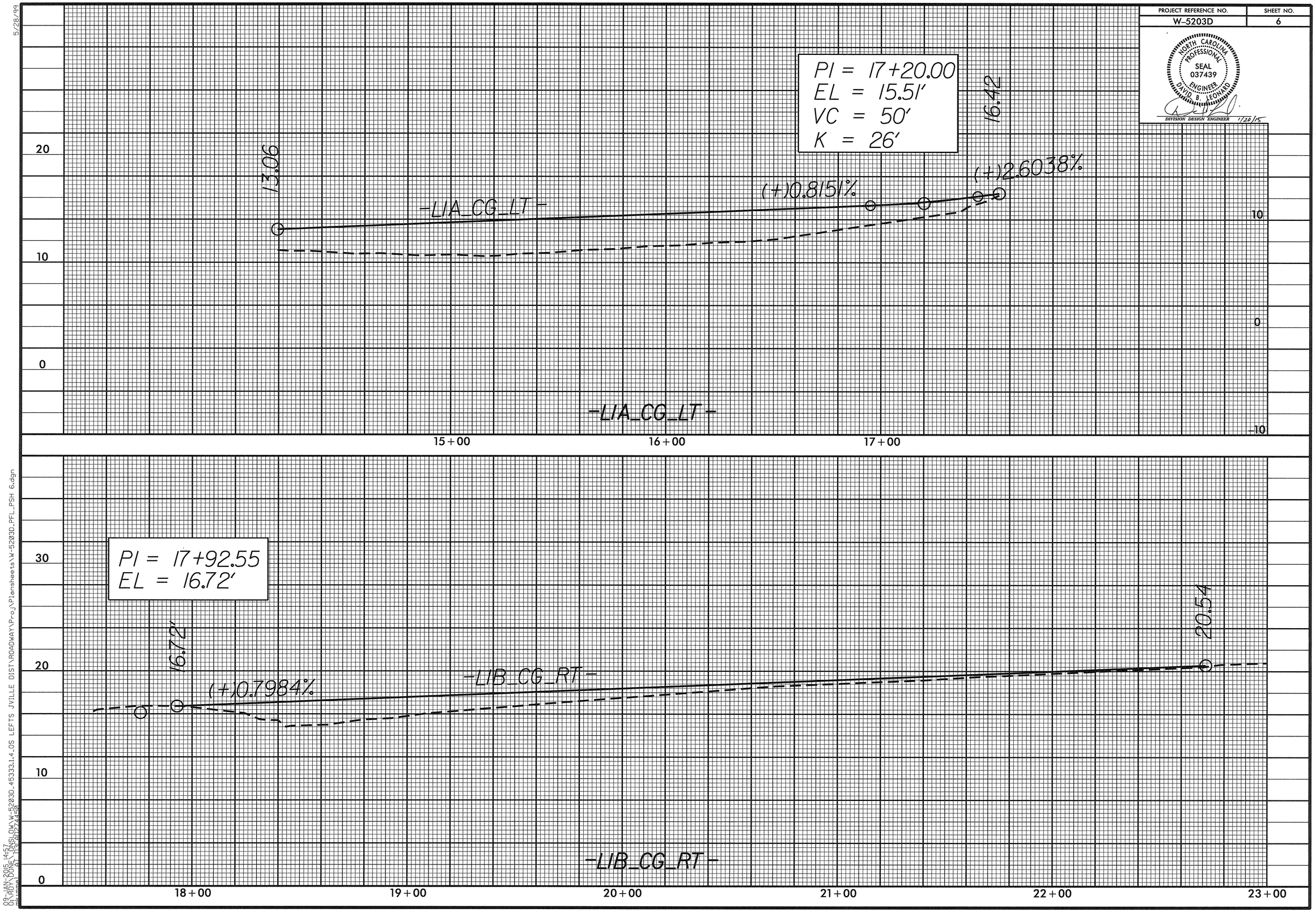

5/28/99

09-JAN-2015 14:57
C:\HDA\DONE_LONG\DWG\W-5203D_45333.L4_OS LEFTS JVILLE DIST\ROADWAY\Proj\Plansheets\W-5203D_PFL_PSH 6.dgn

PROJECT REFERENCE NO.	SHEET NO.
W-5203D	PM-1

PAVEMENT MARKING LAYOUT

NORTH CAROLINA PROFESSIONAL SEAL 037439 ENGINEER DAVID B. LEONARD

DIVISION DESIGN ENGINEER 1/22/15

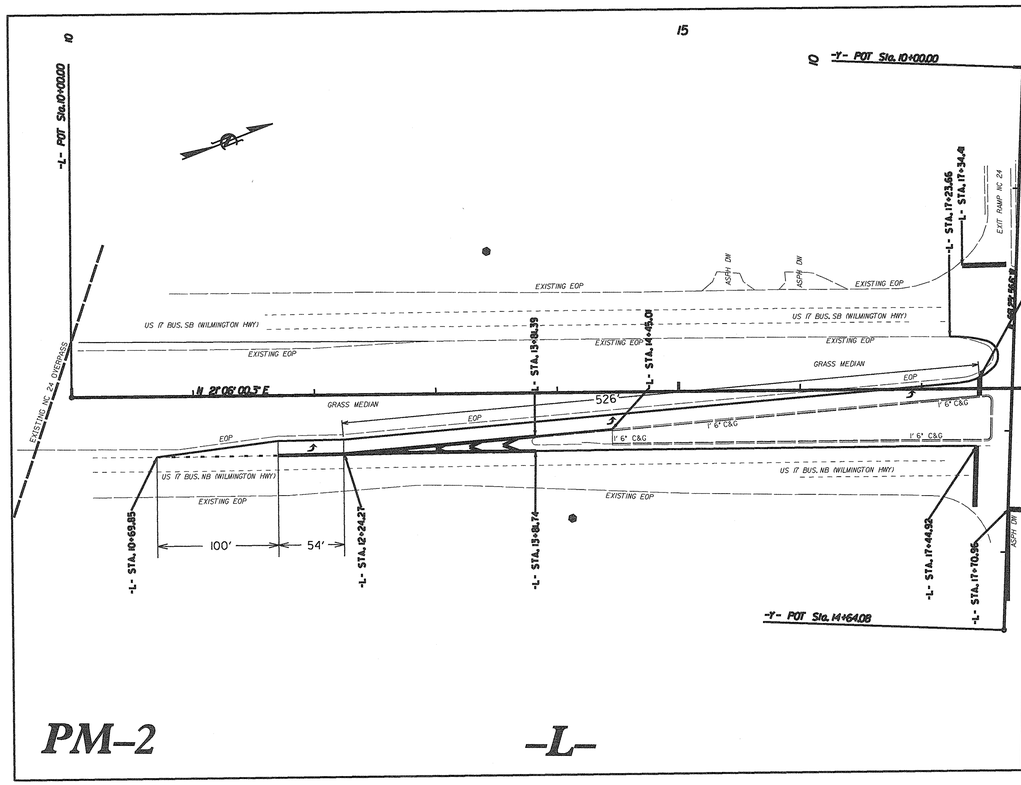

PM-2 -L-

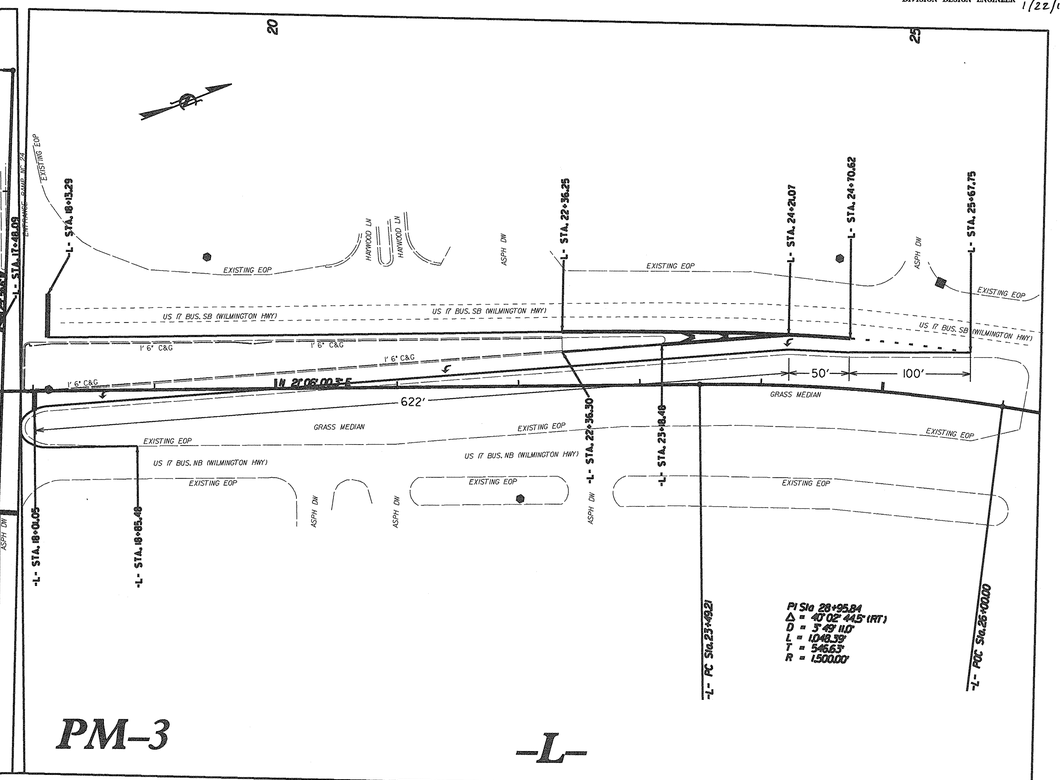

PM-3 -L-

ROADWAY STANDARD DRAWINGS

THE FOLLOWING ROADWAY STANDARDS AS APPEAR IN "ROADWAY STANDARD DRAWINGS" - PROJECT SERVICES UNIT - N.C. DEPARTMENT OF TRANSPORTATION - RALEIGH, N.C., DATED JANUARY 2012 ARE APPLICABLE TO THIS PROJECT AND BY REFERENCE HEREBY ARE CONSIDERED A PART OF THESE PLANS:

STD.NO.	TITLE
1205.01	PAVEMENT MARKINGS - LINE TYPES AND OFFSETS
1205.02	PAVEMENT MARKINGS - TWO-LANE AND MULTI-LANE ROADWAYS
1205.03	PAVEMENT MARKINGS - EXITS AND ENTRANCE RAMPS
1205.04	PAVEMENT MARKINGS - INTERSECTIONS
1205.05	PAVEMENT MARKINGS - TURN LANES
1205.08	PAVEMENT MARKINGS - SYMBOLS AND WORD MESSAGES
1205.09	PAVEMENT MARKINGS - PAINTED ISLANDS
1250.01	RAISED PAVEMENT MARKERS - INSTALLATION SPACING
1251.01	RAISED PAVEMENT MARKERS - PERMANENT AND TEMPORARY
1253.01	RAISED PAVEMENT MARKERS - SNOWPLOWABLE

GENERAL NOTES

THE FOLLOWING GENERAL NOTES APPLY AT ALL TIMES FOR THE DURATION OF THE CONSTRUCTION PROJECT EXCEPT WHEN OTHERWISE NOTED IN THE PLAN OR DIRECTED BY THE ENGINEER.

PAVEMENT MARKINGS AND MARKERS

A) INSTALL PAVEMENT MARKINGS AND PAVEMENT MARKERS ON THE FINAL SURFACE AS FOLLOWS:

ROAD NAME	MARKING	MARKER
ALL ROADS	THERMOPLASTIC	SNOWPLOWABLE

B) TIE PROPOSED PAVEMENT MARKING LINES TO EXISTING PAVEMENT MARKING LINES.

C) REMOVE/REPLACE ANY CONFLICTING/DAMAGED PAVEMENT MARKINGS AND MARKERS BY THE END OF EACH DAY'S OPERATION.

D) TRACE THE PROPOSED MONOLITHIC ISLAND LOCATIONS WITH PROPER COLOR PAVEMENT MARKINGS PRIOR TO INSTALLATION. PLACE TUBULAR MARKERS TO DELINEATE ANY PROPOSED MONOLITHIC ISLANDS.

MISCELLANEOUS

E) LAW ENFORCEMENT SHALL BE USED TO MAINTAIN TRAFFIC THROUGH THE WORK AREA AND/OR INTERSECTIONS AS DIRECTED BY THE ENGINEER.

NOT TO SCALE

REVISIONS

8/17/99

22-JAN-2015 13:15
C:\ADY\DOWE_CONSLOW\W-5203D_45333.1.4_OS LEWIS JVILLE DIST\ROADWAY\Proj\Plansheets\W-5203D_Rdy_PM Layout.dgn
Lennon, Al (Misc) (Z7A450)

PROJECT REFERENCE NO.	SHEET NO.
W-5203D	PM-2

NORTH CAROLINA PROFESSIONAL SEAL 037439 ENGINEER DAVID B. LEONARD

DIVISION DESIGN ENGINEER 1/20/15

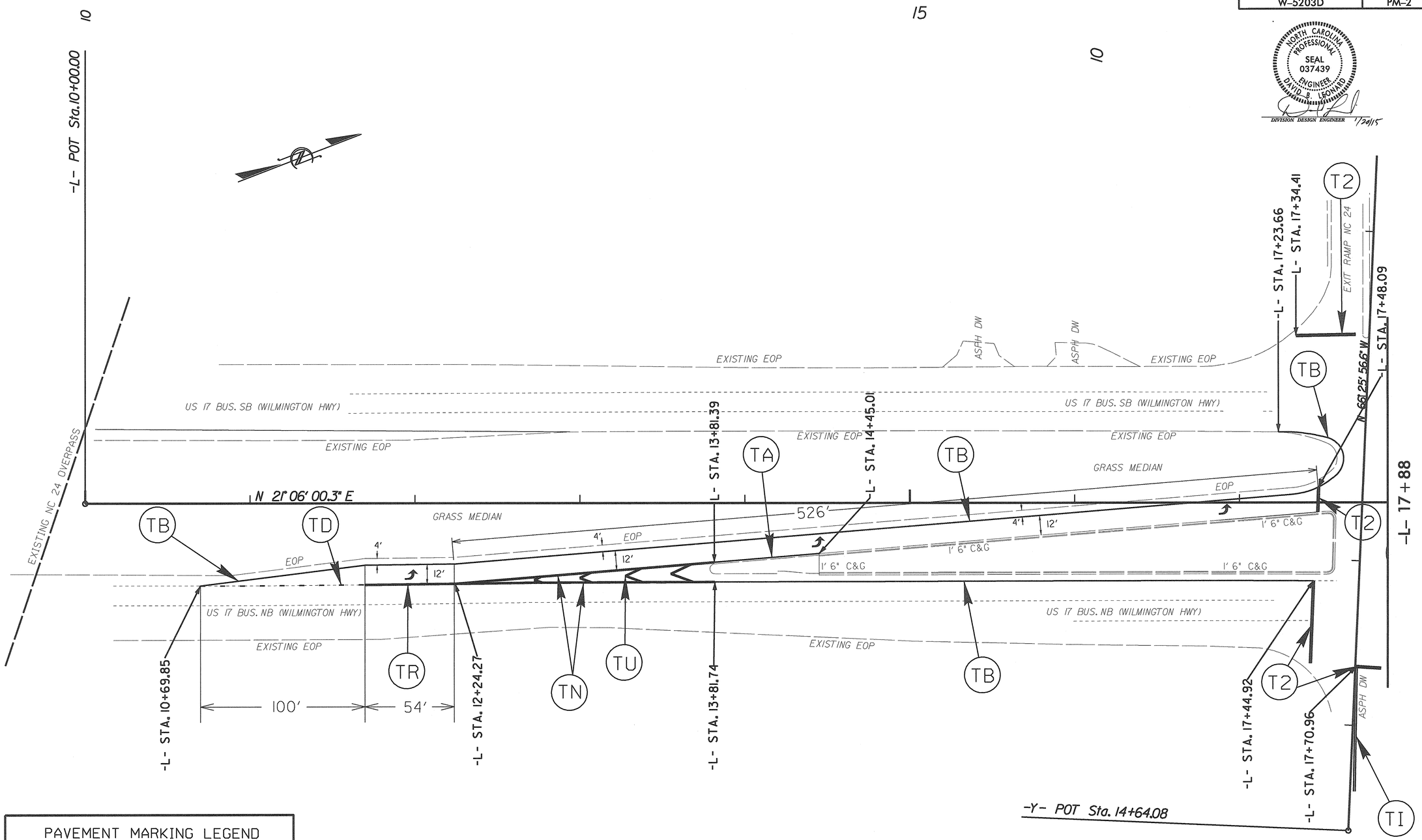

PAVEMENT MARKING LEGEND

T2 = WHITE STOPBAR (24", 120 MIL)
TA = WHITE EDGELINE (4", 90 MIL)
TB = YELLOW EDGELINE (4", 90 MIL)
TD = WHITE MINI-SKIP 3' - 9'/SP (4", 120 MIL)
TI = YELLOW DOUBLE CENTER (4", 120 MIL)
TN = WHITE GORELINE (8", 90 MIL)
TR = WHITE SOLID LANE LINE (8", 120 MIL)
TU = WHITE DIAGONAL (12", 90 MIL)

Scale 1" = 60' (Half Size Sheet, 11x17)
Scale 1" = 30' (Full Size Sheet, 22x34)
30' 0 30' 60'

REVISIONS

8/17/99

08-JAN-2015 16:35
BY: ROY DOONE (ONSLOW)W-52030_45333.1.4_OS LEFTS_..\VILLE DIST\ROADWAY\Proj\Plansheets\W-52030_Rdy_TC_PSH4.dgn
mkimmel AT 1:1 ON 27x44=60

PROJECT REFERENCE NO.	SHEET NO.
W-5203D	PM-3

NORTH CAROLINA PROFESSIONAL SEAL 037439 ENGINEER DAVID B. LEONARD

DIVISION DESIGN ENGINEER 1/20/15

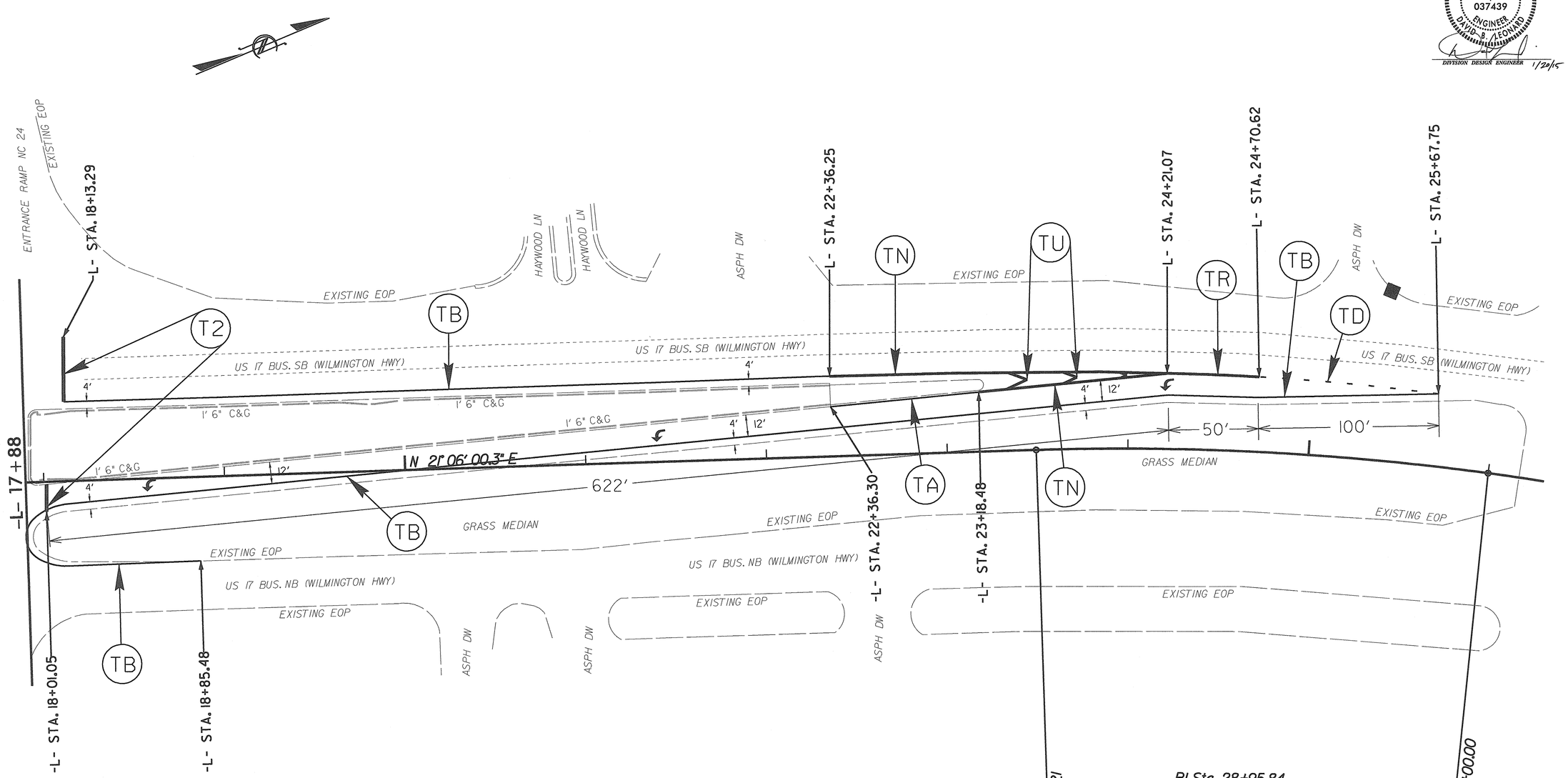

PI Sta 28+95.84
Δ = 40° 02' 44.5" (RT)
D = 3° 49' 11.0"
L = 1,048.39'
T = 546.63'
R = 1,500.00'

Scale 1" = 60' (Half Size Sheet, 11x17)
Scale 1" = 30' (Full Size Sheet, 22x34)

30' 0 30' 60'

PAVEMENT MARKING LEGEND

T2 = WHITE STOPBAR (24", 120 MIL)
TA = WHITE EDGELINE (4", 90 MIL)
TB = YELLOW EDGELINE (4", 90 MIL)
TD = WHITE MINI-SKIP 3' - 9'/SP (4", 120 MIL)
TI = YELLOW DOUBLE CENTER (4", 120 MIL)
TN = WHITE GORELINE (8", 90 MIL)
TR = WHITE SOLID LANE LINE (8", 120 MIL)
TU = WHITE DIAGONAL (12", 90 MIL)

REVISIONS

8/17/99

08-JAN-2015 16:39
mkimmel A:\W5203D_45333.i.4.OS LEFTS_JWILLE DIST\ROADWAY\Proj\Plansheets\W-5203D_Rdy_TC_PSH5.dgn

TIP PROJECT: W-5203D

THESE EROSION AND SEDIMENT CONTROL PLANS COMPLY WITH THE REGULATIONS SET FORTH BY THE NCG-010000 GENERAL CONSTRUCTION PERMIT EFFECTIVE AUGUST 3, 2011 ISSUED BY THE NORTH CAROLINA DEPARTMENT OF ENVIRONMENT AND NATURAL RESOURCES DIVISION OF WATER QUALITY.

STATE OF NORTH CAROLINA
DIVISION OF HIGHWAYS

PLAN FOR PROPOSED
HIGHWAY EROSION CONTROL

STATE	STATE PROJECT REFERENCE NO.	SHEET NO.	TOTAL SHEETS
N.C.	W-5203D	EC-1	

STATE PROJ. NO.	F.A. PROJ. NO.	DESCRIPTION

Prepared In the Office of:

DIVISON 3 DDC UNIT
5501 Barbados Blvd.
Castle Hayne, NC 28429
By: D. La Fave, No. 3570

2012 STANDARD SPECIFICATIONS

Roadway Standard Drawings

The following roadway english standards as appear in "Roadway Standard Drawings"– Roadway Design Unit – N. C. Department of Transportation – Raleigh, N. C., dated January 2012 and the latest revison thereto are applicable to this project and by reference hereby are considered a part of these plans.

1605.01 Temporary Silt Fence
1631.01 Matting Installation
1632.03 Rock Inlet Sediment Trap Type C
1635.02 Rock Pipe Inlet Sediment Trap Type B
1640.01 Coir Fiber Baffle

Stormwater Discharge Outfall (SDO)

SDO Number	Station	Distance from ℄	Description
SDO-1	-L- 12+72	10' LT	WATTLE
SDO-2	-L- 13+21	9' RT	EARTHEN DAM WITH SKIMMER

Temporary Liner (Matting) in Ditchline

Station to Station	LT/RT ℄	Matting Required (yds²)
-L- 13+64 TO 15+32	LT	1620 SY
-L- 19+63 TO 23+36	RT-LT	295 SY

EROSION AND SEDIMENT CONTROL MEASURES

Std. #	Description	Symbol
1605.01	Temporary Silt Fence	
1606.01	Special Sediment Control Fence	
1622.01	Temporary Berms and Slope Drains	
1630.02	Silt Basin Type B	
1630.03	Temporary Silt Ditch	TD
1630.04	Stilling Basin	
1630.05	Temporary Diversion	TD
1630.06	Special Stilling Basin	
	Rock Inlet Sediment Trap:	
1632.01	Type A	A
1632.02	Type B	B
1632.03	Type C	C

Std. #	Description	Symbol
1633.01	Temporary Rock Silt Check Type-A	
DETAIL	Temporary Rock Silt Check Type-A with Matting and Polyacrylamide (PAM)	
1633.02	Temporary Rock Silt Check Type-B	
DETAIL	Wattle / Coir Fiber Wattle	
DETAIL	Wattle / Coir Fiber Wattle with Polyacrylamide (PAM)	
1634.01	Temporary Rock Sediment Dam Type-A	
1634.02	Temporary Rock Sediment Dam Type-B	
1635.01	Rock Pipe Inlet Sediment Trap Type-A	
1635.02	Rock Pipe Inlet Sediment Trap Type-B	
DETAIL	Skimmer Basin	
DETAIL	Tiered Skimmer Basin	
DETAIL	Infiltration Basin	
DETAIL	Earthen Dam with Skimmer	

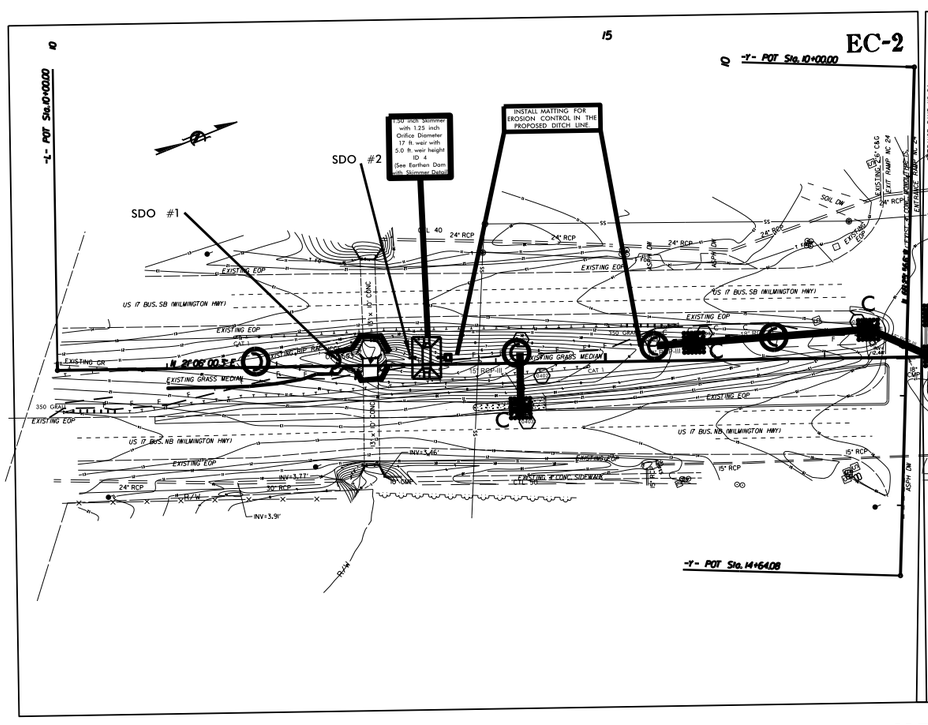

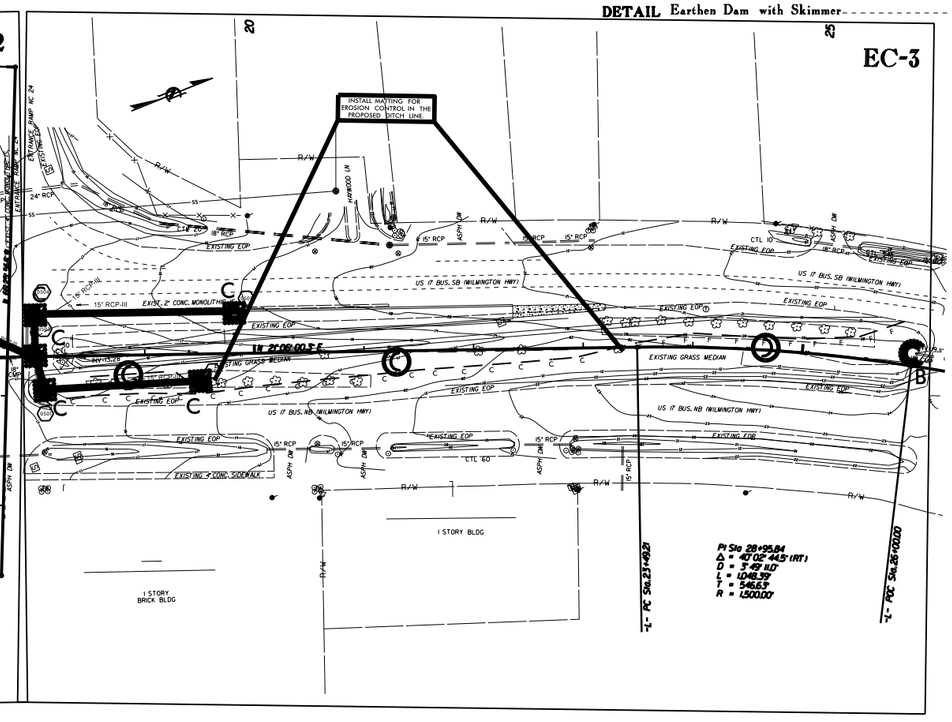

N.T.S.

1:4.25 JAN-20-15 16:57
ROBERTSONVILLE DIST\ROADWAY\Proj\Plansheets\W-5203D_Rdy_EC_TSH_EC.dgn
imms1 AT D3CADD24480

PROJECT REFERENCE NO.	SHEET NO.
W-5203D	EC-2

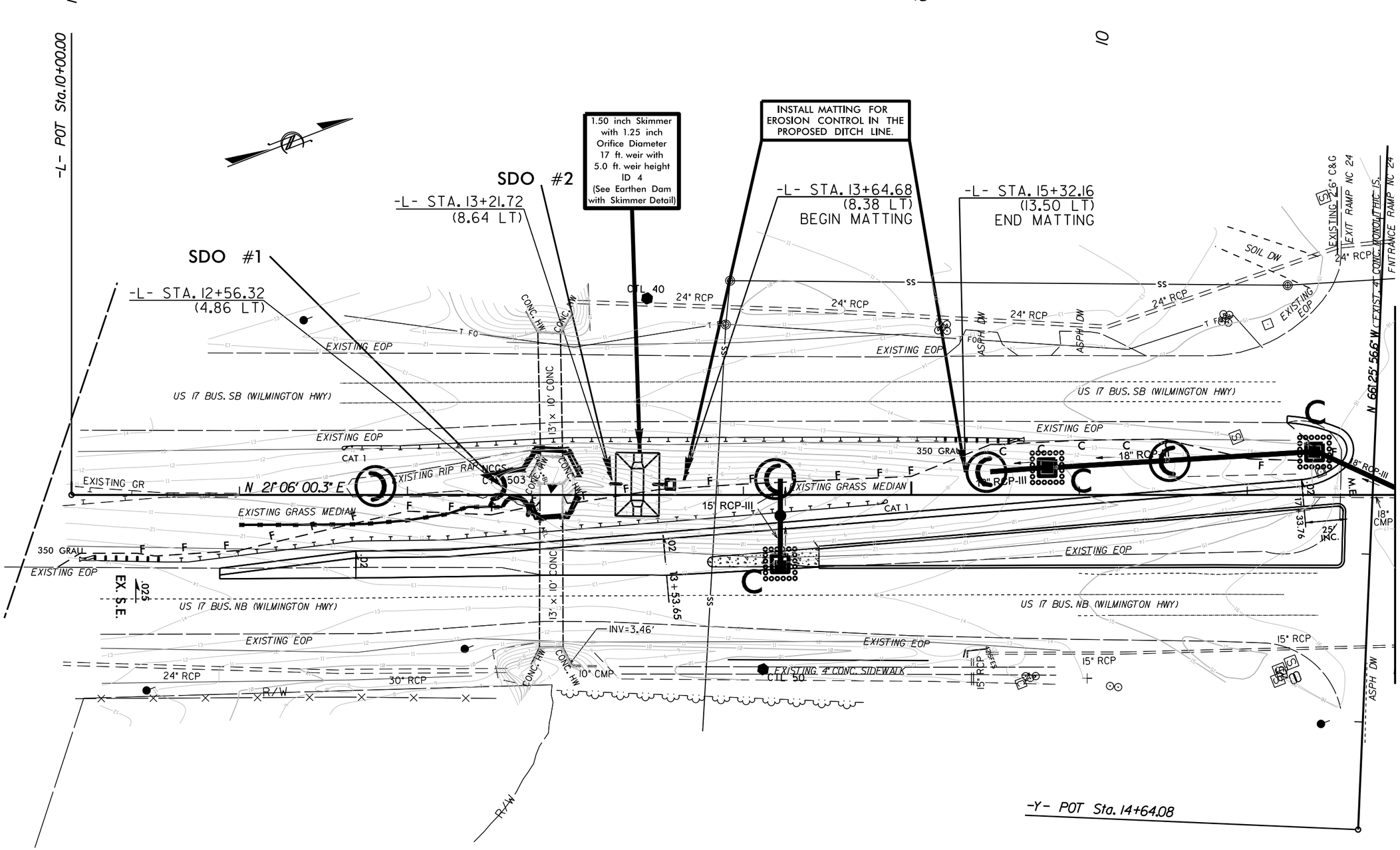

Scale 1" = 60' (Half Size Sheet, 11x17)
Scale 1" = 30' (Full Size Sheet, 22x34)

NOTE: PROPERTY BOUNDRIES BY COUNTY TAX MAP.
NOT INTENDED AS A PROPERTY SURVEY.

REVISIONS

8/17/99

12-JAN-2015 14:26
G:\RDY\DONE\ONSLOW\W-5203D_45333.1.4_OS LEFTS_JVILLE DIST\ROADWAY\Proj\Plansheets\W-5203D_PSH_EC2.dgn
Bentley Systems, Inc. V8 XM (08.11.07.443)

PROJECT REFERENCE NO.	SHEET NO.
W-5203D	EC-3

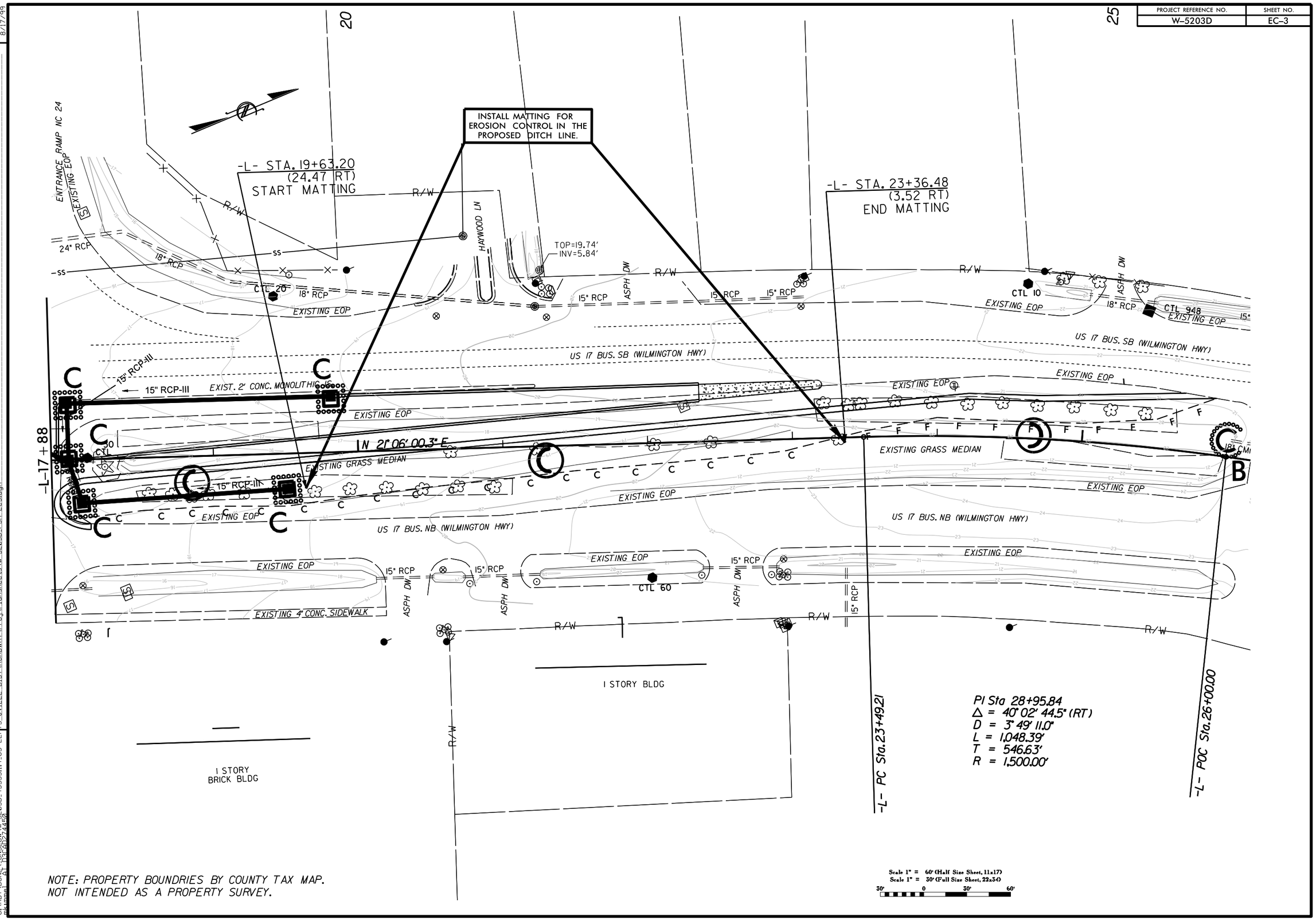

NOTE: PROPERTY BOUNDRIES BY COUNTY TAX MAP.
NOT INTENDED AS A PROPERTY SURVEY.

REVISIONS

8/17/99

12-JAN-2015 14:27
C:\ADY\DONE\ONSLOW\W-5203D_45333.1.4_OS_LEFTS_JVILLE_DIST\ROADWAY\Proj\Plansheets\W-5203D_PSH_EC3.dgn
ek (mmc) At Time: 0:02:44.50

PROJECT REFERENCE NO.	SHEET NO.
W-5203D	Sig. 1.0

PHASING DIAGRAM

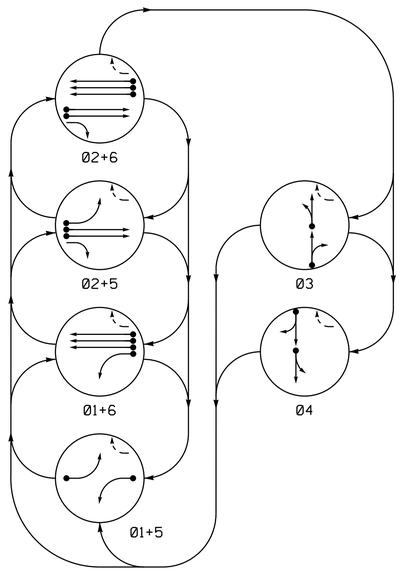

PHASING DIAGRAM DETECTION LEGEND

- DETECTED MOVEMENT
- UNDETECTED MOVEMENT (OVERLAP)
- UNSIGNALIZED MOVEMENT
- PEDESTRIAN MOVEMENT

TABLE OF OPERATION

SIGNAL FACE	PHASE 01+5	01+6	02+5	02+6	03	04	FLASH
11	←	←	~~R~~	~~R~~	~~R~~	~~R~~	~~R~~
21, 22	R	R	G	G	R	R	Y
31	R	R	R	R	G	R	R
32	R	R	R	R	G	R	R
41	R	R	R	R	R	G	R
42	R	R	R	R	R	G	R
51	←	~~R~~	←	~~R~~	~~R~~	~~R~~	~~R~~
61, 62, 63	R	G	R	G	R	R	Y

SIGNAL FACE I.D.

All Heads L.E.D.

OASIS 2070 LOOP & DETECTOR INSTALLATION CHART

INDUCTIVE LOOPS					DETECTOR PROGRAMMING							
LOOP	SIZE (FT)	DISTANCE FROM STOPBAR (FT)	TURNS	NEW LOOP	PHASE	CALLING	EXTENSION	FULL TIME DELAY	STRETCH TIME	DELAY TIME	SYSTEM LOOP	NEW CARD
1A	6X40	0	2-4-2	Y	1	Y	Y	-	-	-	-	-
2A	6X6	300	4	Y	2	Y	Y	-	-	-	-	-
2B	6X6	300	4	Y	2	Y	Y	-	-	-	-	-
3A	6X60	0	2-4-2	-	3	Y	Y	-	1.0	5	-	-
3B	6X30	0	2-4-2	Y	3	Y	Y	-	-	5	-	-
4A	6X60	0	2-4-2	-	4	Y	Y	-	1.0	-	-	-
4B	6X30	0	2-4-2	-	4	Y	Y	-	-	15	-	-
4C	6X30	0	2-4-2	Y	4	Y	Y	-	-	5	-	-
5A	6X40	0	2-4-2	Y	5	Y	Y	-	-	-	-	-
6A	6X6	300	5	Y	6	Y	Y	-	-	-	-	-
6B	6X6	300	5	Y	6	Y	Y	-	-	-	-	-
6C	6X6	300	5	Y	6	Y	Y	-	-	-	-	Y
S16	6X6	+130	4	-	-	-	-	-	-		Y	-
S17	6X6	+130	4	-	-	-	-	-	-	-	Y	-
S18	6X6	+130	4	-	-	-	-	-	-	-	Y	-
S19	6X6	+130	4	-	-	-	-	-	-	-	Y	-
S20	6X6	+130	4	-	-	-	-	-	-	-	Y	-

6 Phase
Fully Actuated
Jacksonville City System

NOTES

1. Refer to "Roadway Standard Drawings NCDOT" dated January 2012 and "Standard Specifications for Roads and Structures" dated January 2012.
2. Do not program signal for late night flashing operation unless otherwise directed by the Engineer.
3. Phase 1 and/or phase 5 may be lagged.
4. The order of phase 3 and phase 4 may be reversed.
5. Reposition existing signal heads numbered 62 and 63.
6. Set all detector units to presence mode.
7. In the event of loop replacement, refer to the current ITS and Signals Design Manual and submit a Plan of Record to the Signal Design Section.

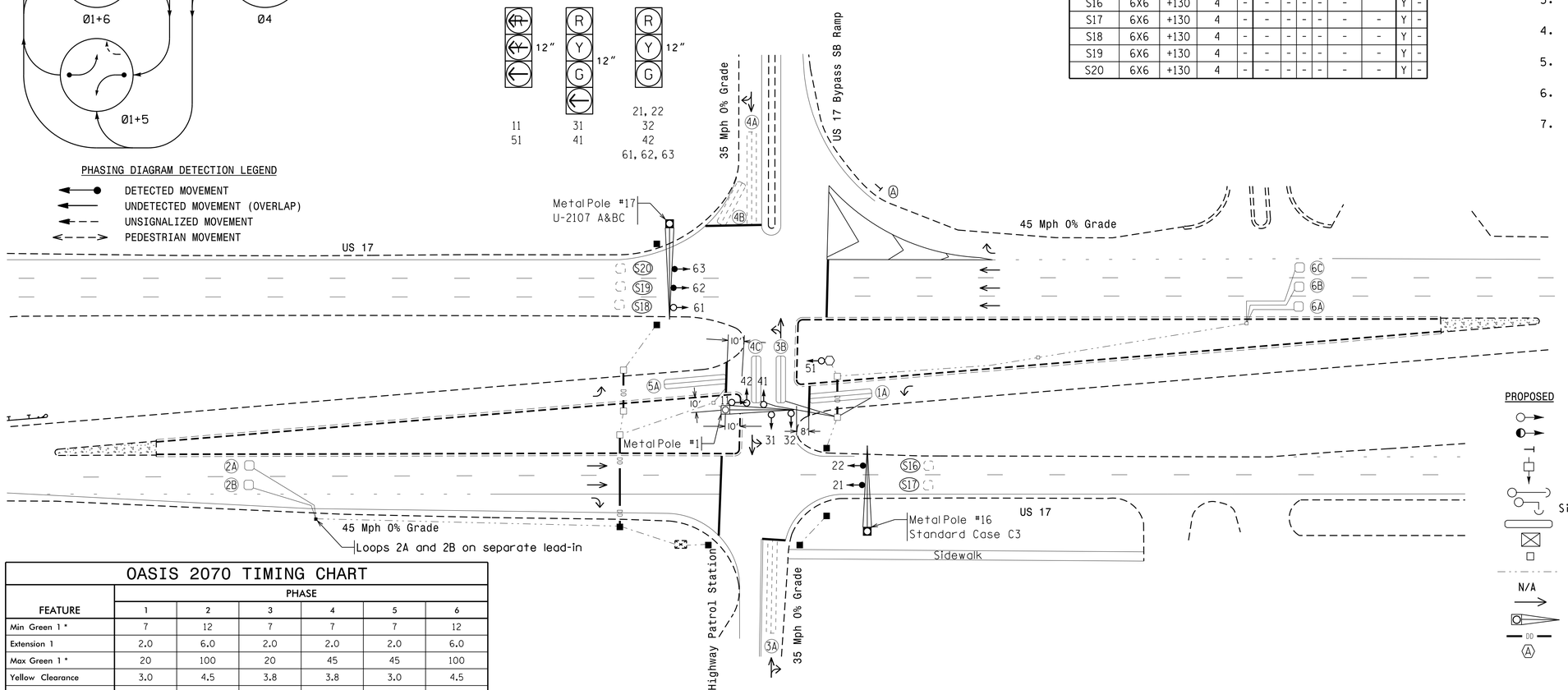

LEGEND

PROPOSED		EXISTING
	Traffic Signal Head	
	Modified Signal Head	N/A
	Sign	
	Pedestrian Signal Head With Push Button & Sign	
	Signal Pole with Guy	
	Signal Pole with Sidewalk Guy	
	Inductive Loop Detector	
	Controller & Cabinet	
	Junction Box	
	2-in Underground Conduit	
N/A	Right of Way	
	Directional Arrow	
	Metal Pole with Mastarm	
	Directional Drill	N/A
	"YIELD" Sign (R1-2)	

OASIS 2070 TIMING CHART

FEATURE	PHASE 1	2	3	4	5	6
Min Green 1 *	7	12	7	7	7	12
Extension 1	2.0	6.0	2.0	2.0	2.0	6.0
Max Green 1 *	20	100	20	45	45	100
Yellow Clearance	3.0	4.5	3.8	3.8	3.0	4.5
Red Clearance	2.9	1.0	3.3	3.3	3.2	1.0
Walk 1 *	-	-	-	-	-	-
Don't Walk 1	-	-	-	-	-	-
Seconds Per Actuation *	-	1.5	-	-	-	1.0
Max Variable Initial *	-	34	-	-	-	34
Time Before Reduction *	-	15	-	-	-	15
Time To Reduce *	-	45	-	-	-	45
Minimum Gap	-	3.0	-	-	-	3.0
Recall Mode	-	MIN RECALL	-	-	-	MIN RECALL
Vehicle Call Memory	-	YELLOW	-	-	-	YELLOW
Dual Entry	-	-	-	-	-	-
Simultaneous Gap	ON	ON	ON	ON	ON	ON

* These values may be field adjusted. Do not adjust Min Green and Extension times for phases 2 and 6 lower than what is shown. Min Green for all other phases should not be lower than 4 seconds.

This Plan Supersedes Plan Sealed 3/21/2012

Signal Upgrade

Prepared in the Offices of:
Transportation Mobility and Safety Division
STATE OF NORTH CAROLINA DEPARTMENT OF TRANSPORTATION
Signal Design Section
750 N.Greenfield Pkwy,Garner,NC 27529

SCALE 0 40 1"=40'

US 17 Business
at
NC 24-53 WB Ramp/
Highway Patrol Station

Division 3 Onslow County Jacksonville

PLAN DATE: January 2015	REVIEWED BY: PLA
PREPARED BY: JPG	REVIEWED BY:

REVISIONS	INIT.	DATE

SEAL
NORTH CAROLINA PROFESSIONAL SEAL 23489 ENGINEER PAMELA L. ALEXANDER

DocuSigned by: P L Alexander 1/14/2015
B4756E00CE4E46D...
DATE

SIG. INVENTORY NO. 03-0922

14-JAN-2015 13:23
S:\TMS\SUPPORT\ITS\Signals\Signal Design Section\Eastern Region\Div-03\03-0922\03-0922_sig_dsn_20150114.dgn
jpalloway

PROJECT REFERENCE NO.	SHEET NO.
W-5203D	Sig 1.1

EDI MODEL 2010ECL CONFLICT MONITOR PROGRAMMING DETAIL

(remove jumpers and set switches as shown)

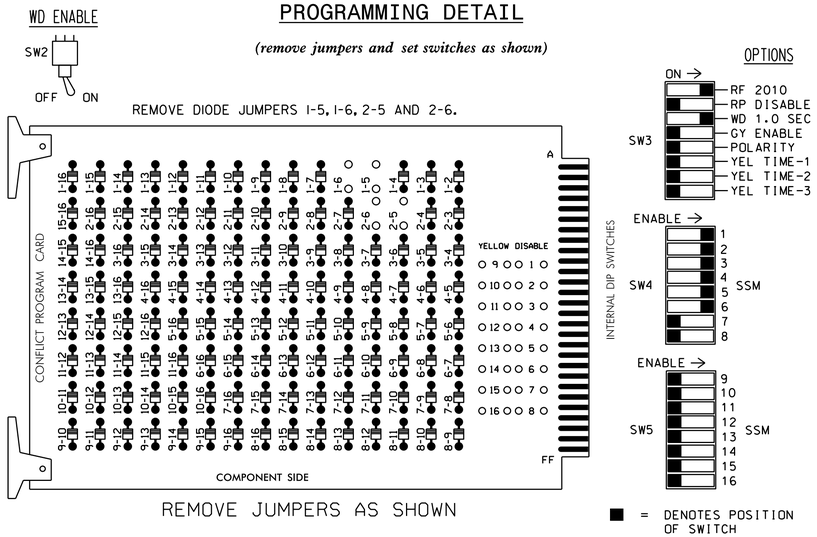

REMOVE JUMPERS AS SHOWN

NOTES:

1. Card is provided with all diode jumpers in place. Removal of any jumper allows its channels to run concurrently.
2. Make sure jumpers SEL2-SEL5 are present on the monitor board.

NOTES

1. To prevent "flash-conflict" problems, insert red flash program blocks for all unused vehicle load switches in the output file. The installer shall verify that signal heads flash in accordance with the Signal Plans.
2. Ensure that Red Enable is active at all times during normal operation. To prevent Red Failures on unused monitor channels, tie unused red monitor inputs 7,8, 9,10,11,12,13,14,15 & 16 to load switch AC+ per the cabinet manufacturer's instructions.
3. Enable Simultaneous Gap-Out for all phases.
4. Program phases 2 and 6 for Variable Initial and Gap Reduction.
5. Program phases 2 and 6 for Start Up In Green.
6. Program phases 2 and 6 for Yellow Flash.
7. The cabinet and controller are part of the Jacksonville City System

EQUIPMENT INFORMATION

CONTROLLER.....2070L
CABINET .....332 W/ AUX
SOFTWARE .....ECONOLITE OASIS
CABINET MOUNT.....BASE
OUTPUT FILE POSITIONS..18 (12-STD, 6-AUX)
LOAD SWITCHES USED.....S1,S2,S3,S4,S5,S6
PHASES USED.....1,2,3,4,5,6
OVERLAPS.....NONE

SIGNAL HEAD HOOK-UP CHART

LOAD SWITCH NO.	S1	S2	S2P	S3		S4		S4P	S5	S6	S6P	S7	S8	S8P	S9	S10	S11	S12	S13	S14
PHASE	1	2	2 PED	3		4		4 PED	5	6	6 PED	7	8	8 PED	OLA	OLB	SPARE	OLC	OLD	SPARE
SIGNAL HEAD NO.	11	21,22	NU	31	32	41	42	NU	51	61, 62,63	NU	NU	NU	NU	NU	NU	NU	NU	NU	NU
RED		128		116	116	101	101			134										
YELLOW		129		117	117	102	102			135										
GREEN		130		118	118	103	103			136										
RED ARROW	125								131											
YELLOW ARROW	126								132											
GREEN ARROW	127			118		103			133											

NU = Not Used

INPUT FILE POSITION LAYOUT

(front view)

		1	2	3	4	5	6	7	8	9	10	11	12	13	14
FILE "I"	U	Ø 1 / 1A	Ø 2 / 2A	Ø 3 / 3A	Ø 4 / 4A	Ø 4 / 4B	Ø 4 / 4C	SLOT EMPTY	SLOT EMPTY	SYS. DET. S16	SLOT EMPTY	SLOT EMPTY	SLOT EMPTY	SLOT EMPTY	FS / DC ISOLATOR
	L	NOT USED	Ø 2 / 2B	Ø 3 / 3B	NOT USED	NOT USED	NOT USED			SYS. DET. S17					ST / DC ISOLATOR
FILE "J"	U	Ø 5 / 5A	Ø 6 / 6A	Ø 6 / 6C	SLOT EMPTY	SLOT EMPTY	SLOT EMPTY	SLOT EMPTY	SYS. DET. S18	SYS. DET. S19	SLOT EMPTY	SLOT EMPTY	SLOT EMPTY	SLOT EMPTY	SLOT EMPTY
	L	NOT USED	Ø 6 / 6B	NOT USED					NOT USED	SYS. DET. S20					

EX.: 1A, 2A, ETC. = LOOP NO.'S

FS = FLASH SENSE
ST = STOP TIME

INPUT FILE CONNECTION & PROGRAMMING CHART

LOOP NO.	LOOP TERMINAL	INPUT FILE POS.	PIN NO.	INPUT ASSIGNMENT NO.	DETECTOR NO.	NEMA PHASE	CALL	EXTEND	FULL TIME DELAY	STRETCH TIME	DELAY TIME
1A	TB2-1,2	I1U	56	18	1	1	Y	Y			
2A	TB2-5,6	I2U	39	1	2	2	Y	Y			
2B	TB2-7,8	I2L	43	5	12	2	Y	Y			
3A	TB2-9,10	I3U	63	25	32	3	Y	Y		1.0	5
3B	TB2-11,12	I3L	76	38	42	3	Y	Y			5
4A	TB4-1,2	I4U	47	9	22	4	Y	Y		1.0	
4B	TB4-5,6	I5U	58	20	3	4	Y	Y			15
4C	TB4-9,10	I6U	41	3	4	4	Y	Y			5
* S16	TB6-9,10	I9U	60	22	11	SYS					
* S17	TB6-11,12	I9L	62	24	13	SYS					
5A	TB3-1,2	J1U	55	17	5	5	Y	Y			
6A	TB3-5,6	J2U	40	2	6	6	Y	Y			
6B	TB3-7,8	J2L	44	6	16	6	Y	Y			
6C	TB3-9,10	J3U	64	26	36	6	Y	Y			
* S18	TB7-5,6	J8U	50	12	28	SYS					
* S19	TB7-9,10	J9U	59	21	15	SYS					
* S20	TB7-11,12	J9L	61	23	17	SYS					

* System detector only. Remove the vehicle phase assigned to this detector in the default programming.

~~ENABLE DETECTORS NO. 4 AND NO. 42 AS SWITCHING DETECTORS, AND PROGRAM THEIR 'SWITCH/DUPLICATE PHASE' AS SHOWN IN THE CHART ABOVE. THIS WILL ALLOW LOOP 3B TO EXTEND PHASE 5 DURING PHASE 5 GREEN, AND LOOP 4C TO EXTEND PHASE 1 DURING PHASE 1 GREEN. DETECTOR SWITCHING PROGRAMMING IS ACCOMPLISHED IN THE DETECTOR ASSIGNMENTS AND SETTINGS MENU:~~

~~MAIN MENU SELECTION 7 (DETECTORS), THEN 1 (VEHICLE DETECTOR ASSIGNMENTS).~~

! Disable "Switching" feature for detectors no. 4 and no. 42.

INPUT FILE POSITION LEGEND: J2L
FILE J
SLOT 2
LOWER

PHASE SEQUENCE PROGRAMMING DETAIL

(program controller as shown below)

FROM OASIS LOCAL CONTROLLER MAIN MENU
SELECT: 4 PHASE SEQUENCE

PHASE SEQUENCE: PAGE 1 NEXT: PAGES)

RNG	LEAD	BARRIER 1		X-LAG	LEAD	BARRIER 2		X-LAG
1	1	2	0	0	3	4	0	0
2	0	6	0	5	0	0	0	0
3	0	0	0	0	0	0	0	0
4	0	0	0	0	0	0	0	0

! Ensure Phase Sequence Page 1 reflects leading left not lagging left.

THIS ELECTRICAL DETAIL IS FOR
THE SIGNAL DESIGN: 03-0922
DESIGNED: January 2015
SEALED: 1-14-15
REVISED: N/A

This Electrical Detail supersedes the detail sealed on 3/22/12.

Signal Upgrade

ELECTRICAL AND PROGRAMMING DETAILS FOR:

Prepared in the Offices of:
Transportation Mobility and Safety Division
STATE OF NORTH CAROLINA DEPARTMENT OF TRANSPORTATION
Signal Management Section
750 N.Greenfield Pkwy,Garner,NC 27529

US 17 Business at NC 24-53 WB Ramp/ Highway Patrol Station

Division 3 Onslow County Jacksonville

PLAN DATE:	January 2015	REVIEWED BY:	JTR
PREPARED BY:	James Peterson	REVIEWED BY:	

REVISIONS	INIT.	DATE

SEAL
NORTH CAROLINA PROFESSIONAL SEAL 008453 ENGINEER JOHN T. ROWE, JR.
DocuSigned by: John T. Rowe, Jr. 1/21/2015
SIGNATURE DATE
SIG. INVENTORY NO. 03-0922

21-JAN-2015 07:09
S:*ITS&SU*ITS Signals*Workgroups*Sig Mgmt*Peterson*03922_sm.ele.20120322.dgn
jpeterson

METAL POLE No. 1

PROJECT REFERENCE NO.	SHEET NO.
W-5203D	Sig. 1.2

Design Loading for METAL POLE NO. 1

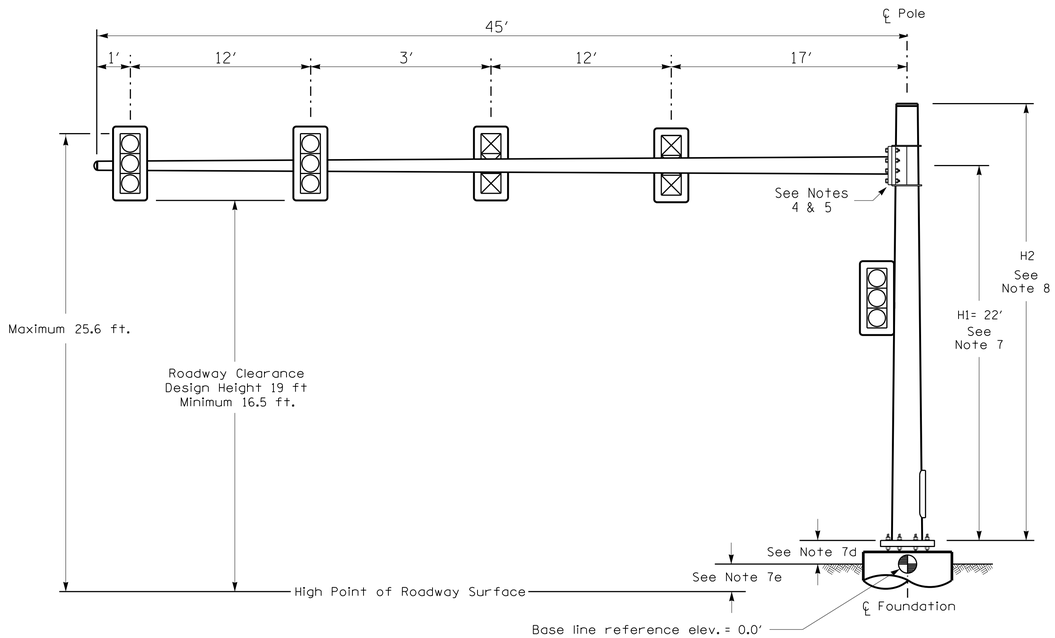

Elevation View

SPECIAL NOTE

The contractor is responsible for verifying that the mast arm attachment height (H1) will provide the "Design Height" clearance from the roadway before submitting final shop drawings for approval. Verify elevation data below which was obtained by field measurement or from available project survey data.

Elevation Data for Mast Arm Attachment (H1)

Elevation Differences for:	Pole 1	
Baseline reference point at ℄ Foundation @ ground level	0.0 ft.	
Elevation difference at High point of roadway surface	+0.9 ft.	
Elevation difference at Edge of travelway or face of curb	N/A	

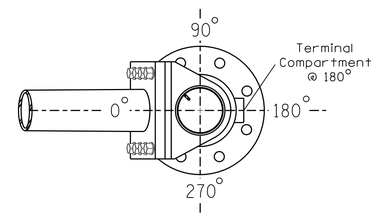

POLE RADIAL ORIENTATION

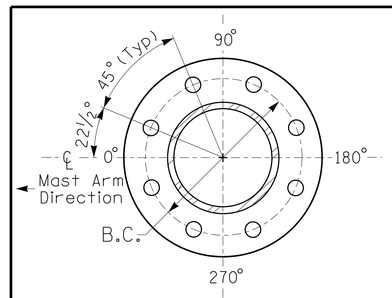

8 BOLT BASE PLATE DETAIL

See Note 6

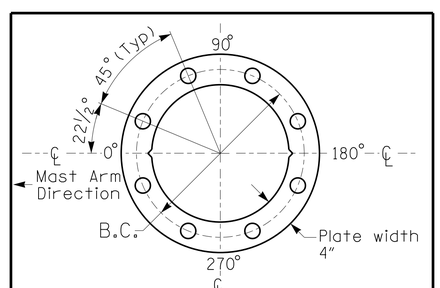

BASE PLATE TEMPLATE & ANCHOR BOLT LOCK PLATE DETAIL

For 8 Bolt Base Plate

MAST ARM LOADING SCHEDULE

LOADING SYMBOL	DESCRIPTION	AREA	SIZE	WEIGHT
	RIGID MOUNTED SIGNAL HEAD 12"-3 SECTION-WITH BACKPLATE	9.3 S.F.	25.5" W X 52.5" L	60 LBS
Street Name	STREET NAME SIGN RIGID MOUNTED	12.0 S.F.	18.0" W X 96.0" L	27 LBS

NOTES

DESIGN REFERENCE MATERIAL

1. Design the traffic signal structure and foundation in accordance with:
   - The 5th Edition 2009 AASHTO "Standard Specifications for Structural Supports for Highway Signs, Luminaires, and Traffic Signals, including all of the latest interim revisions.
   - The 2012 NCDOT "Standard Specifications for Roads and Structures." The latest addenda to the specifications can be found in the traffic signal project special provisions.
   - The 2012 NCDOT Roadway Standard Drawings.
   - The traffic signal project plans and special provisions.
   - The NCDOT "Metal Pole Standards" located at the following NCDOT website: https://connect.ncdot.gov/resources/safety/Pages/ITS-Design-Resources.aspx

DESIGN REQUIREMENTS

2. Design the traffic signal structure using the loading conditions shown in the elevation views. These are anticipated worst case "design loads" and may not represent the actual loads that will be applied at the time of the installation. The contractor should refer to the traffic signal plans for the actual loads that will be applied at the time of the installation.
3. Design all signal supports using stress ratios that do not exceed 0.9.
4. The camber design for the mast arm deflection should provide an appearance of a low pitched arch where the tip or the free end of the mast arm does not deflect below horizontal when fully loaded.
5. A clamp-type bolted mast arm-to-pole connection may be used instead of the welded ring stiffened box connection shown as long as the connection meets all of the design requirements.
6. Design base plate with 8 anchor bolt holes. Provide 2 inch x 60 inch anchor bolts.
7. The mast arm attachment height (H1) shown is based on the following design assumptions:
   a. Mast arm slope and deflection are not considered in determining the arm attachment height as they are assumed to offset each other.
   b. Signal heads are rigidly mounted and vertically centered on the mast arm.
   c. The roadway clearance height for design is as shown in the elevation views.
   d. The top of the pole base plate is 0.75 feet above the ground elevation.
   e. Refer to the Elevation Data Chart for the elevation differences between the proposed foundation ground level and the high point of the roadway.
8. The pole manufacturer will determine the total height (H2) of each pole using the greater of the following:
   - Mast arm attachment height (H1) plus 2 feet, or
   - H1 plus 1/2 of the total height of the mast arm attachment assembly plus 1 foot.
9. If pole location adjustments are required, the contractor must gain approval from the Engineer as this may affect the mast arm lengths and arm attachment heights. The contractor may contact the Signal Design Section Senior Structural Engineer for assistance at (919) 773-2800.
10. The contractor is responsible for verifying that the mast arm length shown will allow proper positioning of the signal heads over the roadway.
11. The contractor is responsible for providing soil penetration testing data (SPT) to the pole manufacturer so site specific foundations can be designed.

All metal poles and arms should be BLACK in color as specified in the project special provisions.

This Plan Supersedes Plan Sealed 3/30/2012

NCDOT Wind Zone 2 (130 mph)

Prepared in the Offices of:
Transportation Mobility and Safety Division
Signal Design Section
750 N.Greenfield Pkwy.Garner,NC 27529

US 17 Business
At
NC 24-53 WB Ramp/
Highway Patrol Station

Division 3 Onslow County Jacksonville

PLAN DATE:	January 2015	REVIEWED BY:
PREPARED BY:	JPG/IOU	REVIEWED BY:

REVISIONS	INIT.	DATE

SCALE 0 N/A N/A

SEAL
NORTH CAROLINA PROFESSIONAL SEAL 023489 ENGINEER PAMELA L. ALEXANDER

DocuSigned by: P.L. Alexander 1/21/2015
DATE
SIG. INVENTORY NO. 03-0922

21-JAN-2015 09:06
S:\TMS\SIG\TIS Signals\Signal Design Section\Eastern Region\Div-03\03-0922\03-0922 Loading diagram.dgn
jgalloway

PROJECT NO.	SHEET NO.
W-5203D	Sig. M1

STATE OF NORTH CAROLINA
DIVISION OF HIGHWAYS

STANDARD DRAWINGS FOR METAL POLES

NCDOT METAL POLE STANDARDS

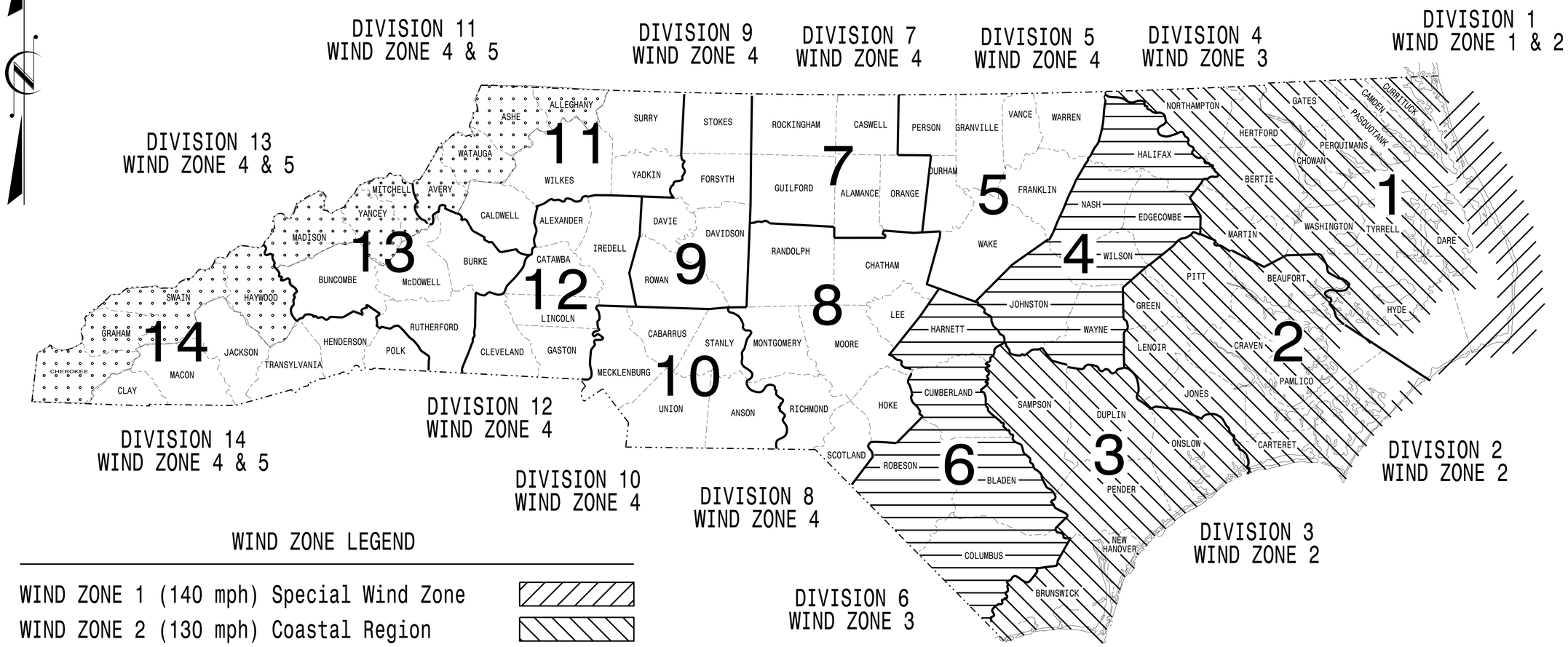

WIND ZONE LEGEND

- WIND ZONE 1 (140 mph) Special Wind Zone
- WIND ZONE 2 (130 mph) Coastal Region
- WIND ZONE 3 (110 mph) Eastern Region
- WIND ZONE 4 (90 mph) Central & Mtn. Region
- WIND ZONE 5 (120 mph) Special Wind Zone

https://connect.ncdot.gov/resources/safety/Pages/ITS-Design-Resources.aspx

Prepared in the Offices of:

Transportation Mobility and Safety Division
Signal Design Section
STATE OF NORTH CAROLINA DEPARTMENT OF TRANSPORTATION

750 N.Greenfield Pkwy.Garner,NC 27529

Designed in conformance with the latest 2012 Interim to the 5th Edition 2009

AASHTO

Standard Specifications for Structural Supports for Highway Signs, Luminares, and Traffic Signals

INDEX OF PLANS

DRAWING NUMBER	DESCRIPTION
M 1	Title Sheet
M 2	Fabrication Details – All Poles
M 3	Fabrication Details – Strain Poles
M 4,5	Fabrication Details – Mast Arm Poles
M 6	Construction Details – Strain Poles
M 7	Construction Details – Foundations
M 8,9	Standard Strain Pole Foundations

NCDOT CONTACTS:

MOBILITY AND SAFETY DIVISION – ITS AND SIGNALS UNIT

G. A. FULLER, P.E. – STATE ITS AND SIGNALS ENGINEER

G. G. MURR, JR., P.E. – STATE SIGNALS ENGINEER

D.C. SARKAR, P.E. – ITS AND SIGNALS SENIOR STRUCTURAL ENGINEER

C.F. ANDREWS – ITS AND SIGNALS JOURNEY STRUCTURAL ENGINEER

SEAL

NORTH CAROLINA PROFESSIONAL SEAL 028094 ENGINEER DEBESH C. SARKAR

DocuSigned by: Debesh C. Sarkar 44E8E32E147E4C4...

8/26/2014

DATE

PROJECT REFERENCE NO.	SHEET NO.
W-5203D	Sig. M2

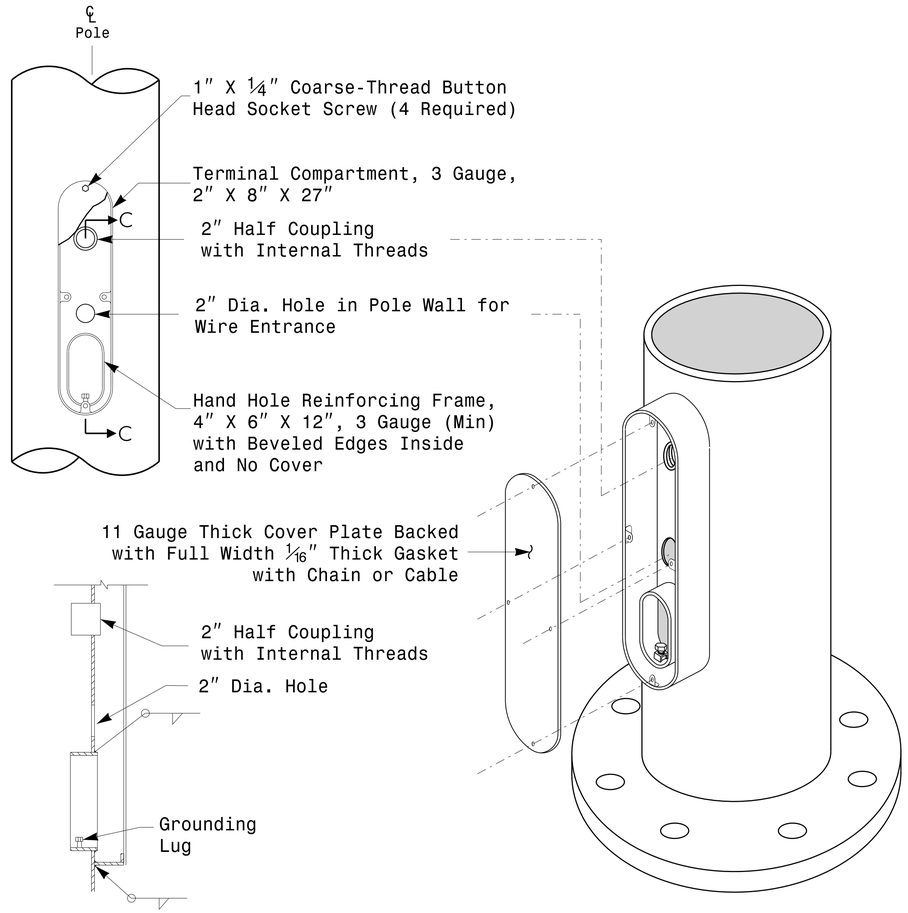

Note: Unless otherwise specified, locate Terminal Compartment 1 foot above the pole base plate at 180 degrees on the pole's radial index.

Terminal Compartment Detail

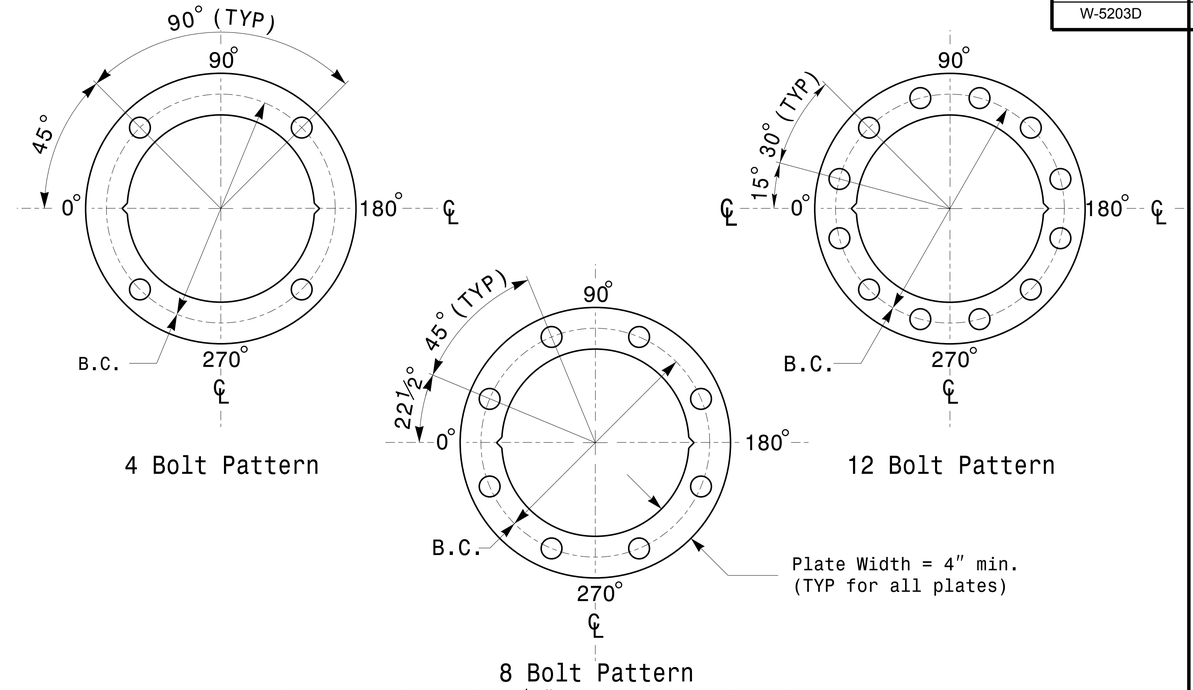

Construct Templates and Plates from ¼″ min. thick Steel. Galvanizing is not required.

Base Plate Template and Anchor Bolt Lock Plate Details

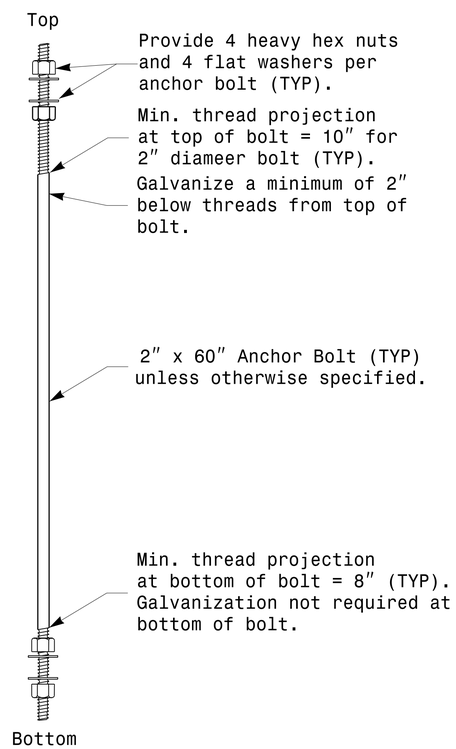

Anchor Bolt Detail

Note: See Strain Pole drawing M3 and Mast arm drawing M4 for base plate weld details.

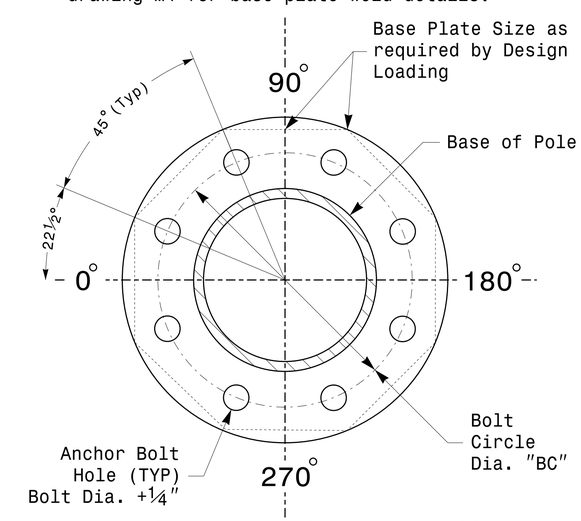

8 Bolt Base Plate Detail

MFG _____ MFG. DATE: MM/YY
SHAFT D/T/L/Y ----/----/----/----
ARM-A D/T/L/Y ----/----/----/----
----/----/----/----
ARM-B D/T/L/Y ----/----/----/----
----/----/----/----
A.B. DIA./B.C./L/Y ----/----/----/----
NCDOT STANDARD ----------

Shaft I.D. Tag
(Provide on Strain Poles and Mast Arm Poles)

MFG _____ MFG. DATE: MM/YY
SECTION D/T/L/Y ----/----/----/----
NCDOT STANDARD ----------

Arm I.D. Tag
(Provide on each section of a multi-section mast arm)

Notes:
1) D= Diameter, T= Thickness, L= Length, Y= Yield Strength
2) A.B. = Anchor Bolt
3) B.C. = Bolt Circle of Anchor Bolts
4) If Custom Design, use "NCDOT STANDARD" line for pole I.D. number and Signal Inv. Number.
5) See drawing M4 for mounting positions of I.D. tags.

Identification Tag Details

Fabrication Details – All Poles

Prepared in the Offices of:
Transportation Mobility and Safety Division
Signal Design Section
750 N.Greenfield Pkwy,Garner,NC 27529

Typical Fabrication Details
Common To
All Metal Poles

PLAN DATE:	AUGUST 2013	DESIGNED BY:	C.F. ANDREWS
PREPARED BY:	N. BITTING	REVIEWED BY:	D.C. SARKAR

SCALE 0 NA NONE

REVISIONS	INIT.	DATE

SEAL
NORTH CAROLINA PROFESSIONAL SEAL 028094 ENGINEER DEBESH C. SARKAR

DocuSigned by: Debesh C. Sarkar 44EBE32E147E4C4... 8/26/2014
DATE
SIG. INVENTORY NO.

26-AUG-2014 08:55
S:\TITLES\DMITS\Signals\Signal Design Section\Eastern Region\M Sheets\2012_M2_Fab Details All Poles.dgn
jgalloway

PROJECT REFERENCE NO.	SHEET NO.
W-5203D	Sig. M3

Fabrication Details – Strain Poles

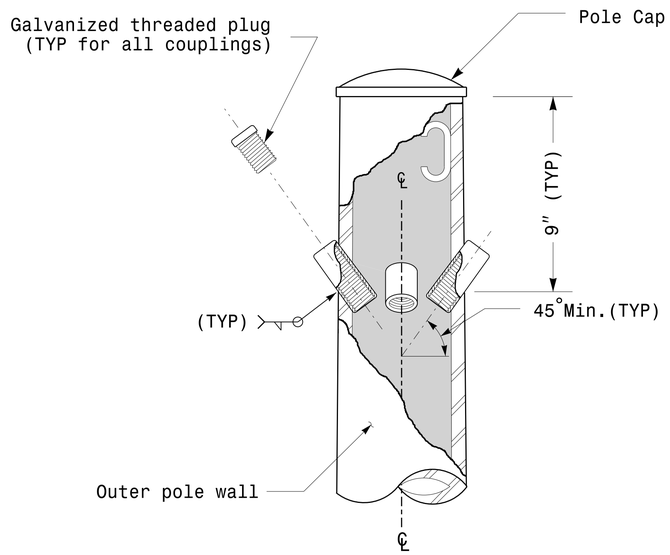

Cable Entrances at Top of Pole

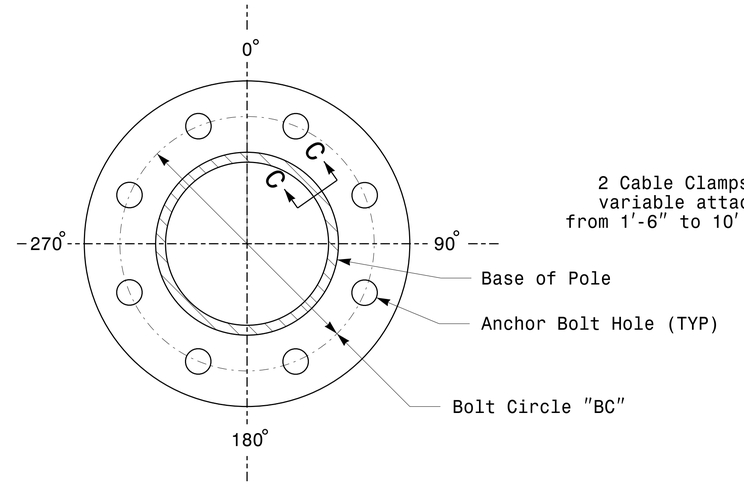

Section B-B

(See drawing M2)

Pole Base Plate

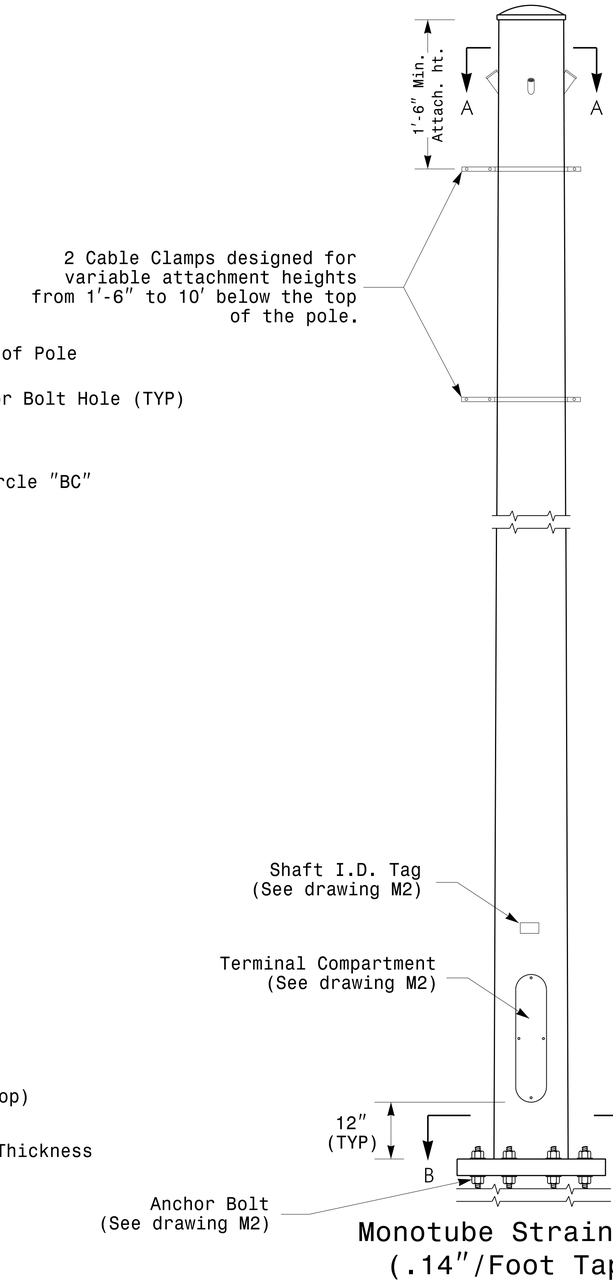

Monotube Strain Pole
(.14″/Foot Taper)

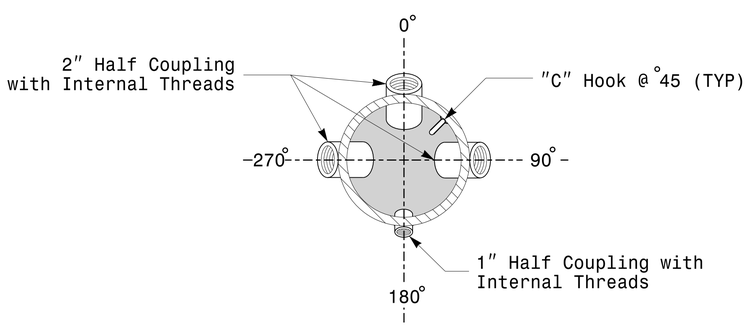

Section A-A

Radial Orientation for Factory Installed Accessories at Top of Pole

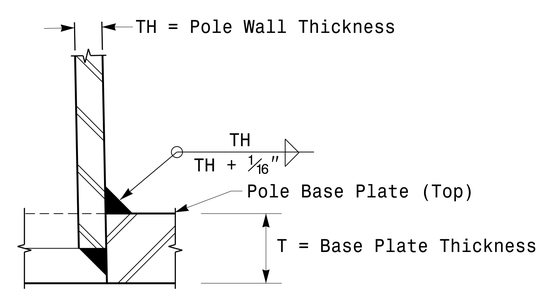

Section C-C

Socket Connection Weld Detail

Prepared in the Offices of:
Transportation Mobility and Safety Division
Signal Design Section
750 N.Greenfield Pkwy.Garner,NC 27529

Typical Fabrication Details
For Strain Poles

PLAN DATE:	AUGUST 2013	DESIGNED BY:	C.F. ANDREWS
PREPARED BY:	N. BITTING	REVIEWED BY:	D.C. SARKAR

SCALE 0 NA NONE

REVISIONS	INIT.	DATE

SEAL
NORTH CAROLINA PROFESSIONAL SEAL 028094 ENGINEER DEBESH C. SARKAR

DocuSigned by: Debesh C. Sarkar 44E8E32E147E4C4... 8/26/2014
DATE

SIG. INVENTORY NO.

26-AUG-2014 08:51
S:\TSG\ITS\Signals\Signal Design Section\Eastern Region\M Sheets\2012.M3.Fab Details Strain Poles.dgn
jgallaway

PROJECT REFERENCE NO.	SHEET NO.
W-5203D	Sig. M4

Fabrication Details – Mast Arm Poles

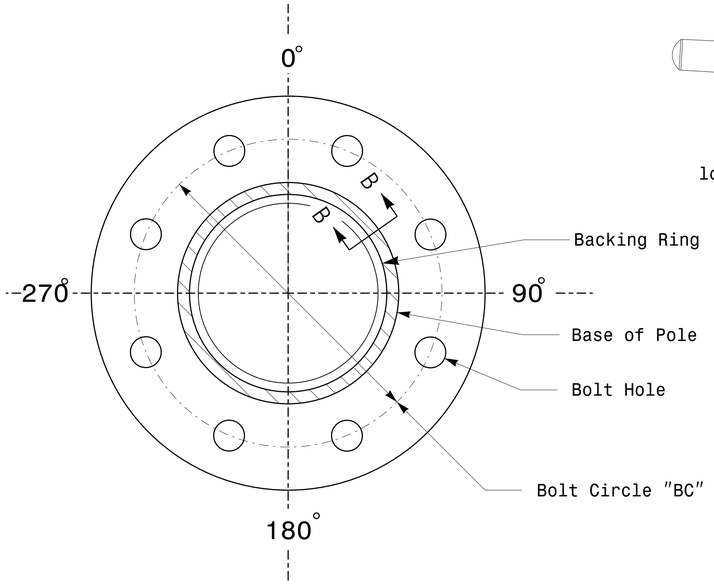

Section A-A

(See drawing M 2)

Pole Base Plate

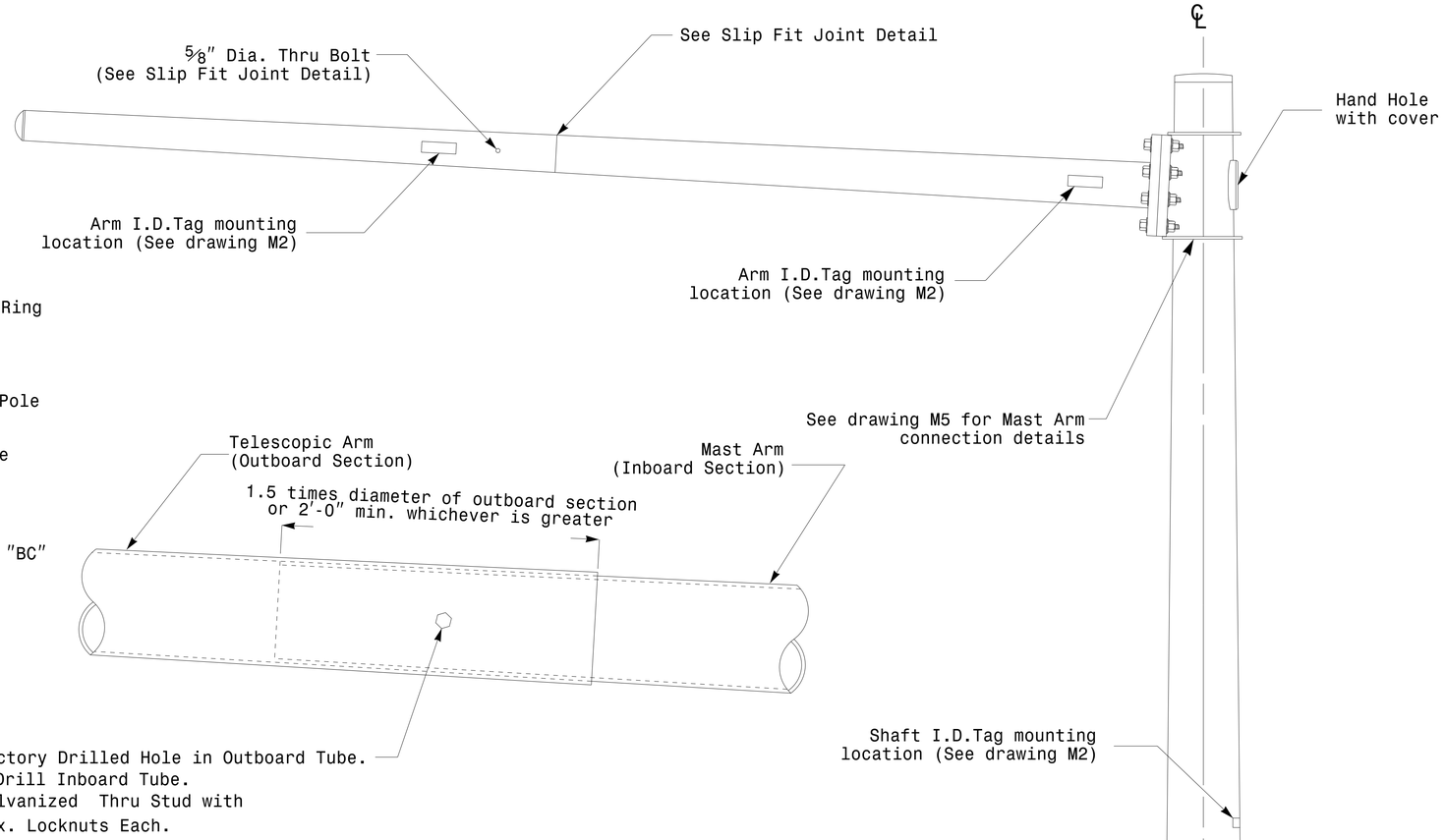

Slip Fit Joint Detail for Mast Arm

Monotube Mast Arm Pole
(.14in./ft. taper)

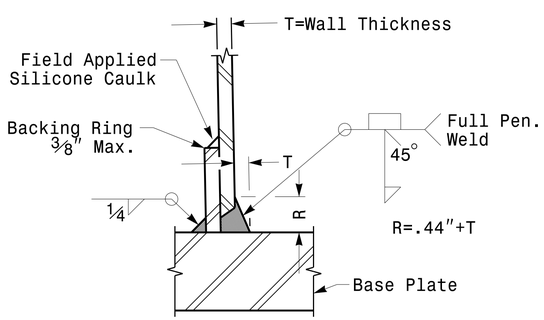

Section B-B

(Pole Attachment to Base Plate)

Full-Penetration Groove Weld Detail

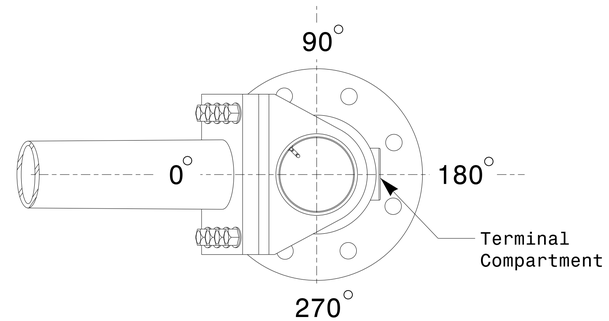

Mast Arm Radial Orientation

Prepared in the Offices of:
Transportation Mobility and Safety Division
Signal Design Section
750 N.Greenfield Pkwy.Garner,NC 27529

Typical Fabrication Details
for Mast Arm Poles

PLAN DATE:	AUGUST 2013	DESIGNED BY:	C.F. ANDREWS
PREPARED BY:	N. BITTING	REVIEWED BY:	D.C. SARKAR

SCALE 0 NA NONE

REVISIONS	INIT.	DATE

SEAL
NORTH CAROLINA PROFESSIONAL SEAL 028094 ENGINEER DEBESH C. SARKAR

DocuSigned by: Debesh C. Sarkar 44EBE3E147E4C4... 8/26/2014
DATE

SIG. INVENTORY NO.

26-AUG-2014 08:50
S:\TSGSUM\TS Signals\Signal Design Section\Eastern Region\M Sheets\2012_M4_Fab Details Mastarms.dgn
jgallaway

PROJECT REFERENCE NO.	SHEET NO.
W-5203D	Sig. M5

Welded Ring Stiffened Mast Arm Connection

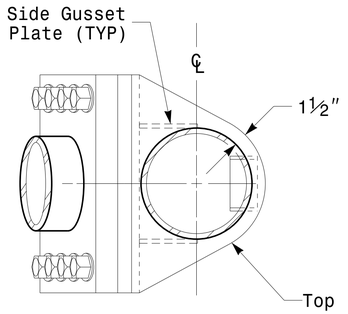

Plan View

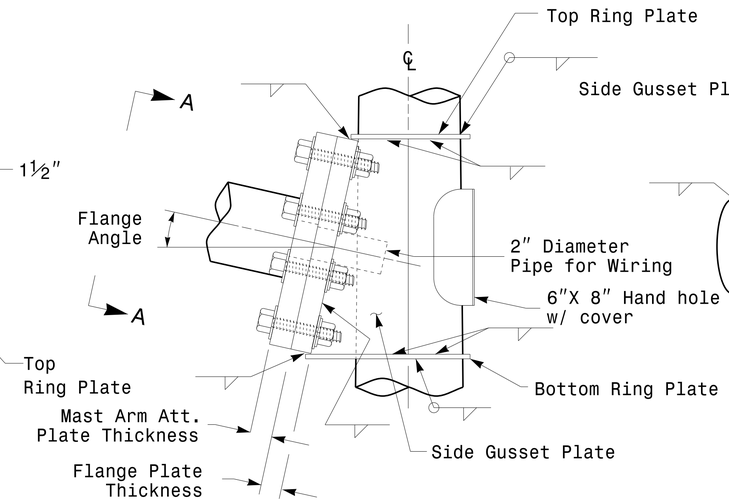

Side Elevation View

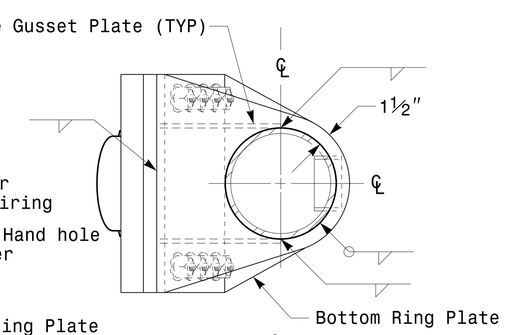

Bottom View

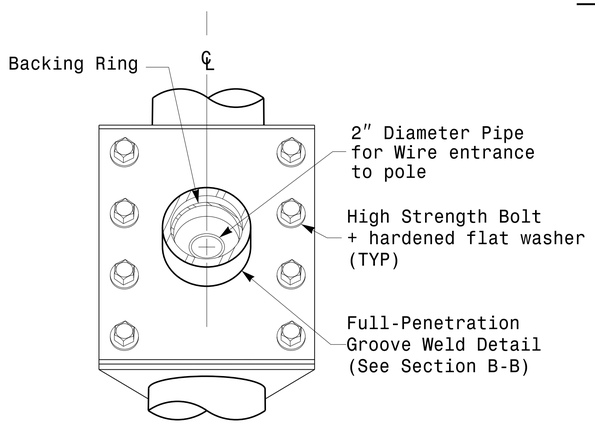

Front Elevation View

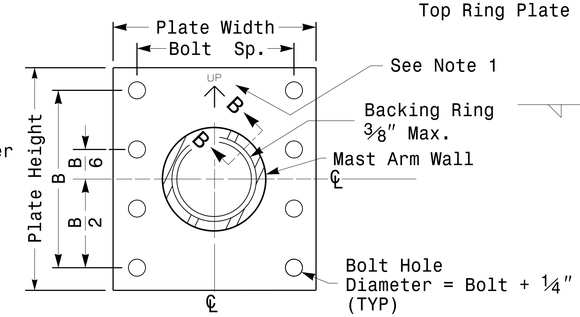

Section View A-A

Mast Arm Attachment Plate

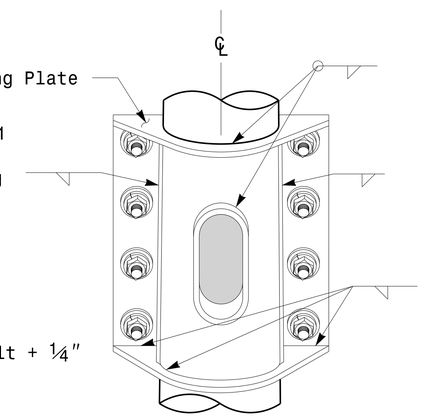

Back Elevation View

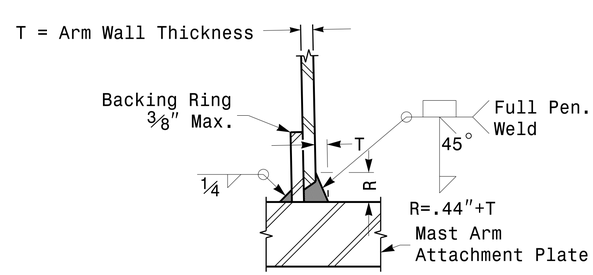

Section B-B

Full-Penetration Groove Weld Detail

Notes:

1. Provide a permanent means of identification above the mast arm to indicate proper attachment orientation of the mast arm.
2. Designer will determine the size of all structural components, plates, fasteners, and welds shown unless they are already specified.
3. Designer is responsible for providing appropriate drainage points.

Prepared in the Offices of:
Transportation Mobility and Safety Division
Signal Design Section
750 N.Greenfield Pkwy,Garner,NC 27529

Fabrication Details For Mast Arm Connection To Pole

PLAN DATE:	AUGUST 2013	DESIGNED BY:	C.F. ANDREWS
PREPARED BY:	N. BITTING	REVIEWED BY:	D.C. SARKAR

SCALE: 0 NA — NONE

REVISIONS | INIT. | DATE

SEAL: NORTH CAROLINA PROFESSIONAL SEAL 028094 ENGINEER DEBESH C. SARKAR

DocuSigned by: Debesh C. Sarkar 44EBE3E147E4C4... 8/26/2014 DATE

SIG. INVENTORY NO.

Fabrication Details – Mast Arm Poles

26-AUG-2014 08:47
S:\TSG\Traffic Signals\Signal Design Section\Eastern Region\MU Sheets\2012_MS_Fab Details Mastarms.dgn
jgalloway

PROJECT REFERENCE NO.	SHEET NO.
W-5203D	Sig. M6

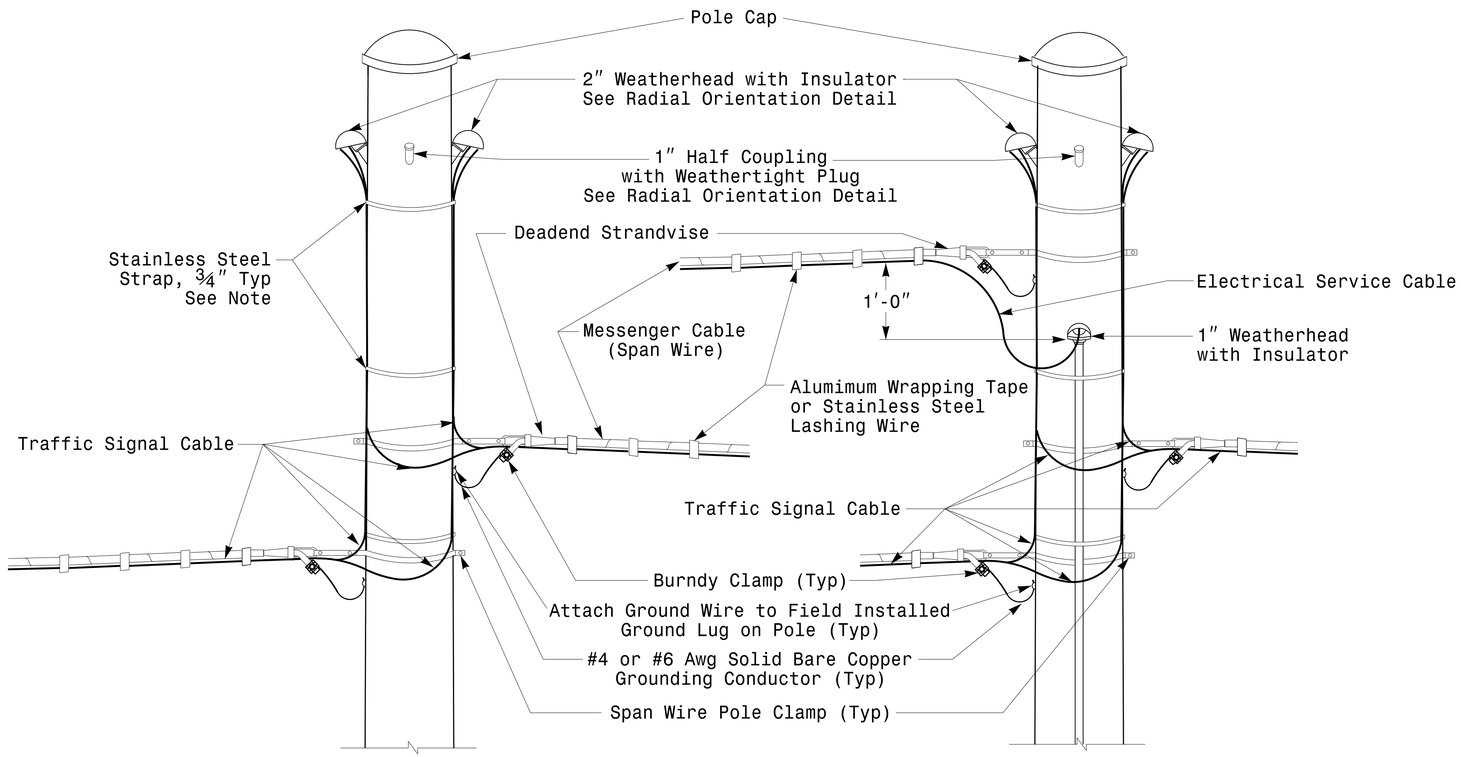

Strain Pole Attachments

Note: Strap all signal cables to the side of the pole with 3/4″ stainless steel straps when the distance between the spanwire attachment clamp and the weatherheads exceeds 36″

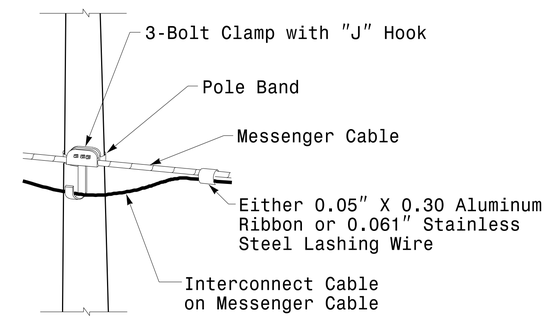

Attachment of Cable to Intermediate Metal Pole

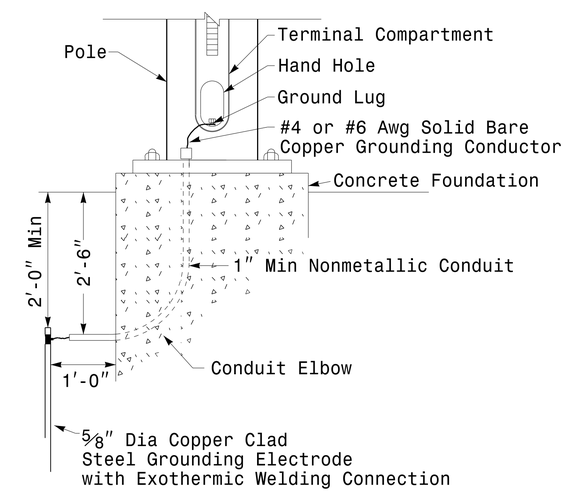

Metal Pole Grounding Detail

Construction Details – Strain Poles

Prepared in the Offices of:
Transportation Mobility and Safety Division
Signal Design Section
750 N.Greenfield Pkwy.Garner,NC 27529

Construction Details
Strain Poles

PLAN DATE:	AUGUST 2013	REVIEWED BY:	C.F. ANDREWS
PREPARED BY:	N. BITTING	REVIEWED BY:	D.C. SARKAR

SCALE 0 NA NONE

REVISIONS	INIT.	DATE

SEAL
NORTH CAROLINA PROFESSIONAL SEAL 028094 ENGINEER DEBESH C. SARKAR

DocuSigned by: Debesh C. Sarkar 8/26/2014
44E8E82E147E4C4...
DATE

SIG. INVENTORY NO.

26-AUG-2014 08:45
S:\Traffic\Signals\Signal Design Section\Eastern Region\M Sheets\2012_MS_Con Details Strain Poles.dgn
jgalloway

PROJECT REFERENCE NO.	SHEET NO.
W-5203D	Sig. M7

Construction Details – Foundations

Reinforcing Steel Bars

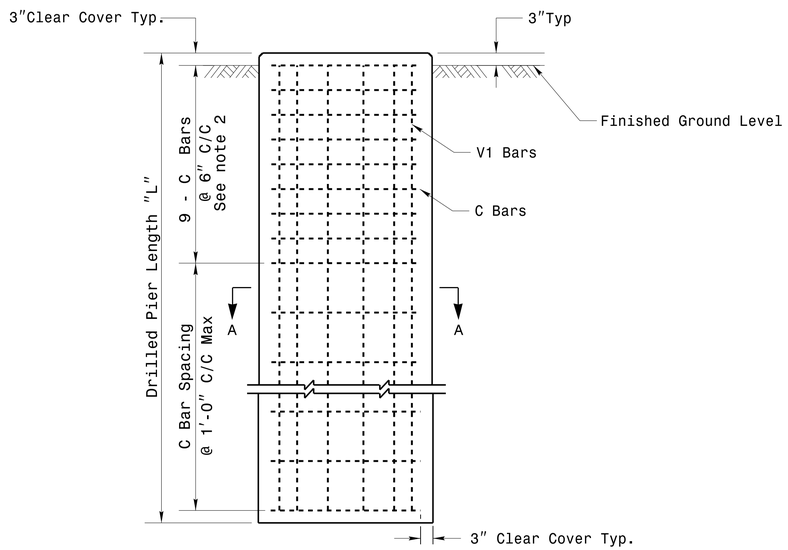

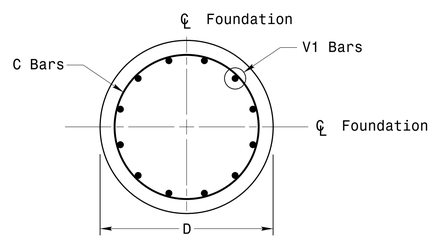

Section A-A

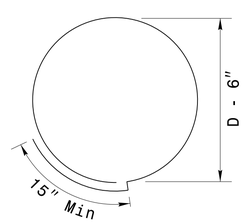

Typical "C" Bars

REINFORCING STEEL TABLE FOR STANDARD DRILL PIER SHAFT (4'–0" DIAMETER)						
Shaft Dia (in.)	Conc. Volume (cu. yds.)	Bar Name	MIN.	Size	Type	Length
48"	.465 x L	V1	***	#8	STR.	**
		C	*	#4	CIR.	12'-6"

* See Note No. 1
** See Note No. 3
*** See Note No. 4

Typical Foundation Anchor Bolt Details

(Reinforcing Cage Not Shown for Clarity)

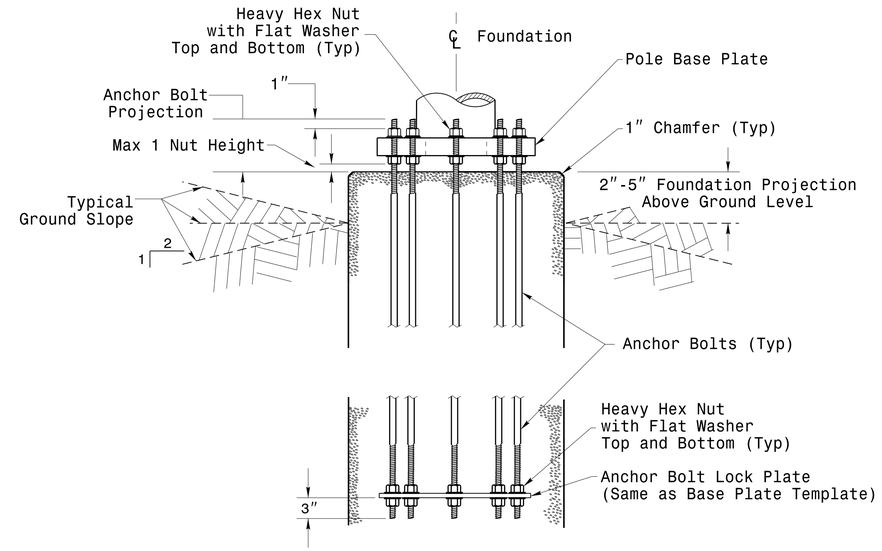

Typical Foundation Conduit Details

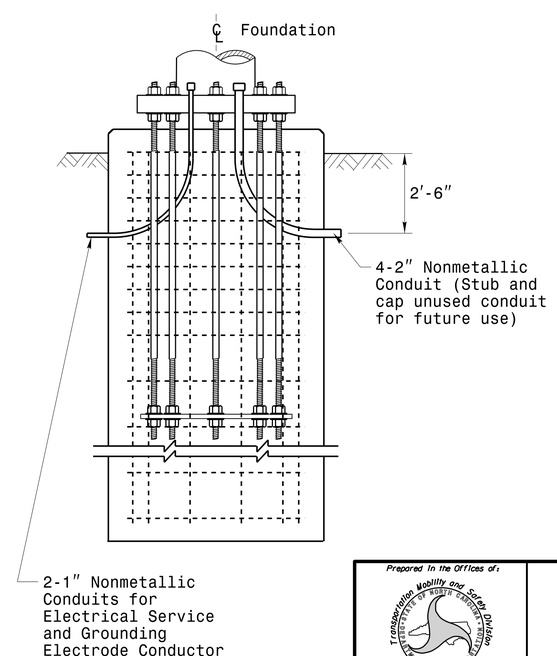

Notes

1. The number of C-bars is based on foundation depth and/or as required. For standard foundations, see sheets M 8 and M 9 for details.
2. Circular tie reinforcing rings may be vertically adjusted by +/- 3" at a depth between 2'-0" and 3'-0" to facilitate the installation of electrical conduit entering in the cage.
3. The length of V1-bars is based on foundation depth. For standard foundations, see sheets M 8 and M 9 for details. Vertical reinforcing bars (V1) may be horizontally adjusted by +/-3"to facilitate the installation of electrical conduit entering into the cage.
4. Provide vertical reinforcement as required per design. See sheets M 8 and M9 for details.

Prepared in the Offices of:
Transportation Mobility and Safety Division
STATE OF NORTH CAROLINA DEPARTMENT OF TRANSPORTATION
Signal Design Section
750 N.Greenfield Pkwy,Garner,NC 27529

SCALE
0 NA
NONE

Construction Details
Foundations

PLAN DATE:	AUGUST 2013	DESIGNED BY:	K.C. DURIGON
PREPARED BY:	N. BITTING	REVIEWED BY:	D.C. SARKAR

REVISIONS	INIT.	DATE

SEAL
NORTH CAROLINA PROFESSIONAL SEAL 028094 ENGINEER DEBESH C. SARKAR

DocuSigned by: Debesh C. Sarkar 44EBE3E147E4C4... 8/26/2014
DATE

SIG. INVENTORY NO.

DS-AUG-2014 08:44
S:\TIS\SIG\M\TS\Signals\Signal Design Section\Eastern Region\MM Sheets\2012_M7_Con Details Foundations.dgn
jgallaway

SATURATED SOIL CONDITION

PROJECT REFERENCE NO.	SHEET NO.
W-5203D	Sig. M8

		STANDARD STRAIN POLES						STANDARD FOUNDATIONS 48" Diameter Drilled Pier Length (L) – Feet							Reinforcement			
					Reactions at the Pole Base			Clay				Sand			Longitudinal		Stirrups	
		Case No.	Pole Height (Ft.)	Base Plate BC (In.)	Axial (kip)	Shear (kip)	Moment (ft–kip)	Medium N–Value 4–8	Stiff N–Value 9–15	Very Stiff N–Value 16–30	Hard N–Value >30	Loose N–Value 4–10	Medium N–Value 11–30	Dense N–Value >30	Bar Size (#)	Quantity	Bar Size (#)	Spacing (in.)
WIND ZONE 1	LIGHT	S26L3	26	25	2	11	270	19	13	9	8	17	14.5	12.5	8	13	4	12
		S30L3	30	25	2	11	300	20	13.5	9	8	17.5	15	13	8	14	4	12
		S35L3	35	25	3	11	320	20	13.5	9.5	8	17.5	15	13	8	15	4	12
	HEAVY	S30H3	30	29	3	16	450	24.5	17	13	11	21	17.5	15	8	18	4	12
		S35H3	35	29	4	16	515	26	17.5	12	8.5	22	18.5	16	8	20	4	12
WIND ZONE 2	LIGHT	S26L2	26	23	2	10	245	18	12.5	8.5	8	16.5	14	12	8	13	4	12
		S30L2	30	23	2	10	270	19	12.5	9	8	16.5	14	12.5	8	13	4	12
		S35L2	35	23	3	10	300	19.5	13	9	8	17	14.5	13	8	14	4	12
	HEAVY	S30H2	30	29	3	15	415	25.5	15.5	11	8	20	17	14.5	8	17	4	12
		S35H2	35	29	4	15	475	25	16.5	11.5	8	21	17.5	15.5	8	19	4	12
WIND ZONE 3	LIGHT	S26L2	26	23	2	10	245	18	12.5	8.5	8	16.5	14	12	8	13	4	12
		S30L2	30	23	2	10	270	19	12.5	9	8	16.5	14	12.5	8	13	4	12
		S35L2	35	23	3	10	300	19.5	13	9	8	17	14.5	13	8	14	4	12
	HEAVY	S30H2	30	29	3	15	415	25.5	15.5	11	8	20	17	14.5	8	17	4	12
		S35H2	35	29	4	15	475	25	16.5	11.5	8	21	17.5	15.5	8	19	4	12
WIND ZONE 4	LIGHT	S26L1	26	22	2	8	190	16	11	8	8	15	12.5	11	8	12	4	12
		S30L1	30	22	2	8	205	16.5	11.5	8	8	15	13	11.5	8	12	4	12
		S35L1	35	22	3	8	230	17	12	8	8	15.5	13.5	11.5	8	12	4	12
	HEAVY	S30H1	30	25	3	12	320	20.5	14	9.5	8	18	15	13.5	8	15	4	12
		S35H1	35	25	4	12	350	21	14.5	10	8	18.5	15.5	13.5	8	16	4	12
WIND ZONE 5	LIGHT	S26L2	26	23	2	10	245	18	12.5	8.5	8	16.5	14	12	8	13	4	12
		S30L2	30	23	2	10	270	19	12.5	9	8	16.5	14	12.5	8	13	4	12
		S35L2	35	23	3	10	300	19.5	13	9	8	17	14.5	13	8	14	4	12
	HEAVY	S30H2	30	29	3	15	415	25.5	15.5	11	8	20	17	14.5	8	17	4	12
		S35H2	35	29	4	15	475	25	16.5	11.5	8	21	17.5	15.5	8	19	4	12

48" Dia. Foundations Concrete Volume (cubic yards) = (0.465) x Foundation Depth

Fabrication Design Notes:

1. Values shown in the "Reactions at the Pole Base" column represent the minimum acceptable capacity allowed for design using a design CSR of 1.00.
2. Min. base plate thickness (T) is 2.0 inches.

Foundation Selection:

1. Perform a standard penetration test at each proposed foundation site to determine "N" value.
2. Select the appropriate wind zone from M 1 drawing.
3. Select the soil type (Clay or Sand) that best describes the soil characteristics.
4. Get the appropriate standard pole case number from the plans or from the Engineer.
5. Select the appropriate column in the chart based on soil type and "N" value. Select the appropriate row based on the pole load case.
   The foundation depth is the value where the column and the row intersect.
6. Reference Drilled Shafts: Construction Procedures and Design Methods, FHWA -IF-99-025

S30H1 - Hard Clay-Stirrup Spacing: 6 in. c/c
S30H2 - Hard Clay-Stirrup Spacing: 6 in. c/c
S30H3 - Hard Clay-Stirrup Spacing: 6 in. c/c
- Dense Sand-Stirrup Spacing: 6 in. c/c
S35H1 - Hard Clay - Stirrup Spacing: 6 in. c/c
S35H2 - Very Stiff Clay-Stirrup Spacing: 6 in. c/c
- Hard Clay- Stirrup Spacing: 6 in. c/c
- Dense Sand- Stirrup Spacing: 6 in. c/c
S35H3 - Very Stiff Clay-Stirrup Spacing: 6 in. c/c
- Dense Sand-Stirrup Spacing: 6 in. c/c

Standard Strain Pole Foundation–Saturated Soil Condition

Prepared in the Offices of:
Transportation Mobility and Safety Division
STATE OF NORTH CAROLINA DEPARTMENT OF TRANSPORTATION
Signal Design Section
750 N.Greenfield Pkwy,Garner,NC 27529

Standard Strain Pole Foundation for Saturated Soil Condition

PLAN DATE: SEPTEMBER 2013	DESIGNED BY: C.B COGDELL
PREPARED BY: N. BITTING	REVIEWED BY: D. SARKAR

SCALE 0 NA None

REVISIONS | INIT. | DATE

SEAL
NORTH CAROLINA PROFESSIONAL SEAL 028094 ENGINEER DEBESH C. SARKAR

DocuSigned by: Debesh C. Sarkar 8/26/2014
44E8E32E147E4C4...
DATE

25-AUG-2014 08:49
S:\TMS\SIG\M15 Signals\Signal Design Section\Eastern Region\M Sheets\2012_M8_Standard Foundations West.dgn
jgalloway

DRY SOIL CONDITION

PROJECT REFERENCE NO.	SHEET NO.
W-5203D	Sig. M9

		STANDARD STRAIN POLES						STANDARD FOUNDATIONS 48″ Diameter Drilled Pier Length (L) – Feet							Reinforcement			
					Reactions at the Pole Base			Clay				Sand			Longitudinal		Stirrups	
		Case No.	Pole Height (Ft.)	Base Plate BC (In.)	Axial (kip)	Shear (kip)	Moment (ft-kip)	Medium N-Value 4-8	Stiff N-Value 9-15	Very Stiff N-Value 16-30	Hard N-Value >30	Loose N-Value 4-10	Medium N-Value 11-30	Dense N-Value >30	Bar Size (#)	Quantity	Bar Size (#)	Spacing (in.)
WIND ZONE 1	LIGHT	S26L3	26	25	2	11	270	18	12.5	9	8	14.5	11	10	8	13	4	12
		S30L3	30	25	2	11	300	18.5	13	9	8	15	11.5	10	8	14	4	12
		S35L3	35	25	3	11	320	19	13.5	9.5	8	15	11.5	10.5	8	15	4	12
	HEAVY	S30H3	30	29	3	16	450	23	16	11	8	17.5	13.5	11.5	8	18	4	12
		S35H3	35	29	4	16	515	24.5	16.5	12	8.5	18.5	14	12	8	20	4	12
WIND ZONE 2	LIGHT	S26L2	26	23	2	10	245	17	12	8.5	8	14	11	9.5	8	13	4	12
		S30L2	30	23	2	10	270	18	12.5	8.5	8	14.5	11	10	8	13	4	12
		S35L2	35	23	3	10	300	18.5	13	9	8	14.5	11.5	10	8	14	4	12
	HEAVY	S30H2	30	29	3	15	415	22	15	10.5	8	17	13	11.5	8	17	4	12
		S35H2	35	29	4	15	475	23.5	16	11.5	8	18	13.5	12	8	19	4	12
WIND ZONE 3	LIGHT	S26L2	26	23	2	10	245	17	12	8.5	8	14	11	9.5	8	13	4	12
		S30L2	30	23	2	10	270	18	12.5	8.5	8	14.5	11	10	8	13	4	12
		S35L2	35	23	3	10	300	18.5	13	9	8	14.5	11.5	10	8	14	4	12
	HEAVY	S30H2	30	29	3	15	415	22	15	10.5	8	17	13	11.5	8	17	4	12
		S35H2	35	29	4	15	475	23.5	16	11.5	8	18	13.5	12	8	19	4	12
WIND ZONE 4	LIGHT	S26L1	26	22	2	8	190	15.5	10.5	8	8	13	10	9	8	12	4	12
		S30L1	30	22	2	8	205	15.5	11	8	8	13	10	9	8	12	4	12
		S35L1	35	22	3	8	230	16.5	11.5	8	8	13.5	10.5	9	8	12	4	12
	HEAVY	S30H1	30	25	3	12	320	19.5	13.5	9.5	8	15	12	10.5	8	15	4	12
		S35H1	35	25	4	12	350	20	14	10	8	15.5	12	10.5	8	15	4	12
WIND ZONE 5	LIGHT	S26L2	26	23	2	10	245	17	12	8.5	8	14	11	9.5	8	13	4	12
		S30L2	30	23	2	10	270	18	12.5	8.5	8	14.5	11	10	8	13	4	12
		S35L2	35	23	3	10	300	18.5	13	9	8	14.5	11.5	10	8	14	4	12
	HEAVY	S30H2	30	29	3	15	415	22	15	10.5	8	17	13	11.5	8	17	4	12
		S35H2	35	29	4	15	475	23.5	16	11.5	8	18	13.5	12	8	19	4	12

48″ Dia. Foundations Concrete Volume (cubic yards) = (0.465) x Foundation Depth

Fabrication Design Notes:

1. Values shown in the "Reactions at the Pole Base" column represent the minimum acceptable capacity allowed for design using a design CSR of 1.00.
2. Min. base plate thickness (T) is 2.0 inches.

Foundation Selection:

1. Perform a standard penetration test at each proposed foundation site to determine "N" value.
2. Select the appropriate wind zone from M 1 drawing.
3. Select the soil type (Clay or Sand) that best describes the soil characteristics.
4. Get the appropriate standard pole case number from the plans or from the Engineer.
5. Select the appropriate column in the chart based on soil type and "N" value. Select the appropriate row based on the pole load case.
   The foundation depth is the value where the column and the row intersect.
6. Reference Drilled Shafts: Construction Procedures and Design Methods, FHWA -IF-99-025

S30H1 - Hard Clay-Stirrup Spacing: 6 in. c/c
- Dense Sand-Stirrup Spacing: 6 in. c/c

S30H2 - Very Stiff Clay: Stirrup Spacing: 6 in. c/c
- Hard Clay: Stirrup Spacing: 6 in. c/c
- Medium Clay: Stirrup Spacing: 6 in. c/c
- Dense Sand: Stirrup Spacing: 6 in. c/c

S30H3 - Very Stiff Clay: Stirrup Spacing: 6 in. c/c
- Hard Clay: Stirrup Spacing: 6 in. c/c
- Medium Clay: Stirrup Spacing: 6 in. c/c
- Dense Sand: Stirrup Spacing: 6 in. c/c

S35H1 - Hard Clay: tirrup Spacing: 6 in. c/c
- Dense Sand: Stirrup Spacing: 6 in. c/c

S35H2 - Very Stiff Clay: Stirrup Spacing: 6 in. c/c
- Hard Clay: Stirrup Spacing: 6 in. c/c
- Medium Clay: Stirrup Spacing: 6 in. c/c
- Dense Sand: Stirrup Spacing: 6 in. c/c

S35H3 - Very Stiff Clay: Stirrup Spacing: 6 in. c/c
- Hard Clay: Stirrup Spacing: 6 in. c/c
- Medium Clay: Stirrup Spacing: 6 in. c/c
- Dense Sand: Stirrup Spacing: 6 in. c/c

Standard Strain Pole Foundation–Dry Soil Condition

Prepared in the Offices of:
Transportation Mobility and Safety Division
STATE OF NORTH CAROLINA DEPARTMENT OF TRANSPORTATION
Signal Design Section
750 N.Greenfield Pkwy.Garner,NC 27529

Standard Strain Pole Foundation for Dry Soil Condition

PLAN DATE: SEPTEMBER 2013	DESIGNED BY: C.B COGDELL
PREPARED BY: N. BITTING	REVIEWED BY: D. SARKAR

SCALE: 0 NA None

REVISIONS	INIT.	DATE

SEAL
NORTH CAROLINA PROFESSIONAL SEAL 028094 ENGINEER DEBESH C. SARKAR

DocuSigned by: Debesh C. Sarkar 8/26/2014
44E8E32E147E4C4...
DATE

25-AUG-2014 08:38
S:\TIMS\M415\Signals\Signal Design Section\Eastern Region\M Sheets\2012_M9_Standard Foundations Dry.dgn
jgalloway

PROJ. REFERENCE NO.	SHEET NO.
W-5203D	X-1A

STATE OF NORTH CAROLINA
DIVISION OF HIGHWAYS

NOTE: EMBANKMENT COLUMN INCLUDES BACKFILL FOR UNDERCUT

CROSS-SECTION SUMMARY

Station L	Uncl. Exc. (cu. yd.)	Embt (cu. yd.)
10+50.00	0	0
11+00.00	13	0
11+50.00	18	4
12+00.00	19	15
12+50.00	17	33
13+00.00	11	97
13+50.00	10	219
14+00.00	13	308
14+50.00	9	327
15+00.00	6	307
15+50.00	6	281
16+00.00	6	283
16+50.00	6	266
17+00.00	6	185
17+50.00	13	88
18+00.00	28	49
18+50.00	32	90
19+00.00	35	110
19+50.00	44	83
20+00.00	46	61
20+50.00	46	48
21+00.00	47	42
21+50.00	43	34
22+00.00	43	23
22+50.00	50	13
23+00.00	55	6
23+50.00	44	2
24+00.00	28	2
24+50.00	20	3
25+00.00	13	2
25+50.00	13	5

0 2.5 5	PROJ. REFERENCE NO.	SHEET NO.
	W-5203D	X-1

NOTE: APPROXIMATE QUANTITIES ONLY. CLEARING & GRUBBING, UNCLASSIFIED EXCAVATION, REMOVAL OF EXISTING ASPHALT PAVEMENT AND CONCRETE ISLAND REMOVAL WILL BE PAID FOR AT THE LUMP SUM FOR "GRADING."

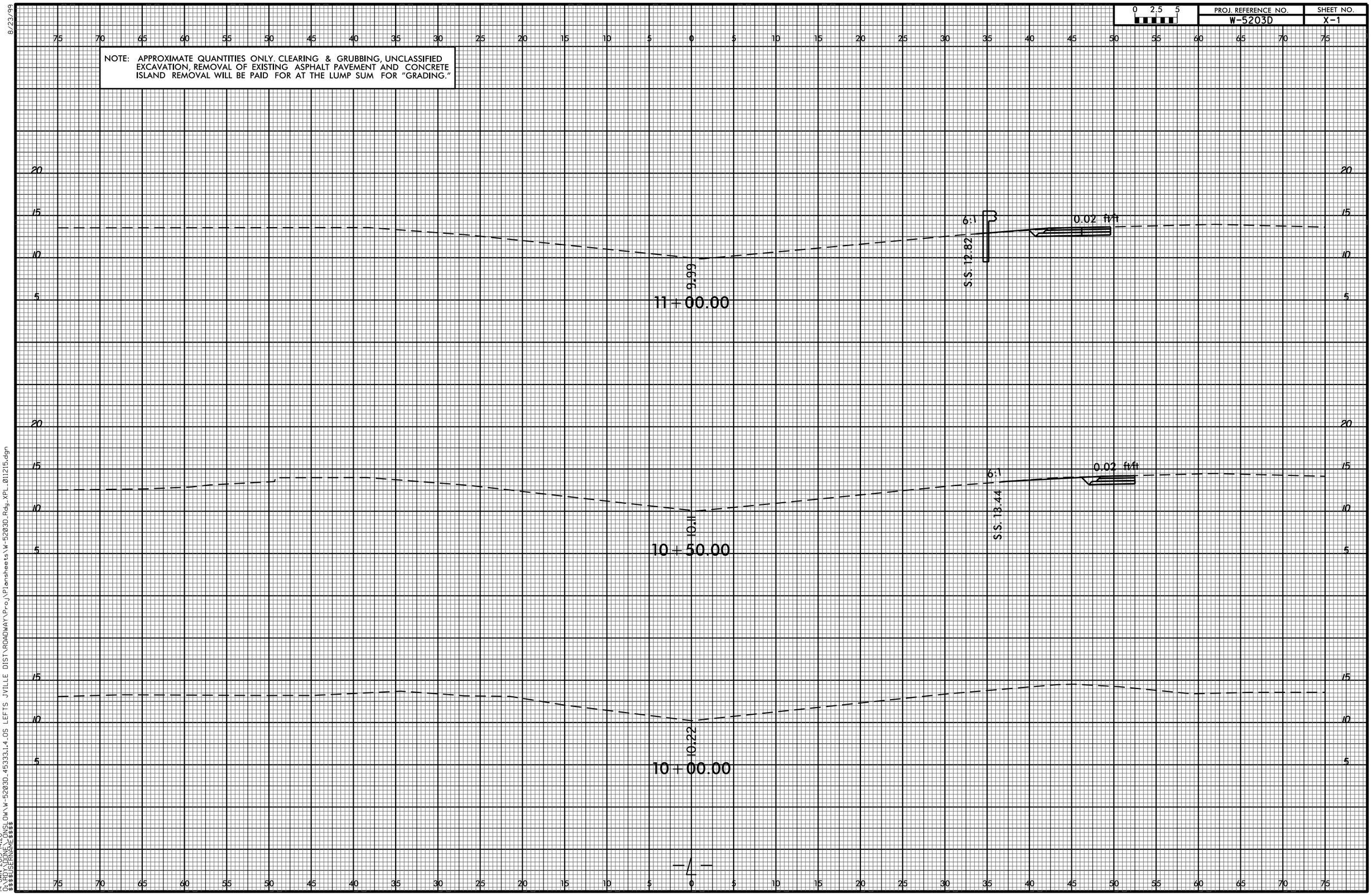

8/23/99
14-JAN-2015 14:20
Q:\RDY_DONE\ONSLOW\W-5203D_45333_t_4_OS LEFTS JVILLE DIST\ROADWAY\Proj\Plansheets\W-5203D_Rdy_XPL_011215.dgn
$$$$USERNAME$$$$

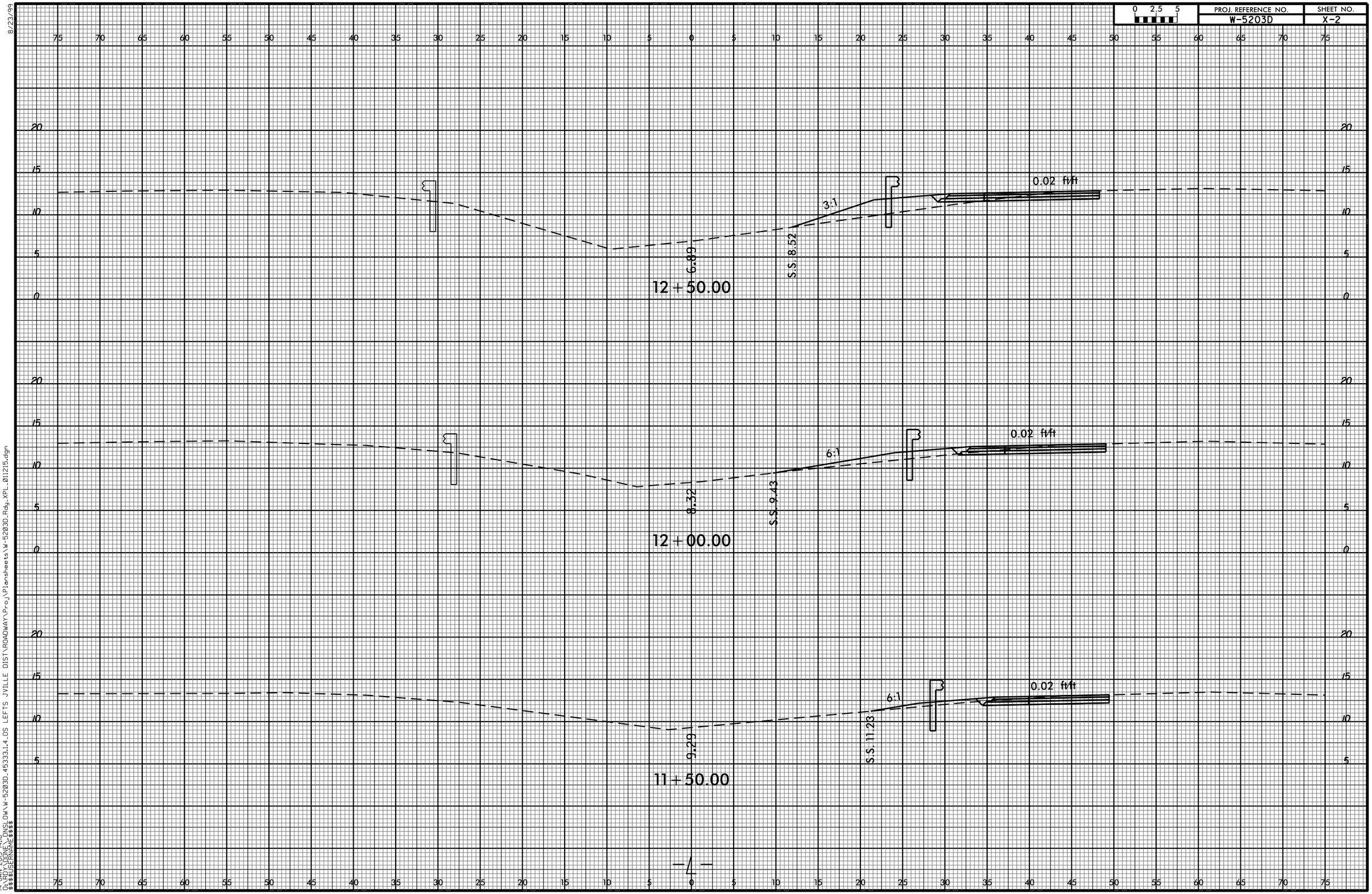

8/23/99
14-JAN-2015 14:18
Q:\RDY_DONE\ONSLOW\W-5203D_45333_1_4_OS LEFTS JVILLE DIST\ROADWAY\Proj\Plansheets\W-5203D_Rdy_XPL_011215.dgn
$$$$USERNAME$$$$

0 2.5 5	PROJ. REFERENCE NO.	SHEET NO.
	W-5203D	X-3

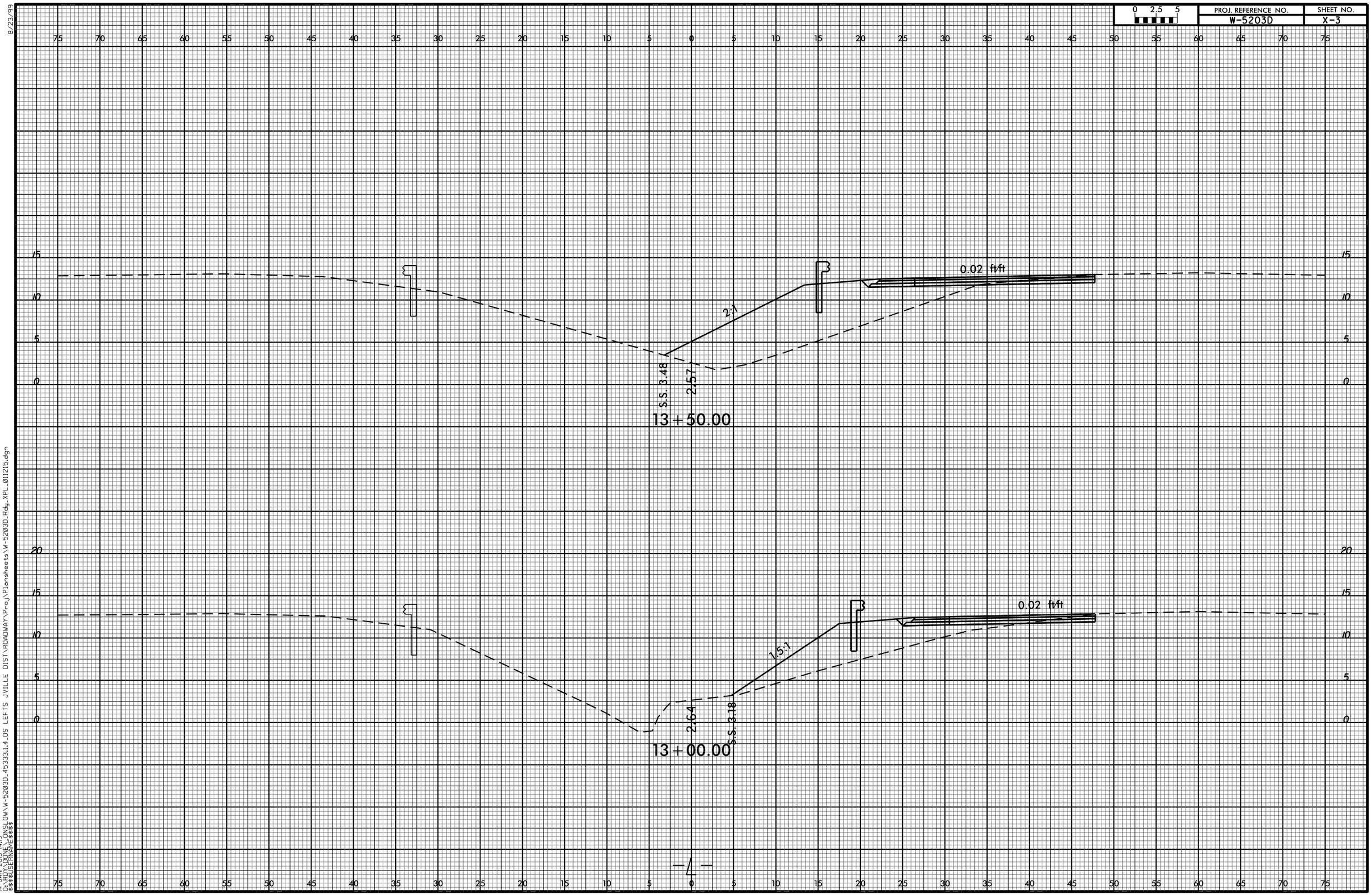

8/23/99

14-JAN-2015 14:19
O:\RDY_DONE\ONSLOW\W-5203D_45333_1.4_OS LEFTS JVILLE DIST\ROADWAY\Proj\Plansheets\W-5203D_Rdy_XPL_011215.dgn
$$$$USERNAME$$$$

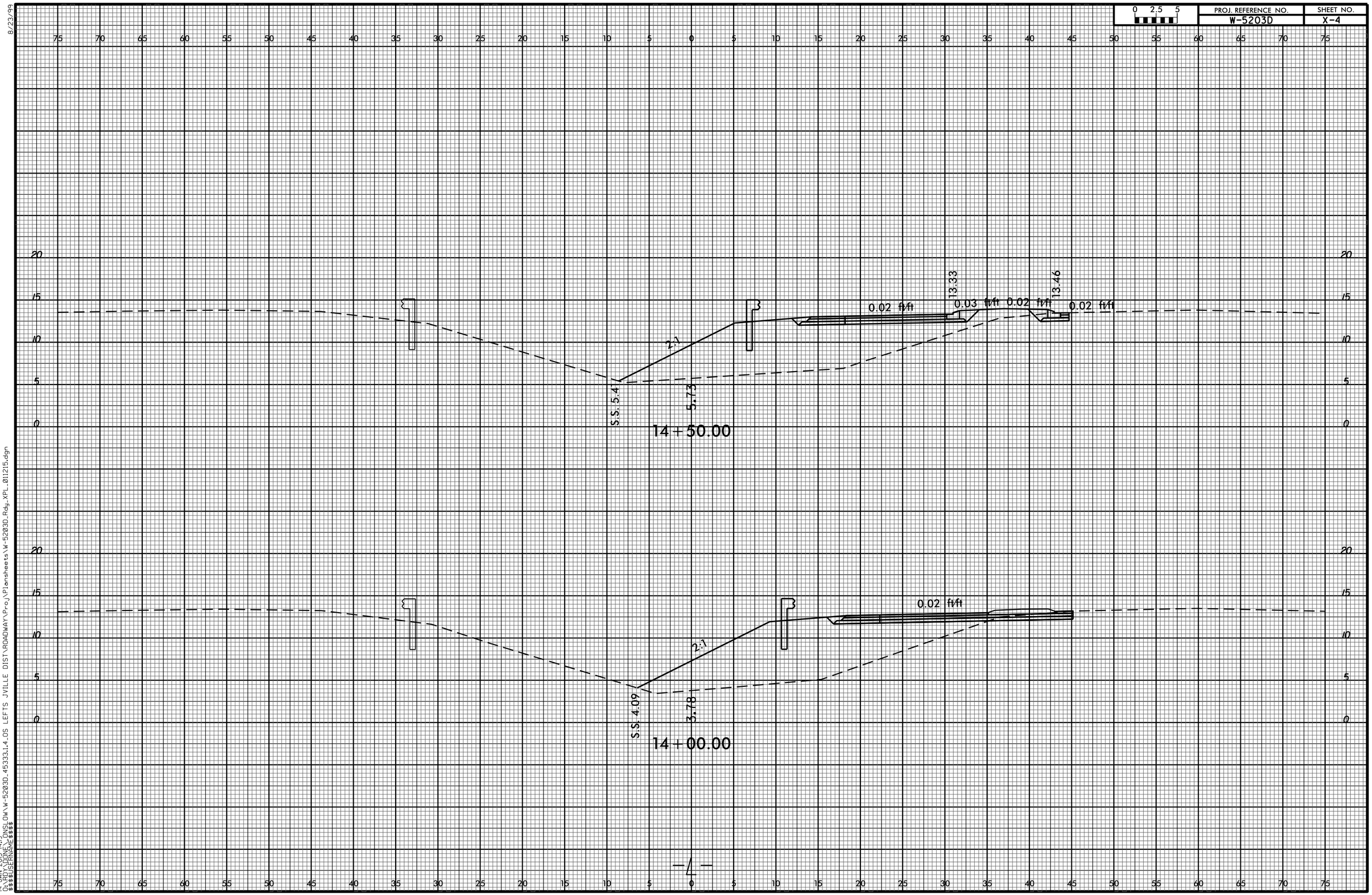

8/23/99

14-JAN-2015 14:19
O:\RDY_DONE_ONSLOW\W-5203D_45333_1_4_OS LEFTS JVILLE DIST\ROADWAY\Proj\Plansheets\W-5203D_Rdy_XPL_011215.dgn
$$$$USERNAME$$$$

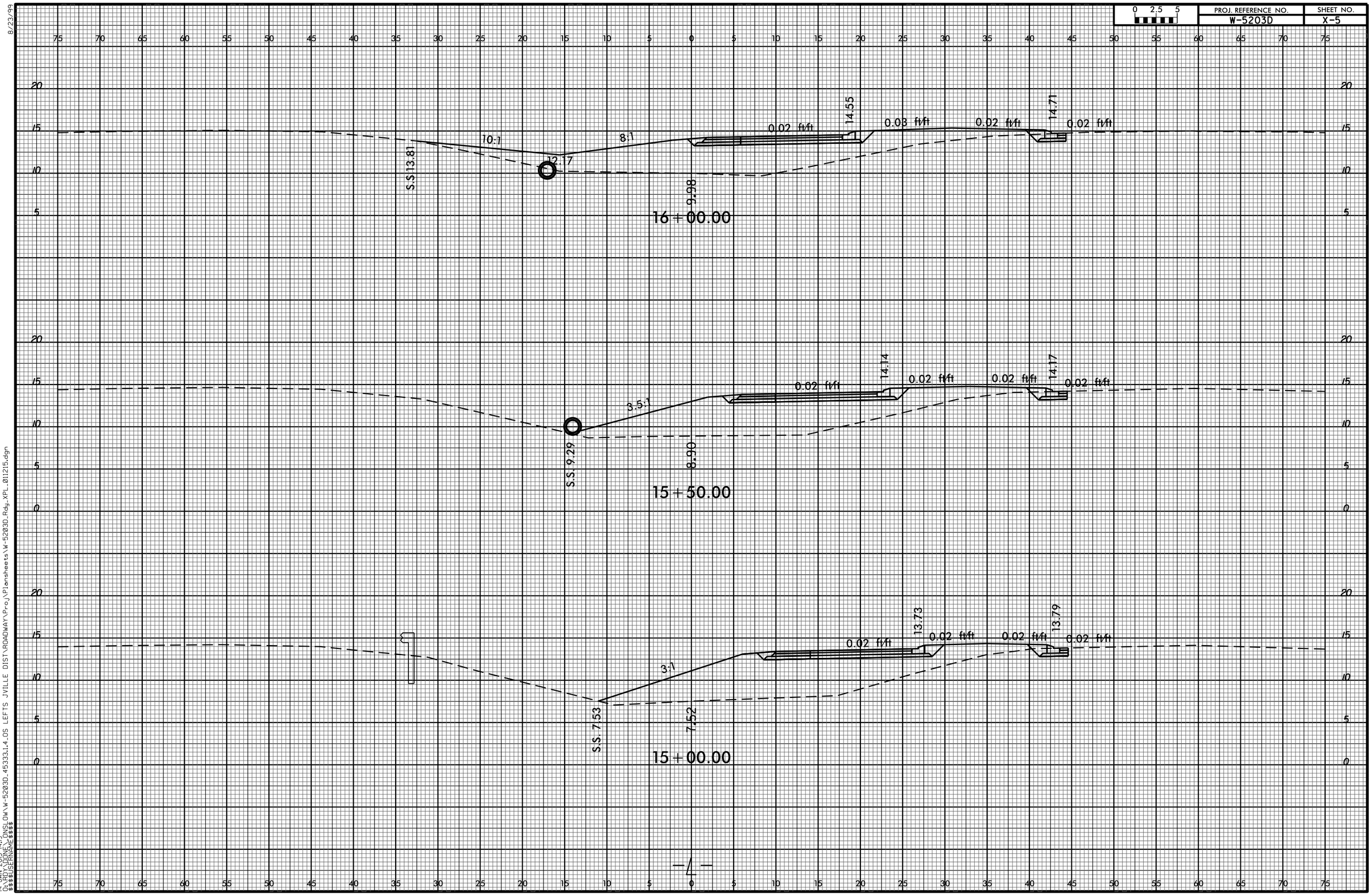

8/23/99

14-JAN-2015 14:19
O:\RDY_DONE_ONSLOW\W-5203D_45333_1.4_OS LEFTS JVILLE DIST\ROADWAY\Proj\Plansheets\W-5203D_Rdy_XPL_011215.dgn
$$$$USERNAME$$$$

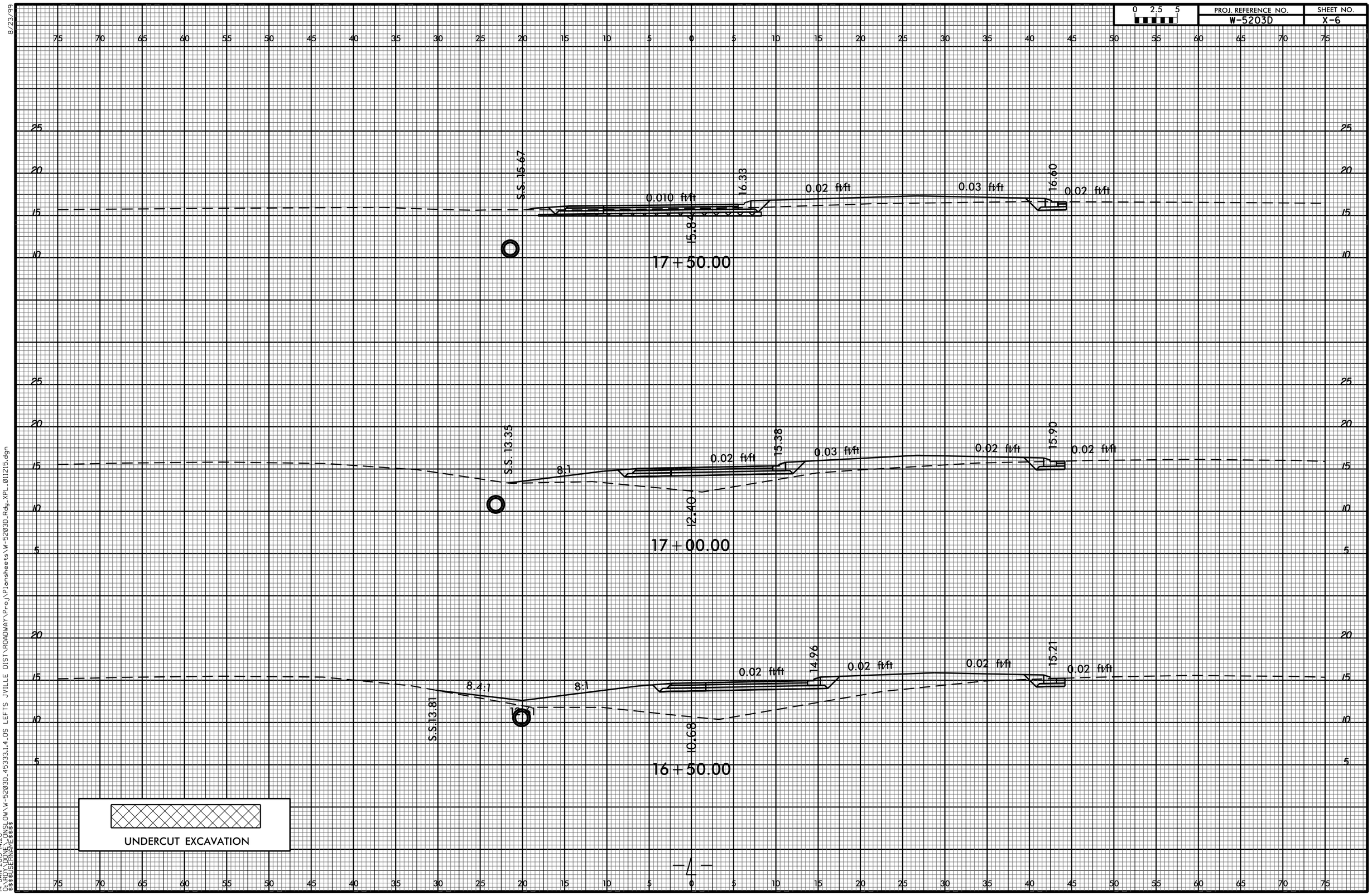

8/23/99

14-JAN-2015 14:20
O:\RDY_DONE\ONSLOW\W-5203D_45333_1.4_OS LEFTS JVILLE DIST\ROADWAY\Proj\Plansheets\W-5203D_Rdy_XPL_011215.dgn
$$$$USERNAME$$$$

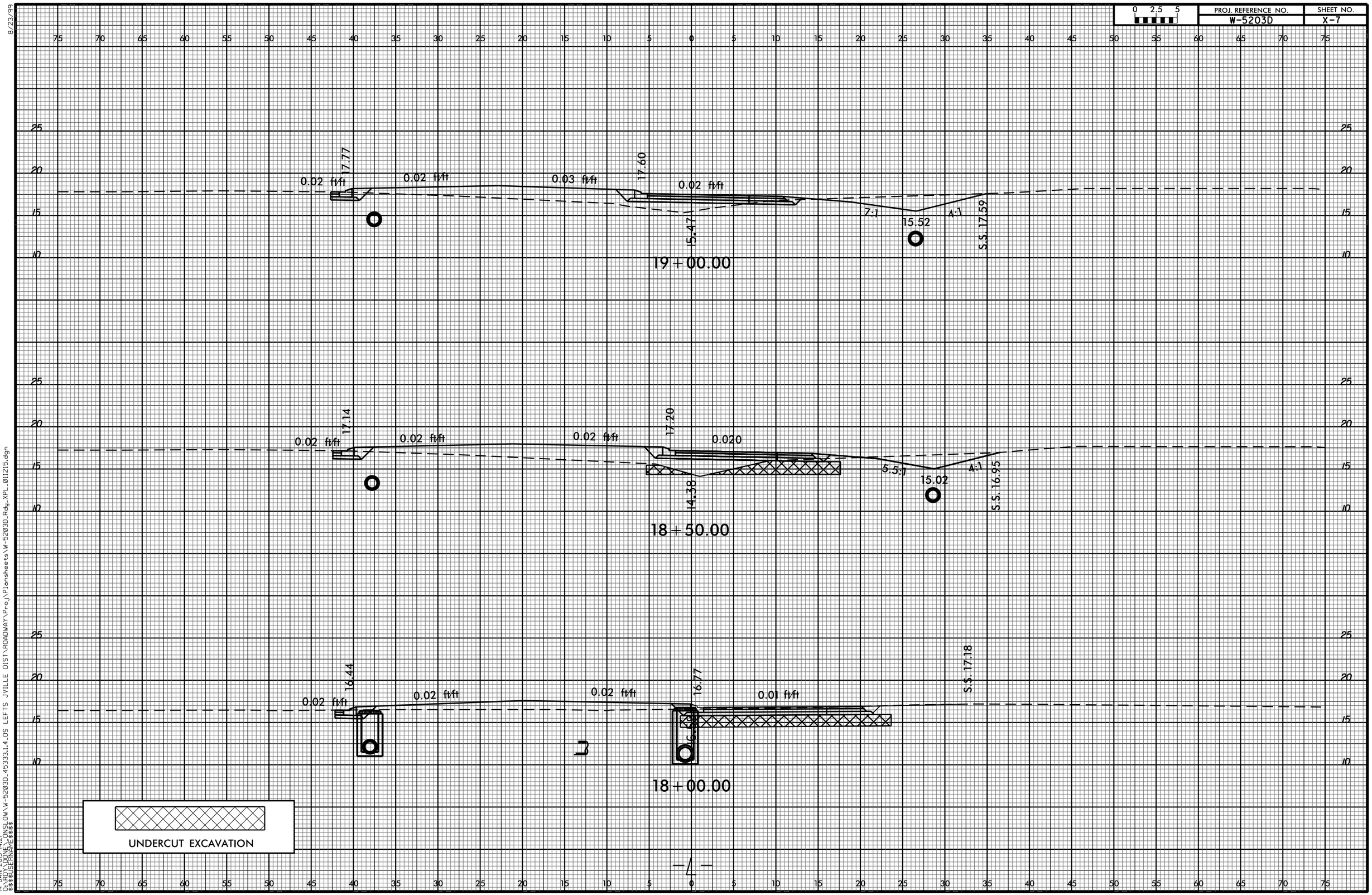

8/23/99

14-JAN-2015 14:21
O:\RDY_DONE\ONSLOW\W-5203D_45333_1.4_OS LEFTS JVILLE DIST\ROADWAY\Proj\Plansheets\W-5203D_Rdy_XPL_011215.dgn
$$$$USERNAME$$$$

0 2.5 5	PROJ. REFERENCE NO.	SHEET NO.
	W-5203D	X-8

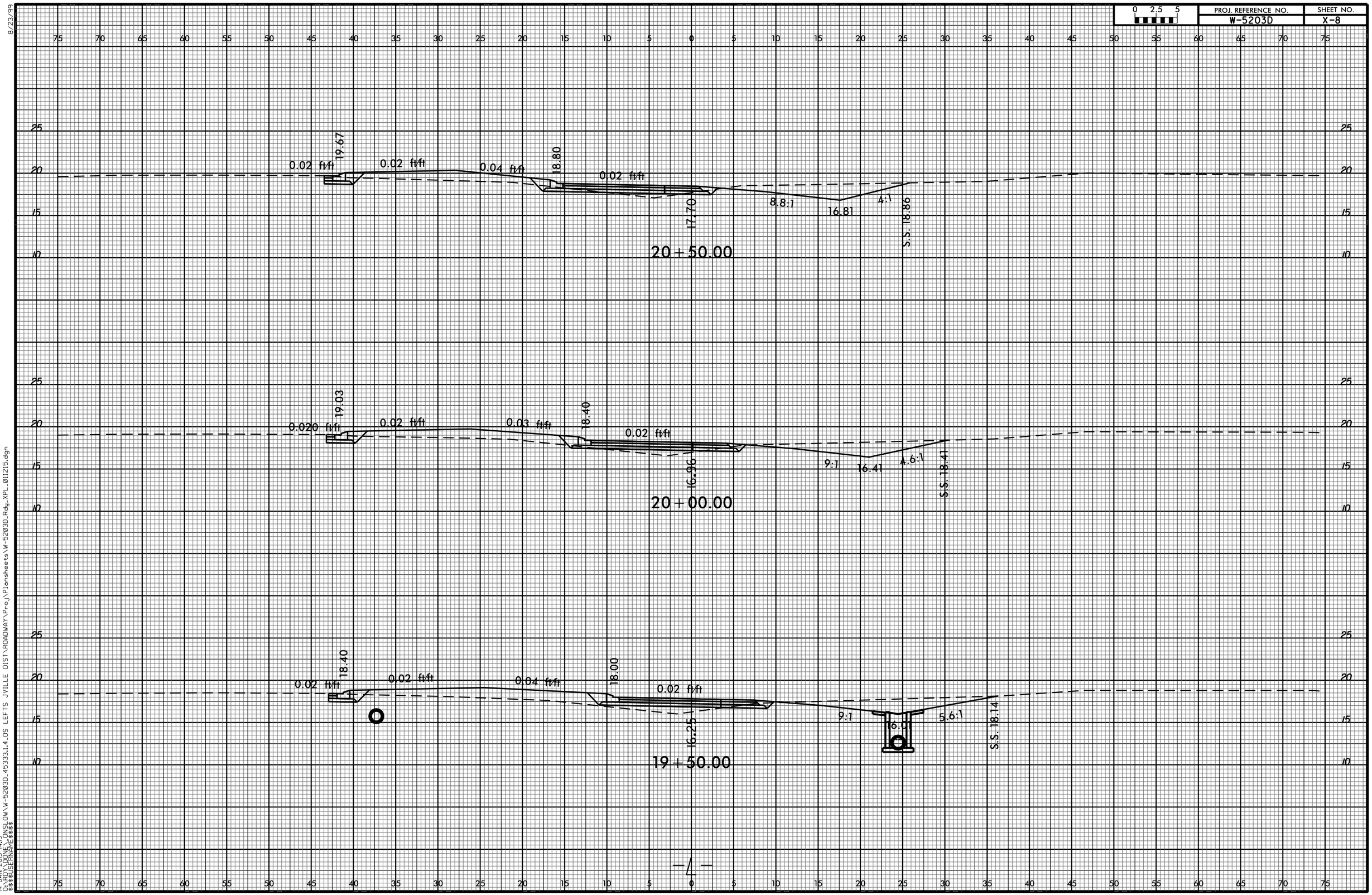

8/23/99

14-JAN-2015 14:19
O:\RDY_DONE_ONSLOW\W-5203D_45333_1.4_OS LEFTS JVILLE DIST\ROADWAY\Proj\Plansheets\W-5203D_Rdy_XPL_011215.dgn
$$$$USERNAME$$$$

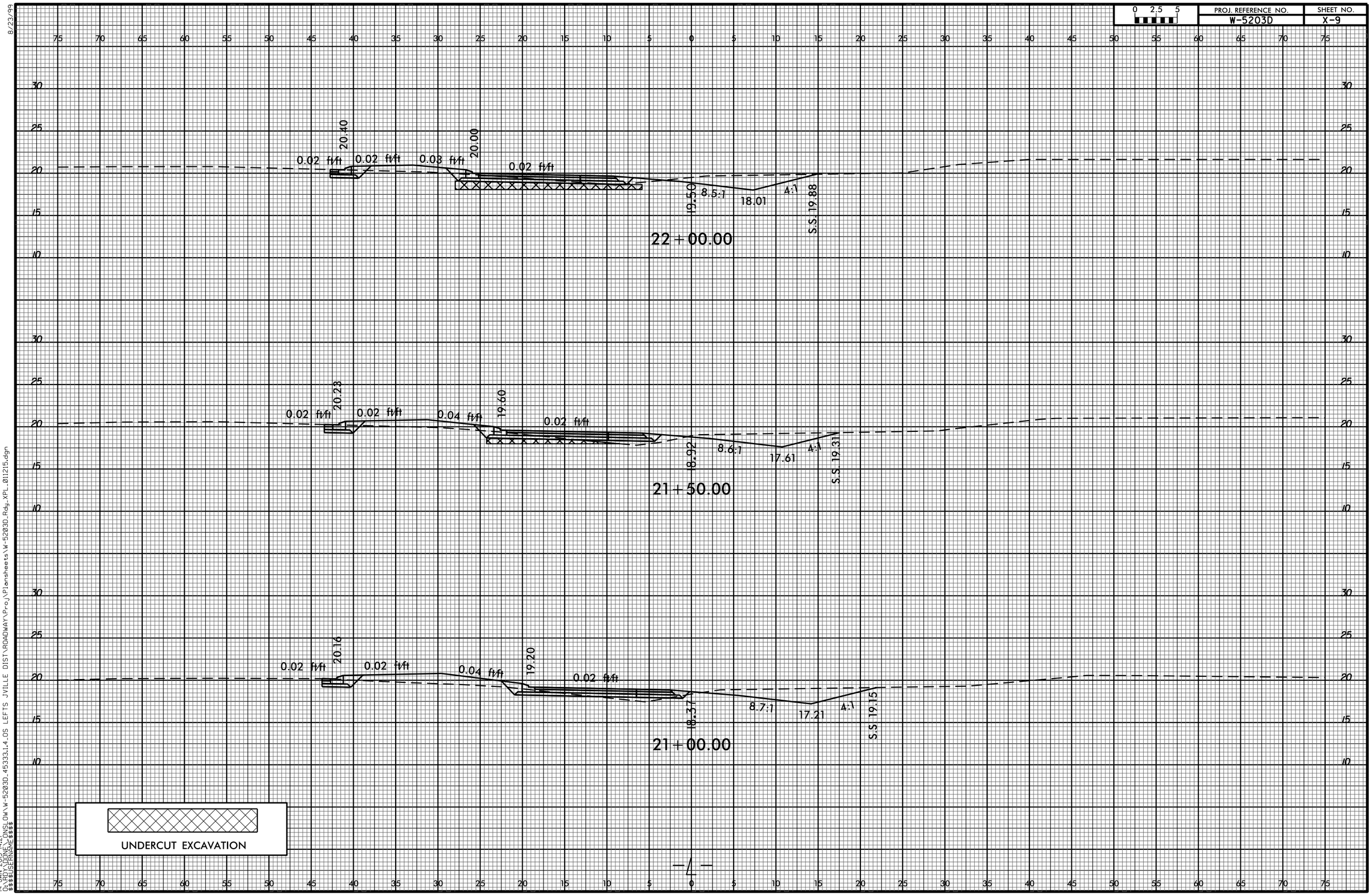

8/23/99
14-JAN-2015 14:21
Q:\RDY_DONE\ONSLOW\W-5203D_45333_1.4_OS LEFTS JVILLE DIST\ROADWAY\Proj\Plansheets\W-5203D_Rdy_XPL_011215.dgn
$$$$USERNAME$$$$

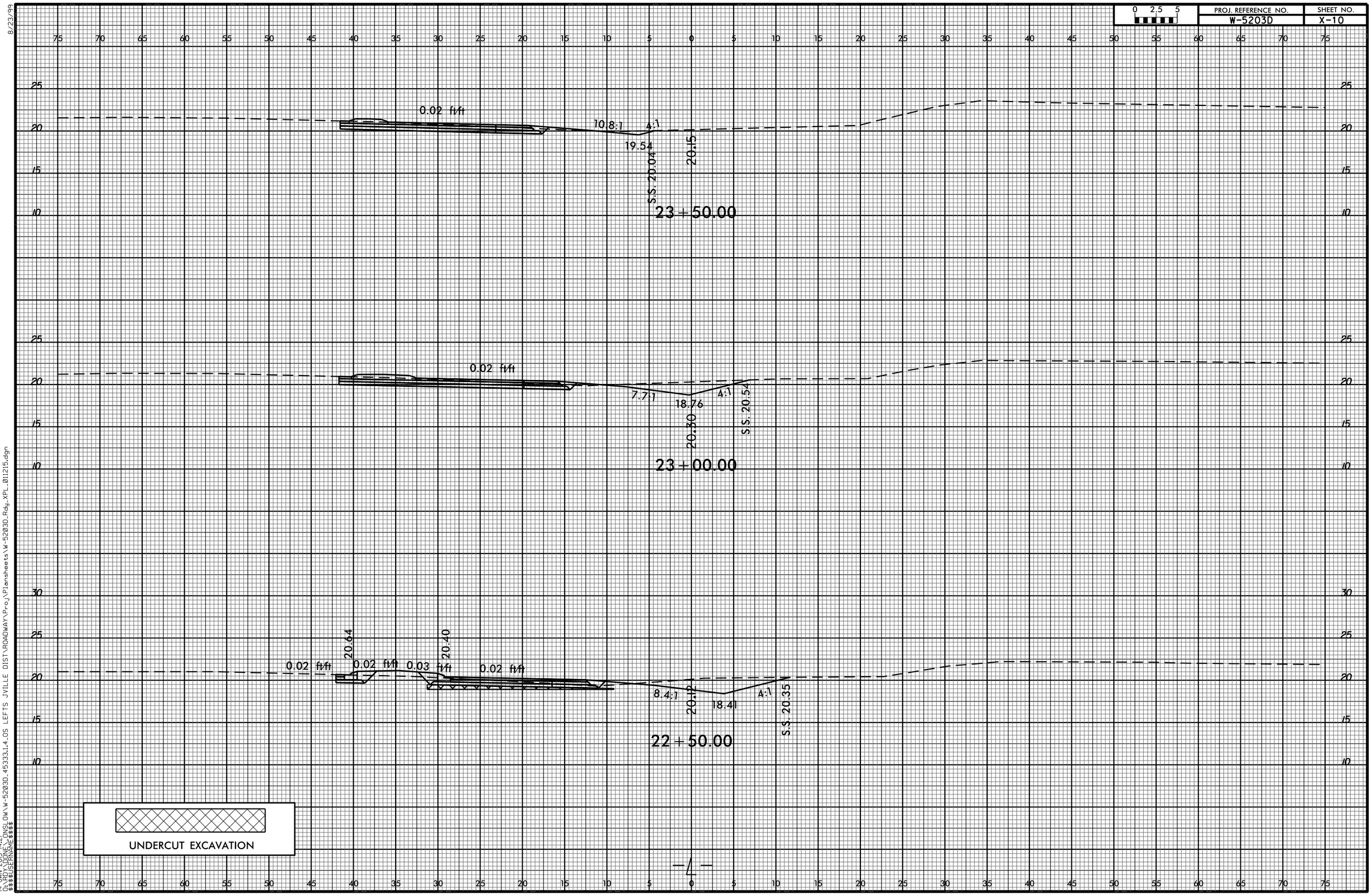
0 2.5 5
PROJ. REFERENCE NO.
W-5203D
SHEET NO.
X-10
0.02 ft/ft
10.8:1
4:1
19.54
S.S. 20.04
20.5
23+50.00
0.02 ft/ft
7.7:1
18.76
4:1
20.30
S.S. 20.54
23+00.00
0.02 ft/ft
20.64
0.02 ft/ft
0.03 ft/ft
20.40
0.02 ft/ft
8.4:1
20.12
18.41
4:1
S.S. 20.35
22+50.00
UNDERCUT EXCAVATION
8/23/99
14-JAN-2015 14:21
Q:\RDY_DONE\ONSLOW\W-5203D_45333_1.4_OS LEFTS JVILLE DIST\ROADWAY\Proj\Plansheets\W-5203D_Rdy_XPL_011215.dgn
$$$$USERNAME$$$$

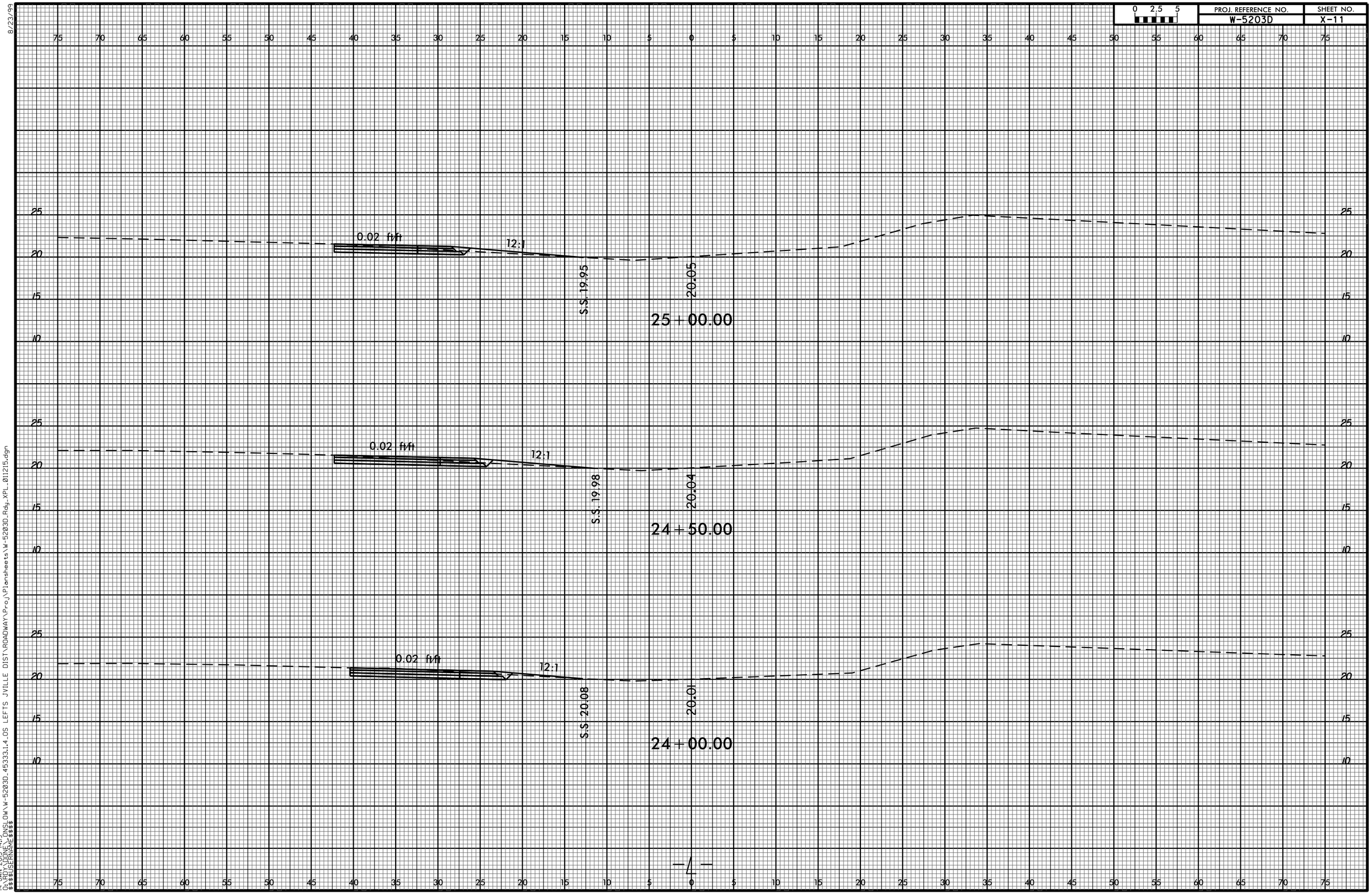

8/23/99

14-JAN-2015 14:19
O:\RDY_DONE\ONSLOW\W-5203D_45333_1.4_OS LEFTS JVILLE DIST\ROADWAY\Proj\Plansheets\W-5203D_Rdy_XPL_011215.dgn
$$$$USERNAME$$$$

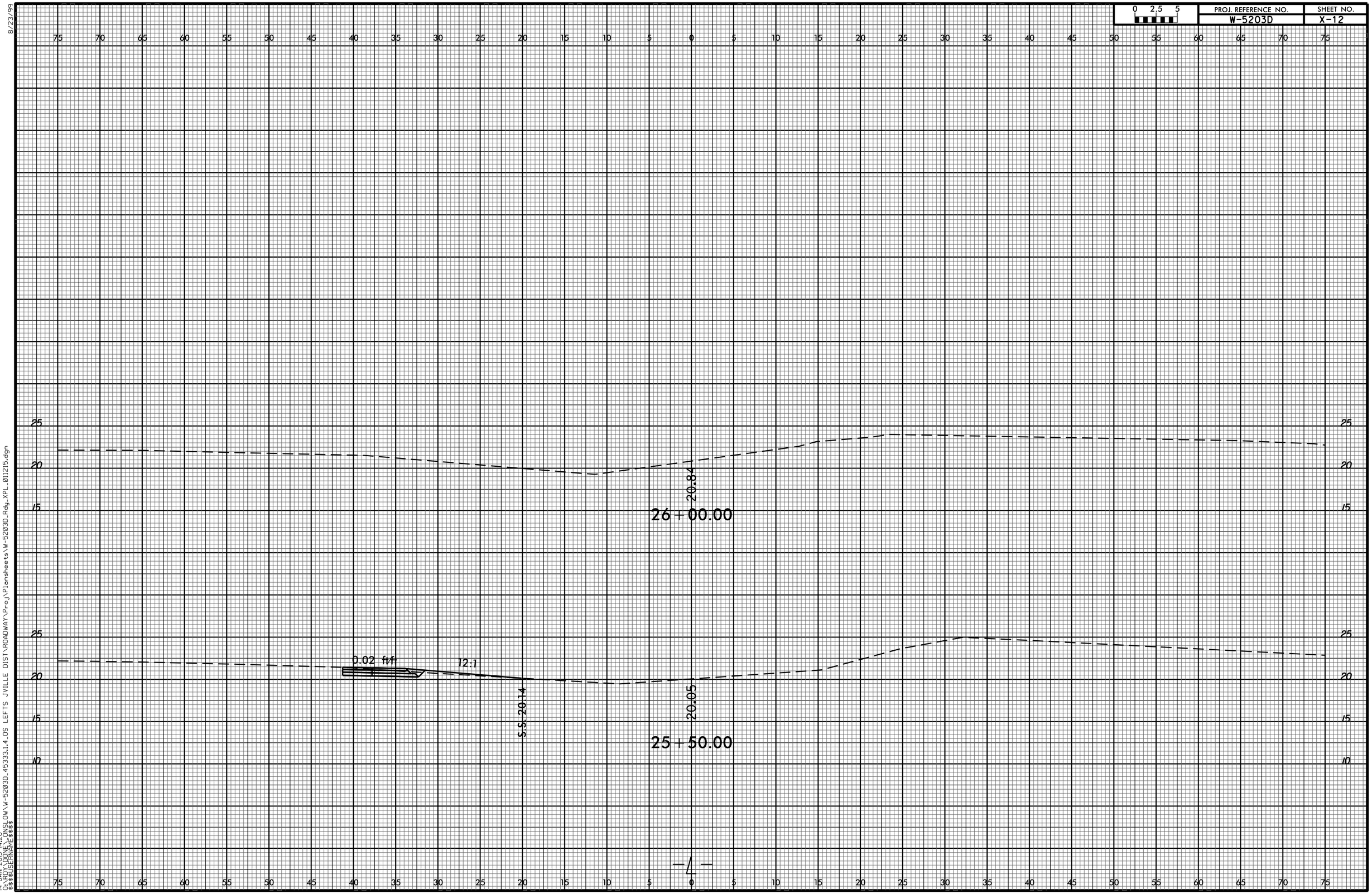

8/23/99

14-JAN-2015 14:20
Q:\RDY_DONE\ONSLOW\W-5203D_45333_1.4_OS LEFTS JVILLE DIST\ROADWAY\Proj\Plansheets\W-5203D_Rdy_XPL_011215.dgn
$$$$USERNAME$$$$