TIP PROJECT: BD-5103U

CONTRACT: DC00059

See Sheet 1-A For Index of Sheets

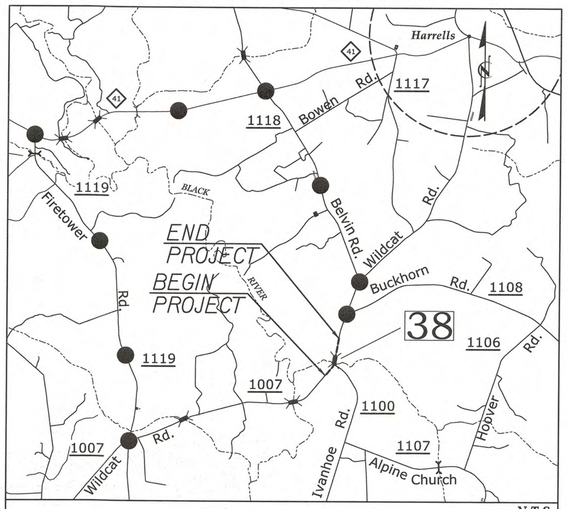

VICINITY MAP ●●● DETOUR ROUTE

STATE	PROJECT REFERENCE NO.	SHEET NO.	TOTAL SHEETS
NC	BD-5103U	1	X
STATE PROJ. NO.	F.A. PROJ. NO.	DESCRIPTION	
45349.3.FD21	BRZ-1007(23)	LIB REPLACEMENT	

STATE OF NORTH CAROLINA
DIVISION OF HIGHWAYS

SAMPSON COUNTY

LOCATION: BRIDGE NO. 038 OVER WILDCAT CREEK ON SR 1007 (WILDCAT RD.)

TYPE OF WORK: GRADING, PAVING, GUARDRAIL, DRAINAGE & STRUCTURE

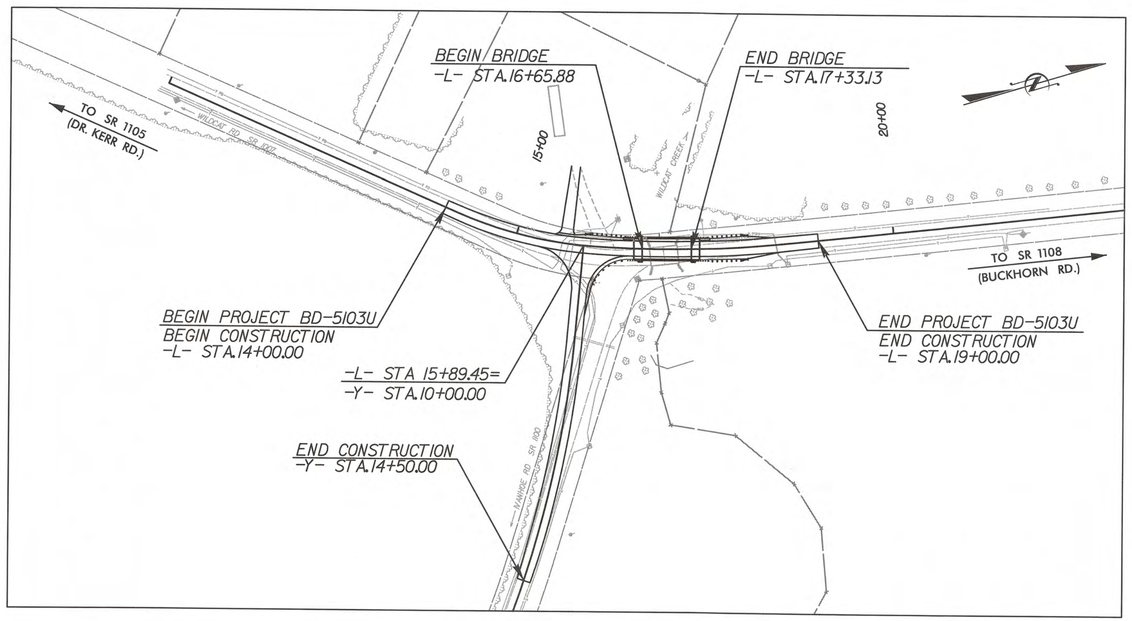

CLEARING ON THIS PROJECT SHALL BE PERFORMED TO THE LIMITS ESTABLISHED BY METHOD II.

GRAPHIC SCALES

50 25 0 50 100
PLANS

50 25 0 50 100
PROFILE (HORIZONTAL)

10 5 0 10 20
PROFILE (VERTICAL)

DESIGN DATA

ADT 2009 = 1000
ADT 2035 = 2000
DHV = 10%
D = 60%
T = 6% *
V = 40 MPH
* TTST 2% DUAL 4%
SUB REGIONAL TIER

PROJECT LENGTH

LENGTH OF ROADWAY TIP PROJECT BD-5103U = 0.082 MI.

LENGTH OF STRUCTURE TIP PROJECT BD-5103U = 0.013 MI.

TOTAL LENGTH OF TIP PROJECT BD-5103U = 0.095 MI.

Prepared In the Office of:
HNTB NORTH CAROLINA, P.C.
343 E. Six Forks Road, Suite 200
Raleigh, North Carolina 27609
NC License No: C-1554

2012 STANDARD SPECIFICATIONS

RIGHT OF WAY DATE: OCTOBER 31, 2013

LETTING DATE: FEBRUARY 20, 2014

ENRICO A. ROQUE, P.E.
PROJECT ENGINEER

ANTHONY THOMPSON, P.E.
PROJECT DESIGNER

AMANDA GLYNN, P.E.
NCDOT CONTACT

HYDRAULICS ENGINEER
NORTH CAROLINA PROFESSIONAL SEAL 15764 ENGINEER JAMES A BYRD
SIGNATURE: 2-19-14

ROADWAY DESIGN ENGINEER
NORTH CAROLINA PROFESSIONAL SEAL 19824 ENGINEER ENRICO A ROQUE
SIGNATURE: 2/19/14 P.E.

DIVISION OF HIGHWAYS
STATE OF NORTH CAROLINA
DEPARTMENT OF TRANSPORTATION

P.E.
STATE HIGHWAY DESIGN ENGINEER

2/4/2014
8:50:37 AM
...\Proj\NBD5103U_rdy_tsh.dgn

REVISIONS

INDEX OF SHEETS

SHEET NUMBER	SHEET
1	TITLE SHEET
1-A	INDEX OF SHEETS, GENERAL NOTES & LIST OF STANDARDS
1-B	SYMBOLOGY SHEET
2	TYPICAL SECTION SHEET
3	EARTHWORK, PAVEMENT REMOVAL, GUARDRAIL SUMMARY, ROW SUMMARY, & DRAINAGE SUMMARY SHEET
4	PLAN SHEET
5	PROFILE SHEET
TMP-1 THRU TMP-2	TRAFFIC CONTROL PLANS
EC-1 THRU EC-6	EROSION CONTROL PLANS
X-1 THRU X-7	-L- CROSS SECTION SHEETS
S-1 THRU S-14	BRIDGE PLANS
U0-1 THRU U0-2	UTILITIES BY OTHERS PLANS

GENERAL NOTES: 2012 SPECIFICATIONS
EFFECTIVE: 01-17-2012
REVISED: 07-30-2012

GRADE LINE:
GRADING AND SURFACING:

THE GRADE LINES SHOWN DENOTE THE FINISHED ELEVATION OF THE PROPOSED SURFACING AT GRADE POINTS SHOWN ON THE TYPICAL SECTIONS. GRADE LINES MAY BE ADJUSTED AT THEIR BEGINNING AND ENDING AND AT STRUCTURES AS DIRECTED BY THE ENGINEER IN ORDER TO SECURE A PROPER TIE-IN.

CLEARING:

CLEARING ON THIS PROJECT SHALL BE PERFORMED TO THE LIMITS ESTABLISHED BY METHOD II.

SUPERELEVATION:

ALL CURVES ON THIS PROJECT SHALL BE SUPERELEVATED IN ACCORDANCE WITH STD. NO. 225.04
SUPERELEVATION IS TO BE REVOLVED ABOUT THE GRADE POINTS SHOWN ON THE TYPICAL SECTIONS.

SHOULDER CONSTRUCTION:

ASPHALT, EARTH, AND CONCRETE SHOULDER CONSTRUCTION ON THE HIGH SIDE OF SUPERELEVATED CURVES SHALL BE IN ACCORDANCE WITH STD. 560.01.

SIDE ROADS:

THE CONTRACTOR WILL BE REQUIRED TO DO ALL NECESSARY WORK TO PROVIDE SUITABLE CONNECTIONS WITH ALL ROADS, STREETS, AND DRIVES ENTERING THIS PROJECT. THIS WORK WILL BE PAID FOR AT THE CONTRACT UNIT PRICE FOR THE PARTICULAR ITEMS INVOLVED.

DRIVEWAYS:

DRIVEWAYS SHALL BE CONSTRUCTED IN ACCORDANCE WITH STD. 848.02 USING 3' RADII OR RADII AS SHOWN ON THE PLANS. LOCATIONS OF DRIVES WILL BE AS SHOWN ON THE PLANS OR AS DIRECTED BY THE ENGINEER.

GUARDRAIL:

THE GUARDRAIL LOCATIONS SHOWN ON THE PLANS MAY BE ADJUSTED DURING CONSTRUCTION AS DIRECTED BY THE ENGINEER. THE CONTRACTOR SHOULD CONSULT WITH THE ENGINEER PRIOR TO ORDERING GUARDRAIL MATERIAL.

SUBSURFACE PLANS:

NO SUBSURFACE PLANS ARE AVAILABLE ON THIS PROJECT. THE CONTRACTOR SHOULD MAKE HIS OWN INVESTIGATION AS TO THE SUBSURFACE CONDITIONS.

UTILITIES:

UTILITY OWNERS ON THIS PROJECT ARE

Phone - Centurylink

ANY RELOCATION OF EXISTING UTILITIES WILL BE ACCOMPLISHED BY OTHERS.

RIGHT-OF-WAY MARKERS:

ALL RIGHT-OF-WAY MARKERS ON THIS PROJECT SHALL BE PLACED BY OTHERS.

12/4/2013
2:21:42 PM
...\Proj\BD5103U_rdy_gen.dgn

GENERAL NOTES:

HNTB NORTH CAROLINA, P.C.
343 E. Six Forks Road, Suite 200
Raleigh, North Carolina 27609
NC License No: C-1554

PROJECT REFERENCE NO.	SHEET NO.
BD-5103U	1-A
R/W SHEET NO.	

ROADWAY DESIGN ENGINEER

NORTH CAROLINA PROFESSIONAL SEAL 19824 ENGINEER
12/4/13

HYDRAULICS ENGINEER

EFF. 01-17-2012
REV. 10-30-2012

2012 ROADWAY ENGLISH STANDARD DRAWINGS

The following Roadway Standards as appear in "Roadway Standard Drawings" Highway Design Branch - N. C. Department of Transportation - Raleigh, N. C., Dated January, 2012 are applicable to this project and by reference hereby are considered a part of these plans:

STD.NO.	TITLE
DIVISION 2 - EARTHWORK	
200.02	Method of Clearing - Method II
225.02	Guide for Grading Subgrade - Secondary and Local
225.04	Method of Obtaining Superelevation - Two Lane Pavement
DIVISION 3 - PIPE CULVERTS	
300.01	Method of Pipe Installation
310.10	Driveway Pipe Construction
DIVISION 4 - MAJOR STRUCTURES	
422.10	Reinforced Bridge Approach Fills
DIVISION 5 - SUBGRADE, BASES AND SHOULDERS	
560.01	Method of Shoulder Construction - High Side of Superelevated Curve - Method I
DIVISION 8 - INCIDENTALS	
838.01	Concrete Endwall for Single and Double Pipe Culverts - 15" thru 48" Pipe 90 Skew
840.18	Concrete Grated Drop Inlet Type 'B' - 12" thru 36" Pipe
840.24	Frames and Narrow Slot Sag Grates
840.27	Brick Grated Drop Inlet Type 'B' - 12" thru 36" Pipe
840.29	Frames and Narrow Slot Flat Grates
840.35	Traffic Bearing Grated Drop Inlet - for Cast Iron Double Frame and Grates
840.72	Pipe Collar
846.01	Concrete Curb, Gutter and Curb & Gutter
848.02	Driveway Turnout - Radius Type
862.01	Guardrail Placement
862.02	Guardrail Installation
876.01	Rip Rap in Channels
876.02	Guide for Rip Rap at Pipe Outlets

-L- CENTERLINE COORDINATE LIST			
POINT	STATION	NORTHING	EASTING
POT	10+00.00	339002.5039	2232536.7020
BEG	14+00.00	339307.9799	2232794.9351
PC	14+16.38	339320.4919	2232805.5121
PCC	16+02.13	339480.1220	2232898.6543
PT	18+51.45	339720.2345	2232964.5974
END	19+00.00	339767.9912	2232973.3596
POT	29+46.05	340796.8666	2233162.1342
-Y- CENTERLINE COORDINATE LIST			
POT	10+00.00	339468.2844	2232894.1113
PC	11+25.16	339422.0581	2233010.4229
END	14+50.00	339269.1941	2233296.2661
PT	20+44.77	338841.3092	2233703.2793
POT	22+74.45	338645.9658	2233824.0930

NOTE: SEE SHEET NO. 4 FOR DATUM DESCRIPTION

PROJECT REFERENCE NO.	SHEET NO.
BD-5103U	1-B

Note: Not to Scale

****S.U.E. = Subsurface Utility Engineering***

STATE OF NORTH CAROLINA
DIVISION OF HIGHWAYS

CONVENTIONAL PLAN SHEET SYMBOLS

BOUNDARIES AND PROPERTY:

- State Line
- County Line
- Township Line
- City Line
- Reservation Line
- Property Line
- Existing Iron Pin — EIP
- Property Corner
- Property Monument — ECM
- Parcel/Sequence Number — 123
- Existing Fence Line
- Proposed Woven Wire Fence
- Proposed Chain Link Fence
- Proposed Barbed Wire Fence
- Existing Wetland Boundary — WLB
- Proposed Wetland Boundary — WLB
- Existing Endangered Animal Boundary — EAB
- Existing Endangered Plant Boundary — EPB

BUILDINGS AND OTHER CULTURE:

- Gas Pump Vent or U/G Tank Cap
- Sign — S
- Well — W
- Small Mine
- Foundation
- Area Outline
- Cemetery
- Building
- School
- Church
- Dam

HYDROLOGY:

- Stream or Body of Water
- Hydro, Pool or Reservoir
- Jurisdictional Stream — JS
- Buffer Zone 1 — BZ 1
- Buffer Zone 2 — BZ 2
- Flow Arrow
- Disappearing Stream
- Spring
- Wetland
- Proposed Lateral, Tail, Head Ditch — FLOW
- False Sump

RAILROADS:

- Standard Gauge — CSX TRANSPORTATION
- RR Signal Milepost — MILEPOST 35
- Switch — SWITCH
- RR Abandoned
- RR Dismantled

RIGHT OF WAY:

- Baseline Control Point
- Existing Right of Way Marker
- Existing Right of Way Line
- Proposed Right of Way Line — RW
- Proposed Right of Way Line with Iron Pin and Cap Marker — RW
- Proposed Right of Way Line with Concrete or Granite Marker — RW
- Existing Control of Access — CA
- Proposed Control of Access — CA
- Existing Easement Line — E
- Proposed Temporary Construction Easement — E
- Proposed Temporary Drainage Easement — TDE
- Proposed Permanent Drainage Easement — PDE
- Proposed Permanent Utility Easement — PUE

ROADS AND RELATED FEATURES:

- Existing Edge of Pavement
- Existing Curb
- Proposed Slope Stakes Cut — C
- Proposed Slope Stakes Fill — F
- Proposed Wheel Chair Ramp — WCR
- Proposed Wheel Chair Ramp Curb Cut — WCC
- Curb Cut for Future Wheel Chair Ramp — CCFR
- Existing Metal Guardrail
- Proposed Guardrail
- Existing Cable Guiderail
- Proposed Cable Guiderail
- Equality Symbol
- Pavement Removal

VEGETATION:

- Single Tree
- Single Shrub
- Hedge
- Woods Line
- Orchard
- Vineyard — Vineyard

EXISTING STRUCTURES:

MAJOR:

- Bridge, Tunnel or Box Culvert — CONC
- Bridge Wing Wall, Head Wall and End Wall — CONC WW

MINOR:

- Head and End Wall — CONC HW
- Pipe Culvert
- Footbridge
- Drainage Box: Catch Basin, DI or JB — CB
- Paved Ditch Gutter
- Storm Sewer Manhole — S
- Storm Sewer — S

UTILITIES:

POWER:

- Existing Power Pole
- Proposed Power Pole
- Existing Joint Use Pole
- Proposed Joint Use Pole
- Power Manhole — P
- Power Line Tower
- Power Transformer
- U/G Power Cable Hand Hole — HH
- H-Frame Pole
- Recorded U/G Power Line — P
- Designated U/G Power Line (S.U.E.*) — P

TELEPHONE:

- Existing Telephone Pole
- Proposed Telephone Pole
- Telephone Manhole — T
- Telephone Booth
- Telephone Pedestal — T
- Telephone Cell Tower
- U/G Telephone Cable Hand Hole — HH
- Recorded U/G Telephone Cable — T
- Designated U/G Telephone Cable (S.U.E.*) — T
- Recorded U/G Telephone Conduit — TC
- Designated U/G Telephone Conduit (S.U.E.*) — TC
- Recorded U/G Fiber Optics Cable — T FO
- Designated U/G Fiber Optics Cable (S.U.E.*) — T FO

WATER:

- Water Manhole — W
- Water Meter
- Water Valve
- Water Hydrant
- Recorded U/G Water Line — W
- Designated U/G Water Line (S.U.E.*) — W
- Above Ground Water Line — A/G Water

TV:

- TV Satellite Dish
- TV Pedestal — C
- TV Tower
- U/G TV Cable Hand Hole — HH
- Recorded U/G TV Cable — TV
- Designated U/G TV Cable (S.U.E.*) — TV
- Recorded U/G Fiber Optic Cable — TV FO
- Designated U/G Fiber Optic Cable (S.U.E.*) — TV FO

GAS:

- Gas Valve
- Gas Meter
- Recorded U/G Gas Line — G
- Designated U/G Gas Line (S.U.E.*) — G
- Above Ground Gas Line — A/G Gas

SANITARY SEWER:

- Sanitary Sewer Manhole
- Sanitary Sewer Cleanout
- U/G Sanitary Sewer Line — SS
- Above Ground Sanitary Sewer — A/G Sanitary Sewer
- Recorded SS Forced Main Line — FSS
- Designated SS Forced Main Line (S.U.E.*) — FSS

MISCELLANEOUS:

- Utility Pole
- Utility Pole with Base
- Utility Located Object
- Utility Traffic Signal Box — S
- Utility Unknown U/G Line — ?UTL
- U/G Tank; Water, Gas, Oil
- A/G Tank; Water, Gas, Oil
- U/G Test Hole (S.U.E.*)
- Abandoned According to Utility Records — AATUR
- End of Information — E.O.I.

HNTB NORTH CAROLINA, P.C.
343 E. Six Forks Road, Suite 200
Raleigh, North Carolina 27609
NC License No: C-1554

PROJECT REFERENCE NO.	SHEET NO.
BD-5103U	2
R/W SHEET NO.	

ROADWAY DESIGN ENGINEER

PAVEMENT DESIGN ENGINEER

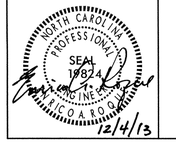

REVISIONS

PAVEMENT SCHEDULE	
C1	PROP. APPROX. 3" ASPHALT CONCRETE SURFACE COURSE, TYPE SF9.5A, AT AN AVERAGE RATE OF 165 LBS. PER SQ. YARD IN EACH OF TWO LAYERS.
E1	PROP. APPROX. 5" ASPHALT CONCRETE BASE COURSE, TYPE B25.0B, AT AN AVERAGE RATE OF 570 LBS. PER SQ. YARD.
E2	PROP. VARIABLE DEPTH ASPHALT CONCRETE BASE COURSE, TYPE B25.0B AT AN AVERAGE RATE OF 114 LBS. PER SQ. YARD PER INCH. DEPTH TO BE PLACED IN LAYERS NOT GREATER THAN 5.5" IN DEPTH OR LESS THAN 3" IN DEPTH.
R	SHOULDER BERM GUTTER
T	EARTH MATERIAL
U	EXISTING PAVEMENT
W	WEDGING (SEE DETAIL)

ALL PAVEMENT EDGE SLOPES ARE 1:1 UNLESS SHOWN OTHERWISE

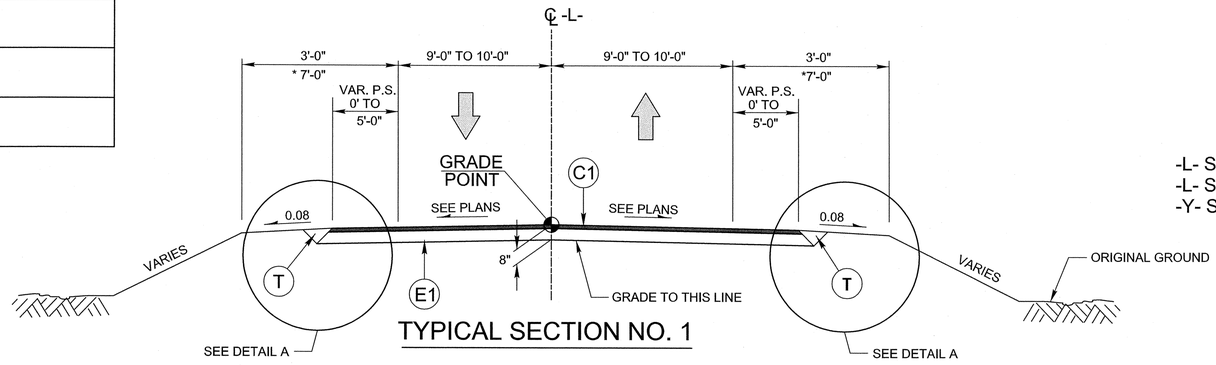

TYPICAL SECTION NO. 1

USE TYPICAL SECTION NO. 1 FROM:

-L- STA. 14+00.00 TO -L- STA. 16+65.88 (BEGIN BRIDGE)
-L- STA. 17+33.13 (END BRIDGE) TO -L- STA. 19+00.00
-Y- STA. 10+15.00 TO -Y- STA. 14+50.00

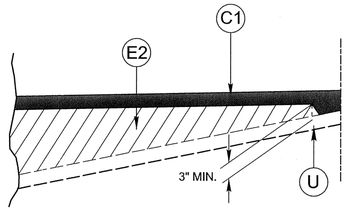

DETAIL SHOWING METHOD OF WEDGING
SEE TYPICAL SECTIONS

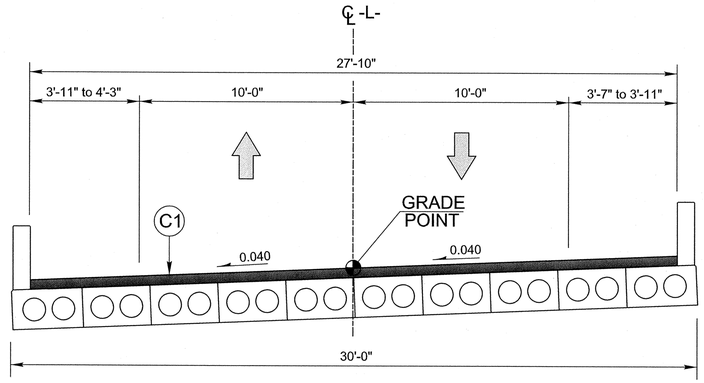

TYPICAL SECTION NO. 2
CORED SLAB BRIDGE OVERLAY

USE TYPICAL SECTION NO. 2 FROM:
-L- STA. 16+65.88 TO -L- STA. 17+33.13

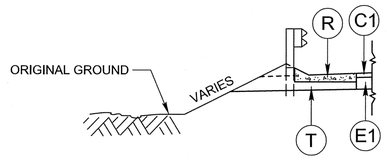

DETAIL A
SHOULDER BERM GUTTER LOCATIONS
-L- STA. 16+42.0 TO -L- STA. 16+54.4 LT
-L- STA. 17+44.6 TO -L- STA. 17+57.0 LT

NOTES: * SHOULDER WIDTH INCREASED 3' WITH THE USE OF GUARDRAIL

12/3/2013
7:16:21 PM
...\Proj\BD5103U_rdy_typ.dgn

Note: Approximate quantities only. Unclassified Excavation, Borrow Excavation, Fine Grading, Clearing and Grubbing, and Removal of Existing Pavement will be paid for at the contract lump sum price for "Grading."

HNTB NORTH CAROLINA, P.C.
343 E. Six Forks Road, Suite 200
Raleigh, North Carolina 27609
NC License No: C-1554

PROJECT REFERENCE NO.	SHEET NO.
BD-5103U	3
R/W SHEET NO.	

ROADWAY DESIGN ENGINEER

HYDRAULICS ENGINEER

SEAL 19824 ENGINEER NORTH CAROLINA PROFESSIONAL

12/6/13

REVISIONS

ROW AREA DATA SUMMARY

PARCEL NO.	PROPERTY OWNERS NAMES	TOTAL ACREAGE	AREA TAKEN (ACRES)	AREA REMAINING RT.	AREA REMAINING LT.	CONST. EASE.	PERM. DRAIN. EASE.	TEMP. DRAIN. EASE.
1	ELIZABETH HERRING	–	(0.28)			327.0		
2	PATRICIA L. TAYLOR	–	(0.11)			3832.2		
3	NORMAN T WATSON and WIFE PATTY	–	1763.2					

DRAINAGE SUMMARY

STATION	LOCATION (LT,RT, OR CL)	STRUCTURE NO. FROM	STRUCTURE NO. TO	TOP ELEVATION	INVERT ELEVATION	INVERT ELEVATION	SLOPE CRITICAL	CLASS III R.C. PIPE (UNLESS NOTED OTHERWISE) 15"	18"	24"	36"	QUANTITIES FOR DRAINAGE STRUCTURES PER EACH (0 THRU 5.0')	TOTAL L.F. FOR PAY QUANTITY SHALL BE COL.'A' + (1.3 X COL. 'B') A 5.0' THRU 10.0'	B 10.0' AND ABOVE	SIDE DRAIN PIPE 15"	18"	T.B. GRATED D.I., TYPE 'B' STD. 840.35	T.B.D.I. FRAME W/2 GRATES STD. 840.29	G.D.I. TYPE 'B' STD. 840.18 OR 840.27	G.D.I. (N.S. SAG) FRAME W/2 GRATES STD. 840.24	CONC. COLLARS (CY), STD. 840.72	CONCRETE ENDWALL (CY), STD. 838.01	REMARKS
SIZE																						
THICKNESS OR GAUGE																						
–L– 15+65.00	LT														36							
–L– 17+55.00	LT	0401		33.55								1					1	1				
–L– 17+55.00	LT	0401	OUT		30.10	29.90		20														
–Y– 11+17.00	RT	0402		32.50								1							1	1		
–Y– 11+17.00	RT	0402	EX		28.93	EX				24											.5526	1.5	REMOVE EXIST. HW
–Y– 12+80.00	CL	0403			31.50	30.78					72											
TOTAL								20		24	72	2			36		1	1	1	1	.5526	1.5	

ABBREVIATIONS

C.B.	CATCH BASIN
N.D.I.	NARROW DROP INLET
D.I.	DROP INLET
M.D.I.	MEDIAN DROP INLET
M.D.I. (N.S.)	MEDIAN DROP INLET (NARROW SLOT)
J.B.	JUNCTION BOX
M.H.	MANHOLE
T.B.D.I.	TRAFFIC BEARING DROP INLET
T.B.J.B.	TRAFFIC BEARING JUCTION BOX
G.D.I.	GRATED DROP INLET

PAVEMENT REMOVAL SUMMARY

IN SQUARE YARDS

LOCATION	REMOVAL OF ASPHALT PAVEMENT	BREAKING OF ASPHALT PAVEMENT
-L- STA. 14+00 TO 16+77	626	
-L- STA. 17+14 TO 19+00	393	
-Y- STA. 10+23 TO 14+50	1164	
GRAND TOTAL	2183	
SAY	2190	

SUMMARY OF EARTHWORK

IN CUBIC YARDS

STATION	STATION	UNCLASSIFIED EXCAVATION	EMBANK. +%	BORROW	WASTE
–L– STA. 14+00.00	–L– STA. 16+82.00	451	234		217
–L– STA. 17+08.00	–L– STA. 19+00.00	289	62		227
–Y– STA. 10+50.00	–Y– STA. 14+50.00	425	1295	870	
PROJECT SUBTOTAL		1165	1591	870	444
WASTE TO REPLACE BORROW				–444	–444
PROJECT TOTAL		1165	1591	426	0
GRAND TOTALS:		1165		426	
SAY:		1170		430	

ESTIMATED DDE = 190 CY

GUARDRAIL SUMMARY

SURVEY LINE	BEG. STA.	END STA.	LOCATION	LENGTH STRAIGHT	LENGTH SHOP CURVED	LENGTH DOUBLE FACED	WARRANT POINT APPROACH END	WARRANT POINT TRAILING END	"N" DIST. FROM E.O.L.	TOTAL SHOULDER WIDTH	FLARE LENGTH APPROACH END	FLARE LENGTH TRAILING END	W APPROACH END	W TRAILING END	ANCHORS XI MOD	XI	GRAU 350	TYPE 350 (TL–3)	XIII	CAT–1	III	BIC	AT–1	IMPACT ATTENUATOR TYPE 350 EA	G	NG	SINGLE FACED GUARDRAIL	REMOVE EXISTING GUARDRAIL	REMOVE AND STOCKPILE EXISTING GUARDRAIL	REMARKS
–L–	16+06.26	16+66.19	RT	25.0	50.0		16+66.19		4	7	50		1								1		1							
–L–	15+89.65	16+65.56	LT	75.0				16+65.56	4	7		50		1				1			1									
–L–	17+32.81	18+07.05	RT	75.0				17+32.81	4	7		50		1				1			1									
–L–	17+33.44	18+09.16	LT	75.0			17+33.44		4	7	50		1					1			1									
	LESS ANCHOR DEDUCTIONS																													
	TYPE III	4 @ 18.75'	=	75.0																										
	TYPE 350, TL–3	3 @ 50.00'	=	150.0																										
	AT–1	1 @ 6.25'	=	6.25																										
			TOTAL	18.75	50.0													3			4		1							
			SAY	25.0	50.0																									
	(5 ADDITIONAL GUARDRAIL POST)																													

12/6/2013
9:26:09 AM
...\Proj\BD5103U_rdy_sum.dgn

PLAN

HNTB NORTH CAROLINA, P.C.
343 E. Six Forks Road, Suite 200
Raleigh, North Carolina 27609
NC License No: C-1554

PROJECT REFERENCE NO.	SHEET NO.
BD-5103U	4
R/W SHEET NO.	

ROADWAY DESIGN ENGINEER — SEAL 19826 — 12/6/13

HYDRAULICS ENGINEER — SEAL 15764 — 12/6/13

REVISIONS

NAD 83/2011

-L- PI Sta 15+10.20
Δ = 19° 53' 33.7" (LT)
D = 10° 42' 34.2"
L = 185.75'
T = 93.82'
R = 535.00'

-L- PI Sta 17+27.10
Δ = 9° 55' 11.6" (LT)
D = 3° 58' 43.9"
L = 249.31'
T = 124.97'
R = 1,440.00'

-Y- PI Sta 16+01.25
Δ = 36° 35' 23.6" (RT)
D = 3° 58' 43.9"
L = 919.60'
T = 476.09'
R = 1,440.00'

-L- POT Sta. 10+00.00

BEGIN PROJECT BD-5103U
BEGIN CONSTRUCTION
-L- STA.14+00.00

END PROJECT BD-5103U
END CONSTRUCTION
-L- STA.19+00.00

END CONSTRUCTION
-Y- STA.14+50.00

-L- PC Sta. 14+16.38

-L- STA.15+89.45 =
-Y- POT Sta. 10+00.00

-Y- PC Sta. 11+25.16

-L- PT Sta. 18+51.45

-L- PCC Sta. 16+02.13

BEGIN APP.SLAB
-L- STA.16+54.88

BEGIN BRIDGE
-L- STA.16+65.88

END BRIDGE
-L- STA.17+33.13

END APP.SLAB
-L- STA.17+44.13

BEGIN SBG STA 16+54.4 LT.
BEGIN SBG STA 16+42.0 LT.
END SBG STA 17+57.0 LT.
BEGIN SBG STA 17+44.6 LT.

BM#1
BLA STA 10+82
142' LEFT
ELEV 35.93'

N 40°12'33.8" E

N 10°23'48.5" E

N 42°38'40" E 265.64'

S 49°34'00" E 329.02'

N 49°34'00" W 330.72'

N 46°52'49" W 288.19'

S 49°23'59" E 306.82'

S 68°19'31.3" E

N 52°50'47" W 14.98'

N 50°01'30" W 28.00'

S 25°10'16" W 86.25'

S 55°52'42" W 100.10'

S 14°23'19" W 418.24'

N 78°29'15" W 84.24'

N 44°57'39" W 75.71'

N 90°00'00" W 655.88'

BL-1
BL-2
BL-3
BL-4

TO FIRETOWER RD
TO HARRELLS
TO ALPINE CHURCH RD
WILDCAT RD SR 1007

EXISTING R/W
60' R/W
1 FO
WOODS
TREES
WILDCAT CREEK
EXIST. POWER POLE
EXIST. GUY WIRE
EXIST. TELEPHONE PEDESTAL
EXIST. TELEPHONE MANHOLE
EXIST. TELEPHONE BOX
EXIST. TELEPHONE RISER
EXIST. TELEPHONE MARKER
EXIST. TELEPHONE PEDESTAL
EXIST. TELEPHONE MANHOLE
EXIST. TELEPHONE BOX
EXIST. TELEPHONE RISER
EXIST. TELEPHONE MARKER

PRESLEY FRANKLIN MOHONEY
DB 1436 PG 961

PRESLEY FRANKLIN MOHONEY
DB 1504 PG 985

(1) ELIZABETH HERRING
DB 1337 PG 422

(2) Patricia L. Taylor
DB 1842 PG 508

(3) NORMAN T. WATSON and WIFE PATTY
DB 1260 PG 263

(4) WILLIAM LLOYD BOWEN
DB 1726 PG 700

SQUIRES TIMBER COMPANY
DB 1040 PG 839

SPECIAL CUT DITCH
SEE DETAIL A

SPECIAL LAT. 'V' DITCH
SEE DETAIL B

STD. BASE DITCH
10 CY DDE
S=0.50%
SEE DETAIL C

BASE DITCH
180 CY DDE
180 SY MATTING
S=0.80%
SEE DETAIL D

CLASS 'B' RIP-RAP
EST. 1 TONS
EST. 5 SY GEO

CLASS 'B' RIP-RAP
EST. 28 TONS
EST. 65 SY GEO

50' TAPER TO EXISTING

PIPE COLLAR

RETAIN

Point	North	East	Elevation
BL-1	340764.4120	2233178.4360	47.18
BL-2	340030.4950	2233039.6750	35.04
BL-3	339524.3000	2232956.0820	32.77
BL-4	339006.2110	2232560.9390	37.18

DATUM DESCRIPTION

THE LOCALIZED COORDINATE SYSTEM DEVELOPED FOR THIS PROJECT IS BASED ON THE STATE PLANE COORDINATES ESTABLISHED BY NCDOT FOR MONUMENT "BD5103U"
WITH NAD 83/NA 2011 STATE PLANE GRID COORDINATES OF
NORTHING: 2232147.864(ft) EASTING: 338526.222(ft)
ELEVATION: 35.52(ft)
THE AVERAGE COMBINED GRID FACTOR USED ON THIS PROJECT (GROUND TO GRID) IS: 0.99992580
THE N.C. LAMBERT GRID BEARING AND LOCALIZED HORIZONTAL GROUND DISTANCE FROM "BL-4" TO -L- STATION 10+00.00 IS
S 81° 18' 13.98" W 24.5189'
ALL LINEAR DIMENSIONS ARE LOCALIZED HORIZONTAL DISTANCES
VERTICAL DATUM USED IS NAVD 88

DETAIL A
SPECIAL CUT DITCH
(Not to Scale)
Natural Ground, 3:1, D, 3:1 or Flatter, Front Ditch Slope
Min. D = 1.0 Ft.
FROM -L- STA. 15+00 TO STA. 16+75 (LT)

DETAIL B
SPECIAL LATERAL 'V' DITCH
(Not to Scale)
Natural Ground, 3:1, D, 3:1, Fill Slope
Min. D = 2.0 Ft.
FROM -Y- STA. 10+50 TO STA. 11+60 (RT)

DETAIL C
STANDARD BASE DITCH
(Not to Scale)
Natural Ground, 3:1, D, 3:1, Natural Ground
Min. D = 2.0 Ft.
B = 3.0 Ft.
-Y- STA. 12+80 (RT)

DETAIL D
BASE DITCH WITH FLOODPLAIN BENCH
(Not to Scale)
Natural Ground, 3:1, X, 3:1, D, 3:1, Natural Ground, Coir Fiber Matting, B
D = 1.0 Ft.
B = 4.0 Ft.
X = 5.0 Ft.
-Y- STA. 12+80 (LT)

NOTES:
FOR -L- PROFILE SEE SHEET No. 5
FOR -Y- PROFILE SEE SHEET No. 5
THE CONTRACTOR SHALL CONSTRUCT THE PROPOSED OUTFALL CHANNEL LEFT OF -Y- STA.12+80 IN THE INITIAL PHASE, BEFORE PIPE INSTALLATION, ALLOWING CHANNEL STABILIZATION.

12/6/2013
9:15:11 AM
...\Proj\BD5103U_rdy_psh_s04.dgn

HNTB NORTH CAROLINA, P.C.
343 E. Six Forks Road, Suite 200
Raleigh, North Carolina 27609
NC License No: C-1554

PROJECT REFERENCE NO.	SHEET NO.
BD-5103U	5

ROADWAY DESIGN ENGINEER — NORTH CAROLINA PROFESSIONAL SEAL 19824 ENGINEER RICO A ROOLE — 12/4/13

HYDRAULICS ENGINEER — NORTH CAROLINA PROFESSIONAL SEAL 13764 ENGINEER JAMES A BYRD — 12/4/13

BRIDGE HYDRAULIC DATA

DESIGN DISCHARGE	=	800	CFS
DESIGN FREQUENCY	=	25	YRS
DESIGN HW ELEVATION	=	30.7	FT
BASE DISCHARGE	=	1333	CFS
BASE FREQUENCY	=	100	YRS
BASE HW ELEVATION	=	31.93	FT
OVERTOPPING DISCHARGE	=	2100	CFS
OVERTOPPING FREQUENCY	=	500(+)	YRS
OVERTOPPING ELEVATION	=	33.15	FT
DATE OF SURVEY	=	02-06-13	
W.S. ELEVATION AT DATE OF SURVEY	=	25.7	FT

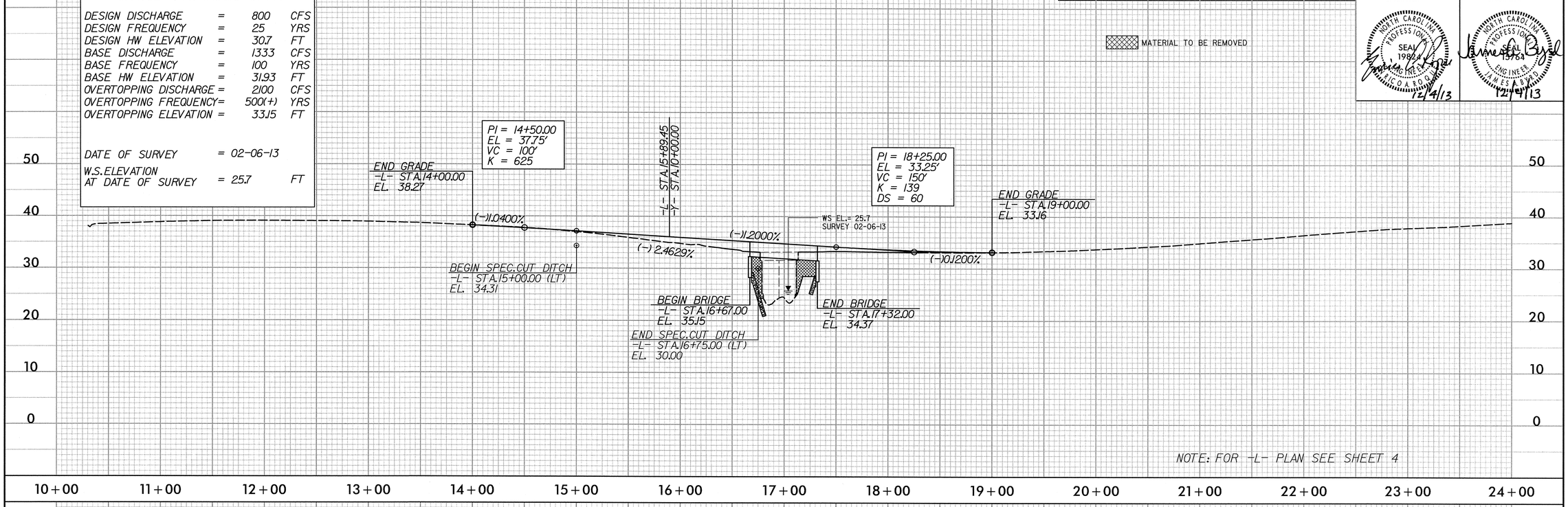

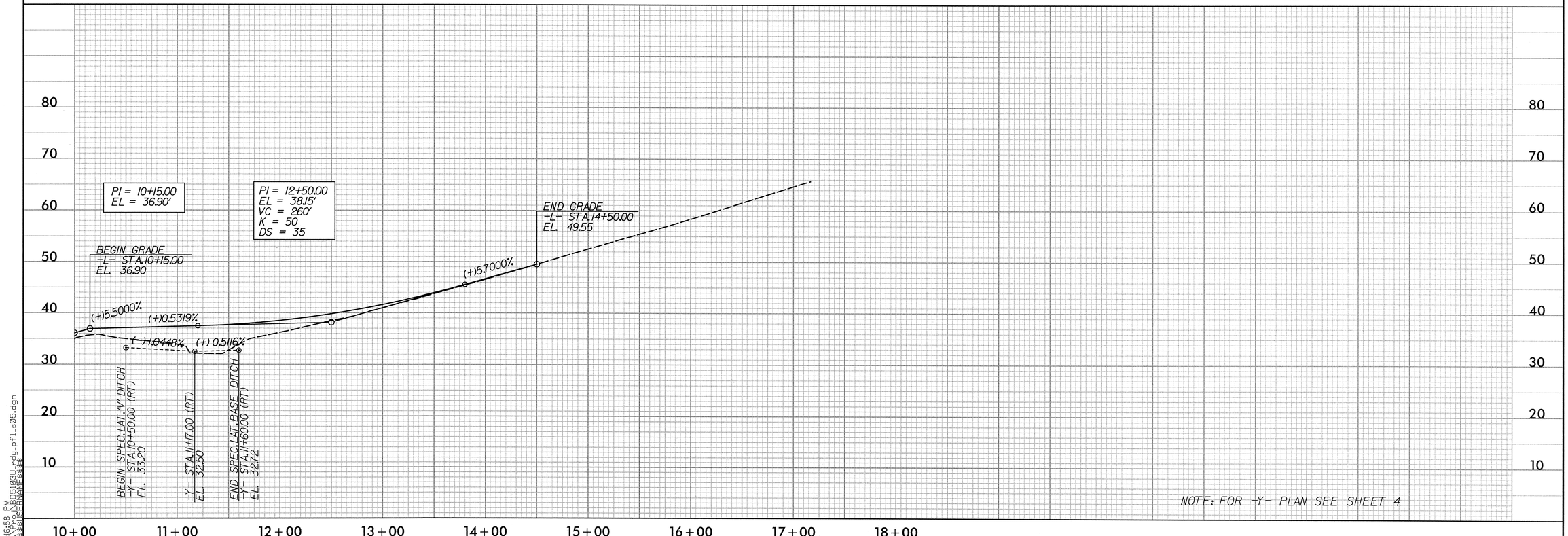

5/28/99

7:16:58 PM
..\Proj\BD5103U_rdy_pfl_s05.dgn
$$$$USERNAME$$$$

STATE OF NORTH CAROLINA
DIVISION OF HIGHWAYS

TRANSPORTATION MANAGEMENT PLAN

SAMPSON COUNTY

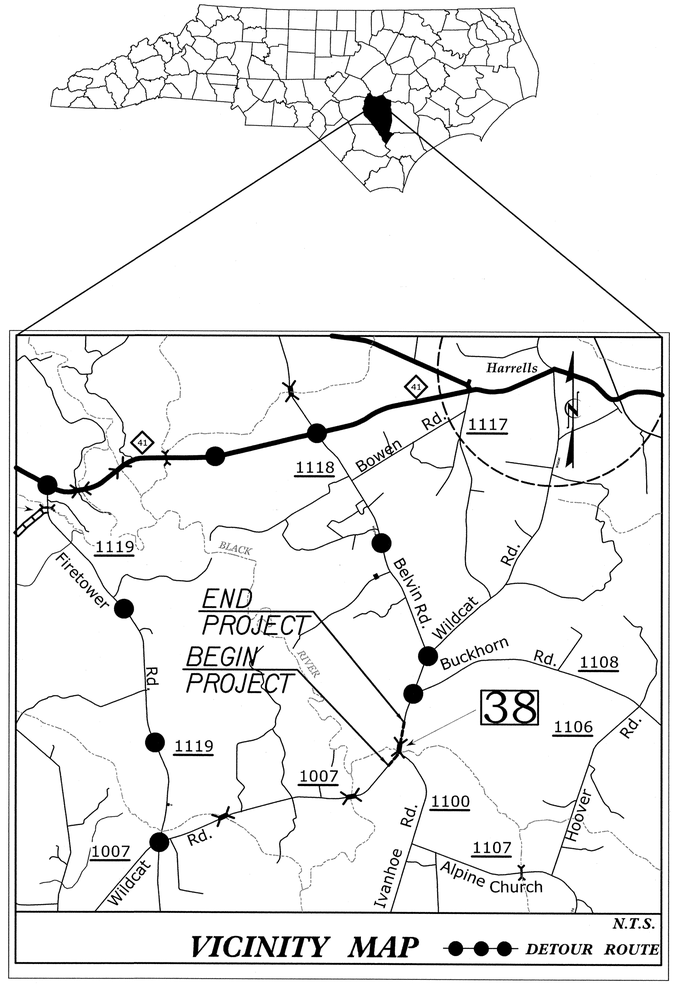

INDEX OF SHEETS

SHEET NO.	TITLE
TMP-1	TITLE SHEET, INDEX OF SHEETS AND LIST OF APPLICABLE ROADWAY STANDARD DRAWINGS
TMP-2	PHASING, GENERAL NOTES AND DETOUR SIGNING

ROADWAY STANDARD DRAWINGS

THE FOLLOWING ROADWAY STANDARDS AS SHOWN IN "ROADWAY STANDARD DRAWINGS" PROJECT SERVICES UNIT - N.C. DEPARTMENT OF TRANSPORTATION - RALEIGH, N.C. DATED JAN 2012 ARE APPLICABLE TO THIS PROJECT AND BY REFERENCE HEREBY ARE CONSIDERED A PART OF THESE PLANS:

STD. NO.	TITLE
1101.03	TEMPORARY ROAD CLOSURES
1101.11	TRAFFIC CONTROL DESIGN TABLES
1110.01	STATIONARY WORK ZONE SIGNS
1145.01	BARRICADES
1205.01	PAVEMENT MARKINGS - LINE TYPES & OFFSETS
1205.02	PAVEMENT MARKINGS - 2 LANE & MULTILANE ROADWAYS
1205.12	PAVEMENT MARKINGS - BRIDGES
1250.01	PAVEMENT MARKER SPACING
1251.01	RAISED PAVEMENT MARKERS - (TEMPORARY & PERMANENT)
1261.01	GUARDRAIL AND BARRIER DELINEATOR SPACING
1261.02	GUARDRAIL AND BARRIER DELINEATOR TYPE
1262.01	GUARDRAIL END DELINEATION

LEGEND

TRAFFIC CONTROL DEVICES

BARRICADE (TYPE III)

TEMPORARY SIGNING

STATIONARY SIGN

HNTB NORTH CAROLINA, P.C.
343 E. Six Forks Road, Suite 200
Raleigh, North Carolina 27609
NC License No: C-1554

R. B. EARLY, PE — *TRAFFIC CONTROL PROJECT ENGINEER*
R. B. EARLY, PE — *TRAFFIC CONTROL PROJECT DESIGN ENGINEER*
J. A. PHILLIPS — *TRAFFIC CONTROL DESIGN ENGINEER*

APPROVED: Rhonda B. Early
DATE: 12-4-13

SEAL

NORTH CAROLINA PROFESSIONAL SEAL 023521 ENGINEER RHONDA B. EARLY

SHEET NO.
TMP-1

BD-5103U

TIP PROJECT:

WORK ZONE SAFETY & MOBILITY
"from the MOUNTAINS to the COAST"

N.C.D.O.T. WORK ZONE TRAFFIC CONTROL
1561 MAIL SERVICE CENTER (MSC) RALEIGH, NC 27699-1561
750 N. GREENFIELD PARKWAY, GARNER, NC 27529 (DELIVERY)
PHONE: (919) 773-2800 FAX: (919) 771-2745

KATHERINE HITE, PE — *DIVISION TRAFFIC ENGINEER*

DIVISION OF HIGHWAYS * STATE OF NORTH CAROLINA * DEPARTMENT OF TRANSPORTATION * WORK ZONE TRAFFIC CONTROL *

10:06:02 AM
::\BD-5103U_tc_TCP_01_title.dgn
$$$$USERNAME$$$$

PROJ. REFERENCE NO.	SHEET NO.
BD-5103U	TMP-2

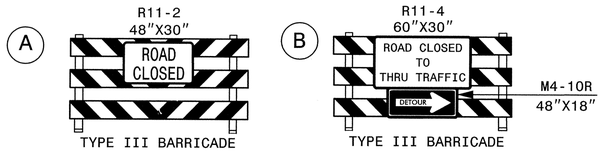

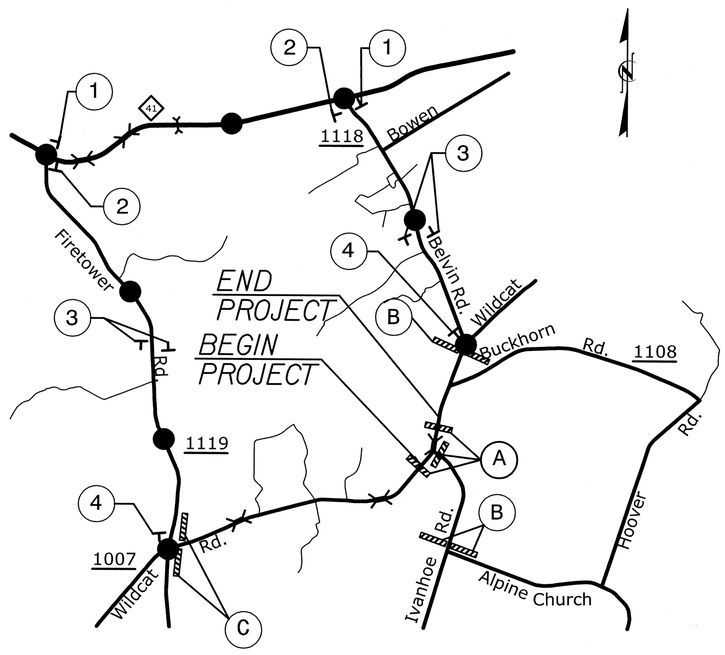

GENERAL NOTES

CHANGES MAY BE REQUIRED WHEN PHYSICAL DIMENSIONS IN THE DETAIL DRAWINGS, STANDARD DETAILS, AND ROADWAY DETAILS ARE NOT ATTAINABLE TO MEET FIELD CONDITIONS OR RESULT IN DUPLICATE OR UNDESIRED OVERLAPPING OF DEVICES. MODIFICATION MAY INCLUDE: MOVING, SUPPLEMENTING, COVERING, OR REMOVAL OF DEVICES AS DIRECTED BY THE ENGINEER.

THE FOLLOWING GENERAL NOTES APPLUY AT ALL TIMES FOR THE DURATION OF THE CONSTRUCTION PROJECT EXCEPT WHEN OTHERWISE NOTED IN THE PLAN OR DIRECTED BY THE ENGINEER.

LANE AND SHOULDER CLOSURE REQUIREMENTS

A) REMOVE LANE CLOSURE DEVICES FROM THE LANE WHEN WORK IS NOT BEING PERFORMED BEHIND THE LANE CLOSURE OR WHEN A LANE CLOSURE IS NO LONGER NEEDED OR AS DIRECTED BY THE ENGINEER.

B) WHEN PERSONNEL AND/OR EQUIPMENT ARE WORKING WITHIN 15 FT OF AN OPEN TRAVEL LANE, CLOSE THE NEAREST OPEN SHOULDER USING ROADWAY STANDARD DRAWING NO. 1101.04 UNLESS THE WORK AREA IS PROTECTED BY BARRIER OR GUARDRAIL OR A LANE CLOSURE IS INSTALLED.

TRAFFIC PATTERN ALTERATIONS

C) NOTIFY THE ENGINEER TWENTY ONE (21) CALENDAR DAYS PRIOR TO ANY TRAFFIC PATTERN ALTERATION.

SIGNING

D) INSTALL ADVANCE WORK ZONE WARNING SIGNS WHEN WORK IS WITHIN 40 FT FROM THE EDGE OF TRAVEL LANE AND NO MORE THAN THREE (3) DAYS PRIOR TO THE BEGINNING OF CONSTRUCTION.

E) PROVIDE SIGNING AND DEVICES REQUIRED TO CLOSE THE ROAD. PROVIDE SIGNING REQUIRED FOR THE OFF-SITE DETOUR ROUTE AS SHOWN ON THIS SHEET.

F) COVER OR REMOVE ALL SIGNS AND DEVICES REQUIRED TO CLOSE THE ROAD WHEN ROAD CLOSURE IS NOT IN OPERATION.

COVER OR REMOVE ALL SIGNS REQUIRED FOR THE OFF-SITE DETOUR WHEN THE DETOUR IS NOT IN OPERATION.

G) ENSURE ALL NECESSARY SIGNING IS IN PLACE PRIOR TO ALTERING ANY TRAFFIC PATTERN.

TRAFFIC CONTROL DEVICES

H) PLACE TYPE III BARRICADES, WITH "ROAD CLOSED" SIGN R11-2 ATTACHED, OF SUFFICIENT LENGTH TO CLOSE ENTIRE ROADWAY.

PAVEMENT MARKINGS AND MARKERS

J) INSTALL PAVEMENT MARKINGS ON THE FINAL SURFACE AS FOLLOWS:

ROAD NAME	MARKING	MARKERS
SR 1007 (WILDCAT ROAD)	PAINT	RAISED
SR 1100 (IVANHOE ROAD)	PAINT	RAISED

K) TIE PROPOSED PAVEMENT MARKING LINES TO EXISTING PAVEMENT MARKING LINES.

K) REMOVE/REPLACE ANY CONFLICTING/DAMAGED PAVEMENT MARKINGS.

L) PASSING ZONE WILL BE DETERMINED IN THE FIELD AND MUST BE APPROVED BY THE ENGINEER.

PHASING

PHASE I

PRIOR TO ANY CONSTRUCTION OPERATIONS, PLACE AND COVER OFF-SITE DETOUR SIGNING AS SHOWN ON TCP-2 AND IN ACCORDANCE WITH RSD 1101.03 (SHEET 1 OF 9).

PHASE II

USING OFF-SITE DETOUR, UNCOVER DETOUR SIGNS, CLOSE -L- (SR 1007 / WILDCAT ROAD) AND -Y1- (SR 1100 / IVANHOE ROAD) TO TRAFFIC AND CONSTRUCT BRIDGE, APPROACHES AND ROADWAY UP TO AND INCLUDING FINAL LAYER OF SURFACE COURSE.

PHASE III

UPON COMPLETION OF BRIDGE, APPROACHES AND ROADWAY, PLACE FINAL PAVEMENT MARKING IN ACCORDANCE WITH RSD 1205.01. REMOVE BARRICADES AND DETOUR SIGNS AND OPEN -L- (SR 1007 / WILDCAT ROAD) AND -Y1- (SR 1100 / IVANHOE ROAD) TO TRAFFIC.

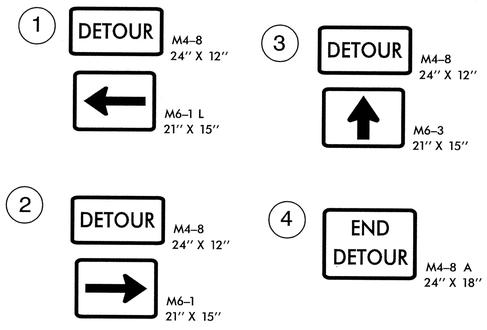

PROPOSED DETOUR

DETOUR ROUTE

APPROVED: Rhonda B Early DATE: 12.4.13

SEAL

NORTH CAROLINA PROFESSIONAL SEAL 023521 ENGINEER RHONDA B. EARLY

HNTB NORTH CAROLINA, P.C.
343 E. Six Forks Road, Suite 200
Raleigh, North Carolina 27609
NC License No: C-1554

DIVISION OF HIGHWAYS * STATE OF NORTH CAROLINA * DEPARTMENT OF TRANSPORTATION * WORK ZONE TRAFFIC CONTROL

TRANSPORTATION MANAGEMENT PLAN

NOTES AND PHASING

8/17/99

REVISIONS

QA/QC STAGE:

REVIEW:
CONCUR:
REVISE:
VERIFY:

2:34:03 PM
$$$$USERNAME$$$$
C:\Projects\BD-5103U_to_TCP_detour.dgn

STATE	STATE PROJECT REFERENCE NO.	SHEET NO.	TOTAL SHEETS
N.C.	BD-5103U	EC-1	6

STATE PROJ. NO.	F. A. PROJ. NO.	DESCRIPTION

STATE OF NORTH CAROLINA
DIVISION OF HIGHWAYS

PLAN FOR PROPOSED
HIGHWAY EROSION CONTROL

LOCATION: SAMPSON COUNTY BRIDGE NO.38 OVER WILDCAT CREEK ON SR 1007 (WILDCAT RD.)

TYPE OF WORK: GRADING, PAVING, GUARDRAIL, DRAINAGE & STRUCTURE

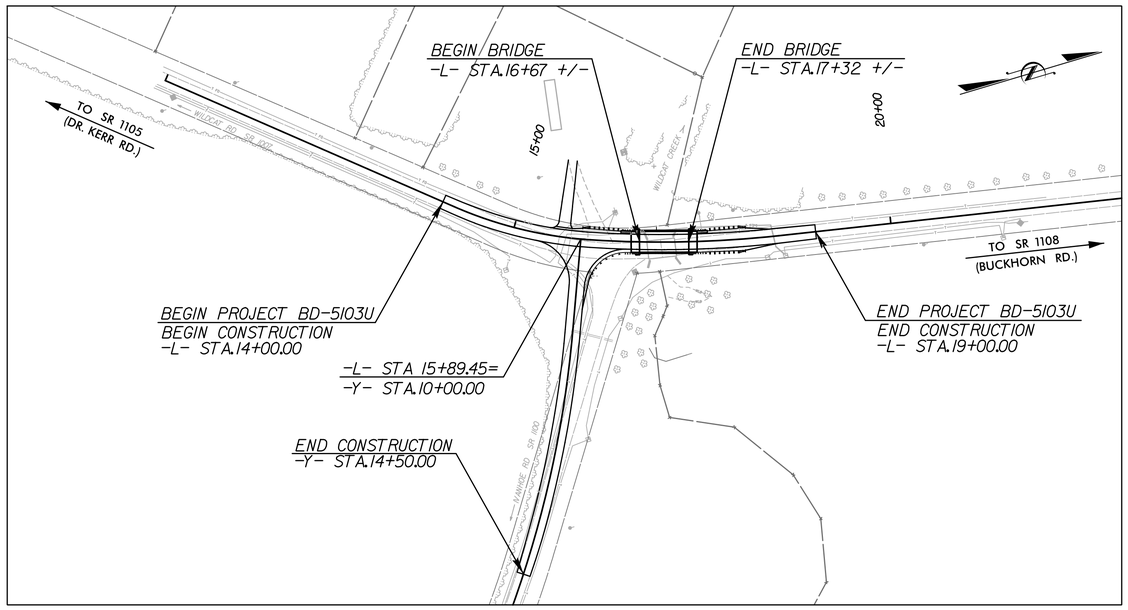

EROSION AND SEDIMENT CONTROL MEASURES

Std. #	Description	Symbol
1630.03	Temporary Silt Ditch	TSD
1630.05	Temporary Diversion	TD
1605.01	Temporary Silt Fence	
1606.01	Special Sediment Control Fence	
1622.01	Temporary Berms and Slope Drains	
	Silt Basin Type B	
1633.01	Temporary Rock Silt Check Type-A	
	Temporary Rock Silt Check Type-A with Matting and Polyacrylamide (PAM)	
	Temporary Rock Silt Check Type-B	
	Wattle / Coir Fiber Wattle	
	Wattle / Coir Fiber Wattle with Polyacrylamide (PAM)	
1634.01	Temporary Rock Sediment Dam Type-A	
1634.02	Temporary Rock Sediment Dam Type-B	
1635.01	Rock Pipe Inlet Sediment Trap Type-A	
1635.02	Rock Pipe Inlet Sediment Trap Type-B	
1630.04	Stilling Basin	
1630.06	Special Stilling Basin	
	Rock Inlet Sediment Trap:	
1632.01	Type A	A
1632.02	Type B	B
1632.03	Type C	C
	Skimmer Basin	
	Tiered Skimmer Basin	
	Infiltration Basin	

TIP PROJECT: BD-5103U

GRAPHIC SCALE

0

PLANS

0

PROFILE (HORIZONTAL)

0

PROFILE (VERTICAL)

ROADSIDE ENVIRONMENTAL UNIT
DIVISION OF HIGHWAYS
STATE OF NORTH CAROLINA

THESE EROSION AND SEDIMENT CONTROL PLANS COMPLY WITH THE REGULATIONS SET FORTH BY THE NCG-010000 GENERAL CONSTRUCTION PERMIT EFFECTIVE AUGUST 3, 2011 ISSUED BY THE NORTH CAROLINA DEPARTMENT OF ENVIRONMENT AND NATURAL RESOURCES DIVISION OF WATER QUALITY.

Prepared In the Office of:

HNTB NORTH CAROLINA, P.C.
343 E. Six Forks Road, Suite 200
Raleigh, North Carolina 27609
NC License No: C-1554

2012 STANDARD SPECIFICATIONS

PHILLIP E. ROGERS, P.E.
EROSION CONTROL
LEVEL III-A
CERTIFICATION #330

Roadway Standard Drawings

The following roadway english standards as appear in "Roadway Standard Drawings"– Roadway Design Unit – N. C. Department of Transportation – Raleigh, N. C., dated January 2012 and the latest revison thereto are applicable to this project and by reference hereby are considered a part of these plans.

1604.01	Railroad Erosion Control Detail	1632.01	Rock Inlet Sediment Trap Type A
1605.01	Temporary Silt Fence	1632.02	Rock Inlet Sediment Trap Type B
1606.01	Special Sediment Control Fence	1632.03	Rock Inlet Sediment Trap Type C
1607.01	Gravel Construction Entrance	1633.01	Temporary Rock Silt Check Type A
1622.01	Temporary Berms and Slope Drains	1633.02	Temporary Rock Silt Check Type B
1630.01	Riser Basin	1634.01	Temporary Rock Sediment Dam Type A
1630.02	Silt Basin Type B	1634.02	Temporary Rock Sediment Dam Type B
1630.03	Temporary Silt Ditch	1635.01	Rock Pipe Inlet Sediment Trap Type A
1630.04	Stilling Basin	1635.02	Rock Pipe Inlet Sediment Trap Type B
1630.05	Temporary Diversion	1640.01	Coir Fiber Baffle
1630.06	Special Stilling Basin	1645.01	Temporary Stream Crossing
1631.01	Matting Installation		

10:38:35 AM
BD5103U_ec_tsh.dgn
$$$$USERNAME$$$$

6/2/99

PROJECT REFERENCE NO.	SHEET NO.
BD-5103U	EC-2

COIR FIBER WATTLE WITH POLYACRYLAMIDE (PAM) DETAIL

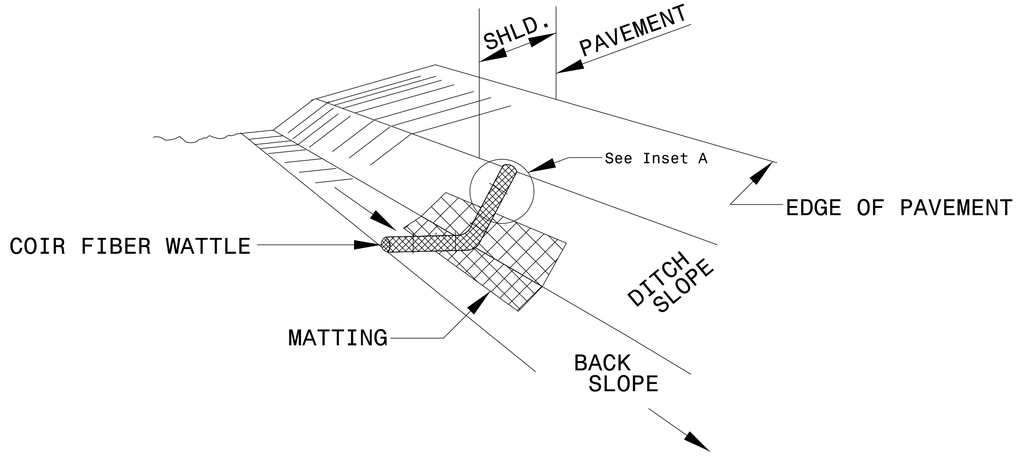

ISOMETRIC VIEW

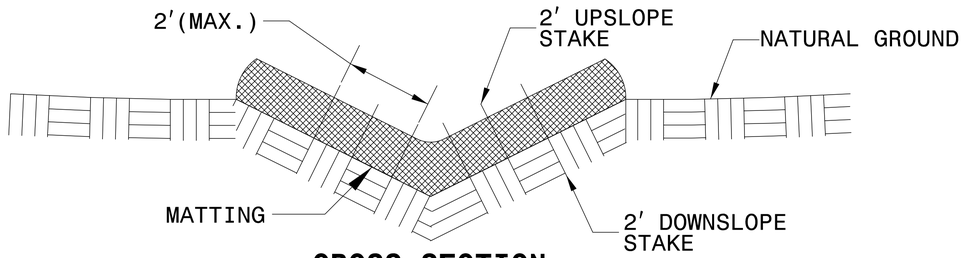

CROSS SECTION VEE DITCH

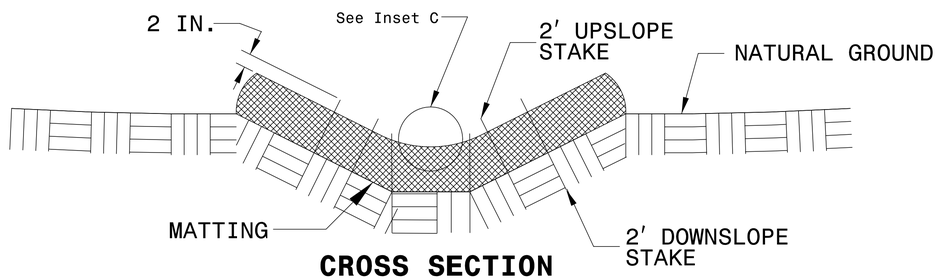

CROSS SECTION TRAPEZOIDAL DITCH

NOTES:

USE MINIMUM 12 IN. DIAMETER COIR FIBER (COCONUT FIBER) WATTLE.

USE 2 FT. WOODEN STAKES WITH A 2 IN. BY 2 IN. NOMINAL CROSS SECTION.

ONLY INSTALL WATTLE(S) TO A HEIGHT IN DITCH SO FLOW WILL NOT WASH AROUND WATTLE AND SCOUR DITCH SLOPES AND AS DIRECTED.

INSTALL A MINIMUM OF 2 UPSLOPE STAKES AND 4 DOWNSLOPE STAKES AT AN ANGLE TO WEDGE WATTLE TO BOTTOM OF DITCH.

PROVIDE STAPLES MADE OF 0.125 IN. DIAMETER STEEL WIRE FORMED INTO A U SHAPE NOT LESS THAN 12″ IN LENGTH.

INSTALL STAPLES APPROXIMATELY EVERY 1 LINEAR FOOT ON BOTH SIDES OF WATTLE AND AT EACH END TO SECURE IT TO THE SOIL.

INSTALL MATTING IN ACCORDANCE WITH SECTION 1631 OF THE STANDARD SPECIFICATIONS.

PRIOR TO POLYACRYLAMIDE (PAM) APPLICATION, OBTAIN A SOIL SAMPLE FROM PROJECT LOCATION, AND FROM OFFSITE MATERIAL, AND ANALYZE FOR APPROPRIATE PAM FLOCCULANT TO BE APPLIED TO EACH WATTLE.

INITIALLY APPLY 2 OUNCES OF ANIONIC OR NEUTRALLY CHARGED PAM OVER WATTLE WHERE WATER WILL FLOW AND 1 OUNCE OF PAM ON MATTING ON EACH SIDE OF WATTLE. REAPPLY PAM AFTER EVERY RAINFALL EVENT THAT IS EQUAL TO OR EXCEEDS 0.50 IN.

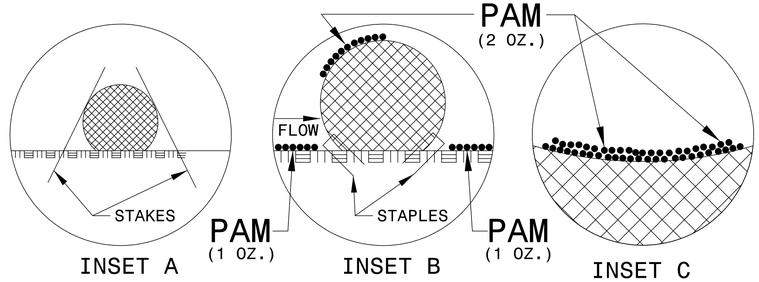

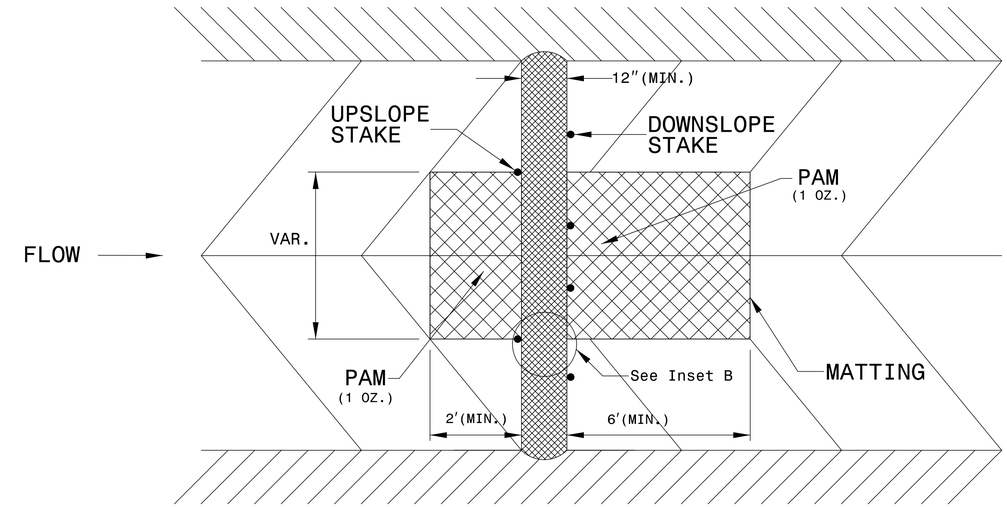

TOP VIEW

11:26:25 AM
\\Sacdata\projects\standard_details\ec_detail.dgn
$$$$USERNAME$$$$

PROJECT REFERENCE NO.	SHEET NO.
BD-5103U	EC-3
R/W SHEET NO.	

SILT FENCE COIR FIBER WATTLE BREAK DETAIL

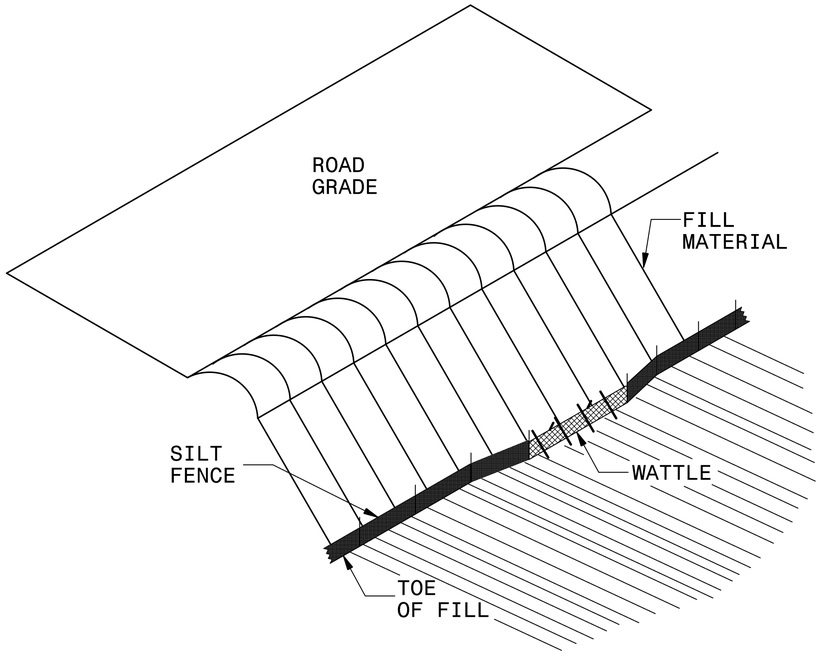

ISOMETRIC VIEW

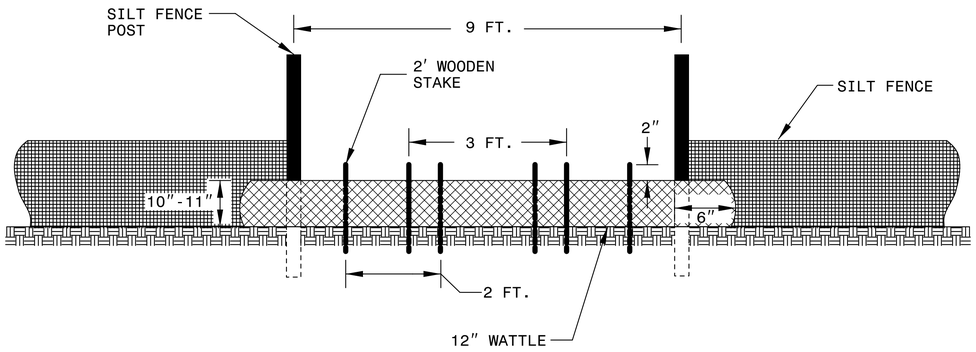

VIEW FROM SLOPE

NOTES:

USE MINIMUM 12 IN. DIAMETER COIR FIBER (COCONUT FIBER) WATTLE AND LENGTH OF 10 FT.

EXCAVATE A 1 TO 2 INCH TRENCH FOR WATTLE TO BE PLACED.

DO NOT PLACE WATTLE ON TOE OF SLOPE.

USE 2 FT. WOODEN STAKES WITH A 2 IN. BY 2 IN. NOMINAL CROSS SECTION.

INSTALL A MINIMUM OF 2 UPSLOPE STAKES AND 4 DOWNSLOPE STAKES AT AN ANGLE TO WEDGE WATTLE TO GROUND.

PROVIDE STAPLES MADE OF 0.125 IN. DIAMETER STEEL WIRE FORMED INTO A U SHAPE NOT LESS THAN 12″ IN LENGTH.

INSTALL STAPLES APPROXIMATELY EVERY 1 LINEAR FOOT ON BOTH SIDES OF WATTLE AND AT EACH END TO SECURE IT TO THE SOIL.

WATTLE INSTALLATION CAN BE ON OUTSIDE OF THE SILT FENCE AS DIRECTED.

INSTALL TEMPORARY SILT FENCE IN ACCORDANCE WITH SECTION 1605 OF THE STANDARD SPECIFICATIONS.

INSET A

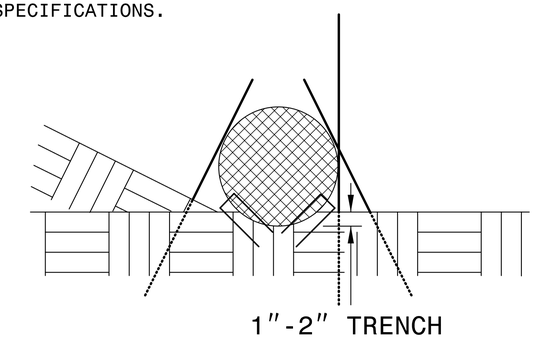

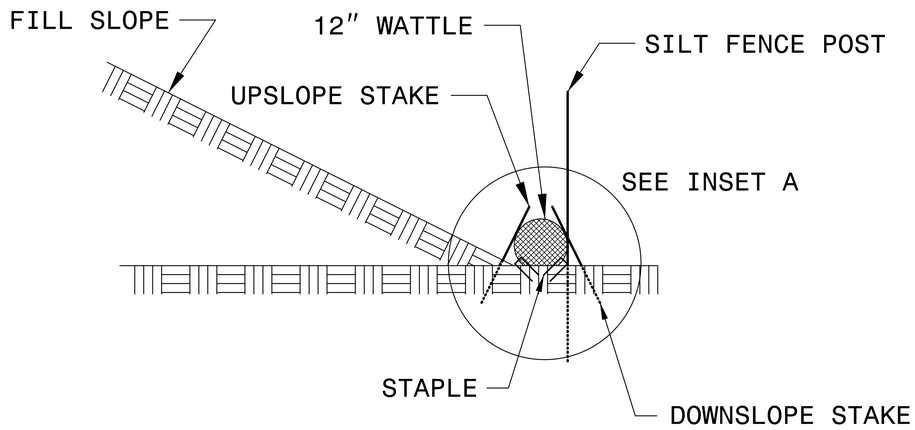

SIDE VIEW

PROJECT REFERENCE NO.	SHEET NO.
BD-5103U	EC-4
R/W SHEET NO.	

COIR FIBER WATTLE BARRIER DETAIL

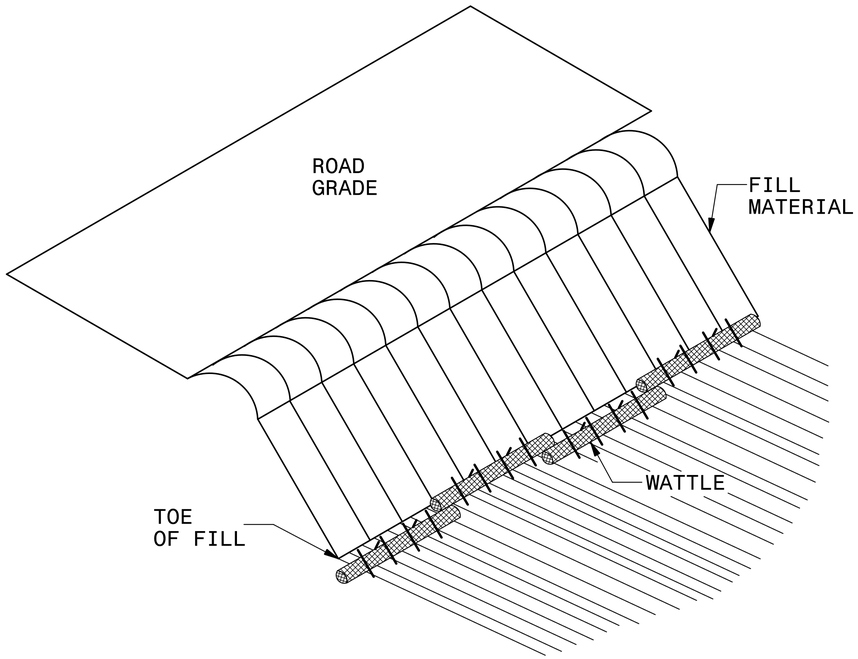

ISOMETRIC VIEW

NOTES:

USE MINIMUM 12 IN. DIAMETER COIR FIBER (COCONUT) WATTLE AND LENGTH OF 10 FT.

EXCAVATE A 1 TO 2 INCH TRENCH FOR WATTLE TO BE PLACED.

DO NOT PLACE WATTLES ON TOE OF SLOPE.

USE 2 FT. WOODEN STAKES WITH A 2 IN. BY 2 IN. NOMINAL CROSS SECTION.

INSTALL A MINIMUM OF 2 UPSLOPE STAKES AND 4 DOWNSLOPE STAKES AT AN ANGLE TO WEDGE WATTLE TO GROUND.

PROVIDE STAPLES MADE OF 0.125 IN. DIAMETER STEEL WIRE FORMED INTO A U SHAPE NOT LESS THAN 12″ IN LENGTH.

INSTALL STAPLES APPROXIMATELY EVERY 1 LINEAR FOOT ON BOTH SIDES OF WATTLE AND AT EACH END TO SECURE IT TO THE SOIL.

FOR BREAKS ALONG LARGE SLOPES, USE MAXIMUM SPACING OF 20 FT.

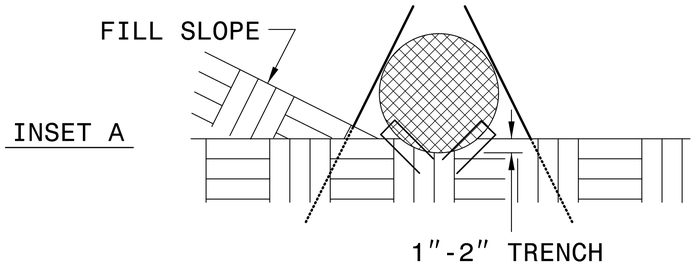

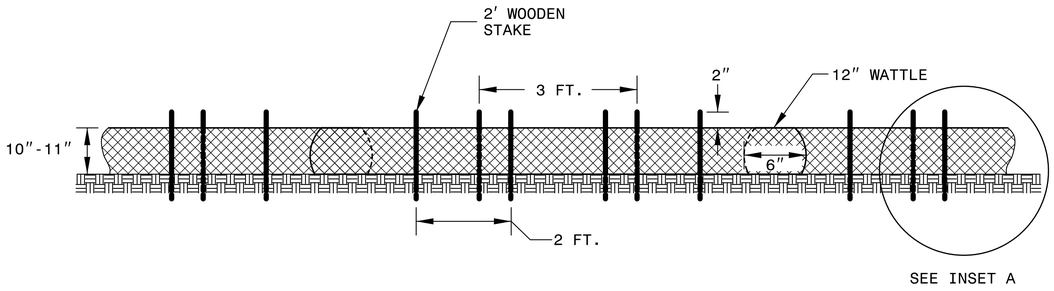

FRONT VIEW

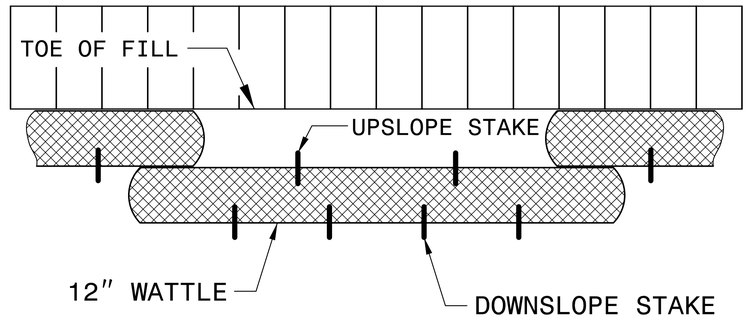

TOP VIEW

PROJECT REFERENCE NO.	SHEET NO.
BD-5103U	EC-5

DIVISION OF HIGHWAYS
STATE OF NORTH CAROLINA

SOIL STABILIZATION TIMEFRAMES

SITE DESCRIPTION	STABILIZATION TIME	TIMEFRAME EXCEPTIONS
PERIMETER DIKES, SWALES, DITCHES AND SLOPES	7 DAYS	NONE
HIGH QUALITY WATER (HQW) ZONES	7 DAYS	NONE
SLOPES STEEPER THAN 3:1	7 DAYS	IF SLOPES ARE 10' OR LESS IN LENGTH AND ARE NOT STEEPER THAN 2:1, 14 DAYS ARE ALLOWED.
SLOPES 3:1 OR FLATTER	14 DAYS	7 DAYS FOR SLOPES GREATER THAN 50' IN LENGTH.
ALL OTHER AREAS WITH SLOPES FLATTER THAN 4:1	14 DAYS	NONE, EXCEPT FOR PERIMETERS AND HQW ZONES.

PLAN

HNTB NORTH CAROLINA, P.C.
343 E. Six Forks Road, Suite 200
Raleigh, North Carolina 27609
NC License No: C-1554

PROJECT REFERENCE NO.	SHEET NO.
BD-5103U	EC-6
R/W SHEET NO.	

PHILLIP E. ROGERS, P.E.
EROSION CONTROL
LEVEL III-A
CERTIFICATION #330

REVISIONS

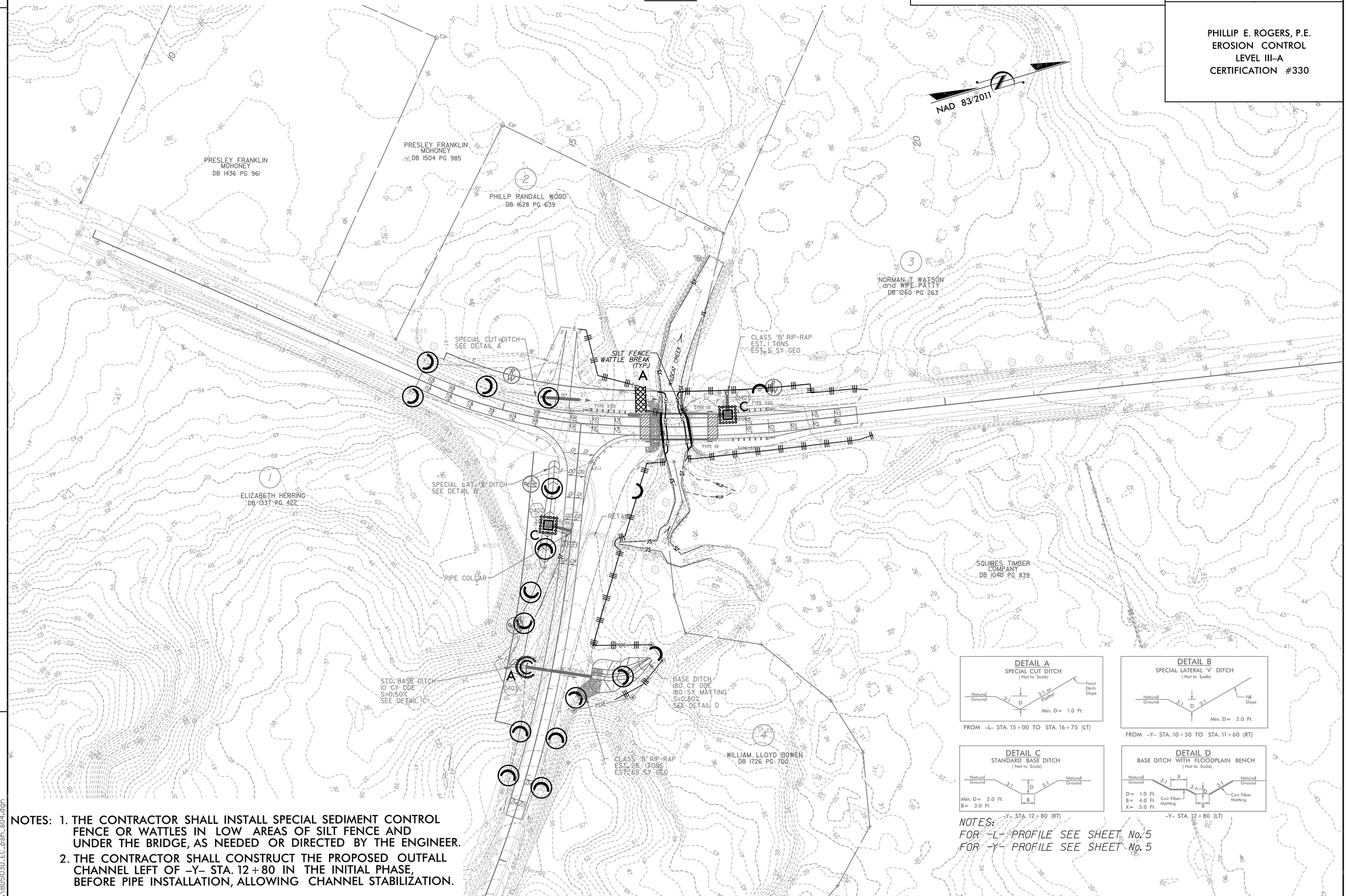

NOTES:
FOR -L- PROFILE SEE SHEET No. 5
FOR -Y- PROFILE SEE SHEET No. 5

NOTES:
1. THE CONTRACTOR SHALL INSTALL SPECIAL SEDIMENT CONTROL FENCE OR WATTLES IN LOW AREAS OF SILT FENCE AND UNDER THE BRIDGE, AS NEEDED OR DIRECTED BY THE ENGINEER.
2. THE CONTRACTOR SHALL CONSTRUCT THE PROPOSED OUTFALL CHANNEL LEFT OF -Y- STA. 12+80 IN THE INITIAL PHASE, BEFORE PIPE INSTALLATION, ALLOWING CHANNEL STABILIZATION.

12/3/2013
4:58:33 PM
...\BD5103U_EC_psh_s04.dgn

02/03/98

PROJ. REFERENCE NO.	SHEET NO.	TOTAL SHEETS
BD-5103U	X-1	7

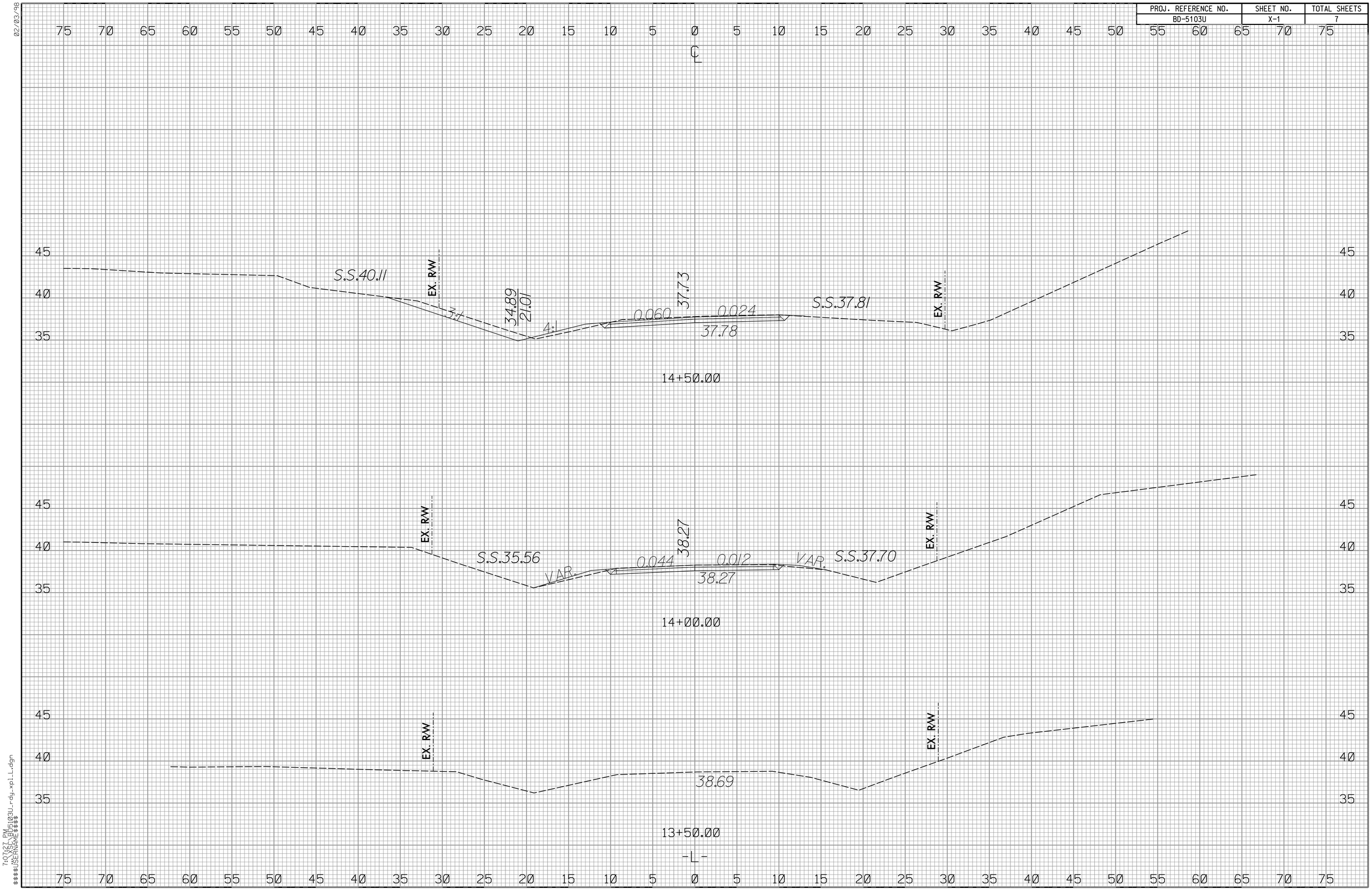

7:07:27 PM
X:\...\BD5103U_rdy_xpl_L.dgn
$$$$USERNAME$$$$

PROJ. REFERENCE NO.	SHEET NO.	TOTAL SHEETS
BD-5103U	X-2	7

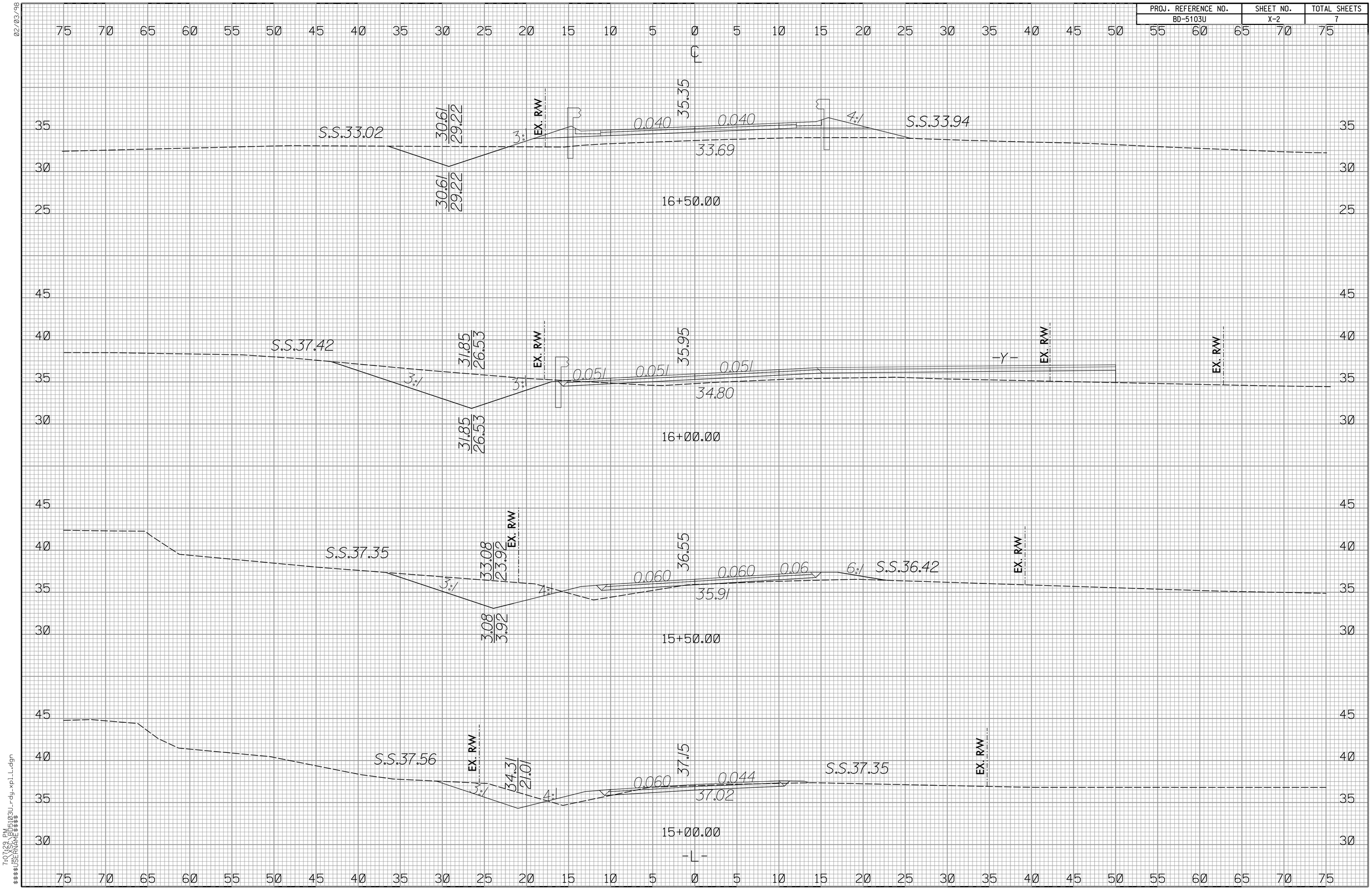

02/03/98

7:07:29 PM
$$$$USERNAME$$$$
$$$$ DGN: BD5103U_rdy_xpl_L.dgn

PROJ. REFERENCE NO.	SHEET NO.	TOTAL SHEETS
BD-5103U	X-3	7

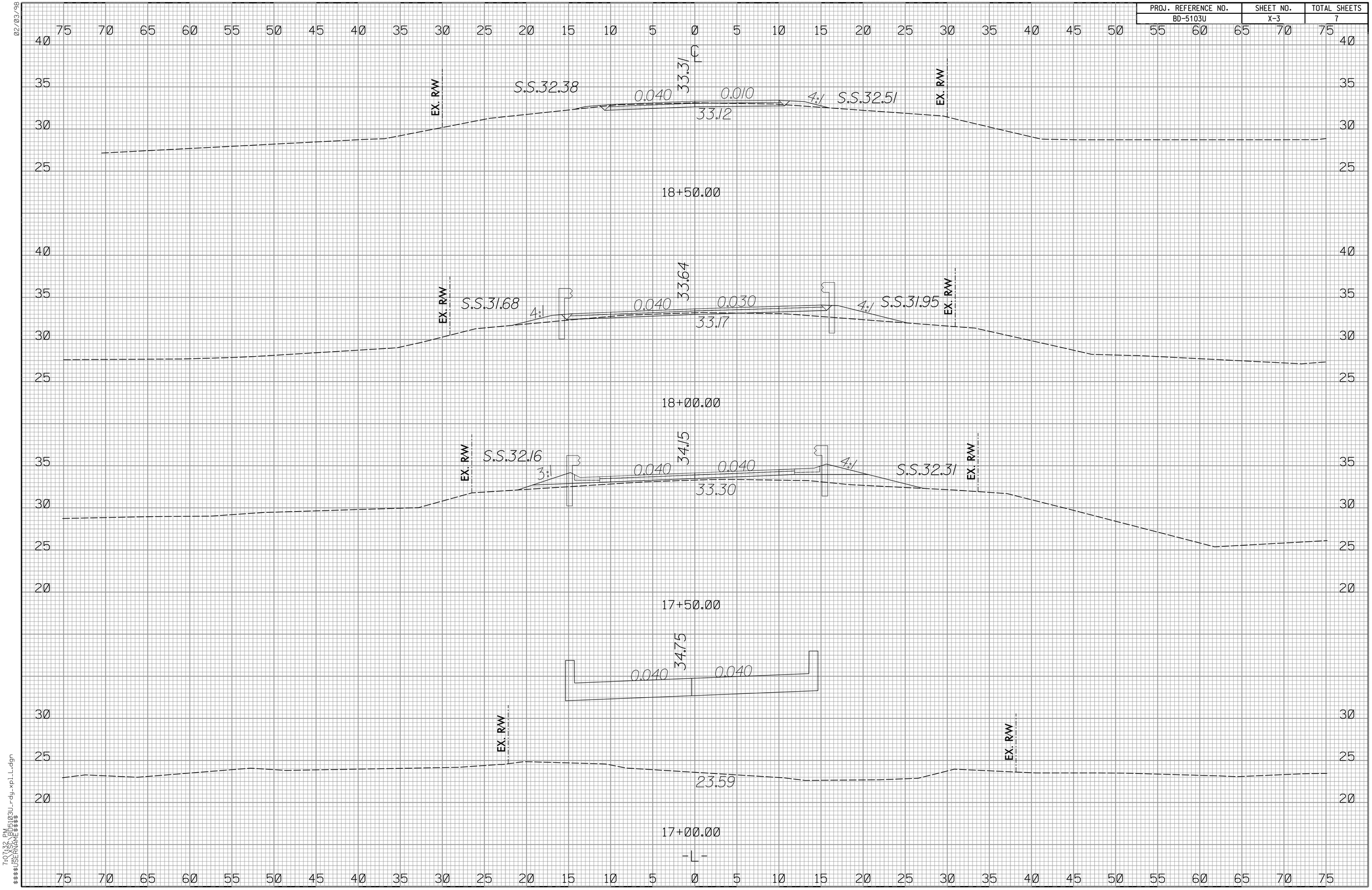

02/03/98

7:07:32 PM
...\XSC\BD5103U_rdy_xpl_L.dgn
$$$$USERNAME$$$$

PROJ. REFERENCE NO.	SHEET NO.	TOTAL SHEETS
BD-5103U	X-4	7

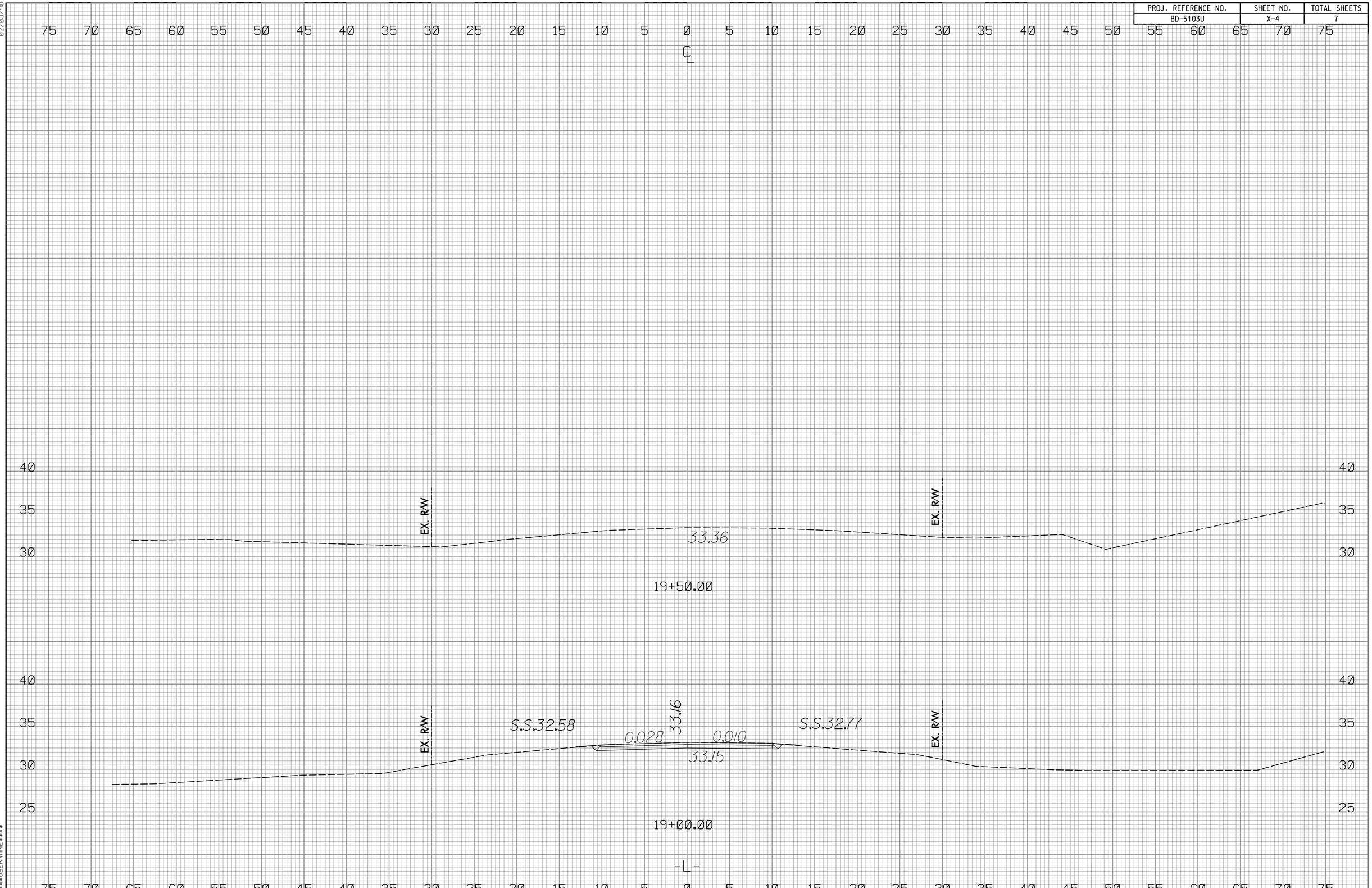

02/03/98

7:07:34 PM
...\XSC\BD5103U_rdy_xpl_L.dgn
$$$$USERNAME$$$$

PROJ. REFERENCE NO.	SHEET NO.	TOTAL SHEETS
BD-5103U	X-5	7

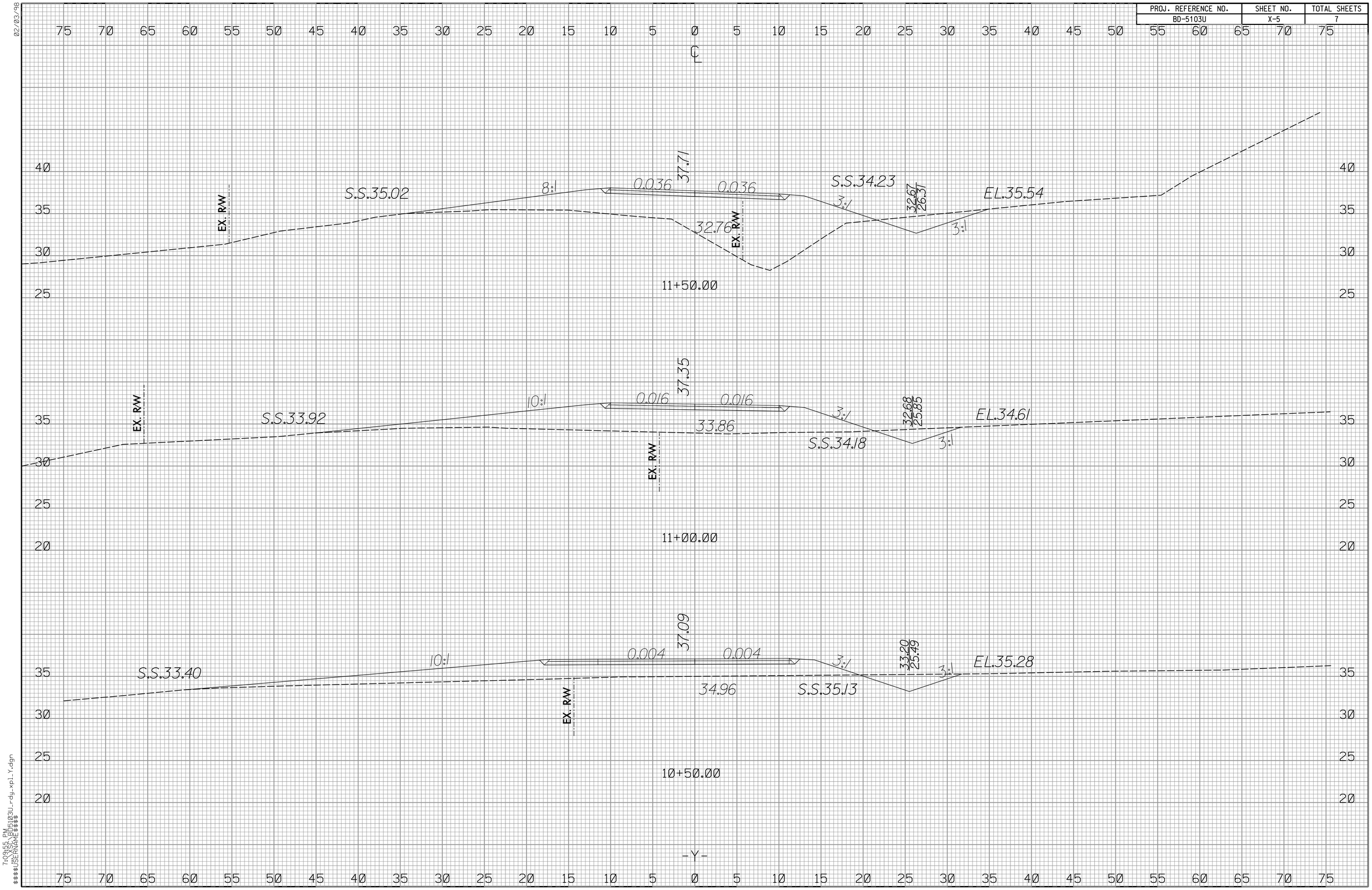

02/03/98

7:09:55 PM
...\X5C\BD5103U_rdy_xpl_Y.dgn
$$$$USERNAME$$$$

PROJ. REFERENCE NO.	SHEET NO.	TOTAL SHEETS
BD-5103U	X-6	7

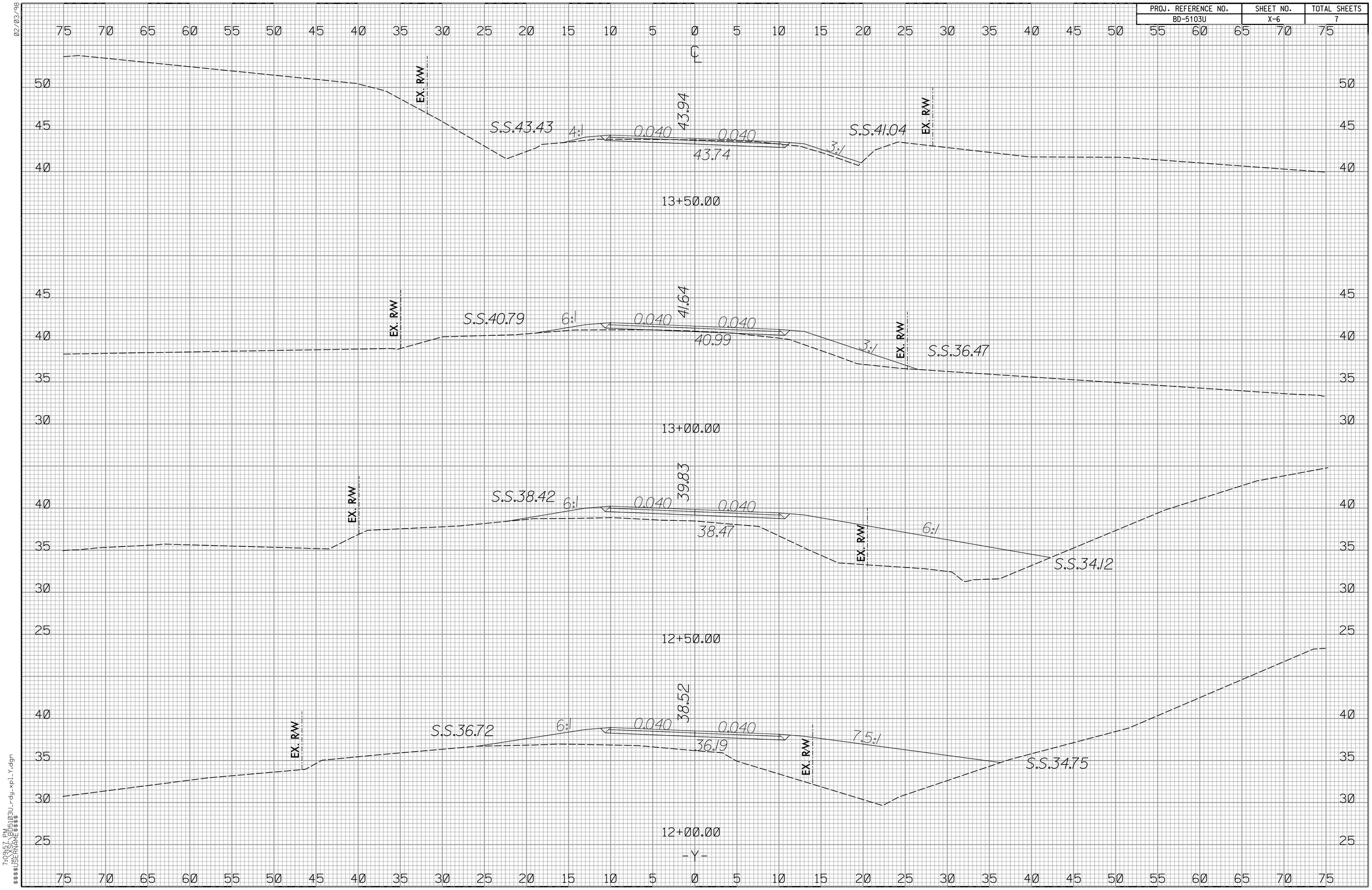

02/03/98

7:09:57 PM
...\XSC\BD5103U_rdy_xpl_Y.dgn
$$$$USERNAME$$$$

PROJ. REFERENCE NO.	SHEET NO.	TOTAL SHEETS
BD-5103U	X-7	7

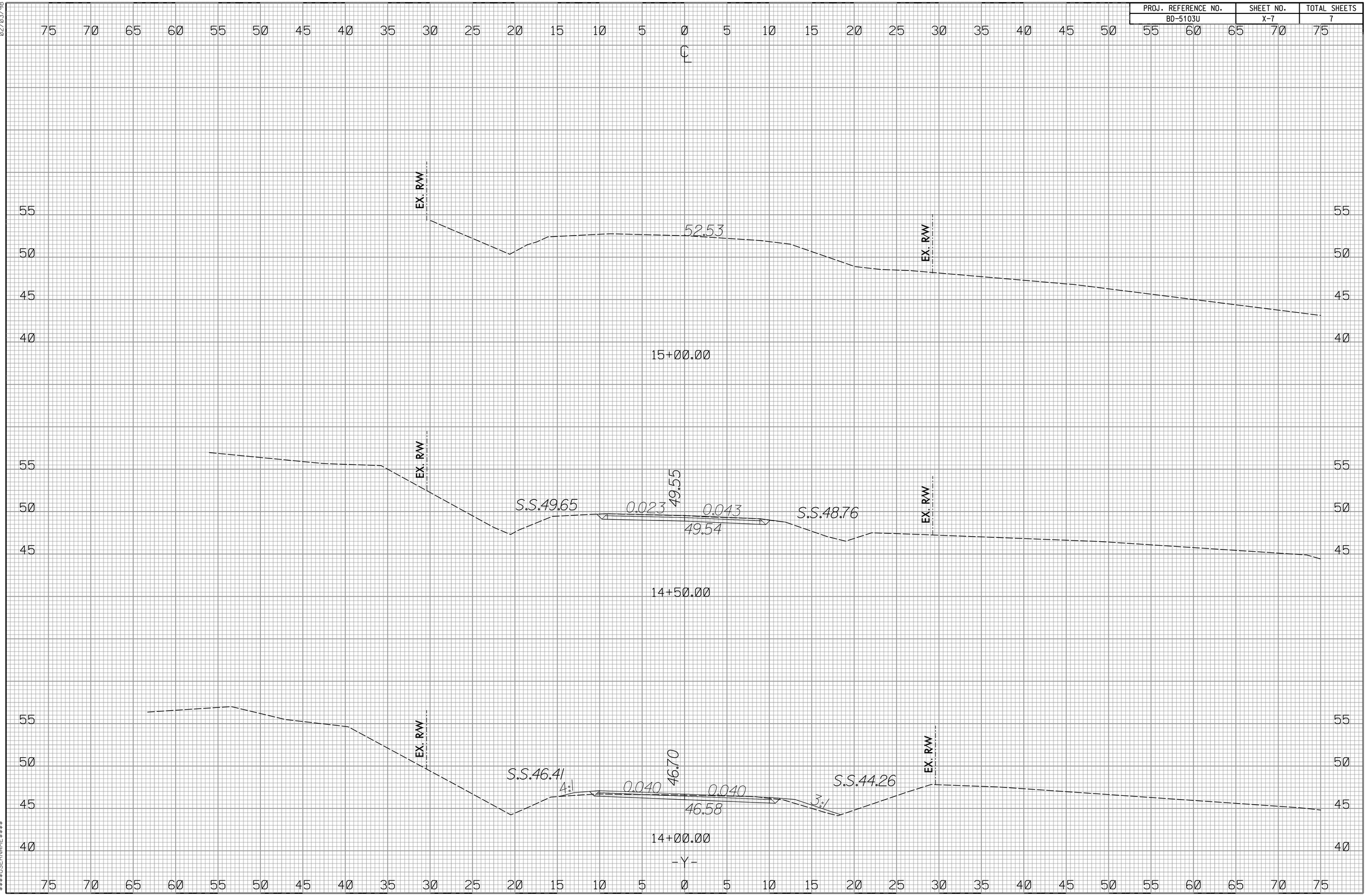

02/03/98

7:09:59 PM
...\XSC\BD5103U_rdy_xpl_Y.dgn
$$$$USERNAME$$$$

F.A. PROJECT NO. BRZ-1007(23)

FOR GENERAL NOTES, SEE SHEET 2.

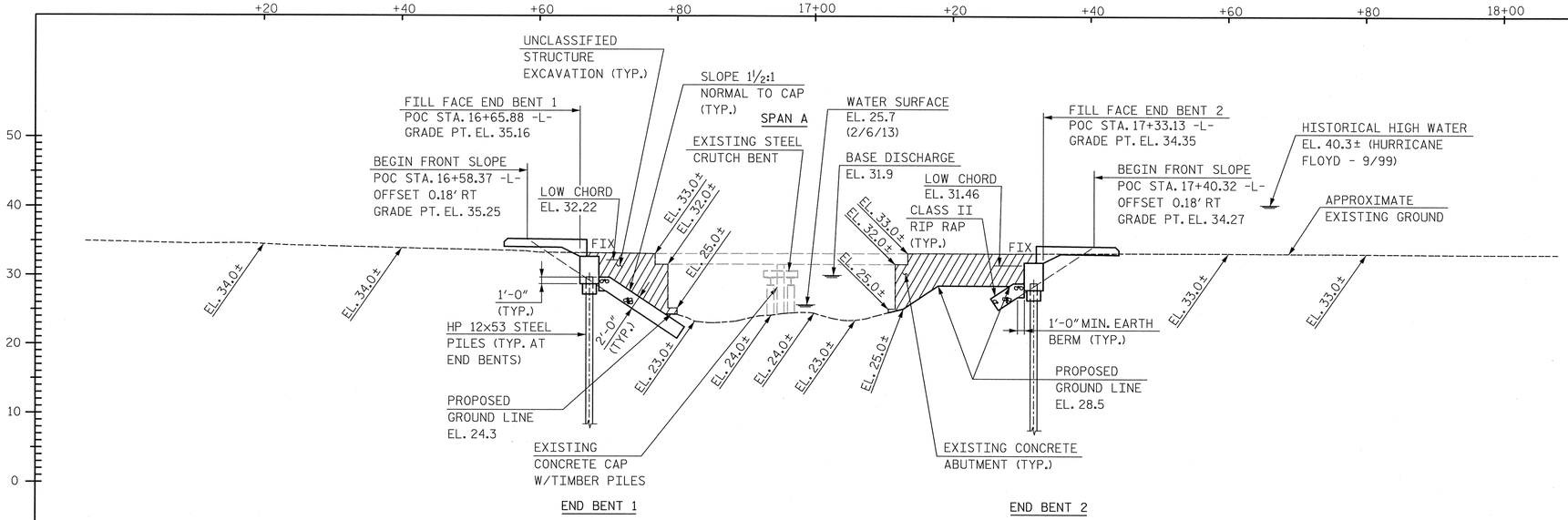

SECTION ALONG ℄ SURVEY -L-

NOTE: THE APPROXIMATE NATURAL GROUND ELEVATIONS ARE ALONG THE EDGE OF BRIDGE ON THE UPSTREAM SIDE.

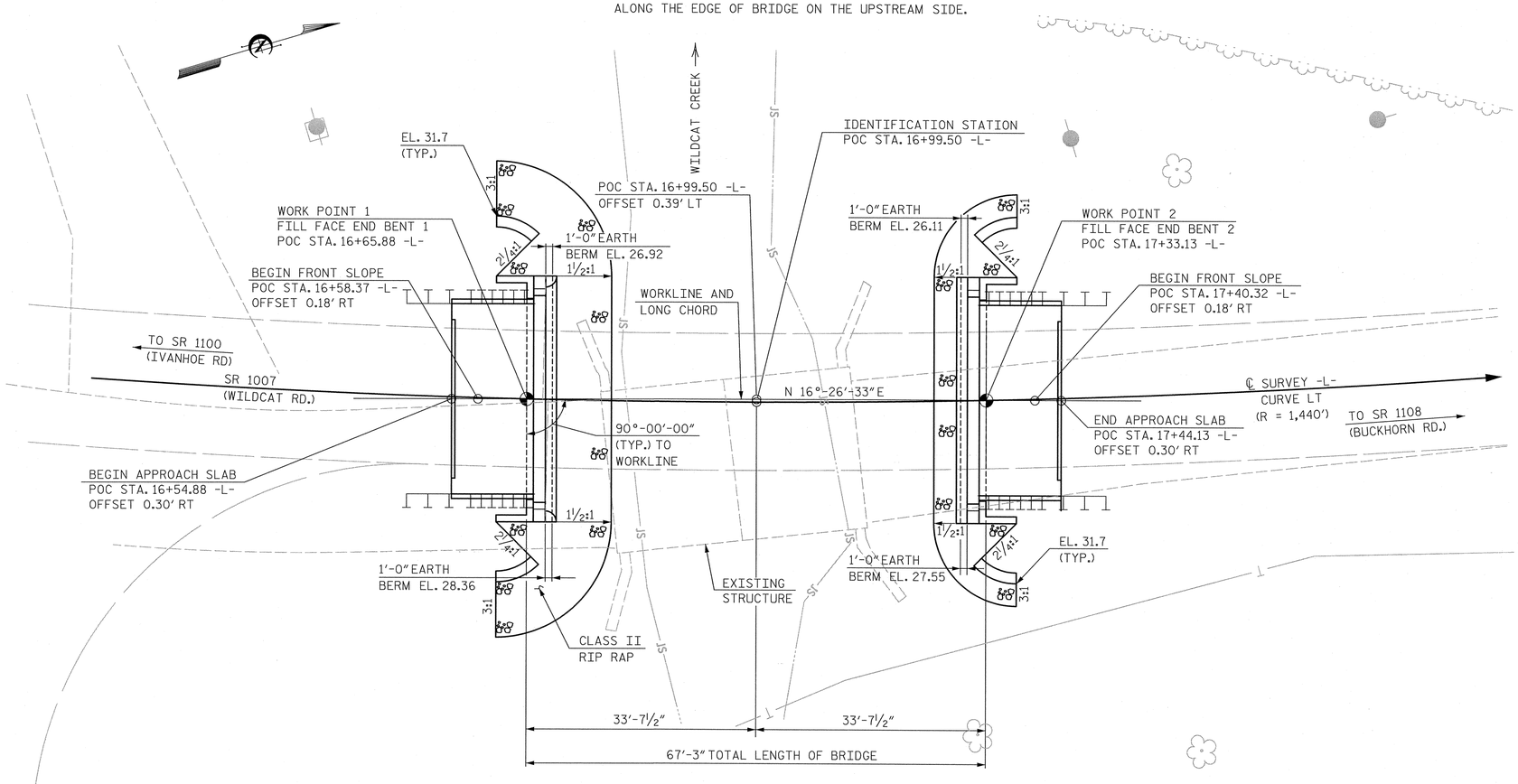

PLAN

NOTES: PILES NOT SHOWN FOR CLARITY.

WORKLINE FOR BRIDGE SHALL BE THE ROADWAY LONG CHORD BETWEEN FILL FACE WORK POINTS AND ITS EXTNSION.

BRIDGE HYDRAULIC DATA

DESIGN DISCHARGE	=	800 CFS
FREQUENCY OF DESIGN FLOOD	=	25 YR
DESIGN HIGH WATER ELEVATION	=	30.7 FT.
DRAINAGE AREA	=	6.9 SQ. MI.
BASIC DISCHARGE (Q100)	=	1,333 CFS
BASIC HIGH WATER ELEVATION	=	31.9 FT.

OVERTOPPING FLOOD DATA

OVERTOPPING DISCHARGE	=	2100 CFS
FREQUENCY OF OVERTOPPING FLOOD	=	500(+) YR
OVERTOPPING FLOOD ELEVATION	=	33.2 FT.

NOTE: OVERTOPPING OCCURS AT ROADWAY STA. 19+00.00

PI STA. = 14+50.00
ELEV = 37.75
V.C. = 100'

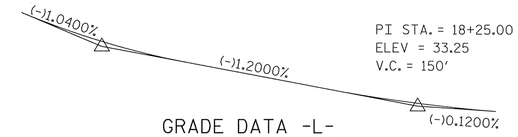

PI STA. = 18+25.00
ELEV = 33.25
V.C. = 150'

GRADE DATA -L-

CURVE DATA -L-

PI STA. 15+10.20
△ = 19° 53' 33.7" (LT)
D = 10° 42' 34.2"
L = 185.75'
T = 93.82'
R = 535.00'

PI STA. 17+27.10
△ = 9° 55' 11.6" (LT)
D = 3° 58' 43.9"
L = 249.31'
T = 124.97'
R = 1,440.00'

I HEREBY CERTIFY THESE PLANS ARE AS-BUILT PLANS

PROJECT NO. BD-5103U

SAMPSON COUNTY

STATION: 16+99.50 -L-

SHEET 1 OF 2 REPLACES BRIDGE NO. 0038

NORTH CAROLINA PROFESSIONAL SEAL 12916 ENGINEER PAUL J. BARBER 10/31/13

STATE OF NORTH CAROLINA
DEPARTMENT OF TRANSPORTATION
RALEIGH

GENERAL DRAWING FOR BRIDGE ON SR 1007 OVER WILDCAT CREEK BETWEEN SR 1100 AND SR 1108

HNTB HNTB NORTH CAROLINA, P.C.
NC License No. C-1554
343 E. Six Forks Rd., Suite 200, Raleigh, N.C. 27609

DRAWN BY J. BAYNE DATE 10/13
CHECKED BY P. BARBER DATE 10/13
DWG. NO. 1

REVISIONS						SHEET NO.
NO.	BY	DATE	NO.	BY	DATE	S-1
1			3			TOTAL SHEETS
2			4			13

BM - "BM1", 117.76' LT OF STA. 16+41.99 -L-, RR SPIKE IN BASE OF 18" PINE, ELEV 35.93

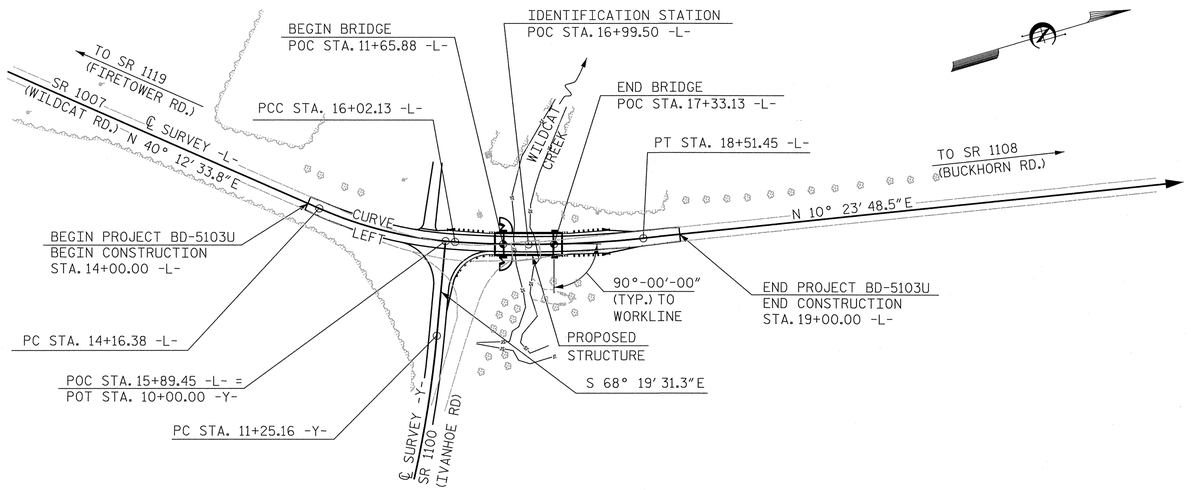

LOCATION SKETCH

FOR UTILITY INFORMATION, SEE UTILITY PLANS AND SPECIAL PROVISIONS.

FOUNDATION NOTES:

FOR PILES, SEE SECTION 450 OF THE STANDARD SPECIFICATIONS.

PILES AT END BENT NO. 1 AND END BENT NO. 2 ARE DESIGNED FOR A FACTORED RESISTANCE OF 94 TONS PER PILE.

DRIVE PILES AT END BENT NO. 1 AND END BENT NO. 2 TO A REQUIRED DRIVING RESISTANCE OF 160 TONS PER PILE.

TESTING PILES WITH THE PILE DRIVING ANALYZER (PDA) DURING DRIVING, RESTRIKING OR REDRIVING MAY BE REQUIRED. THE ENGINEER WILL DETERMINE THE NEED FOR PDA TESTING. FOR PDA TESTING, SEE SECTION 450 OF THE STANDARD SPECIFICATIONS AND FOR PILE DRIVING CRITERIA, SEE PILE DRIVING CRITERIA PROVISION.

TOTAL BILL OF MATERIAL

	REMOVAL OF EXISTING STRUCTURE AT STATION 16+99.50 -L-	PDA TESTING	UNCLASSIFIED STRUCTURE EXCAVATION AT STATION 16+99.50 -L-	CLASS A CONCRETE	BRIDGE APPROACH SLABS AT STATION 16+99.50 -L-	REINFORCING STEEL	HP 12x53 STEEL PILES		PILE REDRIVES	VERTICAL CONCRETE BARRIER RAIL	RIP RAP CLASS II (2'-0" THICK)	GEOTEXTILE FOR DRAINAGE	ELASTOMERIC BEARINGS	3'-0"x2'-0" PRESTRESSED CONCRETE CORED SLABS	
	LUMP SUM	EACH	LUMP SUM	CU. YDS.	LUMP SUM	LBS.	NO.	LIN. FT.	EACH	LIN. FT.	TONS	SQ. YDS.	LUMP SUM	NO.	LIN. FT.
SUPERSTRUCTURE	LUMP SUM	———	———	———	LUMP SUM	———	—	———	———	130.25	———	———	LUMP SUM	10	650
END BENT NO. 1	———	———	LUMP SUM	20.2	———	2,449	5	375	3	———	146	162	———	—	———
END BENT NO. 2	———	———	LUMP SUM	20.2	———	2,449	5	350	3	———	45	50	———	—	———
TOTAL	LUMP SUM	1	LUMP SUM	40.4	LUMP SUM	4,898	10	725	6	130.25	191	212	LUMP SUM	10	650

GENERAL NOTES

ASSUMED LIVE LOAD = HL-93 OR ALTERNATE LOADING.

THIS BRIDGE HAS BEEN DESIGNED IN ACCORDANCE WITH THE REQUIREMENTS OF THE AASHTO LRFD BRIDGE DESIGN SPECIFICATIONS.

THIS BRIDGE IS LOCATED IN SEISMIC ZONE 1.

THIS BRIDGE SHALL BE CONSTRUCTED USING TOP-DOWN CONSTRUCTION METHODS. THE USE OF A TEMPORARY CAUSEWAY OR WORK BRIDGE IS NOT PERMITTED. CONTRACTOR SHALL NOT PLACE OR OPERATE A CRANE ON SPAN A.

FOR OTHER DESIGN DATA AND GENERAL NOTES, SEE SHEET SN.

FOR SUBMITTAL OF WORKING DRAWINGS, SEE SPECIAL PROVISIONS.

FOR FALSEWORK AND FORMWORK, SEE SPECIAL PROVISIONS.

FOR CRANE SAFETY, SEE SPECIAL PROVISIONS.

FOR GROUT FOR STRUCTURES, SEE SPECIAL PROVISIONS.

THE CONTRACTOR SHALL PROVIDE INDEPENDENT ASSURANCE SAMPLES OF REINFORCING STEEL AS FOLLOWS: FOR PROJECTS REQUIRING UP TO 400 TONS OF REINFORCING STEEL, ONE 30 INCH SAMPLE OF EACH SIZE BAR USED, AND FOR PROJECTS REQUIRING OVER 400 TONS OF REINFORCING STEEL, TWO 30 INCH SAMPLES OF EACH SIZE BAR USED. THE BARS FROM WHICH THE SAMPLES ARE TAKEN MUST THEN BE SPLICED WITH REPLACEMENT BARS OF THE SIZE AND LENGTH OF THE SAMPLE PLUS A MINIMUM LAP SPLICE OF THIRTY BAR DIAMETERS. PAYMENT FOR THE SAMPLES OF REINFORCING STEEL SHALL BE CONSIDERED INCIDENTAL TO VARIOUS PAY ITEMS.

INASMUCH AS THE PAINT SYSTEM ON THE EXISTING STRUCTURAL STEEL CONTAINS LEAD, THE CONTRACTOR'S ATTENTION IS DIRECTED TO ARTICLE 107-1 OF THE STANDARD SPECIFICATIONS. ANY COSTS RESULTING FROM COMPLIANCE WITH APPLICABLE STATE OR FEDERAL REGULATIONS PERTAINING TO HANDLING OF MATERIALS CONTAINING LEAD BASED PAINT SHALL BE INCLUDED IN THE BID PRICE FOR "REMOVAL OF EXISTING STRUCTURE AT STATION 16+99.50 -L-.

THE MATERIAL SHOWN IN THE CROSS-HATCHED AREA SHALL BE EXCAVATED FOR A DISTANCE OF 18.0 FT EACH SIDE OF CENTERLINE ROADWAY AS DIRECTED BY THE ENGINEER. THIS WORK WILL BE PAID FOR AT THE CONTRACT LUMP SUM PRICE FOR UNCLASSIFIED STRUCTURE EXCAVATION. SEE SECTION 412 OF THE STANDARD SPECIFICATIONS.

THE EXISTING 2 SPAN STRUCTURE WITH SPAN LENGTHS OF 18'-3" AND 18'-5" WITH 12 LINES OF 12x16.5 I-BEAMS AT 2'-21#2" CENTERS SUPPORTING REINFORCED CONCRETE DECK WITH A 24'-0" CLEAR ROADWAY WIDTH ON REINFORCED CONCRETE ABUTMENTS AND REINFORCED CONCRETE BENT CAP WITH TIMBER PILES AND STEEL CRUTCH BENT SHALL BE REMOVED. IN ADDITION, ANY PILES REMAINING FROM PREVIOUS BRIDGE CONSTRUCTION OR MAINTENANCE OPERATIONS SHALL BE REMOVED AND INCLUDED IN THE LUMP SUM PAY ITEM FOR "REMOVAL OF EXISTING STRUCTURE AT STATION 16+99.50 -L-".

THE SUBSTRUCTURE OF THE EXISTING BRIDGE INDICATED ON THE PLANS IS FROM THE BEST INFORMATION AVAILABLE. SINCE THIS INFORMATION IS SHOWN FOR THE CONVENIENCE OF THE CONTRACTOR, THE CONTRACTOR SHALL HAVE NO CLAIM WHATSOEVER AGAINST THE DEPARTMENT OF TRANSPORTATION FOR ANY DELAYS OR ADDITIONAL COST INCURRED BASED ON DIFFERENCES BETWEEN THE EXISTING BRIDGE SUBSTRUCTURE SHOWN ON THE PLANS AND THE ACTUAL CONDITIONS AT THE PROJECT SITE.

REMOVAL OF THE EXISTING BRIDGE SHALL BE PERFORMED SO AS NOT TO ALLOW DEBRIS TO FALL INTO THE WATER. THE CONTRACTOR SHALL REMOVE THE BRIDGE AND SUBMIT PLANS FOR DEMOLITION IN ACCORDANCE WITH ARTICLE 402-2 OF THE STANDARD SPECIFICATIONS.

THIS STRUCTURE HAS BEEN DESIGNED IN ACCORDANCE WITH "HEC 18 - EVALUATING SCOUR AT BRIDGES."

FOR EROSION CONTROL MEASURES SEE EROSION CONTROL PLANS.

ASPHALT WEARING SURFACE IS INCLUDED IN ROADWAY QUANTITY ON ROADWAY PLANS.

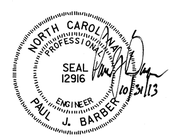

PROJECT NO. BD-5103U

SAMPSON COUNTY

STATION: 16+99.50 -L-

SHEET 2 OF 2

STATE OF NORTH CAROLINA
DEPARTMENT OF TRANSPORTATION
RALEIGH

GENERAL DRAWING FOR BRIDGE ON SR 1007 OVER WILDCAT CREEK BETWEEN SR 1100 AND SR 1108

HNTB NORTH CAROLINA, P.C.
NC License No. C-1554
343 E. Six Forks Rd., Suite 200, Raleigh, N.C. 27609

DRAWN BY J. BAYNE DATE 10/13
CHECKED BY P. BARBER DATE 10/13

DWG. NO. 2

REVISIONS						SHEET NO.
NO.	BY	DATE	NO.	BY	DATE	S-2
1			3			TOTAL SHEETS
2			4			13

LOAD AND RESISTANCE FACTOR RATING (LRFD) SUMMARY FOR PRESTRESSED CONCRETE GIRDERS

LEVEL		VEHICLE	WEIGHT (W) (TONS)	CONTROLLING LOAD RATING	MINIMUM RATING FACTORS (RF)	TONS = W X RF	STRENGTH I LIMIT STATE										SERVICE III LIMIT STATE						COMMENT NUMBER
								MOMENT					SHEAR					MOMENT						
							LIVELOAD FACTORS	DISTRIBUTION FACTORS (DF)	RATING FACTOR	SPAN	GIRDER LOCATION	DISTANCE FROM LEFT END OF SPAN (ft)	DISTRIBUTION FACTORS (DF)	RATING FACTOR	SPAN	GIRDER LOCATION	DISTANCE FROM LEFT END OF SPAN (ft)	LIVELOAD FACTORS	DISTRIBUTION FACTORS (DF)	RATING FACTOR	SPAN	GIRDER LOCATION	DISTANCE FROM LEFT END OF SPAN (ft)	
DESIGN LOAD RATING		HL-93(Inv)	N/A	1	1.018	--	1.75	0.274	1.05	65'	EL	32	0.513	1.2	65'	EL	6.4	0.80	0.274	**1.02**	65'	EL	**32**	
		HL-93(Opr)	N/A	--	1.358	--	1.35	0.274	1.36	65'	EL	32	0.513	1.56	65'	EL	6.4	N/A	--	--	--	--	--	
		HS-20(Inv)	36.000	2	1.306	47.014	1.75	0.274	1.34	65'	EL	32	0.513	1.48	65'	EL	6.4	0.80	0.274	**1.31**	65'	EL	**32**	
		HS-20(Opr)	36.000	--	1.742	62.706	1.35	0.274	1.74	65'	EL	32	0.513	1.92	65'	EL	6.4	N/A	--	--	--	--	--	
LEGAL LOAD RATING	SV	SNSH	13.500	--	2.868	38.725	1.4	0.274	3.69	65'	EL	32	0.513	4.33	65'	EL	6.4	0.80	0.274	2.87	65'	EL	32	
		SNGARBS2	20.000	--	2.171	43.424	1.4	0.274	2.79	65'	EL	32	0.513	3.11	65'	EL	6.4	0.80	0.274	2.17	65'	EL	32	
		SNAGRIS2	22.000	--	2.071	45.552	1.4	0.274	2.66	65'	EL	32	0.513	2.89	65'	EL	6.4	0.80	0.274	2.07	65'	EL	32	
		SNCOTTS3	27.250	--	1.428	38.924	1.4	0.274	1.84	65'	EL	32	0.513	2.17	65'	EL	6.4	0.80	0.274	1.43	65'	EL	32	
		SNAGGRS4	34.925	--	1.206	42.136	1.4	0.274	1.55	65'	EL	32	0.513	1.81	65'	EL	6.4	0.80	0.274	1.21	65'	EL	32	
		SNS5A	35.550	--	1.179	41.911	1.4	0.274	1.52	65'	EL	32	0.513	1.85	65'	EL	6.4	0.80	0.274	1.18	65'	EL	32	
		SNS6A	39.950	--	1.087	43.43	1.4	0.274	1.4	65'	EL	32	0.513	1.69	65'	EL	6.4	0.80	0.274	1.09	65'	EL	32	
		SNS7B	42.000	--	1.035	43.489	1.4	0.274	1.33	65'	EL	32	0.513	1.67	65'	EL	6.4	0.80	0.274	1.04	65'	EL	32	
	TTST	TNAGRIT3	33.000	--	1.327	43.8	1.4	0.274	1.71	65'	EL	32	0.513	2.01	65'	EL	6.4	0.80	0.274	1.33	65'	EL	32	
		TNT4A	33.075	--	1.335	44.142	1.4	0.274	1.72	65'	EL	32	0.513	1.95	65'	EL	6.4	0.80	0.274	1.33	65'	EL	32	
		TNT6A	41.600	--	1.096	45.613	1.4	0.274	1.41	65'	EL	32	0.513	1.8	65'	EL	6.4	0.80	0.274	1.10	65'	EL	32	
		TNT7A	42.000	--	1.105	46.4	1.4	0.274	1.42	65'	EL	32	0.513	1.74	65'	EL	6.4	0.80	0.274	1.10	65'	EL	32	
		TNT7B	42.000	--	1.15	48.298	1.4	0.274	1.48	65'	EL	32	0.513	1.62	65'	EL	6.4	0.80	0.274	1.15	65'	EL	32	
		TNAGRIT4	43.000	--	1.089	46.815	1.4	0.274	1.4	65'	EL	32	0.513	1.57	65'	EL	6.4	0.80	0.274	1.09	65'	EL	32	
		TNAGT5A	45.000	--	1.024	46.084	1.4	0.274	1.32	65'	EL	32	0.513	1.57	65'	EL	6.4	0.80	0.274	1.02	65'	EL	32	
		TNAGT5B	45.000	3	1.01	45.431	1.4	0.274	1.3	65'	EL	32	0.513	1.49	65'	EL	6.4	0.80	0.274	**1.01**	65'	EL	**32**	

LOAD FACTORS:

DESIGN LOAD RATING FACTORS	LIMIT STATE	γ_{DC}	γ_{DW}
	STRENGTH I	1.25	1.50
	SERVICE III	1.00	1.00

NOTES:

MINIMUM RATING FACTORS ARE BASED ON THE STRENGTH I AND SERVICE III LIMIT STATES.

ALLOWABLE STRESSES FOR SERVICE III LIMIT STATE ARE AS REQUIRED FOR DESIGN.

COMMENTS:

1.
2.
3.
4.

(#) CONTROLLING LOAD RATING

(1) DESIGN LOAD RATING (HL-93)

(2) DESIGN LOAD RATING (HS-20)

(3) LEGAL LOAD RATING **

** SEE CHART FOR VEHICLE TYPE

GIRDER LOCATION

I - INTERIOR GIRDER
EL - EXTERIOR LEFT GIRDER
ER - EXTERIOR RIGHT GIRDER

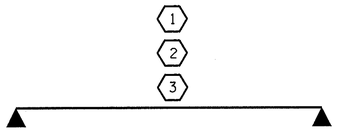

LRFR SUMMARY

FOR SPAN 'A'

PROJECT NO. BD-5103U

SAMPSON COUNTY

STATION: 16+99.50 -L-

STATE OF NORTH CAROLINA
DEPARTMENT OF TRANSPORTATION
RALEIGH

STANDARD

LRFR SUMMARY FOR 65' CORED SLAB UNIT 90° SKEW

(NON-INTERSTATE TRAFFIC)

NORTH CAROLINA PROFESSIONAL SEAL 025516 ENGINEER EMILY E. MURRAY

10/25/13

REVISIONS						SHEET NO.
NO.	BY:	DATE:	NO.	BY:	DATE:	S-3
1			3			TOTAL SHEETS
2			4			13

ASSEMBLED BY : K.W. EZZARD DATE : 7/3/13
CHECKED BY : PEGGY ADKINS DATE : 7/13/13

DRAWN BY : CVC 6/10
CHECKED BY : DNS 6/10

25-OCT-2013 08:47
S:\DPGI\Emily\BDProjects\BD-5103U\BD-5103U\BD-5103U_CS.dgn
cbpruett

STD. NO. 24LRFR1_90S_65L

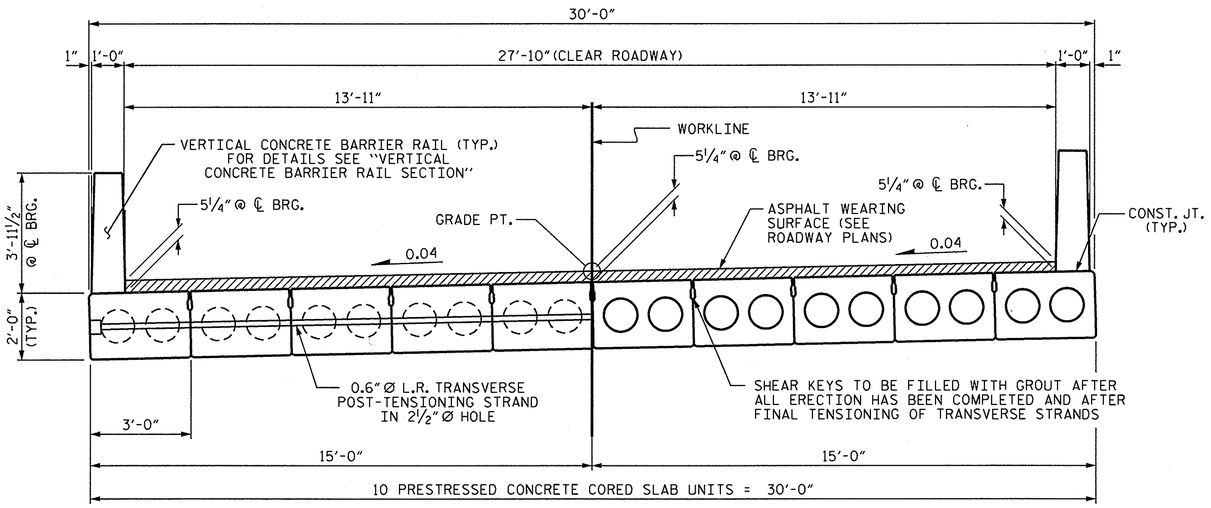

HALF SECTION
AT INTERMEDIATE DIAPHRAGMS

HALF SECTION
THROUGH VOIDS

TYPICAL SECTION

* - THE MAXIMUM BARRIER RAIL HEIGHT AND ASPHALT THICKNESS IS SHOWN. THE HEIGHT OF THE BARRIER RAIL AND ASPHALT THICKNESS VARIES WHILE THE TOP OF THE BARRIER RAIL FOLLOWS THE PROFILE OF THE GUTTERLINE. FOR RAIL HEIGHT DETAILS AND ASPHALT THICKNESS, SEE THE "VERTICAL CONCRETE BARRIER RAIL SECTION" DETAIL.

FIXED END

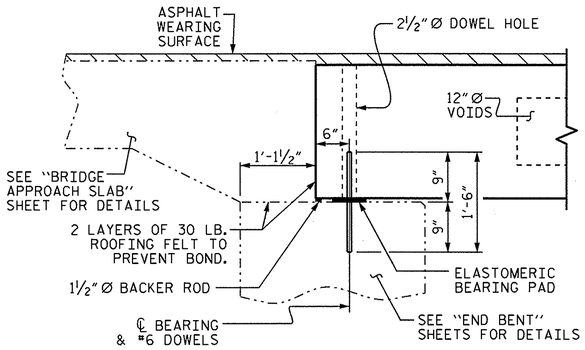

SECTION AT END BENT

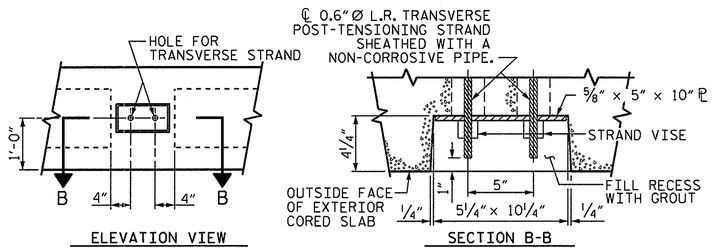

GROUTED RECESS AT END OF POST-TENSIONED STRAND CORED SLABS

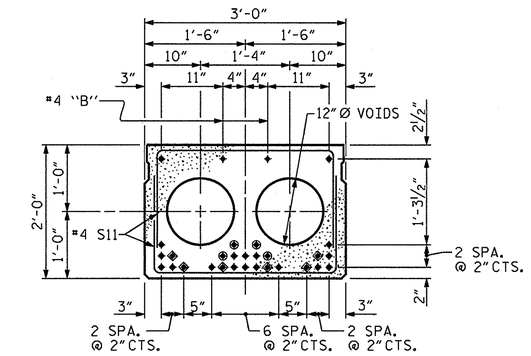

INTERIOR SLAB SECTION 65' UNIT
(24 STRANDS REQUIRED)

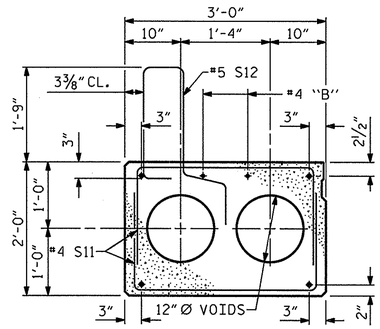

EXTERIOR SLAB SECTION
(FOR PRESTRESSED STRAND LAYOUT, SEE INTERIOR SLAB SECTION.)

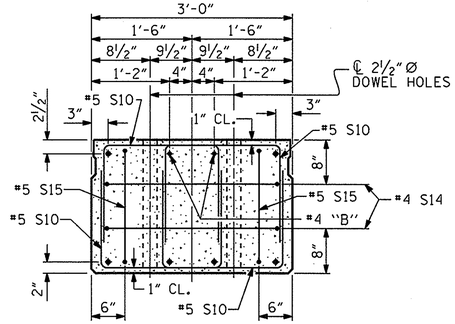

END ELEVATION
SHOWING PLACEMENT OF DOUBLE STIRRUPS AND LOCATION OF DOWEL HOLES. (STRAND LAYOUT NOT SHOWN.)
INTERIOR SLAB UNIT SHOWN-EXTERIOR SLAB UNIT SIMILAR EXCEPT SHEAR KEY LOCATION.

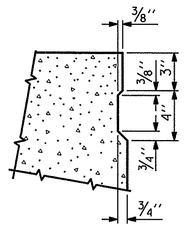

SHEAR KEY DETAIL
NOTE: OMIT SHEAR KEY ON OUTSIDE FACE OF EXTERIOR CORED SLABS.

0.6" Ø LOW RELAXATION STRAND LAYOUT

◈ BOND SHALL BE BROKEN ON THESE STRANDS FOR A DISTANCE OF 12'-0" FROM END OF CORED SLAB UNIT. SEE STANDARD SPECIFICATIONS, ARTICLE 1078-7.

◉ OPTIONAL FULL LENGTH DEBONDED STRANDS. THESE STRANDS ARE NOT REQUIRED. IF THE FABRICATOR CHOOSES TO INCLUDE THESE STRANDS IN THE CORED SLAB UNIT, THE STRANDS SHALL BE DEBONDED FOR THE FULL LENGTH OF THE UNIT AT NO ADDITIONAL COST. SEE STANDARD SPECIFICATIONS, ARTICLE 1078-7.

DEBONDING LEGEND

PROJECT NO. BD-5103U
SAMPSON COUNTY
STATION: 16+99.50 -L-

SHEET 1 OF 3

STATE OF NORTH CAROLINA
DEPARTMENT OF TRANSPORTATION
RALEIGH
STANDARD

3'-0" X 2'-0" PRESTRESSED CONCRETE CORED SLAB UNIT

REVISIONS						SHEET NO.
NO.	BY:	DATE:	NO.	BY:	DATE:	S-4
1			3			TOTAL SHEETS
2			4			13

ASSEMBLED BY : K.W. EZZARD	DATE : 7/3/13	
CHECKED BY : PEGGY ADKINS	DATE : 7/13/13	
DRAWN BY : MAA 6/10	REV. 12/11	MAA/AAC
CHECKED BY : MKT 7/10		

25-OCT-2013 08:47
S:\DPGI\Emily\BDProjects\BD-5103U\BD-5103U\BD-5103U_CS.dgn
cbpruett

STD. NO. 24PCS4_30_90S

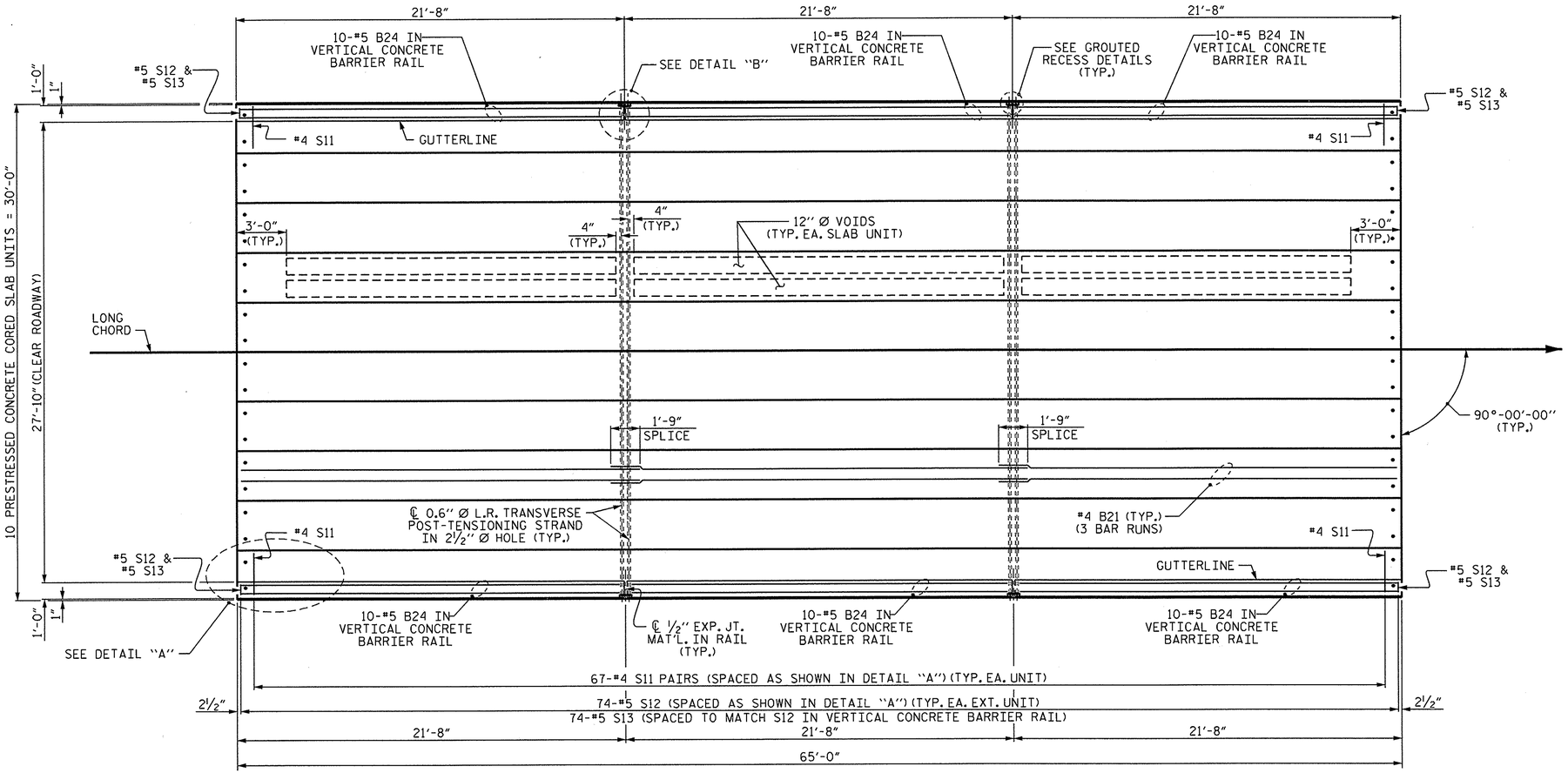

PLAN OF UNIT

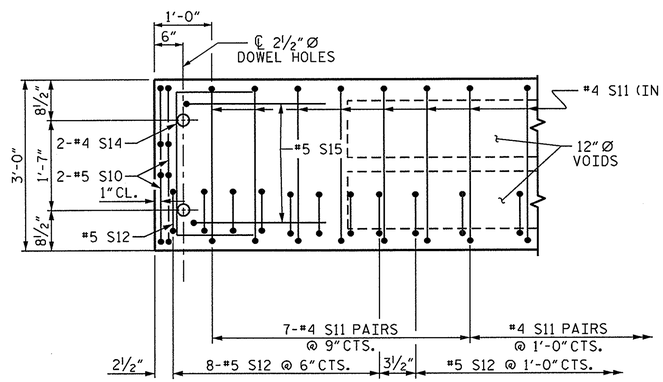

DETAIL "A"

NOTE: EXTERIOR UNIT SHOWN - INTERIOR UNIT SIMILAR EXCEPT OMIT #5 S12 BARS.

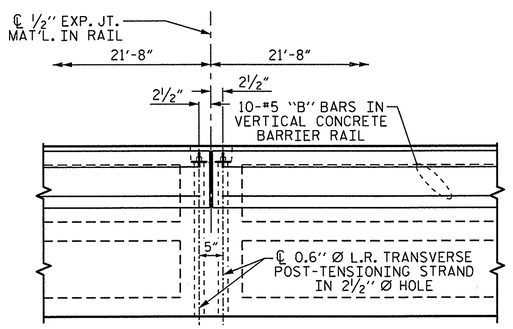

DETAIL "B"

#4 S11 BARS MAY BE SHIFTED AS NECESSARY TO MAINTAIN 1" CLEAR TO GROUTED RECESS AND 2½" Ø TRANSVERSE POST-TENSIONING STRAND HOLES

ASSEMBLED BY : K.W. EZZARD	DATE : 7/3/13
CHECKED BY : PEGGY ADKINS	DATE : 7/13/13
DRAWN BY : MAA 6/10	REV. 12/5/11 MAA/AAC
CHECKED BY : MKT 7/10	

25-OCT-2013 08:46
S:\DPG1\Emily\BDProjects\BD-5103U\BD-5103U\BD-5103U_CS.dgn
cbpruett

NORTH CAROLINA PROFESSIONAL SEAL 025516 ENGINEER EMILY E. MURRAY

10/25/13

PROJECT NO. BD-5103U

SAMPSON COUNTY

STATION: 16+99.50 -L-

SHEET 2 OF 3

STATE OF NORTH CAROLINA
DEPARTMENT OF TRANSPORTATION
RALEIGH

PLAN OF 65' UNIT 27'-10" CLEAR ROADWAY 90° SKEW

REVISIONS						SHEET NO.
NO.	BY:	DATE:	NO.	BY:	DATE:	S-5
1			3			TOTAL SHEETS
2			4			13

STD. NO. 24PCS_30_90S_65L

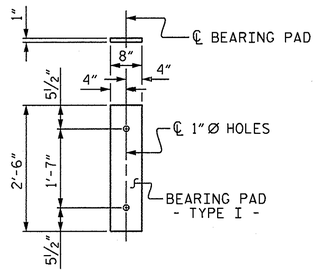

FIXED END
(TYPE I - 20 REQ'D)

ELASTOMERIC BEARING DETAILS

ELASTOMER IN ALL BEARINGS SHALL BE 60 DUROMETER HARDNESS.

GUTTERLINE ASPHALT THICKNESS & RAIL HEIGHT		
	ASPHALT OVERLAY THICKNESS @ MID-SPAN	RAIL HEIGHT @ MID-SPAN
65' UNITS	2⅜"	3'-8⅝"

CONCRETE RELEASE STRENGTH	
UNIT	PSI
65' UNITS	4800

DEAD LOAD DEFLECTION AND CAMBER	
	3'-0" x 2'-0"
65' CORED SLAB UNIT	0.6"Ø L.R. STRAND
CAMBER (SLAB ALONE IN PLACE)	3⅜" ↑
DEFLECTION DUE TO SUPERIMPOSED DEAD LOAD**	½" ↓
FINAL CAMBER	2⅞" ↑

** INCLUDES FUTURE WEARING SURFACE

CORED SLABS REQUIRED			
	NUMBER	LENGTH	TOTAL LENGTH
65' UNIT			
EXTERIOR C.S.	2	65'-0"	130'-0"
INTERIOR C.S.	8	65'-0"	520'-0"
TOTAL	10		650'-0"

BAR TYPES

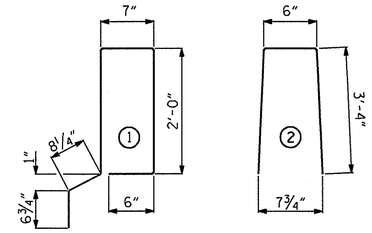

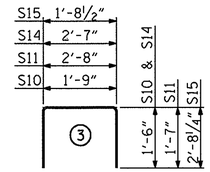

ALL BAR DIMENSIONS ARE OUT TO OUT

NOTES

ALL PRESTRESSING STRANDS SHALL BE 7-WIRE LOW RELAXATION GRADE 270 STRANDS AND SHALL CONFORM TO AASHTO M203 EXCEPT FOR SAMPLING REQUIREMENTS WHICH SHALL BE IN ACCORDANCE WITH THE STANDARD SPECIFICATIONS.

ALL REINFORCING STEEL CAST WITH THE CORED SLAB SECTIONS SHALL BE GRADE 60 AND SHALL BE INCLUDED IN THE UNIT PRICE BID FOR PRESTRESSED CONCRETE CORED SLABS.

RECESSES FOR TRANSVERSE STRANDS SHALL BE GROUTED AFTER THE TENSIONING OF THE STRANDS.

THE 2½"Ø DOWEL HOLES AT FIXED ENDS OF SLAB SECTIONS SHALL BE FILLED WITH NON-SHRINK GROUT.

THE BACKER RODS SHALL CONFORM TO THE REQUIREMENTS OF TYPE M BOND BREAKER. SEE SECTION 1028 OF THE STANDARD SPECIFICATIONS.

WHEN CORED SLABS ARE CAST, AN INTERNAL HOLD-DOWN SYSTEM SHALL BE EMPLOYED TO PREVENT VOIDS FROM RISING OR MOVING SIDEWAYS. AT LEAST SIX WEEKS PRIOR TO CASTING CORED SLABS, THE CONTRACTOR SHALL SUBMIT TO THE ENGINEER FOR REVIEW AND COMMENT, DETAILED DRAWINGS OF THE PROPOSED HOLD-DOWN SYSTEM. IN ADDITION TO STRUCTURAL DETAILS, LOCATION AND SPACING OF THE HOLD-DOWNS SHALL BE INDICATED.

THE TRANSFER OF LOAD FROM THE ANCHORAGES TO THE CORED SLAB UNIT SHALL BE DONE WHEN THE CONCRETE HAS REACHED A COMPRESSIVE STRENGTH OF NOT LESS THAN THE REQUIRED STRENGTH SHOWN IN THE "CONCRETE RELEASE STRENGTH" TABLE.

ALL REINFORCING STEEL IN VERTICAL CONCRETE BARRIER RAILS SHALL BE EPOXY COATED.

PRESTRESSING STRANDS SHALL BE CUT FLUSH WITH THE CORED SLAB UNIT ENDS.

APPLY EPOXY PROTECTIVE COATING TO CORED SLAB UNIT ENDS.

GROOVED CONTRACTION JOINTS, ½" IN DEPTH, SHALL BE TOOLED IN ALL EXPOSED FACES OF THE BARRIER RAIL AND IN ACCORDANCE WITH ARTICLE 825-10(B) OF THE STANDARD SPECIFICATIONS. A CONTRACTION JOINT SHALL BE LOCATED AT EACH THIRD POINT BETWEEN BARRIER RAIL EXPANSION JOINTS. ONLY ONE CONTRACTION JOINT IS REQUIRED AT MIDPOINT OF BARRIER RAIL SEGMENTS LESS THAN 20 FEET IN LENGTH AND NO CONTRACTION JOINTS ARE REQUIRED FOR THOSE SEGMENTS LESS THAN 10 FEET IN LENGTH.

TRANSVERSE POST TENSIONING OF THE CORED SLAB UNITS SHALL BE DONE IN ACCORDANCE WITH THE STANDARD SPECIFICATIONS.

MAINTAIN A SYMMETRIC TENSION FORCE BETWEEN EACH PAIR OF TRANSVERSE POST TENSIONING STRANDS IN THE DIAPHRAGM.

THE #4 S11 STIRRUPS MAY BE SHIFTED AS NECESSARY TO MAINTAIN 1" CLEAR TO THE GROUTED RECESS.

FOR GROUT FOR STRUCTURES, SEE SPECIAL PROVISIONS.

BILL OF MATERIAL FOR ONE 65' CORED SLAB UNIT

BAR	NUMBER	SIZE	TYPE	EXTERIOR UNIT LENGTH	EXTERIOR UNIT WEIGHT	INTERIOR UNIT LENGTH	INTERIOR UNIT WEIGHT
B21	6	#4	STR	22'-10"	92	22'-10"	92
S10	8	#5	3	4'-9"	40	4'-9"	40
S11	134	#4	3	5'-10"	522	5'-10"	522
*S12	74	#5	1	6'-4"	489		
S14	4	#4	3	5'-7"	15	5'-7"	15
S15	4	#5	3	7'-1"	30	7'-1"	30
REINFORCING STEEL			LBS.		699		699
*EPOXY COATED REINFORCING STEEL			LBS.		489		
6000 P.S.I. CONCRETE			CU. YDS.		11.0		11.0
0.6"Ø L.R. STRANDS			No.		24		24

BILL OF MATERIAL FOR VERTICAL CONCRETE BARRIER RAIL					
BAR	BARS PER PAIR OF EXTERIOR UNITS	TOTAL NO.	SIZE	LENGTH	WEIGHT
	65' UNIT				
*B24	60	60	#5	21'-3"	1330
*S13	148	148	#5	7'-2"	1106
*EPOXY COATED REINFORCING STEEL			LBS.		2436
CLASS AA CONCRETE			CU.YDS.		17.6
TOTAL VERTICAL CONCRETE BARRIER RAIL			LN. FT.		130.25

GRADE 270 STRANDS	
	0.6"Ø L.R.
AREA (SQUARE INCHES)	0.217
ULTIMATE STRENGTH (LBS. PER STRAND)	58,600
APPLIED PRESTRESS (LBS. PER STRAND)	43,950

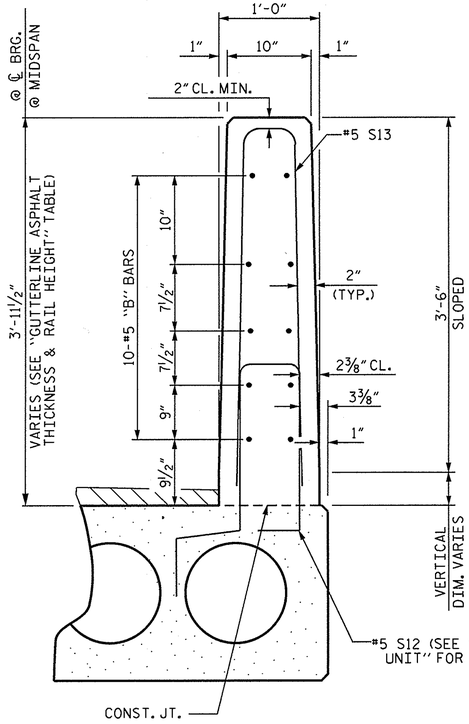

SECTION THRU RAIL

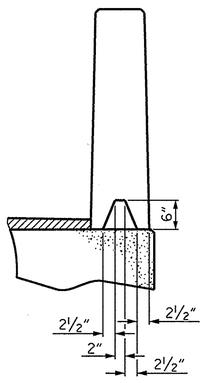

SECTION S-S
AT DAM IN OPEN JOINT
(THIS IS TO BE USED ONLY WHEN SLIP FORM IS USED)

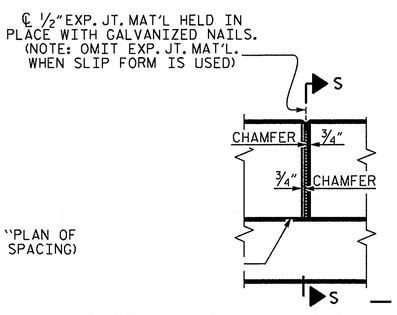

ELEVATION AT EXPANSION JOINTS

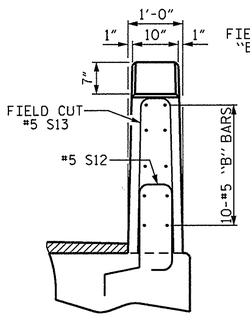

END VIEW

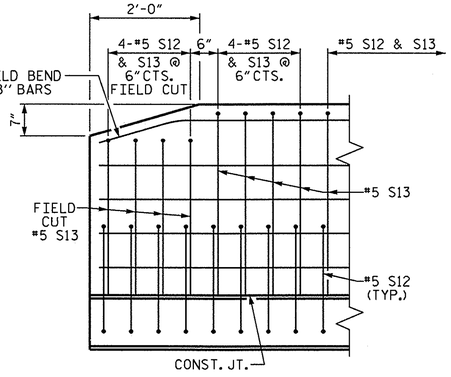

SIDE VIEW

VERTICAL CONCRETE BARRIER RAIL DETAILS

END OF RAIL DETAILS

ASSEMBLED BY : K.W. EZZARD DATE : 7/3/13
CHECKED BY : PEGGY ADKINS DATE : 7/13/13

DRAWN BY : MAA 6/10
CHECKED BY : MKT 7/10

REV. 12/11 MAA/AAC

NORTH CAROLINA PROFESSIONAL SEAL 025516 ENGINEER EMILY E. MURRAY
10/25/13

PROJECT NO. BD-5103U
SAMPSON COUNTY
STATION: 16+99.50 -L-

SHEET 3 OF 3

STATE OF NORTH CAROLINA
DEPARTMENT OF TRANSPORTATION
RALEIGH

STANDARD
3'-0" X 2'-0"
PRESTRESSED CONCRETE
CORED SLAB UNIT

REVISIONS						SHEET NO.
NO.	BY:	DATE:	NO.	BY:	DATE:	S-6
1			3			TOTAL SHEETS
2			4			13

25-OCT-2013 08:46
S:\DPGI\Emily\BDProjects\BD-5103U\BD-5103U\BD-5103U_CS.dgn
dbpruett

STD. NO. 24PCS3_30_90S

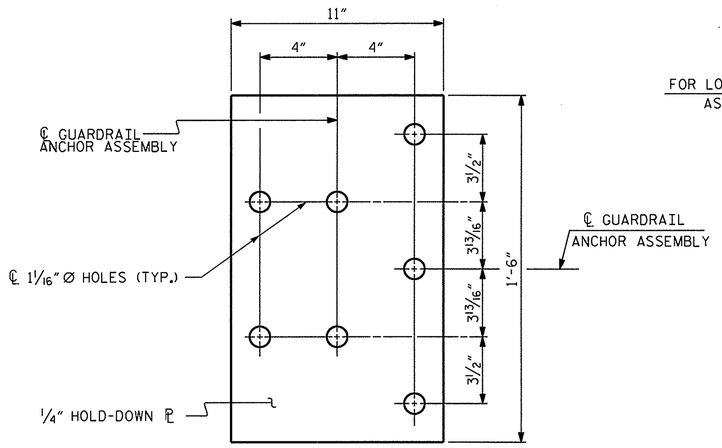

PLAN

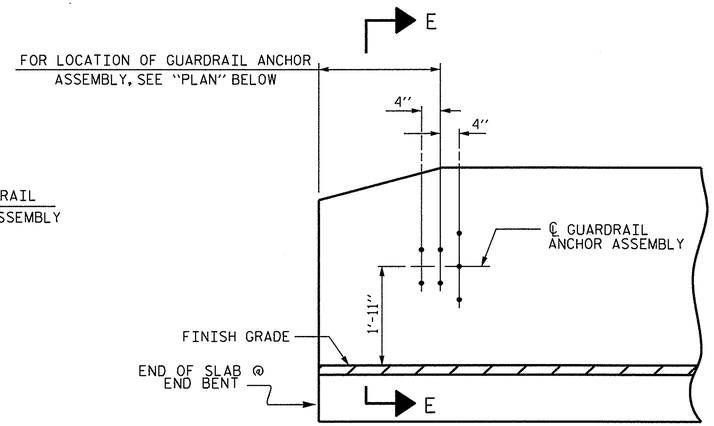

ELEVATION

NOTES

THE GUARDRAIL ANCHOR ASSEMBLY SHALL CONSIST OF A 1/4" HOLD DOWN PLATE AND 7 - 7/8" Ø BOLTS WITH NUTS AND WASHERS.

THE HOLD-DOWN PLATE SHALL CONFORM TO AASHTO M270 GRADE 36. AFTER FABRICATION, THE HOLD-DOWN PLATE SHALL BE HOT-DIP GALVANIZED IN ACCORDANCE WITH AASHTO M111.

BOLTS SHALL CONFORM TO THE REQUIREMENTS OF ASTM A307 AND NUTS SHALL CONFORM TO THE REQUIREMENTS OF AASHTO M291. BOLTS, NUTS AND WASHERS SHALL BE GALVANIZED. (AT THE CONTRACTOR'S OPTION, STAINLESS STEEL BOLTS, NUTS AND WASHERS MAY BE USED AS AN ALTERNATE FOR THE 7/8" Ø GALVANIZED BOLTS, NUTS AND WASHERS. THEY SHALL CONFORM TO OR EXCEED THE MECHANICAL REQUIREMENTS OF ASTM A307. THE USE OF THIS ALTERNATE SHALL BE APPROVED BY THE ENGINEER.)

THE GUARDRAIL ANCHOR ASSEMBLY IS REQUIRED AT ALL POINTS WHERE APPROACH GUARDRAIL IS TO BE ATTACHED TO THE END OF BARRIER RAIL. FOR POINTS OF ATTACHMENT, SEE SKETCH.

AFTER INSTALLATION, THE EXPOSED THREAD OF THE BOLT SHALL BE BURRED WITH A SHARP POINTED TOOL.

THE COST OF THE GUARDRAIL ANCHOR ASSEMBLY SHALL BE INCLUDED IN THE UNIT CONTRACT PRICE BID FOR VERTICAL CONCRETE BARRIER RAIL.

THE VERTICAL REINFORCING BARS MAY BE SHIFTED SLIGHTLY IN THE VERTICAL CONCRETE BARRIER RAIL TO CLEAR ASSEMBLY BOLTS.

THE 1 1/4" Ø HOLES SHALL BE FORMED OR DRILLED WITH A CORE BIT. IMPACT TOOLS WILL NOT BE PERMITTED. ANY CONCRETE DAMAGED BY THIS WORK SHALL BE REPAIRED TO THE SATISFACTION OF THE ENGINEER.

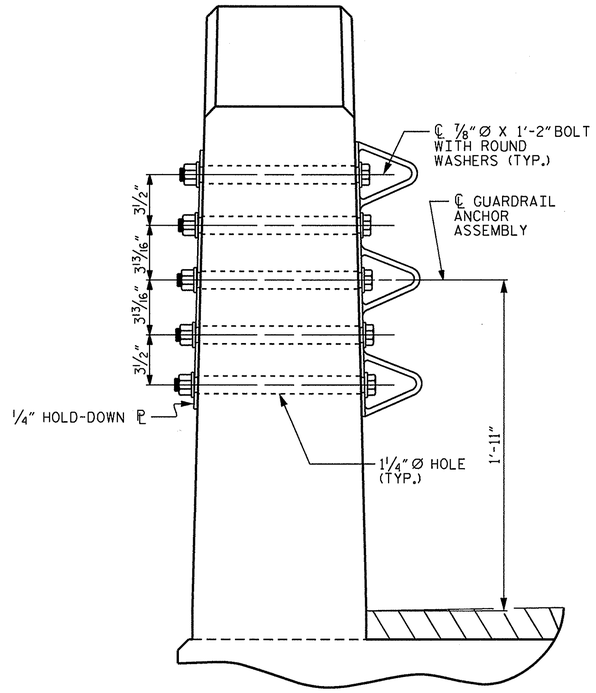

SECTION E-E

GUARDRAIL ANCHOR ASSEMBLY DETAILS

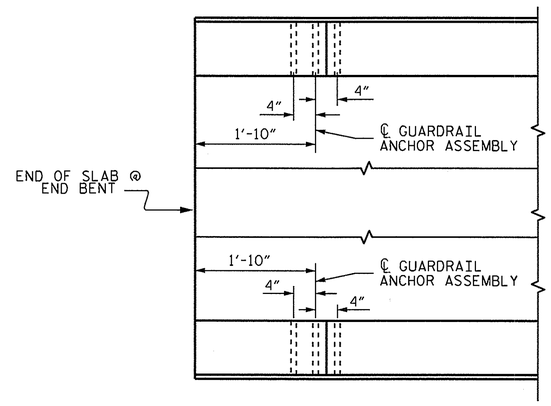

PLAN

LOCATION OF ANCHORS FOR GUARDRAIL

END BENT #1 SHOWN, END BENT #2 SIMILAR.

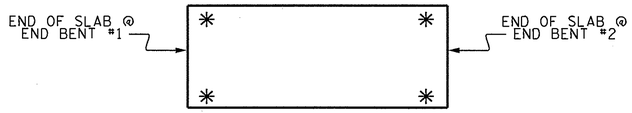

SKETCH SHOWING POINTS OF ATTACHMENT

✳ DENOTES GUARDRAIL ANCHOR ASSEMBLY

PROJECT NO. BD-5103U

SAMPSON COUNTY

STATION: 16+99.50 -L-

STATE OF NORTH CAROLINA
DEPARTMENT OF TRANSPORTATION
RALEIGH

STANDARD
GUARDRAIL ANCHORAGE FOR VERTICAL CONCRETE BARRIER RAIL

REVISIONS						SHEET NO.
NO.	BY:	DATE:	NO.	BY:	DATE:	S-7
1			3			TOTAL SHEETS
2			4			13

NORTH CAROLINA PROFESSIONAL SEAL 025516 ENGINEER EMILY E. MURRAY
10/25/13

ASSEMBLED BY : K.W. EZZARD	DATE : 7/3/13
CHECKED BY : PEGGY ADKINS	DATE : 7/13/13
DRAWN BY : MAA 5/10	REV. 10/1/11 MAA/GM
CHECKED BY : GM 5/10	REV. 12/5/11 MAA/GM
	REV. 6/13 MAA/GM

25-OCT-2013 08:45
S:\DPGI\Emily\BDProjects\BD-5103U\BD-5103U\BD-5103U_CS.dgn
cbpruett

(SHT 1) STD. NO. GRA3

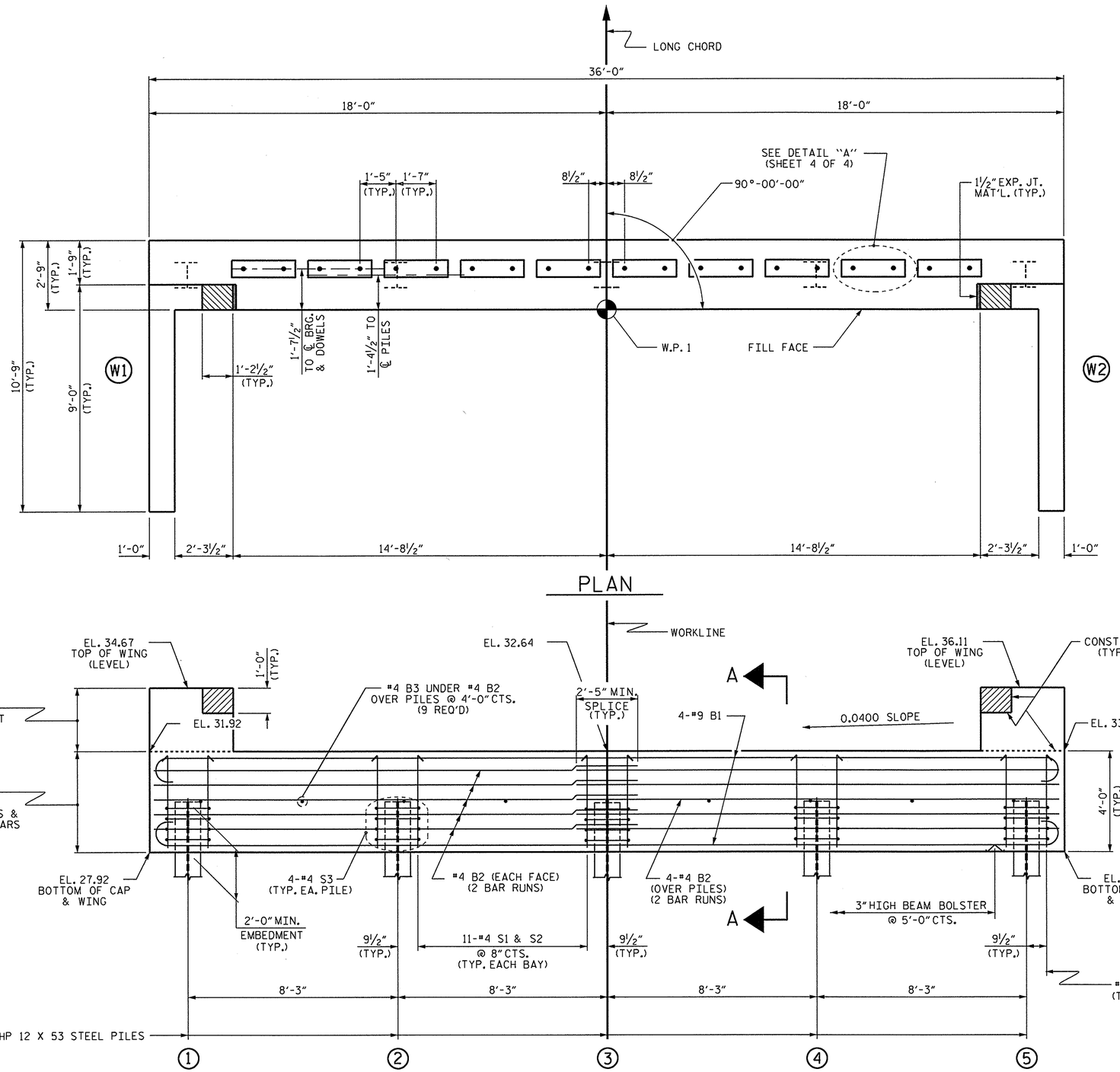

PLAN

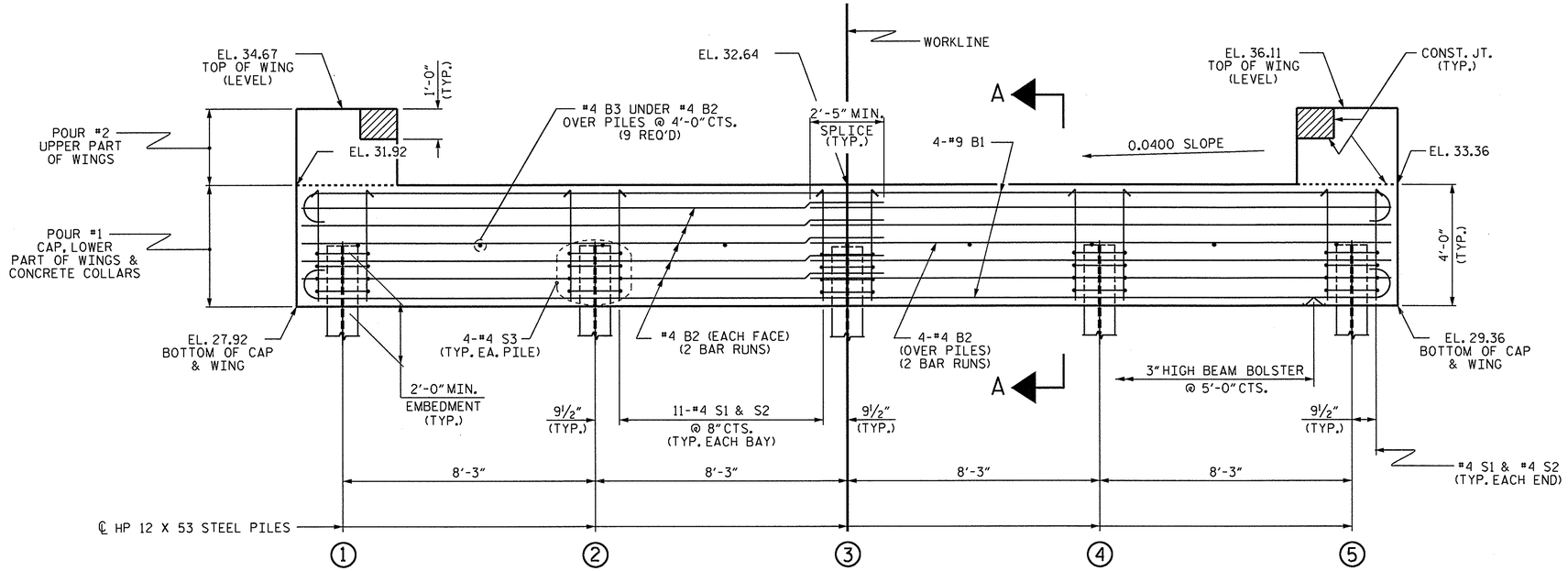

ELEVATION

WINGS NOT SHOWN FOR CLARITY.
FOR SECTION A-A, SEE SHEET 4 OF 4.
CONCRETE COLLARS FOR STEEL PILES NOT SHOWN IN PLAN AND ELEVATION VIEWS FOR CLARITY.
SEE "CORROSION PROTECTION FOR STEEL PILES DETAIL", SHEET 4 OF 4.

NOTES

STIRRUPS IN CAP MAY BE SHIFTED AS NECESSARY TO CLEAR DOWELS.

THE CONCRETE IN THE SHADED AREA OF THE WING SHALL BE POURED AFTER THE VERTICAL CONCRETE BARRIER RAIL IS CAST IF SLIP FORMING IS USED.

FOR PILE SPLICE DETAILS, SEE SHEET 4 OF 4.

FOR WING DETAILS, SEE SHEET 3 OF 4.

INSTALL THE 4" DIA. DRAIN PIPE THROUGH THE WING WALL AS REQUIRED FOR REINFORCED BRIDGE APPROACH FILLS, SEE THE ROADWAY PLANS. REINFORCING STEEL IN THE WING WALL MAY BE SHIFTED AS NECESSARY TO CLEAR THE DRAIN PIPE.

TOP OF PILE ELEVATIONS	
①	30.00
②	30.33
③	30.66
④	30.99
⑤	31.32

PROJECT NO. BD-5103U
SAMPSON COUNTY
STATION: 16+99.50 -L-

SHEET 1 OF 4

STATE OF NORTH CAROLINA
DEPARTMENT OF TRANSPORTATION
RALEIGH

SUBSTRUCTURE

END BENT No. 1

NORTH CAROLINA PROFESSIONAL SEAL 025516 ENGINEER EMILY E. MURRAY
10/25/13

REVISIONS						SHEET NO.
NO.	BY:	DATE:	NO.	BY:	DATE:	S-8
1			3			TOTAL SHEETS
2			4			13

ASSEMBLED BY : K.W. EZZARD DATE : 7/3/13
CHECKED BY : PEGGY ADKINS DATE : 7/13/13
DRAWN BY : WJH 12/11
CHECKED BY : AAC 12/11

25-OCT-2013 08:45
S:\DPGI\Emily\BDProjects\BD-5103U\BD-5103U\BD-5103U_CS.dgn
cbpruett

STD. NO. EB_30_90S4

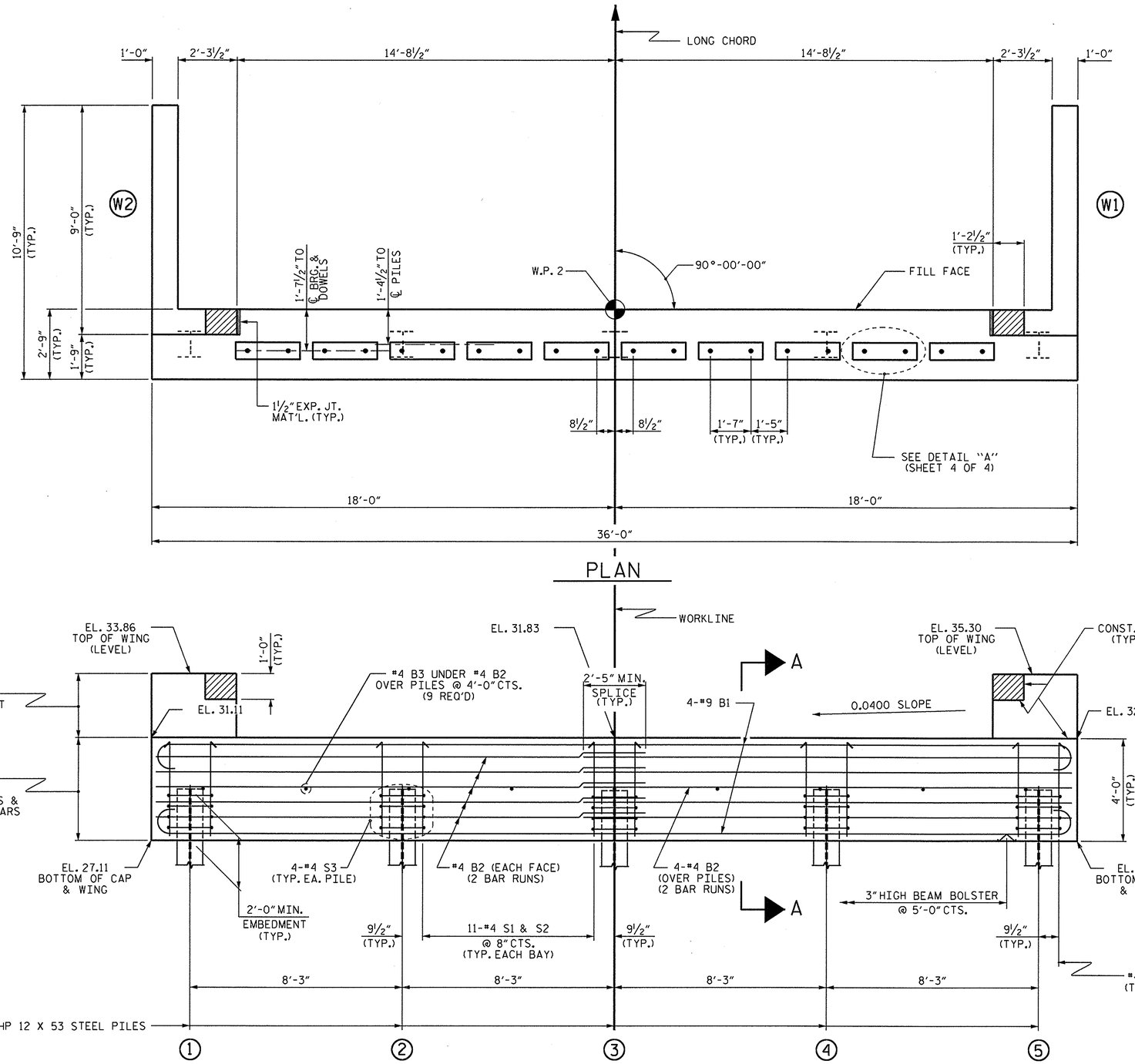

ELEVATION

WINGS NOT SHOWN FOR CLARITY.
FOR SECTION A-A, SEE SHEET 4 OF 4.
CONCRETE COLLARS FOR STEEL PILES NOT SHOWN IN PLAN AND ELEVATION VIEWS FOR CLARITY.
SEE "CORROSION PROTECTION FOR STEEL PILES DETAIL", SHEET 4 OF 4.

NOTES

STIRRUPS IN CAP MAY BE SHIFTED AS NECESSARY TO CLEAR DOWELS.

THE CONCRETE IN THE SHADED AREA OF THE WING SHALL BE POURED AFTER THE VERTICAL CONCRETE BARRIER RAIL IS CAST IF SLIP FORMING IS USED.

FOR PILE SPLICE DETAILS, SEE SHEET 4 OF 4.

FOR WING DETAILS, SEE SHEET 3 OF 4.

INSTALL THE 4" DIA. DRAIN PIPE THROUGH THE WING WALL AS REQUIRED FOR REINFORCED BRIDGE APPROACH FILLS, SEE THE ROADWAY PLANS. REINFORCING STEEL IN THE WING WALL MAY BE SHIFTED AS NECESSARY TO CLEAR THE DRAIN PIPE.

TOP OF PILE ELEVATIONS	
①	29.19
②	29.52
③	29.85
④	30.18
⑤	30.51

PROJECT NO. BD-5103U
SAMPSON COUNTY
STATION: 16+99.50 -L-

SHEET 2 OF 4

STATE OF NORTH CAROLINA
DEPARTMENT OF TRANSPORTATION
RALEIGH

SUBSTRUCTURE

END BENT No. 2

REVISIONS						SHEET NO.
NO.	BY:	DATE:	NO.	BY:	DATE:	S-9
1			3			TOTAL SHEETS
2			4			13

NORTH CAROLINA PROFESSIONAL SEAL 025516 ENGINEER EMILY E. MURRAY
10/25/13

ASSEMBLED BY : K.W. EZZARD	DATE : 7/3/13
CHECKED BY : PEGGY ADKINS	DATE : 7/13/13
DRAWN BY : WJH 12/11	
CHECKED BY : AAC 12/11	

25-OCT-2013 08:44
S:\DPG1\Emily\BDProjects\BD-5103U\BD-5103U\BD-5103U_CS.dgn
cbpruett

STD. NO. EB_30_90S4

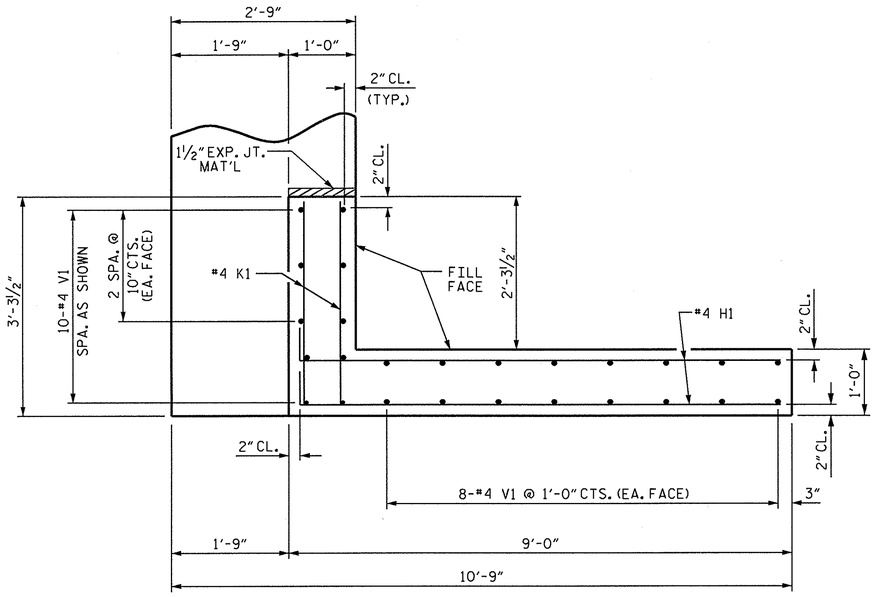

PLAN OF WING (W1)

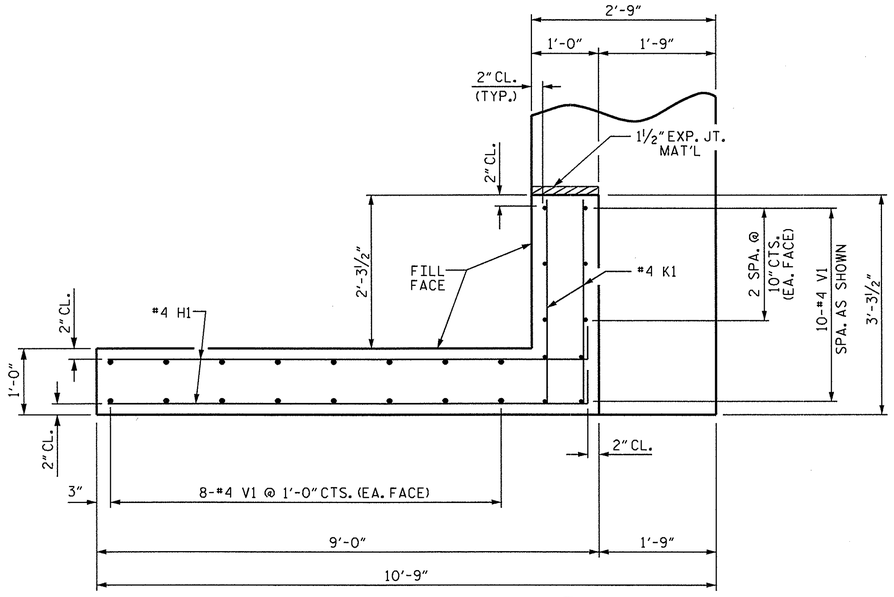

PLAN OF WING (W2)

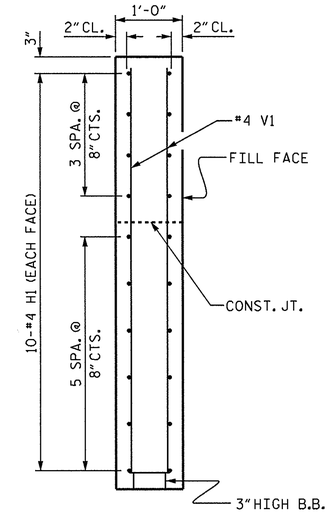

SECTION X-X

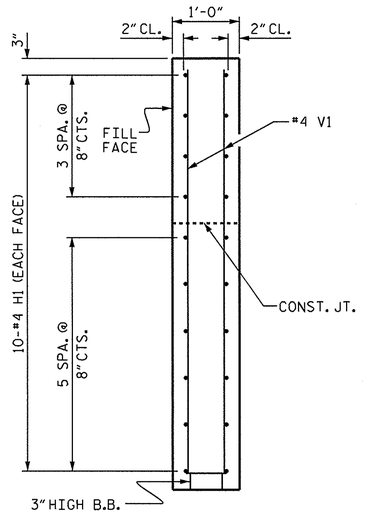

SECTION Y-Y

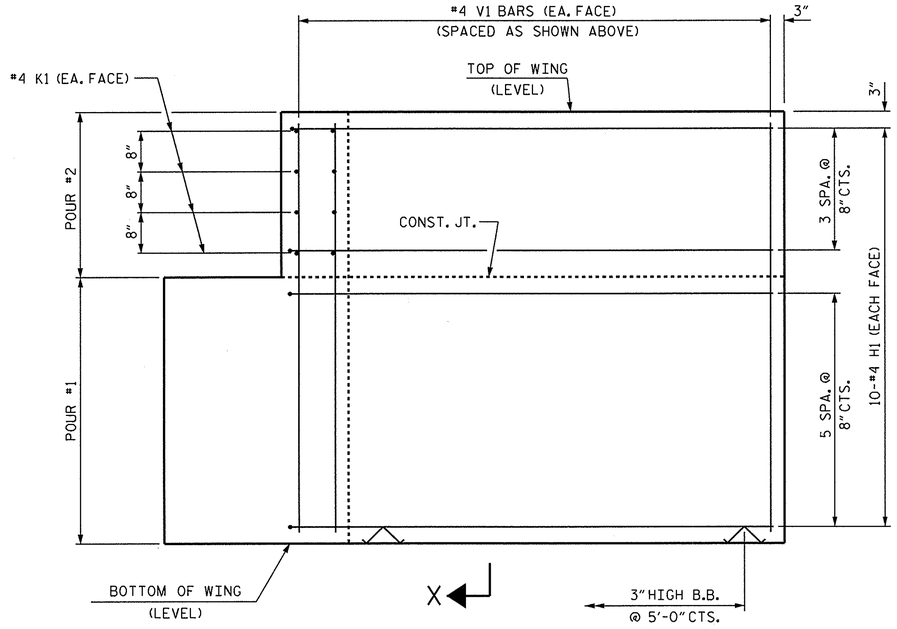

ELEVATION OF WING (W1)

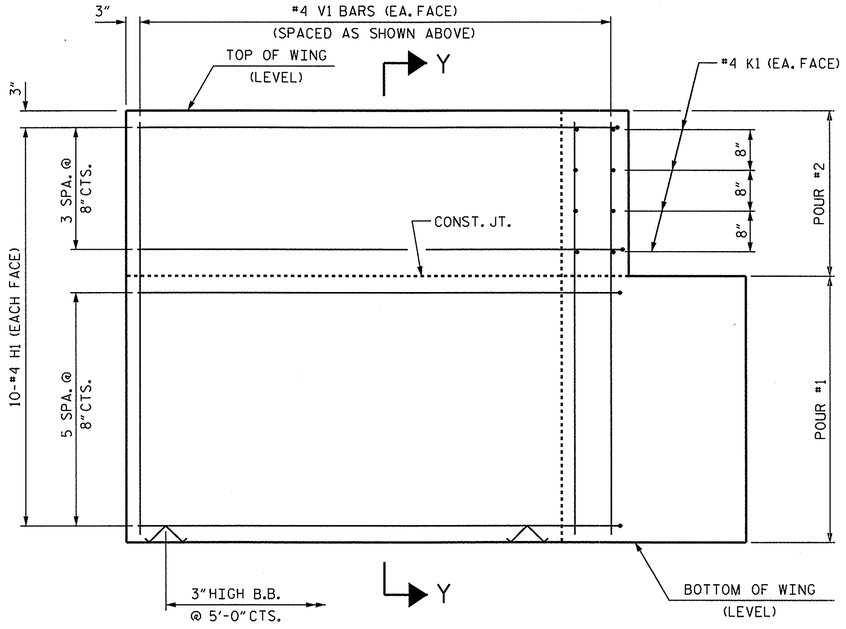

ELEVATION OF WING (W2)

WING DETAILS

NORTH CAROLINA PROFESSIONAL SEAL 025516 ENGINEER EMILY E. MURRAY
10/25/13

PROJECT NO. BD-5103U
SAMPSON COUNTY
STATION: 16+99.50 -L-

SHEET 3 OF 4

STATE OF NORTH CAROLINA
DEPARTMENT OF TRANSPORTATION
RALEIGH

SUBSTRUCTURE
END BENT
WING DETAILS

REVISIONS						SHEET NO.
NO.	BY:	DATE:	NO.	BY:	DATE:	S-10
1			3			TOTAL SHEETS
2			4			13

ASSEMBLED BY : K.W. EZZARD	DATE : 7/3/13	
CHECKED BY : PEGGY ADKINS	DATE : 7/13/13	
DRAWN BY : WJH 12/11		
CHECKED BY : AAC 12/11		

25-OCT-2013 08:44
S:\DPG\\Emily\BDProjects\BD-5103U\BD-5103U\BD-5103U_CS.dgn
cbpruett

STD. NO. EB_30_90S4

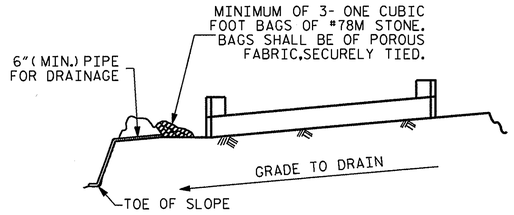

BAGGED STONE AND PIPE SHALL BE PLACED IMMEDIATELY AFTER COMPLETION OF END BENT EXCAVATION. PIPE MAY BE EITHER CONCRETE, CORRUGATED STEEL, CORRUGATED ALUMINUM ALLOY, OR CORRUGATED PLASTIC. PERFORATED PIPE WILL NOT BE ALLOWED.

BAGGED STONE SHALL REMAIN IN PLACE UNTIL THE ENGINEER DIRECTS THAT IT BE REMOVED. THE CONTRACTOR SHALL REMOVE AND DISPOSE OF SILT ACCUMULATIONS AT BAGGED STONE WHEN SO DIRECTED BY THE ENGINEER. BAGS SHALL BE REMOVED AND REPLACED WHENEVER THE ENGINEER DETERMINES THAT THEY HAVE DETERIORATED AND LOST THEIR EFFECTIVENESS.

NO SEPARATE PAYMENT WILL BE MADE FOR THIS WORK AND THE ENTIRE COST OF THIS WORK SHALL BE INCLUDED IN THE UNIT CONTRACT PRICE BID FOR THE SEVERAL PAY ITEMS.

TEMPORARY DRAINAGE AT END BENT

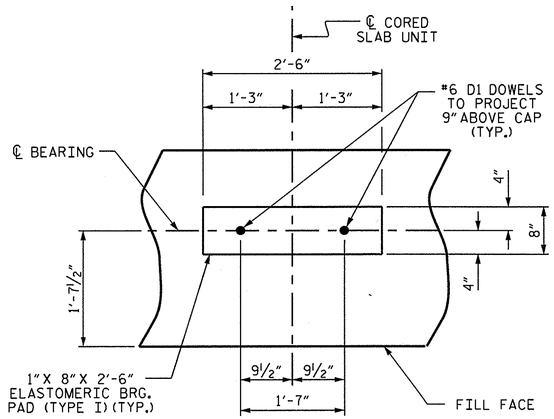

DETAIL "A"

(END BENT No. 1 SHOWN, END BENT No. 2 SIMILAR BY ROTATION)

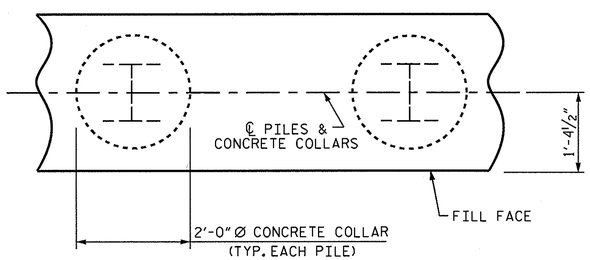

PLAN

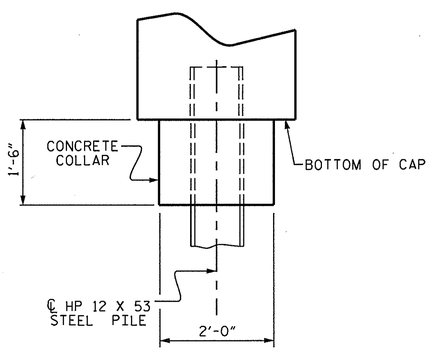

ELEVATION

CORROSION PROTECTION FOR STEEL PILES DETAIL

(END BENT No. 1 SHOWN, END BENT No. 2 SIMILAR BY ROTATION)

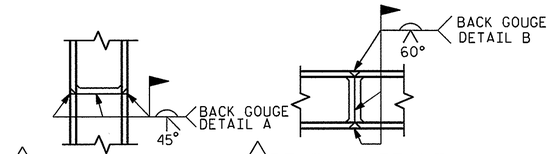

△ POSITION OF PILE DURING WELDING.

PILE SPLICE DETAILS

BAR TYPES

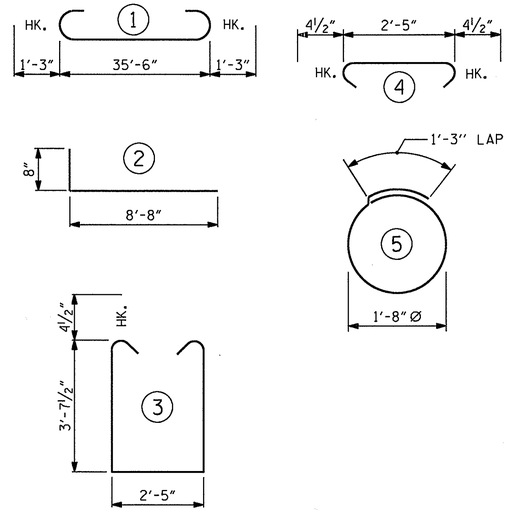

ALL BAR DIMENSIONS ARE OUT TO OUT.

END BENT No. 1		END BENT No. 2	
HP 12 X 53 STEEL PILES		HP 12 X 53 STEEL PILES	
NO: 5	LIN. FT.= 375	NO: 5	LIN. FT.= 350
PILE REDRIVES	EA. 3	PILE REDRIVES	EA. 3

BILL OF MATERIAL

FOR ONE END BENT

BAR	NO.	SIZE	TYPE	LENGTH	WEIGHT
B1	8	#9	1	38'-0"	1034
B2	28	#4	STR	19'-1"	357
B3	9	#4	STR	2'-5"	15
D1	20	#6	STR	1'-6"	45
H1	40	#4	2	9'-4"	249
K1	16	#4	STR	2'-11"	31
S1	46	#4	3	10'-5"	320
S2	46	#4	4	3'-2"	97
S3	20	#4	5	6'-6"	87
V1	52	#4	STR	6'-2"	214

REINFORCING STEEL (FOR ONE END BENT) 2449 LBS.

CLASS A CONCRETE BREAKDOWN (FOR ONE END BENT)

POUR #1	CAP, LOWER PART OF WINGS & COLLARS	17.9 C.Y.
POUR #2	UPPER PART OF WINGS	2.3 C.Y.
TOTAL CLASS A CONCRETE		20.2 C.Y.

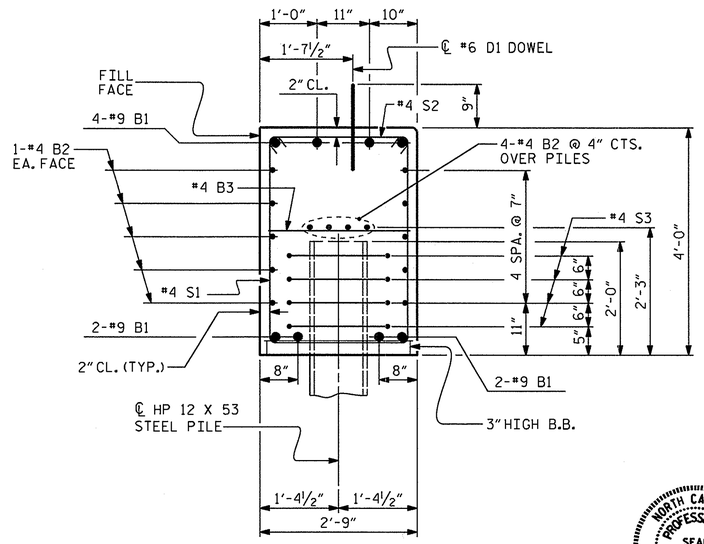

SECTION A-A

(CONCRETE COLLAR NOT SHOWN FOR CLARITY. SEE "CORROSION PROTECTION FOR STEEL PILES DETAIL.")

NORTH CAROLINA PROFESSIONAL SEAL 025516 ENGINEER EMILY E. MURRAY

10/25/13

PROJECT NO. BD-5103U

SAMPSON COUNTY

STATION: 16+99.50 -L-

SHEET 4 OF 4

STATE OF NORTH CAROLINA
DEPARTMENT OF TRANSPORTATION
RALEIGH

SUBSTRUCTURE

END BENT No. 1 & 2 DETAILS

REVISIONS						SHEET NO.
NO.	BY:	DATE:	NO.	BY:	DATE:	S-11
1			3			TOTAL SHEETS
2			4			13

ASSEMBLED BY : K.W. EZZARD	DATE : 7/3/13
CHECKED BY : PEGGY ADKINS	DATE : 7/13/13
DRAWN BY : WJH 12/11	
CHECKED BY : AAC 12/11	

25-OCT-2013 08:44
S:\DPG\N\Emily\BDProjects\BD-5103U\BD-5103U\BD-5103U_CS.dgn
cbpruett

STD. NO. EB_30_90S4

NOTES :

FOR BERM WIDTH DIMENSIONS, SEE GENERAL DRAWING.

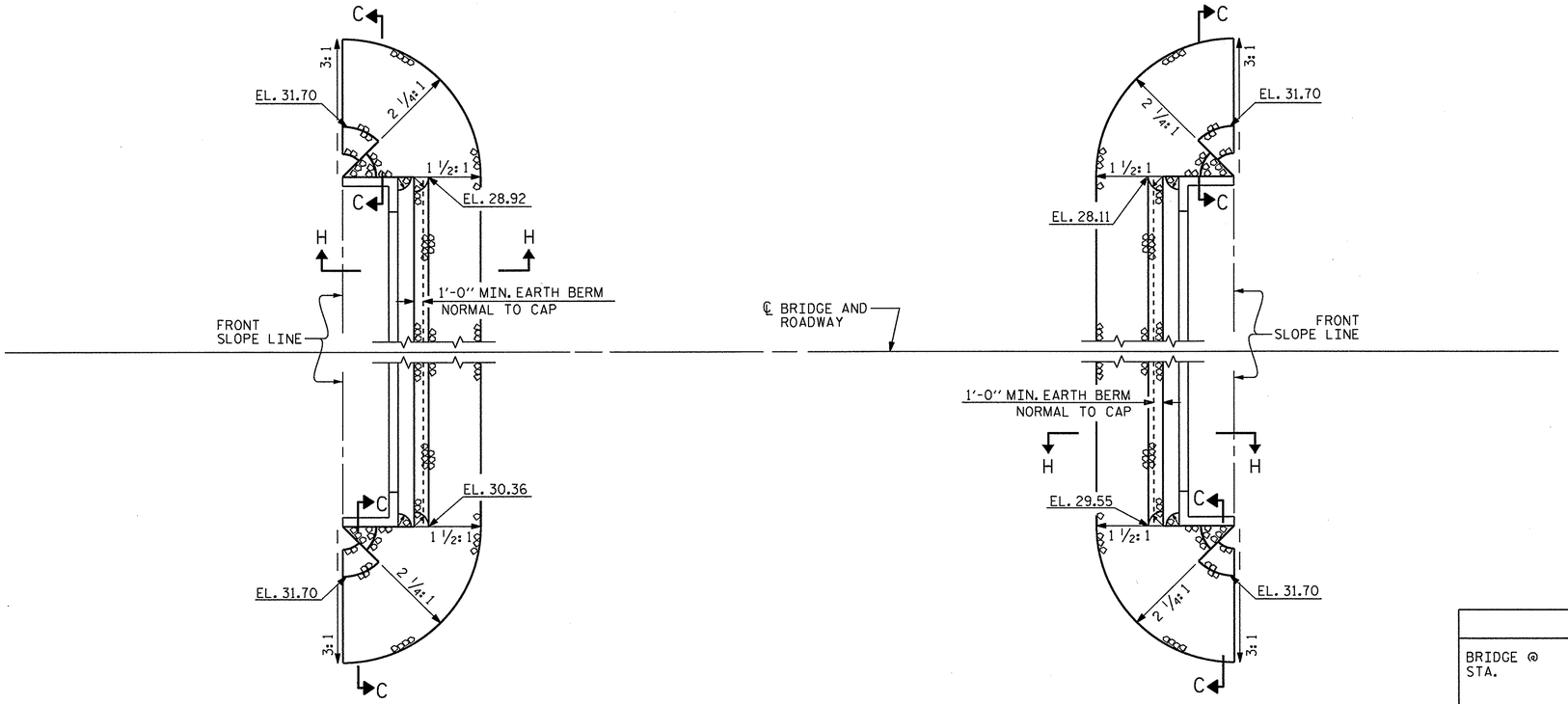

END BENT 1

END BENT 2

ESTIMATED QUANTITIES		
BRIDGE @ STA.	RIP RAP CLASS II (2'-0" THICK)	GEOTEXTILE FOR DRAINAGE
	TONS	SQUARE YARDS
END BENT 1	146	162
END BENT 2	45	50

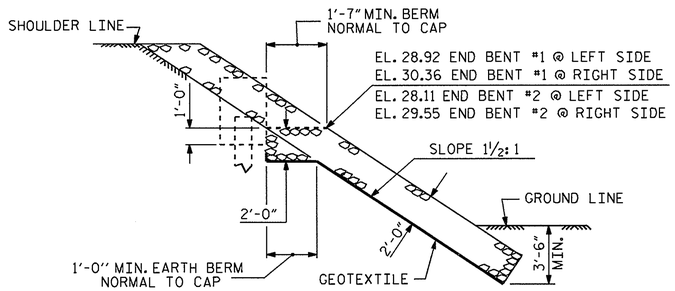

SECTION H-H

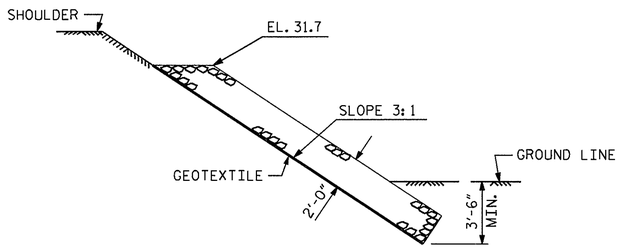

SECTION C-C

PROJECT NO. BD-5103U

SAMPSON COUNTY

STATION: 16+99.50 -L-

SHEET OF

STATE OF NORTH CAROLINA
DEPARTMENT OF TRANSPORTATION
RALEIGH
STANDARD

RIP RAP DETAILS

REVISIONS						SHEET NO.
NO.	BY:	DATE:	NO.	BY:	DATE:	S-12
1			3			TOTAL SHEETS
2			4			13

NORTH CAROLINA PROFESSIONAL SEAL 025516 ENGINEER EMILY E. MURRAY

10/25/13

ASSEMBLED BY : K.W. EZZARD	DATE : 7/3/13	
CHECKED BY : PEGGY ADKINS	DATE : 7/13/13	
DRAWN BY : REK 1/84	REV. 5/1/06R	TLA/GM
CHECKED BY : RDU 1/84	REV. 10/1/11	MAA/GM
	REV. 12/21/11	MAA/GM

25-OCT-2013 08:43
S:\DPG1\Emily\BDProjects\BD-5103U\BD-5103U\BD-5103U_CS.dgn
cbpruett

STD. NO. RR1 (Sht 2)

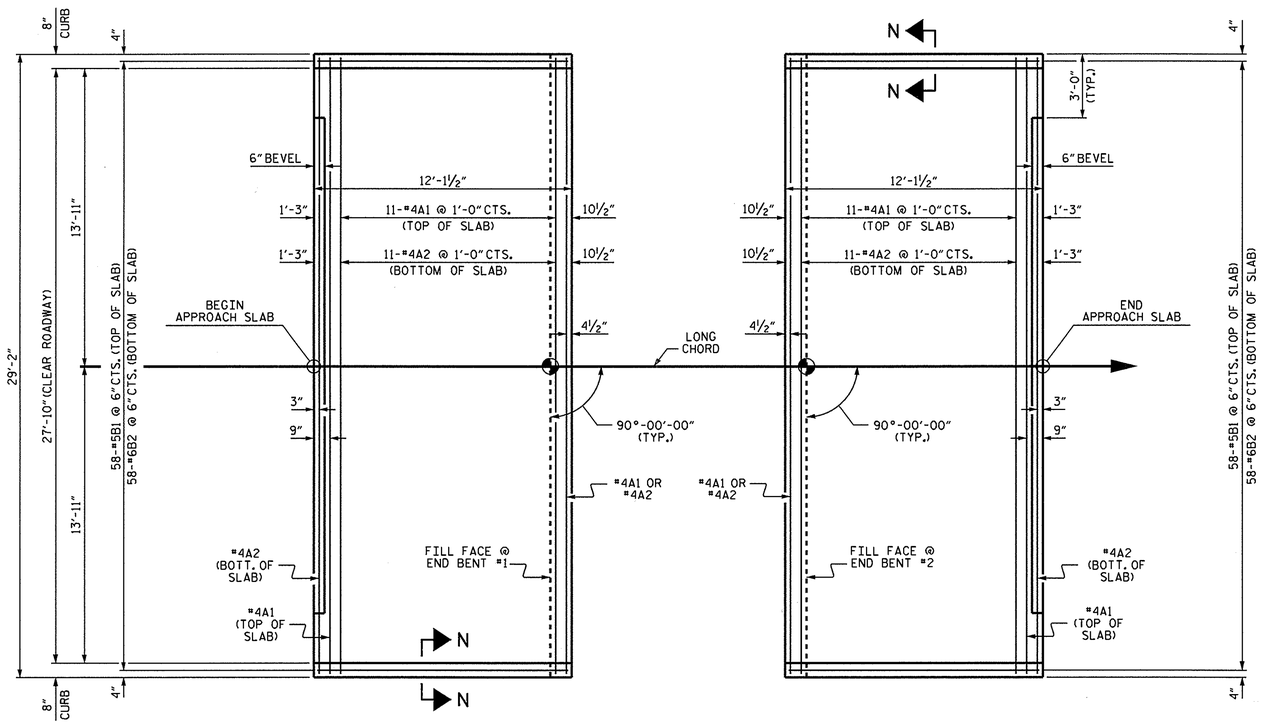

PLAN @ END BENT #1 PLAN @ END BENT #2

DIMENSIONS SHOWN ARE TYPICAL FOR BOTH APPROACH SLABS

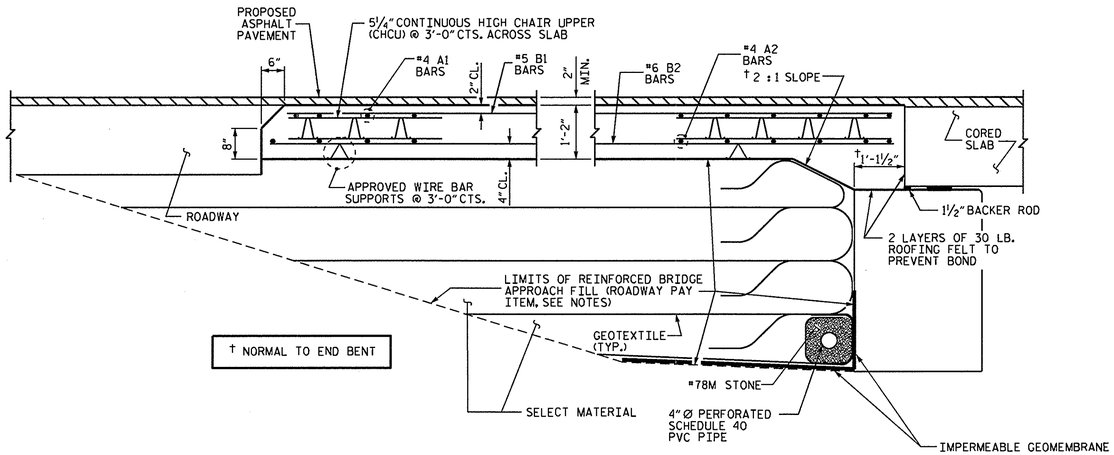

SECTION THRU SLAB

ASSEMBLED BY : K.W. EZZARD	DATE : 7/3/13		
CHECKED BY : PEGGY ADKINS	DATE : 7/13/13		
DRAWN BY : SHS/MAA 5-09	REV. 12-11	MAA/AAC	
CHECKED BY : BCH 5-09			

25-OCT-2013 08:43
S:\DPGI\Emily\BDProjects\BD-5103U\BD-5103U\BD-5103U_CS.dgn
cbpruett

NOTES

FOR REINFORCED BRIDGE APPROACH FILL INCLUDING GEOTEXTILE, IMPERMEABLE GEOMEMBRANE, 4" Ø DRAINAGE PIPE, #78M STONE, AND SELECT MATERIAL, SEE ROADWAY PLANS.

AREA BETWEEN THE WINGWALL AND APPROACH SLAB SHALL BE GRADED TO DRAIN THE WATER AWAY FROM THE FILL FACE OF THE BRIDGE AND SHALL BE PAVED. SEE ROADWAY PLANS.

APPROACH SLAB GROOVING IS NOT REQUIRED.

BILL OF MATERIAL

APPROACH SLAB AT EB #1

BAR	NO.	SIZE	TYPE	LENGTH	WEIGHT
* A1	13	#4	STR	28'-10"	250
A2	13	#4	STR	28'-10"	250
* B1	58	#5	STR	11'-2"	676
B2	58	#6	STR	11'-8"	1016
REINFORCING STEEL				LBS.	1266
* EPOXY COATED REINFORCING STEEL				LBS.	926
CLASS AA CONCRETE				C.Y.	18.1

APPROACH SLAB AT EB #2

BAR	NO.	SIZE	TYPE	LENGTH	WEIGHT
* A1	13	#4	STR	28'-10"	250
A2	13	#4	STR	28'-10"	250
* B1	58	#5	STR	11'-2"	676
B2	58	#6	STR	11'-8"	1016
REINFORCING STEEL				LBS.	1266
* EPOXY COATED REINFORCING STEEL				LBS.	926
CLASS AA CONCRETE				C.Y.	18.1

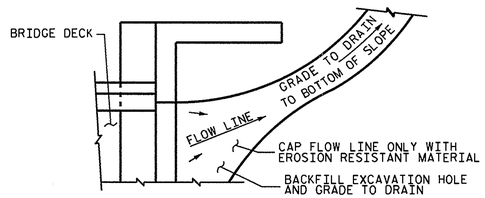

NOTE: IF THE APPROACH SLAB IS NOT CONSTRUCTED IMMEDIATELY AFTER THE BACKFILLING OF THE END BENT EXCAVATION, GRADE TO DRAIN TO THE BOTTOM OF THE SLOPE AND PROVIDE EROSION RESISTANT MATERIAL, SUCH AS FIBERGLASS ROVING OR AS DIRECTED BY THE ENGINEER TO PREVENT SOIL EROSION AND TO PROTECT THE AREA ADJACENT TO THE STRUCTURE. THE CONTRACTOR WILL BE REQUIRED TO REMOVE THESE MATERIALS PRIOR TO CONSTRUCTION OF THE APPROACH SLAB.

TEMPORARY DRAINAGE DETAIL

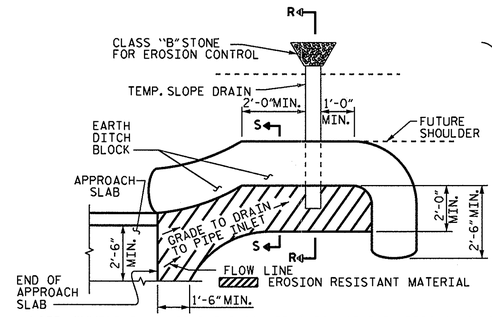

NOTE: IMMEDIATELY AFTER THE CONSTRUCTION OF THE APPROACH SLAB, THE CONTRACTOR SHALL PROVIDE TEMPORARY BERM AND SLOPE DRAIN. CONTRACTOR SHALL GRADE TO PIPE INLET AND PROVIDE EROSION RESISTANT MATERIAL AS SHOWN. THE EROSION RESISTANT MATERIAL SHALL BE EITHER 1) ASPHALT PLANT MIX, TYPE 1 OR TYPE 2, MIN. 2" DEPTH, 2) EROSION CONTROL MAT, OR 3) CONCRETE, AS DIRECTED BY THE ENGINEER. THE SLOPE DRAIN SHALL CONSIST OF A NON-PERFORATED TEMPORARY DRAINAGE PIPE, 12 INCHES IN DIAMETER.

PLAN VIEW

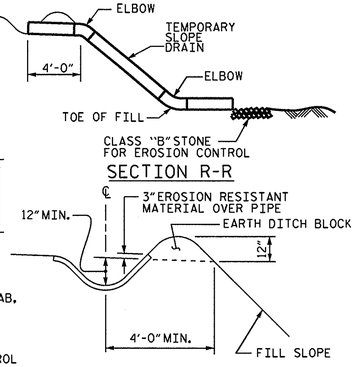

SECTION R-R

SECTION S-S

TEMPORARY BERM AND SLOPE DRAIN DETAILS

(TO BE USED WHEN SHOULDER BERM GUTTER IS REQUIRED)

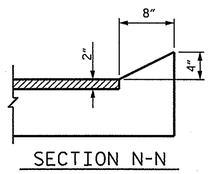

SECTION N-N

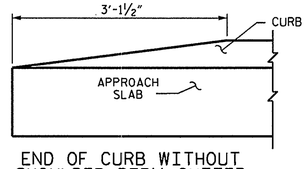

END OF CURB WITHOUT SHOULDER BERM GUTTER

CURB DETAILS

SPLICE LENGTHS		
BAR SIZE	EPOXY COATED	UNCOATED
#4	2'-0"	1'-9"
#5	2'-6"	2'-2"
#6	3'-10"	2'-7"

NORTH CAROLINA PROFESSIONAL SEAL 025516 ENGINEER EMILY E. MURRAY
10/25/13

PROJECT NO. BD-5103U
SAMPSON COUNTY
STATION: 16+99.50 -L-

STATE OF NORTH CAROLINA
DEPARTMENT OF TRANSPORTATION
RALEIGH

STANDARD BRIDGE APPROACH SLAB FOR PRESTRESSED CONCRETE CORED SLAB UNIT (SUB-REGIONAL TIER) 90° SKEW

REVISIONS						SHEET NO.
NO.	BY:	DATE:	NO.	BY:	DATE:	S-13
1			3			TOTAL SHEETS
2			4			13

STD. NO. BAS_30_90S

STANDARD NOTES

DESIGN DATA:

SPECIFICATIONS	A.A.S.H.T.O. (CURRENT)
LIVE LOAD	SEE PLANS
IMPACT ALLOWANCE	SEE A.A.S.H.T.O.
STRESS IN EXTREME FIBER OF	
STRUCTURAL STEEL - AASHTO M270 GRADE 36	20,000 LBS. PER SQ. IN.
- AASHTO M270 GRADE 50W	27,000 LBS. PER SQ. IN.
- AASHTO M270 GRADE 50	27,000 LBS. PER SQ. IN.
REINFORCING STEEL IN TENSION	
GRADE 60	24,000 LBS. PER SQ. IN.
CONCRETE IN COMPRESSION	1,200 LBS. PER SQ. IN.
CONCRETE IN SHEAR	SEE A.A.S.H.T.O.
STRUCTURAL TIMBER - TREATED OR	
UNTREATED - EXTREME FIBER STRESS	1,800 LBS. PER SQ. IN.
COMPRESSION PERPENDICULAR TO GRAIN OF TIMBER	375 LBS. PER SQ. IN.
EQUIVALENT FLUID PRESSURE OF EARTH	30 LBS. PER CU. FT. (MINIMUM)

MATERIAL AND WORKMANSHIP:

EXCEPT AS MAY OTHERWISE BE SPECIFIED ON PLANS OR IN THE SPECIAL PROVISIONS, ALL MATERIAL AND WORKMANSHIP SHALL BE IN ACCORDANCE WITH THE 2012 "STANDARD SPECIFICATIONS FOR ROADS AND STRUCTURES" OF THE N. C. DEPARTMENT OF TRANSPORTATION.

STEEL SHEET PILING FOR PERMANENT OR TEMPORARY APPLICATIONS SHALL BE HOT ROLLED.

CONCRETE:

UNLESS OTHERWISE REQUIRED ON PLANS, CLASS A CONCRETE SHALL BE USED FOR ALL PORTIONS OF ALL STRUCTURES WITH THE EXCEPTION THAT: CLASS AA CONCRETE SHALL BE USED IN BRIDGE SUPERSTRUCTURES, ABUTMENT BACKWALLS, AND APPROACH SLABS; AND CLASS B CONCRETE SHALL BE USED FOR SLOPE PROTECTION AND RIP RAP.

CONCRETE CHAMFERS:

UNLESS OTHERWISE NOTED ON THE PLANS, ALL EXPOSED CORNERS ON STRUCTURES SHALL BE CHAMFERED 3/4" WITH THE FOLLOWING EXCEPTIONS: TOP CORNERS OF CURBS MAY BE ROUNDED TO 1-1/2" RADIUS WHICH IS BUILT INTO CURB FORMS; CORNERS OF TRANSVERSE FLOOR EXPANSION JOINTS SHALL BE ROUNDED WITH A 1/4" FINISHING TOOL UNLESS OTHERWISE REQUIRED ON PLANS; AND CORNERS OF EXPANSION JOINTS IN THE ROADWAY FACES AND TOPS OF CURBS AND SIDEWALKS SHALL BE ROUNDED TO A 1/4" RADIUS WITH A FINISHING STONE OR TOOL UNLESS OTHERWISE REQUIRED ON PLANS.

DOWELS:

DOWELS WHEN INDICATED ON PLANS AS FOR CULVERT EXTENSIONS, SHALL BE EMBEDDED AT LEAST 12" INTO THE OLD CONCRETE AND GROUTED INTO PLACE WITH 1:2 CEMENT MORTAR.

ALLOWANCE FOR DEAD LOAD DEFLECTION, SETTLEMENT, ETC. IN CASTING SUPERSTRUCTURES:

BRIDGES SHALL BE BUILT ON THE GRADE OR VERTICAL CURVE SHOWN ON PLANS. SLABS, CURBS AND PARAPETS SHALL CONFORM TO THE GRADE OR CURVE.

ALL DIMENSIONS WHICH ARE GIVEN IN SECTION AND ARE AFFECTED BY DEAD LOAD DEFLECTIONS ARE DIMENSIONS AT CENTER LINE OF BEARING UNLESS OTHERWISE NOTED ON PLANS. IN SETTING FORMS FOR STEEL BEAM BRIDGES AND PRESTRESSED CONCRETE GIRDER BRIDGES, ADJUSTMENTS SHALL BE MADE DUE TO THE DEAD LOAD DEFLECTIONS FOR THE ELEVATIONS SHOWN. WHERE BLOCKS ARE SHOWN OVER BEAMS FOR BUILDING UP TO THE SLAB, THE VERTICAL DIMENSIONS OF THE BLOCKS SHALL BE ADJUSTED BETWEEN BEARINGS TO COMPENSATE FOR DEAD LOAD DEFLECTIONS, VERTICAL CURVE ORDINATE, AND ACTUAL BEAM CAMBER. WHERE BOTTOM OF SLAB IS IN LINE WITH BOTTOM OF TOP FLANGES, DEPTH OF SLAB BETWEEN BEARINGS SHALL BE ADJUSTED TO COMPENSATE FOR DEAD LOAD DEFLECTION, VERTICAL CURVE ORDINATE, AND ACTUAL BEAM CAMBER.

IN SETTING FALSEWORK AND FORMS FOR REINFORCED CONCRETE SPANS, AN ALLOWANCE SHALL BE MADE FOR DEAD LOAD DEFLECTIONS, SETTLEMENT OF FALSEWORK, AND PERMANENT CAMBER WHICH SHALL BE PROVIDED FOR IN ADDITION TO THE ELEVATIONS SHOWN. AFTER REMOVAL OF THE FALSEWORK, THE FINISHED STRUCTURES SHALL CONFORM TO THE PROFILE AND ELEVATIONS SHOWN ON THE PLANS AND CONSTRUCTION ELEVATIONS FURNISHED BY THE ENGINEER.

DETAILED DRAWINGS FOR FALSEWORK OR FORMS FOR BRIDGE SUPERSTRUCTURE AND ANY STRUCTURE OR PARTS OF A STRUCTURE AS NOTED ON THE PLANS SHALL BE SUBMITTED TO THE ENGINEER FOR APPROVAL BEFORE CONSTRUCTION OF THE FALSEWORK OR FORMS IS STARTED.

REINFORCING STEEL:

ALL REINFORCING STEEL SHALL BE DEFORMED. DIMENSIONS RELATIVE TO PLACEMENT OF REINFORCING ARE TO CENTERS OF BARS UNLESS OTHERWISE INDICATED IN THE PLANS. DIMENSIONS ON BAR DETAILS ARE TO CENTERS OF BARS OR ARE OUT TO OUT AS INDICATED ON PLANS.

WIRE BAR SUPPORTS SHALL BE PROVIDED FOR REINFORCING STEEL WHERE INDICATED ON THE PLANS. WHEN BAR SUPPORT PIECES ARE PLACED IN CONTINUOUS LINES, THEY SHALL BE SO PLACED THAT THE ENDS OF THE SUPPORTING WIRES SHALL BE LAPPED TO LOCK LEGS ON ADJOINING PIECES.

STRUCTURAL STEEL:

AT THE CONTRACTOR'S OPTION, HE MAY SUBSTITUTE 7/8" Ø SHEAR STUDS FOR THE 3/4" Ø STUDS SPECIFIED ON THE PLANS. THIS SUBSTITUTION SHALL BE MADE AT THE RATE OF 3 - 7/8" Ø STUDS FOR 4 - 3/4" Ø STUDS, AND STUD SPACING CHANGES SHALL BE MADE AS NECESSARY TO PROVIDE THE SAME EQUIVALENT NUMBER OF 7/8" Ø STUDS ALONG THE BEAM AS SHOWN FOR 3/4" Ø STUDS BASED ON THE RATIO OF 3 - 7/8" Ø STUDS FOR 4 - 3/4" Ø STUDS. STUDS OF THE LENGTH SPECIFIED ON THE PLANS MUST BE PROVIDED. THE MAXIMUM SPACING SHALL BE 2'-0".

EXCEPT AT THE INTERIOR SUPPORTS OF CONTINUOUS BEAMS WHERE THE COVER PLATE IS IN CONTACT WITH BEARING PLATE, THE CONTRACTOR MAY, AT HIS OPTION, SUBSTITUTE FOR THE COVER PLATES DESIGNATED ON THE PLANS COVER PLATES OF THE EQUIVALENT AREA PROVIDED THESE PLATES ARE AT LEAST 5/16" IN THICKNESS AND DO NOT EXCEED A WIDTH EQUAL TO THE FLANGE WIDTH LESS 2" OR A THICKNESS EQUAL TO 2 TIMES THE FLANGE THICKNESS. THE SIZE OF FILLET WELDS SHALL CONFORM TO THE REQUIREMENTS OF THE CURRENT ANSI/AASHTO/AWS "BRIDGE WELDING CODE". ELECTROSLAG WELDING WILL NOT BE PERMITTED.

WITH THE SOLE EXCEPTION OF EDGES AT SURFACES WHICH BEAR ON OTHER SURFACES, ALL SHARP EDGES AND ENDS OF SHAPES AND PLATES SHALL BE SLIGHTLY ROUNDED BY SUITABLE MEANS TO A RADIUS OF APPROXIMATELY 1/16 INCH OR EQUIVALENT FLAT SURFACE AT A SUITABLE ANGLE PRIOR TO PAINTING, GALVANIZING, OR METALLIZING.

HANDRAILS AND POSTS:

METAL STANDARDS AND FACES OF THE CONCRETE END POSTS FOR THE METAL RAIL SHALL BE SET NORMAL TO THE GRADE OF THE CURB, UNLESS OTHERWISE SHOWN ON PLANS. THE METAL RAIL AND TOPS OF CONCRETE POSTS USED WITH THE ALUMINUM RAIL SHALL BE BUILT PARALLEL TO THE GRADE OF THE CURB.

METAL HANDRAILS SHALL BE IN ACCORDANCE WITH THE PLANS. RAILS SHALL BE AS MANUFACTURED FOR BRIDGE RAILING. CASTINGS SHALL BE OF A UNIFORM APPEARANCE. FINS AND OTHER DEFORMATIONS RESULTING FROM CASTING OR OTHERWISE SHALL BE REMOVED IN A MANNER SO THAT A UNIFORM COLORING OF THE COMPLETED CASTING SHALL BE OBTAINED. CASTINGS WITH DISCOLORATIONS OR OF NON-UNIFORM COLORING WILL NOT BE ACCEPTED. CERTIFIED MILL REPORTS ARE REQUIRED FOR METAL RAILS AND POSTS.

SPECIAL NOTES:

GENERALLY, IN CASE OF DISCREPANCY, THIS STANDARD SHEET OF NOTES SHALL GOVERN OVER THE SPECIFICATIONS, BUT THE REMAINDER OF THE PLANS SHALL GOVERN OVER NOTES HEREON, AND SPECIAL PROVISIONS SHALL GOVERN OVER ALL. SEE SPECIFICATIONS ARTICLE 105-4.

ENGLISH

JANUARY, 1990

STD. NO. SN

REV. 6-16-95 EEM (V) RGW REV. 5-7-03 RWW (V) JTE REV. 10-1-11 MAA (V) GM
REV. 8-16-99 RWW (V) LES REV. 5-1-06 TLA (V) GM

TIP PROJECT: BD-5103U

T.I.P. NO.	SHEET NO.
BD-5103 U	UO-1

STATE OF NORTH CAROLINA
DIVISION OF HIGHWAYS

UTILITIES BY OTHERS PLANS
SAMPSON COUNTY

LOCATION: BRIDGE NO. 38 ON SR 1007 OVER WILDCAT CREEK

TYPE OF WORK: UTILITY BY OTHERS RELOCATION

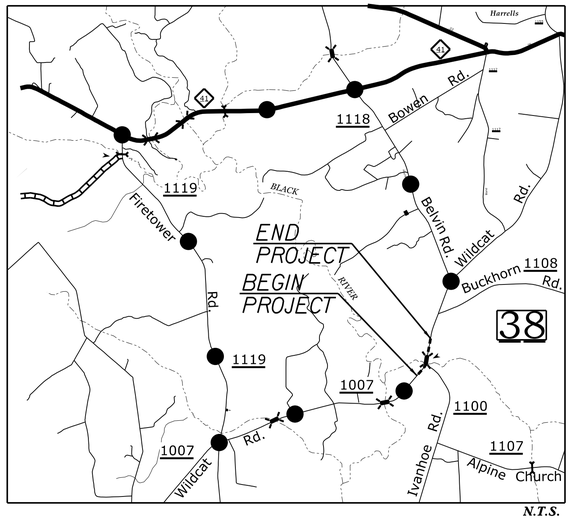

N.T.S.

VICINITY MAP ●●● DETOUR ROUTE

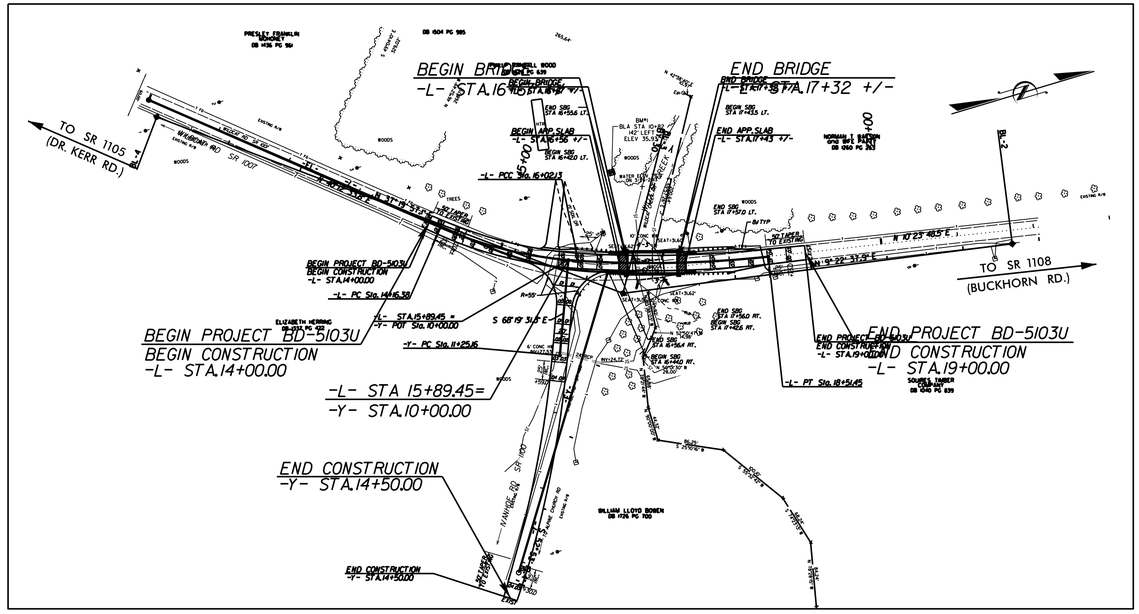

GRAPHIC SCALES

50 25 0 50 100
PLANS

50 25 0 50 100
PROFILE (HORIZONTAL)

10 5 0 10 20
PROFILE (VERTICAL)

INDEX OF SHEETS

SHEET NO.	DESCRIPTION
UO-1	TITLE SHEET
UO-2	PLAN SHEET

UTILITY OWNERS ON PROJECT

(1) STAR TELEPHONE
KENNETH MELVIN
(910) 385 – 5296
KDMELVIN@STMC.NET

UTILITY DESIGN BY:
MA Engineering CONSULTANTS, INC.
598 East Chatham Street Suite 137 Cary, NC 27511
Phone: 919 297 0220 Fax: 919 297 0221

NCDOT PROJECT ENGINEER:
AMANDA T. GLYNN, P.E.
DIVISION 3 BRIDGE PROGRAM MANAGER
PREPARED FOR:
NORTH CAROLINA
DEPARTMENT OF TRANSPORTATION
DIVISION BRIDGE PROGRAM

09/08/99
$$$$$$SYSTIME$$$$$$
$$$$$$USERNAME$$$$$$DGN$$$$$$

PROJECT REFERENCE NO.	SHEET NO.
BD-5103U	UO-2

UTILITIES BY OTHERS

NOTE:
ALL PROPOSED UTILITY WORK SHOWN ON THIS SHEET WILL BE DONE BY OTHERS

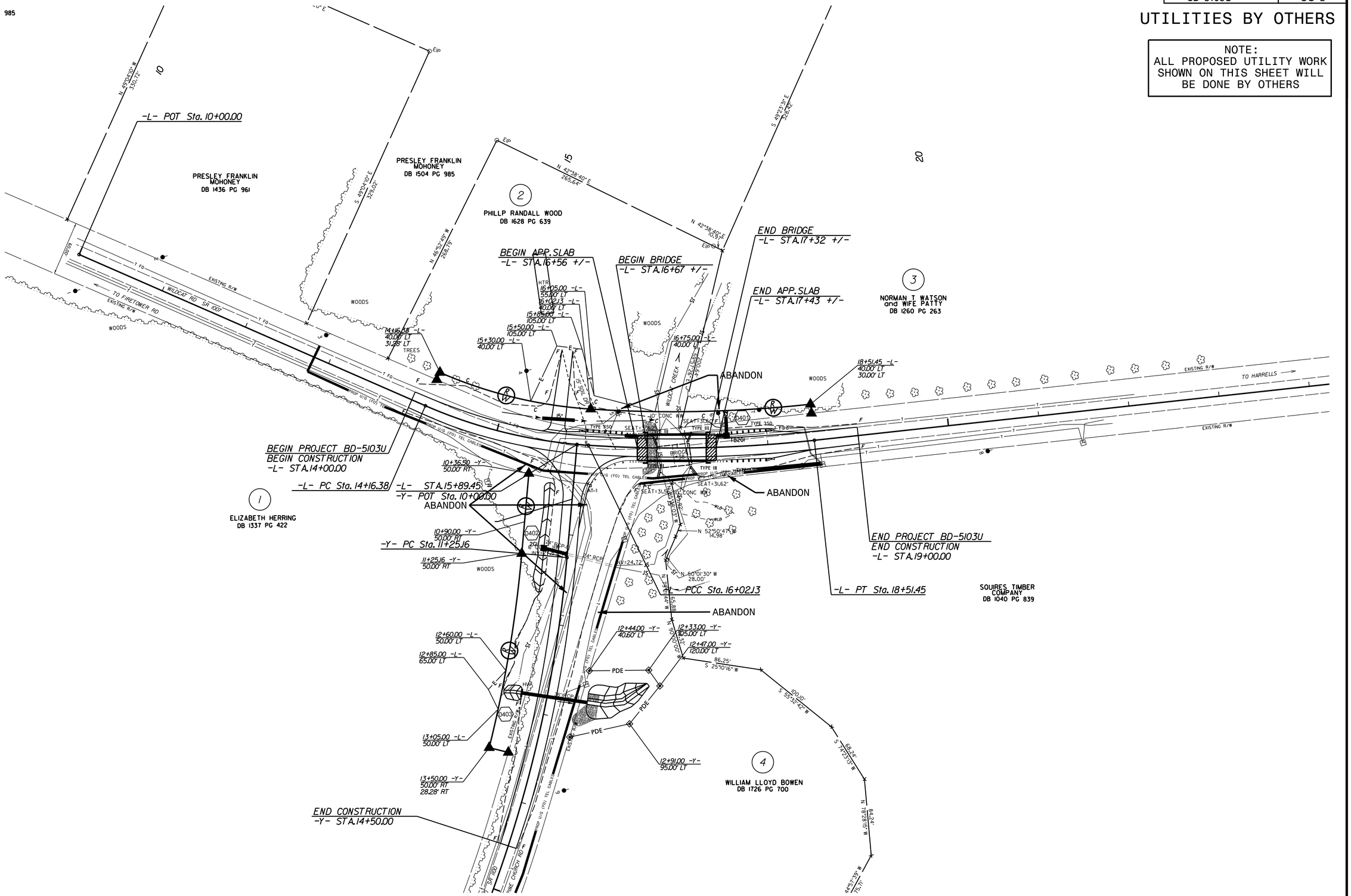

MA Engineering CONSULTANTS, INC.
598 E. Chatham Street, Suite 137
Cary, N. C. 27511

PLAN

HNTB NORTH CAROLINA, P.C.
343 E. Six Forks Road, Suite 200
Raleigh, North Carolina 27609
NC License No: C-1554

PROJECT REFERENCE NO.	SHEET NO.
BD-5103U	04
R/W SHEET NO.	
ROADWAY DESIGN ENGINEER	HYDRAULICS ENGINEER

NAD 83/2011

DENOTES IMPACTS IN SURFACE WATER

DENOTES TEMPORARY IMPACTS IN SURFACE WATER

REVISIONS

PRESLEY FRANKLIN MOHONEY
DB 1436 PG 961

PRESLEY FRANKLIN MOHONEY
DB 1504 PG 985

2
PHILLP RANDALL WOOD
DB 1628 PG 639

3
NORMAN T WATSON and WIFE PATTY
DB 1260 PG 263

1
ELIZABETH HERRING
DB 1337 PG 422

4
WILLIAM LLOYD BOWEN
DB 1726 PG 700

SQUIRES TIMBER COMPANY
DB 1040 PG 839

SITE 1

SITE 2

SPECIAL CUT DITCH
SEE DETAIL A

CLASS 'B' RIP-RAP

SPECIAL LAT. 'V' DITCH
SEE DETAIL B

RETAIN

PIPE COLLAR

STD. BASE DITCH
10 CY DDE
S=0.50%
SEE DETAIL C

BASE DITCH
180 CY DDE
180 SY MATTING
S=0.80%
SEE DETAIL D

CLASS 'B' RIP-RAP

TO FIRETOWER RD

WILDCAT RD SR 1002

TO HARRELLS

TO ALPINE CHURCH RD

WILDCAT CREEK

WOODS

TREES

EXISTING R/W

DETAIL A
SPECIAL CUT DITCH
(Not to Scale)

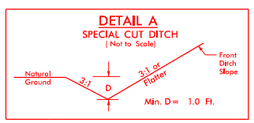

FROM -L- STA. 15+00 TO STA. 16+75 (LT)

DETAIL B
SPECIAL LATERAL 'V' DITCH
(Not to Scale)

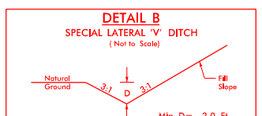

FROM -Y- STA. 10+50 TO STA. 11+60 (RT)

DETAIL C
STANDARD BASE DITCH
(Not to Scale)

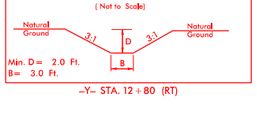

-Y- STA. 12+80 (RT)

DETAIL D
BASE DITCH WITH FLOODPLAIN BENCH
(Not to Scale)

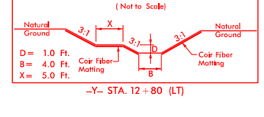

-Y- STA. 12+80 (LT)

NOTE:
FOR -L- PROFILE SEE SHEET No. 5
FOR -Y- PROFILE SEE SHEET No. 5

12/4/2013
5:12:38 PM
...\BD5103U_hyd_prm_s04.dgn

PLAN

HNTB NORTH CAROLINA, P.C.
343 E. Six Forks Road, Suite 200
Raleigh, North Carolina 27609
NC License No: C-1554

PROJECT REFERENCE NO.	SHEET NO.
BD-5103U	04
R/W SHEET NO.	
ROADWAY DESIGN ENGINEER	HYDRAULICS ENGINEER

REVISIONS

NAD 83/2011

DENOTES IMPACTS IN SURFACE WATER

DENOTES TEMPORARY IMPACTS IN SURFACE WATER

PRESLEY FRANKLIN MOHONEY
DB 1436 PG 961

PRESLEY FRANKLIN MOHONEY
DB 1504 PG 985

PHILLP RANDALL WOOD
DB 1628 PG 639

NORMAN T WATSON and WIFE PATTY
DB 1260 PG 263

ELIZABETH HERRING
DB 1337 PG 422

SOUIRES TIMBER COMPANY
DB 1040 PG 839

WILLIAM LLOYD BOWEN
DB 1726 PG 700

SITE 1

SITE 2

SPECIAL CUT DITCH
SEE DETAIL A

SPECIAL LAT. 'V' DITCH
SEE DETAIL B

CLASS 'B' RIP-RAP

RETAIN

PIPE COLLAR

STD. BASE DITCH
10 CY DDE
S=0.50%
SEE DETAIL C

BASE DITCH
180 CY DDE
180 SY MATTING
S=0.80%
SEE DETAIL D

CLASS 'B' RIP-RAP

WILDCAT CREEK

TO PINEVILLE

TO HARRELLS

EXISTING R/W

DETAIL A
SPECIAL CUT DITCH
(Not to Scale)

FROM -L- STA. 15+00 TO STA. 16+75 (LT)

DETAIL B
SPECIAL LATERAL 'V' DITCH
(Not to Scale)

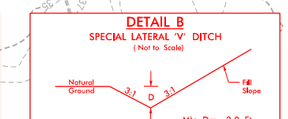

FROM -Y- STA. 10+50 TO STA. 11+60 (RT)

DETAIL C
STANDARD BASE DITCH
(Not to Scale)

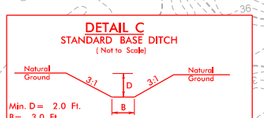

-Y- STA. 12+80 (LT)

DETAIL D
BASE DITCH WITH FLOODPLAIN BENCH
(Not to Scale)

-Y- STA. 12+80 (LT)

NOTE:
FOR -L- PROFILE SEE SHEET No. 5
FOR -Y- PROFILE SEE SHEET No. 5

12/4/2013
5:08:8 PM
...\BD5103U_hyd_prm_s04c.dgn

STATE	STATE PROJECT REFERENCE NO.	SHEET NO	TOTAL SHEETS
N.C.	45349.1.21 (BD-5103U)	1	7

STATE OF NORTH CAROLINA
DEPARTMENT OF TRANSPORTATION
DIVISION OF HIGHWAYS
GEOTECHNICAL ENGINEERING UNIT

STRUCTURE SUBSURFACE INVESTIGATION

PROJ. REFERENCE NO. 45349.1.21 (BD-5103U) F.A. PROJ. BRZ-1007(23)

COUNTY SAMPSON

PROJECT DESCRIPTION BRIDGE NO. 38 ON SR 1007 (WILDCAT ROAD) OVER WILDCAT CREEK

ID: BD-5103U

PROJECT: 45349.1.21

CONTENTS

SHEET	DESCRIPTION
1	TITLE SHEET
2	LEGEND
3	SITE PLAN
4	PROFILE
5, 6	BORE LOGS
7	SITE PHOTOGRAPH

CAUTION NOTICE

THE SUBSURFACE INFORMATION AND THE SUBSURFACE INVESTIGATION ON WHICH IT IS BASED WERE MADE FOR THE PURPOSE OF STUDY, PLANNING, AND DESIGN, AND NOT FOR CONSTRUCTION OR PAY PURPOSES. THE VARIOUS FIELD BORING LOGS, ROCK CORES, AND SOIL TEST DATA AVAILABLE MAY BE REVIEWED OR INSPECTED IN RALEIGH BY CONTACTING THE N. C. DEPARTMENT OF TRANSPORTATION, GEOTECHNICAL ENGINEERING UNIT AT (919) 707-6850. NEITHER THE SUBSURFACE PLANS AND REPORTS, NOR THE FIELD BORING LOGS, ROCK CORES, OR SOIL TEST DATA ARE PART OF THE CONTRACT.

GENERAL SOIL AND ROCK STRATA DESCRIPTIONS AND INDICATED BOUNDARIES ARE BASED ON A GEOTECHNICAL INTERPRETATION OF ALL AVAILABLE SUBSURFACE DATA AND MAY NOT NECESSARILY REFLECT THE ACTUAL SUBSURFACE CONDITIONS BETWEEN BORINGS OR BETWEEN SAMPLED STRATA WITHIN THE BOREHOLE. THE LABORATORY SAMPLE DATA AND THE IN SITU (IN-PLACE) TEST DATA CAN BE RELIED ON ONLY TO THE DEGREE OF RELIABILITY INHERENT IN THE STANDARD TEST METHOD. THE OBSERVED WATER LEVELS OR SOIL MOISTURE CONDITIONS INDICATED IN THE SUBSURFACE INVESTIGATIONS ARE AS RECORDED AT THE TIME OF THE INVESTIGATION. THESE WATER LEVELS OR SOIL MOISTURE CONDITIONS MAY VARY CONSIDERABLY WITH TIME ACCORDING TO CLIMATIC CONDITIONS INCLUDING TEMPERATURES, PRECIPITATION, AND WIND, AS WELL AS OTHER NON-CLIMATIC FACTORS.

THE BIDDER OR CONTRACTOR IS CAUTIONED THAT DETAILS SHOWN ON THE SUBSURFACE PLANS ARE PRELIMINARY ONLY AND IN MANY CASES THE FINAL DESIGN DETAILS ARE DIFFERENT. FOR BIDDING AND CONSTRUCTION PURPOSES, REFER TO THE CONSTRUCTION PLANS AND DOCUMENTS FOR FINAL DESIGN INFORMATION ON THIS PROJECT. THE DEPARTMENT DOES NOT WARRANT OR GUARANTEE THE SUFFICIENCY OR ACCURACY OF THE INVESTIGATION MADE, NOR THE INTERPRETATIONS MADE, OR OPINION OF THE DEPARTMENT AS TO THE TYPE OF MATERIALS AND CONDITIONS TO BE ENCOUNTERED. THE BIDDER OR CONTRACTOR IS CAUTIONED TO MAKE SUCH INDEPENDENT SUBSURFACE INVESTIGATIONS AS HE DEEMS NECESSARY TO SATISFY HIMSELF AS TO CONDITIONS TO BE ENCOUNTERED ON THIS PROJECT. THE CONTRACTOR SHALL HAVE NO CLAIM FOR ADDITIONAL COMPENSATION OR FOR AN EXTENSION OF TIME FOR ANY REASON RESULTING FROM THE ACTUAL CONDITIONS ENCOUNTERED AT THE SITE DIFFERING FROM THOSE INDICATED IN THE SUBSURFACE INFORMATION.

PERSONNEL

N.D. MOHS

O.B. OTI

H.R. CONLEY

J.R. MATULA

H.L. FROATS

INVESTIGATED BY N.D. MOHS

CHECKED BY N.T. ROBERSON

SUBMITTED BY N.T. ROBERSON

DATE JULY 2013

DRAWN BY: T.T. WALKER

NOTE - THE INFORMATION CONTAINED HEREIN IS NOT IMPLIED OR GUARANTEED BY THE N. C. DEPARTMENT OF TRANSPORTATION AS BEING ACCURATE NOR IT IS CONSIDERED TO BE PART OF THE PLANS, SPECIFICATIONS, OR CONTRACT FOR THE PROJECT.

NOTE - BY HAVING REQUESTED THIS INFORMATION THE CONTRACTOR SPECIFICALLY WAIVES ANY CLAIMS FOR INCREASED COMPENSATION OR EXTENSION OF TIME BASED ON DIFFERENCES BETWEEN THE CONDITIONS INDICATED HEREIN AND THE ACTUAL CONDITIONS AT THE PROJECT SITE.

NORTH CAROLINA LICENSED SEAL 2124 GEOLOGIST NATHAN DANIEL MOHS 7/22/13

PROJECT REFERENCE NO.	SHEET NO.
45349.1.21 (BD-5103U)	2

NORTH CAROLINA DEPARTMENT OF TRANSPORTATION
DIVISION OF HIGHWAYS
GEOTECHNICAL ENGINEERING UNIT

SUBSURFACE INVESTIGATION

SOIL AND ROCK LEGEND, TERMS, SYMBOLS, AND ABBREVIATIONS

SOIL DESCRIPTION

SOIL IS CONSIDERED TO BE THE UNCONSOLIDATED, SEMI-CONSOLIDATED, OR WEATHERED EARTH MATERIALS THAT CAN BE PENETRATED WITH A CONTINUOUS FLIGHT POWER AUGER, AND YIELD LESS THAN 100 BLOWS PER FOOT ACCORDING TO STANDARD PENETRATION TEST (AASHTO T206, ASTM D-1586). SOIL CLASSIFICATION IS BASED ON THE AASHTO SYSTEM. BASIC DESCRIPTIONS GENERALLY SHALL INCLUDE: CONSISTENCY, COLOR, TEXTURE, MOISTURE, AASHTO CLASSIFICATION, AND OTHER PERTINENT FACTORS SUCH AS MINERALOGICAL COMPOSITION, ANGULARITY, STRUCTURE, PLASTICITY, ETC. EXAMPLE:

VERY STIFF, GRAY, SILTY CLAY, MOIST WITH INTERBEDDED FINE SAND LAYERS, HIGHLY PLASTIC, A-7-6

SOIL LEGEND AND AASHTO CLASSIFICATION

GENERAL CLASS.	GRANULAR MATERIALS (≤ 35% PASSING #200)							SILT-CLAY MATERIALS (> 35% PASSING #200)				ORGANIC MATERIALS		
GROUP CLASS.	A-1		A-3	A-2				A-4	A-5	A-6	A-7	A-1, A-2 A-3	A-4, A-5 A-6, A-7	
	A-1-a	A-1-b		A-2-4	A-2-5	A-2-6	A-2-7				A-7-5 A-7-6			
SYMBOL														
% PASSING #10	50 MX											GRANULAR SOILS	SILT-CLAY SOILS	MUCK, PEAT
#40	30 MX	50 MX	51 MN											
#200	15 MX	25 MX	10 MX	35 MX	35 MX	35 MX	35 MX	36 MN	36 MN	36 MN	36 MN			
LIQUID LIMIT	6 MX		NP	40 MX	41 MN	40 MX	41 MN	40 MX	41 MN	40 MX	41 MN	SOILS WITH LITTLE OR MODERATE AMOUNTS OF ORGANIC MATTER		HIGHLY ORGANIC SOILS
PLASTIC INDEX				10 MX	10 MX	11 MN	11 MN	10 MX	10 MX	11 MN	11 MN			
GROUP INDEX	0		0	0		4 MX		8 MX	12 MX	16 MX	No MX			
USUAL TYPES OF MAJOR MATERIALS	STONE FRAGS. GRAVEL, AND SAND		FINE SAND	SILTY OR CLAYEY GRAVEL AND SAND				SILTY SOILS		CLAYEY SOILS				
GEN. RATING AS A SUBGRADE	EXCELLENT TO GOOD							FAIR TO POOR				FAIR TO POOR	POOR	UNSUITABLE

PI OF A-7-5 SUBGROUP IS ≤ LL - 30 ; PI OF A-7-6 SUBGROUP IS > LL - 30

CONSISTENCY OR DENSENESS

PRIMARY SOIL TYPE	COMPACTNESS OR CONSISTENCY	RANGE OF STANDARD PENETRATION RESISTENCE (N-VALUE)	RANGE OF UNCONFINED COMPRESSIVE STRENGTH ($TONS/FT^2$)
GENERALLY GRANULAR MATERIAL (NON-COHESIVE)	VERY LOOSE	<4	N/A
	LOOSE	4 TO 10	
	MEDIUM DENSE	10 TO 30	
	DENSE	30 TO 50	
	VERY DENSE	>50	
GENERALLY SILT-CLAY MATERIAL (COHESIVE)	VERY SOFT	<2	<0.25
	SOFT	2 TO 4	0.25 TO 0.50
	MEDIUM STIFF	4 TO 8	0.5 TO 1.0
	STIFF	8 TO 15	1 TO 2
	VERY STIFF	15 TO 30	2 TO 4
	HARD	>30	>4

TEXTURE OR GRAIN SIZE

U.S. STD. SIEVE SIZE	4	10	40	60	200	270
OPENING (MM)	4.76	2.00	0.42	0.25	0.075	0.053

BOULDER (BLDR.)	COBBLE (COB.)	GRAVEL (GR.)	COARSE SAND (CSE. SD.)	FINE SAND (F SD.)	SILT (SL.)	CLAY (CL.)

GRAIN SIZE	MM	305	75	2.0	0.25	0.05	0.005
	IN.	12	3				

SOIL MOISTURE - CORRELATION OF TERMS

SOIL MOISTURE SCALE (ATTERBERG LIMITS)	FIELD MOISTURE DESCRIPTION	GUIDE FOR FIELD MOISTURE DESCRIPTION
	- SATURATED - (SAT.)	USUALLY LIQUID; VERY WET, USUALLY FROM BELOW THE GROUND WATER TABLE
LL — LIQUID LIMIT		
PLASTIC RANGE (PI)	- WET - (W)	SEMISOLID; REQUIRES DRYING TO ATTAIN OPTIMUM MOISTURE
PL — PLASTIC LIMIT		
OM — OPTIMUM MOISTURE	- MOIST - (M)	SOLID; AT OR NEAR OPTIMUM MOISTURE
SL — SHRINKAGE LIMIT		
	- DRY - (D)	REQUIRES ADDITIONAL WATER TO ATTAIN OPTIMUM MOISTURE

PLASTICITY

	PLASTICITY INDEX (PI)	DRY STRENGTH
NONPLASTIC	0-5	VERY LOW
LOW PLASTICITY	6-15	SLIGHT
MED. PLASTICITY	16-25	MEDIUM
HIGH PLASTICITY	26 OR MORE	HIGH

COLOR

DESCRIPTIONS MAY INCLUDE COLOR OR COLOR COMBINATIONS (TAN, RED, YELLOW-BROWN, BLUE-GRAY). MODIFIERS SUCH AS LIGHT, DARK, STREAKED, ETC. ARE USED TO DESCRIBE APPEARANCE.

GRADATION

WELL GRADED - INDICATES A GOOD REPRESENTATION OF PARTICLE SIZES FROM FINE TO COARSE.
UNIFORM - INDICATES THAT SOIL PARTICLES ARE ALL APPROXIMATELY THE SAME SIZE. (ALSO POORLY GRADED)
GAP-GRADED - INDICATES A MIXTURE OF UNIFORM PARTICLES OF TWO OR MORE SIZES.

ANGULARITY OF GRAINS

THE ANGULARITY OR ROUNDNESS OF SOIL GRAINS IS DESIGNATED BY THE TERMS: ANGULAR, SUBANGULAR, SUBROUNDED, OR ROUNDED.

MINERALOGICAL COMPOSITION

MINERAL NAMES SUCH AS QUARTZ, FELDSPAR, MICA, TALC, KAOLIN, ETC. ARE USED IN DESCRIPTIONS WHENEVER THEY ARE CONSIDERED OF SIGNIFICANCE.

COMPRESSIBILITY

SLIGHTLY COMPRESSIBLE	LIQUID LIMIT LESS THAN 31
MODERATELY COMPRESSIBLE	LIQUID LIMIT EQUAL TO 31-50
HIGHLY COMPRESSIBLE	LIQUID LIMIT GREATER THAN 50

PERCENTAGE OF MATERIAL

ORGANIC MATERIAL	GRANULAR SOILS	SILT - CLAY SOILS	OTHER MATERIAL
TRACE OF ORGANIC MATTER	2 - 3%	3 - 5%	TRACE 1 - 10%
LITTLE ORGANIC MATTER	3 - 5%	5 - 12%	LITTLE 10 - 20%
MODERATELY ORGANIC	5 - 10%	12 - 20%	SOME 20 - 35%
HIGHLY ORGANIC	>10%	>20%	HIGHLY 35% AND ABOVE

GROUND WATER

- WATER LEVEL IN BORE HOLE IMMEDIATELY AFTER DRILLING
- STATIC WATER LEVEL AFTER 24 HOURS
- PW — PERCHED WATER, SATURATED ZONE, OR WATER BEARING STRATA
- SPRING OR SEEP

MISCELLANEOUS SYMBOLS

- ROADWAY EMBANKMENT (RE) WITH SOIL DESCRIPTION
- SOIL SYMBOL
- ARTIFICIAL FILL (AF) OTHER THAN ROADWAY EMBANKMENT
- INFERRED SOIL BOUNDARY
- INFERRED ROCK LINE
- ALLUVIAL SOIL BOUNDARY
- 25/025 — DIP & DIP DIRECTION OF ROCK STRUCTURES
- SPT / DPT / DMT / VST / PMT — TEST BORING
- AUGER BORING
- CORE BORING
- MW — MONITORING WELL
- PIEZOMETER INSTALLATION
- SLOPE INDICATOR INSTALLATION
- CONE PENETROMETER TEST
- SOUNDING ROD
- TEST BORING W/ CORE
- SPT N-VALUE
- (REF) — SPT REFUSAL

ABBREVIATIONS

AR - AUGER REFUSAL
BT - BORING TERMINATED
CL. - CLAY
CPT - CONE PENETRATION TEST
CSE. - COARSE
DMT - DILATOMETER TEST
DPT - DYNAMIC PENETRATION TEST
e - VOID RATIO
F - FINE
FOSS. - FOSSILIFERDUS
FRAC. - FRACTURED, FRACTURES
FRAGS. - FRAGMENTS
HI. - HIGHLY
MED. - MEDIUM
MICA. - MICACEOUS
MOD. - MODERATELY
NP - NON PLASTIC
ORG. - ORGANIC
PMT - PRESSUREMETER TEST
SAP. - SAPROLITIC
SD. - SAND, SANDY
SL. - SILT, SILTY
SLI. - SLIGHTLY
TCR - TRICONE REFUSAL
w - MOISTURE CONTENT
V - VERY
VST - VANE SHEAR TEST
WEA. - WEATHERED
γ - UNIT WEIGHT
γ_d - DRY UNIT WEIGHT

SAMPLE ABBREVIATIONS

S - BULK
SS - SPLIT SPOON
ST - SHELBY TUBE
RS - ROCK
RT - RECOMPACTED TRIAXIAL
CBR - CALIFORNIA BEARING RATIO

EQUIPMENT USED ON SUBJECT PROJECT

DRILL UNITS:
- [ ] MOBILE B-___
- [ ] BK-51
- [ ] CME-45C
- [ ] CME-550
- [ ] PORTABLE HOIST
- [X] CME-55
- [ ] _____

ADVANCING TOOLS:
- [X] CLAY BITS
- [ ] 6" CONTINUOUS FLIGHT AUGER
- [ ] 8" HOLLOW AUGERS
- [ ] HARD FACED FINGER BITS
- [ ] TUNG.-CARBIDE INSERTS
- [ ] CASING [ ] W/ ADVANCER
- [ ] TRICONE _____" STEEL TEETH
- [ ] TRICONE _____" TUNG.-CARB.
- [ ] CORE BIT
- [ ] _____

HAMMER TYPE:
- [X] AUTOMATIC
- [ ] MANUAL

CORE SIZE:
- [ ] -B_____
- [ ] -N_____
- [ ] -H_____

HAND TOOLS:
- [ ] POST HOLE DIGGER
- [ ] HAND AUGER
- [ ] SOUNDING ROD
- [ ] VANE SHEAR TEST
- [ ] _____

ROCK DESCRIPTION

HARD ROCK IS NON-COASTAL PLAIN MATERIAL THAT IF TESTED, WOULD YIELD SPT REFUSAL. AN INFERRED ROCK LINE INDICATES THE LEVEL AT WHICH NON-COASTAL PLAIN MATERIAL WOULD YIELD SPT REFUSAL. SPT REFUSAL IS PENETRATION BY A SPLIT SPOON SAMPLER EQUAL TO OR LESS THAN 0.1 FOOT PER 60 BLOWS. IN NON-COASTAL PLAIN MATERIAL, THE TRANSITION BETWEEN SOIL AND ROCK IS OFTEN REPRESENTED BY A ZONE OF WEATHERED ROCK.
ROCK MATERIALS ARE TYPICALLY DIVIDED AS FOLLOWS:

WEATHERED ROCK (WR)	NON-COASTAL PLAIN MATERIAL THAT WOULD YIELD SPT N VALUES > 100 BLOWS PER FOOT IF TESTED.
CRYSTALLINE ROCK (CR)	FINE TO COARSE GRAIN IGNEOUS AND METAMORPHIC ROCK THAT WOULD YIELD SPT REFUSAL IF TESTED. ROCK TYPE INCLUDES GRANITE, GNEISS, GABBRO, SCHIST, ETC.
NON-CRYSTALLINE ROCK (NCR)	FINE TO COARSE GRAIN METAMORPHIC AND NON-COASTAL PLAIN SEDIMENTARY ROCK THAT WOULD YEILD SPT REFUSAL IF TESTED. ROCK TYPE INCLUDES PHYLLITE, SLATE, SANDSTONE, ETC.
COASTAL PLAIN SEDIMENTARY ROCK (CP)	COASTAL PLAIN SEDIMENTS CEMENTED INTO ROCK, BUT MAY NOT YIELD SPT REFUSAL. ROCK TYPE INCLUDES LIMESTONE, SANDSTONE, CEMENTED SHELL BEDS, ETC.

WEATHERING

FRESH	ROCK FRESH, CRYSTALS BRIGHT, FEW JOINTS MAY SHOW SLIGHT STAINING. ROCK RINGS UNDER HAMMER IF CRYSTALLINE.
VERY SLIGHT (V SLI.)	ROCK GENERALLY FRESH, JOINTS STAINED, SOME JOINTS MAY SHOW THIN CLAY COATINGS IF OPEN, CRYSTALS ON A BROKEN SPECIMEN FACE SHINE BRIGHTLY. ROCK RINGS UNDER HAMMER BLOWS IF OF A CRYSTALLINE NATURE.
SLIGHT (SLI.)	ROCK GENERALLY FRESH, JOINTS STAINED AND DISCOLORATION EXTENDS INTO ROCK UP TO 1 INCH. OPEN JOINTS MAY CONTAIN CLAY. IN GRANITOID ROCKS SOME OCCASIONAL FELDSPAR CRYSTALS ARE DULL AND DISCOLORED. CRYSTALLINE ROCKS RING UNDER HAMMER BLOWS.
MODERATE (MOD.)	SIGNIFICANT PORTIONS OF ROCK SHOW DISCOLORATION AND WEATHERING EFFECTS. IN GRANITOID ROCKS, MOST FELDSPARS ARE DULL AND DISCOLORED, SOME SHOW CLAY. ROCK HAS DULL SOUND UNDER HAMMER BLOWS AND SHOWS SIGNIFICANT LOSS OF STRENGTH AS COMPARED WITH FRESH ROCK.
MODERATELY SEVERE (MOD. SEV.)	ALL ROCK EXCEPT QUARTZ DISCOLORED OR STAINED. IN GRANITOID ROCKS, ALL FELDSPARS DULL AND DISCOLORED AND A MAJORITY SHOW KAOLINIZATION. ROCK SHOWS SEVERE LOSS OF STRENGTH AND CAN BE EXCAVATED WITH A GEOLOGIST'S PICK. ROCK GIVES "CLUNK" SOUND WHEN STRUCK. *IF TESTED, WOULD YIELD SPT REFUSAL*
SEVERE (SEV.)	ALL ROCK EXCEPT QUARTZ DISCOLORED OR STAINED. ROCK FABRIC CLEAR AND EVIDENT BUT REDUCED IN STRENGTH TO STRONG SOIL. IN GRANITOID ROCKS ALL FELDSPARS ARE KAOLINIZED TO SOME EXTENT. SOME FRAGMENTS OF STRONG ROCK USUALLY REMAIN. *IF TESTED, YIELDS SPT N VALUES > 100 BPF*
VERY SEVERE (V SEV.)	ALL ROCK EXCEPT QUARTZ DISCOLORED OR STAINED. ROCK FABRIC ELEMENTS ARE DISCERNIBLE BUT THE MASS IS EFFECTIVELY REDUCED TO SOIL STATUS, WITH ONLY FRAGMENTS OF STRONG ROCK REMAINING. SAPROLITE IS AN EXAMPLE OF ROCK WEATHERED TO A DEGREE SUCH THAT ONLY MINOR VESTIGES OF THE ORIGINAL ROCK FABRIC REMAIN. *IF TESTED, YIELDS SPT N VALUES < 100 BPF*
COMPLETE	ROCK REDUCED TO SOIL. ROCK FABRIC NOT DISCERNIBLE, OR DISCERNIBLE ONLY IN SMALL AND SCATTERED CONCENTRATIONS. QUARTZ MAY BE PRESENT AS DIKES OR STRINGERS. SAPROLITE IS ALSO AN EXAMPLE.

ROCK HARDNESS

VERY HARD	CANNOT BE SCRATCHED BY KNIFE OR SHARP PICK. BREAKING OF HAND SPECIMENS REQUIRES SEVERAL HARD BLOWS OF THE GEOLOGIST'S PICK.
HARD	CAN BE SCRATCHED BY KNIFE OR PICK ONLY WITH DIFFICULTY. HARD HAMMER BLOWS REQUIRED TO DETACH HAND SPECIMEN.
MODERATELY HARD	CAN BE SCRATCHED BY KNIFE OR PICK. GOUGES OR GROOVES TO 0.25 INCHES DEEP CAN BE EXCAVATED BY HARD BLOW OF A GEOLOGIST'S PICK. HAND SPECIMENS CAN BE DETACHED BY MODERATE BLOWS.
MEDIUM HARD	CAN BE GROOVED OR GOUGED 0.05 INCHES DEEP BY FIRM PRESSURE OF KNIFE OR PICK POINT. CAN BE EXCAVATED IN SMALL CHIPS TO PEICES 1 INCH MAXIMUM SIZE BY HARD BLOWS OF THE POINT OF A GEOLOGIST'S PICK.
SOFT	CAN BE GROVED OR GOUGED READILY BY KNIFE OR PICK. CAN BE EXCAVATED IN FRAGMENTS FROM CHIPS TO SEVERAL INCHES IN SIZE BY MODERATE BLOWS OF A PICK POINT. SMALL, THIN PIECES CAN BE BROKEN BY FINGER PRESSURE.
VERY SOFT	CAN BE CARVED WITH KNIFE. CAN BE EXCAVATED READILY WITH POINT OF PICK. PIECES 1 INCH OR MORE IN THICKNESS CAN BE BROKEN BY FINGER PRESSURE. CAN BE SCRATCHED READILY BY FINGERNAIL.

FRACTURE SPACING

TERM	SPACING
VERY WIDE	MORE THAN 10 FEET
WIDE	3 TO 10 FEET
MODERATELY CLOSE	1 TO 3 FEET
CLOSE	0.16 TO 1 FEET
VERY CLOSE	LESS THAN 0.16 FEET

BEDDING

TERM	THICKNESS
VERY THICKLY BEDDED	> 4 FEET
THICKLY BEDDED	1.5 - 4 FEET
THINLY BEDDED	0.16 - 1.5 FEET
VERY THINLY BEDDED	0.03 - 0.16 FEET
THICKLY LAMINATED	0.008 - 0.03 FEET
THINLY LAMINATED	< 0.008 FEET

INDURATION

FOR SEDIMENTARY ROCKS, INDURATION IS THE HARDENING OF THE MATERIAL BY CEMENTING, HEAT, PRESSURE, ETC.

FRIABLE	RUBBING WITH FINGER FREES NUMEROUS GRAINS; GENTLE BLOW BY HAMMER DISINTEGRATES SAMPLE.
MODERATELY INDURATED	GRAINS CAN BE SEPARATED FROM SAMPLE WITH STEEL PROBE; BREAKS EASILY WHEN HIT WITH HAMMER.
INDURATED	GRAINS ARE DIFFICULT TO SEPARATE WITH STEEL PROBE; DIFFICULT TO BREAK WITH HAMMER.
EXTREMELY INDURATED	SHARP HAMMER BLOWS REQUIRED TO BREAK SAMPLE; SAMPLE BREAKS ACROSS GRAINS.

TERMS AND DEFINITIONS

ALLUVIUM (ALLUV.) - SOILS THAT HAVE BEEN TRANSPORTED BY WATER.

AQUIFER - A WATER BEARING FORMATION OR STRATA.

ARENACEOUS - APPLIED TO ROCKS THAT HAVE BEEN DERIVED FROM SAND OR THAT CONTAIN SAND.

ARGILLACEOUS - APPLIED TO ALL ROCKS OR SUBSTANCES COMPOSED OF CLAY MINERALS, OR HAVING A NOTABLE PROPORTION OF CLAY IN THEIR COMPOSITION, AS SHALE, SLATE, ETC.

ARTESIAN - GROUND WATER THAT IS UNDER SUFFICIENT PRESSURE TO RISE ABOVE THE LEVEL AT WHICH IT IS ENCOUNTERED, BUT WHICH DOES NOT NECESSARILY RISE TO OR ABOVE THE GROUND SURFACE.

CALCAREOUS (CALC.) - SOILS THAT CONTAIN APPRECIABLE AMOUNTS OF CALCIUM CARBONATE.

COLLUVIUM - ROCK FRAGMENTS MIXED WITH SOIL DEPOSITED BY GRAVITY ON SLOPE OR AT BOTTOM OF SLOPE.

CORE RECOVERY (REC.) - TOTAL LENGTH OF ALL MATERIAL RECOVERED IN THE CORE BARREL DIVIDED BY TOTAL LENGTH OF CORE RUN AND EXPRESSED AS A PERCENTAGE.

DIKE - A TABULAR BODY OF IGNEOUS ROCK THAT CUTS ACROSS THE STRUCTURE OF ADJACENT ROCKS OR CUTS MASSIVE ROCK.

DIP - THE ANGLE AT WHICH A STRATUM OR ANY PLANAR FEATURE IS INCLINED FROM THE HORIZONTAL.

DIP DIRECTION (DIP AZIMUTH) - THE DIRECTION OR BEARING OF THE HORIZONTAL TRACE OF THE LINE OF DIP, MEASURED CLOCKWISE FROM NORTH.

FAULT - A FRACTURE OR FRACTURE ZONE ALONG WHICH THERE HAS BEEN DISPLACEMENT OF THE SIDES RELATIVE TO ONE ANOTHER PARALLEL TO THE FRACTURE.

FISSILE - A PROPERTY OF SPLITTING ALONG CLOSELY SPACED PARALLEL PLANES.

FLOAT - ROCK FRAGMENTS ON SURFACE NEAR THEIR ORIGINAL POSITION AND DISLODGED FROM PARENT MATERIAL.

FLOOD PLAIN (FP) - LAND BORDERING A STREAM, BUILT OF SEDIMENTS DEPOSITED BY THE STREAM.

FORMATION (FM.) - A MAPPABLE GEOLOGIC UNIT THAT CAN BE RECOGNIZED AND TRACED IN THE FIELD.

JOINT - FRACTURE IN ROCK ALONG WHICH NO APPRECIABLE MOVEMENT HAS OCCURRED.

LEDGE - A SHELF-LIKE RIDGE OR PROJECTION OF ROCK WHOSE THICKNESS IS SMALL COMPARED TO ITS LATERAL EXTENT.

LENS - A BODY OF SOIL OR ROCK THAT THINS OUT IN ONE OR MORE DIRECTIONS.

MOTTLED (MOT.) - IRREGULARLY MARKED WITH SPOTS OF DIFFERENT COLORS. MOTTLING IN SOILS USUALLY INDICATES POOR AERATION AND LACK OF GOOD DRAINAGE.

PERCHED WATER - WATER MAINTAINED ABOVE THE NORMAL GROUND WATER LEVEL BY THE PRESENCE OF AN INTERVENING IMPERVIOUS STRATUM.

RESIDUAL (RES.) SOIL - SOIL FORMED IN PLACE BY THE WEATHERING OF ROCK.

ROCK QUALITY DESIGNATION (RQD) - A MEASURE OF ROCK QUALITY DESCRIBED BY TOTAL LENGTH OF ROCK SEGMENTS EQUAL TO OR GREATER THAN 4 INCHES DIVIDED BY THE TOTAL LENGTH OF CORE RUN AND EXPRESSED AS A PERCENTAGE.

SAPROLITE (SAP.) - RESIDUAL SOIL THAT RETAINS THE RELIC STRUCTURE OR FABRIC OF THE PARENT ROCK.

SILL - AN INTRUSIVE BODY OF IGNEOUS ROCK OF APPROXIMATELY UNIFORM THICKNESS AND RELATIVELY THIN COMPARED WITH ITS LATERAL EXTENT, THAT HAS BEEN EMPLACED PARALLEL TO THE BEDDING OR SCHISTOSITY OF THE INTRUDED ROCKS.

SLICKENSIDE - POLISHED AND STRIATED SURFACE THAT RESULTS FROM FRICTION ALONG A FAULT OR SLIP PLANE.

STANDARD PENETRATION TEST (PENETRATION RESISTANCE) (SPT) - NUMBER OF BLOWS (N OR BPF) OF A 140 LB. HAMMER FALLING 30 INCHES REQUIRED TO PRODUCE A PENETRATION OF 1 FOOT INTO SOIL WITH A 2 INCH OUTSIDE DIAMETER SPLIT SPOON SAMPLER. SPT REFUSAL IS PENETRATION EQUAL TO OR LESS THAN 0.1 FOOT PER 60 BLOWS.

STRATA CORE RECOVERY (SREC.) - TOTAL LENGTH OF STRATA MATERIAL RECOVERED DIVIDED BY TOTAL LENGTH OF STRATUM AND EXPRESSED AS A PERCENTAGE.

STRATA ROCK QUALITY DESIGNATION (SRQD) - A MEASURE OF ROCK QUALITY DESCRIBED BY TOTAL LENGTH OF ROCK SEGMENTS WITHIN A STRATUM EQUAL TO OR GREATER THAN 4 INCHES DIVIDED BY THE TOTAL LENGTH OF STRATA AND EXPRESSED AS A PERCENTAGE.

TOPSOIL (TS.) - SURFACE SOILS USUALLY CONTAINING ORGANIC MATTER.

BENCH MARK: BL-3: -BL- STA. 11+51.58

ELEVATION: 32.77 FT.

NOTES:

REVISED 09/23/09

PROJECT REFERENCE NO.	SHEET
45349.1.21 (BD-5103U)	3

SITE PLAN

0 40 80
FEET

HTR

NAD 83/2011

WOODS

TREES

15' SOIL DR

WILDCAT CREEK

JS

WOODS

T FO

T

EB1-A

-L-

WILDCAT RD SR 1007

BRIDGE #38

EB2-B

BL-3

WLB

BEGIN PROJECT BD-5103U
BEGIN CONSTRUCTION
-L- STA. 14+00.00

-Y-

WOODS

IVANHOE RD SR 1100

END PROJECT BD-5103U
END CONSTRUCTION
-L- STA. 19+00.00

SKEW=90°

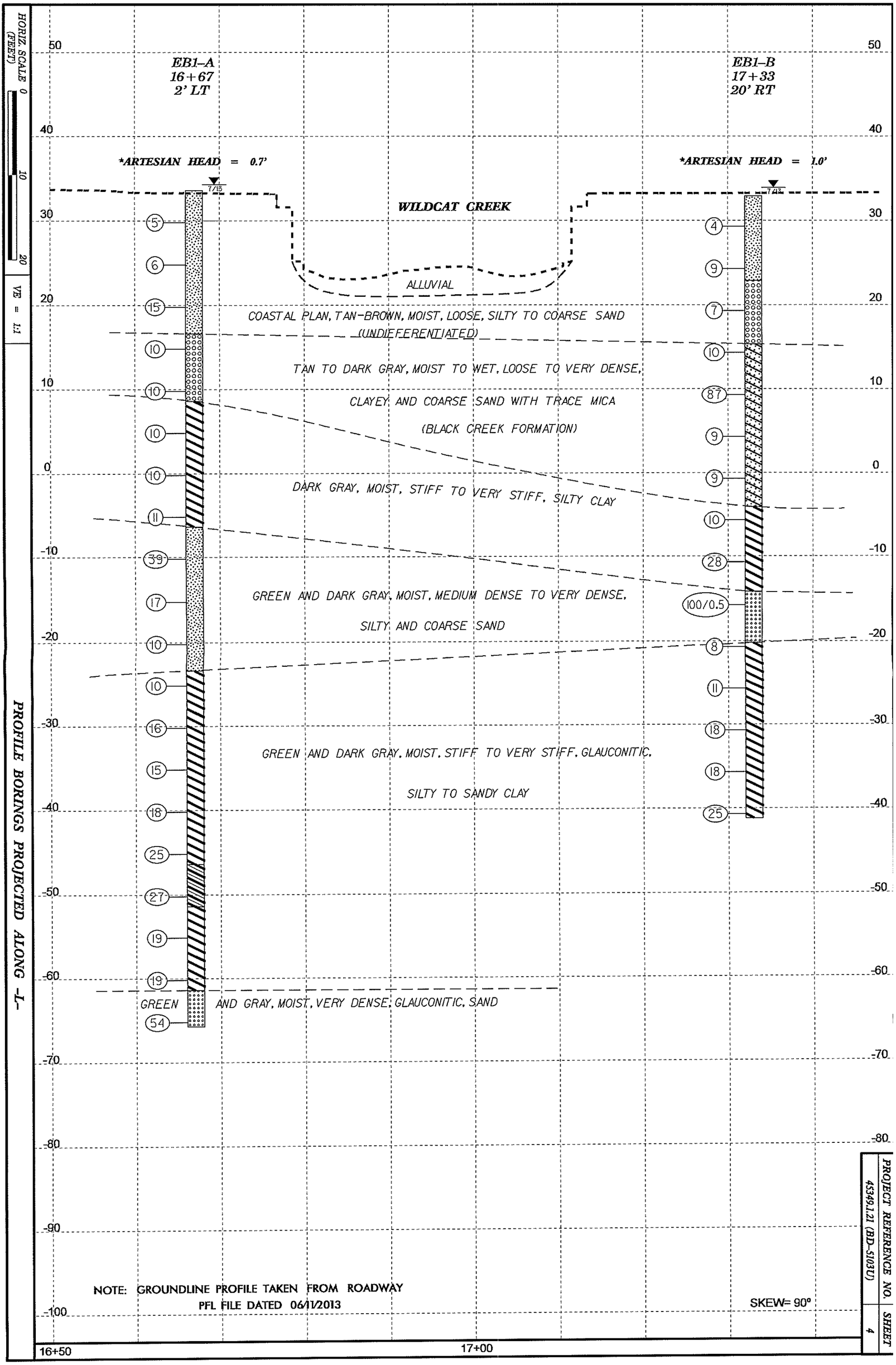
HORIZ. SCALE (FEET)
0
10
20
VE = 1:1
PROFILE BORINGS PROJECTED ALONG -L-
EB1-A
16+67
2' LT
EB1-B
17+33
20' RT
*ARTESIAN HEAD = 0.7'
*ARTESIAN HEAD = 1.0'
718
743
WILDCAT CREEK
ALLUVIAL
COASTAL PLAN, TAN-BROWN, MOIST, LOOSE, SILTY TO COARSE SAND
(UNDIFFERENTIATED)
TAN TO DARK GRAY, MOIST TO WET, LOOSE TO VERY DENSE,
CLAYEY AND COARSE SAND WITH TRACE MICA
(BLACK CREEK FORMATION)
DARK GRAY, MOIST, STIFF TO VERY STIFF, SILTY CLAY
GREEN AND DARK GRAY, MOIST, MEDIUM DENSE TO VERY DENSE,
SILTY AND COARSE SAND
GREEN AND DARK GRAY, MOIST, STIFF TO VERY STIFF, GLAUCONITIC,
SILTY TO SANDY CLAY
GREEN AND GRAY, MOIST, VERY DENSE, GLAUCONITIC, SAND
50
40
30
20
10
0
-10
-20
-30
-40
-50
-60
-70
-80
-90
-100
5
6
15
10
10
10
10
11
39
17
10
10
16
15
18
25
27
19
19
54
4
9
7
10
87
9
9
10
28
100/0.5
8
11
18
18
25
NOTE: GROUNDLINE PROFILE TAKEN FROM ROADWAY
PFL FILE DATED 06/11/2013
SKEW= 90°
16+50
17+00
PROJECT REFERENCE NO.
45349.1.21 (BD-5103U)
SHEET
4

NCDOT GEOTECHNICAL ENGINEERING UNIT
BORELOG REPORT

WBS 45349.1.21	**TIP** BD-5103U	**COUNTY** SAMPSON	**GEOLOGIST** Oti, O. B.	
SITE DESCRIPTION BRIDGE NO. 38 ON SR 1007 (WILDCAT ROAD) OVER WILDCAT CREEK				**GROUND WTR (ft)**
BORING NO. EB1-A	**STATION** 16+67	**OFFSET** 2 ft LT	**ALIGNMENT** -L-	**0 HR.** N/A
COLLAR ELEV. 33.6 ft	**TOTAL DEPTH** 99.3 ft	**NORTHING** 339,542	**EASTING** 2,232,918	**24 HR.** ARTESIAN
DRILL RIG/HAMMER EFF./DATE RFO0074 CME-55 91% 12/18/2012		**DRILL METHOD** Mud Rotary		**HAMMER TYPE** Automatic
DRILLER Conley, H. R.	**START DATE** 07/16/13	**COMP. DATE** 07/17/13	**SURFACE WATER DEPTH** N/A	

ELEV (ft)	DRIVE ELEV (ft)	DEPTH (ft)	BLOW COUNT 0.5ft	0.5ft	0.5ft	BLOWS PER FOOT 0 25 50 75 100	SAMP. NO.	MOI	LOG	SOIL AND ROCK DESCRIPTION — ELEV. (ft)	DEPTH (ft)
35											
										33.6	0.0
										GROUND SURFACE	
										COASTAL PLAIN TAN-BROWN, SILTY SAND (UNDIFFERENTIATED)	
30	30.8	2.8	1	2	3	5		M			
25	25.8	7.8	2	3	3	6		M			
20	20.8	12.8	2	5	10	15		M			
										16.6	17.0
15	15.8	17.8	3	4	6	10		M		TAN TO DARK GRAY, COARSE SAND (BLACK CREEK FORMATION)	
10	10.8	22.8	2	3	7	10		M			
										8.6	25.0
5	5.8	27.8	2	4	6	10		M		DARK GRAY, SILTY CLAY	
0	0.8	32.8	3	4	6	10		M			
-5	-4.2	37.8	3	5	6	11		M			
										-6.4	40.0
-10	-9.2	42.8	14	21	18	39		M		GREEN AND DARK GRAY, GLAUCONITIC, SILTY SAND	
-15	-14.2	47.8	4	6	11	17		M			
-20	-19.2	52.8	3	4	6	10		M			
										-23.4	57.0
-25	-24.2	57.8	3	4	6	10		M		DARK GRAY, SILTY CLAY	
-30	-29.2	62.8	3	6	10	16		M			
-35	-34.2	67.8	5	6	9	15		M			
-40	-39.2	72.8	5	7	11	18		M			
-45	-44.2	77.8	8	12	13						

WBS 45349.1.21	**TIP** BD-5103U	**COUNTY** SAMPSON	**GEOLOGIST** Oti, O. B.	
SITE DESCRIPTION BRIDGE NO. 38 ON SR 1007 (WILDCAT ROAD) OVER WILDCAT CREEK				**GROUND WTR (ft)**
BORING NO. EB1-A	**STATION** 16+67	**OFFSET** 2 ft LT	**ALIGNMENT** -L-	**0 HR.** N/A
COLLAR ELEV. 33.6 ft	**TOTAL DEPTH** 99.3 ft	**NORTHING** 339,542	**EASTING** 2,232,918	**24 HR.** ARTESIAN
DRILL RIG/HAMMER EFF./DATE RFO0074 CME-55 91% 12/18/2012		**DRILL METHOD** Mud Rotary		**HAMMER TYPE** Automatic
DRILLER Conley, H. R.	**START DATE** 07/16/13	**COMP. DATE** 07/17/13	**SURFACE WATER DEPTH** N/A	

ELEV (ft)	DRIVE ELEV (ft)	DEPTH (ft)	BLOW COUNT 0.5ft	0.5ft	0.5ft	BLOWS PER FOOT 0 25 50 75 100	SAMP. NO.	MOI	LOG	SOIL AND ROCK DESCRIPTION
-45						Match Line		M		-46.4 DARK GRAY, SILTY CLAY *(continued)* 80.0
-50	-49.2	82.8	10	10	17	25 27		M		DARK GRAY, SANDY CLAY
-55	-54.2	87.8	5	8	11	19		M		-51.4 85.0 DARK GRAY, SILTY CLAY
-60	-59.2	92.8	5	9	10	19		M		-61.4 95.0 GREEN AND GRAY, SAND
-65	-64.2	97.8	10	15	39	54		M		-65.7 99.3 Boring Terminated at Elevation -65.7 ft in SAND (BLACK CREEK FORMATION)

NCDOT BORE DOUBLE BD5103U_GEO_BRDG0038_BH.GPJ NC_DOT.GDT 7/18/13

WBS 45349.1.21	**TIP** BD-5103U	**COUNTY** SAMPSON	**GEOLOGIST** Oti, O. B.
SITE DESCRIPTION BRIDGE NO. 38 ON SR 1007 (WILDCAT ROAD) OVER WILDCAT CREEK			**GROUND WTR (ft)**
BORING NO. EB2-B	**STATION** 17+33	**OFFSET** 20 ft RT	**ALIGNMENT** -L- / **0 HR.** N/A
COLLAR ELEV. 32.9 ft	**TOTAL DEPTH** 74.1 ft	**NORTHING** 339,600	**EASTING** 2,232,958 / **24 HR.** ARTESIAN
DRILL RIG/HAMMER EFF./DATE RFO0074 CME-55 91% 12/18/2012		**DRILL METHOD** Mud Rotary	**HAMMER TYPE** Automatic
DRILLER Conley, H. R.	**START DATE** 07/11/13	**COMP. DATE** 07/15/13	**SURFACE WATER DEPTH** N/A

ELEV (ft)	DRIVE ELEV (ft)	DEPTH (ft)	BLOW COUNT 0.5ft	0.5ft	0.5ft	BLOWS PER FOOT 0 25 50 75 100	SAMP. NO.	MOI	LOG	SOIL AND ROCK DESCRIPTION
35										32.9 GROUND SURFACE 0.0
30	30.3	2.6	1	2	2	4		M		**COASTAL PLAIN** TAN-BROWN, SILTY SAND (UNDIFFERENTIATED)
25	25.3	7.6	1	4	5	9		M		22.9 10.0 TAN-BROWN, COARSE SAND
20	20.3	12.6	2	3	4	7		M		
15	15.3	17.6	3	5	5	10		M		15.3 17.6 DARK GRAY, CLAYEY SAND WITH TRACE MICA (BLACK CREEK FORMATION)
10	10.3	22.6	2	3	84	87		M		
5	5.3	27.6	3	4	5	9		M		
0	0.3	32.6	3	4	5	9		M		
-5	-4.7	37.6	3	5	5	10		M		-4.1 37.0 DARK GRAY, SILTY CLAY
-10	-9.7	42.6	14	16	12	28		M		
-15	-14.7	47.6	28	50	50/0.0	100/0.5		M		-14.1 47.0 GREEN AND GRAY, GLAUCONITIC, SAND
-20	-19.7	52.6	2	4	4	8		M		-20.2 53.1 GREEN AND DARK GRAY, GLAUCONITIC, SILTY CLAY
-25	-24.7	57.6	3	5	6	11		M		
-30	-29.7	62.6	5	8	10	18		M		
-35	-34.7	67.6	5	8	10	18		M		
-40	-39.7	72.6	5	10	15	25		M		-41.2 74.1 Boring Terminated at Elevation -41.2 ft in SILTY CLAY (BLACK CREEK FORMATION)