NCDOT DIVISION III MULTI-UNIT BUILDING

BID SET - 05 FEBRUARY 2018

SCO ID #: 15-12499-02A

CASTLE HAYNE SITE - 5501 BARBADOS BLVD.
CASTLE HAYNE, NORTH CAROLINA 28429

NC DEPARTMENT OF TRANSPORTATION
HIGHWAY DIVISION 3

DESIGNERS:

ARCHITECT OF RECORD

BURNETTE • CHALK ARCHITECTURE & PLANNING, P.A. (252) 726-5387
MARGARET KELLUM CHALK, AIA, NCARB mkc@burnchalk.com
105 BANKS STREET
MOREHEAD CITY, NORTH CAROLINA 28557

STRUCTURAL ENGINEER OF RECORD

MICHAEL D. MOUNTCASTLE, P.E. (919) 707-4547
NORTH CAROLINA DEPARTMENT OF TRANSPORTATION mdmountcastle@ncdot.gov
FACILITIES MANAGEMENT DIVISION

CIVIL ENGINEER OF RECORD

RICHARD BROWN, P.E., STROUD ENGINEERING, P.A. (252) 756-9352
rbrown@stroudengineer.com

PLUMBING / MECHANICAL / ELECTRICAL ENGINEERS OF RECORD

MICHAEL STROUD, P.E., STROUD ENGINEERING, P.A. (252) 756-9352
mstroud@stroudengineer.com

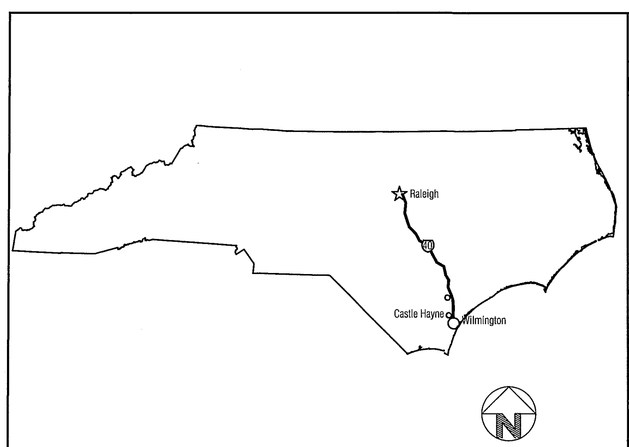

LOCATION MAP

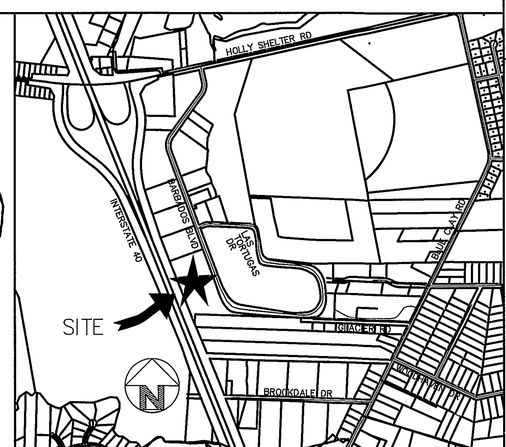

VICINITY MAP

DRAWING INDEX

T1.0 COVER SHEET
T2.0 BUILDING CODE SUMMARY: APPENDIX B
T2.1 LIFE SAFETY PLAN

CIVIL/SITE

1of 1 EXISTING CONDITIONS SURVEY
C1 SITE PLAN
C2 GRADING PLAN
C3 WATERS OF THE US IMPACT MAP
C4 UTILITY PLAN
C5 VEGETATION PLAN
C6 DETAILS
SSD-2 CFPUA SANITARY SEWER – STANDARD DETAILS
WSD-1 CFPUA WATER DISTRIBUTION SYSTEM – STANDARD DETAILS

ARCHITECTURAL

A1.1 FLOOR PLAN
A1.2 REFLECTED CEILING PLAN
A1.3 ROOF PLAN
A2.1 EXTERIOR ELEVATIONS
A3.1 BUILDING SECTIONS
A3.2 BUILDING SECTIONS
A3.3 WALL SECTIONS
A4.1 DOOR & WINDOW DETAILS
A4.2 ROOM FINISH SCHEDULES/INTERIOR ELEVATIONS
A4.3 DETAILS

STRUCTURAL

S1 FOUNDATION PLAN & DETAILS
S2 FRAMING PLAN & DETAILS
S3 DETAILS & GENERAL NOTES

PLUMBING

P1 OF 4 PLUMBING COVER
P2 OF 4 PLUMBING DWV & WATER PLAN
P3 OF 4 PLUMBING SCHEDULES & DETAILS
P4 OF 4 PLUMBING NATURAL GAS PLAN & ISOMETRIC

MECHANICAL

M1 OF 4 MECHANICAL COVER
M2 OF 4 MECHANICAL PLAN
M3 OF 4 MECHANICAL ENLARGED PLAN AND SECTIONS
M4 OF 4 MECHANICAL DETAILS, SCHEDULES, AND SEQUENCE OF OPERATION

ELECTRICAL

E1 OF 7 SITE ELECTRICAL LIGHTING PLAN & RISER
E2 OF 7 ELECTRICAL PLAN
E3 OF 7 COMMUNICATIONS & SECURITY PLAN
E4 OF 7 LIGHTING PLAN
E5 OF 7 ELECTRICAL SCHEDULES
E6 OF 7 PANEL SCHEDULES
E7 OF 7 ELECTRICAL DETAILS

ABBREVIATIONS AND SYMBOLS

EARTH
OTHER SOIL, MULCH
POROUS FILL, GRAVEL
BRICK, OTHER MATL
CMU
CONCRETE
BATT INSULATION
RIGID INSULATION
FIBER CEMENT BOARD
FINISH WOOD
ROUGH WOOD CONTINUOUS
ROUGH WOOD BLOCKING
PLYWOOD, OSB
STEEL, METAL
GYPSUM BOARD, OTHER MATERIAL
GLASS, GLAZING
ACOUSTICAL TILE

E6 / A1 DETAIL NUMBER / SHEET NUMBER
3 KEYED NOTE
203 ROOM NUMBER
101A DOOR MARK
B WINDOW MARK
CENTER LINE, DATUM LINE
HIDDEN LINE
D DOOR OPERATOR
BREAK LINE
PROPERTY LINE
269 EXISTING CONTOUR
269 NEW CONTOUR
SILT FENCE
SPOT ELEVATION OR DATUM
B1 SOIL BORING NO. 1
DS DOWNSPOUT

∠	ANGLE, LENGTH
AL	ALUMINUM
AB	ANCHOR BOLT
AFF	ABOVE FINISH FLOOR
ALT	ALTERNATE
APRX	APPROXIMATE
ARCH	ARCHITECTURAL
AVG	AVERAGE
BB	BACK TO BACK
BSMT	BASEMENT
BRG	BEARING
BM	BENCHMARK
BLKG	BLOCKING
BD	BOARD
BLDG	BUILDING
CAB	CABINET
CANTL	CANTILEVER
CB	CATCH BASIN
C&G	CURB AND GUTTER
CIP	CAST IRON PIPE
CJ	CONTROL JT, CEILING JST
℄	CENTERLINE
CL	CLOSET
CLR AN	CLEAR ANODIZED
CLG	CEILING
CLKG	CAULKING
CMU	CONCRETE MASONRY UNIT
COL	COLUMN
CONC	CONCRETE
CONT	CONTINUOUS
CRS	COURSES
D	DEEP, DEPTH
DBL	DOUBLE
DET	DETAIL
DIA	DIAMETER
DIAG	DIAGONAL
DIM	DIMENSION
DN	DOWN
DS	DOWNSPOUT
EA	EACH
EW	EACH WAY
EWC	ELECTRIC WATER COOLER
ELEC	ELECTRICAL
EL	ELEVATION
ELEV	ELEVATOR
EXIST	EXISTING
EJ	EXPANSION JOINT
EXT	EXTERIOR
EWC	ELECTRIC WATER COOLER
FE	FIRE EXTINGUISHER
FEC	FIRE EXTINGUISHER CABINET
FD	FLOOR DRAIN
FF	FACTORY FINISH
FFE	FINISH FLOOR ELEVATION
FIN FL	FINISH FLOOR
FTG	FOOTING
FV	FIELD VERIFY
FO	FRAME OPENING
FOF	FACE OF FINISH
FOM	FACE OF MASONRY
FOS	FACE OF STUD
FRWR	FIRE–RESISTANT & WATER–RESISTANT
GALV	GALVANIZED
GA	GAUGE
GL	GLASS, GLAZING
GWB	GYPSUM WALL BOARD
GYP	GYPSUM
HB	HOSE BIB
HM	HOLLOW METAL
HORIZ	HORIZONTAL
HPDL	HIGH PRESSURE DECORATIVE LAMINATE
H	HIGH, HEIGHT
INSUL	INSULATION/INSULATED
INT	INTERIOR
INV	INVERT
JC	JANITOR'S CLOSET
JST	JOIST
KF	KERFED FRAME
KP	KEYPAD LOCKSET
KS	KNEE SPACE
LAV	LAVATORY
LB, #	POUND
L	LONG
LLV	LONG LEG VERTICAL
LLH	LONG LEG HORIZONTAL
MFR	MANUFACTURER
MH	MANHOLE
MO	MASONRY OPENING
MATL	MATERIAL
MAX	MAXIMUM
MIN	MINIMUM
MTD	MOUNTED
MLD	MOULDING
NIC	NOT IN CONTRACT
NTS	NOT TO SCALE
NO.	NUMBER
OC	ON CENTER
OPNG	OPENING
OPP H	OPPOSITE HAND
OSB	ORIENTED STRAND BOARD
PNL	PANEL
PL LAM	PLASTIC LAMINATE
PL	PLATE
PLMB	PLUMBING
PLWD	PLYWOOD
PREFAB	PREFABRICATED
PSF	POUNDS PER SQ FOOT
PSI	POUNDS PER SQ INCH
R	RISER, ROD
RD	ROOF DRAIN
REF	REFRIGERATOR
REQD	REQUIRED
REV	REVERSED, REVISION
SAC	SUSPENDED ACOUSTICAL TILE
SCT	SUSPENDED CEILING TILE
SAN	SANITARY
SECT	SECTION
SFGL	SAFTY GLASS
SH	SHELF, SHELVES
SHT	SHEET
SHTG	SHEATHING
SIM	SIMILAR
SPEC	SPECIFICATION
SQ	SQUARE
SS	STAINLESS STEEL, SANITARY SEWER
STD	STANDARD
STL	STEEL
STO	STORAGE
T	TREAD
TEMP	TEMPERED
T&G	TONGUE AND GROOVE
TLT	TOILET
TOF	TOP OF FOOTING
TOJ	TOP OF JOIST
TOM	TOP OF MASONRY
TOS	TOP OF STEEL
TOW	TOP OF WALL
TRTD	TREATED
TYP	TYPICAL
UNFIN	UNFINISHED
UON	UNLESS OTHERWISE NOTED
VERT	VERTICAL
W	WIDE, WIDTH
W/	WITH
WWF	WOVEN WIRE FABRIC
WC	WATER COOLER
WD	WOOD

FACILITIES DESIGN ARCHITECTS & ENGINEERS
FACILITIES MANAGEMENT DIVISION, NCDOT
1 SOUTH WILMINGTON STREET
RALEIGH, NORTH CAROLINA 27601
PHONE919/707-4540 FAX919/715-0399
STATE OF NORTH CAROLINA DEPARTMENT OF TRANSPORTATION
NORTH CAROLINA REGISTERED ARCHITECTURAL FIRM 52961

BURNETTE • CHALK ARCHITECTURE & PLANNING, P.A.
105 BANKS STREET MOREHEAD CITY, NC 28557
252-726-5387 252-726-3092 fax 252-726-1250 info@burnchalk.com

KENNETH W. BURNETTE REGISTERED ARCHITECT 3092 NORTH CAROLINA MOREHEAD CITY, N.C. 5 Feb 2018

MARGARET KELLUM CHALK REGISTERED ARCHITECT 11814 NORTH CAROLINA MOREHEAD CITY, NC 5 Feb 2018

CONSULTANTS:

REVISIONS:

NCDOT DIVISION III MULTI-UNIT BUILDING
CASTLE HAYNE SITE - 5501 BARBADOS BLVD.
CASTLE HAYNE, NORTH CAROLINA 28429
SCO# 15-12499-02A
COVER SHEET

PROJECT #16005
DRAWN: CHH
CHECKED: MKC
APPROVED: OWNER
DATE: 05 FEB 2018
PHASE: CD

T1.0

these drawings and specifications represent an instrument of service and as such shall remain in ownership with the architect. use or reproduction by any means, in whole or in part, without the architect's consent, is prohibited.

\\Bfpserver\data\acad\wg\16005 NCDOT Division III Castle Hayne Office Building\Drawings\Construction Documents\001 - Castle Hayne - T1.0 - Cover Sheet.dwg, Layout1, 2/7/2018 10:02:49 AM, 1:1

2012 APPENDIX B
BUILDING CODE SUMMARY
FOR ALL COMMERCIAL PROJECTS

NAME OF PROJECT: NCDOT DIVISION III MULTI-UNIT BUILDING
ADDRESS: 5501 BARBADOS BOULEVARD, CASTLE HAYNE, NORTH CAROLINA ZIP CODE: 28429
PROPOSED USE:
OWNER/AUTHORIZED AGENT: STERLING BAKER PHONE #: (919) 707-4552 EMAIL: sbaker@ncdot.gov
OWNED BY: ☐ CITY/COUNTY ☐ PRIVATE ☒ STATE
CODE ENFORCEMENT JURISDICTION: ☐ CITY ☐ COUNTY ☒ STATE

LEAD DESIGN PROFESSIONAL: Burnette - Chalk Architecture & Planning, PA - Margaret K. Chalk

DESIGNER	FIRM	NAME	LICENSE	TELEPHONE	EMAIL
ARCHITECTURAL	Burnette - Chalk	Maggie Chalk	11614	(252) 726-3099	mkc@burnchalk.com
CIVIL	Stroud Engineering	Richie Brown	C-0847	(252) 756-9352	rbrown@stroudengineer.com
ELECTRICAL	Stroud Engineering	Mike Stroud	21990	(252) 756-9352	msdroud@stroudengineer.com
FIRE ALARM	N/A				
PLUMBING	Stroud Engineering	Mike Stroud	21990	(252) 756-9352	msdroud@stroudengineer.com
MECHANICAL	Stroud Engineering	Mike Stroud	21990	(252) 756-9352	msdroud@stroudengineer.com
SPRINKLER/STANDPIPE	N/A				
STRUCTURAL	NCDOT Facilities Design	Mike Mountcastle	17326	(919) 707-4547	mdmountcastle@ncdot.gov
RETAINING WALLS > 5' HIGH	N/A				
OTHER	N/A				

2012 EDITION OF NC CODE FOR:
EXISTING: ☐ RECONSTRUCTION ☒ NEW CONSTRUCTION ☐ ADDITION ☐ UPFIT
CONSTRUCTED: (DATE) ☐ ALTERATION ☐ REPAIR ☐ RENOVATION
RENOVATED: (DATE)
ORIGINAL USE(S) (CH. 3):
CURRENT USE(S) (CH. 3):
PROPOSED USE(S) (CH. 3):

BASIC BUILDING DATA

CONSTRUCTION TYPE: (CHECK ALL THAT APPLY) ☐ I-A ☐ I-B ☐ II-A ☐ II-B ☐ III-A ☐ III-B ☐ IV ☐ V-A ☒ V-B

SPRINKLERS: ☒ NO ☐ PARTIAL ☐ YES
STANDPIPES: ☒ NO ☐ YES CLASS ☐ I ☐ II ☐ III
FIRE DISTRICT: ☒ NO ☐ YES (PRIMARY)
BUILDING HEIGHT: FEET 23'-6"
☐ NFPA 13 ☐ NFPA 13R ☐ NFPA 13D ☐ WET ☐ DRY
FLOOD HAZARD AREA: ☒ NO ☐ YES

GROSS BUILDING AREA:

FLOOR	EXISTING (SQ FT)	NEW (SQ FT)	SUB-TOTAL
6TH FLOOR			
5TH FLOOR			
4TH FLOOR			
3RD FLOOR			
2ND FLOOR			
MEZZANINE			
1ST FLOOR	0	5669	5669
TOTAL	0	5669	5669

ALLOWABLE AREA

OCCUPANCY:
ASSEMBLY ☐ A-1 ☐ A-2 ☐ A-3 ☐ A-4 ☐ A-5
BUSINESS ☒
EDUCATIONAL ☐
FACTORY ☐ F-1 MODERATE ☐ F-2 LOW
HAZARDOUS ☐ H-1 DETONATE ☐ H-2 DEFLAGRATE ☐ H-3 COMBUST ☐ H-4 HEALTH ☐ H-5 HPM
INSTITUTIONAL ☐ I-1 ☐ I-2 ☐ I-3 ☐ I-4
I-3 CONDITION ☐ 1 ☐ 2 ☐ 3 ☐ 4 ☐ 5
MERCANTILE ☐
RESIDENTIAL ☐ R-1 ☐ R-2 ☐ R-3 ☐ R-4
STORAGE ☐ S-1 MODERATE ☐ S-2 LOW ☐ HIGH-PILED
☐ PARKING GARAGE ☐ OPEN ☐ ENCLOSED ☐ REPAIR GARAGE
UTILITY AND MISCELLANEOUS ☐

ACCESSORY OCCUPANCIES: (NONE)
ASSEMBLY ☐ A-1 ☐ A-2 ☐ A-3 ☐ A-4 ☐ A-5
BUSINESS ☐
EDUCATIONAL ☐
FACTORY ☐ F-1 MODERATE ☐ F-2 LOW
HAZARDOUS ☐ H-1 DETONATE ☐ H-2 DEFLAGRATE ☐ H-3 COMBUST ☐ H-4 HEALTH ☐ H-5 HPM
INSTITUTIONAL ☐ I-1 ☐ I-2 ☐ I-3 ☐ I-4
I-3 CONDITION ☐ 1 ☐ 2 ☐ 3 ☐ 4 ☐ 5
MERCANTILE ☐
RESIDENTIAL ☐ R-1 ☐ R-2 ☐ R-3 ☐ R-4
STORAGE ☐ S-1 MODERATE ☐ S-2 LOW ☐ HIGH-PILED
☐ PARKING GARAGE ☐ OPEN ☐ ENCLOSED ☐ REPAIR GARAGE
UTILITY AND MISCELLANEOUS ☐

INCIDENTAL USES (TABLE 508.2.5): (NONE)
☐ FURNACE ROOM WHERE ANY PIECE OF EQUIPMENT IS OVER 400,000 BTU PER HOUR INPUT
☐ ROOMS WITH BOILERS WHERE THE LARGEST PIECE OF EQUIPMENT IS OVER 15 PSI AND 10 HORSEPOWER
☐ REFRIGERANT MACHINE ROOM
☐ HYDROGEN CUTOFF ROOMS, NOT CLASSIFIED AS GROUP H
☐ INCINERATOR ROOMS
☐ PAINT SHOPS, NOT CLASSIFIED AS GROUP H, LOCATED IN OCCUPANCIES OTHER THAN GROUP F
☐ LABORATORIES AND VOCATIONAL SHOPS, NOT CLASSIFIED AS GROUP H, LOCATED IN A GROUP E OR I-2 OCCUPANCY
☐ LAUNDRY ROOMS OVER 100 SQUARE FEET
☐ GROUP I-3 CELLS EQUIPPED WITH PADDED SURFACES
☐ GROUP I-2 WASTE AND LINEN COLLECTION ROOMS
☐ WASTE AND LINEN COLLECTION ROOMS OVER 100 SQUARE FEET
☐ STATIONARY STORAGE BATTERY SYSTEMS HAVING A LIQUID ELECTROLYTE CAPACITY OF MORE THAN 50 GALLONS, OR A LITHIUM-ION CAPACITY OF 1,000 POUNDS USED FOR FACILITY STANDBY POWER, EMERGENCY POWER OR UNINTERRUPTED POWER SUPPLIES
☐ ROOMS CONTAINING FIRE PUMPS
☐ GROUP I-2 STORAGE ROOMS OVER 100 SQUARE FEET
☐ GROUP I-2 COMMERCIAL KITCHENS
☐ GROUP I-2 LAUNDRIES EQUAL TO OR LESS THAN 100 SQUARE FEET
☐ GROUP I-2 ROOMS OR SPACES THAT CONTAIN FUEL-FIRED HEATING EQUIPMENT

SPECIAL USES: (NONE)
☐ 402 ☐ 403 ☐ 404 ☐ 405 ☐ 406 ☐ 407 ☐ 408 ☐ 409 ☐ 410 ☐ 411 ☐ 412
☐ 413 ☐ 414 ☐ 415 ☐ 416 ☐ 417 ☐ 418 ☐ 419 ☐ 420 ☐ 421 ☐ 422 ☐ 423 ☐ 424
☐ 425 ☐ 426 ☐ 427

SPECIAL PROVISIONS: (NONE) ☐ 509.2 ☐ 509.3 ☐ 509.4 ☐ 509.5 ☐ 509.6 ☐ 509.7 ☐ 509.8 ☐ 509.9

MIXED OCCUPANCY: ☒ NO ☐ YES SEPARATION: _____ HR. EXCEPTION: _____

☐ INCIDENTAL USE SEPARATION (508.2.5)
THIS SEPARATION IS NOT EXEMPT AS A NON-SEPARATED USE (SEE EXCEPTIONS).

☐ NON-SEPARATED USE (508.3.)
THE REQUIRED TYPE OF CONSTRUCTION FOR THE BUILDING SHALL BE DETERMINED BY APPLYING THE HEIGHT AND AREA LIMITATIONS FOR EACH OF THE APPLICABLE OCCUPANCIES TO THE ENTIRE BUILDING. THE MOST RESTRICTIVE TYPE OF CONSTRUCTION, SO DETERMINED, SHALL APPLY TO THE ENTIRE BUILDING.

☐ SEPARATED USE (508.4) - SEE BELOW FOR AREA CALCULATIONS
FOR EACH STORY, THE AREA OF THE OCCUPANCY SHALL BE SUCH THAT THE SUM OF THE RATIOS OF THE ACTUAL FLOOR AREA OF EACH USE DIVIDED BY THE ALLOWABLE FLOOR AREA FOR EACH USE & SHALL NOT EXCEED 1.

$$\frac{\text{ACTUAL AREA OF OCCUPANCY A}}{\text{ALLOWABLE AREA OF OCCUPANCY A}} + \frac{\text{ACTUAL AREA OF OCCUPANCY B}}{\text{ALLOWABLE AREA OF OCCUPANCY B}} \leq 1.00$$

$$\frac{\quad}{\quad} + \frac{\quad}{\quad} + \ldots = \frac{\quad}{\quad} \leq 1.00$$

STORY NO	DESCRIPTION AND USE	(A) BLDG AREA PER STORY (ACTUAL)	(B) TABLE 503 [5] AREA	(C) AREA FOR FRONTAGE INCREASE [1]	(D) AREA FOR SPRINKLER INCREASE [2]	(E) ALLOWABLE AREA OR UNLIMITED [3]	(F) MAXIMUM BUILDING AREA [4]
1	OFFICE	5669	9000	N/A	N/A	N/A	N/A

1. FRONTAGE AREA INCREASES FROM SECTION 506.2 AREA COMPUTED THUS:
   A. PERIMETER WHICH FRONTS A PUBLIC WAY OR OPEN SPACE HAVING 20 FT MIN. WIDTH = _____ (F)
   B. TOTAL BUILDING PERIMETER = _____ (P)
   C. RATIO (F/P) = _____ (F/P)
   D. W = MINIMUM WIDTH OF PUBLIC WAY = _____ (W)
   E. PERCENT OF FRONTAGE INCREASE $I_f = 100 [F/P - 0.25] \times W / 30$ = _____ (%)
2. THE SPRINKLER INCREASE PER SECTION 506.3 IS AS FOLLOWS:
   A. MULTI-STORY BUILDING I_s = 200 PERCENT
   B. SINGLE STORY BUILDING I_s = 300 PERCENT
3. UNLIMITED AREA APPLICABLE UNDER CONDITIONS OF SECTIONS (507).
4. MAXIMUM BUILDING AREA = TOTAL NUMBER OF STORIES IN THE BUILDING $\times E$ (506.4)
5. THE MAXIMUM AREA OF OPEN PARKING GARAGES MUST COMPLY WITH TABLE 406.3.5. THE MAXIMUM AREA OF AIR TRAFFIC CONTROL TOWERS MUST COMPLY WITH TABLE 412.1.2.

ALLOWABLE HEIGHT

	ALLOWABLE (TABLE 503)	INCREASE FOR SPRINKLERS		SHOWN ON PLANS	CODE REFERENCE
TYPE OF CONSTRUCTION	TYPE 5-B			TYPE 5-B	602.5
BUILDING HEIGHT IN FEET	40	FEET = H + 20'	N/A	23'-6"	T. 503
BUILDING HEIGHT IN STORIES	2	STORIES + 1	N/A	STORIES 1	T. 503

FIRE PROTECTION REQUIREMENTS

BUILDING ELEMENT	FIRE SEPARATION DISTANCE (FEET)	RATING REQ'D	RATING PROVIDED (W/_____* REDUCTION)	DETAIL # AND SHEET #	DESIGN # FOR RATED ASSEMBLY	DESIGN # FOR RATED PENETRATION	DESIGN # FOR RATED JOINTS
STRUCTURAL FRAME, INCLUDING COLUMNS, GIRDERS, TRUSSES	>30	0	0				
BEARING WALLS							
EXTERIOR							
NORTH	>30	0	0				
EAST	>30	0	0				
WEST	>30	0	0				
SOUTH	>30	0	0				
INTERIOR	>30	0	0				
NONBEARING WALLS AND PARTITIONS							
EXTERIOR WALLS							
NORTH	>30	0	0				
EAST	>30	0	0				
WEST	>30	0	0				
SOUTH	>30	0	0				
INTERIOR WALLS & PARTITIONS	N/A	0	0				
FLOOR CONSTRUCTION INCLUDING SUPPORTING BEAMS AND JOIST	>30	0	0				
ROOF CONSTRUCTION INCLUDING SUPPORTING BEAMS AND JOIST	>30	0	0				
SHAFT ENCLOSURES - EXIT	N/A						
SHAFT ENCLOSURES - OTHER	N/A						
CORRIDOR SEPARATION	N/A						
OCCUPANCY SEPARATION	N/A						
PARTY/FIRE WALL SEPARATION	N/A						
SMOKE BARRIER SEPARATION	N/A						
TENANT SEPARATION	N/A						
INCIDENTAL USE SEPARATION	N/A						

* INDICATE SECTION NUMBER PERMITTING REDUCTION

LIFE SAFETY SYSTEM REQUIREMENTS

EMERGENCY LIGHTING: ☐ NO ☒ YES
EXIT SIGNS: ☐ NO ☒ YES
FIRE ALARM: ☒ NO ☐ YES
SMOKE DETECTION SYSTEMS: ☒ NO ☐ YES ☐ PARTIAL
PANIC HARDWARE: ☐ NO ☒ YES

LIFE SAFETY PLAN REQUIREMENTS

LIFE SAFETY PLAN SHEET #: REFER TO SHEET T2.1
☐ FIRE AND/OR SMOKE RATED WALL LOCATIONS (CHAPTER 7)
☒ ASSUMED AND REAL PROPERTY LINE LOCATIONS
☒ EXTERIOR WALL OPENING AREA WITH RESPECT TO DISTANCE TO ASSUMED PROPERTY LINES (705.8)
☒ EXISTING STRUCTURES WITHIN 30' OF PROPOSED BUILDING
☒ OCCUPANCY TYPES FOR EACH AREA AS IT RELATES TO OCCUPANT LOAD CALCULATION (TABLE 1004.1.1)
☒ OCCUPANT LOADS FOR EACH AREA
☒ EXIT ACCESS TRAVEL DISTANCES (1016)
☐ COMMON PATH OF TRAVEL DISTANCES (1014.3 & 1028.8)
☐ DEAD END LENGTHS (1018.4)
☒ CLEAR EXIT WIDTHS FOR EACH EXIT DOOR
☒ MAXIMUM CALCULATED OCCUPANT LOAD CAPACITY EACH EXIT DOOR CAN ACCOMMODATE BASED ON EGRESS WIDTH (1005.1)
☒ ACTUAL OCCUPANT LOAD FOR EACH EXIT DOOR
☐ A SEPARATE SCHEMATIC PLAN INDICATING WHERE FIRE RATED FLOOR/CEILING AND/OR ROOF STRUCTURE IS PROVIDED FOR PURPOSES OF OCCUPANCY SEPARATION
☒ LOCATION OF DOORS WITH PANIC HARDWARE (1008.1.10)
☐ LOCATION OF DOORS WITH DELAYED EGRESS LOCKS AND THE AMOUNT OF DELAY (1008.1.9.7)
☐ LOCATION OF DOORS WITH ELECTROMAGNETIC EGRESS LOCKS (1008.1.9.8)
☐ LOCATION OF DOORS EQUIPPED WITH HOLD-OPEN DEVICES
☐ LOCATION OF EMERGENCY ESCAPE WINDOWS (1029)
☐ THE SQUARE FOOTAGE OF EACH FIRE AREA (902)
☐ THE SQUARE FOOTAGE OF EACH SMOKE COMPARTMENT (407.4)
☐ NOTE ANY CODE EXCEPTIONS OR TABLE NOTES THAT MAY HAVE BEEN UTILIZED REGARDING THE ITEMS ABOVE

ACCESSIBLE DWELLING UNITS (NOT APPLICABLE)

(SECTION 1107)

TOTAL UNITS	ACCESSIBLE UNITS REQUIRED	ACCESSIBLE UNITS PROVIDED	TYPE A UNITS REQUIRED	TYPE A UNITS PROVIDED	TYPE B UNITS REQUIRED	TYPE B UNITS PROVIDED	TOTAL ACCESSIBLE UNITS PROVIDED

ACCESSIBLE PARKING

(SECTION 1106)

LOT OR PARKING AREA	TOTAL # OF PARKING SPACES REQUIRED	TOTAL # OF PARKING SPACES PROVIDED	# OF ACCESSIBLE SPACES PROVIDED: REGULAR WITH 5' ACCESS AISLE	VAN SPACE WITH 132" ACCESS AISLE	VAN SPACE WITH 8' ACCESS AISLE	TOTAL # ACCESSIBLE PROVIDED
NORTH	14	61	3		1	4
TOTAL						

STRUCTURAL DESIGN

DESIGN LOADS:
IMPORTANCE FACTORS:
WIND (I_W) 1
SNOW (I_S) 1
SEISMIC (I_E) 1

LIVE LOADS:
ROOF 20 PSF
MEZZANINE PSF
FLOOR 100 PSF
GROUND SNOW LOAD: 10 PSF

WIND LOAD:
BASIC WIND SPEED 130 MPH (ASCE-7)
EXPOSURE CATEGORY B
WIND BASE SHEARS (FOR MWFRS) V_x = 23.7K V_y = 55.2K

SEISMIC DESIGN CATEGORY ☐ A ☐ B ☒ C ☐ D

PROVIDE THE FOLLOWING SEISMIC DESIGN PARAMETERS:
OCCUPANCY CATEGORY (TABLE 1604.5) ☐ I ☒ II ☐ III ☐ IV
SPECTRAL RESPONSE ACCELERATION S_s 28.0 %g S_1 9.4 %g
SITE CLASSIFICATION (TABLE 1613.5.2) ☐ A ☐ B ☐ C ☒ D ☐ E ☐ F
DATA SOURCE: ☒ FIELD TEST ☐ PRESUMPTIVE ☐ HISTORICAL DATA

BASIC STRUCTURAL SYSTEM (CHECK ONE)
☒ BEARING WALL ☐ DUAL W/SPECIAL MOMENT FRAME
☐ BUILDING FRAME ☐ DUAL W/INTERMEDIATE R/C OR SPECIAL STEEL
☐ MOMENT FRAME ☐ INVERTED PENDULUM
SEISMIC BASE SHEAR V_x = 20.9K V_y = 20.9K
ANALYSIS PROCEDURE ☒ SIMPLIFIED ☐ EQUIVALENT LATERAL FORCE ☐ DYNAMIC
ARCHITECTURAL, MECHANICAL, COMPONENTS ANCHORED ? ☒ YES ☐ NO

LATERAL DESIGN CONTROL: EARTHQUAKE ☐ WIND ☒

SOIL BEARING CAPACITIES:
FIELD TEST (PROVIDE COPY OF TEST REPORT) 2000 PSF
PRESUMPTIVE BEARING CAPACITY PSF
PILE SIZE, TYPE, AND CAPACITY

SPECIAL INSPECTIONS REQUIRED: ☒ YES ☐ NO

PLUMBING FIXTURE REQUIREMENTS (REFER TO PLUMBING DRAWINGS, SHEET P-100)

(TABLE 2902.1)

USE		WATER CLOSETS MALE	WATER CLOSETS FEMALE	URINALS	LAVATORIES MALE	LAVATORIES FEMALE	SHOWERS/ TUBS	DRINKING FOUNTAINS * REGULAR	DRINKING FOUNTAINS * ACCESSIBLE
SPACE	EXISTING	0	0	0	0	0	0	0	0
	NEW	2	2	2	2	1	0	0	1
	REQUIRED	2	2	0	1	1	0	0	1

* PORTABLE WATER DISPENSER WILL BE PROVIDED. *

SPECIAL APPROVALS

SPECIAL APPROVAL:
(LOCAL JURISDICTION, DEPARTMENT OF INSURANCE, OSC, DPI, DHHS, ICC, ETC., DESCRIBE BELOW)

NC DENR STORMWATER PERMIT

ENERGY SUMMARY

ENERGY REQUIREMENTS:

THE FOLLOWING DATA SHALL BE CONSIDERED MINIMUM AND ANY SPECIAL ATTRIBUTE REQUIRED TO MEET THE ENERGY CODE SHALL ALSO BE PROVIDED. EACH DESIGNER SHALL FURNISH THE REQUIRED PORTIONS OF THE PROJECT INFORMATION FOR THE PLAN DATA SHEET. IF PERFORMANCE METHOD, STATE THE ANNUAL ENERGY COST FOR THE STANDARD REFERENCE DESIGN VS. ANNUAL ENERGY COST FOR THE PROPOSED DESIGN.

CLIMATE ZONE: ☒ 3 ☐ 4 ☐ 5

METHOD OF COMPLIANCE:
☒ PRESCRIPTIVE (ENERGY CODE)
☐ PERFORMANCE (ENERGY CODE)
☐ PRESCRIPTIVE (ASHRAE 90.1)
☐ PERFORMANCE (ASHRAE 90.1)

THERMAL ENVELOPE

ROOF/CEILING ASSEMBLY (EACH ASSEMBLY)
DESCRIPTION OF ASSEMBLY VENTED ATTIC, R-38 INSUL, 5/8" GWB
U-VALUE OF TOTAL ASSEMBLY 0.025
R-VALUE OF INSULATION 38
SKYLIGHTS IN EACH ASSEMBLY N/A
U-VALUE OF SKYLIGHT N/A
TOTAL SQUARE FOOTAGE OF SKYLIGHTS IN EACH ASSEMBLY N/A

EXTERIOR WALLS (EACH ASSEMBLY)
DESCRIPTION OF ASSEMBLY BRICK VENEER, AIR SPACE, 1/2" SHTG, 1" RIGID INSULATION, 2X6 WD STD WALL, R-19 INSUL, 5/8" GWB
U-VALUE OF TOTAL ASSEMBLY 0.046
R -VALUE OF INSULATION 19 (Cavity) + 4.5 (CI)
OPENINGS (WINDOWS OR DOORS WITH GLAZING)
U-VALUE OF ASSEMBLY 0.32 (MAX)
SOLAR HEAT GAIN COEFFICIENT 0.33 (MAX)
PROJECTION FACTOR 1.325
DOOR R-VALUES 2.222 (MIN)

WALLS BELOW GRADE (EACH ASSEMBLY)
DESCRIPTION OF ASSEMBLY N/A
U-VALUE OF TOTAL ASSEMBLY N/A
R-VALUE OF INSULATION N/A

FLOORS OVER UNCONDITIONED SPACE (EACH ASSEMBLY)
DESCRIPTION OF ASSEMBLY N/A
U-VALUE OF TOTAL ASSEMBLY N/A
R-VALUE OF INSULATION N/A

FLOORS SLAB ON GRADE
DESCRIPTION OF ASSEMBLY UNHEATED SLAB ON GRADE
U-VALUE OF TOTAL ASSEMBLY N/A
R-VALUE OF INSULATION
HORIZONTAL/VERTICAL REQUIREMENT N/A
SLAB HEATED NONE

MECHANICAL SUMMARY (REFER TO MECHANICAL DRAWINGS)

MECHANICAL SYSTEM, SERVICE SYSTEMS AND EQUIPMENT

THERMAL ZONE
WINTER DRY BULB:
SUMMER DRY BULB:

INTERIOR DESIGN CONDITIONS
WINTER DRY BULB:
SUMMER DRY BULB:
RELATIVE HUMIDITY:

BUILDING HEATING LOAD:

BUILDING COOLING LOAD:

MECHANICAL SPACING CONDITIONING SYSTEM
UNITARY
DESCRIPTION OF UNIT:
HEATING EFFICIENCY:
COOLING EFFICIENCY:
SIZE CATEGORY OF UNIT:

BOILER
SIZE CATEGORY. IF OVERSIZED, STATE REASON.

CHILLER
SIZE CATEGORY. IF OVERSIZED, STATE REASON.

LIST EQUIPMENT EFFICIENCIES

ELECTRICAL SUMMARY (REFER TO ELECTRICAL DRAWINGS)

ELECTRICAL SYSTEM AND EQUIPMENT
METHOD OF COMPLIANCE:
ENERGY CODE ☐ PRESCRIPTIVE ☐ PERFORMANCE
ASHRAE 90.1 ☐ PRESCRIPTIVE ☐ PERFORMANCE

LIGHTING SCHEDULE (EACH FIXTURE TYPE)
LAMP TYPE REQUIRED IN FIXTURE
NUMBER OF LAMPS IN FIXTURE
BALLAST TYPE USED IN FIXTURE
NUMBER OF BALLASTS IN FIXTURE
TOTAL WATTAGE PER FIXTURE
TOTAL INTERIOR WATTAGE SPECIFIED VS. ALLOWED (WHOLE BUILDING OR SPACE BY SPACE)
TOTAL EXTERIOR WATTAGE SPECIFIED VS. ALLOWED

ADDITIONAL PRESCRIPTIVE COMPLIANCE
☐ 506.2.1 MORE EFFICIENT MECHANICAL EQUIPMENT
☐ 506.2.2 REDUCED LIGHTING POWER DENSITY
☐ 506.2.3 ENERGY RECOVERY VENTILATION SYSTEMS
☐ 506.2.4 HIGHER EFFICIENCY SERVICE WATER HEATING
☐ 506.2.5 ON-SITE SUPPLY OF RENEWABLE ENERGY
☐ 506.2.6 AUTOMATIC DAYLIGHTING CONTROL SYSTEMS

FACILITIES DESIGN
ARCHITECTS & ENGINEERS
FACILITIES MANAGEMENT DIVISION, NCDOT
1 SOUTH WILMINGTON STREET
RALEIGH, NORTH CAROLINA 27601
PHONE:919/707-4540 FAX:919/715-0359

STATE OF NORTH CAROLINA DEPARTMENT OF TRANSPORTATION

52961
REGISTERED ARCHITECT
MARGARET KELLUM CHALK
NORTH CAROLINA

BURNETTE • CHALK ARCHITECTURE & PLANNING, P.A.
105 BANKS STREET MOREHEAD CITY, NC 28557
252.726.5387 252.726.3099 fax 252.726.1250 info@burnchalk.com

KENNETH W. BURNETTE
REGISTERED ARCHITECT
3092
NORTH CAROLINA
MOREHEAD CITY, N.C.

MARGARET KELLUM CHALK
REGISTERED ARCHITECT
11614
NORTH CAROLINA
MOREHEAD CITY, N.C.

CONSULTANTS:

REVISIONS:

NCDOT DIVISION III MULTI-UNIT BUILDING
CASTLE HAYNE SITE - 5501 BARBADOS BLVD.
CASTLE HAYNE, NORTH CAROLINA 28429
SCO# 15-12499-02A
BUILDING CODE SUMMARY: APPENDIX B

PROJECT #16005
DRAWN: CHH
CHECKED: MKC
APPROVED: MKC
DATE: 05 FEB 2018
PHASE: CD

T2.0

these drawings and specifications represent an instrument of service and as such shall remain in ownership with the architect. use or reproduction by any means, in whole or in part, without the architect's consent, is prohibited.

\\Bigserver\data\autocad\proj\16005 NCDOT Division III Castle Hayne Office Building\Drawings\Construction Documents\2002 - Castle Hayne - T2.0 - Appendix B.dwg, T2.0, 2/7/2018 8:09:41 AM, 1:1

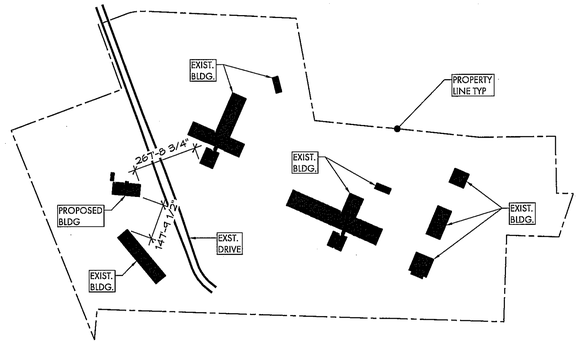

2 T2.1 PROPERTY PLAN
SCALE: 1" = 300'-0"

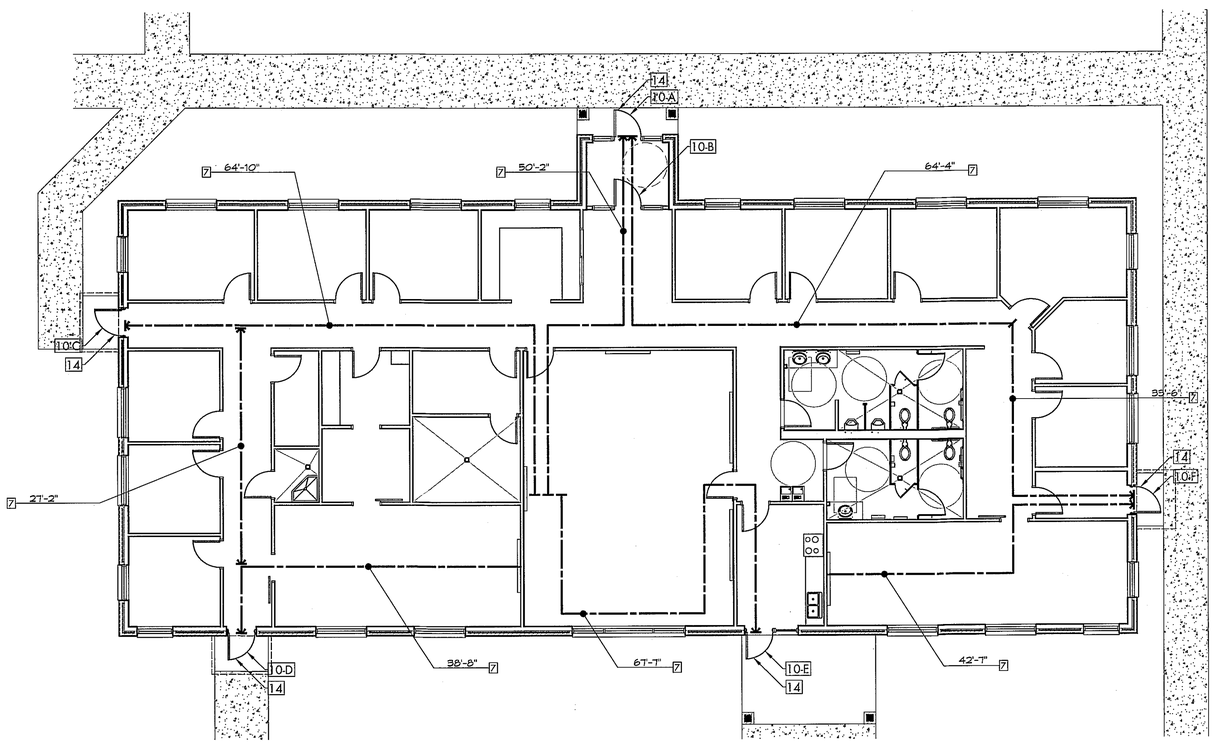

1 T2.1 LIFE SAFETY PLAN
SCALE: 1/8" = 1'-0"

LIFE SAFETY PLAN REQUIREMENTS

1. FIRE AND/OR SMOKE RATED WALL LOCATIONS (CHAPTER 7)
NOT APPLICABLE.
2. ASSUMED AND REAL PROPERTY LINE LOCATIONS
REFER TO SITE PLAN.
3. EXTERIOR WALL OPENING AREA WITH RESPECT TO DISTANCE TO ASSUMED PROPERTY LINES (705.8)
REFER TO TABLE 1.

TABLE 1

WALL	FIRE SEPARATION DISTANCE	OPENING PROTECTION	ALLOWABLE AREA
NORTH	> 30'	UNPROTECTED, NONSPRINKLERED	NO LIMIT
EAST	> 30'	UNPROTECTED, NONSPRINKLERED	NO LIMIT
SOUTH	> 30'	UNPROTECTED, NONSPRINKLERED	NO LIMIT
WEST	> 30'	UNPROTECTED, NONSPRINKLERED	NO LIMIT

4. EXISTING STRUCTURES WITHIN 30' OF PROPOSED BUILDING
REFER TO SITE PLAN.
5. OCCUPANCY TYPES FOR EACH AREA AS IT RELATES TO OCCUPANT LOAD CALCULATION (TABLE 1004.1.1)
REFER TO TABLE 2.
6. OCCUPANT LOADS FOR EACH AREA
REFER TO TABLE 2.

TABLE 2

SPACE	FUNCTION	AREA (S.F.)	S.F./OCC.	OCC. LOAD
102 LOBBY	BUSINESS AREA	104	100 GROSS	1
103 CLERICAL	BUSINESS AREA	111	100 GROSS	1
104 ASST. ENG.	BUSINESS AREA	122	100 GROSS	1
105 ASST. ENG.	BUSINESS AREA	122	100 GROSS	1
106 DIV. RES. ENG.	BUSINESS AREA	142	100 GROSS	1
107 ASST. ENG.	BUSINESS AREA	104	100 GROSS	1
108 ASST. ENG.	BUSINESS AREA	102	100 GROSS	1
109 ASST. ENG.	BUSINESS AREA	103	100 GROSS	1
110 CONST. WORK RM.	BUSINESS AREA	373	100 GROSS	4
116 CONFERENCE	ASSEMBLY (UNCON.)	730	15 NET	49
117 BREAK RM.	BUSINESS AREA	132	100 GROSS	1
120 R/W WORK RM.	BUSINESS AREA	388	100 GROSS	4
122 R/W AGENT	BUSINESS AREA	93	100 GROSS	1
123 R/W AGENT	BUSINESS AREA	90	100 GROSS	1
124 R/W AGENT	BUSINESS AREA	154	100 GROSS	2
125 R/W AGENT	BUSINESS AREA	119	100 GROSS	1
126 R/W AGENT	BUSINESS AREA	115	100 GROSS	1
127 R/W AGENT	BUSINESS AREA	120	100 GROSS	1

7. EXIT ACCESS TRAVEL DISTANCES (1016)
REFER TO PLAN.
8. COMMON PATH OF TRAVEL DISTANCES (1014.3 & 1028.8)
NOT APPLICABLE.
9. DEAD END LENGTHS (1018.4)
NOT APPLICABLE.
10. CLEAR EXIT WIDTHS FOR EACH EXIT DOOR
REFER TO TABLE 3.
11. MAXIMUM CALCULATED OCCUPANT LOAD CAPACITY EACH EXIT DOOR CAN ACCOMMODATE BASED ON EGRESS WIDTH (1005.1)
REFER TO TABLE 3.
12. ACTUAL OCCUPANT LOAD FOR EACH EXIT DOOR
REFER TO TABLE 3.

TABLE 3

DOOR	CLEAR WIDTH (IN.)	MAX. OCC. LOAD	ACTUAL OCC. LOAD
10-A	32	160	30
10-B	32	160	30
10-C	32	160	4
10-D	32	160	6
10-E	32	160	25
10-F	32	160	8

13. A SEPARATE SCHEMATIC PLAN INDICATING WHERE FIRE RATED FLOOR/CEILING AND/OR ROOF STRUCTURE IS PROVIDED FOR PURPOSES OF OCCUPANCY SEPARATION.
NOT APPLICABLE.
14. LOCATION OF DOORS WITH PANIC HARDWARE (1008.1.10)
REFER TO PLAN.
15. LOCATION OF DOORS WITH DELAYED EGRESS LOCKS AND THE AMOUNT OF DELAY (1008.1.9.7)
NOT APPLICABLE.
16. LOCATION OF DOORS WITH ELECTROMAGNETIC EGRESS LOCKS (1008.1.9.8)
NOT APPLICABLE.
17. LOCATION OF DOORS EQUIPPED WITH HOLD-OPEN DEVICES
NOT APPLICABLE.
18. LOCATION OF EMERGENCY ESCAPE WINDOWS (1029)
NOT APPLICABLE.
19. THE SQUARE FOOTAGE OF EACH FIRE AREA (902)
NOT APPLICABLE.
20. THE SQUARE FOOTAGE OF EACH SMOKE COMPARTMENT (407.4)
NOT APPLICABLE.
21. NOTE ANY CODE EXCEPTIONS OR TABLE NOTES THAT MAY HAVE BEEN UTILIZED REGARDING THE ITEMS ABOVE
NOT APPLICABLE.

FACILITIES DESIGN
ARCHITECTS & ENGINEERS
FACILITIES MANAGEMENT DIVISION, NCDOT
1 SOUTH WILMINGTON STREET
RALEIGH, NORTH CAROLINA 27601
PHONE:919/707-4540 FAX:919/715-0399
STATE OF NORTH CAROLINA * DEPARTMENT OF TRANSPORTATION

BURNETTE • CHALK ARCHITECTURE & PLANNING, P.A.
105 BANKS STREET MOREHEAD CITY, NC 28557
252.726.5387 252.726.3099 fax 252.726.1230 info@bcarchpa.com

CHALK ARCHITECTURAL ARCHITECTURE P.A. 52961 REGISTERED ARCHITECTURAL CORPORATION MOREHEAD CITY, NORTH CAROLINA

KENNETH W. BURNETTE REGISTERED ARCHITECT 3092 NORTH CAROLINA MOREHEAD CITY, N.C.

MARGARET KELLUM CHALK REGISTERED ARCHITECT 11614 NORTH CAROLINA MOREHEAD CITY, N.C.

CONSULTANTS:

REVISIONS:

NCDOT DIVISION III MULTI-UNIT BUILDING
CASTLE HAYNE SITE - 5501 BARBADOS BLVD.
CASTLE HAYNE, NORTH CAROLINA 28429
SCO# 15-12499-02A
LIFE SAFETY PLAN

PROJECT #16005
DRAWN: CHH
CHECKED: MKC
APPROVED: MKC
DATE: 05 FEB 2018
PHASE: CD

T2.1

these drawings and specifications represent an instrument of service and as such shall remain in ownership with the architect. use or reproduction by any means, in whole or in part, without the architect's consent, is prohibited.

\\bjpserver\data\acad\proj\16005 NCDOT Division III Castle Hayne Office Building\Drawings\Construction Documents\005 - Castle Hayne - T2.1 - Life Safety Plan.dwg, T2.1, 2/5/2018 1:28:17 PM, 1:1

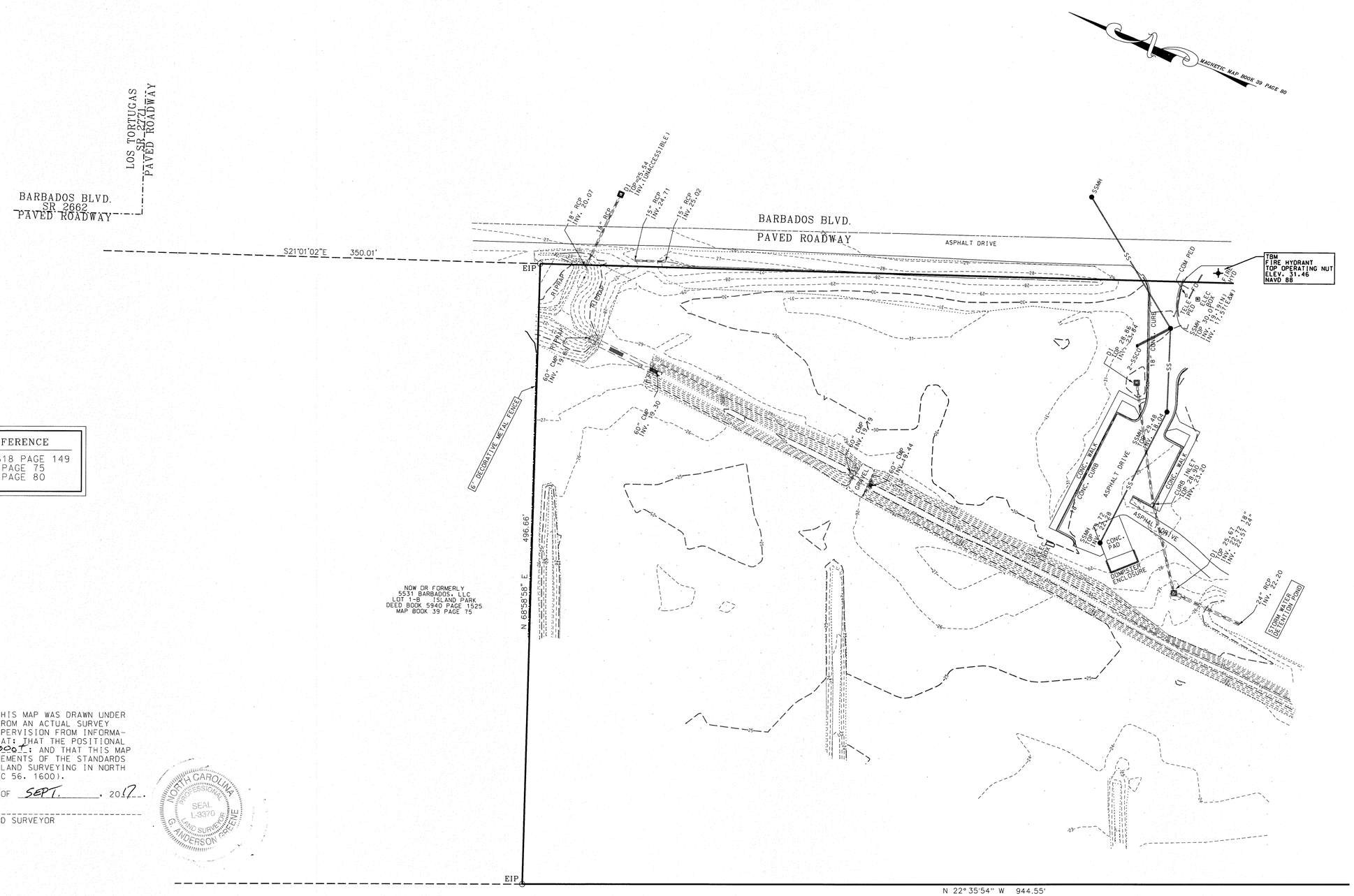

SURVEY REFERENCE

DEED BOOK 2618 PAGE 149
MAP BOOK 39 PAGE 75
MAP BOOK 39 PAGE 80

I CERTIFY THAT THIS MAP WAS DRAWN UNDER MY SUPERVISION FROM AN ACTUAL SURVEY MADE UNDER MY SUPERVISION FROM INFORMATION SHOWN ON PLAT; THAT THE POSITIONAL ACCURACY IS 1:20201; AND THAT THIS MAP MEETS THE REQUIREMENTS OF THE STANDARDS OF PRACTICE FOR LAND SURVEYING IN NORTH CAROLINA (21 NCAC 56. 1600).

THIS 18 DAY OF SEPT., 2017.

SEAL _____
PROFESSIONAL LAND SURVEYOR

NORTH CAROLINA PROFESSIONAL SEAL L-3370 LAND SURVEYOR G. ANDERSON GREENE

40 20 0 40 80

GRAPHIC SCALE: 1"= 40'

LEGEND

—30—	EX. ELEVATION CONTOUR
—SS—	EX. GRAVITY SEWER
—FO—	EX. BURIED FIBER OPTIC

PROJECT NO: P1540-004
DRAWING NO: 002

STROUD ENGINEERING, P.A.
107B COMMERCE STREET
GREENVILLE, NC 27858
(252) 756-9352
LICENSE NO. C-0647
DESIGNED BY: G ANDERSON GREENE, PLS

CONSTRUCTION DOCUMENTS

NORTH CAROLINA PROFESSIONAL SEAL L-3370 LAND SURVEYOR G. ANDERSON GREENE
9/10/17
SEAL: SEAL NOT VALID UNLESS SIGNED AND DATED

FACILITIES DESIGN
ARCHITECTS & ENGINEERS
FACILITIES MANAGEMENT DIVISION, NCDOT
1 SOUTH WILMINGTON STREET
RALEIGH, NORTH CAROLINA 27601
PHONE919/707-4540 FAX919/715-0399

STATE OF NORTH CAROLINA DEPARTMENT OF TRANSPORTATION

CONSULTANT:

DRAWING TITLE / DISCRIPTION: EXISITNG CONDITIONS SURVEY

PROJECT TITLE:
CASTLE HAYNE MULTI-UNIT OFFICE BUILDING
PENDER COUNTY, DIVISION 3, NCDOT
5310 BARBADOS BLVD., SUITE 102
CASTLE HAYNE, NC 28429
NEW HANOVER COUNTY, NORTH CAROLINA

STATE CONSTRUCTION ID.# 15-12499-02A

ASSET NUMBER:

CO.#	SITE.#	BLDG.#
71 -	-	-

REVISIONS

NO.	DATE

DATE ISSUED: 9/06/17
DRAWN BY: GAG
CHECKED BY: JHF
SHEET NO.
1 OF 1

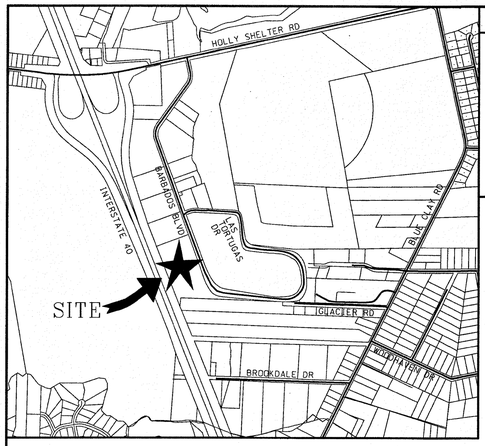

PROPOSED SITE DATA

PROPOSED IMPERVIOUS AREAS	
ROOF	5,957 SF
TRANSPORTATION	
PROPOSED IMPERVIOUS	38,966 SF
TOTAL	44,923 SF
REQUIRED PARKING SPACES	15
PROPOSED PARKING SPACES	
REGULAR	59
HANDICAP	4
TOTAL	63

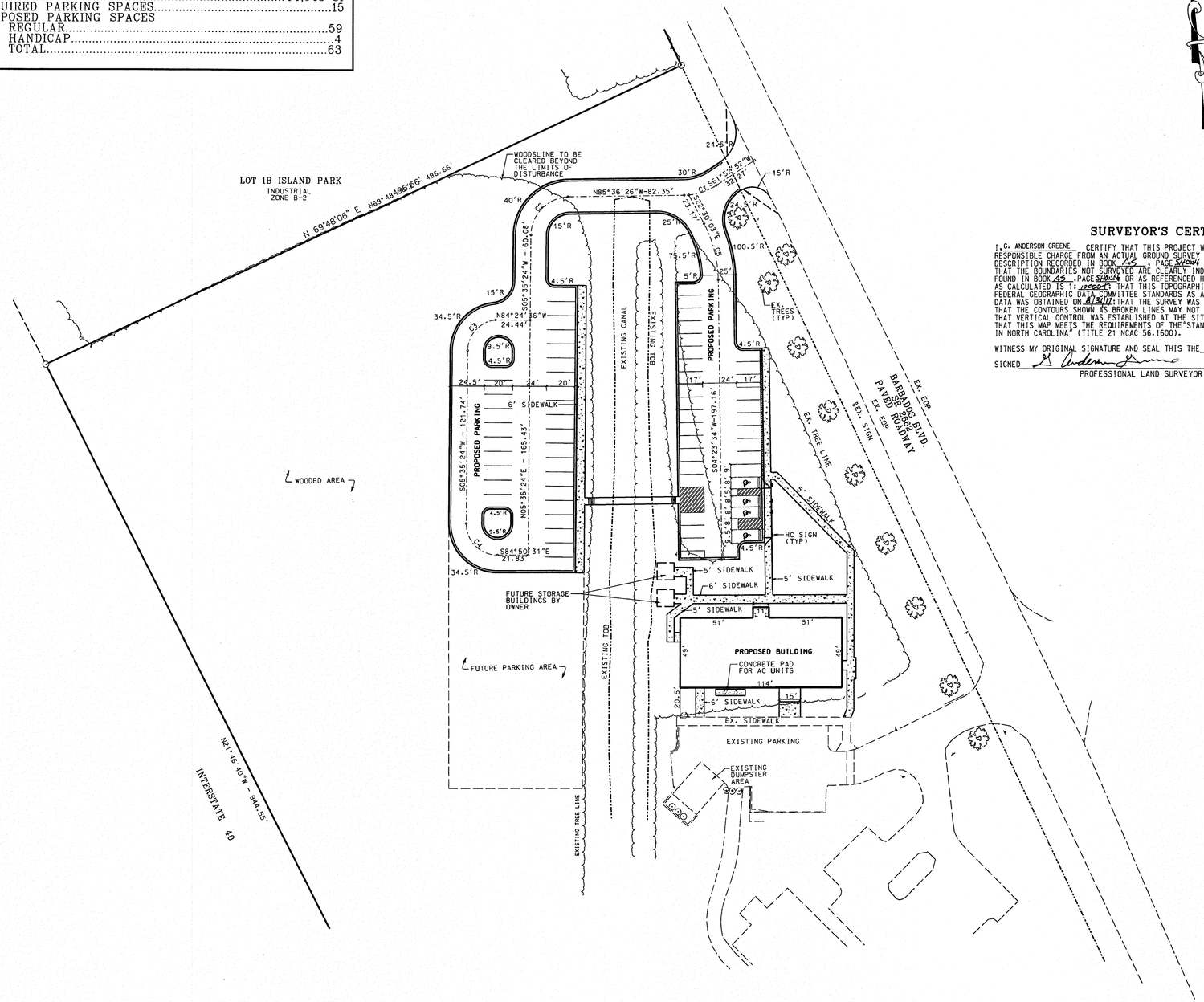

CURVE DATA

C1
R=42.5'
L=24.12'
CH=S78°08'13"W
23.79'

C2
R=27.5'
L=42.62'
CH=S49°59'26"W
38.48'

C3
R=22.0'
L=32.11'
CH=S47°24'01"W
29.33'

C4
R=22.0'
L=34.72'
CH=S39°37'34"E
31.23'

C5
R=88.0'
L=41.31'
CH=S09°03'14"E
40.93'

NOTES:

1. PARKING LOT WILL STRIPPED IN ACCORDANCE WITH THIS PLAN.
2. ALL REQUIRED WATER & SEWER IMPROVEMENTS SHALL CONFORM TO THE CAPE FEAR PUBLIC UTILITY AUTHORITY STANDARDS.
3. FINAL VEGETATION PLAN SHALL BE SUBMITTED AND APPROVED AND INSPECTION FOUND TO BE IN COMPLIANCE WITH APPROVED PLAN PRIOR TO ISSUANCE OF A FINAL OCCUPANCY PERMIT.
4. CONTRACTOR MUST NOTIFY ONE CALL CENTER 48 HOURS PRIOR TO START OF EXCAVATION (1-800-632-4949).
5. EROSION CONTROL PLAN REQUIRED.
6. THE PROPERTY IS NOT WITHIN A FLOOD HAZARD AREA.
7. NCDOT DRIVEWAY PERMIT IS REQUIRED.
8. REVISION TO STORMWATER MANAGEMENT PLAN IS REQUIRED.
9. DETENTION POND WILL SERVE AS TEMPORARY SEDIMENT BASIN DURING CONSTRUCTION.

40 20 0 40 80

GRAPHIC SCALE: 1"= 40'

SURVEYOR'S CERTIFICATE

I, G. ANDERSON GREENE CERTIFY THAT THIS PROJECT WAS COMPLETED UNDER MY DIRECT AND RESPONSIBLE CHARGE FROM AN ACTUAL GROUND SURVEY MADE UNDER MY SUPERVISION (DEED DESCRIPTION RECORDED IN BOOK AS , PAGE 51044 OR FROM BOOKS REFERENED HEREON); THAT THE BOUNDARIES NOT SURVEYED ARE CLEARLY INDICATED AS DRAWN FROM INFORMATION FOUND IN BOOK AS , PAGE SHOWN OR AS REFERENCED HEREON; THAT THE RATIO OF PRECISION AS CALCULATED IS 1:10000; THAT THIS TOPOGRAPHIC SURVEY WAS PERFORMED TO MEET FEDERAL GEOGRAPHIC DATA COMMITTEE STANDARDS AS APPLICABLE; THAT THE TOPOGRAPHIC DATA WAS OBTAINED ON 8/31/17; THAT THE SURVEY WAS COMPLETED ON 8/31/17 ; THAT THE CONTOURS SHOWN AS BROKEN LINES MAY NOT MEET THE STATED STANDARD; THAT VERTICAL CONTROL WAS ESTABLISHED AT THE SITE TO THE CLASS "A" STANDARD; AND THAT THIS MAP MEETS THE REQUIREMENTS OF THE "STANDARDS OF PRACTICE FOR AND SURVEYING IN NORTH CAROLINA" (TITLE 21 NCAC 56.1600).

WITNESS MY ORIGINAL SIGNATURE AND SEAL THIS THE 9 DAY OF JAN, 2018.

SIGNED G. Anderson Greene

PROFESSIONAL LAND SURVEYOR L-3370

NORTH CAROLINA PROFESSIONAL SEAL L-3370 LICENSED LAND SURVEYOR G. ANDERSON GREENE

STROUD ENGINEERING, P.A.
3028 COMMERCE STREET
GREENVILLE, NC 27858
(252) 756-9352
LICENSE NO. C-0647
RICHARD A. BROWN, P.E.

CONSTRUCTION DOCUMENTS

NORTH CAROLINA PROFESSIONAL SEAL 18845 ENGINEER RICHARD A. BROWN

SEAL NOT VALID UNLESS SIGNED AND DATED

DESIGNED BY:

FACILITIES DESIGN ARCHITECTS & ENGINEERS
FACILITIES MANAGEMENT DIVISION, NCDOT
1 SOUTH WILMINGTON STREET
RALEIGH, NORTH CAROLINA 27601
PHONE:919/707-4540 FAX:919/715-0399

STATE OF NORTH CAROLINA DEPARTMENT OF TRANSPORTATION

CONSULTANT:

DRAWING TITLE / DESCRIPTION:

SITE PLAN

PROJECT TITLE:

CASTLE HAYNE MULTI-UNIT OFFICE BUILDING
NEW HANOVER COUNTY, DIVISION 3, NCDOT

5310 BARBADOS BLVD., SUITE 102
CASTLE HAYNE, NC 28429
NEW HANOVER COUNTY, NORTH CAROLINA

STATE CONSTRUCTION ID.# 15-12499-02A

ASSET NUMBER:

CO.#	SITE.#	BLDG.#
71	-	-

REVISIONS

NO.	DATE

DATE ISSUED: 1/09/18
DRAWN BY: LHJ
CHECKED BY: RAB

SHEET NO.

C1 OF 6

PROJECT NO: P1540-004
DRAWING NO: 001

SEEDING SCHEDULE

NATIVE GRASS SEEDING AND MULCHING SHALL BE PERFORMED ON THE DISTURBED AREAS OF WETLANDS AND RIPARIAN AREAS, AND ADJACENT TO STREAM RELOCATION CONSTRUCTION WITHIN A 50 FOOT ZONE ON BOTH SIDES OF THE STREAM DEPRESSION. MEASURED FROM TOP OF STREAM BANK OR CENTER OF DEPRESSION. THE STREAM BANK OF THE STREAM LOCATION SHALL BE SEEDED BY A METHOD THAT DOES NOT ALTER THE TYPICAL CROSS SECTION OF THE STREAM BANK. NATIVE GRASS SEEDING AND MULCHING SHALL ALSO BE PERFORMED IN THE PERMANENT SOIL REINFORCEMENT MAT SECTION OF PREFORMED SCOUR HOLES, AND IN OTHER AREAS AS DIRECTED.

THE KINDS OF SEED AND FERTILIZER, AND THE RATES OF APPLICATION OF SEED, FERTILIZER, AND LIMESTONE, SHALL BE AS STATED BELOW. DURING PERIODS OF OVERLAPPING DATES, THE KIND OF SEED TO BE USED SHALL BE DETERMINED. ALL RATES ARE IN POUNDS PER ACRE.

MARCH 1 - AUGUST 31		SEPTEMBER 1 - FEBRUARY 28	
18#	CREEPING RED FESCUE	18#	CREEPING RED FESCUE
6#	INDIANGRASS	6#	INDIANGRASS
8#	LITTLE BLUESTEM	8#	LITTLE BLUESTEM
4#	SWITCHGRASS	4#	SWITCHGRASS
25#	BROWNTOP MILLET	35#	RYE GRAIN
500#	FERTILIZER	500#	FERTILIZER
4000#	LIMESTONE	4000#	LIMESTONE

APPROVED CREEPING RED FESCUE CULTIVARS:

ABERDEEN BOREAL EPIC CINDY LOU

FERTILIZER SHALL BE 10-20-20 ANALYSIS. A DIFFERENT ANALYSIS OR FERTILIZER MAY BE USED PROVIDED THE 1-2-2 RATIO IS MAINTAINED AND THE RATE OF APPLICATION ADJUSTED TO PROVIDE THE SAME AMOUNT OF PLANT FOOD AS A 10-20-20 ANALYSIS AND AS DIRECTED.

LEGEND

- LIMITS OF DISTURBANCE
- —X——X— SILT FENCE
- EX. DITCH/ WASHOUT TO BE FILLED WITH SELECT FILL
- —28— PROPOSED CONTOURS
- — —30— — · EXISTING CONTOURS
- FF FINISH FLOOR
- TSW TOP OF SIDEWALK
- BC BACK OF CURB
- TOG TOP OF GRATE
- INV INVERT
- DRAINAGE AREA LINE

TIME SEQUENCE OF OPERATION

1. INSTALL CONSTRUCTION ENTRANCE
2. CLEAR SITE WITHIN LIMITS OF DISTURBANCE
3. INSTALL EROSION CONTROL DEVICES PRIOR TO GRADING ACTIVITIES
4. ROUGH GRADE SITE AND EXCAVATE POND "B"
5. INSTALL STORM DRAIN PIPE, DROP INLETS, AND PLACE EROSION CONTROL MEASURES
6. INSTALL UTILITIES
7. PLACE STONE, CURB AND GUTTER, CONCRETE WALKS AND PAVING
8. FINE GRADE SITE
9. ESTABLISH VEGETATION

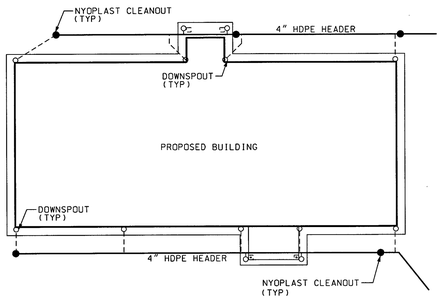

DOWNSPOUT BLOW-UP (2 / C2)

SCALE: NOT TO SCALE

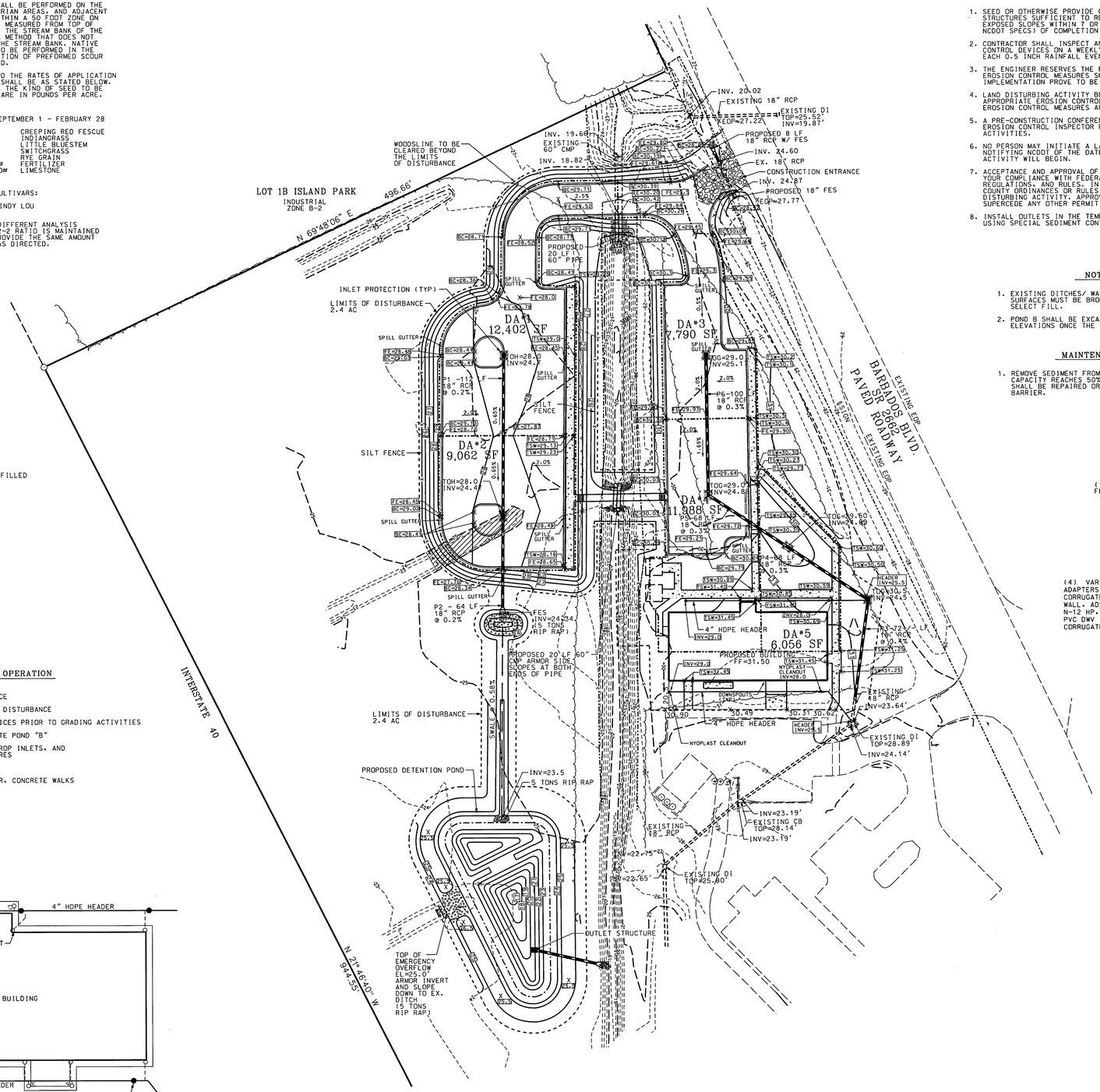

EROSION CONTROL NOTES:

1. SEED OR OTHERWISE PROVIDE GROUND COVER DEVICES OR STRUCTURES SUFFICIENT TO RESTRAIN EROSION FOR ALL EXPOSED SLOPES WITHIN 7 OR 14 WORKING DAYS (PER NCDOT SPECS) OF COMPLETION OF ANY PHASE OF GRADING.
2. CONTRACTOR SHALL INSPECT AND MAINTAIN ALL EROSION CONTROL DEVICES ON A WEEKLY BASIS AND AFTER EACH 0.5 INCH RAINFALL EVENT.
3. THE ENGINEER RESERVES THE RIGHT TO REQUIRE ADDITIONAL EROSION CONTROL MEASURES SHOULD THE PLAN OR ITS IMPLEMENTATION PROVE TO BE INADEQUATE.
4. LAND DISTURBING ACTIVITY BEYOND THAT REQUIRED TO INSTALL APPROPRIATE EROSION CONTROL MEASURES MAY NOT PROCEED UNTIL EROSION CONTROL MEASURES ARE INSPECTED.
5. A PRE-CONSTRUCTION CONFERENCE MUST BE SCHEDULED WITH THE EROSION CONTROL INSPECTOR PRIOR TO INITIATING LAND DISTURBING ACTIVITIES.
6. NO PERSON MAY INITIATE A LAND-DISTURBING ACTIVITY BEFORE NOTIFYING NCDOT OF THE DATE THAT THE LAND DISTURBING ACTIVITY WILL BEGIN.
7. ACCEPTANCE AND APPROVAL OF THIS PLAN IS CONDITIONED UPON YOUR COMPLIANCE WITH FEDERAL AND STATE WATER QUALITY LAWS, REGULATIONS, AND RULES. IN ADDITION, LOCAL, CITY, AND COUNTY ORDINANCES OR RULES MAY ALSO APPLY TO THIS LAND DISTURBING ACTIVITY. APPROVAL BY THE CITY DOES NOT SUPERCEDE ANY OTHER PERMIT OR APPROVAL.
8. INSTALL OUTLETS IN THE TEMPORARY SILT FENCE AT LOW POINTS USING SPECIAL SEDIMENT CONTROL FENCE AND FILTER STONE OR WATTLES.

NOTE

1. EXISTING DITCHES/ WASHOUTS UNDER LOAD BEARING SURFACES MUST BE BROUGHT UP TO GRADE WITH SELECT FILL.
2. POND B SHALL BE EXCAVATED TO ITS INTENDED FINAL ELEVATIONS ONCE THE SITE IS ESTABLISHED.

MAINTENANCE PLAN

1. REMOVE SEDIMENT FROM THE TEMPORARY SILT FENCE WHEN IT'S CAPACITY REACHES 50% OR MORE. THE TEMPORARY SILT FENCE SHALL BE REPAIRED OR REPLACED AS NECESSARY TO MAINTAIN A BARRIER.

STORMWATER DATA

RECEIVING WATER BODY.....PRINCE GEORGE CREEK

PROPOSED IMPERVIOUS POND A	24,047 SF
EXISTING IMPERVIOUS POND A	73,186 SF
FUTURE IMPERVIOUS POND A	3,391 SF
TOTAL IMPERVIOUS POND A	100,624 SF
PROPOSED IMPERVIOUS POND B	20,829 SF
FUTURE IMPERVIOUS POND B	17,068 SF
TOTAL IMPERVIOUS POND B	37,897 SF

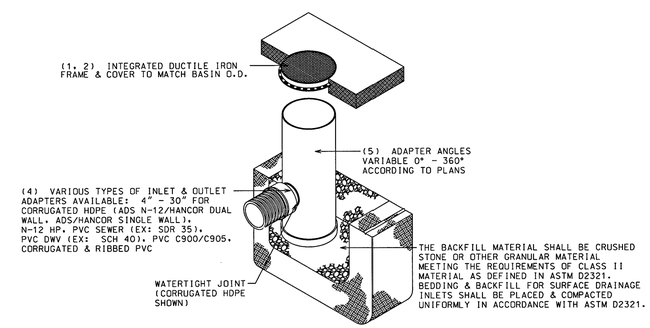

NOTES:

1. 8" - 30" SOLID COVERS SHALL BE DUCTILE IRON PER ASTM A536 GRADE 70-50-05.
2. 12" - 30" FRAMES SHALL BE DUCTILE IRON PER ASTM A536 GRADE 70-50-05. 8" & 10" SOLID COVERS FIT DIRECTLY ONTO DRAIN BASINS WITH THE USE OF A PVC BODY TOP.
3. DRAIN BASIN TO BE CUSTOM MANUFACTURED ACCORDING TO PLAN DETAILS. RISERS ARE NEEDED FOR BASINS OVER 84" DUE TO SHIPPING RESTRICTIONS.
4. DRAINAGE CONNECTION STUB JOINT TIGHTNESS SHALL CONFORM TO ASTM D3212 FOR CORRUGATED HDPE (ADS N-12/HANCOR DUAL WALL), N-12 HP, & PVC SEWER (4" - 24").
5. ADAPTERS CAN BE MOUNTED ON ANY ANGLE 0° TO 360°. TO DETERMINE MINIMUM ANGLE BETWEEN ADAPTERS SEE DRAWING NO. 7001-110-012.
6. 12" - 30" SOLID COVERS SHALL MEET H-20 LOAD RATING.
7. 8" & 10" SOLID COVERS ARE RATED FOR LIGHT DUTY APPLICATIONS ONLY; NO CONCRETE COLLAR NEEDED FOR LIGHT DUTY RATING.

NYLOPLAST DRAIN CLEANOUT WITH SOLID COVER (1 / C2)

SCALE: NOT TO SCALE

PROJECT NO: P1540-004
DRAWING NO: 002

STROUD ENGINEERING, P.A.
107B COMMERCE STREET
GREENVILLE, NC 27858
(252) 756-9352
LICENSE NO. C-0647
RICHARD A. BROWN, P.E.
DESIGNED BY:

FACILITIES DESIGN ARCHITECTS & ENGINEERS
FACILITIES MANAGEMENT DIVISION, NCDOT
1 SOUTH WILMINGTON STREET
RALEIGH, NORTH CAROLINA 27601
PHONE:919/707-4540 FAX:919/715-0399

CONSTRUCTION DOCUMENTS

NORTH CAROLINA PROFESSIONAL SEAL 18845 ENGINEER RICHARD A. BROWN
SEAL NOT VALID UNLESS SIGNED AND DATED

CONSULTANT:

DRAWING TITLE / DISCRIPTION: GRADING PLAN

PROJECT TITLE: CASTLE HAYNE MULTI-UNIT OFFICE BUILDING
PENDER COUNTY, DIVISION 3, NCDOT
5310 BARBADOS BLVD., SUITE 102
CASTLE HAYNE, NC 28429
NEW HANOVER COUNTY, NORTH CAROLINA

STATE CONSTRUCTION ID.# 15-12499-02A

ASSET NUMBER: CO.# SITE.# BLDG.# 71 - . - .

REVISIONS

NO.	DATE

DATE ISSUED: 1/09/18
DRAWN BY: LHJ
CHECKED BY: RAB
SHEET NO.
C2 OF 6

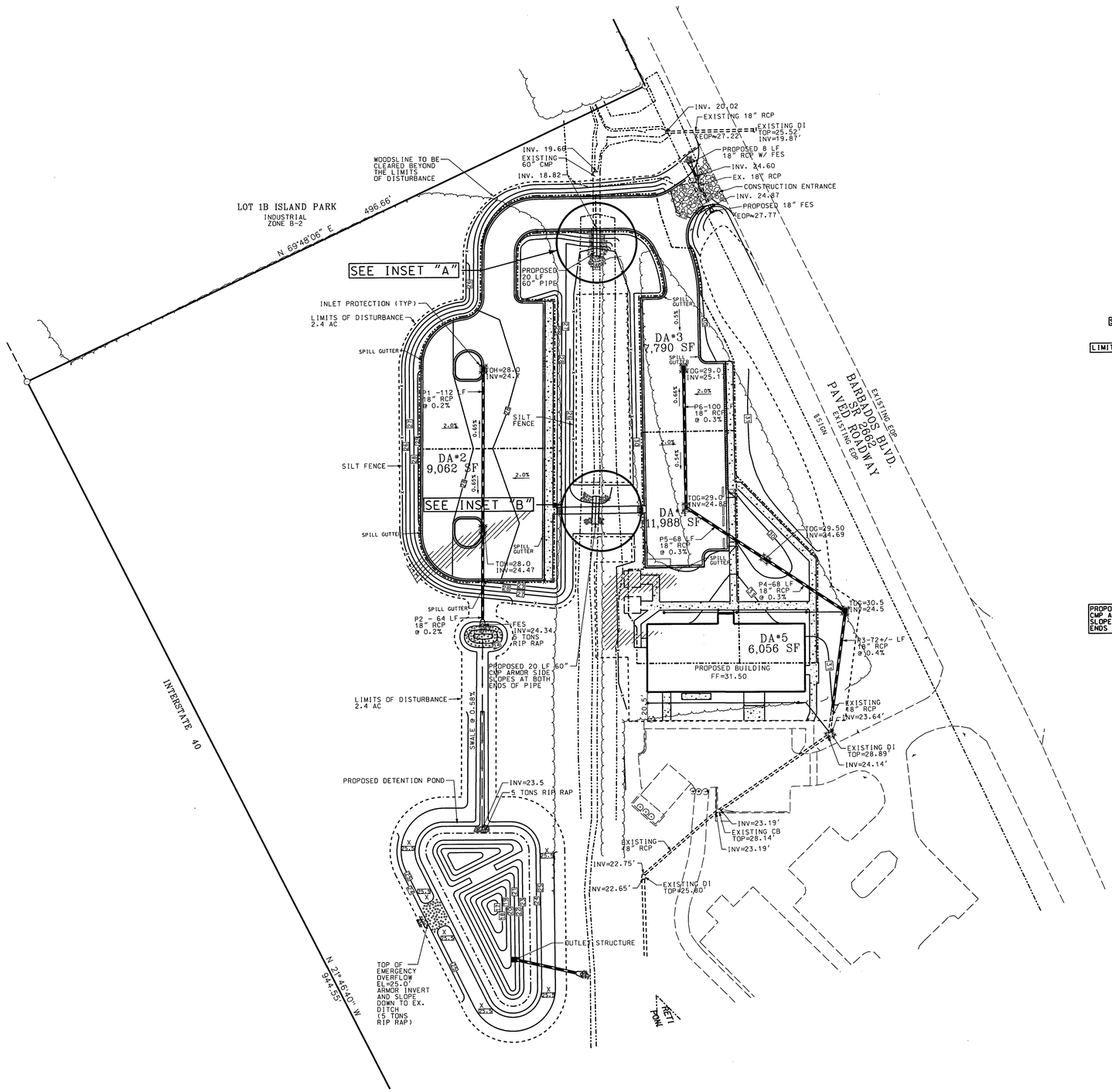

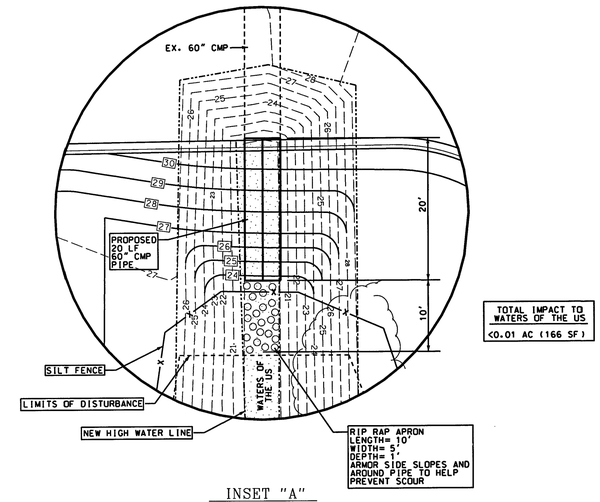

INSET "A"

SCALE: 1"=10'

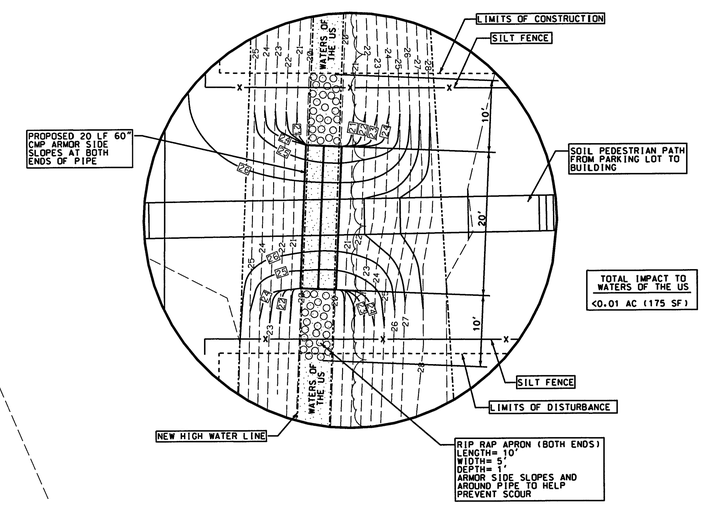

INSET "B"

SCALE: 1"=10'

GRAPHIC SCALE: 1"= 40'

PROJECT NO: P1540-004
DRAWING NO: 003

STROUD ENGINEERING, P.A.
107B COMMERCE STREET
GREENVILLE, NC 27858
(252) 756-9352
LICENSE NO. C-0647

RICHARD A. BROWN, P.E.

CONSTRUCTION DOCUMENTS

NORTH CAROLINA PROFESSIONAL SEAL 36845 ENGINEER RICHARD A. BROWN
SEAL NOT VALID UNLESS SIGNED AND DATED

DESIGNED BY:
FACILITIES DESIGN ARCHITECTS & ENGINEERS
FACILITIES MANAGEMENT DIVISION, NCDOT
1 SOUTH WILMINGTON STREET
RALEIGH, NORTH CAROLINA 27601
PHONE:919/707-4540 FAX:919/715-0399

STATE OF NORTH CAROLINA DEPARTMENT OF TRANSPORTATION

CONSULTANT:

DRAWING TITLE / DESCRIPTION:
WATERS OF THE US IMPACT MAP

PROJECT TITLE:
CASTLE HAYNE MULTI-UNIT OFFICE BUILDING
PENDER COUNTY, DIVISION 3, NCDOT
5310 BARBADOS BLVD., SUITE 102
CASTLE HAYNE, NC 28429
NEW HANOVER COUNTY, NORTH CAROLINA

STATE CONSTRUCTION ID.# 15-12499-02A

ASSET NUMBER:
CO.# SITE.# BLDG.#
71 . . .

REVISIONS
NO. DATE

DATE ISSUED: 1/09/18
DRAWN BY: LHJ
CHECKED BY: RAB
SHEET NO.
C3 OF 6

WHEN BACKFILLING TRENCH, COMPACT IN LAYERS TO PREVENT FUTURE SETTLEMENT. DO NOT LEAVE MOUND.

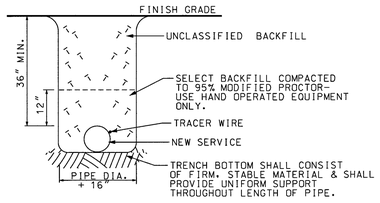

UTILITYSERVICE TRENCH DETAIL
(GAS SERVICE INSTALLED BY GAS COMPANY) 1/C4

SCALE: NTS

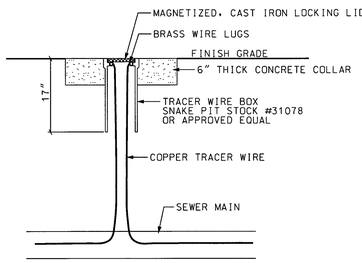

TRACER WIRE ACCESS BOX DETAIL 2/C4

SCALE: NTS

NOTES

1. WATER SERVICE SHALL BE DESIGNED AND INSTALLED ACCORDING TO CFPUA (CAPE FEAR PUBLIC UTILITY AUTHORITY) STANDARDS.
2. ALL UNDERGROUND PIPING AND UTILITIES (BOTH METALLIC AND NON-METALLIC), SHALL HAVE TRACER WIRE INSTALLED ALONG THE PIPE.

CAPE FEAR PUBLIC UTILITY AUTHORITY STANDARD NOTES

1. SEWER GUARDS REQUIRED AT ALL MANHOLES. STAINLESS STEEL SEWER GUARDS REQUIRED AT MANHOLES LOCATED IN TRAFFIC AREAS.
2. WATER AND SEWER SERVICES SHALL BE PERPENDICULAR TO MAIN AND TERMINATE AT RIGHT-OF-WAY LINE. SEWER SERVICES IN CUL-DE-SACS ARE REQUIRED TO BE PERPENDICULAR, OR MUST ORIGINATE IN END OF LINE MANHOLE AND TERMINATE AT RIGHT-OF-WAY LINE.
3. ALL SERVICES TYING INTO DUCTILE IRON MAINS SHALL BE CONSTRUCTED OF CLASS 50, DIP, WITH PROTECTO 401 CERAMIC EPOXY LINING.
4. MINIMUM 10' UTILITIES EASEMENT PROVIDED ALONG THE FRONTAGE OF ALL LOTS AND AS SHOWN FOR NEW DEVELOPMENTS.
5. NO FLEXIBLE COUPLINGS SHALL BE USED.
6. ALL STAINLESS STEEL FASTENERS SHALL BE 316.
7. CLEANOUTS SHALL BE LOCATED A MINIMUM OF 12 FEET FROM ALL PROPERTY CORNERS. WATER METER BOXES ARE TO BE A MINIMUM OF 5 FEET FROM THE PROPERTY CORNER.

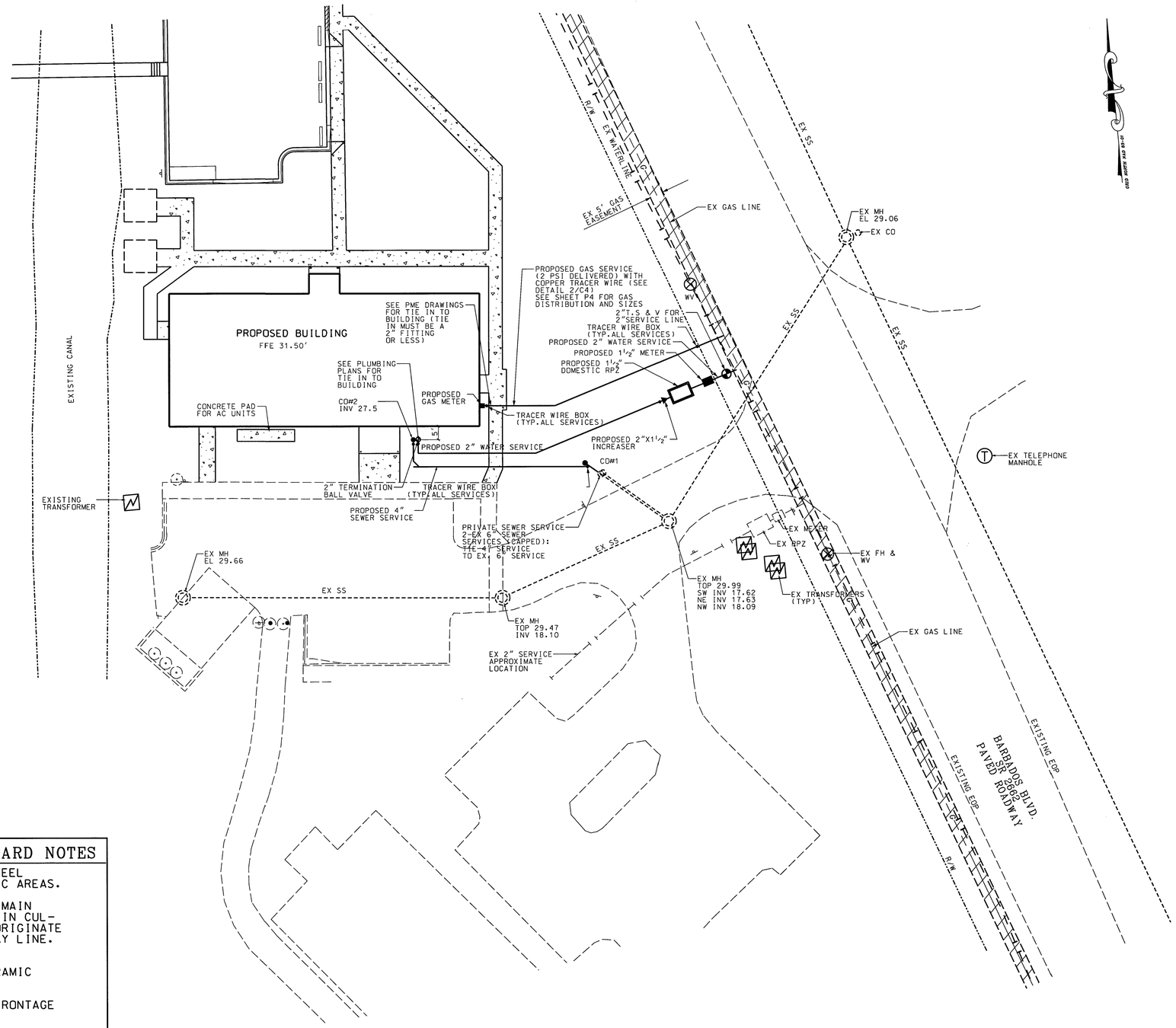

20 10 0 20 40

GRAPHIC SCALE: 1"= 20'

PROJECT NO: P1540~004
DRAWING NO: 004

STROUD ENGINEERING, P.A.
C-0647
3 SOUTH EDGEMOORE STREET
GREENVILLE, NC 27858
(252) 756-9352
LICENSE NO. C-0647
RICHARD A. BROWN, P.E.

CONSTRUCTION DOCUMENTS

NORTH CAROLINA PROFESSIONAL SEAL 36845 ENGINEER RICHARD A. BROWN

SEAL NOT VALID UNLESS SIGNED AND DATED

DESIGNED BY:

FACILITIES DESIGN ARCHITECTS & ENGINEERS
FACILITIES MANAGEMENT DIVISION, NCDOT
1 SOUTH WILMINGTON STREET
RALEIGH, NORTH CAROLINA 27601
PHONE:919/707-4540 FAX:919/715-0399

STATE OF NORTH CAROLINA DEPARTMENT OF TRANSPORTATION

CONSULTANT:

DRAWING TITLE / DISCRIPTION:

UTILITY PLAN

PROJECT TITLE:
CASTLE HAYNE MULTI-UNIT OFFICE BUILDING
NEW HANOVER COUNTY, DIVISION 3, NCDOT

5310 BARBADOS BLVD., SUITE 102
CASTLE HAYNE, NC 28429
NEW HANOVER COUNTY, NORTH CAROLINA

STATE CONSTRUCTION ID.# 15-12499-02A

ASSET NUMBER:

CO.#	SITE.#	BLDG.#
71	.	.

REVISIONS

NO.	DATE

DATE ISSUED: 1/09/18
DRAWN BY: LHJ
CHECKED BY: RAB
SHEET NO.

C4 OF 6

NOTES

1. PRIOR TO ANY CLEARING, GRADING OR CONSTRUCTION ACTIVITY, TREE PROTECTION FENCING WILL BE INSTALLED AROUND PROTECTED TREES. NO CONSTRUCTION WORKERS, TOOLS, MATERIALS, OR VEHICLES ARE PERMITTED WITHIN THE TREE PROTECTION FENCING.

LEGEND

SYMBOL	DESCRIPTION
	WHITE INDIAN HAWTHORN
	CAMELIA JAPONICA (VARIED COLOR, MOSTLY RED)
	CENTIPEDE SOD

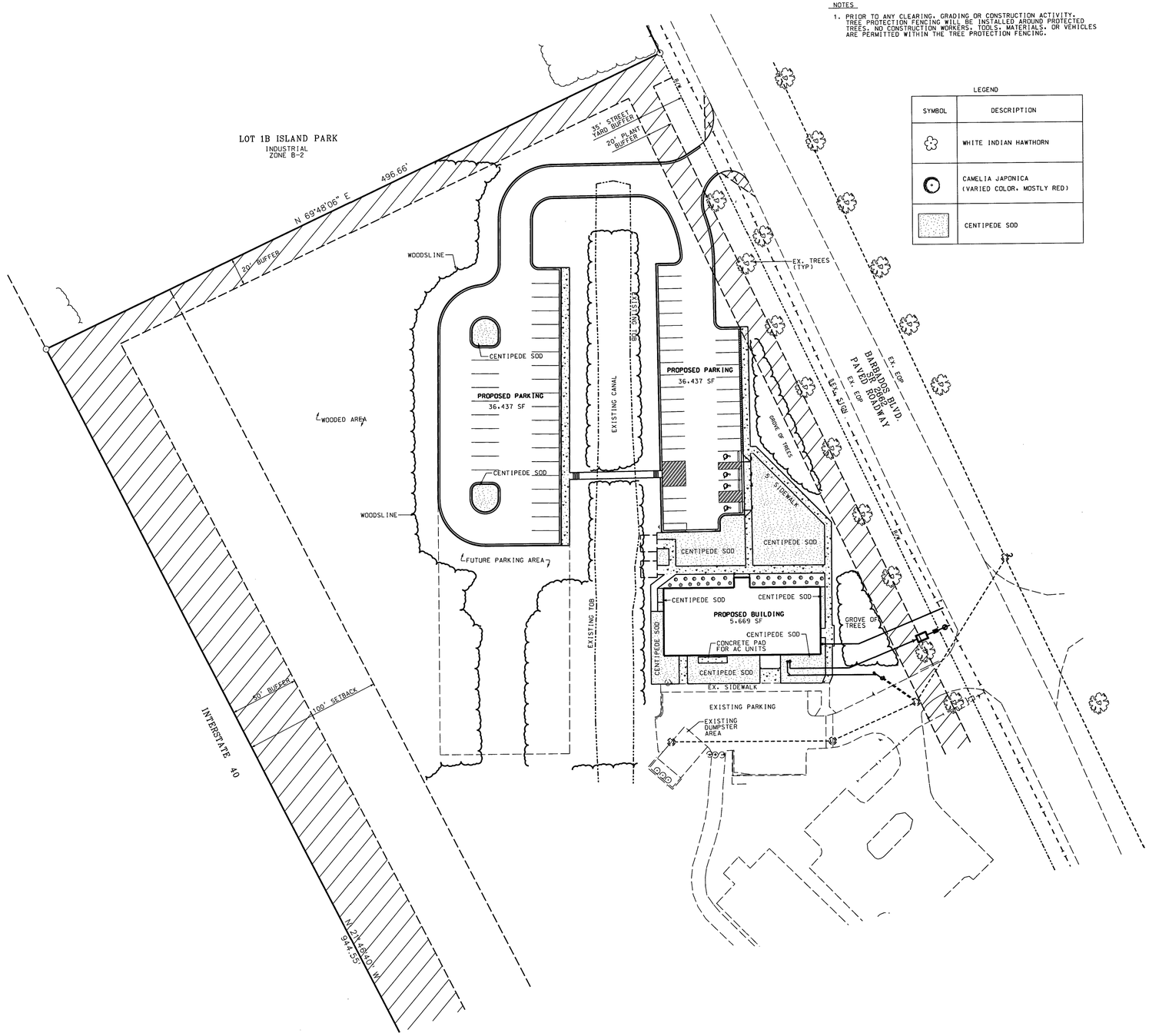

40 20 0 40 80

GRAPHIC SCALE: 1"= 40'

PROJECT NO: P1540-004
DRAWING NO: 005

STROUD ENGINEERING, P.A.
107B COMMERCE STREET
GREENVILLE, NC 27858
(252) 756-9352
LICENSE NO. C-0647
RICHARD A. BROWN, P.E.

CONSTRUCTION DOCUMENTS

NORTH CAROLINA PROFESSIONAL SEAL 8845 ENGINEER RICHARD A. BROWN

SEAL NOT VALID UNLESS SIGNED AND DATED

DESIGNED BY:

FACILITIES DESIGN ARCHITECTS & ENGINEERS
FACILITIES MANAGEMENT DIVISION, NCDOT
1 SOUTH WILMINGTON STREET
RALEIGH, NORTH CAROLINA 27601
PHONE:919/707-4240 FAX:919/715-0399

STATE OF NORTH CAROLINA * NCDOT * DEPARTMENT OF TRANSPORTATION

CONSULTANT:

DRAWING TITLE / DESCRIPTION:

VEGETATION PLAN

PROJECT TITLE:
CASTLE HAYNE MULTI-UNIT OFFICE BUILDING
NEW HANOVER COUNTY, DIVISION 3, NCDOT
5310 BARBADOS BLVD., SUITE 102
CASTLE HAYNE, NC 28429
NEW HANOVER COUNTY, NORTH CAROLINA

STATE CONSTRUCTION
ID.# 15-12499-02A

ASSET NUMBER:
CO.# SITE.# BLDG.#
71 - . - .

REVISIONS

NO.	DATE

DATE ISSUED: 1/09/18
DRAWN BY: LHJ
CHECKED BY: RAB

SHEET NO.

C5 OF 6

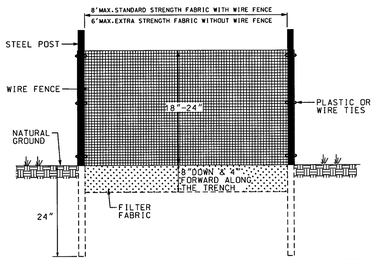

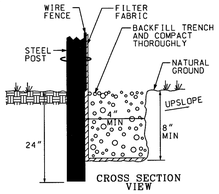

INSTALLATION NOTES:

1. THE BASE OF BOTH END POSTS SHOULD BE AT LEAST ONE FOOT HIGHER THAN THE MIDDLE OF THE FENCE. CHECK WITH A LEVEL IF NECESSARY.
2. INSTALL POSTS 4 FEET APART IN CRITICAL AREAS AND 6 FEET APART ON STANDARD APPLICATIONS.
3. INSTALL POSTS 2 FEET DEEP ON THE DOWNSTREAM SIDE OF THE SILT FENCE, AND AS CLOSE AS POSSIBLE TO THE FABRIC, ENABLING POSTS TO SUPPORT THE FABRIC FROM UPSTREAM WATER PRESSURE.
4. INSTALL POSTS WITH THE NIPPLES FACING AWAY FROM THE SILT FABRIC.
5. ATTACH THE FABRIC TO EACH POST WITH THREE TIES, ALL SPACED WITHIN THE TOP 8 INCHES OF THE FABRIC. ATTACH EACH TIE DIAGONALLY 45 DEGREES THROUGH THE FABRIC, WITH EACH PUNCTURE AT LEAST 1 INCH VERTICALLY APART. ALSO, EACH TIE SHOULD BE POSITIONED TO HANG ON A POST NIPPLE WHEN TIGHTENED TO PREVENT SAGGING.
6. WRAP APPROXIMATELY 6 INCHES OF FABRIC AROUND THE END POSTS AND SECURE WITH 3 TIES.
7. NO MORE THAN 24 INCHES OF A 36 INCH FABRIC IS ALLOWED ABOUVE GROUND LEVEL.
8. THE INSTALLATION SHOULD BE CHECKED AND CORRECTED FOR ANY DEVIATIONS BEFORE COMPACTION.
9. COMPACTION IS VITALLY IMPORTANT FOR EFFECTIVE RESULTS. COMPACT THE SOIL IMMEDIATELY NEXT TO THE SILT FENCE FABRIC WITH THE FRONT WHEEL OF THE TRACTOR, SKID STEER, OR ROLLER EXERTING AT LEAST 60 POUNDS PER SQUARE INCH. COMPACT THE UPSTREAM SIDE FIRST, AND THEN EACH SIDE TWICE FOR A TOTAL OF 4 TRIPS.

TYPICAL SILT FENCE DTAIL (1 / C6)
NOT TO SCALE

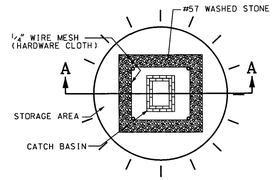

PLAN VIEW

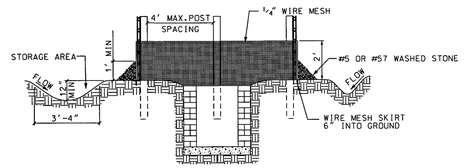

SECTION A-A

GENERAL NOTES:

1. SEDIMENT SHALL BE REMOVED AND TRAP RESTORED TO ITS ORIGINAL DIMENSIONS WHEN THE SEDIMENT HAS ACCUMULATED TO 1/2 THE DESIGN DEPTH OF THE TRAP.
2. REMOVED SEDIMENT SHALL BE DEPOSITED IN A SUITABLE AREA AND IN SUCH A MANNER THAT IT WILL NOT ERODE.
3. THE STRUCTURE SHALL BE INSPECTED AFTER EACH STORM EVENT AND REPAIRS MADE AS NECESSARY.
4. CONSTRUCTION OPERATIONS SHALL BE CARRIED OUT IN SUCH A MANNER THAT EROSION AND WATER POLLUTION ARE MINIMIZED.
5. THE SEDIMENT TRAP SHALL BE REMOVED AND THE AREA STABLIZED WHEN THE DRAINAGE BASIN HAS BEEN PROPERLY STABLIZED.
6. WIRE MESH INSTALLATION SHALL BE IN ACCORDANCE WITH STD. NO. 20.05.
7. WIRE MESH SHALL BE HARDWARE CLOTH 23 GUAGE MIN. ABD SHALL HAVE 1/4 INCH MESH OPENINGS.

INLET PROTECTION DETAILS (2 / C6)
NOT TO SCALE

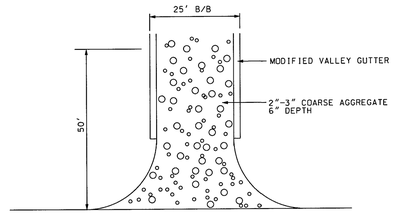

EXISTING ROAD

CONSTRUCTION ENTRANCE DETAIL (3 / C6)
NOT TO SCALE

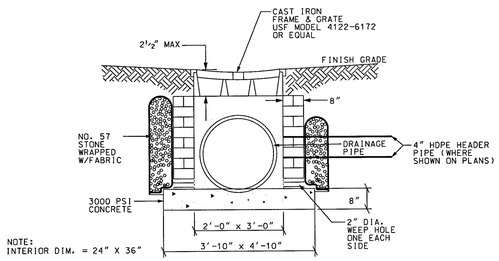

NOTE:
INTERIOR DIM. = 24" X 36"

INLET PROTECTION DETAILS (5 / C6)
NOT TO SCALE

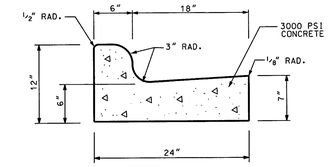

STANDARD CURB & GUTTER (24") (4 / C6)
NOT TO SCALE

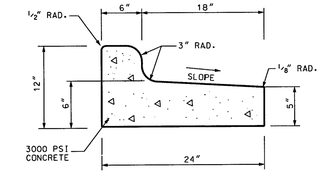

SPILL GUTTER (24") (6 / C6)
NOT TO SCALE

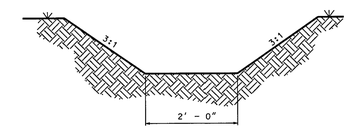

SWALE SECTION (7 / C6)
NOT TO SCALE

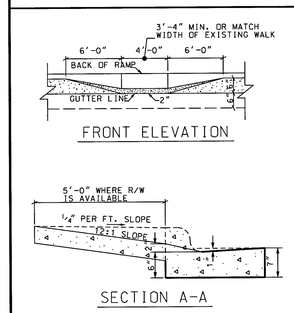

GENERAL NOTES:
ENGINEER MAY SPECIFY LOCATION. RAMP TO ALIGN WITH EXISTING OR PROPOSED WALKS.
GRADE CHANGES FROM SIDEWALK TO RAMP TO BE A MAXIMUM OF 12:1. DISTANCE TO BE GOVERNED BY GRADE.
IN CASES WHERE THE 5'-0" LENGTH OF RAMP CAN BE ACHIVED, KEEP BACK OF WALK ON UNIFORM GRADE.

HANDICAP RAMP DETAILS (8 / C6)
NOT TO SCALE

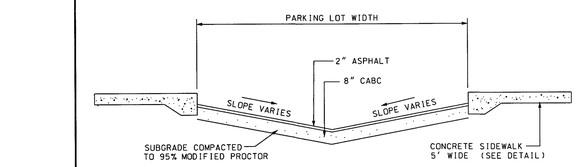

TYPICAL PARKING LOT SECTION (9 / C6)
NOT TO SCALE

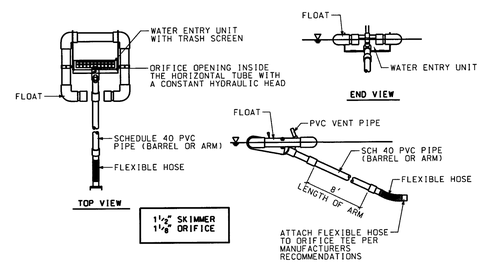

FAIRCLOTH SKIMMER (10 / C6)
NOT TO SCALE

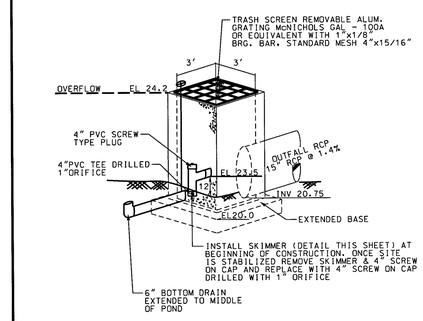

OVERFLOW DEVICE (11 / C6)
NOT TO SCALE

PROJECT NO: P1540-004
DRAWING NO: 006

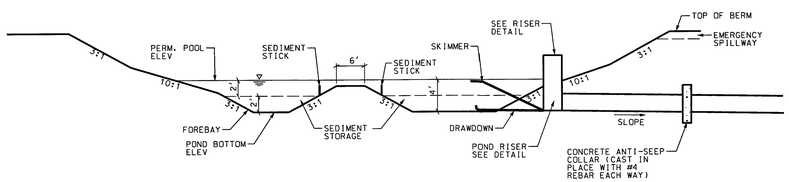

NOTES:

1. CONTRACTOR SHALL NOT CONSTRUCT FOREBAY UNTIL SITE IS STABALIZED AND SEDIMENT BASIN IS CONVERTED TO WET POND.
2. PLACE A SEDIMENT STICK IN SLOPE OF BASIN TO PROVIDE 2 FEET OF SEDIMENT STORAGE.
3. AT CONCLUSION OF PROJECT, CORE DRILL THE DRAWDOWN DIP PIOPE IN THE RISER SO THAT THE INVERT IS AT THE PERMANENT POOL ELEVATION AND REMOVE SKIMMER INSTALLED ON DRAWDOWN PIPE.

POND CROSS SECTION (12 / C6)
NOT TO SCALE

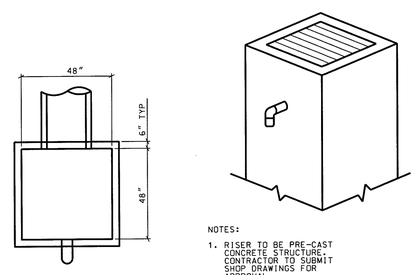

NOTES:

1. RISER TO BE PRE-CAST CONCRETE STRUCTURE. CONTRACTOR TO SUBMIT SHOP DRAWINGS FOR APPROVAL.
2. 4'x4' CONCRETE RISER STRUCTURE WITH 36"X36" FRAME AND GRATE.

RISER DETAILS (13 / C6)
NOT TO SCALE

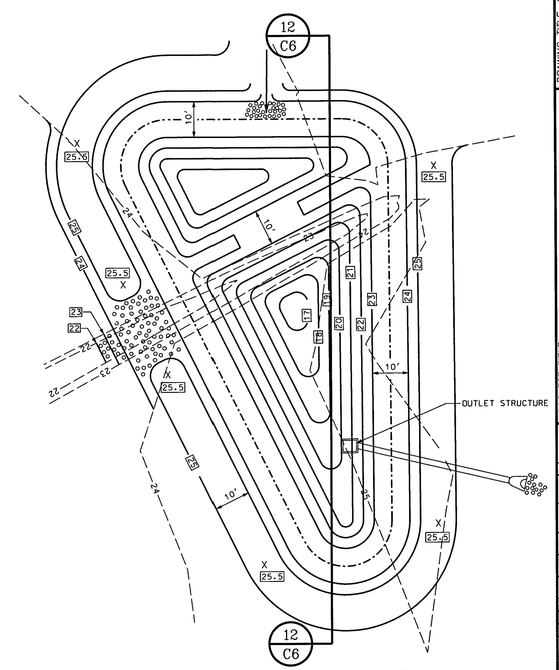

POND "B" (A / C6)
NOT TO SCALE

STROUD ENGINEERING, P.A.
107B COMMERCE STREET
GREENVILLE, NC 27858
(252) 756-9332
LICENSE NO. C-0647
SEAL: RICHARD A. BROWN, P.E.

CONSTRUCTION DOCUMENTS
NORTH CAROLINA PROFESSIONAL SEAL 8685 ENGINEER RICHARD A. BROWN
SEAL NOT VALID UNLESS SIGNED AND DATED

DESIGNED BY:
FACILITIES DESIGN
ARCHITECTS & ENGINEERS
FACILITIES MANAGEMENT DIVISION, NCDOT
1 SOUTH WILMINGTON STREET
RALEIGH, NORTH CAROLINA 27601
PHONE:919/707-4340 FAX:919/715-0399

STATE OF NORTH CAROLINA DEPARTMENT OF TRANSPORTATION

CONSULTANT:

DRAWING TITLE / DESCRIPTION: DETAILS

PROJECT TITLE:
CASTLE HAYNE MULTI-UNIT OFFICE BUILDING
NEW HANOVER COUNTY, DIVISION 3, NCDOT
5310 BARBADOS BLVD., SUITE 102
CASTLE HAYNE, NC 28429
NEW HANOVER COUNTY, NORTH CAROLINA

STATE CONSTRUCTION ID.# 15-12499-02A

ASSET NUMBER:
CO.# SITE.# BLDG.#
71 - - .

REVISIONS

NO.	DATE

DATE ISSUED: 1/09/18
DRAWN BY: LHJ
CHECKED BY: RAB
SHEET NO.
C6 OF 6

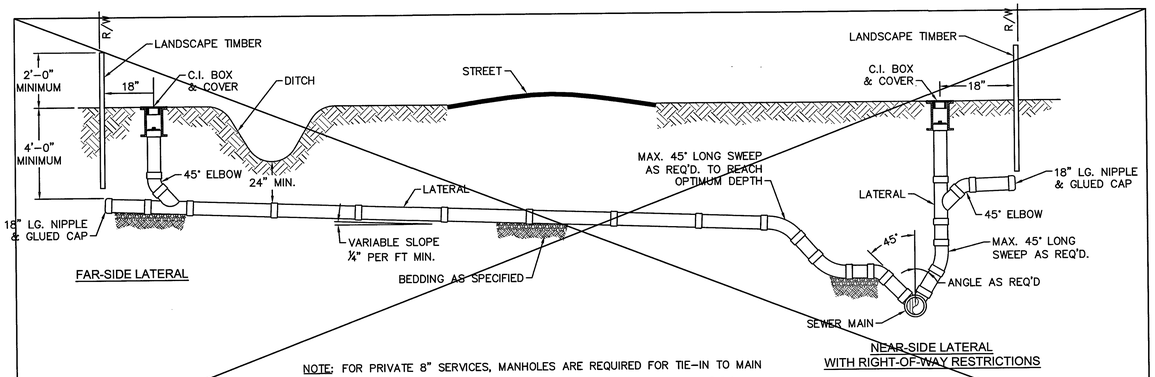

NOTE: FOR PRIVATE 8" SERVICES, MANHOLES ARE REQUIRED FOR TIE-IN TO MAIN

SD-19 STANDARD SERVICE CONNECTION TO SANITARY SEWER

NOT TO SCALE

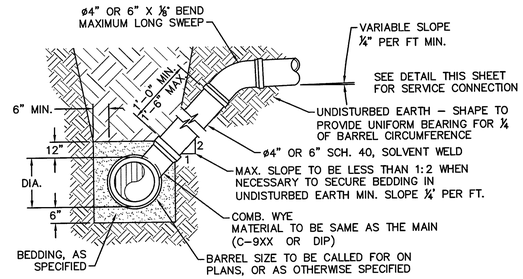

NOTE: FOR PRIVATE 8" SERVICES, MANHOLES ARE REQUIRED FOR CONNECTION TO SYSTEM AND AT THE PROPERTY LINE, WITH REQUIRED EASEMENT.

MAIN DEPTH LESS THAN 8 FT

SD-10 STANDARD SERVICE LATERAL

NOT TO SCALE

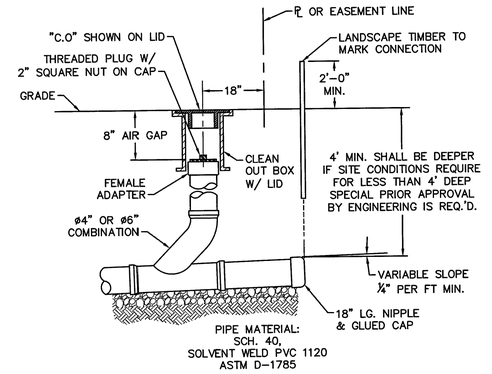

NOTE: FOR PRIVATE 8" SERVICES, MANHOLES ARE REQUIRED FOR CONNECTION TO SYSTEM AND AT THE PROPERTY LINE, WITH REQUIRED EASEMENT.

SD-11 SERVICE CONNECTION AND CLEAN-OUT

NOT TO SCALE

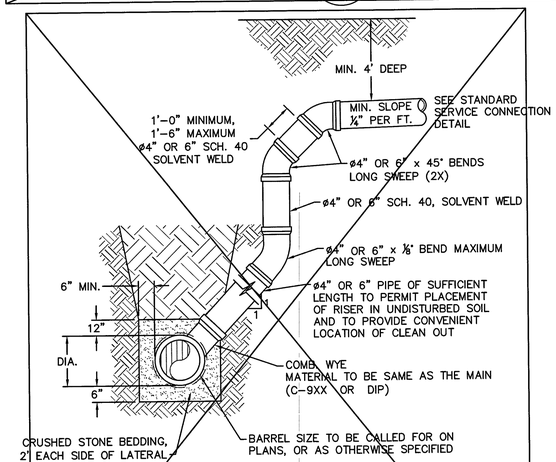

NOTES:
1. SPECIAL CARE SHALL BE TAKEN DURING BACKFILL OPERATIONS. THE RISER SHALL BE PLUMB AND TRUE AT ALL TIMES, AND REST ON FIRM, STABLE FOUNDATION.
2. FOR PRIVATE 8" SERVICES, MANHOLES ARE REQUIRED FOR CONNECTION TO SYSTEM AND AT THE PROPERTY LINE, WITH REQUIRED EASEMENT.

MAIN DEPTH GREATER THAN 8 FT

SD-12 DEEP SERVICE LATERAL

NOT TO SCALE

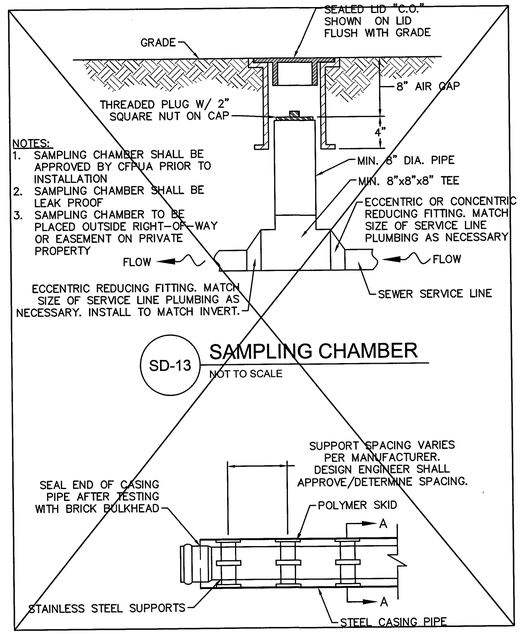

NOTES:
1. SAMPLING CHAMBER SHALL BE APPROVED BY CFPUA PRIOR TO INSTALLATION
2. SAMPLING CHAMBER SHALL BE LEAK PROOF
3. SAMPLING CHAMBER TO BE PLACED OUTSIDE RIGHT-OF-WAY OR EASEMENT ON PRIVATE PROPERTY

SD-13 SAMPLING CHAMBER

NOT TO SCALE

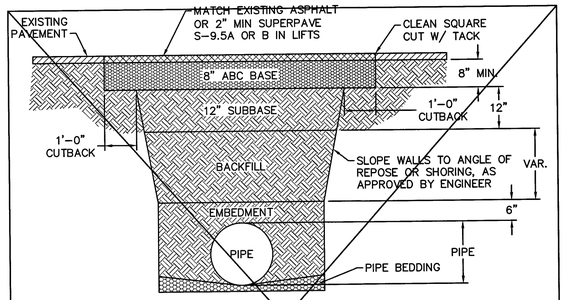

NOTES:
1. BACKFILL SHALL BE SUITABLE MATERIAL THAT IS FREE FROM HEAVY CLAY, GUMBOS, DEBRIS, ORGANICS AND LITTLE TO NO EXCESSIVE MOISTURE.
2. SELECT BACKFILL MAY BE SUBSTITUTED OR REQUIRED BY CITY TO ACHIEVE COMPACTION, (I.E. #57, ABC, CRUSHED LIMESTONE, CLEAN SAND, FLOWABLE FILL, ETC).
3. 8-INCH OF ABC BASE MATERIAL SHALL BE USED ON CITY STREETS.
4. BACKFILL AND BASE MATERIALS SHALL BE COMPACTED 12" MINIMUM LIFTS
5. SOIL SHALL BE COMPACTED BY A MECHANIZED TAMPER (I.E JUMPING JACK), HOWEVER, VIBRATORY ROLLERS > 18" WIDTH MAY BE USED FOR LARGER EXCAVATIONS. THE PLATE TAMP METHOD SHALL NOT BE USED.
6. ALL APPROVED CASTINGS SHALL BE SET FLUSH TO GRADE AND SUPPORTED IF APPLICABLE.
7. ABC BASE AND SUBBASE COMPACTED TO 98% AND BACKFILL AND EMBEDMENT COMPACTED TO 90% AS DETERMINED BY THE MODIFIED PROCTOR AASHTO METHOD T-99.
8. 1-FOOT CUTBACKS OF ASPHALT SHALL BE PREPARED ON UNDISTURBED SOIL. MINIMUM ASPHALT DENSITY IS 90%.

(FOR PRIVATE ROADS AND PAVED AREAS; CONTRACTOR TO MEET MIN. REQUIREMENTS AS DEFINED BY RIGHT-OF-WAY OWNER FOR PUBLIC ROAD REPAIRS)

SD-14 PAVEMENT REPAIR WHERE PIPE INSTALLED

NOT TO SCALE

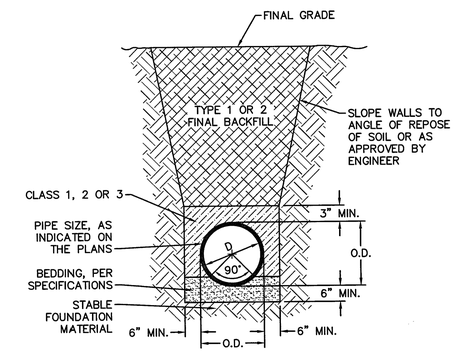

SD-15 TYPICAL TRENCH DETAIL

NOT TO SCALE

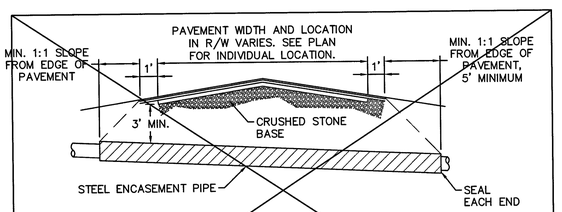

NOTES:
1. CASING WILL BE INSTALLED AT LINE AND GRADE SHOWN ON INDIVIDUAL PROFILE FOR EACH CROSSING. BORING/JACKING TO LINE AND GRADE IS REQUIRED.
2. TRACER WIRE SHALL BE CONTINUED THROUGH CASING.

SD-16 TYPICAL BORING/ JACKING DETAIL

NOT TO SCALE

NOTE: PIPE SUPPORT TO BE PLACED TO PROVIDE PROPER SUPPORT, ALIGNMENT, AND GRADE AS SPECIFIED. CONTINUOUS SUPPORTS MAY BE USED AS ALTERNATIVE. OIL, GREASE, OR PETROLEUM PRODUCT MAY NOT BE USED AS LUBRICANT.

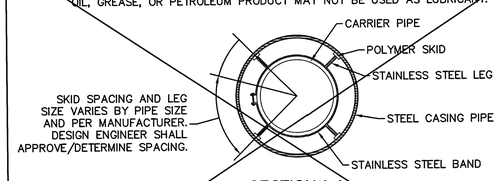

NOTE: ALL STAINLESS STEEL PARTS TO BE 316 SST.

SD-17 PIPE CASING SUPPORT DETAIL

NOT TO SCALE

NOTE:
DETAILS PROVIDED PER CAPE FEAR PUBLIC UTILITY AUTHORITY STANDARDS, EDITING IS NOT ALLOWED.

GENERAL NOTES:
1. NO EXCAVATED MATERIAL SHALL BE PLACED IN ANY STREAM, DITCH OR DRAINAGE-WAY.
2. THE CONTRACTOR IS RESPONSIBLE FOR LOCATING ALL UNDERGROUND UTILITIES BEFORE ANY CONSTRUCTION BEGINS.
3. THE CONTRACTOR IS RESPONSIBLE FOR TEMPORARY SEDIMENT AND EROSION CONTROL MEASURES WHILE CONSTRUCTION IS IN PROGRESS.
4. THE CONTRACTOR IS RESPONSIBLE FOR STABILIZATION OF ALL DISTURBED AREAS.
5. THE CONTRACTOR IS RESPONSIBLE FOR LAY DOWN AND STOCKPILE AREAS (TO ARRANGE AND ENSURE COMPLIANCE WITH ALL LOCAL AND STATE REGULATIONS).

THE DETAILS SHOWN HEREON SUPERCEDE CFPUA WRITTEN TECHNICAL SPECIFICATIONS VERSIONS 1.00 - 1.04

STROUD ENGINEERING, PA
107-B COMMERCE ST.
GREENVILLE, NC 27858

RICHARD A. BROWN, P.E.

REV:	DESCRIPTION:	DATE:
1	SAMPLING CHAMBER REVISED	10/26/12
2	Revised Multiple Details	02/15/16

CFPUA SANITARY SEWER

STANDARD DETAILS

CAPE FEAR PUBLIC UTILITY AUTHORITY
235 GOVERNMENT CENTER DRIVE
WILMINGTON, NC 28403
OFFICE: (910)332-6560
Stewardship. Sustainability. Service.

DATE: 1/9/12
SCALE: N/A
DRAWN BY: CFPUA
CHECKED BY: CFPUA
PROJECT NO.:

SHEET NO: SSD-2

PROJECT NO: P1540-004
DRAWING NO: 007

\\cfpua-share\Departments\Engineers\CFPUA Standard Details\CAD Files\CFPUA-Sewer Details.dwg, 5/18/2016 8:51:12 AM, justin.hawes

NOTES:
1. NO JOINT SHALL BE INSTALLED BETWEEN THE MAIN SERVICE TAP AND THE METER STOP. ALL SERVICES SHALL BE INSTALLED PERPENDICULAR TO MAIN.
2. SERVICE SADDLES ON PVC MAINS SHALL BE WIDE BAND BRASS BODY: SADDLE McDONALD 3801 OR EQUIVALENT.
3. METER BOXES SUSCEPTIBLE TO TRAFFIC SHALL CONFORM TO ASTM A48, CLASS 30B AND AASHTO H20 LOAD RATING STANDARDS (SIP MODEL 4242, OR APPROVED EQUIVALENT).

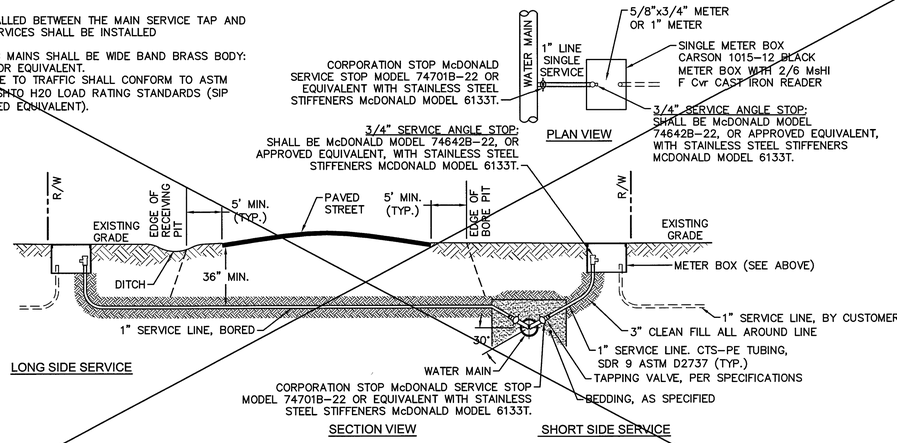

NOTE:
TYPICAL WATER SERVICE CONNECTION FOR RESIDENTIAL SINGLE FAMILY HOME ON CFPUA WATER SYSTEM

WD-18 SINGLE SERVICE CONNECTION
NOT TO SCALE

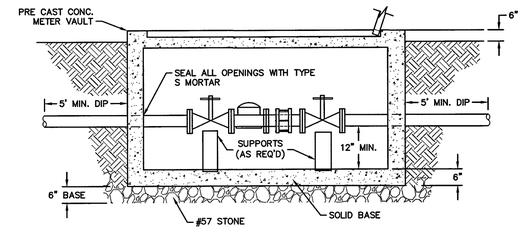

METER VAULT SECTION A-A

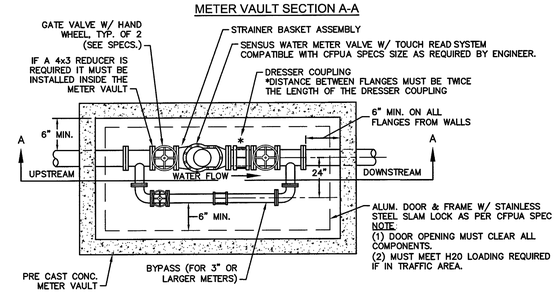

METER VAULT PLAN

FOR WATER METERS LARGER THAN 2"

WD-1 WATER METER VAULT
NOT TO SCALE

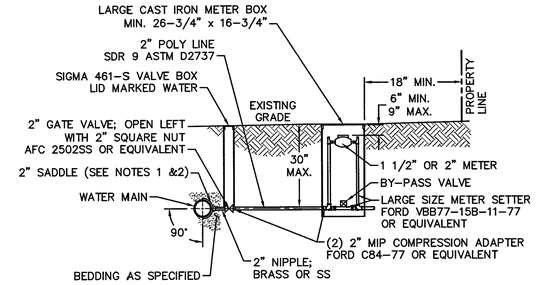

NOTES:
1. ALL SERVICES SHALL BE INSTALLED PERPENDICULAR TO MAIN.
2. SERVICE SADDLES ON PVC MAINS SHALL BE WIDE BAND BRASS BODY: McDONALD 3800, FORD S90 (DOUBLE STRAP) OR EQUIVALENT.
3. METER BOXES SUSCEPTIBLE TO TRAFFIC SHALL CONFORM TO ASTM A48, CLASS 30B AND AASHTO H20 LOAD RATING STANDARDS (OLDCASTLE PRECAST MODEL B1730 OR APPROVED EQUIVALENT).
4. METER BOXES SUSCEPTIBLE TO INCIDENTAL, NON-DELIBERATE TRAFFIC SHALL CONFORM TO ANSI/SCTE 77 TIER 15 LOAD RATING STANDARDS (SYNERTECH MODEL DUO 17x30 OR APPROVED EQUIVALENT).
5. NON-TRAFFIC METER BOXES SHALL BE SIGMA MB2203 OR APPROVED EQUIVALENT.
6. 3" CLEAN FILL REQUIRED ALL AROUND 2" POLY SERVICE LINE.

FOR 1-1/2" OR 2" WATER SERVICES

WD-11 LARGE METER
NOT TO SCALE

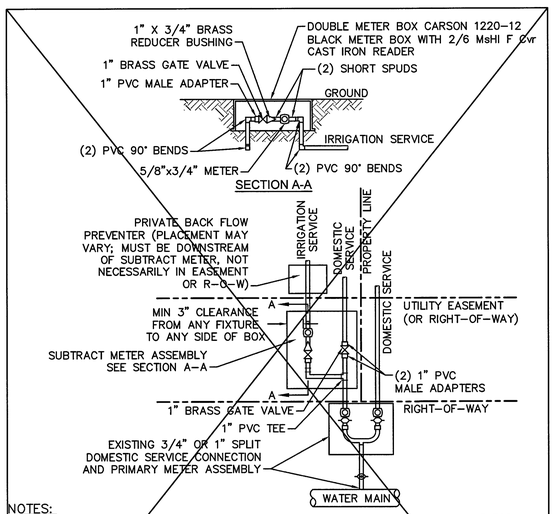

NOTES:
1. BEYOND THE PRIMARY DOMESTIC METER ASSEMBLY, CFPUA IS ONLY RESPONSIBLE FOR METER AND WASHERS OF SUBTRACT METER ASSEMBLY.
2. ALL PIPE AND FITTINGS UP TO FINAL SERVICE LINE TO BE 1" EXCLUDING METERS.

PLAN VIEW

(MULTIPLE DOMESTIC SERVICES PER TAP)

DOUBLE SERVICE CONNECTION USING SUBTRACT METER

WD-8
NOT TO SCALE

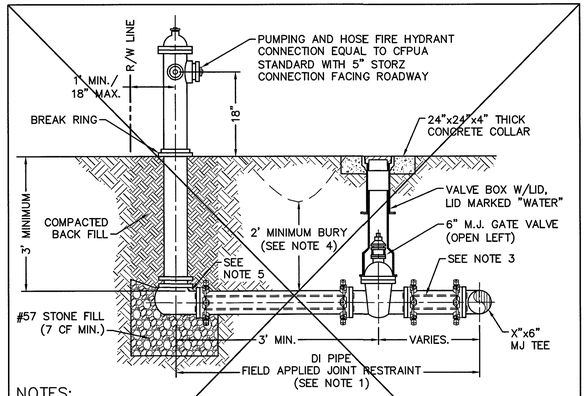

NOTES:
1. JOINT RESTRAINT SYSTEMS SHALL BE WEDGE ACTION STYLE FOR DI PIPE AS MANUFACTURED BY EBAA IRON, SIGMA, STAR PIPE PRODUCTS OR APPROVED EQUAL.
2. WHEN HYDRANT LEGS REQUIRE FULL LENGTH PIPE SECTIONS, OVER BELL RESTRAINT SYSTEM SHALL HAVE 316 STAINLESS STEEL HARNESS AND FASTENERS.
3. CONTINUOUS 316 STAINLESS STEEL RODS (TEE TO VALVE AND VALVE TO HYDRANT) MAY BE USED WITH COR-BLUE MJ T-BOLT AND GASKET KITS, AS AN ALTERNATIVE.
4. HYDRANT AND VALVE SHALL BE PLACED OUTSIDE DITCH LIMITS.
5. WEEP HOLES OPEN AND UNBLOCKED TO DRAIN.

WD-10 FIRE HYDRANT ASSEMBLY
NOT TO SCALE

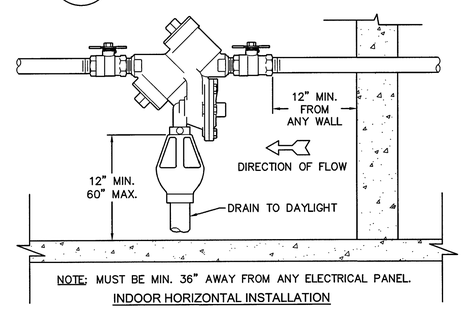

NOTE: MUST BE MIN. 36" AWAY FROM ANY ELECTRICAL PANEL.

INDOOR HORIZONTAL INSTALLATION

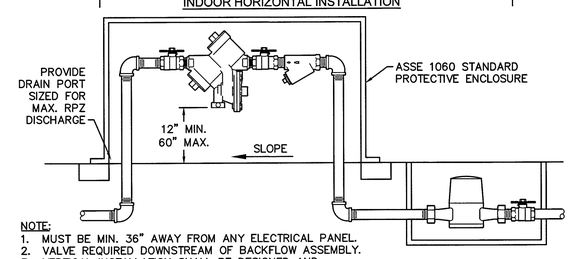

NOTE:
1. MUST BE MIN. 36" AWAY FROM ANY ELECTRICAL PANEL.
2. VALVE REQUIRED DOWNSTREAM OF BACKFLOW ASSEMBLY.
3. VERTICAL INSTALLATION SHALL BE DESIGNED AND SUBMITTED TO CFPUA ESMD FOR APPROVAL.

OUTDOOR HORIZONTAL INSTALLATION

WD-12 REDUCED PRESSURE PRINCIPLE ASSEMBLY
NOT TO SCALE

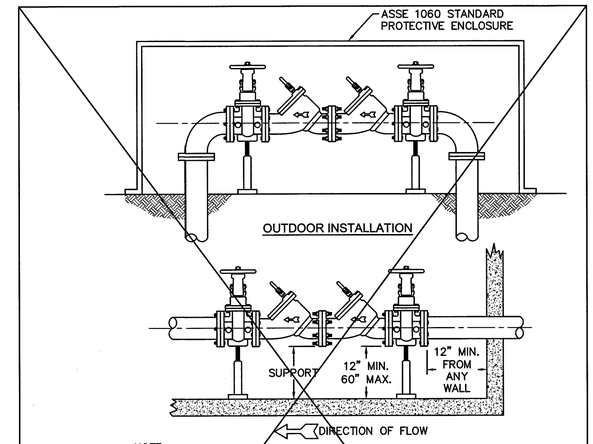

NOTE:
1. MUST BE MIN. 36" AWAY FROM ANY ELECTRICAL PANEL.
2. VALVE REQUIRED DOWNSTREAM OF BACKFLOW ASSEMBLY.
3. VERTICAL INSTALLATION SHALL BE DESIGNED AND SUBMITTED TO CFPUA ESMD FOR APPROVAL

INDOOR INSTALLATION

WD-7 DOUBLE CHECK VALVE ASSEMBLY
NOT TO SCALE

GENERAL NOTES:
1. NO EXCAVATED MATERIAL SHALL BE PLACED IN ANY STREAM, DITCH OR DRAINAGE-WAY.
2. THE CONTRACTOR IS RESPONSIBLE FOR LOCATING ALL UNDERGROUND UTILITIES BEFORE ANY CONSTRUCTION BEGINS.
3. THE CONTRACTOR IS RESPONSIBLE FOR TEMPORARY SEDIMENT AND EROSION CONTROL MEASURES WHILE CONSTRUCTION IS IN PROGRESS.
4. THE CONTRACTOR IS RESPONSIBLE FOR STABILIZATION OF ALL DISTURBED AREAS.
5. THE CONTRACTOR IS RESPONSIBLE FOR LAY DOWN AND STOCKPILE AREAS (TO ARRANGE AND ENSURE COMPLIANCE WITH ALL LOCAL AND STATE REGULATIONS).

THE DETAILS SHOWN HEREON SUPERCEDE CFPUA WRITTEN TECHNICAL SPECIFICATIONS VERSIONS 1.00 - 1.04

NOTE:
DETAILS PROVIDED PER CAPE FEAR PUBLIC UTILITY AUTHORITY STANDARDS, EDITING IS NOT ALLOWED.

CAPE FEAR PUBLIC UTILITY AUTHORITY STANDARD NOTES:

1. SEWER GUARDS REQUIRED AT ALL MANHOLES. STAINLESS STEEL SEWER GUARDS REQUIRED AT MANHOLES LOCATED IN TRAFFIC AREAS.
2. WATER AND SEWER SERVICES SHALL BE PERPENDICULAR TO MAIN AND TERMINATE AT RIGHT-OF-WAY LINE. SEWER SERVICES IN CUL-DE-SACS ARE REQUIRED TO BE PERPENDICULAR, OR MUST ORIGINATE IN END OF LINE MANHOLE AND TERMINATE AT RIGHT-OF-WAY LINE.
3. ALL SERVICES TYING INTO DUCTILE IRON MAINS SHALL BE CONSTRUCTED OF CLASS 50, DIP, WITH PROTECTO 401 CERAMIC EPOXY LINING.
4. MINIMUM 10' UTILITIES EASEMENT PROVIDED ALONG THE FRONTAGE OF ALL LOTS AND AS SHOWN FOR NEW DEVELOPMENTS.
5. NO FLEXIBLE COUPLINGS SHALL BE USED.
6. ALL STAINLESS STEEL FASTENERS SHALL BE 316.
7. CLEANOUTS SHALL BE LOCATED A MINIMUM OF 12 FEET FROM ALL PROPERTY CORNERS. WATER METER BOXES ARE TO BE A MINIMUM OF 5 FEET FROM THE PROPERTY CORNER.

WD-19 STANDARD NOTES
(REQUIRED ON ALL PLAN AND PROFILE SHEETS)

STROUD ENGINEERING, PA
107-B COMMERCE ST.
GREENVILLE, NC 27858

RICHARD A. BROWN, P.E.

PROJECT NO: P1540-004
DRAWING NO: 008

REV:	DESCRIPTION:	DATE:
1	Single Service Connection, Double Service Connection, and Large Meter Revised	10/26/12
2	Single Service Connection and Fire Hydrant Details Revised	7/23/13
3	Fire Hydrant Detail Revised	01/03/14
4	Revised Fire Hydrant Assembly To Show 5" STORZ Connection	04/10/15
5	Revised Fire Hydrant Assembly To Show Full DIP Hydrant Leg	01/19/16
6	Revised Water Meter Vault and Large Meter Details, Added Standard Notes	02/15/16

CFPUA WATER DISTRIBUTION SYSTEM

STANDARD DETAILS

CAPE FEAR PUBLIC UTILITY AUTHORITY
235 GOVERNMENT CENTER DRIVE
WILMINGTON, NC 28403
OFFICE: (910)332-6560
Stewardship. Sustainability. Service.

DATE: 1/9/12
SCALE: N/A
DRAWN BY: CFPUA
CHECKED BY: CFPUA
PROJECT NO. :

SHEET NO: WSD-1

S:\Engineers\CFPUA Standard Details\CAD Files\CFPUA Water Details.dwg, 2/15/2016 3:31:12 PM, johns.scott

GENERAL NOTES:

1. ALL INTERIOR DIMENSIONS ARE TO FACE OF STUD.
2. ALL EXTERIOR DIMENSIONS ARE TO FACE OF MASONRY.
3. ALL INTERIOR WALLS TO HAVE R-15 UNFACED FIBERGLASS BATT INSULATION FOR SOUND ABATEMENT.
4. EXTERIOR WALLS ARE 2x6 STUDS @ 16" O.C
5. INTERIOR WALLS ARE 2x4 STUDS @ 16" O.C.
6. PROVIDE FIRE EXTINGUISHERS WITH SEMI RECESSED WALL CABINETS (FECB). SET TOP OF CABINETS A MAXIMUM OF 5'-0" AFF, AND WITH A MAXIMUM TRAVEL DISTANCE OF 75'-0".

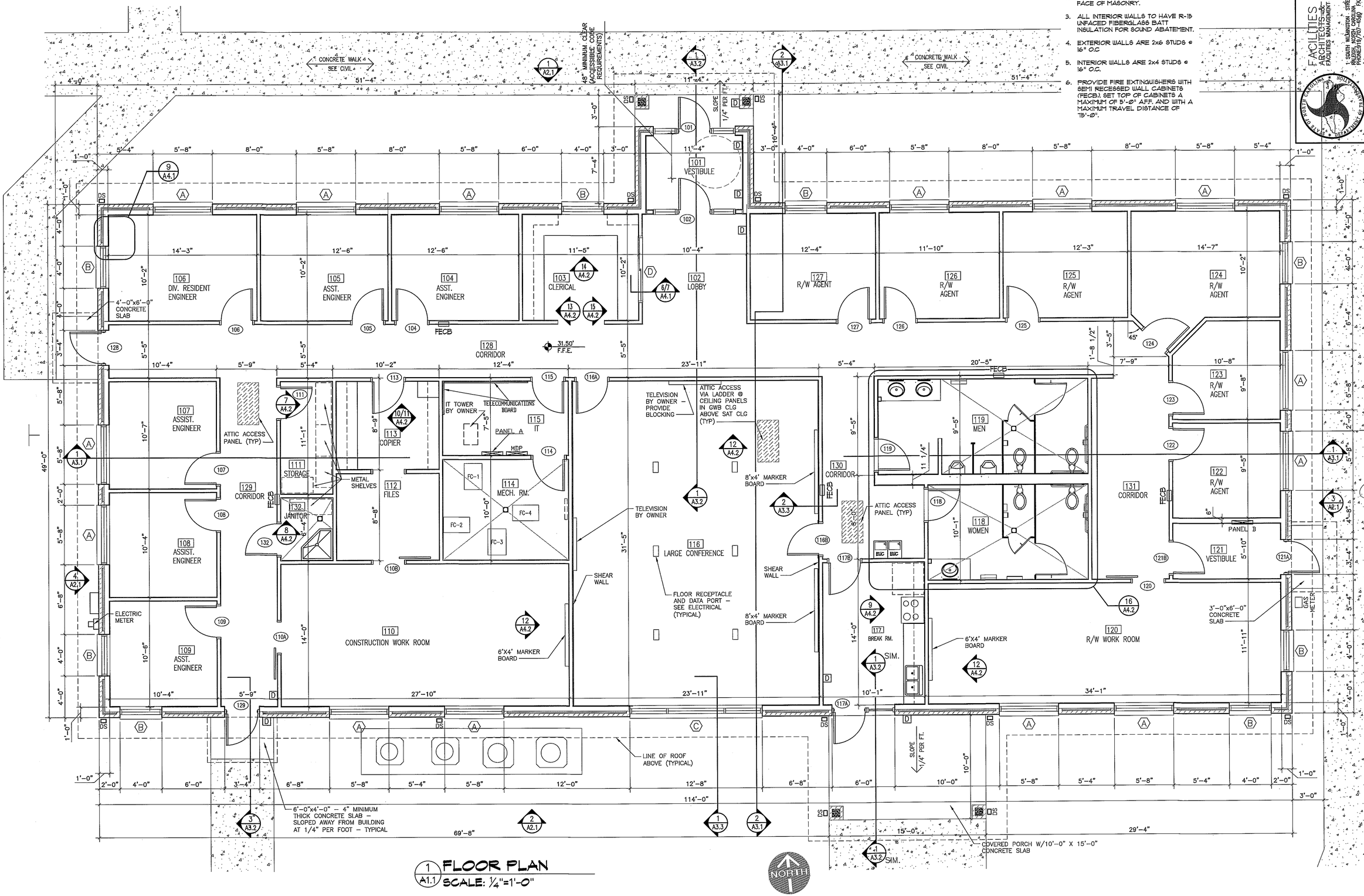

1 A1.1 FLOOR PLAN
SCALE: 1/4"=1'-0"

FACILITIES DESIGN
ARCHITECTS & ENGINEERS
FACILITIES MANAGEMENT DIVISION, NCDOT
1 SOUTH WILMINGTON STREET
RALEIGH, NORTH CAROLINA 27601
PHONES 919/707-4540 FAX 919/715-0399

BURNETTE • CHALK ARCHITECTURE & PLANNING, P.A.
105 BANKS STREET MOREHEAD CITY, NC 28557
252-726-5387 252-726-3099 fax 252-726-1250 info@burnettechalk.com

CONSULTANTS:

REVISIONS:
15 SEPTEMBER 2017

NCDOT DIVISION III MULTI-UNIT BUILDING
CASTLE HAYNE SITE - 5501 BARBADOS BLVD.
CASTLE HAYNE, NORTH CAROLINA 28429
SCO# 15-124999-02A
FLOOR PLAN

PROJECT #16005
DRAWN: CBH
CHECKED: MKC
APPROVED: OWNER
DATE: 05 FEB 2018
PHASE: CD

A1.1

these drawings and specifications represent an instrument of service and as such shall remain in ownership with the architect. use or reproduction by any means, in whole or in part, without the architect's consent, is prohibited.

\\fileserver\data\work\16005 NCDOT Division III Castle Hayne Office Building\Drawings\Construction Documents\004 - Castle Hayne - A1.1 - Floor Plan.dwg, Layout1, 2/6/2018 2:07:59 PM, 1:1

REFLECTED CEILING LEGEND			
	SUPPLY AIR GRILLE	OD	FLUSH MOUNT FIXTURE (6" DISK)
	RETURN AIR GRILLE	OE	RECESSED LIGHT FIXTURE (6" CAN)
	WET AREA EXHAUST FAN		BATTERY POWERED EMERGENCY LIGHT
	WALL MOUNTED EXIT LIGHT		EXTERIOR LED WALLPACK
	BATTERY BACKED UP FLUORESCENT LIGHT FIXTURE		ATTIC ACCESS SCUTTLE HATCH IN GYPSUM BOARD CEILING
	EXTERIOR DECORATIVE WALL SCONCE	DS	TYPICAL GUTTER AND DOWNSPOUT (DS) LOCATION WITH DS PIPE ROUTING INDICATED WITH DASHED LINES
	FLUORESCENT LIGHT FIXTURE		

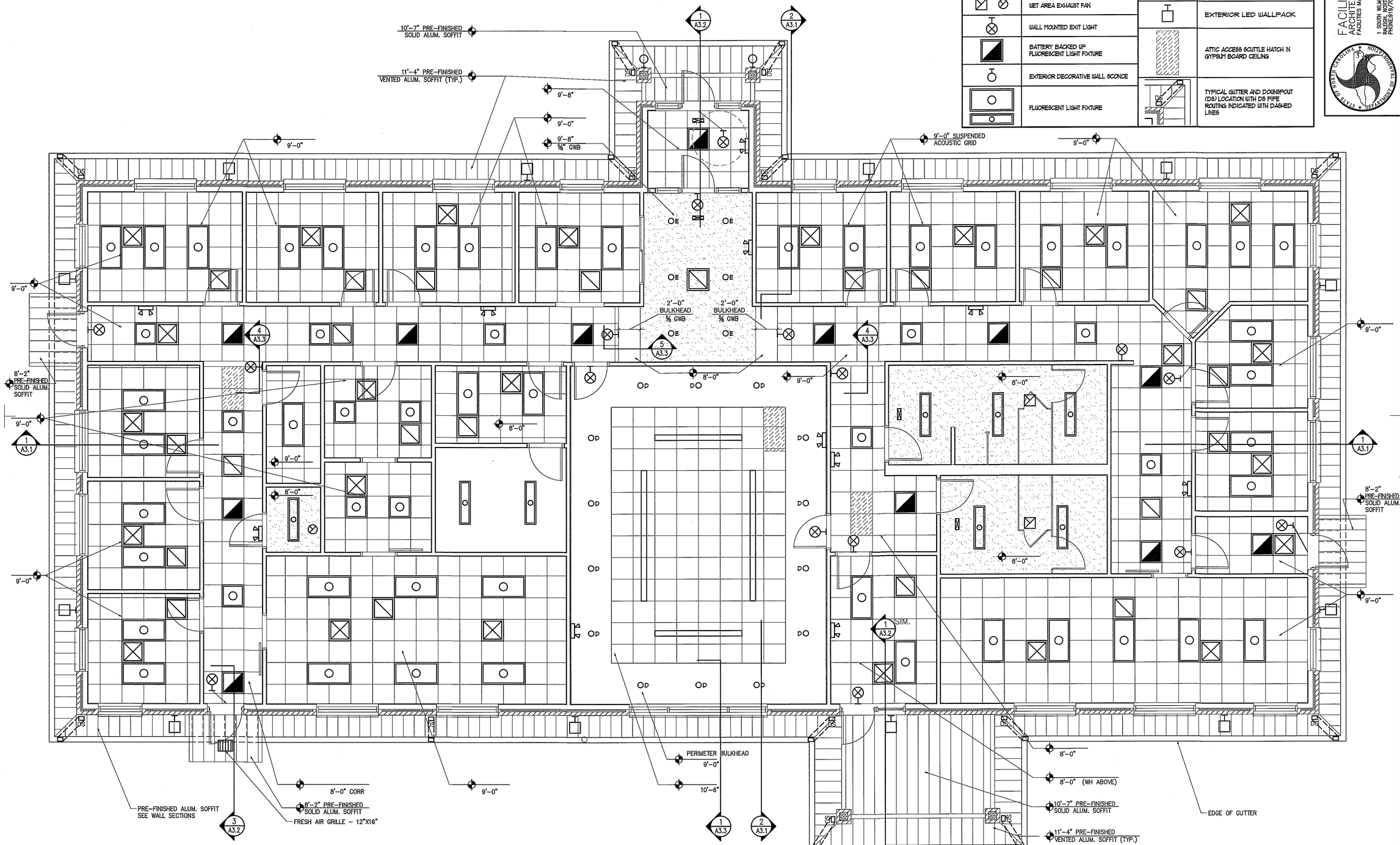

1 A1.2 REFLECTED CEILING PLAN
SCALE: 1/4"=1'-0"

0 2' 4' 6' 8'

these drawings and specifications represent an instrument of service and as such shall remain in ownership with the architect. use or reproduction by any means, in whole or in part, without the architect's consent, is prohibited.

FACILITIES DESIGN
ARCHITECTS & ENGINEERS
FACILITIES MANAGEMENT DIVISION, NCDOT
1 SOUTH WILMINGTON STREET
RALEIGH, NORTH CAROLINA 27601
PHONE919/707-4540 FAX919/715-0399

STATE OF NORTH CAROLINA DEPARTMENT OF TRANSPORTATION

BURNETTE • CHALK ARCHITECTURE & PLANNING, P.A.
105 BANKS STREET MOREHEAD CITY, NC 28557
252-726-5387 252-726-3099 fax 252-726-1830 info@burnettechalk.com

REGISTERED ARCHITECT 52961 NORTH CAROLINA

KENNETH W. BURNETTE REGISTERED ARCHITECT 3092 NORTH CAROLINA MOREHEAD CITY, N.C.

MARGARET KELLUM CHALK REGISTERED ARCHITECT 11614 NORTH CAROLINA MOREHEAD CITY, N.C.

CONSULTANTS:

REVISIONS:

NCDOT DIVISION III MULTI-UNIT BUILDING
CASTLE HAYNE SITE - 5501 BARBADOS BLVD.
CASTLE HAYNE, NORTH CAROLINA 28429
SCO# 15-12499-02A
REFLECTED CEILING PLAN

PROJECT #16005
DRAWN: CHH
CHECKED: MKC
APPROVED: MKC
DATE: 05 FEB 2018
PHASE: CD

A1.2

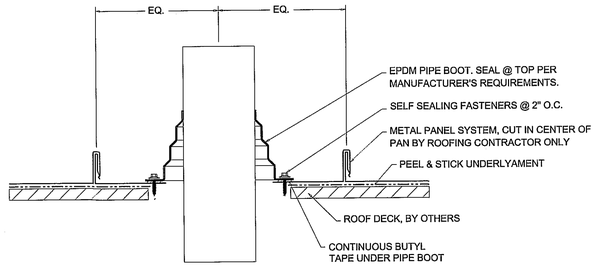

2 A1.3 VTR SECTION
NOT TO SCALE

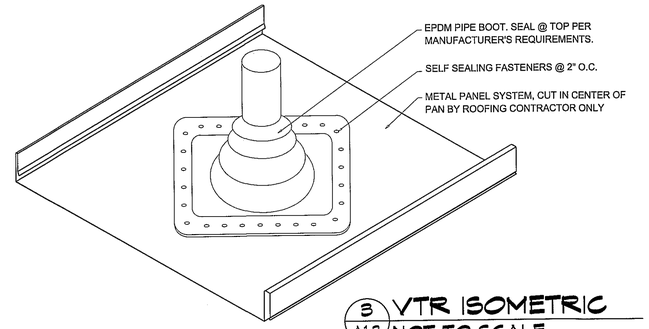

3 A1.3 VTR ISOMETRIC
NOT TO SCALE

6" GUTTERS WITH DOWNSPOUTS (DS) AS INDICATED

STANDING SEAM METAL ROOF

RIDGE VENT BY METAL ROOF MANUFACTURER (TYPICAL)

METAL ROOF CAP FOR EXHAUST FANS (TYPICAL)

METAL ROOF CAP FOR EXHAUST FANS (TYPICAL)

NOTE: PROVIDE SNOW GUARDS – SEE SPECIFICATIONS. TYPICAL AT ROOF PERIMETER.

NOTE: SEE DETAIL 2/A4.3 FOR VENT THROUGH ROOF DETAIL.

1 A1.3 ROOF PLAN
SCALE: 1/4"=1'-0"

NORTH

these drawings and specifications represent an instrument of service and as such shall remain in ownership with the architect. use or reproduction by any means, in whole or in part, without the architect's consent, is prohibited.

FACILITIES DESIGN
ARCHITECTS & ENGINEERS
FACILITIES MANAGEMENT DIVISION, NCDOT
1 SOUTH WILMINGTON STREET
RALEIGH, NORTH CAROLINA 27601
PHONES 919/707-4840 FAX 919/715-0399

STATE OF NORTH CAROLINA NOLLY MORRISON JR. DEPARTMENT OF TRANSPORTATION

REGISTERED ARCHITECTURAL CORPORATION NORTH CAROLINA 52961

BURNETTE • CHALK ARCHITECTURE & PLANNING, P.A.
105 BANKS STREET MOREHEAD CITY, NC 28557
252/726-5387 252/726-1029 fax 252/726-1750 info@burnettechalk.com

KENNETH W. BURNETTE REGISTERED ARCHITECT 3092 NORTH CAROLINA MOREHEAD CITY, N.C.

MARGARET KELLY CHALK REGISTERED ARCHITECT 11614 NORTH CAROLINA MOREHEAD CITY, N.C.

CONSULTANTS:

REVISIONS:

NCDOT DIVISION III MULTI-UNIT BUILDING
CASTLE HAYNE SITE - 5501 BARBADOS BLVD.
CASTLE HAYNE, NORTH CAROLINA 28429
SCO# 15-12499-02A
ROOF PLAN

PROJECT #16005
DRAWN: CHH
CHECKED: MKC
APPROVED: MKC
DATE: 05 FEB 2018
PHASE: CD

A1.3

\\Bpserver\data\acad\proj\16005 NCDOT Division III Castle Hayne Office Building\Drawings\Construction Documents\005 - Castle Hayne - A1.3 - Roof Plan.dwg, Layout1, 2/6/2018 2:11:11 PM, 1:1

WATER INTRUSION PREVENTION NOTES

1. WHERE WATER BARRIER IS ABOVE FLASHING, WATER BARRIER SHALL LAP OVER TOP OF FLASHING.
2. WHERE WATER BARRIER IS BELOW FLASHING, FLASHING SHALL LAP OVER TOP OF WATER BARRIER.
3. WATER BARRIER SHALL LAP OVER TOP OF FLASHING ABOVE WINDOWS AND DOORS.
4. DO NOT CAULK BOTTOM FLANGE OF SELF FLASHING WINDOWS.
5. CAULKING SHALL BE SONNEBORN NP-1 OR EQUAL.
6. PROVIDE FLASHING ABOVE ALL EXTERIOR DOORS AND WINDOWS, EXTERIOR ENVELOPE PENETRATIONS, ROOF/WALL INTERSECTIONS, AND AT ALL LOCATIONS REQUIRED TO PROVIDE PROTECTION, AND A WEATHER TIGHT STRUCTURE.
7. SEAL AROUND WINDOWS AND DOORS WITH BITUMINOUS TAPE APPLIED IN SHINGLE FASHION AT SILL, JAMBS AND HEAD.
8. SEAL AROUND THE MOUNTING BOXES OF ALL EXTERIOR LIGHT FIXTURES AND OTHER PENETRATIONS WITH CAULK OR BITUMINOUS TAPE SUCH THAT WIND DRIVEN RAIN CAN NOT PENETRATE BEHIND THE WATER BARRIER OR SHEATHING.

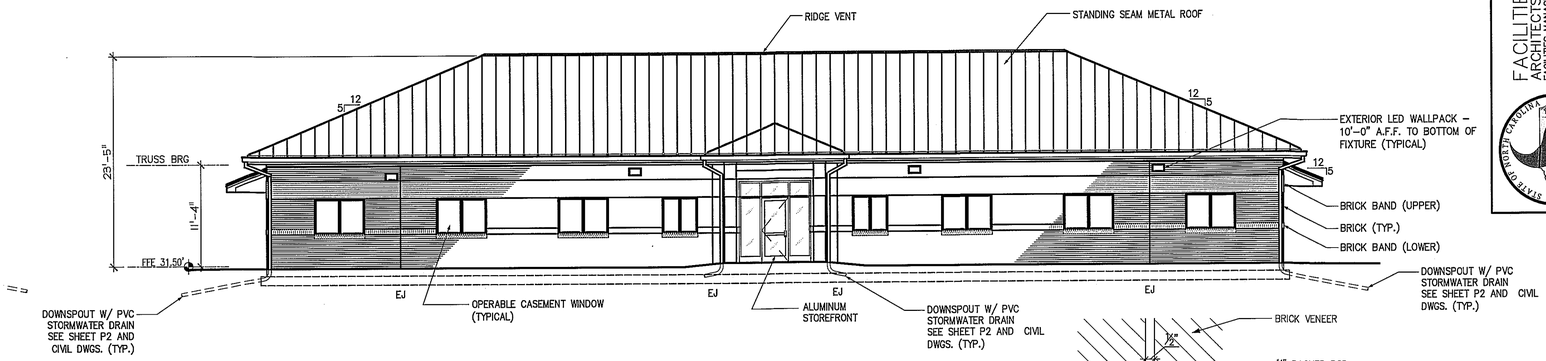

1 A2.1 NORTH ELEVATION
SCALE: 1/8" = 1'-0"

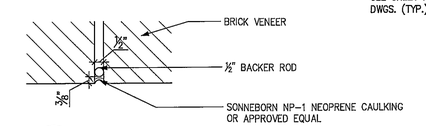

5 A2.1 EXPANSION JOINT (EJ) DETAIL
SCALE: 3" = 1'-0"

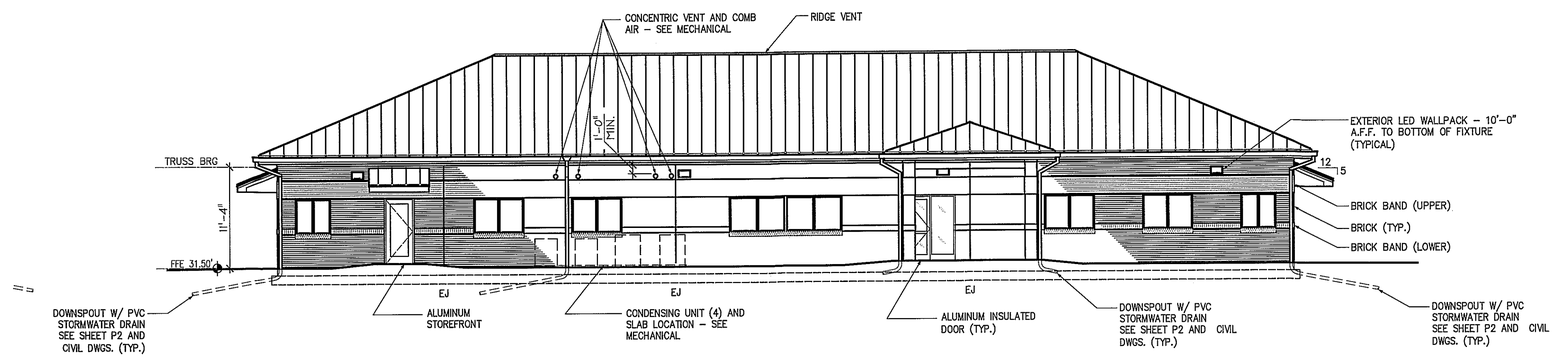

2 A2.1 SOUTH ELEVATION
SCALE: 1/8" = 1'-0"

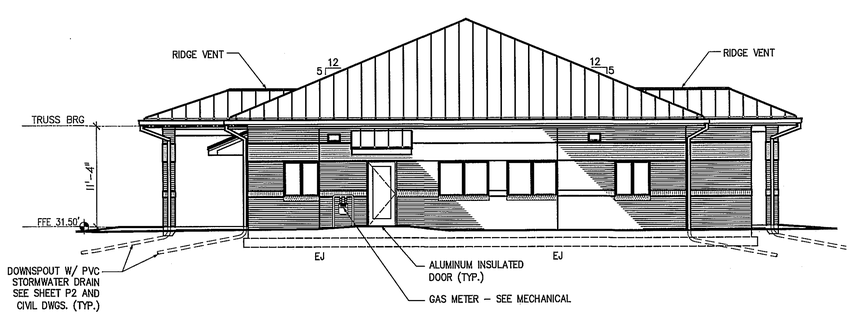

3 A2.1 EAST ELEVATION
SCALE: 1/8" = 1'-0"

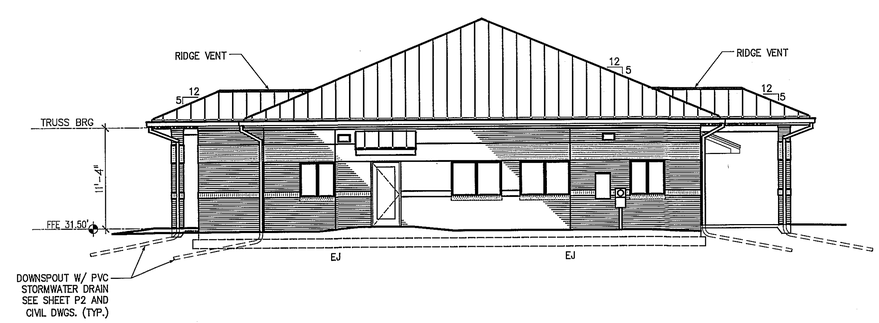

4 A2.1 WEST ELEVATION
SCALE: 1/8" = 1'-0"

FACILITIES DESIGN
ARCHITECTS & ENGINEERS
FACILITIES MANAGEMENT DIVISION, NCDOT
1 SOUTH WILMINGTON STREET
RALEIGH, NORTH CAROLINA 27601
PHONE:919/707-4540 FAX:919/715-0399
STATE OF NORTH CAROLINA * DEPARTMENT OF TRANSPORTATION *

52961
REGISTERED ARCHITECT
NORTH CAROLINA

BURNETTE • CHALK ARCHITECTURE & PLANNING, P.A.
105 BANKS STREET MOREHEAD CITY, NC 28557
252-726-5387 252-726-3099 fax 252-726-1250 info@bumchalk.com

KENNETH W. BURNETTE
REGISTERED ARCHITECT
3092
NORTH CAROLINA
MOREHEAD CITY, N.C.
05 Feb. 2018

MARGARET KELLIN CHALK
REGISTERED ARCHITECT
11614
NORTH CAROLINA
MOREHEAD CITY, N.C.
05 Feb. 2018

CONSULTANTS:

REVISIONS:

NCDOT DIVISION III MULTI-UNIT BUILDING
CASTLE HAYNE SITE - 5501 BARBADOS BLVD.
CASTLE HAYNE, NORTH CAROLINA 28429
SCO# 15-12499-02A
EXTERIOR ELEVATIONS

PROJECT #16005
DRAWN: CHH
CHECKED: MKC
APPROVED: MKC
DATE: 05 FEB 2018
PHASE: CD

A2.1

these drawings and specifications represent an instrument of service and as such shall remain in ownership with the architect. use or reproduction by any means, in whole or in part, without the architect's consent, is prohibited.

\\ftpserver\data\projects\16005 NCDOT Division III Castle Hayne Office Building\Drawings\Construction Documents\007 - Castle Hayne - A2.1 - Elevations.dwg, Layout1, 2/6/2018 2:11:51 PM, 1:1

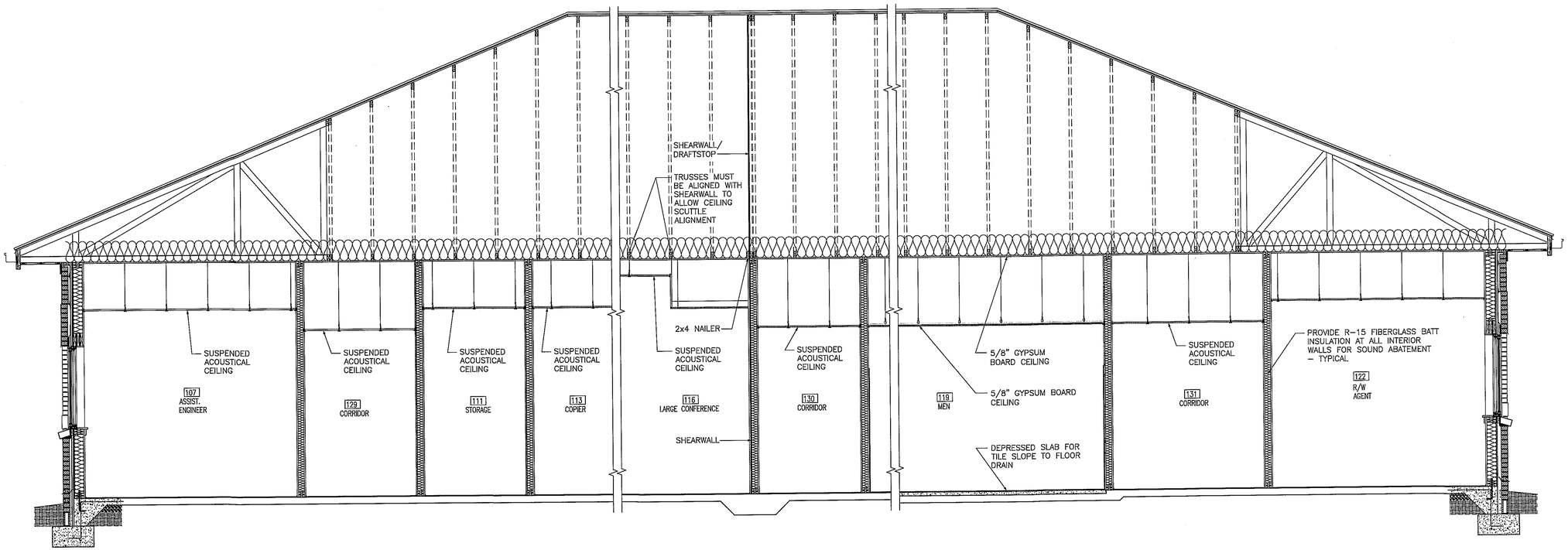

1 A3.1 LONGITUDINAL BUILDING SECTION
SCALE: 3/8" = 1'-0"

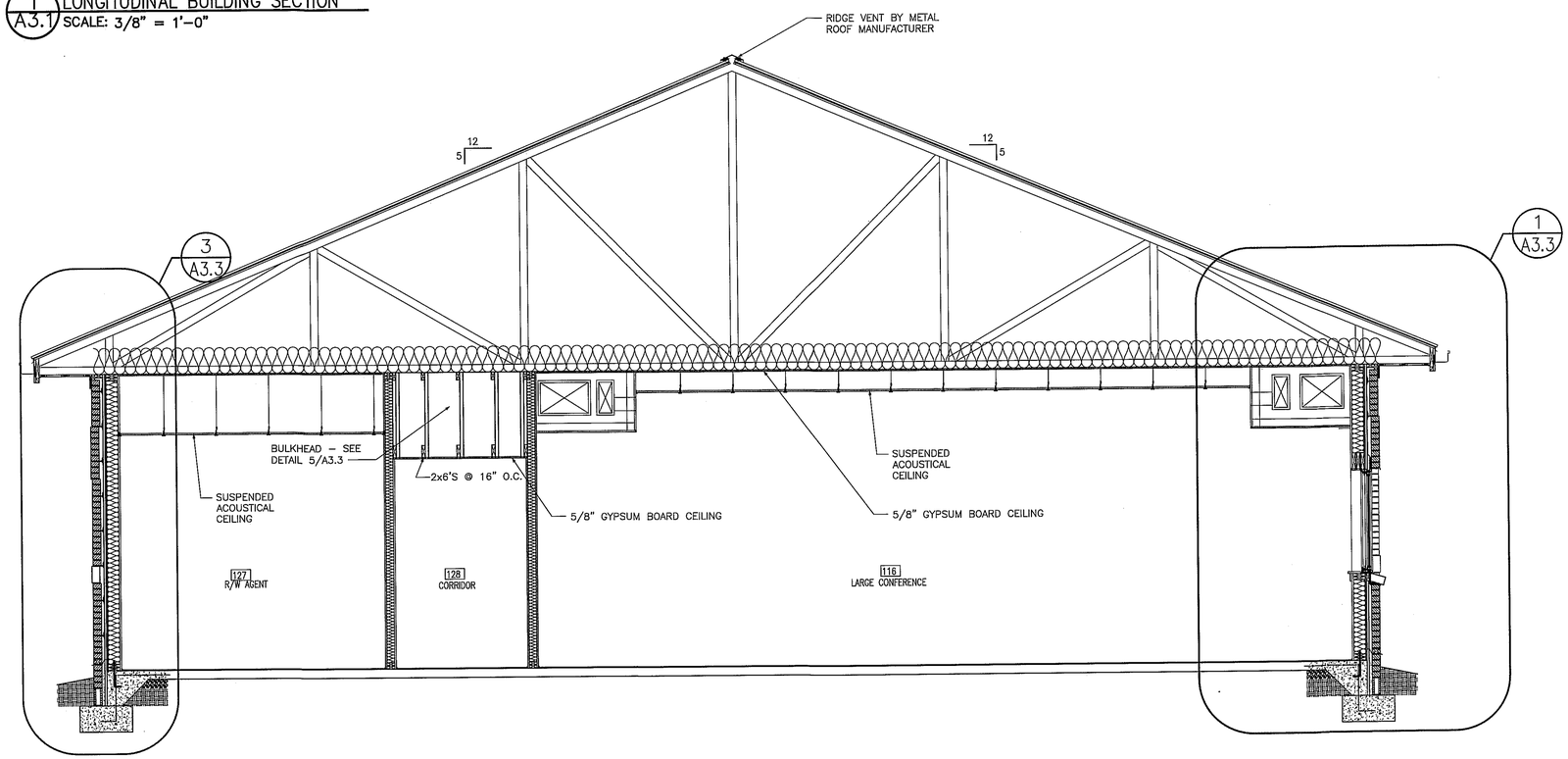

2 A3.1 LATERAL BUILDING SECTION
SCALE: 3/8" = 1'-0"

FACILITIES DESIGN ARCHITECTS & ENGINEERS
FACILITIES MANAGEMENT DIVISION, NCDOT
1 SOUTH WILMINGTON STREET
RALEIGH, NORTH CAROLINA 27601
PHONES 919/707-4540 FAX:919/715-0399

52961

BURNETTE • CHALK ARCHITECTURE & PLANNING, P.A.
105 BANKS STREET MOREHEAD CITY, NC 28557
252.726.5387 252.726.3099 fax 252.726.1250 info@burnettechalk.com

KENNETH W. BURNETTE
REGISTERED ARCHITECT
3092
NORTH CAROLINA
MOREHEAD CITY, N.C.

MARGARET KELLUM CHALK
REGISTERED ARCHITECT
11614
NORTH CAROLINA
MOREHEAD CITY, N.C.

CONSULTANTS:

REVISIONS:

NCDOT DIVISION III MULTI-UNIT BUILDING
CASTLE HAYNE SITE - 5501 BARBADOS BLVD.
CASTLE HAYNE, NORTH CAROLINA 28429
SCO# 15-12499-02A
BUILDING SECTIONS

PROJECT #16005
DRAWN: CHH
CHECKED: MKC
APPROVED: OWNER
DATE: 05 FEB 2018
PHASE: CD

A3.1

these drawings and specifications represent an instrument of service and as such shall remain in ownership with the architect. use or reproduction by any means, in whole or in part, without the architect's consent, is prohibited.

\\Bpserver\data\acadwg\16005 NCDOT Division III Castle Hayne Office Building\Drawings\Construction Documents\05b - Castle Hayne - A3.1 - Building Sections.dwg, Layout1, 2/5/2018 2:22:29 PM, 1:1

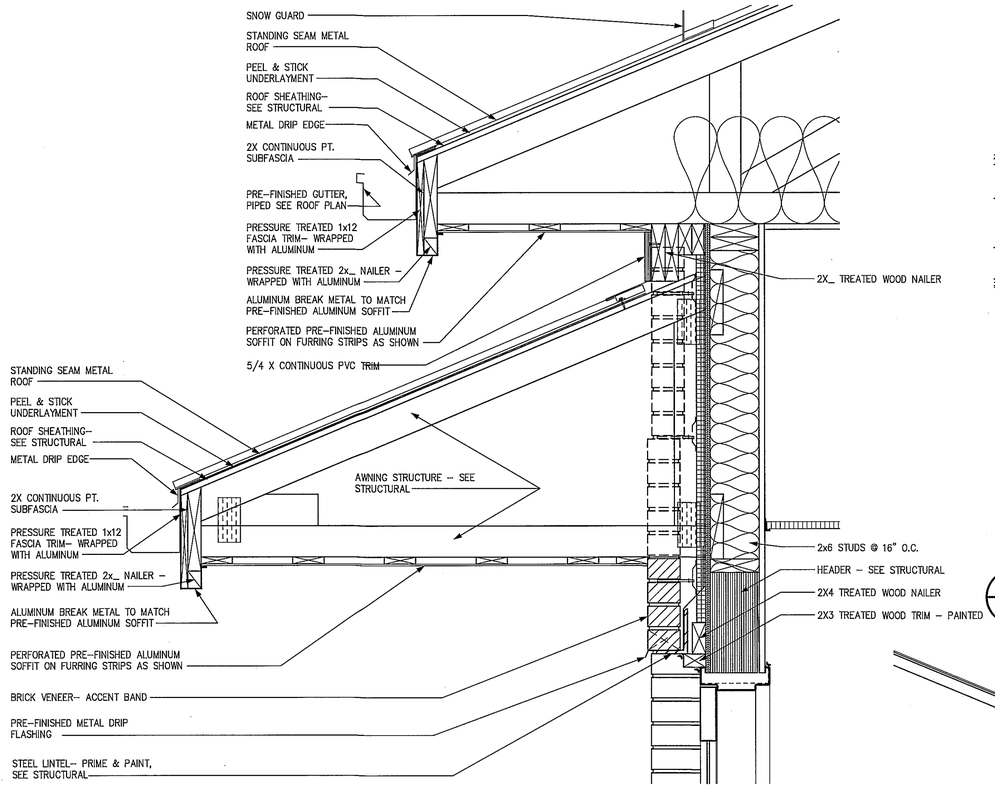

4 A3.2 AWNING DETAIL
SCALE: 1–1/2" = 1'–0"

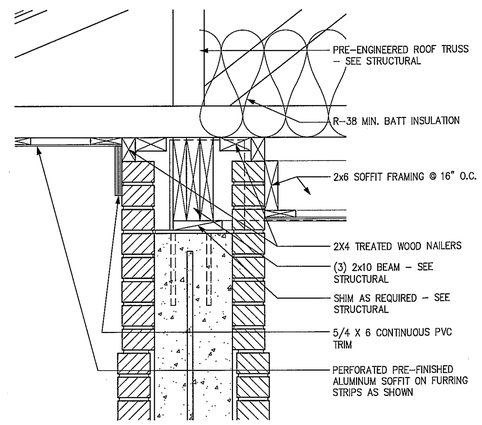

5 A3.2 SOFFIT/BEAM DETAIL
SCALE: 1–1/2" = 1'–0"

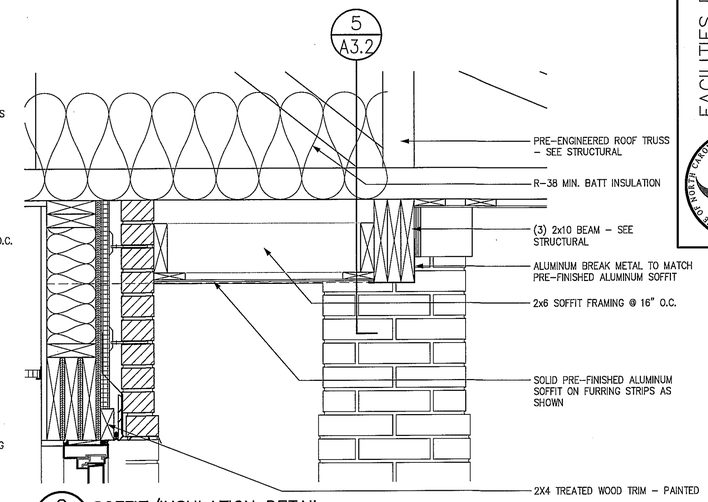

2 A3.2 SOFFIT/INSULATION DETAIL
SCALE: 1–1/2" = 1'–0"

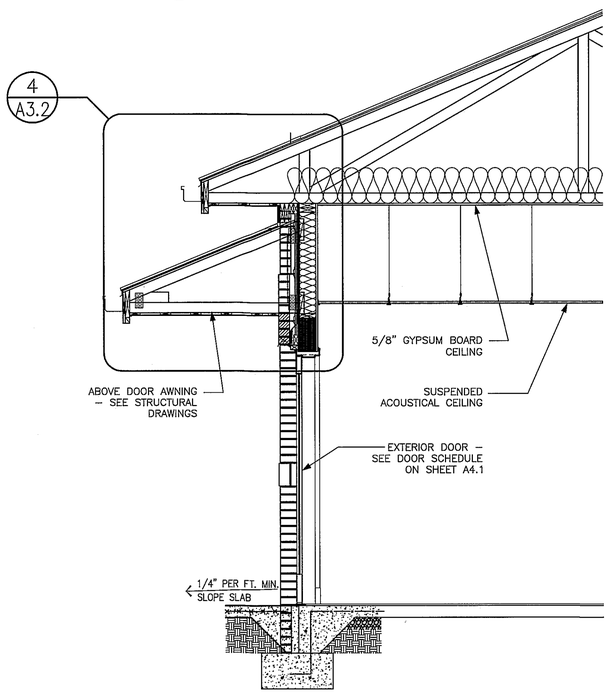

3 A3.2 PASSAGE DOOR/AWNING SECTION
SCALE: 1/2" = 1'–0"

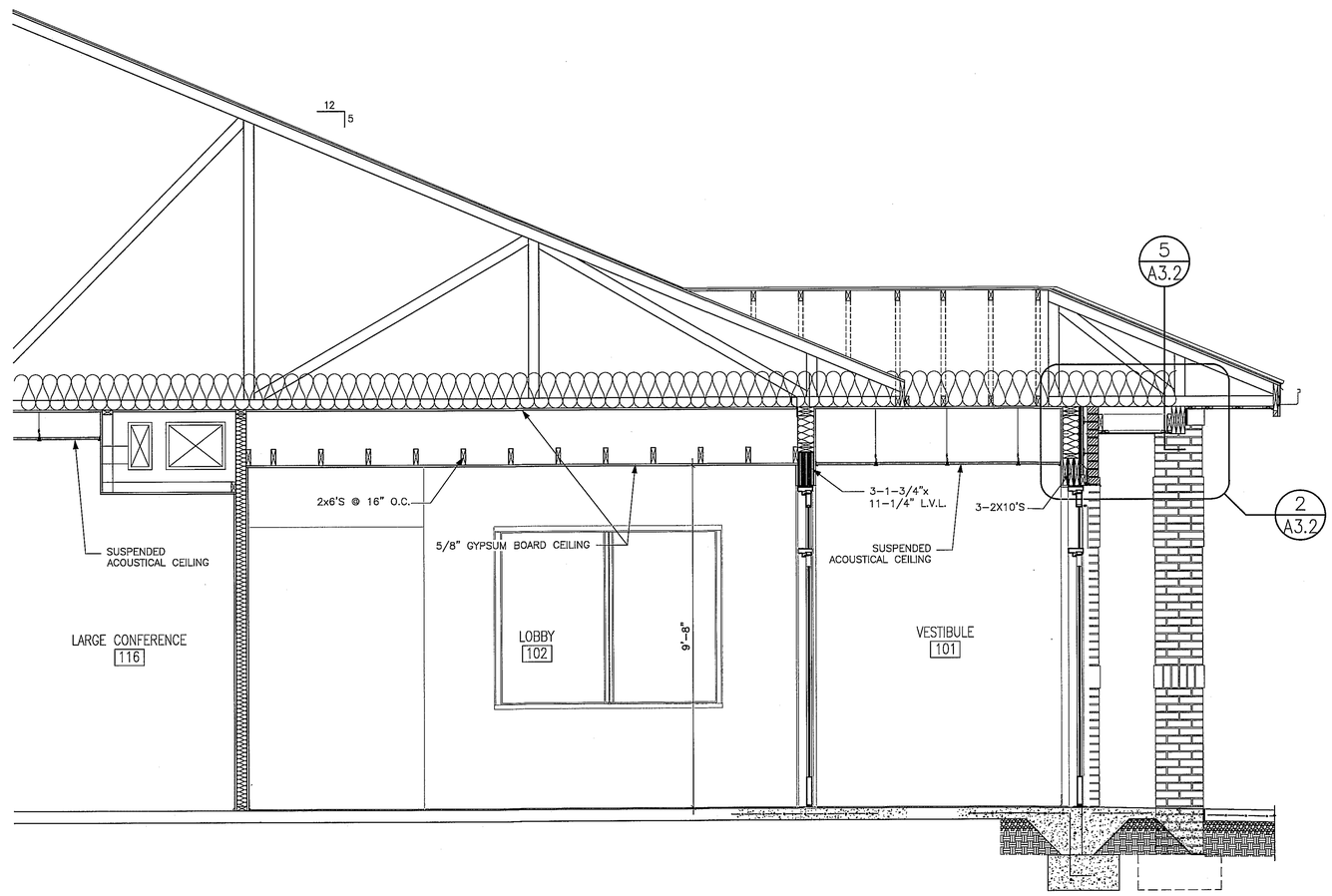

1 A3.2 LOBBY/VESTIBULE SECTION
SCALE: 1/2" = 1'–0"

these drawings and specifications represent an instrument of service and as such shall remain in ownership with the architect. use or reproduction by any means, in whole or in part, without the architect's consent, is prohibited.

FACILITIES DESIGN
ARCHITECTS & ENGINEERS
FACILITIES MANAGEMENT DIVISION, NCDOT
1 SOUTH WILMINGTON STREET
RALEIGH, NORTH CAROLINA 27699
PHONE:919/707-4649 FAX:919/715-0399

BURNETTE • CHALK ARCHITECTURE & PLANNING, P.A.
105 BANKS STREET MOREHEAD CITY, NC 28557
252-726-5387 252-726-3099 fax 252-726-1250 info@burnechalk.com

KENNETH W. BURNETTE REGISTERED ARCHITECT 3092 NORTH CAROLINA MOREHEAD CITY, N.C.

MARGARET KELLIN CHALK REGISTERED ARCHITECT 11614 NORTH CAROLINA MOREHEAD CITY, N.C.

CONSULTANTS:

REVISIONS:

NCDOT DIVISION III MULTI-UNIT BUILDING
CASTLE HAYNE SITE - 5501 BARBADOS BLVD.
CASTLE HAYNE, NORTH CAROLINA 28429
SCO# 15-12499-02A
BUILDING SECTIONS

PROJECT #16005
DRAWN: CHH
CHECKED: MKC
APPROVED: OWNER
DATE: 05 FEB 2018
PHASE: CD

A3.2

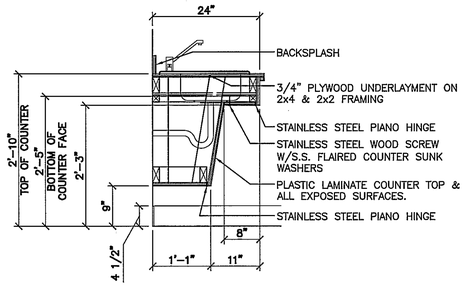

6 A3.3 KITCHEN SINK DETAIL
SCALE: 3/4"=1'-0"

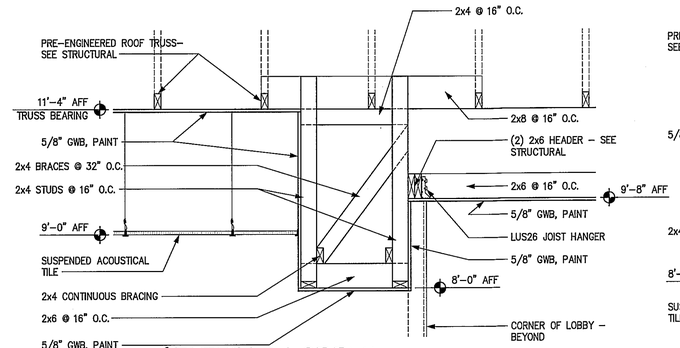

SECTION @ LOBBY/
5 A3.3 CORRIDOR NO. 128 CEILING BULKHEADS
SCALE: 3/4"=1'-0"

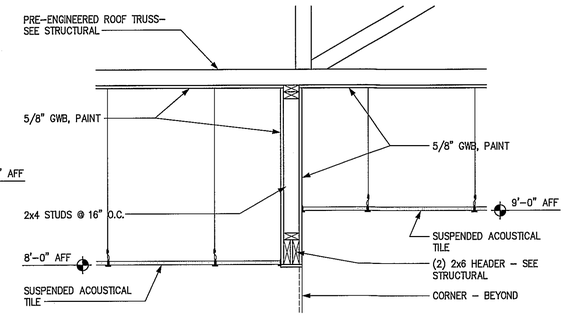

SECTION @ CORRIDORS NO. 129 & 130
4 A3.3 CEILING CHANGE BULKHEADS
SCALE: 3/4"=1'-0"

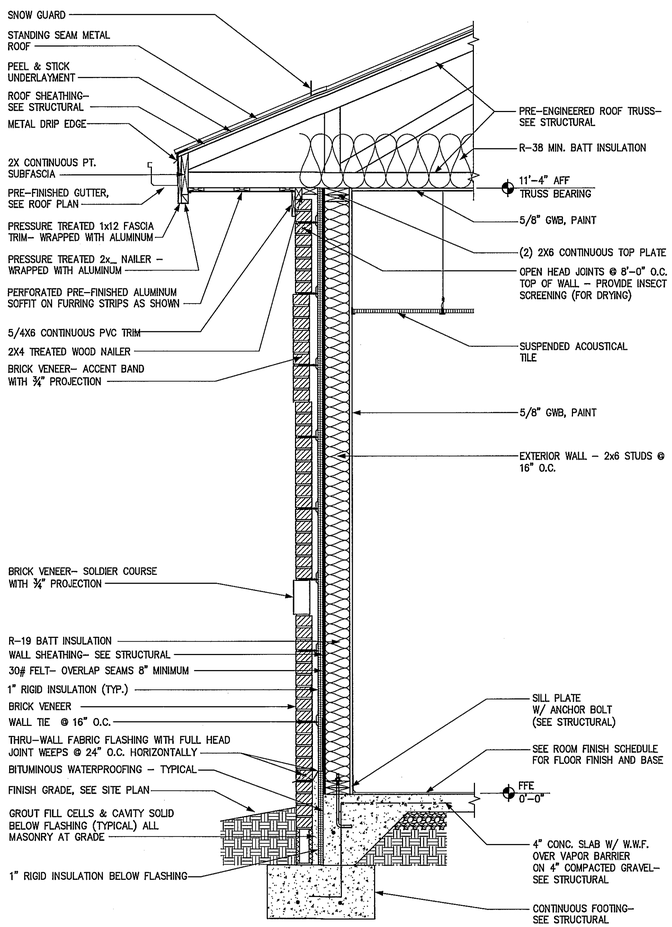

3 A3.3 WALL SECTION
SCALE: 3/4" = 1'-0"

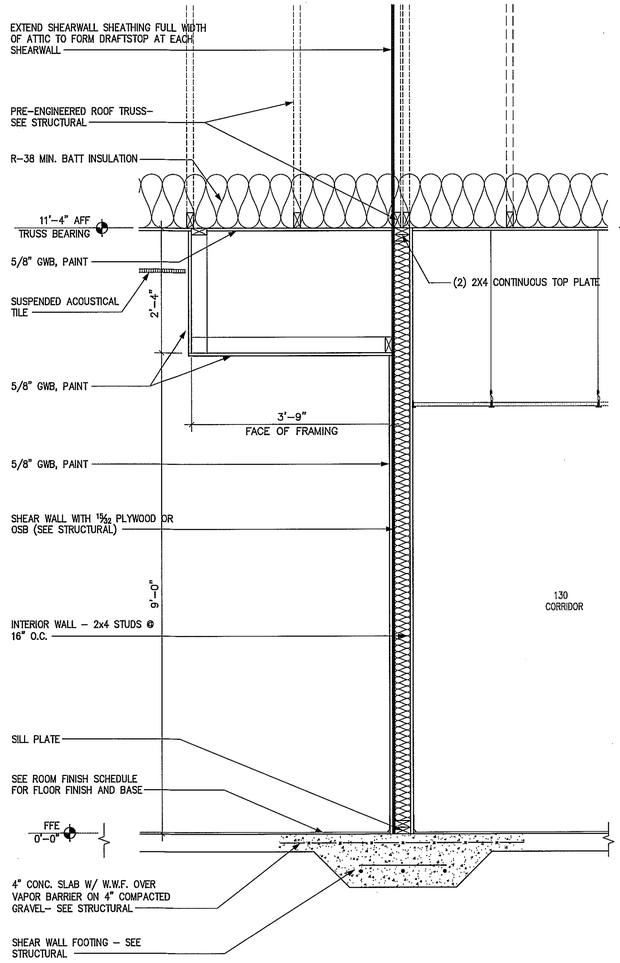

2 A3.3 WALL SECTION
SCALE: 3/4" = 1'-0"

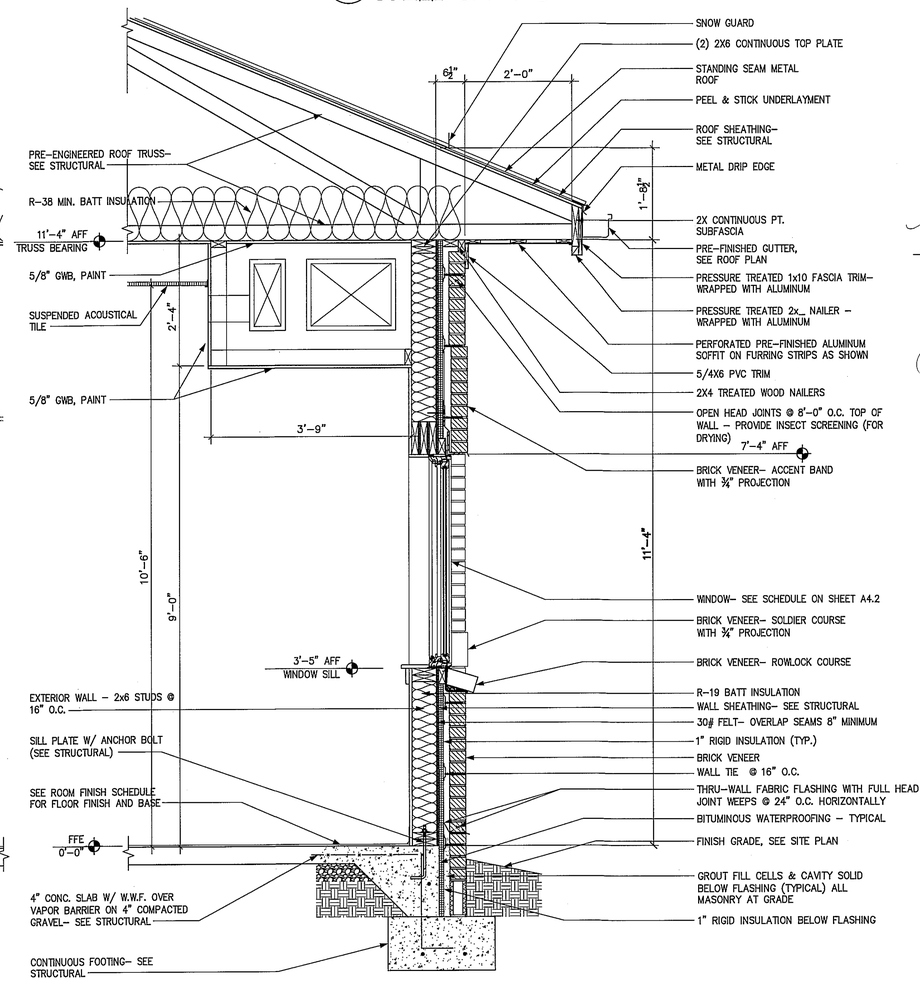

1 A3.3 WALL SECTION
SCALE: 3/4" = 1'-0"

these drawings and specifications represent an instrument of service and as such shall remain in ownership with the architect. use or reproduction by any means, in whole or in part, without the architect's consent, is prohibited.

FACILITIES DESIGN
ARCHITECTS & ENGINEERS
FACILITIES MANAGEMENT DIVISION, NCDOT
1 SOUTH WILMINGTON STREET
RALEIGH, NORTH CAROLINA 27601
PHONE:919/707-6940 FAX:919/715-0399

BURNETTE • CHALK ARCHITECTURE & PLANNING, P.A.
105 BANKS STREET MOREHEAD CITY, NC 28557
252.726.5387 252.726.3099 fax 252.726.1250 info@burnettechalk.com

KENNETH W. BURNETTE
REGISTERED ARCHITECT
3092
MOREHEAD CITY, N.C.

MARGARET KELLUM CHALK
REGISTERED ARCHITECT
11814
MOREHEAD CITY, N.C.

CONSULTANTS:

REVISIONS:
15 SEPTEMBER 2017

NCDOT DIVISION III MULTI-UNIT BUILDING
CASTLE HAYNE SITE - 5501 BARBADOS BLVD.
CASTLE HAYNE, NORTH CAROLINA 28429
SCO# 15-12499-02A
WALL SECTIONS

PROJECT #16005
DRAWN: CHH
CHECKED: MKC
APPROVED: MKC
DATE: 05 FEB 2018
PHASE: CD

A3.3

NOTES:
1. SPECIFIED DIMENSIONS ARE FOR DOOR ROUGH OPENING.
2. SEE THIS SHEET FOR TYP. DOOR FRAMING DETAILS.
3. ALL GLAZING IN OR ADJACENT TO SWINGING DOORS SHALL BE IMPACT RESISTANT IN ACCORDANCE WITH NCBC SECTION 2406.

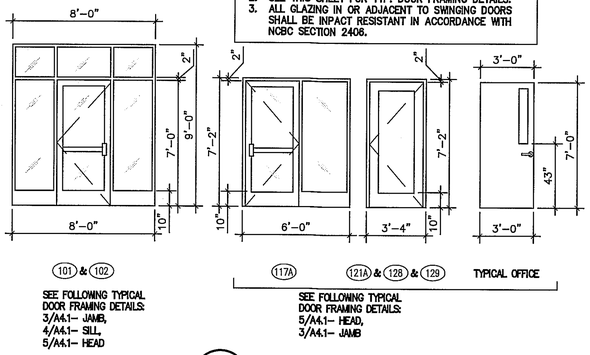

1 A4.1 DOOR ELEVATIONS
SCALE: 1/4" = 1'-0"

NOTES:
1. SPECIFIED DIMENSIONS ARE FOR WINDOW FRAME.
2. SEE THIS SHEET FOR TYP. WINDOW FRAMING DETAILS.

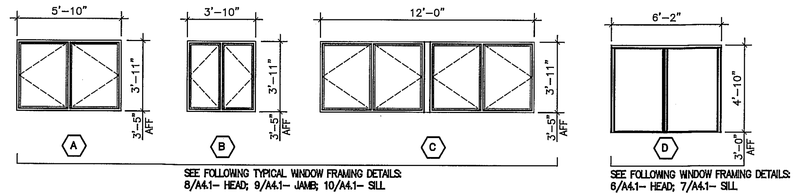

2 A4.1 WINDOW ELEVATIONS
SCALE: 1/4" = 1'-0"

DOOR GLAZING NOTES:

1. ALL OFFICE DOORS TO HAVE SAFETY GLASS VIEW PANEL. ALL INTERIOR GLAZING IN DOORS AND/OR SIDELIGHTS SHALL BE SAFETY (TEMPERED) GLASS.
2. ALL EXTERIOR DOOR GLAZING AND SIDELIGHTS SHALL BE INSULATED SAFETY GLASS, TEMPERED ON BOTH SIDES.

DOOR–HARDWARE SCHEDULE

DOOR				FRAME		HARDWARE SET #	REMARKS
DOOR NO.	SIZE	MAT.	FINISH	MAT.	FINISH		
101	3'–0"x7'–0"x1 3/4"	ALUM./ GLASS	DARK BRONZE	ALUM.	CLEAR ANOD.	#1	
102	3'–0"x7'–0"x1 3/4"	ALUM./ GLASS	DARK BRONZE	ALUM.	CLEAR ANOD.	#1	
103	NOT USED						
104	3'–0"x7'–0"x1 3/4"	WOOD	STAIN	WOOD	N/A	#5	
105	3'–0"x7'–0"x1 3/4"	WOOD	STAIN	WOOD	N/A	#5	
106	3'–0"x7'–0"x1 3/4"	WOOD	STAIN	WOOD	N/A	#5	
107	3'–0"x7'–0"x1 3/4"	WOOD	STAIN	WOOD	N/A	#5	
108	3'–0"x7'–0"x1 3/4"	WOOD	STAIN	WOOD	N/A	#5	
109	3'–0"x7'–0"x1 3/4"	WOOD	STAIN	WOOD	N/A	#5	
110A	3'–0"x7'–0"x1 3/4"	WOOD	STAIN	WOOD	N/A	#3	ROLLING BARN DOOR
110B	3'–0"x7'–0"x1 3/4"	WOOD	STAIN	WOOD	N/A	#3	ROLLING BARN DOOR
111	3'–0"x7'–0"x1 3/4"	WOOD	STAIN	WOOD	N/A	#5	
112	NOT USED						
113	3'–0"x7'–0"x1 3/4"	WOOD	STAIN	WOOD	N/A	#5	
114	3'–0"x7'–0"x1 3/4"	WOOD	STAIN	WOOD	N/A	#5	
115	3'–0"x7'–0"x1 3/4"	WOOD	STAIN	WOOD	N/A	#5	
116A	3'–0"x7'–0"x1 3/4"	WOOD	STAIN	WOOD.	N/A	#5	
116B	3'–0"x7'–0"x1 3/4"	WOOD	STAIN	WOOD	N/A	#5	
117A	3'–0"x7'–0"x1 3/4"	ALUM./ GLASS	DARK BRONZE	ALUM.	CLEAR ANOD.	#1	
117B	3'–0"x7'–0"x1 3/4"	WOOD	STAIN	WOOD	N/A	#4	
118	3'–0"x7'–0"x1 3/4"	WOOD	STAIN	WOOD	N/A	#4	MARBLE THRESHOLD
119	3'–0"x7'–0"x1 3/4"	WOOD	STAIN	WOOD	N/A	#4	MARBLE THRESHOLD
120	3'–0"x7'–0"x1 3/4"	WOOD	STAIN	WOOD	N/A	#3	ROLLING BARN DOOR
121A	3'–0"x7'–0"x1 3/4"	HM	PAINT	H.M.	PAINT	#2	
121B	3'–0"x7'–0"x1 3/4"	WOOD	STAIN	WOOD	N/A	#4	
122	3'–0"x7'–0"x1 3/4"	WOOD	STAIN	WOOD	N/A	#5	
123	3'–0"x7'–0"x1 3/4"	WOOD	STAIN	WOOD	N/A	#5	
124	3'–0"x7'–0"x1 3/4"	WOOD	STAIN	WOOD	N/A	#5	
125	3'–0"x7'–0"x1 3/4"	WOOD	STAIN	WOOD	N/A	#5	
126	3'–0"x7'–0"x1 3/4"	WOOD	STAIN	WOOD	N/A	#5	
127	3'–0"x7'–0"x1 3/4"	WOOD	STAIN	WOOD	N/A	#5	
128	3'–0"x7'–0"x1 3/4"	HM	PAINT	H.M.	PAINT	#2	
129	3'–0"x7'–0"x1 3/4"	HM	PAINT	H.M.	PAINT	#2	
132	3'–0"x7'–0"x1 3/4"	WOOD	STAIN	WOOD	N/A	#5	

WINDOW SCHEDULE

EXTERIOR WINDOWS (PELLA – PROLINE ALUMINUM CLAD)

MARK	SIZE (R.O.)	SIZE (UNIT)	UNIT	REMARKS
Ⓐ	5'–10 3/4" X 3'–11 3/4"	(2) 2'–8" X 3'–11"	PAIR 3547	
Ⓑ	3'–10 3/4" X 3'–11 3/4"	(2) 1'–11" X 3'–11"	PAIR 2347	
Ⓒ	12'–0 3/4" X 3'–11 3/4"	(4) 2'–8" X 3'–11" + 4" CENTER MULLION	PAIR 3547/"J" MULION/PAIR 3547	

STOREFRONT

MARK	SIZE (R.O.)	FRAME				GLAZING	REMARKS
		TYPE	MATERIAL	FINISH	SCREEN		
Ⓓ	6'–2" X 4'–10"	SLIDING	ALUMINUM	DARK BRONZE	N/A	SEE SPECS	INTERIOR SERVICE WINDOW – SINGLE OPERATING PANE (SEE 13/A4.2)

NOTE: PROVIDE END DAMS AT ALL HEAD & SILL FLASHING AND AT ALL CONDITIONS WHERE THE FLASHING SURFACE TERMINATES WITHIN THE WALL.

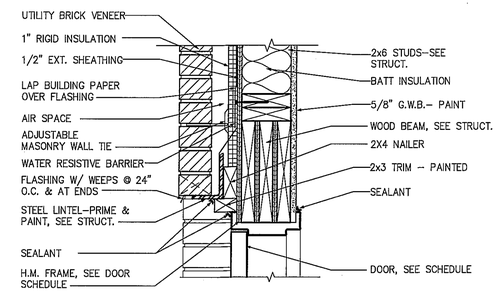

3 A4.1 H.M. DOOR– HEAD
SCALE: 1–1/2" = 1'–0"

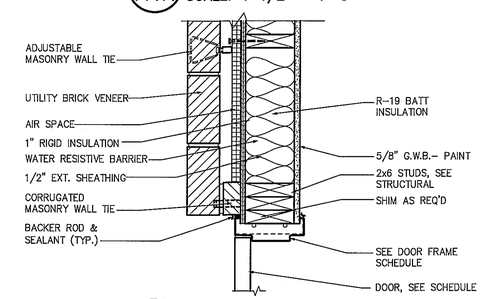

4 A4.1 H.M. DOOR– JAMB
SCALE: 1–1/2" = 1'–0"

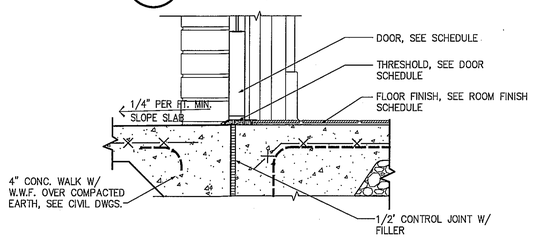

5 A4.1 H.M. DOOR– SILL
SCALE: 1–1/2" = 1'–0"

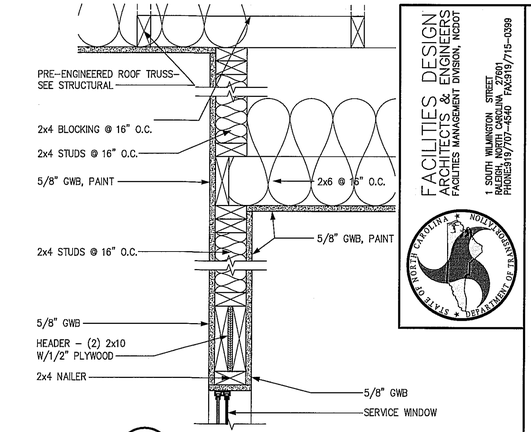

6 A4.1 PASS–THRU HEAD
SCALE: 1–1/2" = 1'–0"

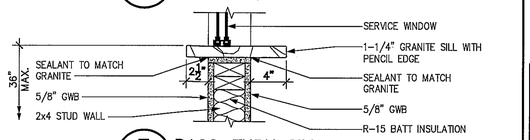

7 A4.1 PASS–THRU SILL
SCALE: 1–1/2" = 1'–0"

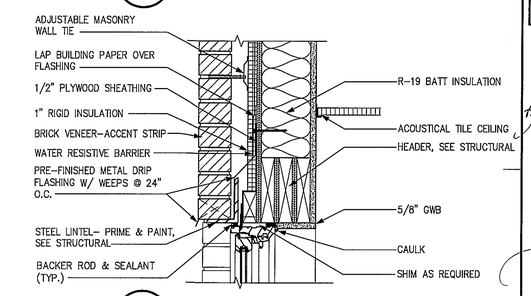

8 A4.1 WINDOW HEAD
SCALE: 1–1/2" = 1'–0"

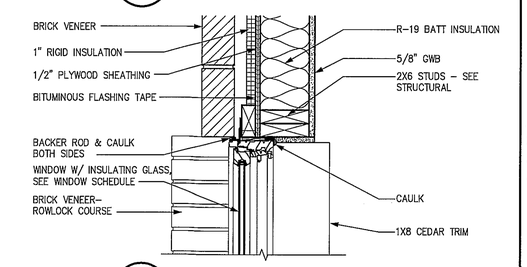

9 A4.1 WINDOW JAMB
SCALE: 1–1/2" = 1'–0"

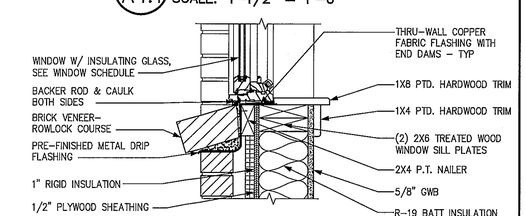

10 A4.1 WINDOW SILL
SCALE: 1–1/2" = 1'–0"

these drawings and specifications represent an instrument of service and as such shall remain in ownership with the architect. use or reproduction by any means, in whole or in part, without the architect's consent, is prohibited.

FACILITIES DESIGN ARCHITECTS & ENGINEERS
FACILITIES MANAGEMENT DIVISION, NCDOT
1 SOUTH WILMINGTON STREET
RALEIGH, NORTH CAROLINA 27601
PHONE:919/707-4540 FAX:919/715-0399
STATE OF NORTH CAROLINA DEPARTMENT OF TRANSPORTATION
REGISTERED ARCHITECTURAL CORPORATION 52961
NORTH CAROLINA

BURNETTE • CHALK ARCHITECTURE & PLANNING, P.A.
105 BANKS STREET MOREHEAD CITY, NC 28557
252.726.5387 252.726.0029 fax 252.726.1930 info@burnettechalk.com

KENNETH W. BURNETTE REGISTERED ARCHITECT 3092 NORTH CAROLINA MOREHEAD CITY, NC

MARGARET KELLUM CHALK REGISTERED ARCHITECT 11614 NORTH CAROLINA MOREHEAD CITY, NC

CONSULTANTS:

REVISIONS:
15 SEPTEMBER 2017

NCDOT DIVISION III MULTI-UNIT BUILDING
CASTLE HAYNE SITE - 5501 BARBADOS BLVD.
CASTLE HAYNE, NORTH CAROLINA 28429
SCO# 15-12499-02A
DOOR & WINDOW SCHEDULES

PROJECT #16005
DRAWN: CHH
CHECKED: MKC
APPROVED: MKC
DATE: 05 FEB 2018
PHASE: CD

A4.1

\\Bpservertdata\bacadvg\16005 NCDOT Division III Castle Hayne Office Building\Drawings\Construction Documents\021 - Castle Hayne - A4.1 - Door and Window Schedules.dwg, Layout1, 3/6/2018 2:27:19 PM, 1:1

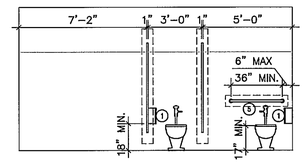

1 A4.2 ELEVATION: RM. 118
SCALE: 1/4" = 1'-0"

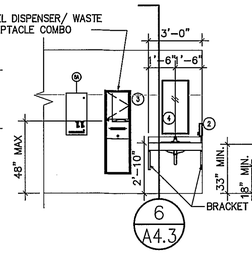

2 A4.2 ELEVATION: RM. 118
SCALE: 1/4" = 1'-0"

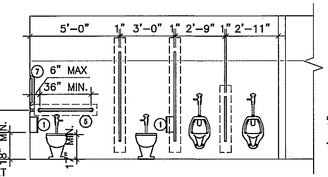

3 A4.2 ELEVATION: RM. 119
SCALE: 1/4" = 1'-0"

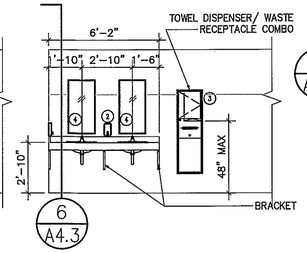

4 A4.2 ELEVATION: RM. 119
SCALE: 1/4" = 1'-0"

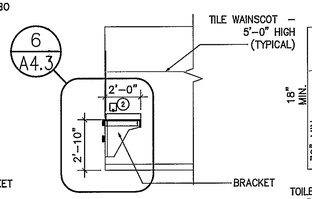

5 A4.2 ELEVATION: RM. 118 (ROOM 119– O.H.)
SCALE: 1/4" = 1'-0"

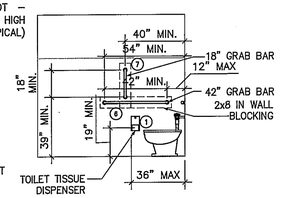

6 A4.2 ELEVATION: ADA STALL (TYP.)
SCALE: 1/4" = 1'-0"

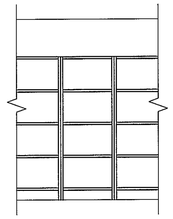

7 A4.2 ELEV: RM. 111–NORTH
SCALE: 1/4" = 1'-0"

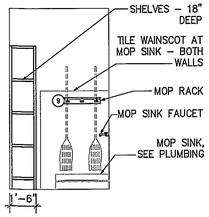

8 A4.2 ELEV: RM. 132–EAST
SCALE: 1/4" = 1'-0"

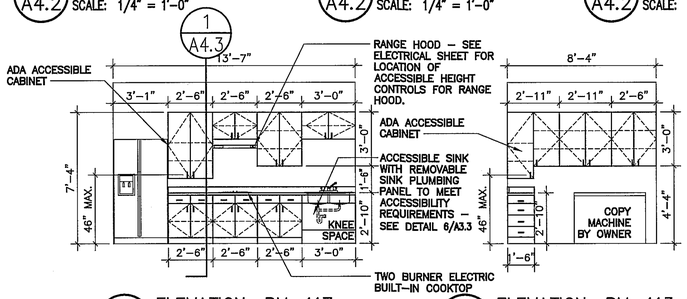

9 A4.2 ELEVATION: RM. 117
SCALE: 1/4" = 1'-0"

10 A4.2 ELEVATION: RM. 113–EAST
SCALE: 1/4" = 1'-0"

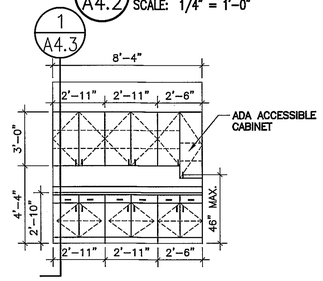

11 A4.2 ELEVATION: RM. 113–WEST
SCALE: 1/4" = 1'-0"

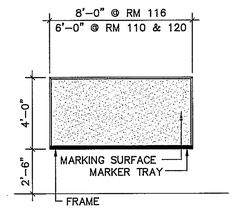

12 A4.2 MARKER BOARD ELEVATION
SCALE: 1/4" = 1'-0"

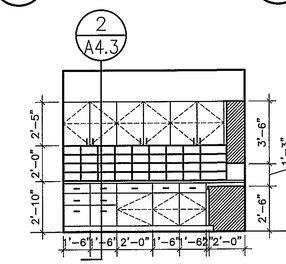

13 A4.2 ELEV: RM. 103–WEST
SCALE: 1/4" = 1'-0"

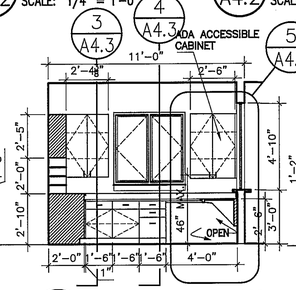

14 A4.2 ELEV: RM. 103–NORTH
SCALE: 1/4" = 1'-0"

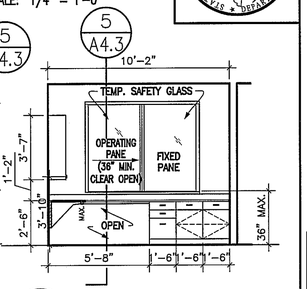

15 A4.2 ELEV: RM. 103–EAST
SCALE: 1/4" = 1'-0"

ROOM FINISH SCHEDULE: * SEE NOTES

ROOM NO.	ROOM NAME	FLOOR MATL	FLOOR BASE	WALLS NORTH WALL	WALLS SOUTH WALL	WALLS EAST WALL	WALLS WEST WALL	CEILING MATL	CEILING HEIGHT	REMARKS
101	VESTIBULE	SCE	RB	PGWB	PGWB	PGWB	PGWB	PGWB	10'-0"	
102	LOBBY	SCE	RB	PGWB	PGWB	PGWB	PGWB	PGWB	10'-0"	
103	CLERICAL	CPT	RB	PGWB	PGWB	PGWB	PGWB	SAC	9'-0"	
104	ASST. ENGINEER	CPT	RB	PGWB	PGWB	PGWB	PGWB	SAC	9'-0"	
105	ASST. ENGINEER	CPT	RB	PGWB	PGWB	PGWB	PGWB	SAC	9'-0"	
106	DIV. RESIDENT ENGINEER	CPT	RB	PGWB	PGWB	PGWB	PGWB	SAC	9'-0"	
107	ASSIST. ENGINEER	CPT	RB	PGWB	PGWB	PGWB	PGWB	SAC	9'-0"	
108	ASSIST. ENGINEER	CPT	RB	PGWB	PGWB	PGWB	PGWB	SAC	9'-0"	
109	ASSIST. ENGINEER	CPT	RB	PGWB	PGWB	PGWB	PGWB	SAC	9'-0"	
110	CONSTRUCTION WORK ROOM	SCE	RB	PGWB	PGWB	PGWB	PGWB	SAC	9'-0"	INSTALL BLOCKING FOR MARKER BOARD
111	STORAGE	SCE	RB	PGWB	PGWB	PGWB	PGWB	SAC	8'-0"	
112	FILES	SCE	RB	PGWB	PGWB	PGWB	PGWB	SAC	8'-0"	
113	COPIER	SCE	RB	PGWB	PGWB	PGWB	PGWB	SAC	8'-0"	
114	MECH. RM.	SC	RB	PGWB	PGWB	PGWB	PGWB	PGWB	11'-4"	PGWB TIGHT TO UNDERSIDE OF TRUSS
115	IT	SC	RB	PGWB	PGWB	PGWB	PGWB	SAC	8'-0"	PROVIDE TRANSITION BTWN SC & SCE EDGE @ DR.
116	LARGE CONFERENCE	CPT	RB	PGWB	PGWB	PGWB	PGWB	SAC	10'-6"	INSTALL BLOCKING FOR MARKER BOARD
117	BREAK RM.	SCE	RB	PGWB	PGWB	PGWB	PGWB	SAC	9'-0"	
118	WOMEN	CT	CT	PGWB/CT	PGWB/CT	PGWB/CT	PGWB/CT	PGWB	8'-0"	CT TO 5'-0" AFF & MARBLE THRESHOLD
119	MEN	CT	CT	PWGB/CT	PGWB/CT	PGWB/CT	PGWB/CT	PGWB	8'-0"	CT TO 5'-0" AFF & MARBLE THRESHOLD
120	R/W WORK ROOM	CPT	RB	PGWB	PGWB	PGWB	PGWB	SAC	9'-0"	INSTALL BLOCKING FOR MARKER BOARD
121	VESTIBULE	SCE	RB	PGWB	PGWB	PGWB	PGWB	SAC	9'-0"	
122	R/W AGENT	CPT	RB	PGWB	PGWB	PGWB	PGWB	SAC	9'-0"	
123	R/W AGENT	CPT	RB	PGWB	PGWB	PGWB	PGWB	SAC	9'-0"	
124	R/W AGENT	CPT	RB	PGWB	PGWB	PGWB	PGWB	SAC	9'-0"	
125	R/W AGENT	CPT	RB	PGWB	PGWB	PGWB	PGWB	SAC	9'-0"	
126	R/W AGENT	CPT	RB	PGWB	PGWB	PGWB	PGWB	SAC	9'-0"	
127	R/W AGENT	CPT	RB	PGWB	PGWB	PGWB	PGWB	SAC	9'-0"	
128	CORRIDOR	SCE	RB	PGWB	PGWB	PGWB	PGWB	SAC	8'-6"	
129	CORRIDOR	SCE	RB	PGWB	PGWB	PGWB	PGWB	PGWB	8'-6"	
130	CORRIDOR	SCE	RB	PGWB	PGWB	PGWB	PGWB	PGWB	8'-0"	
131	CORRIDOR	SCE	RB	PGWB	PGWB	PGWB	PGWB	SAC	8'-6"	
132	JANITOR	SC	RB	PGWB/CT	PGWB	PGWB	PGWB/CT	PGWB	8'-0"	4'-0" WIDE X 5'-0" HIGH CT AT JAN. SINK PROVIDE TRANSITION BTWN SC & SCE EDGE @ DR.

1. ALL COLORS TO BE SIMILAR TO THE DIVISION OFFICE.
2. ALL CARPET TO BE SIMILAR TO THE DIVISION OFFICE.
3. ALL WALL PAINT TO BE SEMI-GLOSS, NEUTRAL COLOR.
4. COORDINATE EPOXY FLOOR COLORS TO BE SIMILAR TO CARPET AND WALL COLORS.
5. PROVIDE TRANSITION THRESHOLD @ EDGE BETWEEN SC & SCE UNDER DOORS. SUBMIT SAMPLE FOR APPROVAL.

FINISH LEGEND:

FLOOR FINISH	BASE FINISH	WALL FINISH	CEILING FINISH
CT CERAMIC TILE	CT CERAMIC TILE	CT CERAMIC TILE	SAC SUSPENDED ACOUSTICAL CEILING
SC SEALED CONCRETE	RB RUBBER BASE	PGWB PAINTED GYPSUM WALL BOARD	PGWB PAINTED GYPSUM WALL BOARD
VCT VINYL COMP. TILE		PCMU PAINTED CMU	
CPT CARPET			
SCE CHEMICAL RESISTANT EPOXY COATED CONC.			

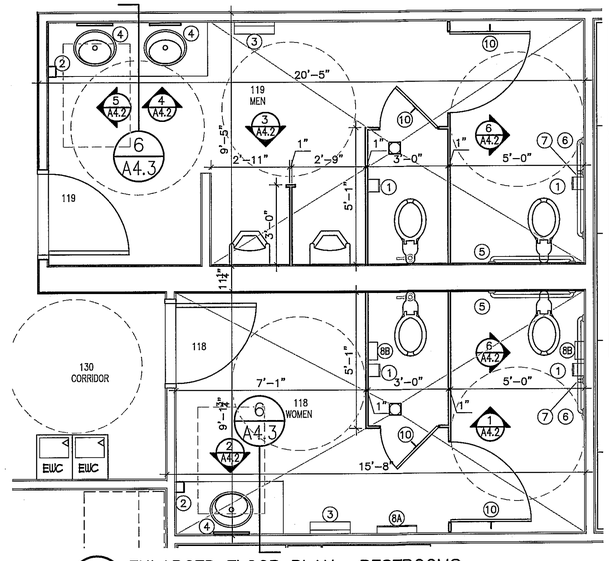

16 A4.2 ENLARGED FLOOR PLAN– RESTROOMS
SCALE: 3/8" = 1'-0"

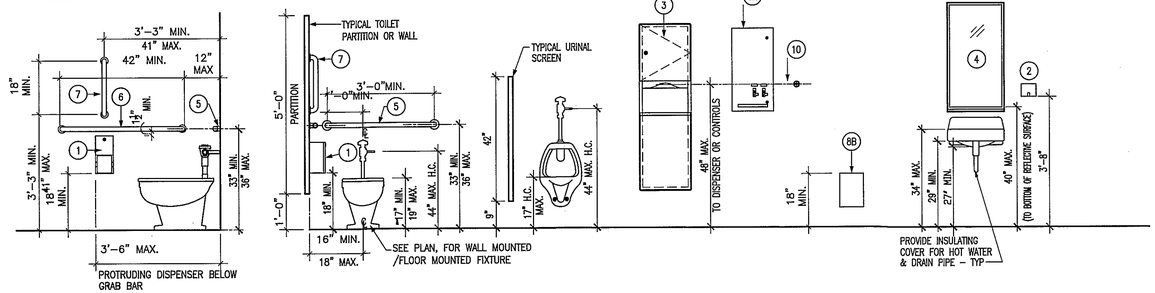

17 A4.2 TYPICAL TOILET ACCESSORIES MOUNTING ELEVATIONS
SCALE: 1/2" = 1'-0"

TOILET ACCESSORY SCHEDULE

NO.	DESCRIPTION	MANUFACTURER	SIZE/MODEL NUMBER	REMARKS
1	TOILET TISSUE DISPENSER	BOBRICK	B-2888	SURFACE MOUNTED – 2 ROLLS
2	SOAP DISPENSER	BOBRICK	B-4112	
3	PAPER TOWEL DISPENSER/ WASTE RECEPTACLE COMBO– SEMI-RECESSED	BOBRICK	B-367	RECESSED
4	18" x 36" MIRROR	BOBRICK	B-165	
5	36" GRAB BAR	BOBRICK	B–	
6	42" GRAB BAR	BOBRICK	B–	
7	18" VERTICAL GRAB BAR	BOBRICK	B–	
8A	SANITARY NAPKIN/TAMPON DISPENSER – WALL MOUNTED	BOBRICK	B-2706	SEMI-RECCESSED
8B	SANITARY NAPKIN/TAMPON DISPOSAL – PARTITION MOUNTED	BOBRICK	B-270	SURFACE MOUNTED
9	24" MOP RACK	BOBRICK	B-223X24	3 HOLDERS
10	COAT HOOK	BOBRICK	B-671	SINGLE HOOK

NOTES:
1. SEE SPECIFICATIONS IN PROJECT MANUAL.
2. MANUAL CONTROL VALVE TO BE LOCATED ON OPEN SIDE OF TOILET IN ACCESSIBLE COMPARTMENT. REFER TO SECTION 604.6 ICCA117.1–2009.
3. ROOM SIGNAGE LOCATION & CLEARANCES SHALL COMPLY WITH SECTION 703.3.11 ICCA117.1–2009.

FACILITIES DESIGN
ARCHITECTS & ENGINEERS
FACILITIES MANAGEMENT DIVISION, NCDOT
1 SOUTH WILMINGTON STREET
RALEIGH, NORTH CAROLINA 27601
PHONES 919/707-4540 FAX:4919/715-0398
STATE OF NORTH CAROLINA DEPARTMENT OF TRANSPORTATION

BURNETTE • CHALK ARCHITECTURE & PLANNING, P.A.
105 BANKS STREET MOREHEAD CITY, NC 28557
252-726-5387 252-726-3099 fax 252-726-1250 info@burnettechalk.com

CONSULTANTS:

REVISIONS:
15 SEPTEMBER 2017

NCDOT DIVISION III MULTI-UNIT BUILDING
CASTLE HAYNE SITE - 5501 BARBADOS BLVD.
CASTLE HAYNE, NORTH CAROLINA 28429
SCO# 15-12499-02A
ROOM FINISH SCHEDULE

PROJECT #16005
DRAWN: CHH
CHECKED: MKC
APPROVED: MKC
DATE: 05 FEB 2018
PHASE: CD

A4.2

these drawings and specifications represent an instrument of service and as such shall remain in ownership with the architect. use or reproduction by any means, in whole or in part, without the architect's consent, is prohibited.

\\Bsparver\data\projects\16005 NCDOT Division III Castle Hayne Office Building\Drawings\Construction Documents\012 - Castle Hayne - A4.2 - Room Finish Schedule.dwg, Layout1, 2/5/2018 2:54:53 PM, 1:1

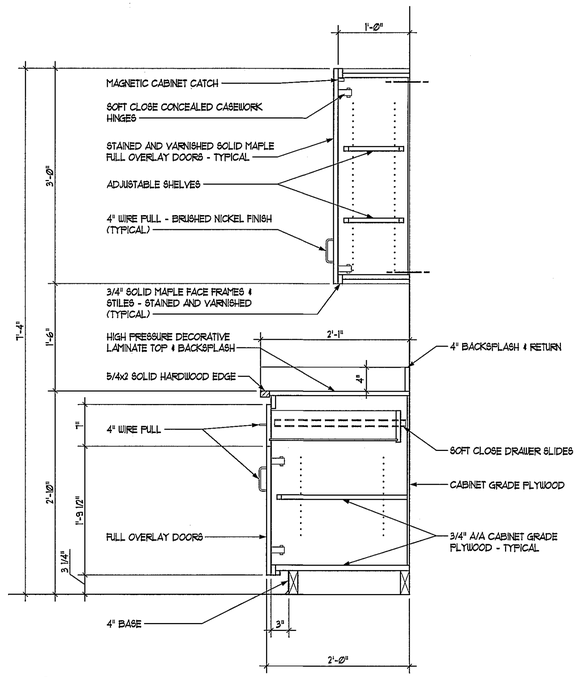

SECTION @ BREAK
1 ROOM BASE & WALL CABINET
A4.3 SCALE: 1"=1'-0"

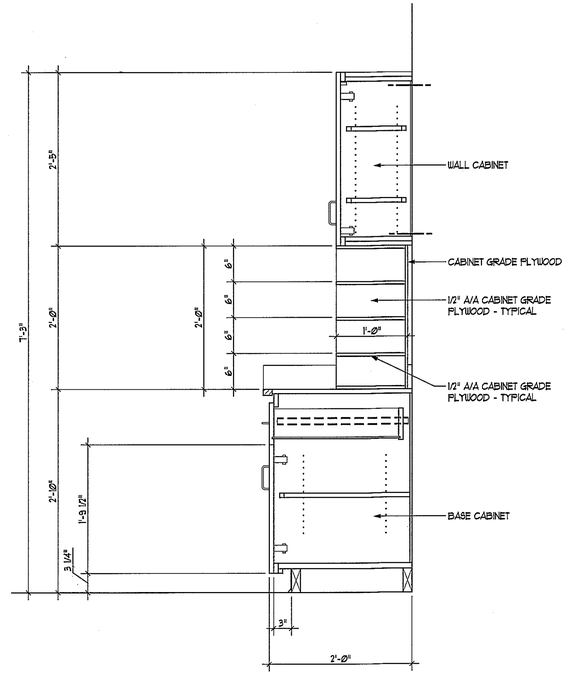

2 SECTION @ MAIL SLOTS
A4.3 SCALE: 1"=1'-0"

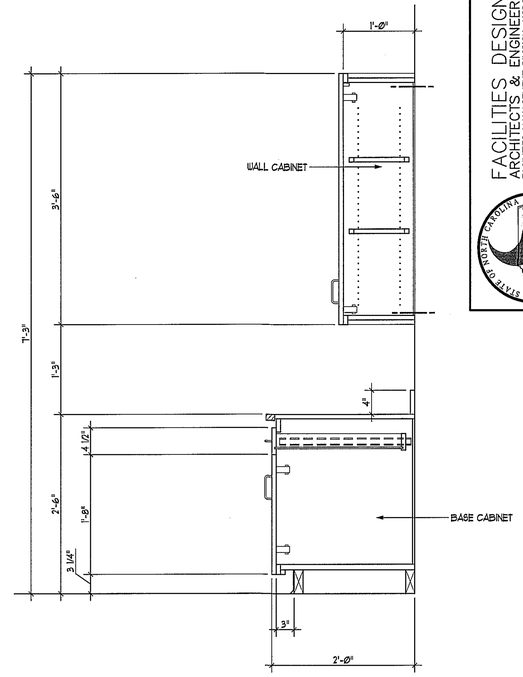

3 SECTION @ DESK BASE & WALL CABINET
A4.3 SCALE: 1"=1'-0"

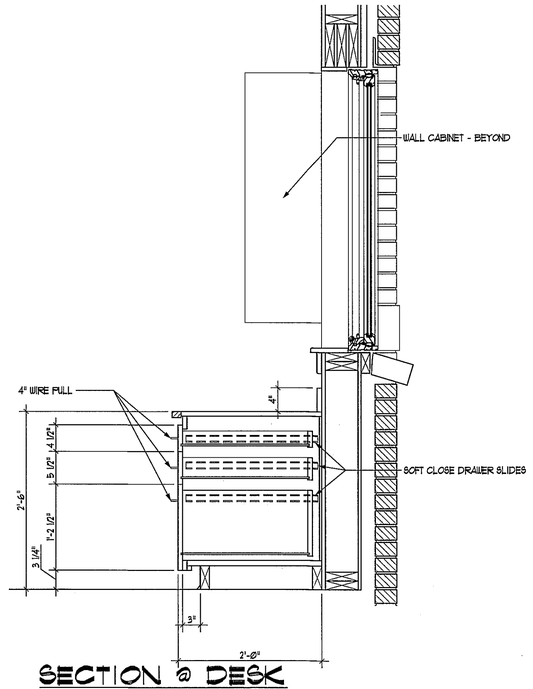

SECTION @ DESK
4 DRAWER BASE CABINET
A4.3 SCALE: 1"=1'-0"

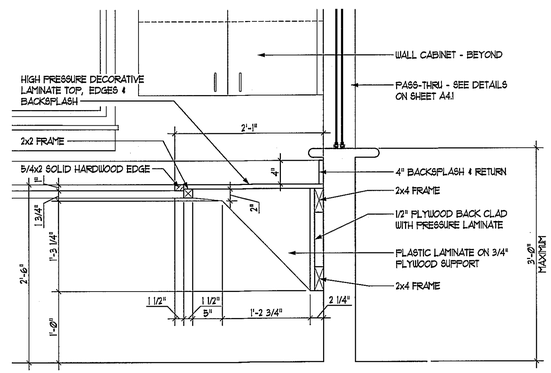

5 SECTION @ DESK TOP
A4.3 SCALE: 1"=1'-0"

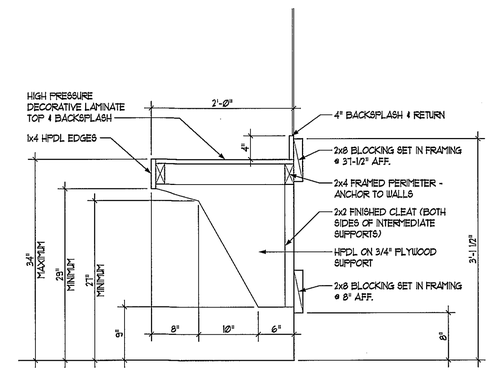

6 SECTION @ RESTROOM COUNTER
A4.3 SCALE: 1"=1'-0"

MILLWORK NOTES*:
*REFER TO SPECIFICATIONS FOR COMPLETE INFORMATION.

- WOOD SPECIES: STAIN GRADE SOLID MAPLE.
- QUALITY STANDARD: AWDA/AWI PREMIUM QUALITY.
- FINISH: STAIN AND VARNISH.
- HARDWARE:
  - PREMIUM GRADE FINISHES.
  - SOFT CLOSE HINGES AND DRAWER SLIDES.
  - CONCEALED, ADJUSTABLE HINGES.

FACILITIES DESIGN
ARCHITECTS & ENGINEERS
FACILITIES MANAGEMENT DIVISION, NCDOT
1 SOUTH WILMINGTON STREET
RALEIGH, NORTH CAROLINA 27601
PHONE919/707-4540 FAX919/715-0399

BURNETTE • CHALK ARCHITECTURE & PLANNING, P.A.
105 BANKS STREET MOREHEAD CITY, NC 28557
252.726.5387 252.726.3099 fax 252.726.1250 info@bcarchpll.com

CONSULTANTS:

REVISIONS:

NCDOT DIVISION III MULTI-UNIT BUILDING
CASTLE HAYNE SITE - 5501 BARBADOS BLVD.
CASTLE HAYNE, NORTH CAROLINA 28429
SCO# 15-12499-02A
DETAILS

PROJECT #16005
DRAWN: CHH
CHECKED: MKC
APPROVED: MKC
DATE: 05 FEB 2018
PHASE: CD

A4.3

these drawings and specifications represent an instrument of service and as such shall remain in ownership with the architect. use or reproduction by any means, in whole or in part, without the architect's consent, is prohibited.

2/5/2018 | 4:21 AM PST

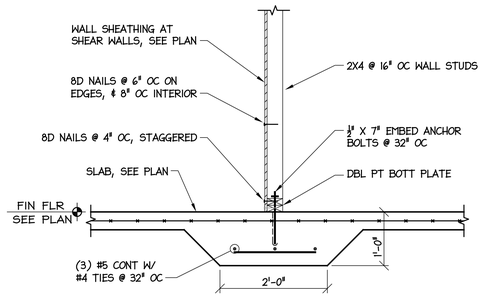

6/S1 INTERIOR SHEAR WALL FTG

SCALE: 3/4" = 1'-0"

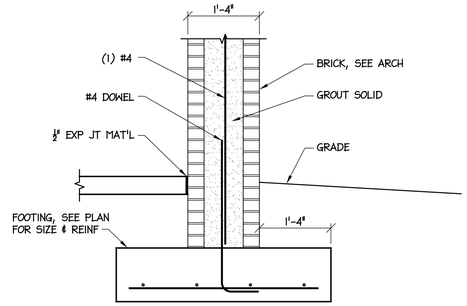

4/S1 BRICK COLUMN FOOTING

SCALE: 3/4" = 1'-0"

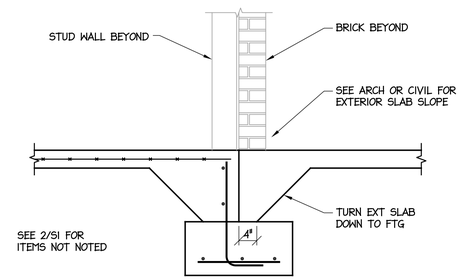

3/S1 EXTERIOR FTG AT DOORS

SCALE: 3/4" = 1'-0"

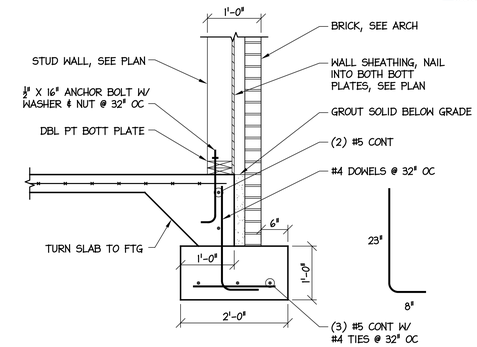

2/S1 EXTERIOR WALL FTG

SCALE: 3/4" = 1'-0"

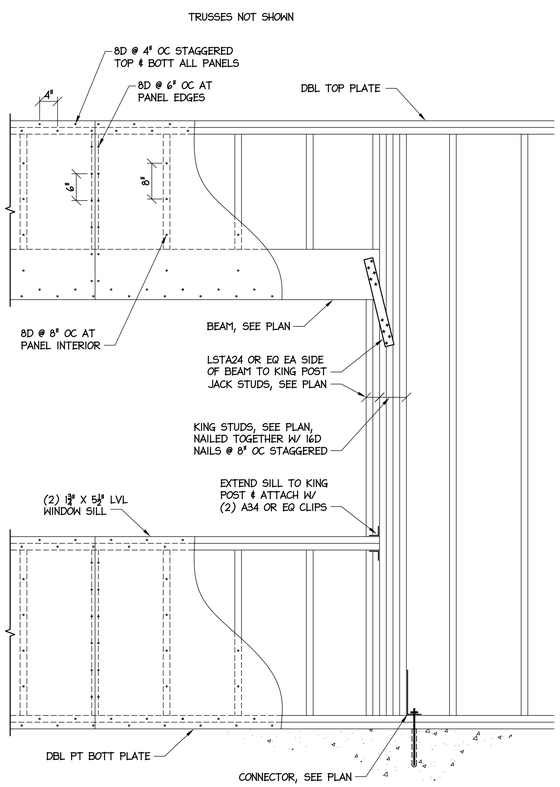

5/S1 FRAMING AT CONF 116 WINDOW

SCALE: 3/4" = 1'-0"

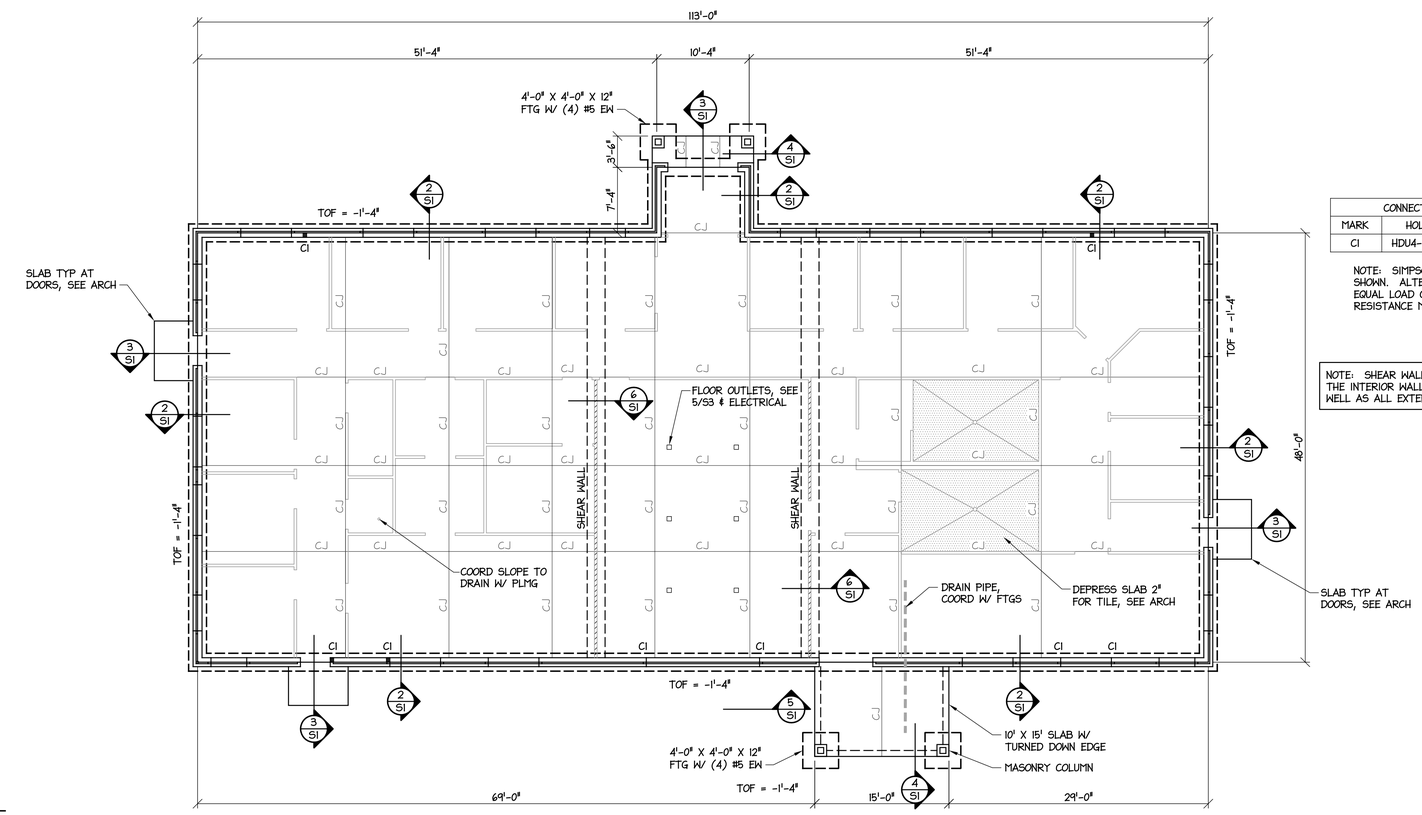

CONNECTOR SCHEDULE	
MARK	HOLDOWN & ANCHOR BOLT
CI	HDU4-SDS2.5 & ⅝" X 6" EMBED

NOTE: SIMPSON CONNECTORS ARE SHOWN. ALTERNATE CONNECTORS W/ EQUAL LOAD CAPACITY & CORROSION RESISTANCE MAY BE USED.

NOTE: SHEAR WALLS INCLUDE THE INTERIOR WALLS NOTED AS WELL AS ALL EXTERIOR WALLS

1/S1 FOUNDATION PLAN

SCALE: 1/8" = 1'-0"

BUILDING NORTH

NOTES:

1. MINIMUM COMPRESSIVE STRENGTH OF CONCRETE = 3000 PSI FOR FOOTINGS & 4000 PSI FOR SLABS. ADD 5% AIR FOR CONCRETE EXPOSED TO WEATHER.
2. REINFORCEMENT SHALL BE A615, GRADE 60.
3. ELEVATIONS SHOWN ON STRUCTURAL DRAWINGS ARE ABOVE FINISH FLOOR, REF ELEVATION = +0'-0".
4. FLOOR SLAB SHALL BE 4" CONC REINF W/ 6X6 - W1.4 X W1.4 WWR ON 14 MIL VAPOR RETARDER OVER 4" GRANULAR BASE.
5. MAINTAIN SLAB THICKNESS AT DEPRESSED & SLOPED SLAB AREAS.
6. ASSURE INSPECTION BY ALL TRADES PRIOR TO PLACING FLOOR SLAB CONCRETE.
7. PROVIDE BROOMED FINISH ON PORCH SLABS. SEE ARCH FOR SEALANT.
8. SEE ARCH PLANS FOR FLOOR FINISHES & DIMENSIONS NOT SHOWN. SEE ARCH OR SITE PLANS FOR EXTERIOR CONCRETE.
9. CJ DENOTES SLAB CONTROL JOINT. SAW JOINTS MIN ¼ SLAB THICKNESS.
10. PX & CX DENOTE POST & CONNECTOR, SEE SCHEDULES THIS SHEET.
11. SEE SITE PLANS FOR CONTINUATION OF CONCRETE SIDEWALKS FROM BUILDING.
12. DIMENSIONS SHOWN ARE FROM OUTSIDE FACE OF SHEATHING & CONC SLAB, UON.
13. COORDINATE FLOOR OUTLETS IN CONF ROOM WITH ELECTRICAL. INSTALL CONDUIT & BOXES IN ACCORDANCE WITH MFR'S WRITTEN INSTRUCTIONS.

BID DRAWINGS

DocuSigned by: Michael Mountcastle
2ADEBE9B635C49A...

SEAL: NORTH CAROLINA PROFESSIONAL ENGINEER SEAL 17326 MICHAEL D. MOUNTCASTLE
SEAL NOT VALID UNLESS SIGNED AND DATED

DESIGNED BY:
FACILITIES DESIGN
ARCHITECTS & ENGINEERS
FACILITIES MANAGEMENT DIVISION, NCDOT
1 SOUTH WILMINGTON STREET
RALEIGH, NORTH CAROLINA 27601
PH:919/707-4640 FAX:919/715-0369

STATE OF NORTH CAROLINA DEPARTMENT OF TRANSPORTATION

CONSULTANT:

DRAWING TITLE / DISCRIPTION:
FDN PLAN
FDN DETAILS

PROJECT TITLE:
DIVISION 3 MULTI-UNIT OFFICE
CASTLE HAYNE, NEW HANOVER CO.
5501 BARBADOS BLVD
CASTLE HAYNE, NC

SCO ID NO.	15-12499-02A
TIP PROJ. NO.	
WBS NO.	
FEDERAL ID NO.	

ASSET NUMBER:
CO.# SITE.# BLDG.#
65 - 47 - -

REVISIONS
NO. DATE

DATE ISSUED: 11-17-17
DRAWN BY: MDM
CHECKED BY: MDM
SHEET NO.
S1

2/5/2018 | 4:21 AM PST

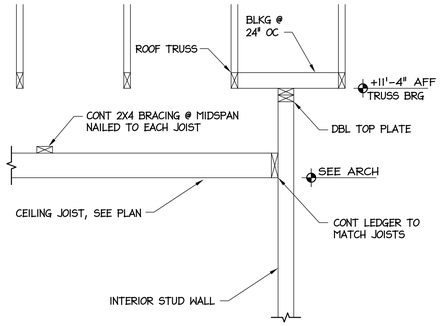

7/S2 INTERIOR CEILING FRAMING
SCALE: 3/4" = 1'-0"

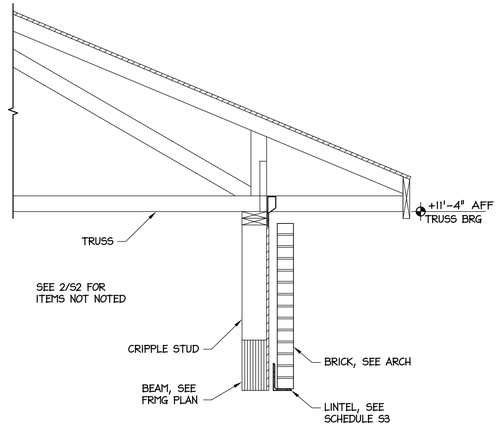

4/S2 TRUSS BRG AT CONF WINDOW
SCALE: 3/4" = 1'-0"

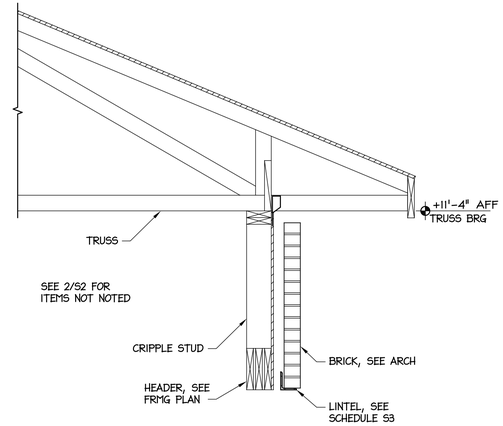

3/S2 TRUSS BRG AT OPENINGS
SCALE: 3/4" = 1'-0"

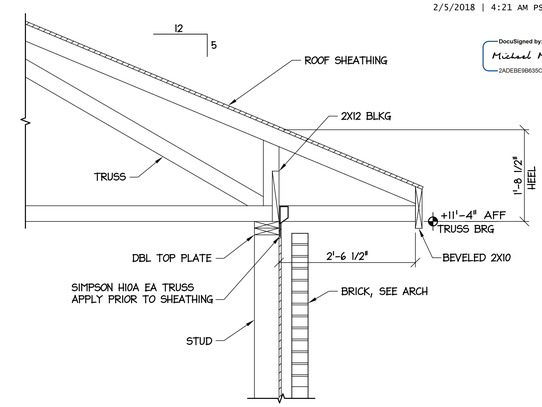

2/S2 TYP ROOF TRUSS BRG
SCALE: 3/4" = 1'-0"

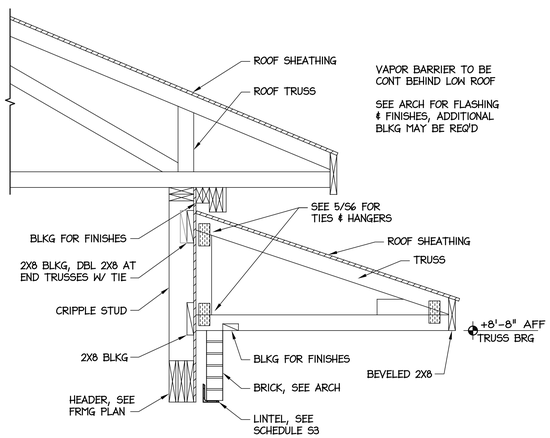

6/S2 ROOF AT DOORS
SCALE: 3/4" = 1'-0"

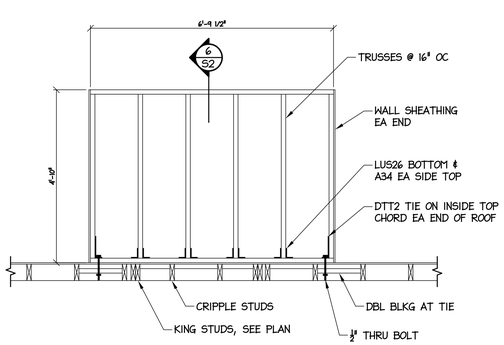

5/S2 PARTIAL PLAN OF ROOF @ DOORS
SCALE: 1/2" = 1'-0"

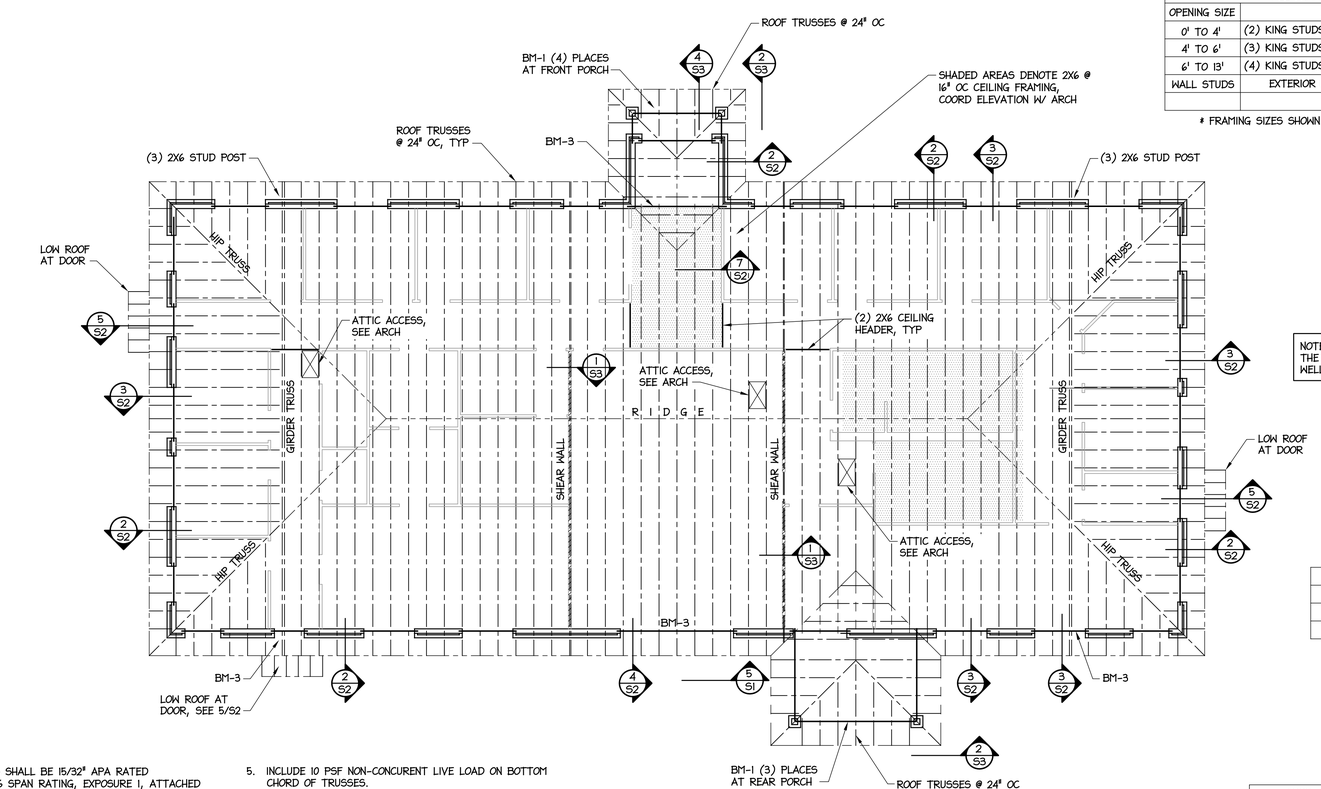

NOTE: SHEAR WALLS INCLUDE THE INTERIOR WALLS NOTED AS WELL AS ALL EXTERIOR WALLS

WALL FRAMING SCHEDULE *		
OPENING SIZE	JAMB	HEADER
0' TO 4'	(2) KING STUDS & (1) JACK STUD	BM-1
4' TO 6'	(3) KING STUDS & (2) JACK STUDS	BM-2
6' TO 13'	(4) KING STUDS & (2) JACK STUDS	SEE PLAN
WALL STUDS	EXTERIOR WALL FRAMING = 2X6 @ 16" OC	

* FRAMING SIZES SHOWN ON PLANS TAKE PRECEDENCE

BEAM SCHEDULE	
BM-1	(3) 2X10
BM-2	(3) 2X12
BM-3	(3) 1-3/4" X 11-1/4" LVL

ROOF SHEATHING NAILING SCHEDULE		
SHEATHING LOCATION	EDGE	INTERIOR
≤ 4' FROM RIDGE & EDGES	4" OC	6" OC
> 4' FROM RIDGE & EDGES	6" OC	8" OC

NOTES:

1. WALL SHEATHING SHALL BE 15/32" APA RATED SHEATHING, 32/16 SPAN RATING, EXPOSURE 1, ATTACHED W/ 8D NAILS. SEE 5/S1 FOR NAIL SIZE & SPACING.
2. ROOF SHEATHING SHALL BE 19/32" APA RATED SHEATHING, EXPOSURE 1, ATTACHED W/ 8D NAILS. SEE SCHEDULE THIS SHEET FOR NAIL SPACING.
3. ROOF TRUSSES SHALL BE DESIGNED FOR ALL LOADS INDICATED ON PLANS & SPECIFICATIONS. SHOP DRAWINGS SHALL BE SEALED BY A PROFESSIONAL ENGINEER LICENSED IN THE STATE OF NC. SEE TITLE SHEET(S) FOR STRUCTURAL DESIGN CRITERIA.
4. BRIDGING & UPLIFT BRACING SHALL BE INSTALLED PER TRUSS MFR REQUIREMENTS. MFR IS RESPONSIBLE FOR BRACING DESIGN. TEMPORARY BRACING IS THE GC'S RESPONSIBILITY.
5. INCLUDE 10 PSF NON-CONCURENT LIVE LOAD ON BOTTOM CHORD OF TRUSSES.
6. ROOF SLOPE = 5:12, UNLESS OTHERWISE NOTED ON PLANS.
7. ELEVATIONS SHOWN ON STRUCTURAL DRAWINGS ARE ABOVE FIRST FINISH FLOOR, REF ELEVATION = +0'-0".
8. SEE LINTEL SCHEDULE SHEET S3 FOR MASONRY LINTELS NOT SPECIFIED. SEE ARCH & MECH FOR OPENINGS NOT SHOWN ON STRUCT PLANS.
9. SEE 1/S1 FOR POST SIZES.
10. DOOR & WINDOW HEADERS NOT OTHERWISE SPECIFIED SHALL BE (3) 2X8.

1/S2 FRAMING PLAN
SCALE: 1/8" = 1'-0"

BUILDING NORTH

BID DRAWINGS

DocuSigned by: Michael Mountcastle
2ADEBE9B635C49A...

NORTH CAROLINA PROFESSIONAL ENGINEER SEAL 17326 MICHAEL D. MOUNTCASTLE
SEAL: SEAL NOT VALID UNLESS SIGNED AND DATED

DESIGNED BY:
FACILITIES DESIGN
ARCHITECTS & ENGINEERS
FACILITIES MANAGEMENT DIVISION, NCDOT
1 SOUTH WILMINGTON STREET
RALEIGH, NORTH CAROLINA 27601
PH:919/707-4640 FAX:919/715-0369

STATE OF NORTH CAROLINA DEPARTMENT OF TRANSPORTATION

CONSULTANT:

DRAWING TITLE / DISCRIPTION:
FRAMING PLAN
FRAMING DETAILS

PROJECT TITLE:
DIVISION 3 MULTI-UNIT OFFICE
CASTLE HAYNE, NEW HANOVER CO.
5501 BARBADOS BLVD
CASTLE HAYNE, NC

SCO ID NO.	15-12499-02A
TIP PROJ. NO.	
WBS NO.	
FEDERAL ID NO.	

ASSET NUMBER:
CO.# SITE.# BLDG.#
65 - 47 - -

REVISIONS
NO. DATE

DATE ISSUED: 11-17-17
DRAWN BY: MDM
CHECKED BY: MDM
SHEET NO.
S2

GENERAL NOTES:

A. GENERAL

1. See specifications for further information. in case of conflict between specifications & drawings, contact architect for resolution.
2. Contractor is responsible for coordination & distribution of all changes in contract documents to all subcontractors.
3. Contractor shall verify all field conditions, elevations, & dimensions prior to construction. Do not scale from plans.
4. Means & methods of construction, including temporary bracing, shoring, & jobsite safety, are the responsibility of the contractor.
5. Structural frame shall be braced until erection is complete & permanent connections & bracing are installed.
6. Provide silt fence or other erosion & sediment control measures as required.
7. If demolition is included in project, sawcut all edges of existing slab and asphalt to remain adjacent to new construction.

B. SEISMIC DESIGN

Importance Factor = 1.00 Occupancy Category = II

Spectral Response Accelerations: Ss = 0.278 S1 = 0.094

Site Classification = D

Design Response Accelerations: Sds = 0.293 Sd1 = 0.150

Seismic Design Category = C

Basic Seismic Force Resisting System = bearing wall

Design Base Shear: Vx = 20.9 kips Vy = 20.9 kips

Response Coefficient, Cs = N/A for Simplified Design Method

Response Modification Factor, R = 6.5

Analysis Method = Simplified per ASCE 7-05 Section 12.14

C. FOUNDATION

1. Footing excavations shall be reviewed by a geotechnical engineer or construction testing agency approved by the architect or engineer.
2. Footing depths shown are based on geotechnical investigation or presumptive soil properties. Soft or unsuitable soils shall be removed & replaced with suitable fill as specified.
3. Under slabs & footings, remove all topsoil, trash, & organic material, & replace with select fill compacted to 95% maximum density as measured by the Standard Proctor Method (ASTM 698) in 12 inch maximum lifts. The top 12" shall be compacted to 98% maximum density.
4. Contractor is responsible for shoring while excavating near existing structures.

D. CONCRETE

1. Compressive strength of concrete shall be 3000 psi for footings & 4000 psi for walls and slabs, unless otherwise noted.
2. Coordinate floor slopes and depressions with arch and plumbing plans. Maintain specified slab thickness below depressed and sloped areas.
3. If not specified on plans, provide sawed slab control joints in slabs on grade spaced at not more than 48 times the slab thickness.
4. Reinforcing steel shall meet ASTM A 615, Grade 60.
5. Welded wire reinforcement shall conform to ASTM A 185 & A 82.
6. Grout under all columns & beam bearing plates with non-shrink, non-metallic grout which meets ASTM C 1107.
7. Clear distance from face of concrete to main reinforcing:

   Suspended slabs and joists: 1"

   Grade beams, pedestals, columns, walls: 2"

   Footings & walls cast against earth: 3"
8. Provide (2) #4 x 48" diagonal corner bars at center of slab at all corners of floor slab openings.
9. Lap all reinforcement splices 48 bar diameters, UON.
10. Detailing, fabrication, & installation of reinforcing steel shall conform to ACI "Manual of Standard Practice for Detailing Reinforced Concrete Structures" (ACI 315).
11. Workmanship, tolerances, & concrete placement shall conform to "Standard Specifications for Structural Concrete" (ACI 301).
12. Chamfer exposed edges of concrete 3/4", UON.
13. Anchor bolts shall conform to ASTM F 1554, Grade 36.
14. See architectural plans for floor finishes. Coordinate slab curing & sealing compounds with flooring materials.
15. Provide ½" expansion joint material between building and exterior concrete, UON.

E. MASONRY

1. Unless otherwise shown, provide control joints in concrete masonry walls at approx 20' OC, & brick expansion joints at approx 40' OC. Coord w/ architect.
2. Provide galvanized metal ties at 16" OC each way for all brick veneer, unless otherwise shown on architectural plans.

F. STRUCTURAL STEEL

1. Structural steel shall conform to ASTM A 572 except: round pipe shall be A 53, Grade B; square and rectangular tube shall be A 500, Grade B.
2. Steel construction shall conform to "Manual of Steel Construction, Allowable Stress Design," Ninth Edition.
3. See architectural & other drawings for miscellaneous steel not shown on structural plans.
4. Beams & lintels shall bear 8" minimum on masonry, UON.

F. WOOD

1. Structural lumber shall be SPF #2 or better, UON. Wood for fabricated trusses shall be SYP #2 or better, except that webs may be SYP #3.
2. Wood in contact with concrete or masonry shall be treated.
3. Straps, ties, hangers, & other connection hardware shall be galvanized.
4. Connections not otherwise detailed shall be in accordance with Tables 2304.9.1.1 thru 2304.9.1.6 of the NC State Building Code.
5. Trusses shall be designed for the full dead & live loads specified in the contract. Submit truss shop drawings bearing the seal of a registered professional engineer licensed in the state of NC. Show truss layout & truss designs including required bracing. Bracing design is the truss designer's responsibility.
6. Contractor shall install both temporary and permanent bracing. Note that permanent bracing is often shown on individual truss calculation pages instead of the truss layout sheet, especially where there is no hard ceiling applied to truss.
7. Additional bracing may be required by engineer of record as indicated on plans for support of gable walls or other items.
8. Install blocking in walls & ceiling where required for partitions, fixtures, & other misc items. Coordinate with all trades.
9. Add ½" plywood spacers at multi-ply wood beams & headers to match wall thickness.
10. All LVL beams & PSL columns shall meet the following:

	E (psi)	Fb (psi)	Fv (psi)	Fc (psi)
LVL	1,900,000	2600	285	n/a
PSL	1,800,000	2400	190	2500

11. Attach multiple LVL beams together with (2) Simpson SDW (or equal) screws @ 16" OC along length of beam.
12. Countersink bolted beam connections where required to clear architectural finishes.

MASONRY LINTEL SCHEDULE

OPENING	STEEL LINTEL	MIN BEARING
0'-0" TO 1'-4"	PLATE 3/8 X 3-1/2	8"
1'-4" TO 4'-0"	L 3-1/2 X 3-1/2 X 5/16	8"
4'-0" TO 6'-0"	L 4 X 3-1/2 X 5/16 LLV	8"
6'-0" TO 8'-0"	L 5 X 3-1/2 X 5/16 LLV	8"
8'-0" TO 13'-0"	L 6 X 4 X 5/16 LLV	8"
SIZES ABOVE ARE PER 4" OF WALL THICKNESS		

1. COORDINATE LINTEL SIZES & LOCATIONS W/ ARCHITECTURAL & MECHANICAL PLANS. ALL MECHANICAL OPENINGS SHALL BE PROVIDED W/ LINTELS AS SPECIFIED HEREIN.
2. SEE ARCHITECTURAL PLANS FOR REQUIRED CLOSURE PLATES UNDER STEEL LINTELS.
3. THIS SCHEDULE APPLIES TO LINTELS NOT SPECIFIED ON PLANS. LINTEL SIZES SHOWN ON PLANS TAKE PRECEDENCE OVER SIZES SPECIFIED ABOVE.

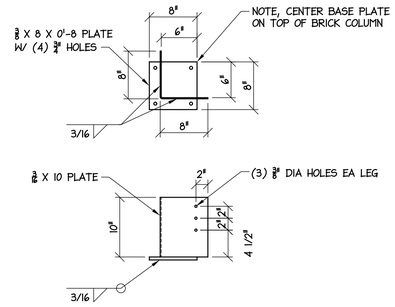

3/S3 FABRICATED COLUMN CAP

SCALE: 1" = 1'-0"

ALL ELECTRICAL WORK TO BE INSTALLED BY ELECTRICIAN & COORDINATED WITH CONCRETE WORK. SEE ELECTRICAL DRAWINGS & SPECIFICATIONS FOR ELECTRICAL WORK.

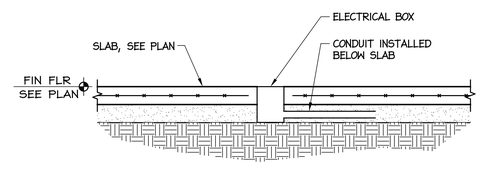

5/S3 UNDERSLAB CONDUIT

SCALE: 3/4" = 1'-0"

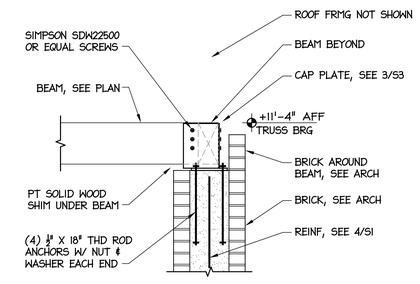

2/S3 BEAM BRG AT BRICK COLUMN

SCALE: 3/4" = 1'-0"

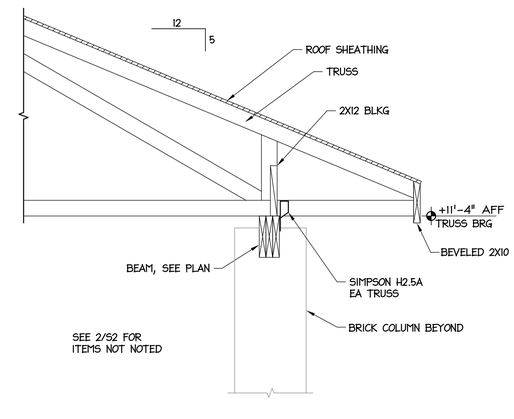

4/S3 TRUSS BRG AT PORCH

SCALE: 3/4" = 1'-0"

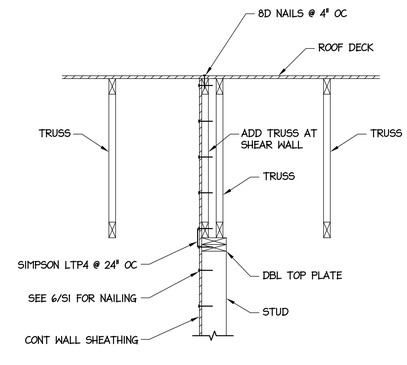

1/S3 INTERIOR SHEAR WALL

SCALE: 3/4" = 1'-0"

BID DRAWINGS

DocuSigned by: Michael Mountcastle 2ADEBE9B635C49A...

NORTH CAROLINA PROFESSIONAL ENGINEER SEAL 17326 MICHAEL D. MOUNTCASTLE

SEAL NOT VALID UNLESS SIGNED AND DATED

DESIGNED BY:

FACILITIES DESIGN
ARCHITECTS & ENGINEERS
FACILITIES MANAGEMENT DIVISION, NCDOT

1 SOUTH WILMINGTON STREET
RALEIGH, NORTH CAROLINA 27601
PH:919/707-4440 FAX:919/715-0369

STATE OF NORTH CAROLINA DEPARTMENT OF ADMINISTRATION

CONSULTANT:

DRAWING TITLE / DISCRIPTION:

DETAILS
GENERAL NOTES

PROJECT TITLE:

DIVISION 3 MULTI-UNIT OFFICE
CASTLE HAYNE, NEW HANOVER CO.

5501 BARBADOS BLVD
CASTLE HAYNE, NC

SCO ID NO.	15-12499-02A
TIP PROJ. NO.	
WBS NO.	
FEDERAL ID NO.	

ASSET NUMBER:

CO.#	SITE.#	BLDG.#
65 -	47 -	-

REVISIONS

NO.	DATE

DATE ISSUED: 11-17-17
DRAWN BY: MDM
CHECKED BY: MDM

SHEET NO.

S3

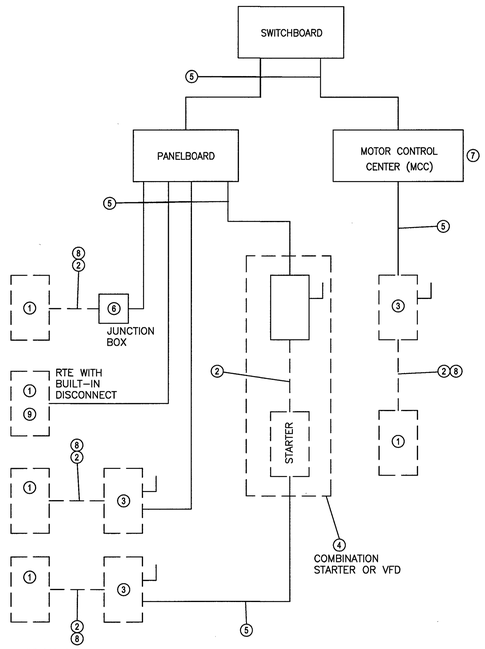

ELECTRICAL NOTES

1. Equipment of trades other than electrical.
2. Conduit and wiring by HVAC or plumbing contractor or other trades.
3. If an additional disconnect switch is required by the NEC, it shall be provided and installed by the contractor furnishing the equipment.
4. A combination starter or VFD may be used in lieu of a separate disconnect switch and starter. Locate adjacent to the equipment.
5. Feeder circuit wiring and conduit in electrical work. See panelboard schedules for wire and circuit breaker sizes.
6. Junction box may be shown on the electrical plans for some equipment. If no starter or disconnect is supplied, a junction box shall be installed adjacent to the equipment. The electrical contractor shall provide line side wiring to the junction box. Load side wiring will be provided by the mechanical contractor or other trades.
7. For projects utilizing an MCC, the starter, circuit breaker, or VFD in the MCC are provided by the electrical contractor.
8. In all cases the equipment contractor shall make final connections, start up, and test the equipment.
9. If roof fan is not provided with built-in switch, the electrical contractor shall provide a disconnect switch.
10. In a single prime contract, it is the responsibility of the prime contractor to coordinate between the electrical and the other trades.

NATURAL GAS SERVICE DATA

SERVICE DESCRIPTION	LOCATION	CAPACITY BTU/HR	PRESSURE
BUSINESS OCCUPANCY HEATING FURNACES	NCDOT DIVISION III MULTI-UNIT BUILDING NEW HANOVER COUNTY DIVISION 3, CASTLE HAYNE SITE 5501 BARBADOS BLVD CASTLE HAYNE, NC 28429	332,000 BTU/HR	2 PSIG

MINIMUM PLUMBING FIXTURES

OCCUPANCY	Number of Persons, Occupancy				
	REFERENCE	MALES	FEMALES	TOTAL	
BUSINESS	ARCHITECT PLANS	50	45	95	
Number of Fixtures Required.					
REQUIRED	REFERENCE	WC FEMALES	WC/UR MALES	Lavatories	Drinking Fountains
	NCSBC PLUMBING	2	2	2	1
Number of Fixtures Provided.					
PROVIDED	REFERENCE	WC FEMALES	WC/UR MALES	Lavatories	Drinking Fountains
	ARCHITECT PLANS	2	4	3	1

WATER SERVICE CALCULATION

INTERNATIONAL PLUMBING CODE APPENDIX E.

ITEM	CW	SFU UNIT HW	TOTAL	QTY	CW	SFU HW	TOTAL
WATER CLOSET-FV	10.0	0.0	10.0	4	40.0	0.0	40.0
LAVATORY PUBLIC	1.5	1.5	2.0	3	4.5	4.5	6.0
URINAL-FV	5.0	0.0	5.0	2	10.0	0.0	10.0
MOP SINK	2.3	2.3	3.0	1	2.3	2.3	3.0
KITCHEN SINK	1.0	1.0	1.4	1	1.0	1.0	1.4
ELECTR WATER COOLER	0.5	0.0	0.5	1	0.5	0.0	0.5
MOP SINK	2.3	2.3	3.0	1	2.3	2.3	3.0
TOTAL FIXTURE UNITS					60.5	7.8	63.9
REQUIRED FIXTURE UNITS							38.4

TABLES E103.3 VALUE GPM*	56	GPM		MAXIMUM SUPPLY TO BLDG.
				*FOR THE REQUIRED FIXTURE UNITS
FREEZE PROOF WALL HYDRANTS	-	GPM	2	NONCOINCIDENT
HOSE BIBBS	-	GPM	2	NONCOINCIDENT
PIPE SIZE SELECTION	2	INCH		VELOCITY = 5.0 FT PER SECOND.
				LOSS = 2.2 PSI/100 FT
WATER SUPPLY PRESSURE				50 PSIG

DFU CALCULATION

ITEM	DFU UNIT	QTY	DFU TOTAL
FLOOR DRAINS	2.0	2	4
WATER CLOSET-FV	4.0	3	12
LAVATORY	1.0	3	3
URINAL-FV	4.0	2	8
KITCHEN SINK	2.0	1	2
DRINKING FOUNTAIN	0.5	1	0.5
SERVICE SINK	2.0	1	2
TOTAL DRAIN FIXTURE UNITS			31.5

LEGEND

	CONNECT TO EXISTING
— 1-1/2"DCW —	DOMESTIC COLD WATER, SIZE INDICATED.
—— DHW ——	DOMESTIC HOT WATER.
—— DHWR ——	DOMESTIC HOT WATER RETURN
— 2"W —	SANITARY DRAIN, SIZE INDICATED.
— 2"V —	PLUMBING VENT, SIZE INDICATED
VTR	VENT THRU ROOF.
FD	FLOOR DRAIN, f-FUNNEL, h-HUBBED, tp-TRAP PRIMER
	FLOOR (CO) & WALL CLEAN-OUT (WCO)
	WATER HAMMER ARRESTOR (WHA-B), PDI SIZE B
DFU	DRAINAGE FIXTURE UNIT
SFU	SUPPLY FIXTURE UNIT
A.F.F.	ABOVE FINISH FLOOR
	CIRCUIT SETTER
	CHECK VALVE, HINGE INDICATES FLOW DIRECTION
	BALL VALVE
	HOSE BIBB (HB) OR FREEZE PROOF WALL HYDRANT (FPWH)
	VACUUM RELIEF VALVE (VB)

PROJECT NO.: P1540~004
DRAWING NO.: P1 OF 4

STROUD ENGINEERING, P.A.
107B COMMERCE STREET
GREENVILLE, NC 27858
(252) 756-9352
LICENSE NO. C-0647
WAYNE C. NELSON, P.E.
1/9/18

FACILITIES DESIGN
ARCHITECTS & ENGINEERS
FACILITIES MANAGEMENT DIVISION, NCDOT
1 SOUTH WILMINGTON STREET
RALEIGH, NORTH CAROLINA 27601
PHONE:919/707-4640 FAX:919/715-0399

CONSTRUCTION DOCUMENTS

NORTH CAROLINA PROFESSIONAL ENGINEER SEAL 12516 WAYNE C. NELSON

CONSULTANT

DRAWING TITLE / DESCRIPTION
PLUMBING COVER

PROJECT TITLE
CASTLE HAYNE MULTI-UNIT OFFICE BUILDING
NEW HANOVER COUNTY, DIVISION 3, NCDOT
5310 BARBADOS BLVD., SUITE 102
CASTLE HAYNE, NORTH CAROLINA 28429
NEW HANOVER COUNTY, NORTH CAROLINA

STATE CONSTRUCTION
ID# 15-12499-02A

ASSET NUMBER:
CO# SITE# BLDG#
71 -

REVISIONS
NO. DATE

DATE ISSUED: 1/9/18
DRAWN BY: WCN
CHECKED BY: LMS
SHEET NO.
P1 OF 4

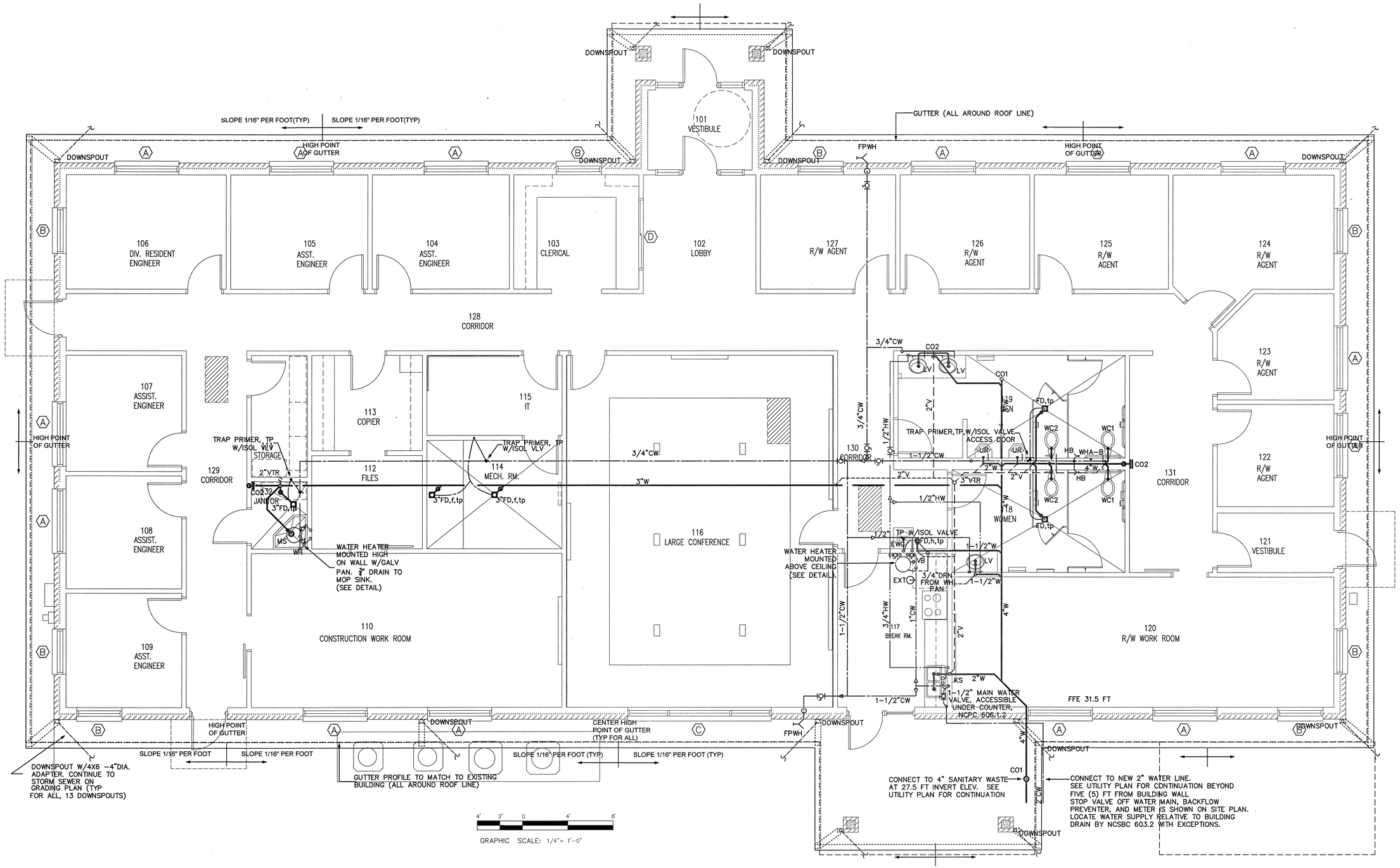

PLUMBING PLAN

SCALE: 1/4" = 1'-0"

1 / P2

PROJECT NO.: P1540-004

DRAWING NO.: P2 OF 4

STROUD ENGINEERING, P.A.
107B COMMERCE STREET
GREENVILLE, NC 27858
(252) 756-9352
LICENSE NO. C-0647
WAYNE C. NELSON, P.E.

CONSTRUCTION DOCUMENTS

NORTH CAROLINA PROFESSIONAL SEAL 12516 ENGINEER WAYNE C. NELSON

FACILITIES DESIGN
ARCHITECTS & ENGINEERS
FACILITIES MANAGEMENT DIVISION, NCDOT
1 SOUTH WILMINGTON STREET
RALEIGH, NORTH CAROLINA 27601
PHONE:919/707-4540 FAX:919/715-0399

STATE OF NORTH CAROLINA DEPARTMENT OF TRANSPORTATION

CONSULTANT

DRAWING TITLE / DESCRIPTION

PLUMBING
DWV & WATER PLAN

PROJECT TITLE

CASTLE HAYNE MULTI-UNIT OFFICE BUILDING
NEW HANOVER COUNTY, DIVISION 3, NCDOT
5310 BARBADOS BLVD., SUITE 102
CASTLE HAYNE, NORTH CAROLINA 28429
NEW HANOVER COUNTY, NORTH CAROLINA

STATE CONSTRUCTION
ID# 15-12499-02A

ASSET NUMBER:
CO# SITE# BLDG#
71 -

REVISIONS

NO.	DATE

DATE ISSUED: 1/9/18
DRAWN BY: WCN
CHECKED BY: LMS

SHEET NO.
P2 OF 4

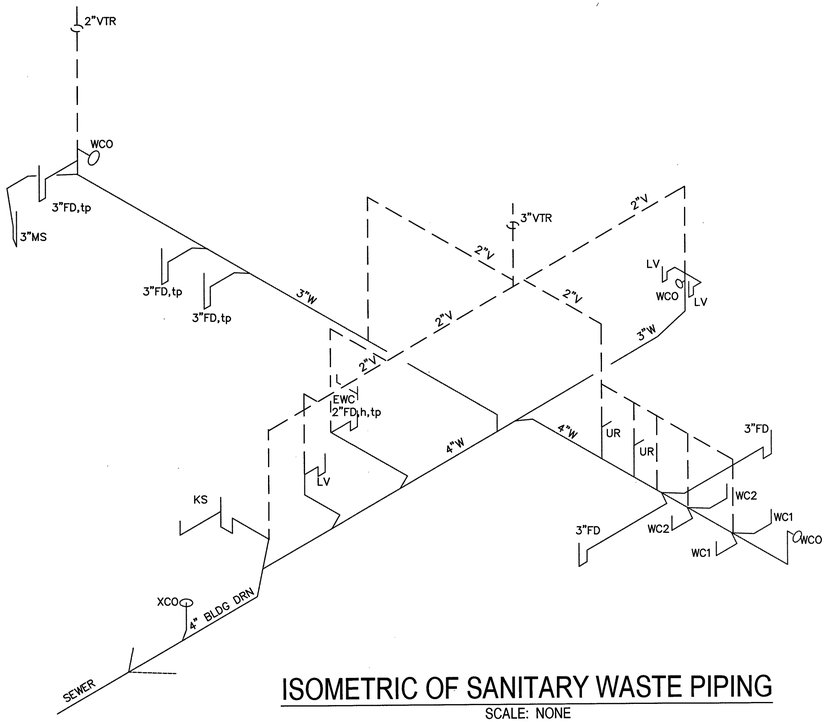

ISOMETRIC OF SANITARY WASTE PIPING

SCALE: NONE

5 / P3

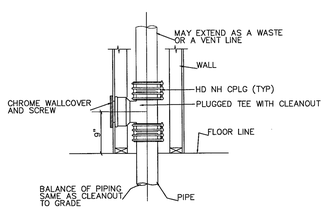

NOTE: CLEANOUT TO BE FLUSH WITH FINISHED WALL.

WALL TYPE CLEANOUT (WCO)

SCALE: NONE

4 / P3

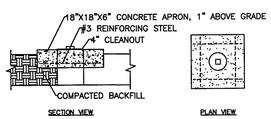

INGROUND TYPE CLEANOUT (XCO)

SCALE: NONE

3 / P3

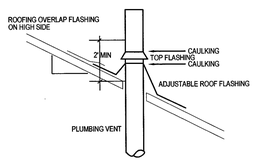

PLUMBING VENT THRU ROOF(VTR)

SCALE: NONE

2 / P3

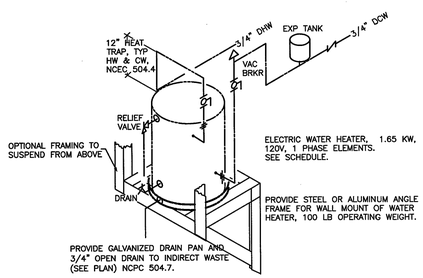

POINT OF USE WATER HEATER

SCALE: NONE

1 / P3

PROJECT NO.: P1540~004

DRAWING NO.: P3 OF 4

PLUMBING FIXTURE SCHEDULE

MARK	DESCRIPTION	WATER CW	WATER HW	WATER SUPPLY STOP	WASTE ROUGH-IN	ELECTRICAL VOLTAGE (VAC)	ELECTRICAL WATTS	ELECTRICAL MCA	NOTES
LV	COUNTER TOP LAVATORY (ACCESSIBLE)	1/2"	1/2"	ANGLE VALVE, LEAD FREE	1 1/4"	N/A	N/A	N/A	ADA APPROVED, EXPOSED PIPING UNDER ADA LAVATORY SHALL BE INSULATED. PROVIDE FAUCET & GRID STRAINER DRAIN, 0.5 GPM AT 60 PSI. ADA INSULATION FOR EXPOSED SUPPLIES AND DRAIN.
MS	MOP SINK, PROTECTED AGAINST BACKFLOW NCSBC PLMB 608.13, 3" FLOOR DRAIN WITH FLANGE AND CLAMPING COLLAR. DRAIN TO HAVE REMOVEABLE STRAINER.	1/2"	1/2"	BALL VALVE, LEAD FREE	3"	N/A	N/A	N/A	SIZE AND SHAPE OF MOP SINK AS INDICATED IN PLAN.
WC1	WATER CLOSET (ACCESSIBLE)	1"	N/A	FLUSH VALVE	3"	N/A	N/A	N/A	FLOOR MOUNT, FLUSH VALVE TYPE, 1.6 GPF, ADA COMPLIANT
WC2	WATER CLOSET	1"	N/A	FLUSH VALVE	3"	N/A	N/A	N/A	FLOOR MOUNT, FLUSH VALVE TYPE, 1.6 GPF.
EWC	BI-LEVEL ADA COOLER W/BOTTLE FILLING STATION, 8 GPH, 370 WATTS, FILTERED, WALL MOUNTED, UL 399. NSF/ANSI 61 AND 372 LEAD FREE). 36-3/4" WIDTH X 19" DEPTH X 39-1/2" HEIGHT. ELKAY MODEL LZSTL8WSLP OR EQUAL BY OTHER MANUFACTURERS.	1/2"	---	BALL VALVE, LEAD FREE	1-1/2"	110 / 1 PH	670.0	5.6	NSF/ANSI 61 & 372 LEAD FREE
KS	SINK, TOP OR UNDER MOUNT, ADA COMPLIANT, TWO BOWLS, 33" X 22" X 6", 20 GAUGE TYPE 302 OR 304 STAINLESS STEEL WITH UNDERCOATING, 4" CENTERSET CHROME PLATED BRASS GOOSENECK FAUCET, NSF 61 AND NSF 372 LEAD FREE, ASME A112.19.3, MFG BY ELKAY, KOHLER, AMERICAN STANDARD, OR EQUAL.	1/2"	1/2"	ANGLE VALVE, LEAD FREE	1-1/2"	N/A	N/A	N/A	CHROME PLATE BRASS SUPPLIES AND DRAIN. ADA INSULATION FOR EXPOSED SUPPLIES AND DRAIN.
UR	URINAL	3/4"	N/A	FLUSH VALVE	2"	N/A	N/A	N/A	ADA APPROVED, 1.0 GPF

PLUMBING SPECIALTIES SCHEDULE

MARK	DESCRIPTION	CW	HW	WASTE	REMARKS
HB	HOSE BIBB, CHROME PLATED, LOOSE HEX KEY OPERATED, WITH INTEGRAL VACUUM BREAKER AND ANTI SIPHON FAUCET HOSE CONNECTION, ASSE 1011, PRIER C355NP, OR WOODFORD, WATTS, OR WILKINS..	1/2"	--	--	--
FPWH	FREEZEPROOF ANTISIPHON, WALL HYDRANT, AUTOMATIC DRAINING, SILL COCK, WITH BACK FLOW PREVENTION, ASSE-1019, HEX KEY OPERATED, PRIER C-634, WOODFORD 67, WATTS, OR WILKINS.	3/4"	--	--	PROVIDE ACCESSIBLE BALL VALVE IN THE SUPPLY PIPING TO THE HYDRANT. DROP TO WALL HYDRANT TO BE LOCATED INSIDE OF INSULATION.
AR	WATER HAMMER ARRESTORS, STAINLESS STEEL, SIOUX CHIEF 650 SERIES, JOSAM 75000 SERIES, OR EQUAL BY ZURN-WILKINS OR WATTS. SIZE TO MATCH PDI SYMBOL AS INDICATED ON PLAN.	AS INDICATED TO MATCH PDI SYMBOL		--	--
FD, FD,tp,f,h	FLOOR DRAIN, COATED CAST IRON, TWO PIECE BODY, DOUBLE DRAINAGE FLANGE, WEEPHOLES, 5" DIA, NICKLE ALLOY ADJUSTABLE AND REMOVEABLE STRAINER, ZURN, JOSAM, WADE, OR SMITH ACCEPTABLE.	--	--	2"	,tp ADD TRAP PRIMER ,f ADD FUNNEL ,h HUBBED
WCO	CLEANOUT, WALL, COATED CAST IRON CLEANOUT TEE OR PLUG WITH NO HUB CONNECTION, SMOOTH ROUND CHROME PLATED OR STAINLESS STEEL ACCESS COVER. JOSAM 58700 SERIES, ZURN, WADE, OR SMITH ACCEPTABLE.	--	--	SIZE AS INDICATED	--
XCO	CLEANOUT, EXTERIOR, COATED CAST IRON CLEANOUT FERRULE, CAST BRASS PLUG WITH SLOTTED HEAD, SET IN CENTER OF 18" X 18" X 6" THICK CONCRETE PAD FLUSH WITH GRADE	--	--	SIZE AS INDICATED	MOUNT IN MINIMUM OF 18"X 18" SQUARE SECTION OF CONCRETE
VB	VACUUM RELIEF VALVE, BRASS BODY, TESTED AND RATED TO ANSI Z21.CC, WATTS N36, WILKINS VR10, OR EQUAL.	1/2"	--	--	HIGH POINT OF COLD WATER SUPPLY TO WATER HEATER TO PREVENT VACUUM CONDITION IN WATER HEATER.
REG	PRESSURE REDUCING VALVE, ASSE 1003, CAST BRONZE ASTM B 584 BODY AND BELL HOUSING, THREADED END CONNECTIONS W/UNION, WITH PRESSURE GAUGE, WILKINS MODEL 600, WATTS, OR EQUAL				PROVIDE AFTER SERVICE ISOLATION VALVE IF STATIC WATER SUPPLY PRESSURE EXCEEDS 80 PSIG
TP	TRAP PRIMER, PRESSURE DROP ACTIVATED, PROVIDE WITH AIR GAP FITTING AND DISTRIBUTOR TO SUPPLY TWO FLOOR DRAINS. JOSAM 88300, PRECISION PLUIMBING PRODUCTS PR-500, MIFAB MR-500, OR EQUAL.	1/2"	--	1/2"	SUPPLY TRAP PRIMER WITH 1/2" COPPER TUBING FROM TOP OF WATER LINE. DROP INTO 1/2" SERVICE VALVE AND 1/2" NPT CONNECTION AT TOP OF TRAP PRIMER. PROVIDED AIR GAP W/DISTRIBUTOR TO FLOOR DRAIN BELOW PRIMER. PROVIDE 1/4" GRAVITY COPPER TUBE(S) AT CONTINUOUS SLOPE TO CONNECTION AT FLOOR DRAINS.
WH	WATER HEATER, POINT OF USE TYPE, 6 GALLON STORAGE, SINGLE-ELEMENT, 120 VOLT SINGLE PHASE, 2000 WATT, SIDE WATER CONNECTIONS, ASME RATED T&p VALVE, COMPLIES WITH SPECIFICATION UL-174, 6 YEAR WARRANTY, RHEEM PROE6 1 RH POU, A.O. SMITH EJC-6, BRADFORD WHITE, STATE, OR APPROVED EQUAL.	3/4"	3/4"	--	PROVIDE THERMAL EXPANSION TANK, OPERATING WEIGHT APPROXIMATELY 100 LBS. PROVIDE ALUMINUM OR STEEL FRAME FOR WALL MOUNT.
EXT	THERMAL EXPANSION TANK, ASME DESIGN & CONSTRUCTION, 2 GALLON VOLUME, 0.5 GALLON ACCEPTANCE, AMTROL ST-5C, OR MFG BY ARROW, WATTS, OR EQUAL BY WATER HEATER MFG.	1/2"	--	--	CONNECT AT COLD WATER SIDE OF WATER HEATER

STROUD ENGINEERING, P.A.
107B COMMERCE STREET
GREENVILLE, NC 27858
(252) 756-9352
LICENSE NO. C-0647
WAYNE C. NELSON, P.E.

CONSTRUCTION DOCUMENTS

NORTH CAROLINA PROFESSIONAL SEAL 12516 ENGINEER WAYNE C. NELSON

FACILITIES DESIGN
ARCHITECTS & ENGINEERS
FACILITIES MANAGEMENT DIVISION, NCDOT
1 SOUTH WILMINGTON STREET
RALEIGH, NORTH CAROLINA 27601
PHONE:919/707-4540 FAX:919/715-0399

STATE OF NORTH CAROLINA DEPARTMENT OF TRANSPORTATION

CONSULTANT

DRAWING TITLE / DESCRIPTION

PLUMBING SCHEDULES AND DETAILS

PROJECT TITLE

CASTLE HAYNE MULTI-UNIT OFFICE BUILDING
NEW HANOVER COUNTY, DIVISION 3, NCDOT

5310 BARBADOS BLVD., SUITE 102
CASTLE HAYNE, NORTH CAROLINA 28429
NEW HANOVER COUNTY, NORTH CAROLINA

STATE CONSTRUCTION ID# 15-12499-02A

ASSET NUMBER: CO# SITE# BLDG#
71 –

REVISIONS

NO.	DATE

DATE ISSUED: 1/9/18
DRAWN BY: WCN
CHECKED BY: LMS

SHEET NO.

P3 OF 4

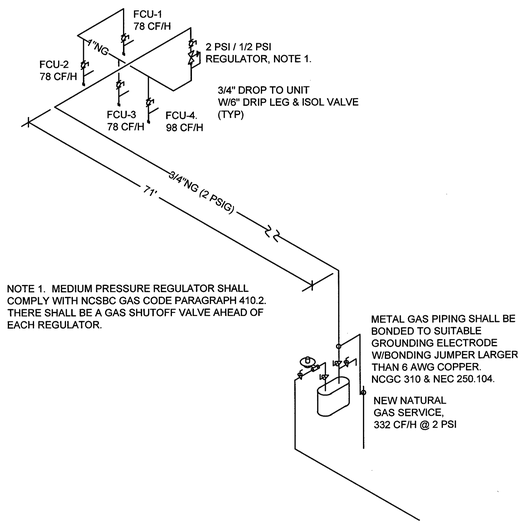

NOTE 1. MEDIUM PRESSURE REGULATOR SHALL COMPLY WITH NCSBC GAS CODE PARAGRAPH 410.2. THERE SHALL BE A GAS SHUTOFF VALVE AHEAD OF EACH REGULATOR.

NATURAL GAS PIPING ISOMETRIC

SCALE: NONE

2 / P4

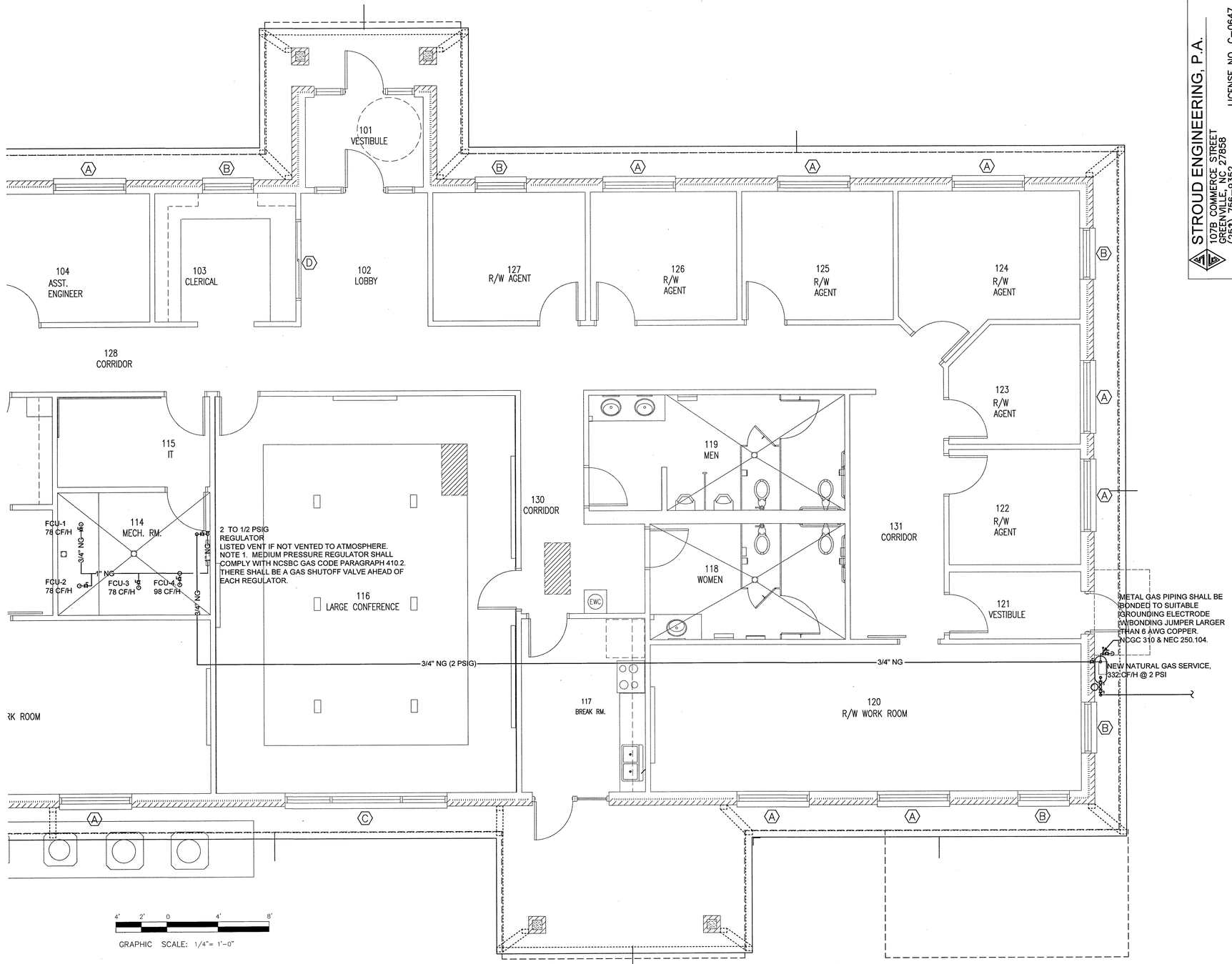

NATURAL GAS PIPING PARTIAL PLAN

SCALE: 1/4" = 1'-0"

1 / P4

PROJECT NO.: P1540-004

DRAWING NO.: P4 OF 4

STROUD ENGINEERING, P.A.
107B COMMERCE STREET
GREENVILLE, NC 27858
(252) 756-9352
LICENSE NO. C-0647
WAYNE C. NELSON, P.E.

CONSTRUCTION DOCUMENTS

NORTH CAROLINA PROFESSIONAL SEAL 12516 ENGINEER WAYNE C. NELSON

FACILITIES DESIGN
ARCHITECTS & ENGINEERS
FACILITIES MANAGEMENT DIVISION, NCDOT
1 SOUTH WILMINGTON STREET
RALEIGH, NORTH CAROLINA 27601
PHONES 919/707-4540 FAX 919/715-0399

STATE OF NORTH CAROLINA * NCDOT * DEPARTMENT OF TRANSPORTATION

CONSULTANT

DRAWING TITLE / DESCRIPTION

PLUMBING
NATURAL GAS PLAN
& ISOMETRIC

PROJECT TITLE

CASTLE HAYNE MULTI-UNIT OFFICE BUILDING
NEW HANOVER COUNTY, DIVISION 3, NCDOT

5310 BARBADOS BLVD., SUITE 102
CASTLE HAYNE, NORTH CAROLINA 28429
NEW HANOVER COUNTY, NORTH CAROLINA

STATE CONSTRUCTION
ID# 15-12499-02A

ASSET NUMBER:

CO#	SITE#	BLDG#
71 –		

REVISIONS

NO.	DATE

DATE ISSUED:	1/9/18
DRAWN BY:	WCN
CHECKED BY:	LMS

SHEET NO.

P4 OF 4

REFRIGERANT SAFETY EVALUATION

UNIT MARK NO.	SYSTEM CLASSIFICATION (1103.3)	REFRIGERANT CLASSIFICATION	ALLOWABLE REFRIGERANT PER OCCUPIED SPACE LBS / 1000 CF (NOTE 3.)	VOLUME OF MECHANICAL ROOM SPACE CUBIC FEET (CF)	LBS OF REFRIGERANT IN SYSTEM AS SPECIFIED (NOTE 2.)	EMERGENCY VENTILATION EXHAUST REQUIREMENTS, CFM.	POTENTIAL CONCENTRATION OF REFRIGERANT IN OCCUPIED SPACE = LBS/1000 CF > ALLOWABLE (NOTE 3.)
CU-1	HIGH PROBABILITY SYSTEM	R410a, A1	25	1292	12	EMERGENCY = 2300	9.3

NOTES:
1. REFRIGERANT CALCULATIONS BASED UPON CHAPTER 11 OF THE 2012 NORTH CAROLINA STATE BUILDING CODE, MECHANICAL CODE,
2. REFRIGERANT CHARGE FOR LARGEST, 5 TON, SPLIT SYSTEM HEAT PUMP SYSTEM, MARK NO. CU-1 AND FC-1.
3. ACCEPTABLE RISK OF HUMAN EXPOSURE TO REFRIGERANT IS DEMONSTRATED WHEN POTENTIAL CONCENTRATION IS LESS THAN ALLOWABLE CONCENTRATION. THE POTENTIAL REEFRIGERANT CONCENTRATION IN THE SPACE IS LESS THAN THE ALLOWABLE.

NCDOT CASTLE HAYNE MULTI-OFFICE OUTDOOR AIR VENTILATION REQUIREMENTS

ZONE			OCCUPANCY CLASSIFICATION TABLE 403.3	AREA OF ZONE, Az	NUMBER OF OCCUPANTS IN ZONE ARCHITECT DATA Pz	Rp, OUTDOOR AIR FLOW REQUIRED PER PERSON	Ra, OUTDOOR AIR FLOW REQUIRED PER UNIT AREA	CALCULATED OUTDOOR AIR (BREATHING ZONE) FOR SPACE (NOTES 3&4) (Rp x Pz) + (Ra x Az)	ZONE AIR DISTRIBUTION EFFECTIVENESS, TABLE 403.3.1.2	ZONE OUTDOOR AIR VENTILATION RATE, Voc
UNIT	RM NUMBER	RM NAME	---	SF	---	CFM / PERSON	CFM / SF	CFM	---	CFM
FC-4	116	ASSEMBLY	OFFICES - CONFERENCE ROOMS	729	48	5	0.06	284	0.8	355
FC-1	101	VESTIBULE	OFFICES - RECEPTION AREA	71	1	5	0.06	9	0.8	12
FC-1	102	LOBBY	OFFICES - RECEPTION AREA	104	4	5	0.06	26	0.8	33
FC-1	103	CLERICAL	OFFICE - OFFICE SPACE	112	1	1	0.06	8	0.8	10
FC-1	104	COUNTY MAINT ENGR	OFFICE - OFFICE SPACE	122	1	5	0.06	12	0.8	15
FC-1	105	MAINT SUPERVISOR	OFFICE - OFFICE SPACE	121	1	5	0.06	12	0.8	15
FC-1	106	DIV PAVEMENT ENGR	OFFICE - OFFICE SPACE	155	1	5	0.06	14	0.8	18
FC-1	123	RESIDENT ENGINEER	OFFICE - OFFICE SPACE	155	2	5	0.06	19	0.8	24
FC-1	124	BRIDGE MAINT ENGR	OFFICE - OFFICE SPACE	119	1	5	0.06	12	0.8	15
FC-1	125	SAFETY OFFICER	OFFICE - OFFICE SPACE	116	1	5	0.06	12	0.8	15
FC-1	126	CONFERENCE	OFFICES - CONFERENCE ROOMS	122	6	5	0.06	38	0.8	47
FC-1	127	CORRIDOR	PUBLIC SPACE - CORRIDOR	452	0	5	0.06	27	0.8	34
FC-2	107	ASSIST ENGR	OFFICE - OFFICE SPACE	118	1	5	0.06	12	0.8	15
FC-2	108	ASSIST ENGR	OFFICE - OFFICE SPACE	123	1	5	0.06	12	0.8	15
FC-2	109	OFFICE TECH	OFFICE - OFFICE SPACE	120	1	5	0.06	12	0.8	15
FC-2	110	PAVEMENT MAINT TECHS	OFFICE - OFFICE SPACE	375	8	5	0.06	63	0.8	78
FC-2	111	STORAGE	STORAGE	84	0	5	0.06	7	0.8	9
FC-2	112	FILES	OFFICE - OFFICE SPACE	81	0	5	0.06	7	0.8	9
FC-2	113	COPIER	OFFICE - OFFICE SPACE	82	1	5	0.06	10	0.8	12
FC-2	114	MECH RM	OFFICE - OFFICE SPACE	116	0	5	0.06	10	0.8	12
FC-2	115	JANITOR	OFFICE - OFFICE SPACE	82	0	5	0.06	7	0.8	9
FC-2	128	CORRIDOR	PUBLIC SPACE - CORRIDOR	168	0	5	0.06	10	0.8	13
FC-3	117	BREAK ROOM	OFFICE - RECEPTION AREA	131	4	5	0.06	28	0.8	35
FC-3	118	WOMEN'S REST ROOM	PUBLIC SPACES - TOILET ROOM	142	0	5	0.06	9	0.8	11
FC-3	119	MENS'S REST ROOM	PUBLIC SPACES - TOILET ROOM	180	0	5	0.06	11	0.8	14
FC-3	120	BRIDGE MAINT	OFFICE - OFFICE SPACE	388	7	5	0.06	58	0.8	73
FC-3	121	VESTIBULE	OFFICES - RECEPTION AREA	57	0	5	0.06	6	0.8	8
FC-3	122	TRAFFIC AREA BRIDGE TECHS	OFFICE - OFFICE SPACE	188	2	5	0.06	21	0.8	27
FC-3	129	CORRIDOR	PUBLIC SPACE - CORRIDOR	116	0	5	0.06	7	0.8	9
FC-3	130	CORRIDOR	PUBLIC SPACE - CORRIDOR	138	0	5	0.06	8	0.8	10
TOTALS FC-1				1649	19					238
TOTALS FC-2				1349	12					188
TOTALS FC-3				1340	13					185
TOTALS FC-4				729	48					355
TOTALS ARE THE GREATER OF OCCUPANCY PER BUILDING CODE OR PER ARCHITECT (NOTE 4.).			---	5067	92					966

NOTES:
1. VENTILATION & OCCUPANCY AS REQUIRED BY 2012 NC STATE BUILDING CODE, TABLE 403.3
2. BASED UPON AREA OF ZONE.
3. THE CALCULATED VENTILATION AIR THE SUM OF AIR REQUIRED FOR OCCUPANCY AND AIR REQUIRED FOR DIFFUSION EFFECTIVENESS
4. THE VENTILATION AIR REQUIRED FOR EACH SPACE IS BASED ON THE LARGER NUMBER OF OCCUPANTS, AS SPECIFIED BY THE ARCHITECT OR AS CALCULATED BY NCSBC MECH TABLE 403.3.

MECHANICAL SYSTEMS, SERVICE SYSTEMS AND EQUIPMENT

METHOD OF COMPLIANCE

Prescriptive X Energy Cost Budget

Climate Zone	3A
Exterior design conditions	
0.4% winter dry bulb	20 F
1.0% summer dry bulb/wet bulb	91.3 / 75.7 F
Interior design conditions	
winter dry bulb	70 F
summer dry bulb	74 F
relative humidity	50 %
Building heating load	87,400 BTU/HR
Building cooling load	157,200 BTU/HR
Mechanical Space Conditioning Systems	
Unitary description	This energy analysis is for DX split system cooling and heating by gas furnaces. Loads include conditioning of ventilation air.
heating efficiency	see plan schedules
cooling efficiency	see plan schedules
heat output of unit	see plan schedules
cooling output of unit	see plan schedules

List equipment efficiencies

Equipment schedules with motors (mechanical systems)

motor horsepower	see plan schedules
number of phases	see plan schedules
minimum efficiency	see plan schedules
motor type	see plan schedules
# of poles	see plan schedules

DESIGNER STATEMENT:
To the best of my knowledge and belief, the design of this building complies with the mechanical systems, service systems and equipment requirements of the North Carolina State Building Code, 2012, Volume Energy.

SIGNED:

NAME: Wayne C. Nelson

TITLE: Mechanical Engineer, PE 12516

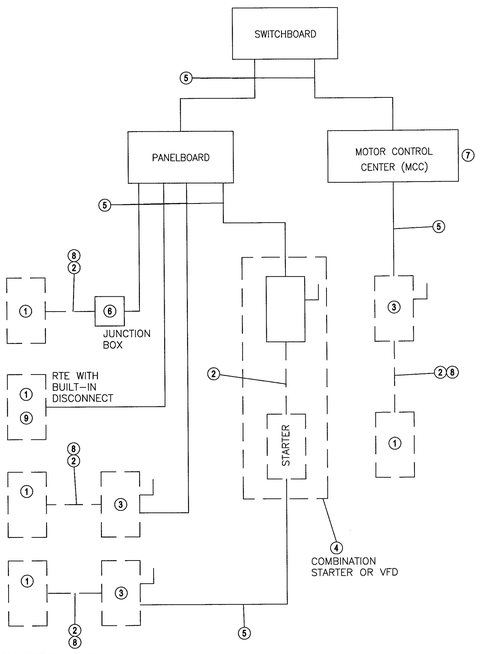

ELECTRICAL NOTES

1. Equipment of trades other than electrical.
2. Conduit and wiring by HVAC or plumbing contractor or other trades.
3. If an additional disconnect switch is required by the NEC, it shall be provided and installed by the contractor furnishing the equipment.
4. A combination starter or VFD may be used in lieu of a separate disconnect switch and starter. Locate adjacent to the equipment.
5. Feeder circuit wiring and conduit in electrical work. See panelboard schedules for wire and circuit breaker sizes.
6. Junction box may be shown on the electrical plans for some equipment. If no starter or disconnect is supplied, a junction box shall be installed adjacent to the equipment. The electrical contractor shall provide line side wiring to the junction box. Load side wiring will be provided by the mechanical contractor or other trades.
7. For projects utilizing an MCC, the starter, circuit breaker, or VFD in the MCC are provided by the electrical contractor.
8. In all cases the equipment contractor shall make final connections, start up, and test the equipment.
9. If roof fan is not provided with built-in switch, the electrical contractor shall provide a disconnect switch.
10. In a single prime contract, it is the responsibility of the prime contractor to coordinate between the electrical and the other trades.

EQUIPMENT CONNECTION RESPONSIBILITY

SCALE: NONE

1 / M1

MECHANICAL & PLUMBING LEGEND

SOME SYMBOLS MAY NOT BE USED IN THIS PROJECT

SYMBOL	DESCRIPTION
	POINT OF CONNECTION NEW TO EXISTING
	FLOW DIRECTION
	BALANCING DAMPER
	DUCT OR PIPE ELBOW, UP
	DUCT OR PIPE ELBOW, DOWN
S/40	SUPPLY REGISTER IN FLOOR OR CEILING
R/40	RETURN REGISTER IN FLOOR OR CEILING
BDD	BACKDRAFT DAMPER
T	THERMOSTAT OR TEMPERATURE SENSOR
H CO2	HUMIDITY SENSOR, CO2 SENSOR
2	DUCT SMOKE DETECTOR
MD	ELECTRIC MOTOR DRIVEN DAMPER
	1 HOUR FIRE BARRIER
	1 HOUR FIRE PARTITION
AFF	ABOVE FINISHED FLOOR
BOD	BOTTOM OF DUCT
FD	FLOOR DRAIN

STROUD ENGINEERING, P.A.
107B COMMERCE STREET
GREENVILLE, NC 27858
(252) 756-9352
LICENSE NO. C-0647
WAYNE C. NELSON, P.E.

CONSTRUCTION DOCUMENTS

NORTH CAROLINA PROFESSIONAL SEAL 12516 ENGINEER WAYNE C. NELSON

1/9/18

FACILITIES DESIGN ARCHITECTS & ENGINEERS
FACILITIES MANAGEMENT DIVISION, NCDOT
1 SOUTH WILMINGTON STREET
RALEIGH, NORTH CAROLINA 27601
PHONES 919/707-4944 FAX 919/715-0399

STATE OF NORTH CAROLINA NOLAN J. BOSENBERG DEPARTMENT OF TRANSPORTATION

CONSULTANT

DRAWING TITLE / DESCRIPTION

MECHANICAL COVER

PROJECT TITLE

CASTLE HAYNE MULTI-UNIT OFFICE BUILDING
NEW HANOVER COUNTY, DIVISION 3, NCDOT
5310 BARBADOS BLVD., SUITE 102
CASTLE HAYNE, NORTH CAROLINA 28429
NEW HANOVER COUNTY, NORTH CAROLINA

STATE CONSTRUCTION
ID# 15-12499-02A

ASSET NUMBER:
CO# SITE# BLDG#
71 -

REVISIONS
NO. DATE

DATE ISSUED: 1/9/18
DRAWN BY: WCN
CHECKED BY: LMS
SHEET NO.
M1 OF 4

PROJECT NO.: P1540~004
DRAWING NO.: M1 OF 4

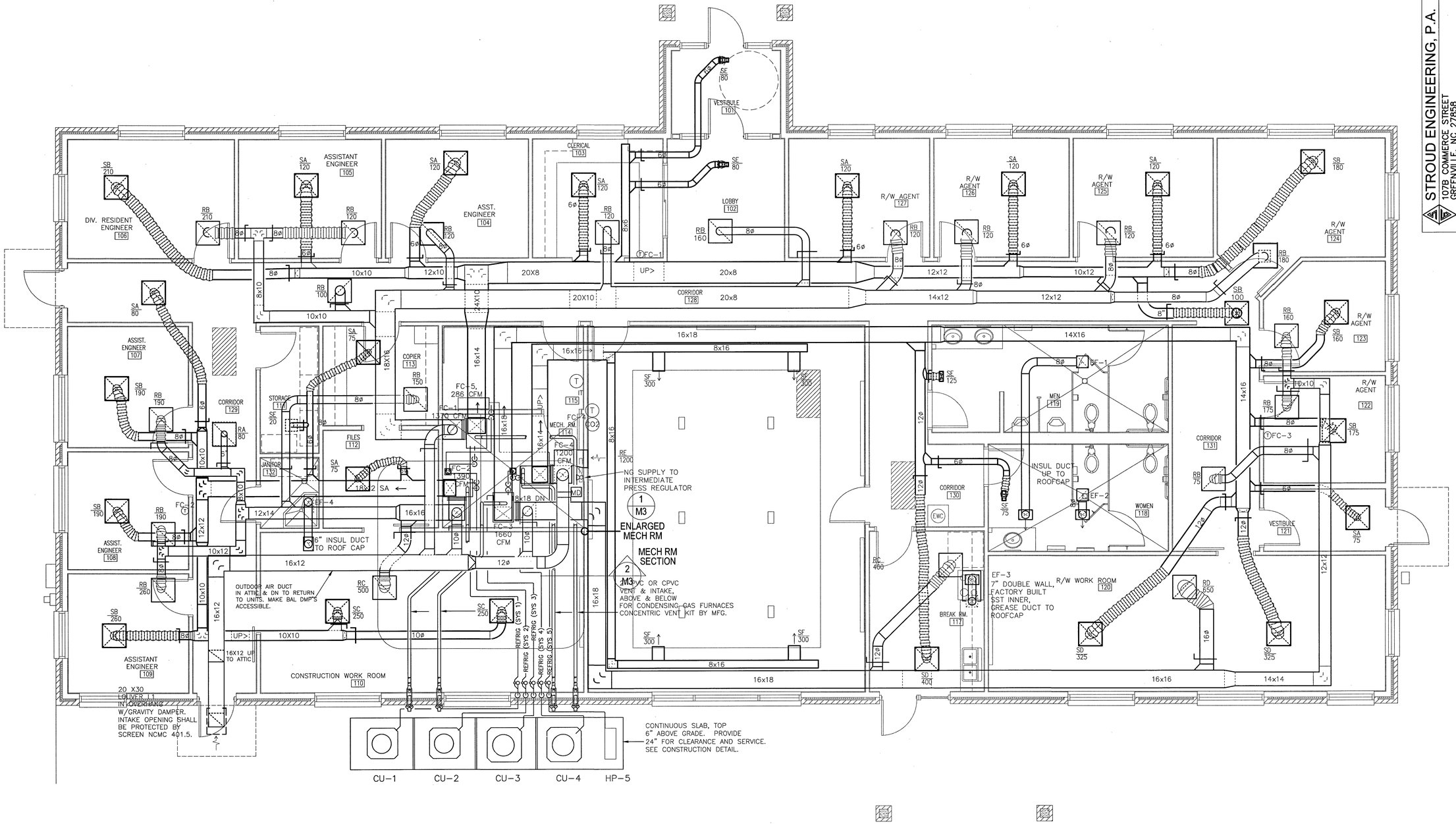

MECHANICAL PLAN, NEW CONSTRUCTION

SCALE: 1/4" = 1'-0"

1 / M2

NORTH

GRAPHIC SCALE: 1/4"= 1'-0"

PROJECT NO.: P1540-004

DRAWING NO.: M2 OF 4

STROUD ENGINEERING, P.A.
107B COMMERCE STREET
GREENVILLE, NC 27858
(252) 756-9352
LICENSE NO. C-0647
WAYNE C. NELSON, P.E.

CONSTRUCTION DOCUMENTS

NORTH CAROLINA PROFESSIONAL SEAL 12516 ENGINEER WAYNE C. NELSON

FACILITIES DESIGN
ARCHITECTS & ENGINEERS
FACILITIES MANAGEMENT DIVISION, NCDOT
1 SOUTH WILMINGTON STREET
RALEIGH, NORTH CAROLINA 27601
PHONE:919/707-4540 FAX:919/715-0399

STATE OF NORTH CAROLINA DEPARTMENT OF TRANSPORTATION

CONSULTANT

DRAWING TITLE / DESCRIPTION

MECHANICAL PLAN

PROJECT TITLE

CASTLE HAYNE MULTI-UNIT OFFICE BUILDING
NEW HANOVER COUNTY, DIVISION 3, NCDOT

5310 BARBADOS BLVD., SUITE 102
CASTLE HAYNE, NORTH CAROLINA 28429
NEW HANOVER COUNTY, NORTH CAROLINA

STATE CONSTRUCTION

ID# 15-12499-02A

ASSET NUMBER:

CO#	SITE#	BLDG#
71	–	

REVISIONS

NO.	DATE

DATE ISSUED: 1/9/18
DRAWN BY: WCN
CHECKED BY: LMS

SHEET NO.

M2 OF 4

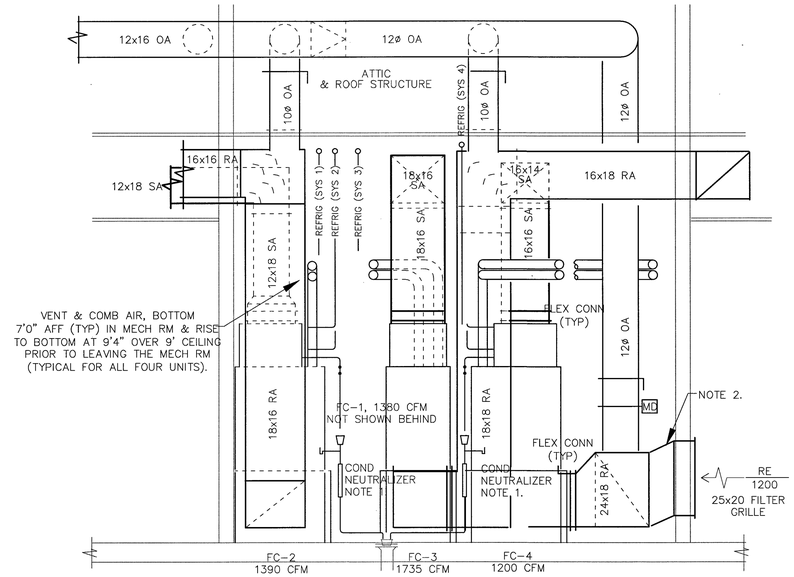

NOTE 1. PROVIDE 3/4" PVC DRAINS FOR CONDENSATE FROM COOLING COIL AND FURNACE WITH AIR GAP BETWEEN. PROVIDE TRAP FOR EACH (IF NOT BUILT IN TO THE EQUIPMENT). PROVIDE NEUTRALIZER IN VERTICAL DRAIN FROM EACH CONDENSING FURNACE, NEUTRA-SAFE CLEAR TUBE NEUTRALIZER OR EQUAL. EXPOSED DRAINS FROM NEUTRALIZER TO FLOOR DRAIN SHALL BE GALVANIZED STEEL.
NOTE 2. PROVIDE 1" ACOUSTICAL LINER FOR RETURN TO THIS UNIT, ONLY.

MECHANICAL ROOM, SECTION

SCALE: 1/2" = 1'0"

2
M3

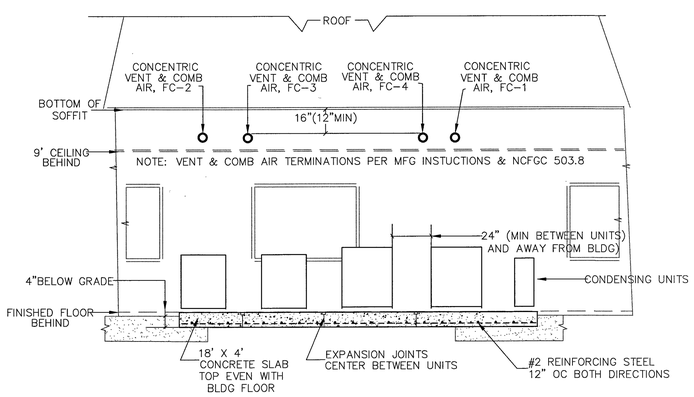

MECHANICAL PARTIAL SOUTH ELEVATION AT VENT TERMINATIONS

SCALE: 1/4" = 1'0"

3
M3

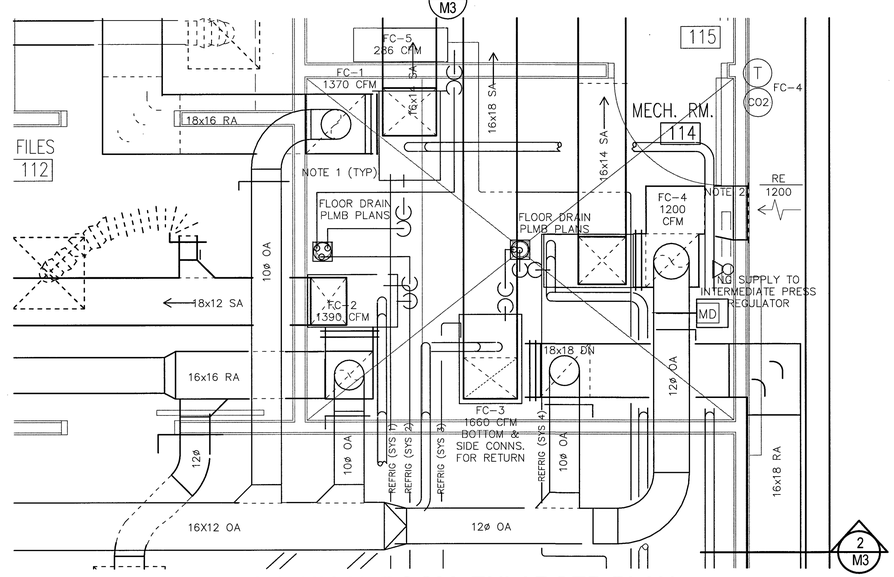

MECHANICAL ROOM, ENLARGED PLAN

SCALE: 1/2" = 1'0"

1
M3

PROJECT NO.: P1540-004
DRAWING NO.: M3 OF 4

STROUD ENGINEERING, P.A.
107B COMMERCE STREET
GREENVILLE, NC 27858
(252) 756-9352
LICENSE NO. C-0647
WAYNE C. NELSON, P.E.
1/9/18

CONSTRUCTION DOCUMENTS

NORTH CAROLINA PROFESSIONAL SEAL 12516 ENGINEER WAYNE C. NELSON

FACILITIES DESIGN
ARCHITECTS & ENGINEERS
FACILITIES MANAGEMENT DIVISION, NCDOT
1 SOUTH WILMINGTON STREET
RALEIGH, NORTH CAROLINA 27601
PHONE:919/707-4540 FAX:919/715-0399

STATE OF NORTH CAROLINA DEPARTMENT OF TRANSPORTATION

CONSULTANT

DRAWING TITLE / DESCRIPTION
MECHANICAL
ENLARGED PLAN
AND SECTIONS

PROJECT TITLE
CASTLE HAYNE MULTI-UNIT OFFICE BUILDING
NEW HANOVER COUNTY, DIVISION 3, NCDOT
5310 BARBADOS BLVD., SUITE 102
CASTLE HAYNE, NORTH CAROLINA 28429
NEW HANOVER COUNTY, NORTH CAROLINA

STATE CONSTRUCTION
ID# 15-12499-02A

ASSET NUMBER:
CO# SITE# BLDG#
71 –

REVISIONS
NO. DATE

DATE ISSUED: 1/9/18
DRAWN BY: WCN
CHECKED BY: LMS

SHEET NO.
M3 OF 4

FURNACES AND CONDENSING UNITS SCHEDULE

SERVICE			NORTH OFFICES, LOBBY & ENTRY	WEST OFFICES, CONSTRUCTION WORK ROOM	EAST OFFICES, R/W WORKROOM	LARGE CONFERENCE ROOM
OUTDOOR UNIT			CU-1	CU-2	CU-3	CU-4
DESCRIPTION			CONDENSING UNIT	CONDENSING UNIT	CONDENSING UNIT	CONDENSING UNIT
MANUFACTURER AND MODEL			CARRIER 24ANB736A003	CARRIER 24ANB736A003	CARRIER 24ANB748A003	CARRIER 24ANB748A003
NOMINAL UNIT SIZE			3 TONS	3 TONS	4 TONS	4 TONS
DIMENSIONS			24"-30"SQ X 32-42" HT	24"-30"SQ X 32-42" HT	24"-30"SQ X 32-42" HT	24"-30"SQ X 32-42" HT
COOLING PERFORMANCE	EER @ARI CONDITIONS/SEER (BTU/WATT)		--- / 13	--- / 13	--- / 13	--- / 13
COMPRESSOR	TYPE		SCROLL / TWO STAGE	SCROLL / TWO STAGE	SCROLL / TWO STAGE	SCROLL / TWO STAGE
REFRIGERANT	Type / Charge lbs		R410A	R410A	R410A	R410A
	Expansion Device		TXV	TXV	TXV	TXV
ELECTRIC	Volts / Phase		208 / 1	208 / 1	208 / 1	208 / 1
	MCA / MOCP		20 / 35	20 / 35	27.8 / 40	27.8 / 40
INDOOR UNIT			FURN-1	FURN-2	FURN-3	FURN-4
Description			UPFLOW, FURNACE W/COOLING COIL, DIRECT FIRED, CONDENSING TYPE	UPFLOW, FURNACE W/COOLING COIL, DIRECT FIRED, CONDENSING TYPE	UPFLOW, FURNACE W/COOLING COIL, DIRECT FIRED, CONDENSING TYPE	UPFLOW, FURNACE W/COOLING COIL, DIRECT FIRED, CONDENSING TYPE
MANUFACTURER AND MODEL			CARRIER MN7A060V17-14	CARRIER MN7A060V17-14	CARRIER MN7A080V21-20	CARRIER MN7A060V17-14
INDOOR UNIT	INDOOR PARAMETERS	SUPPLY COOLING (CFM)	1490 @ .5 ESP	1390 @ .5 ESP	1660 @ .6 ESP	1200 @ .5 ESP
		SUPPLY HEATING LOW (CFM)	415	415	555	415
		OUTDOOR AIR (CFM)	250	200	200	355 MAX, 90 MINIMUM
	COOLING COIL	DESCRIPTION	CASED DX COOLING COIL	CASED DX COOLING COIL	CASED DX COOLING COIL	CASED DX COOLING COIL
		DIMENSIONS	TO MATCH FURNACE	TO MATCH FURNACE	TO MATCH FURNACE	TO MATCH FURNACE
		MANUFACTURER AND MODEL	CARRIER CNPV3617ATA	CARRIER CNPV3617ATA	CARRIER CNPV4821ATA	CARRIER CNPV4821ATA
		TOTAL COOLING BTU/HR	39,600	35,300	45,100	42,000
		SENSIBLE COOLING BTU/HR	29,400	28,600	35,600	24,300
		ENT AIR DB / WB	80 / 67	80 / 67	80 / 67	80 / 67
	FURNACE	DIMENSIONS	17"x30"x35"HT	17"x30"x35"HT	21"x30"x35"HT	17"x30"x35"HT
			16"x16" DUCT	16"x16" DUCT	18"x16" OUTLET	16"x16" DUCT
		LOW HTG OUTPUT, BTU/H	25,400	17,700	22,400	19,600
		AFUE %	96	96	96	96
		FUEL	NATURAL GAS	NATURAL GAS	NATURAL GAS	NATURAL GAS
	INDOOR FAN	DESCRIPTION	VARIABLE SPEED ECM BLOWER MOTOR	VARIABLE SPEED ECM BLOWER MOTOR	VARIABLE SPEED ECM BLOWER MOTOR	VARIABLE SPEED ECM BLOWER MOTOR
		MOTOR HP	3/4 HP	3/4 HP	1 HP	1/2 HP
	ELECTRIC	POWER SUPPLY	120 / 1	120 / 1	120 / 1	120 / 1
		UNIT AMPS MCA / CKT BKR	14 / 15 AMPS	14 / 15 AMPS	18 / 20 AMPS	11.5 / 15 AMPS

Notes:

1. Cooling load rating is based on AHRI Standard 210/240 or 340/360 , 95 deg F DB Ambient, 80 deg F DB/67 deg F W.B. entering evaporator.
2. High Heating is based on Standard 70F entering temperature, 47 deg F DB Ambient. Low Heating is based on Standard 70F entering temperature, 17 deg F DB Ambient..
3. Units shall comply with ASHRAE 90.1 Energy Standard for minimum EER and IEER requirements.
4. Units shall have capability for two stages cooling and modulation of heating.
5. Outdoor units shall have nonfused factory disconnect switch, suction line accumulator, service valves, high and low pressure switches, Internal pressure relief valve, internal thermal overload, and coil guard.
6. Indoor units shall have factory disconnect switch(es), hard shutoff, thermostatic expansion valves (TXV), liquid line filter drier, time-delay relay, programmable thermostat, and outdoor air temperature sensor.
7. Units shall have accessories for low ambient cooling as follows: compressor start assist capacitor and relay, crankcase heater, evaporator freeze thermostat, hard shutoff TXV, isolation relay (switches low ambient controller off in heating mode), and low ambient fan controller.
8. Provide concrete pads for outdoor units and metal stands for indoor units. Concrete pad and sub bases shall raise indoor units to fit condensate drain.
9. Provide factory user interface controls. Thermostat with built in humidistat shall control space temperature and humidity.
10. Manufacturer: Carrier, Trane, McQuay, Johnson Controls, or Equal.

FAN SCHEDULE

MARK	SERVICE	LOCATION	TYPE	MFR	MODEL	HOUSING DIMENSION & WEIGHT	CONNECTIONS	CFM	ESP (INWC)	SONES	MOTOR POWER	VOLTS/ PHASE
EF-1	MECHANICAL EXHAUST OF MEN'S TOILET ROOM	CEILING	CEILING HIGH CAPACITY FAN	BROAN	L-300	14" X 14" GRILLE 12-1/4 X 12-1/4 X 11-3/4 HT 23.1 LBS	OUTLET 8" RND	308	0.1	2.9	212 WATTS	120 / 1
EF-2	MECHANICAL EXHAUST OF WOMENS TOILET ROOM	CEILING	CEILING HIGH CAPACITY FAN	BROAN	L-300	14" X 14" GRILLE 12-1/4 X 12-1/4 X 11-3/4 HT	OUTLET 8" RND	308	0.1	2.9	212 WATTS	120 / 1
EF-3	MECHANICAL EXHAUST OF RANGE HOOD	KITCHEN RANGE HOOD INTERNAL FAN	UNDERCOUNTER STAINLESS STEEL W/LIGHTING	BROAN	QP236SS	36" WIDTH	OUTLET 7" RND	350	0.1	.6 NORMAL, 5.0 HIGH	2.8 FAN AMPS AND FOUR 50W LAMPS	120 / 1
EF-4	MECHANICAL EXHAUST OF JANITORS CLOSET	HIGH IN JANITOR CLOSET	SUSPENDED LOW CAPACITY UTILITY EXHAUST FAN	BROAN	673	6-1/4" ROUND HOUSING, 8" DIA GRILLE	VERTICAL OUTLET 6" RND	60	0.1	4.5	40 WATTS	120 / 1

NOTES

1. PROVIDE ROOF CAP FOR 8" DIA ROUND DUCT CONNECTION AND SLOPED ROOF. BROAN MODEL 634 OR EQUAL BY GREENHECK OR LOREN COOK.
2. FOR RANGE HOOD, PROVIDE DOUBLE WALL, UL 1978, STAINLESS STEEL INNER WALL DUCT FROM HOOD CONNECTION TO ROOF CAP.
3. MANUFACTURER OF FANS AND ROOF CAPS: BROAN OR EQUAL BY GREENHECK OR COOK .

DIFFUSER, REGISTER, AND GRILLE SCHEDULE

MARK	FUNCTION	MFR	MODEL	MTG	SIZE / FLOW NECK	DAMPER	MTL	NOTES
SA	DIFFUSER, PLAQUE, ACT CEILING	PRICE	SPD	24X24 ACOUSTICAL TILE CEILING	6"	OBD	ALUM	1, 2, 3
SB	DIFFUSER, PLAQUE, ACT CEILING	PRICE	SPD	24X24 ACOUSTICAL TILE CEILING	8"	OBD	ALUM	1, 2, 3
SC	DIFFUSER, PLAQUE, ACT CEILING	PRICE	SPD	24X24 ACOUSTICAL TILE CEILING	10"	OBD	ALUM	1, 2, 3
SD	DIFFUSER, PLAQUE, ACT CEILING	PRICE	SPD	24X24 ACOUSTICAL TILE CEILING	12"	OBD	ALUM	1, 2, 3
SE	DIFFUSER, FLUSH MOUNT IN CEILLING	PRICE	SPD	12" X 12", ACT OR GYP CEILING	6"	OBD	ALUM	1, 2, 3
SF	REGISTER, DOUBLE DEFLECTION, FLUSH MOUNT IN WALL	PRICE	620DAL	12" X 8", SOFFIT WALL	DUCT SIZE	OBD	ALUM	1, 2, 3
EA	CEILING REGISTER TOILET ROOM EXHAUST	PRICE	APDF	GYPBOARD CEILING	12X12 FACE 8" DIA DUCT CONN	OBD	ALUM	1, 2, 3
RA	RETURN FILTER GRILLE, ACT CEILLING	PRICE	APDF	24X24 ACOUSTICAL TILE CEILING	22X22 FILTER 6"DIA DUCT	OBD	ALUM	1, 2, 3
RB	RETURN FILTER GRILLE, ACT CEILLING	PRICE	APDF	24X24 ACOUSTICAL TILE CEILING	22X22 FILTER 8"DIA DUCT	OBD	ALUM	1, 2, 3
RC	RETURN FILTER GRILLE, ACT CEILLING	PRICE	APDF	24X24 ACOUSTICAL TILE CEILING	22X22 FILTER 12"DIA DUCT	OBD	ALUM	1, 2, 3
RD	RETURN FILTER GRILLE, SIDEWALL	PRICE	APDF	24X24 ACOUSTICAL TILE CEILING	22 X 22 FILTER SIZE 16"DIA DUCT	OBD	ALUM	1, 2, 3
RE	RETURN FILTER GRILLE, SIDEWALL	PRICE	APDF	Sidewall	20 X 25 FILTER SIZE	OBD	ALUM	1, 2, 3
RF	CEILING RETURN FILTER GRILLE	PRICE	APDF	FLUSH MOUNT IN CEILING	12" X 6" FILTER SIZE	OBD	ALUM	1, 2, 3

NOTES

1. Manufacturer: Price or equals by MetalAire,Tuttle & Bailey, Titus, or Nailor Industries.
2. Coordinate color with Architect and Owner.
3. Maximum noise level is 30 NC.

SEQUENCE OF OPERATION:

CU-1, FURN-1: LOBBY AND NORTH OFFICES:

CU-2, FURN-2: CONSTRUCTION WORK ROOM AND WEST OFFICES:

CU-3, FURN-3: BRIDGE MAINTENANCE AND EAST OFFICES:

CU-4, FURN-4 CONFERENCE ROOM:

SEQUENCE IS SAME FOR THE FOUR (4) HEATING AND COOLING SYSTEMS ABOVE:

Units shall be scheduled through programmable thermostat for operation with building operating (occupied) hours. When occupied, the indoor fan will run continuous to supply conditioned and ventilation air to the space. When not, the indoor air fan will cycle on and off with the heating and cooling equipment to maintain unoccupied space temperature set point. The manual outdoor air ventilation damper is balanced to provide specified ventilation. All furnaces shall be provided with high temperature limit devices in accordance with NCMC 603.19.5.

Cooling:
The thermostat shall start the indoor fan (if fan is not already in operation), and initiate 1st stage compressor operation. Upon further increase in space temperature, the compressor speed shall increase to 2nd stage of compressor operation.

Low ambient cooling is cooling when OAT is less than 55F. Speed control or shutdown of the outdoor fan motor is implemented to limit condenser heat transfer. Accessories required for low ambient cooling include compressor start assist capacitor and relay, crankcase heater, evaporator freeze thermostat, hard shutoff TXV, isolation relay, and support feet.

Heating:
The natural gas fired furnace runs in two stages of heating. The furnaces are provided with factory controls which limit leaving air temperature to comply with NCSBC Mechanical 603.19.5.

Dehumidification:
Factory system controls which employ variable speed operation ECM motors and other functions to dehumidify during cooling shall be submitted where applicable.

CU-4, FURN-4 CONFERENCE ROOM:

Demand controlled ventilation only in conference room: Conference room HVAC system shall have automatic damper in the outdoor air supply to the unit which is controlled by space CO2 sensor. Upon sensing occupied condition in the conference room the damper shall open to maximum ventilation air. When unoccupied the damper shall close to stop at minimum outdoor air.

CU-5, FC-5 TELECOM ROOM:

Ductless split unit heat pump, set in cooling, thermostat with single temperature setting for continuous operation. Manual setting in heating when required.

EXHAUST FANS.

The toilet room exhaust fan shall run continuous during occupied hours and intermittently with space lighting during unoccupied hours.

The janitors closet exhaust fan shall run intermittently with space lighting.

The range hood exhaust fan shall run by operation of the fan switch.

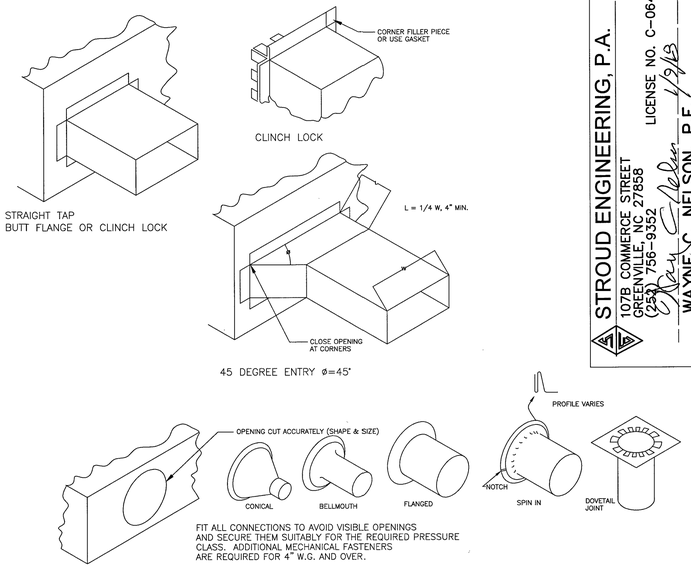

DUCT BRANCH CONNECTIONS

SCALE: NONE

2 / M4

DUCTLESS HEAT PUMP SCHEDULE

SERVICE		TELECOM ROOM
OUTDOOR UNIT		HP-5
MANUFACTURER		MITSUBISHI
MODEL		MUZ-FH09NA
DESCRIPTION		HEAT PUMP SYSTEM (1 INDOOR UNIT)
PERFORMANCE COOLING	COOLING (BTU/HR)	9,000
	COOLING EER / COP / SEER (BTU/WattHR)	--- / --- / 30.5
PERFORMANCE HEATING	HEATING (BTU/HR)	10,900
	HEATING COP / HSPF (BTU/WattHR)	--- / 13.5
ELECTRIC (NOTE 2.)	Volts / Phase	208/230/1
	MCA / MOCP (AMPS)	12 / 15
INDOOR UNIT(S)		FC-5
MANUFACTURER		MITSUBISHI
MODEL		MSZ-FH09NA
DESCRIPTION		WALL MOUNTED
COOLING	CFM	286
HEATING	CFM	321
ELECTRIC (NOTE 2.)	POWER SUPPLY FROM OUTDOOR UNIT	208/230/1

NOTE: 1. CONTROL BY MFG THERMOSTAT, PROGRAMMABLE WALL MOUNTED THERMOSTAT, WIRED CONTROL.
2. INDOOR UNIT(S) POWERED FROM OUTDOOR UNIT.

PROJECT NO.: P1540~004
DRAWING NO.: M4 OF 4

STROUD ENGINEERING, P.A.
107B COMMERCE STREET
GREENVILLE, N.C. 27858
(252) 756-9352
LICENSE NO. C-0647
WAYNE C. NELSON, P.E. 1/9/13

CONSTRUCTION DOCUMENTS

NORTH CAROLINA PROFESSIONAL SEAL 12516 ENGINEER WAYNE C. NELSON

FACILITIES DESIGN
ARCHITECTS & ENGINEERS
FACILITIES MANAGEMENT DIVISION, NCDOT
1 SOUTH WILMINGTON STREET
RALEIGH, NORTH CAROLINA 27601
PHONE:919/707-4540 FAX:919/715-0399

STATE OF NORTH CAROLINA NORTH CAROLINA DEPARTMENT OF TRANSPORTATION

CONSULTANT

DRAWING TITLE / DESCRIPTION
MECHANICAL DETAILS, SCHEDULES, AND SEQUENCE OF OPERATION

PROJECT TITLE
CASTLE HAYNE MULTI-UNIT OFFICE BUILDING
NEW HANOVER COUNTY, DIVISION 3, NCDOT
5310 BARBADOS BLVD., SUITE 102
CASTLE HAYNE, NORTH CAROLINA 28429
NEW HANOVER COUNTY, NORTH CAROLINA

STATE CONSTRUCTION
ID# 15-12499-02A

ASSET NUMBER:
CO# SITE# BLDG#
71 -

REVISIONS
NO. DATE

DATE ISSUED: 1/9/13
DRAWN BY: WCN
CHECKED BY: LMS

SHEET NO.
M4 OF 4

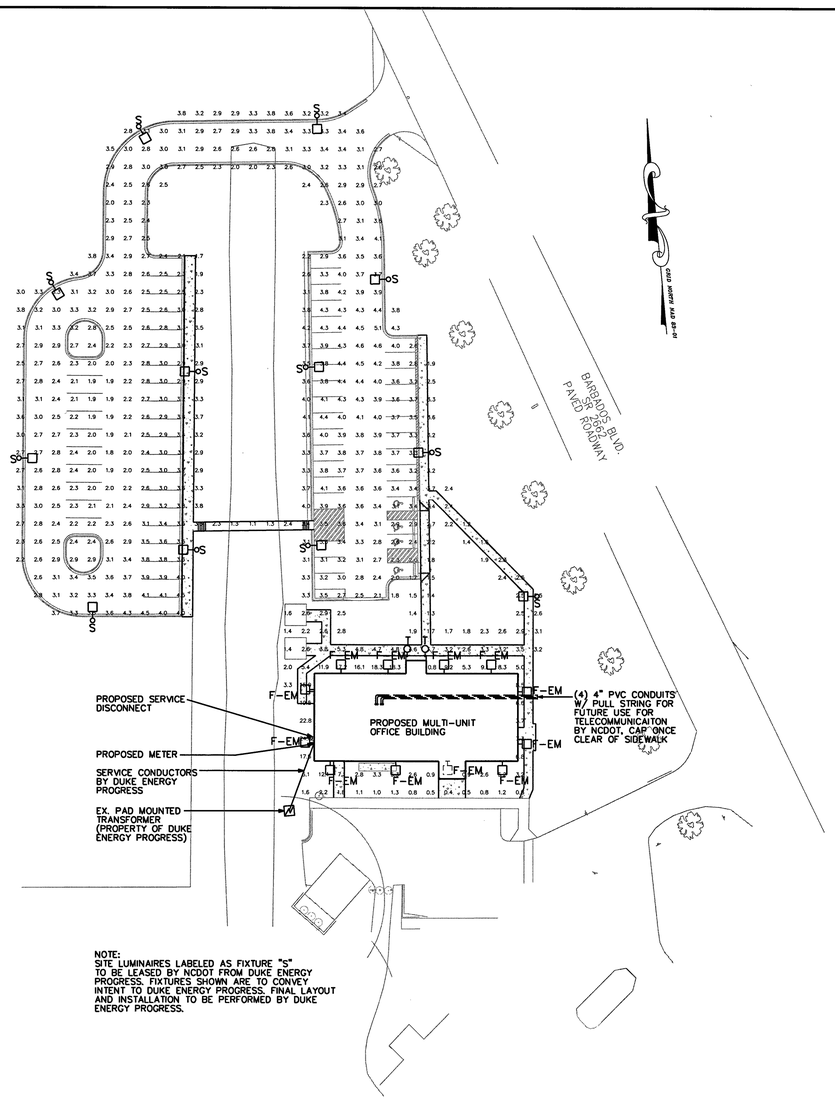

NOTE:
SITE LUMINAIRES LABELED AS FIXTURE "S" TO BE LEASED BY NCDOT FROM DUKE ENERGY PROGRESS. FIXTURES SHOWN ARE TO CONVEY INTENT TO DUKE ENERGY PROGRESS. FINAL LAYOUT AND INSTALLATION TO BE PERFORMED BY DUKE ENERGY PROGRESS.

1 / E1 SITE ELECTRICAL & LIGHTING PLAN
SCALE: 1" = 40'

ELECTRICAL SUMMARY

ELECTRICAL SYSTEM AND EQUIPMENT

Method of Compliance:

Energy Code: ☒ Prescriptive ☐ Performance
ASHRAE 90.1: ☐ Prescriptive ☐ Performance

Lighting schedule (each fixture type)

lamp type required in fixture:	**SEE LUMINAIRE SCHEDULE ON SHEET E4**
number of lamps in fixture:	**SEE LUMINAIRE SCHEDULE ON SHEET E4**
ballast type used in the fixture:	**SEE LUMINAIRE SCHEDULE ON SHEET E4**
number of ballasts in fixture:	**SEE LUMINAIRE SCHEDULE ON SHEET E4**
total wattage per fixture:	**SEE LUMINAIRE SCHEDULE ON SHEET E4**
total interior wattage specified vs. allowed (whole building)	**3,895W VS. 5,045W**
total exterior wattage specified vs. allowed	**2,307W VS. 4,012W**

Additional Prescriptive Compliance

- ☐ 506.2.1 More Efficient Mechanical Equipment
- ☒ 506.2.2 Reduced Lighting Power Density
- ☐ 506.2.3 Energy Recovery Ventilation Systems
- ☐ 506.2.4 Higher Efficiency Service Water Heating
- ☐ 506.2.5 On-Site Supply of Renewable Energy
- ☐ 506.2.6 Automatic Daylighting Control Systems

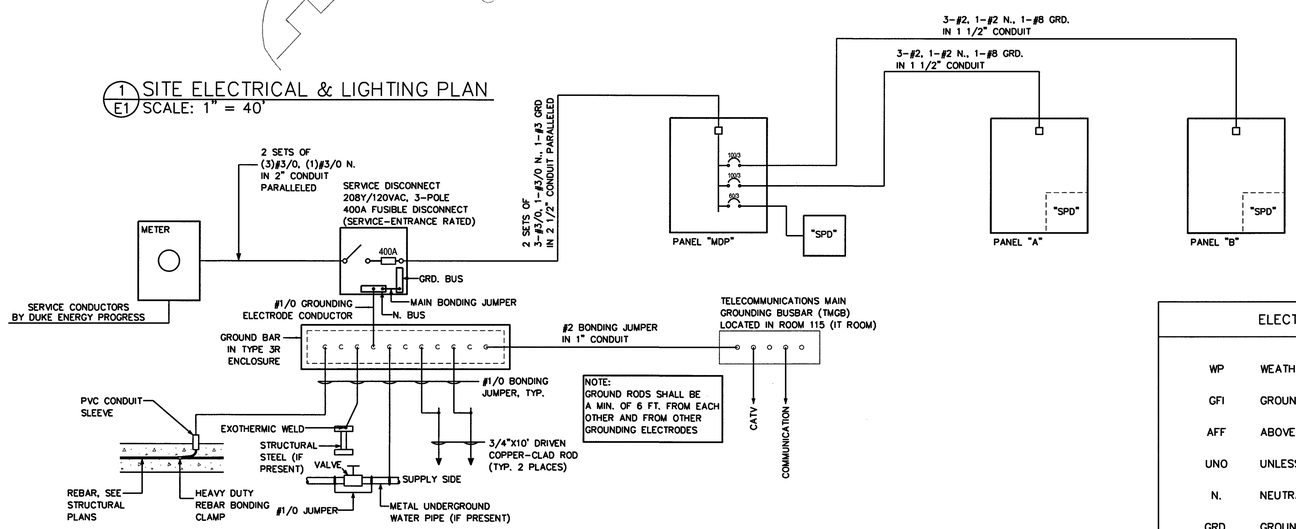

2 / E1 ELECTRICAL RISER
SCALE: NONE

ELECTRICAL SYMBOL LEGEND

A	PANELBOARD
	20A, 125VAC, NEMA 5-20R DUPLEX RECEPTACLE, MOUNTED AT 18" AFF TO TOP OF BOX UNO
	20A, 125VAC, NEMA 5-20R DUPLEX COUNTERTOP RECEPTACLE, MOUNTED AT 46" AFF TO TOP OF BOX UNO
	20A, 125VAC, NEMA 5-20R DUPLEX FLOOR-MOUNTED RECEPTACLE
	SPECIAL PURPOSE RECEPTACLE
	NON-FUSIBLE SAFETY SWITCH
	FUSIBLE SAFETY SWITCH
	EQUIPMENT CONNECTION
A-8	HOMERUN TO PANEL & CIRCUIT NUMBER AS INDICATED
$	SWITCH, SINGLE POLE, 120VAC, MOUNTED AT 46" AFF TO TOP OF OUTLET BOX UNO
$OS	OCCUPANCY SENSOR SWITCH, SINGLE POLE, 120VAC,MOUNTED AT 46" AFF TO TOP OF OUTLET BOX UNO
$3	ACCESSORY SWITCH WIRED FOR THREE-WAY, 120VAC, MOUNTED AT 46" AFF TO TOP OF OUTLET BOX UNO
$3,D,OS	OCCUPANCY SENSOR SWITCH WITH DIMMER WIRED FOR 3-WAY OPERATION, 120VAC,MOUNTED AT 46" AFF TO TOP OF OUTLET BOX UNO
$TS	TIMER SWITCH, SINGLE POLE, INTERMATIC KM2ST-1G OR EQUAL 120VAC, MOUNTED AT 46" AFF TO TOP OF OUTLET BOX UNO
	DUPLEX TELEPHONE/DATA OUTLET, MOUNTED 18" AFF TO TOP OF OUTLET BOX UNO
	SIMPLEX FLOOR-MOUNTED DATA OUTLET
CATV	CABLE TELEVISION OUTLET, MOUNTED AT 74" AFF TO TOP OF OUTLET BOX UNO
CAM	SECURITY CAMERA CEILING BOX
CR	CARD READER BOX, MOUNTED AT 48" AFF TO TOP OF OUTLET BOX UNO
D	DOOR OPERATOR PUSHBUTTON, MOUNTED AT 36" AFF TO TOP OF OUTLET BOX UNO
IM	INTERCOM BOX, MOUNTED AT 46" AFF TO TOP OF OUTLET BOX UNO

ELECTRICAL ABBREVIATIONS

WP	WEATHER-PROOF
GFI	GROUND FAULT INTERUPT
AFF	ABOVE FINISH FLOOR
UNO	UNLESS NOTED OTHERWISE
N.	NEUTRAL
GRD.	GROUND
SPD	SURGE PROTECTIVE DEVICE

PROJECT NO.: P1540-004
DRAWING NO.: 002

STROUD ENGINEERING, P.A.
1078 COMMERCE STREET
WILMINGTON, NC 28403
(252) 756-9352
LICENSE NO. C-0647
L. MICHAEL STROUD, P.E.

DESIGNED BY:

CONSTRUCTION DOCUMENTS

NORTH CAROLINA PROFESSIONAL SEAL PE021990 ENGINEER L. MICHAEL STROUD

SEAL: 1/9/18

SEAL NOT VALID UNLESS SIGNED AND DATED

FACILITIES DESIGN ARCHITECTS & ENGINEERS
FACILITIES MANAGEMENT DIVISION, NCDOT
1 SOUTH WILMINGTON STREET
RALEIGH, NORTH CAROLINA 27601
PHONE:(919) 707-4848 FAX:(919)715-0399

STATE OF NORTH CAROLINA DEPARTMENT OF TRANSPORTATION

CONSULTANT:

DRAWING TITLE / DESCRIPTION:
SITE ELECTRICAL & LIGHTING PLAN & RISER

PROJECT TITLE:
CASTLE HAYNE MULTI-UNIT OFFICE BUILDING
NEW HANOVER COUNTY, DIVISION 3, NCDOT
5310 BARBADOS BLVD., SUITE 102
CASTLE HAYNE, NC 28429
NEW HANOVER COUNTY, NORTH CAROLINA

STATE CONSTRUCTION ID.# 15-12499-02A

ASSET NUMBER:

CO.#	SITE.#	BLDG.#
71 -	-	-

REVISIONS

NO.	DATE

DATE ISSUED: 01/09/18
DRAWN BY: LMS
CHECKED BY: LMS

SHEET NO.
E1 OF 7

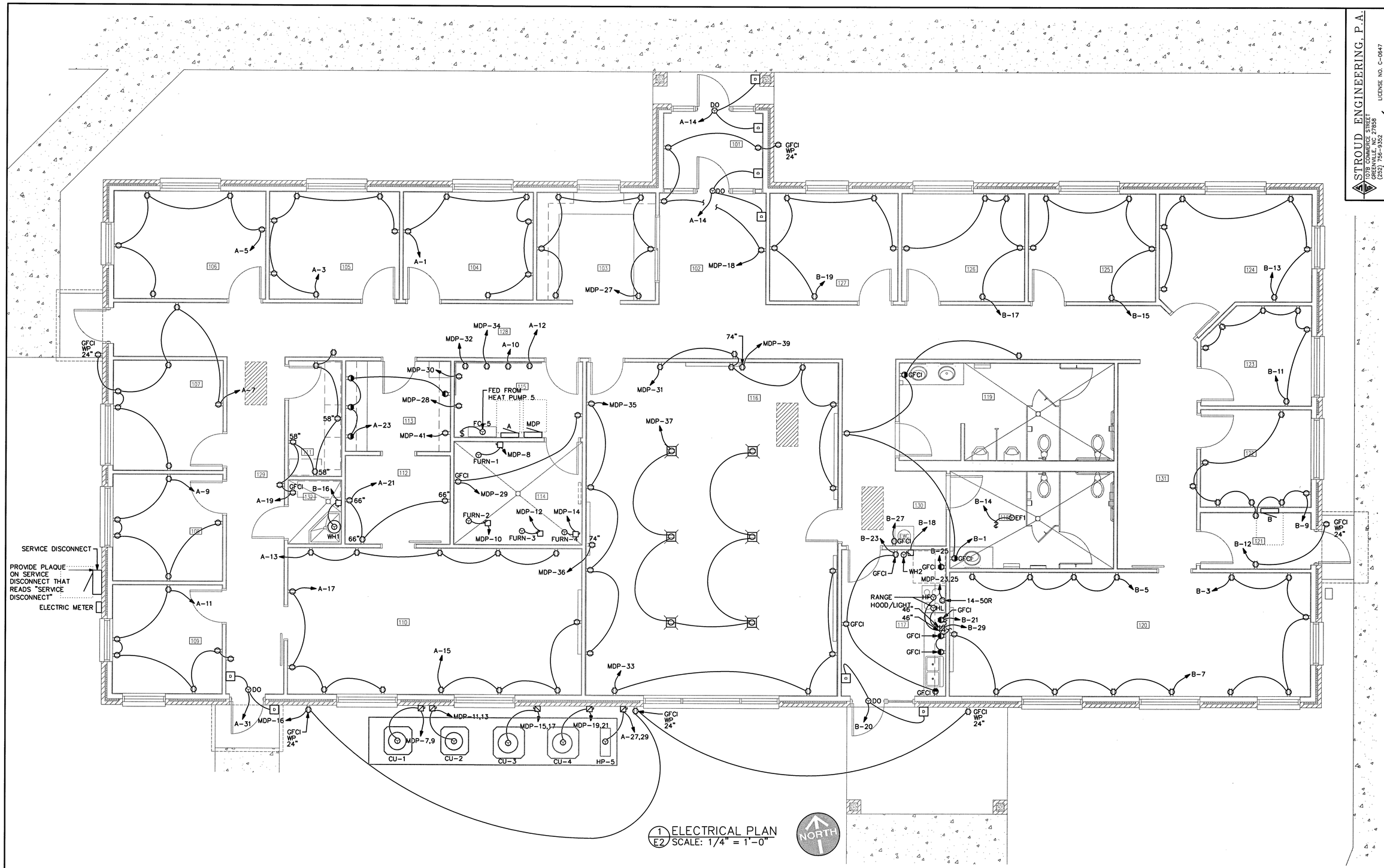

1 ELECTRICAL PLAN
E2 SCALE: 1/4" = 1'-0"

4' 2' 0 4' 8'
GRAPHIC SCALE: 1/4"= 1'-0"

PROJECT NO.: P1540-004
DRAWING NO.: 002

STROUD ENGINEERING, P.A.
7078 COMMERCE STREET
WILMINGTON, NC 28405
(252) 756-9352
LICENSE NO. C-0647
L. MICHAEL STROUD, P.E.

DESIGNED BY:

SEAL: NORTH CAROLINA PROFESSIONAL SEAL PE021990 ENGINEER L. MICHAEL STROUD
SEAL NOT VALID UNLESS SIGNED AND DATED

CONSTRUCTION DOCUMENTS

FACILITIES DESIGN ARCHITECTS & ENGINEERS
FACILITIES MANAGEMENT DIVISION, NCDOT
1 SOUTH WILMINGTON STREET
RALEIGH, NORTH CAROLINA 27601
PHONE:(919)707-4340 FAX:(919)715-0399

STATE OF NORTH CAROLINA DEPARTMENT OF TRANSPORTATION

CONSULTANT:

DRAWING TITLE / DISCRIPTION:

ELECTRICAL PLAN

PROJECT TITLE:
CASTLE HAYNE MULTI-UNIT OFFICE BUILDING
NEW HANOVER COUNTY, DIVISION 3, NCDOT
5310 BARBADOS BLVD., SUITE 102
CASTLE HAYNE, NC 28429
NEW HANOVER COUNTY, NORTH CAROLINA

STATE CONSTRUCTION ID.# 15-12499-02A

ASSET NUMBER:
CO.# SITE.# BLDG.#
71 - . - .

REVISIONS

NO.	DATE

DATE ISSUED: 01/09/18
DRAWN BY: LMS
CHECKED BY: LMS
SHEET NO.
E2 OF 7

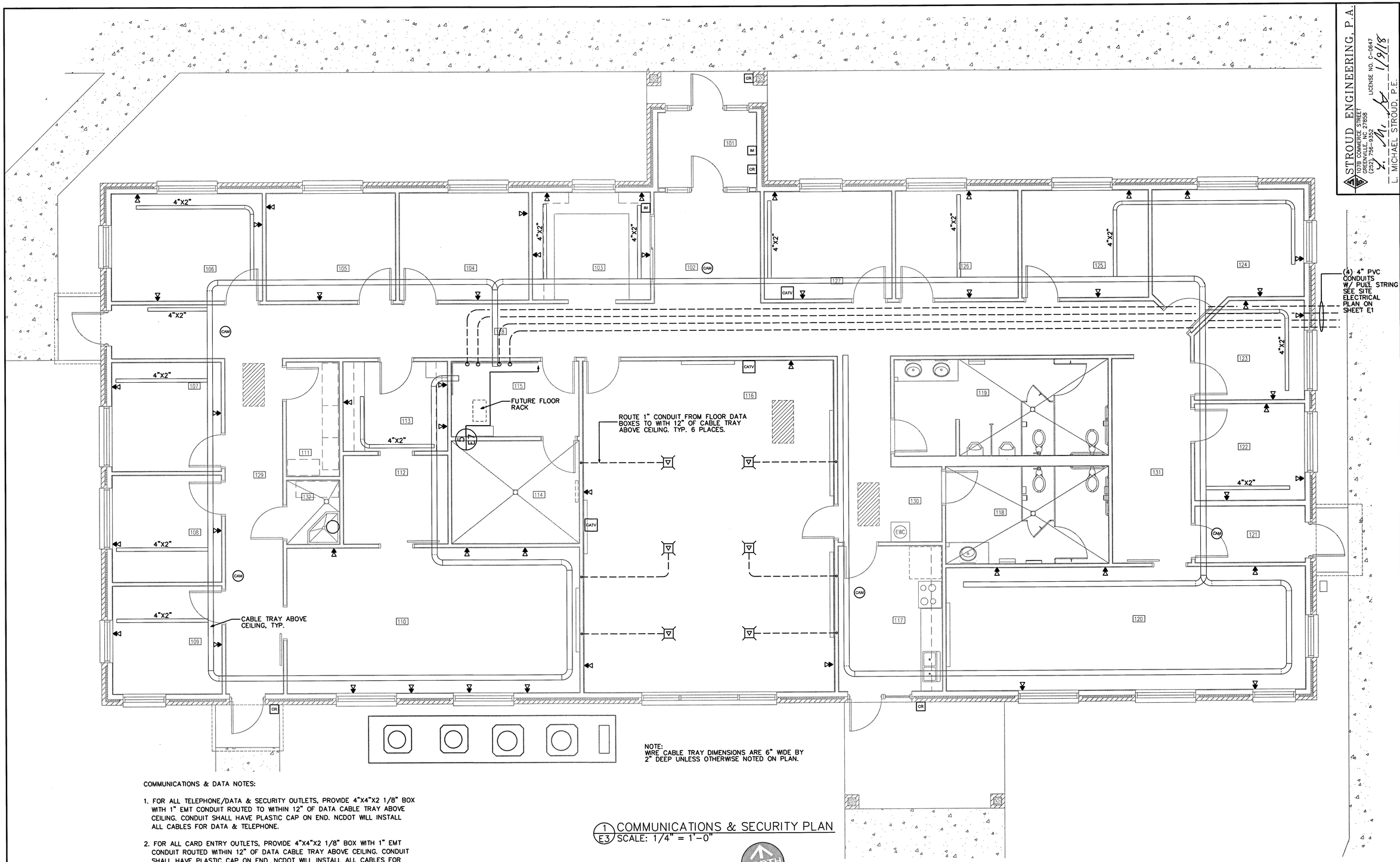

NOTE:
WIRE CABLE TRAY DIMENSIONS ARE 6" WIDE BY 2" DEEP UNLESS OTHERWISE NOTED ON PLAN.

1 / E3 COMMUNICATIONS & SECURITY PLAN
SCALE: 1/4" = 1'-0"

4' 2' 0 4' 8'
GRAPHIC SCALE: 1/4"= 1'-0"

COMMUNICATIONS & DATA NOTES:

1. FOR ALL TELEPHONE/DATA & SECURITY OUTLETS, PROVIDE 4"X4"X2 1/8" BOX WITH 1" EMT CONDUIT ROUTED TO WITHIN 12" OF DATA CABLE TRAY ABOVE CEILING. CONDUIT SHALL HAVE PLASTIC CAP ON END. NCDOT WILL INSTALL ALL CABLES FOR DATA & TELEPHONE.

2. FOR ALL CARD ENTRY OUTLETS, PROVIDE 4"X4"X2 1/8" BOX WITH 1" EMT CONDUIT ROUTED WITHIN 12" OF DATA CABLE TRAY ABOVE CEILING. CONDUIT SHALL HAVE PLASTIC CAP ON END. NCDOT WILL INSTALL ALL CABLES FOR CARD ENTRY SYSTEM.

3. FOR ALL SECURITY CAMERA OUTLETS, PROVIDE 4"X2 1/8" ROUND CEILING BOX WITH 1" EMT CONDUIT STUBBED WITHIN 12" OF DATA CABLE TRAY ABOVE CEILING. CONDUIT SHALL HAVE PLASTIC CAP ON END. NCDOT WILL INSTALL ALL CABLING FOR SECURITY SYSTEM.

4. FOR CABLE TV OUTLETS, PROVIDE 2"X4"X2 1/8" BOX WITH 1" EMT CONDUIT ROUTED WITHIN 12" OF DATA CABLE TRAY ABOVE CEILING. CONDUIT SHALL HAVE PLASTIC CAP ON END. NCDOT WILL INSTALL ALL CABLES FOR CATV.

PROJECT NO.: P1540-004
DRAWING NO.: 002

STROUD ENGINEERING, P.A.
107B COMMERCE STREET
GREENVILLE, NC 27858
(252) 756-9352
LICENSE NO. C-0647
L. MICHAEL STROUD, P.E.

CONSTRUCTION DOCUMENTS

NORTH CAROLINA PROFESSIONAL SEAL PE021990 ENGINEER L. MICHAEL STROUD

SEAL NOT VALID UNLESS SIGNED AND DATED

DESIGNED BY:

FACILITIES DESIGN
ARCHITECTS & ENGINEERS
FACILITIES MANAGEMENT DIVISION, NCDOT
1 SOUTH WILMINGTON STREET
RALEIGH, NORTH CAROLINA 27601
PHONE:919/707-4540 FAX:919/715-0399

STATE OF NORTH CAROLINA DEPARTMENT OF TRANSPORTATION

CONSULTANT:

DRAWING TITLE / DISCRIPTION:
COMMUNICATIONS & SECURITY PLAN

PROJECT TITLE:
CASTLE HAYNE MULTI-UNIT OFFICE BUILDING
NEW HANOVER COUNTY, DIVISION 3, NCDOT
5310 BARBADOS BLVD., SUITE 102
CASTLE HAYNE, NC 28429
NEW HANOVER COUNTY, NORTH CAROLINA

STATE CONSTRUCTION
ID.# 15-12499-02A

ASSET NUMBER:

CO.#	SITE.#	BLDG.#
71 -	-	-

REVISIONS

NO.	DATE

DATE ISSUED: 01/09/18
DRAWN BY: LMS
CHECKED BY: LMS

SHEET NO.
E3 OF 7

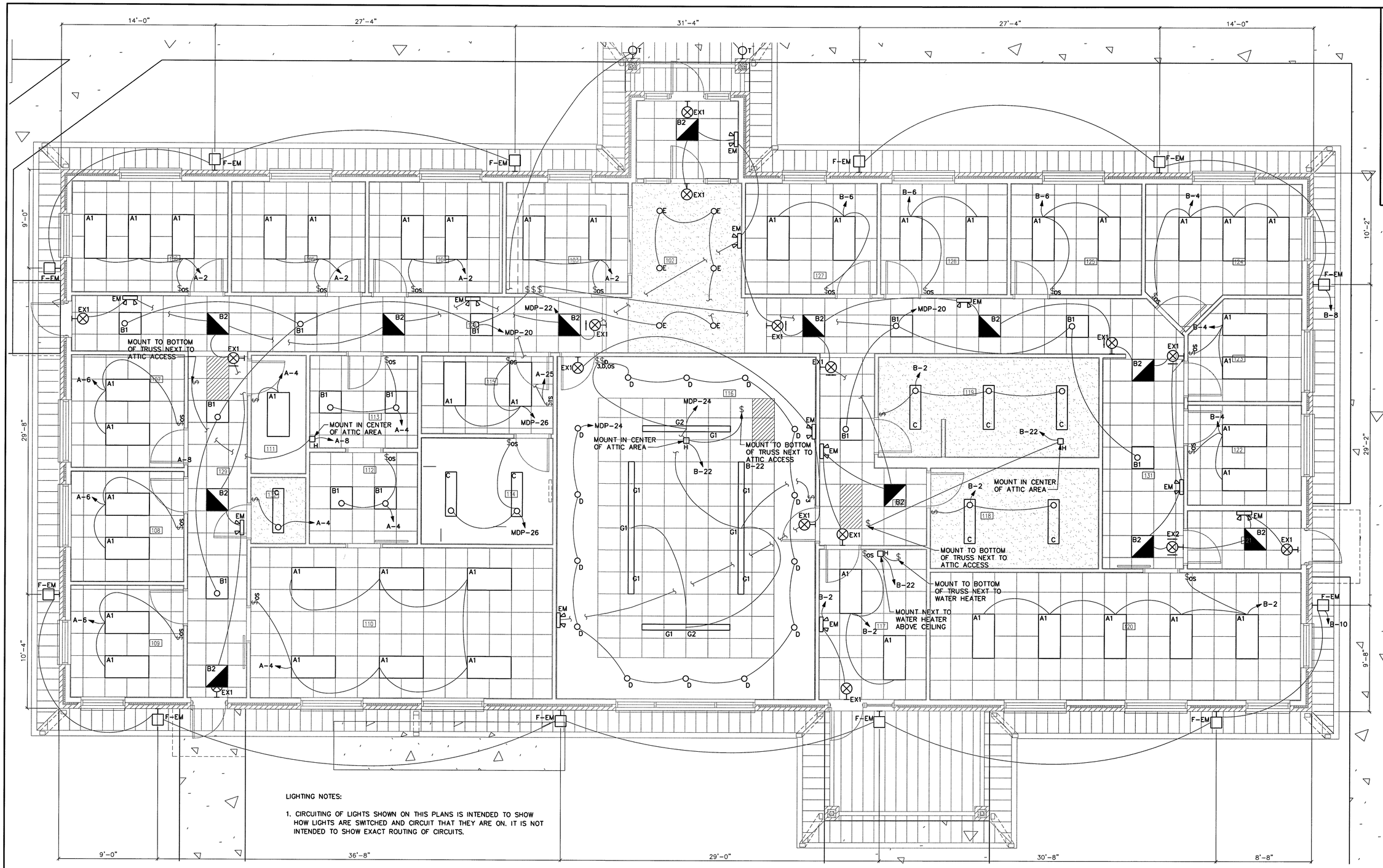

LIGHTING NOTES:

1. CIRCUITING OF LIGHTS SHOWN ON THIS PLANS IS INTENDED TO SHOW HOW LIGHTS ARE SWITCHED AND CIRCUIT THAT THEY ARE ON. IT IS NOT INTENDED TO SHOW EXACT ROUTING OF CIRCUITS.

1 / E4 LIGHTING PLAN
SCALE: 1/4" = 1'-0"

4' 2' 0 4' 8'
GRAPHIC SCALE: 1/4"= 1'-0"

PROJECT NO.: P1540-004
DRAWING NO.: 002

STROUD ENGINEERING, P.A.
107B COMMERCE STREET
WILMINGTON, NORTH CAROLINA 28403
(252) 756-0352
LICENSE NO. C-0847
L. MICHAEL STROUD, P.E.

DESIGNED BY:

CONSULTANT:

CONSTRUCTION DOCUMENTS

NORTH CAROLINA PROFESSIONAL ENGINEER SEAL L. MICHAEL STROUD PE021990

SEAL: 1/9/18

SEAL NOT VALID UNLESS SIGNED AND DATED

FACILITIES DESIGN ARCHITECTS & ENGINEERS
FACILITIES MANAGEMENT DIVISION, NCDOT
1 SOUTH WILMINGTON STREET
RALEIGH, NORTH CAROLINA 27601
PHONE:919/707-4540 FAX:919/715-0399

STATE OF NORTH CAROLINA DEPARTMENT OF TRANSPORTATION

DRAWING TITLE / DESCRIPTION:

LIGHTING PLAN

PROJECT TITLE:
CASTLE HAYNE MULTI-UNIT OFFICE BUILDING
NEW HANOVER COUNTY, DIVISION 3, NCDOT
5310 BARBADOS BLVD., SUITE 102
CASTLE HAYNE, NC 28429
NEW HANOVER COUNTY, NORTH CAROLINA

STATE CONSTRUCTION ID.# 15-12499-02A

ASSET NUMBER:

CO.#	SITE.#	BLDG.#
71	-	-

REVISIONS

NO.	DATE

DATE ISSUED: 01/09/18
DRAWN BY: LMS
CHECKED BY: LMS
SHEET NO.

E4 OF 7

LUMINAIRE SCHEDULE

CALLOUT	DESCRIPTION	MODEL 1	MODEL 2	MODEL 3	INPUT WATTS	VOLTS	CCT	NOTE 1
A1	2X4 LED TROFFER	METALUX 24AC-LD4-55-UNV-L835-CD1-U	EQUAL BY LITHONIA	EQUAL BY LIGHTOLIER	53.8	120V 1P 2W	3500K	
B1	2X2 LED TROFFER	METALUX 22AC-LD4-23-UNV-L835-CD1-U	EQUAL BY LITHONIA	EQUAL BY LIGHTOLIER	22.6	120V 1P 2W	3500K	
B2	2X2 LED TROFFER	METALUX 22AC-LD4-23-UNV-L835-CD1-U	EQUAL BY LITHONIA	EQUAL BY LIGHTOLIER	22.6	120V 1P 2W	3500K	
C	4 FT SURFACE MOUNT WRAP AROUND	METALUX 4WNLED-LD4-40SL-F-UNV-L840-CD1-U	EQUAL BY LITHONIA	EQUAL BY LIGHTOLIER	36.1	120V 1P 2W	3500K	
D	SURFACE MOUNT DOWNLIGHT	KICHLER 43855WHLED30T	EQUAL BY COOPER LIGHTING	EQUAL BY LIGHTOLIER	12.3	120V 1P 2W	3500K	
E	6 INCH RECESSED CAN	HALO PD6V120-60VC_16PAR38LED	EQUAL BY LITHONIA	EQUAL BY H.E. WILLIAMS	15.1	120V 1P 2W	3500K	OPEN DOWN LIGHT, VERTICAL LAMP, SPECULAR CLEAR TRIM.
EM	LED EMERGENCY LIGHT	SURE-LITES SEL50	EQUAL BY LITHONIA	EQUAL BY H.E. WILLIAMS	2.3	120V 1P 2W		
EX1	WALL-MOUNT EXIT LIGHT (SINGLE FACE)	SURELITE CX71	EQUAL BY LITHONIA	EQUAL BY H.E. WILLIAMS	1	120V 1P 2W		
EX2	WALL-MOUNT EXIT LIGHT (DOUBLE FACE)	SURELITE CX72	EQUAL BY LITHONIA	EQUAL BY H.E. WILLIAMS	1	120V 1P 2W		
F-EM	LED WALPAK - FULL CUTOFF W/ EMERGENCY BATTERY BACKUP	LUMARK LDWP-FC-4B-120-PE-EMLED-CD	EQUAL BY LITHONIA		31.9	120V 1P 2W		PROVIDE PHOTO CONTROL & LED BATTERY BACKUP FOR COLD TEMPERATURE. MOUNT SUCH THAT CENTER OF FIXTURE IS 10 FT. ABOVE FINISHED FLOOR ELEVATION.
G1	12 FT. LINEAR LED FIXTURE	CORELITE 12-WS-3L35-1D-UNV-AC48-T1-12-STD--W	EQUAL BY GE LIGHTING		122.7	120V 1P 2W	3500K	
G2	8 FT. LINEAR LED FIXTURE	CORELITE 12-WS-3L35-1D-UNV-AC48-T1-8-STD--W	EQUAL BY GE LIGHTING		81.8	120V 1P 2W	3500K	
H	ATTIC LIGHT	WF HARRIS 30-LED K6-HK-120	EQUAL BY HUBBELL		40	120V 1P 2W		
S	AREA LUMINAIRE	PROVIDED BY DUKE ENERGY PROGRESS (EQUAL TO LUMARK PRV-A60-D-UNV-T3-AP)			163	MULTIPLE		NCDOT TO LEASE SITE LIGHTS FROM DUKE ENERGY PROGRESS. LIGHTS SHOWN ON SITE ELECTRICAL PLAN ON SHEET E1 ARE TO CONVEY INTENT TO DUKE ENERGY PROGRESS. FINAL LAYOUT OF SITE LIGHTING TO BE PREPARED AND INSTALLED BY DUKE ENERGY PROGRESS. MOUNT 30 FT. STEEL POLE & PROVIDE PHOTOCELL. LAMPS ARE (2) 70 CRI, 4000K LEDS, HIGH OUTPUT & TYPE III OPTICS.
T	EXTERIOR DECORATIVE WALL SCONCE	SHAPER 674-31-WP-L3827-120-ALP	EQUAL BY LITHONIA		19	120V 1P 2W		LISTED FOR WET LOCATION

INDOOR LIGHTING LEVELS

ROOM NUMBER	ROOM TYPE	FC DESIRED	FC ACTUAL	RCR	CU (1)	WATTS/SF	AREA	TOTAL WATTS
101	LOBBY - MAIN ENTRY	15	12.97	8.12	0.63	0.4	65	26
102	LOBBY - MAIN ENTRY	15	19.52	5.39	0.3	0.6	157	94
103	OFFICE	50	43.97	6.18	0.94	0.97	111	108
104	OFFICE	50	41.13	5.91	0.96	0.88	122	108
105	OFFICE	50	41.13	5.91	0.96	0.88	122	108
106	OFFICE	50	54.97	5.53	1	1.13	142	161
107	OFFICE	50	45.91	6.37	0.92	1.03	104	108
108	OFFICE	50	46.7	6.45	0.91	1.06	102	108
109	OFFICE	50	46.17	6.39	0.92	1.04	103	108
110	OFFICE	50	52.38	3.57	1.25	0.86	373	323
111	STORAGE	30	38.46	8.17	0.78	1.02	53	54
112	STORAGE	30	25.42	6.18	0.75	0.57	80	45
113	STORAGE	30	22.4	7.19	0.68	0.55	82	45
114	ELEC / MECH	40	37.09	6.1	0.82	0.63	115	72
115	IT	50	57.94	6.23	0.93	1.29	84	108
116	MEETING	40	50.13	2.43	0.66	1.58	730	1152
117	KITCHEN	40	38.68	5.74	0.98	0.84	132	111
118	RESTROOMS	30	33.21	5.72	0.88	0.52	138	72
119	RESTROOMS	30	40.21	5.23	0.93	0.6	181	108
120	OFFICE	50	40.91	3.79	1.22	0.69	388	269
121	CORRIDORS	10	10.76	9.19	0.44	0.47	55	26
122	OFFICE	50	49.69	6.77	0.88	1.16	93	108
123	OFFICE	50	51.24	6.7	0.89	1.19	90	108
124	OFFICE	50	51.49	5.39	1.02	1.05	154	161
125	OFFICE	50	41.75	5.97	0.96	0.9	119	108
126	OFFICE	50	42.83	6.07	0.95	0.93	115	108
127	OFFICE	50	41.54	5.95	0.96	0.9	120	108
128	CORRIDORS	10	17.1	7.12	0.54	0.56	254	142
129	CORRIDORS	10	17.24	7.1	0.54	0.56	168	95
130	CORRIDORS	10	11.82	7.4	0.52	0.42	119	50
131	CORRIDORS	10	16.33	6.31	0.58	0.49	338	167
132	STORAGE	50	44.34	12.06	0.5	1.23	29	36

TOTAL WATTS: 4500
(1) CU includes average coefficients of utilization and all maintenance factors

PROJECT NO.: P1540-004
DRAWING NO.: 00?

STROUD ENGINEERING, P.A.
1078 COMMERCE STREET
GREENVILLE, NC 27858
(252) 756-9352
LICENSE NO. C-0647
L. MICHAEL STROUD, P.E.

SEAL: 1/9/18
NORTH CAROLINA PROFESSIONAL SEAL PE021990 ENGINEER L. MICHAEL STROUD
SEAL NOT VALID UNLESS SIGNED AND DATED

CONSTRUCTION DOCUMENTS

DESIGNED BY:

FACILITIES DESIGN ARCHITECTS & ENGINEERS
FACILITIES MANAGEMENT DIVISION, NCDOT
1 SOUTH WILMINGTON STREET
RALEIGH, NORTH CAROLINA 27601
PHONE:919/707-4540 FAX:919/715-0399

STATE OF NORTH CAROLINA DEPARTMENT OF TRANSPORTATION

CONSULTANT:

DRAWING TITLE / DISCRIPTION:
ELECTRICAL SCHEDULES

PROJECT TITLE:
CASTLE HAYNE MULTI-UNIT OFFICE BUILDING
NEW HANOVER COUNTY, DIVISION 3, NCDOT
5310 BARBADOS BLVD., SUITE 102
CASTLE HAYNE, NC 28429
NEW HANOVER COUNTY, NORTH CAROLINA

STATE CONSTRUCTION ID.# 15-12499-02A

ASSET NUMBER:
CO.# SITE.# BLDG.#
71 - . - .

REVISIONS
NO. DATE

DATE ISSUED:01/09/18
DRAWN BY: LMS
CHECKED BY: LMS

SHEET NO.
E5 OF 7

MDP

ROOM
MOUNTING SURFACE
FED FROM SERVICE DISCONNECT
NOTE

VOLTS 208Y/120V 3P 4W
BUS AMPS 400
NEUTRAL 100%

AIC 22,000
MAIN BKR MLO
LUGS DOUBLE

CKT #	CKT BKR	LOAD KVA	CIRCUIT DESCRIPTION		CKT #	CKT BKR	LOAD KVA	CIRCUIT DESCRIPTION
1	100/3	20.3	PANEL A	a	2	100/3	18.8	PANEL B
3	|			b	4	|		
5	|			c	6	|		
7	50/2	3.33	CU-1	a	8	20/1	1.64	FURN-1
9	|			b	10	20/1	1.02	FURN-2
11	50/2	3.33	CU-2	c	12	20/1	1.02	FURN-3
13	|			a	14	20/1	1.02	FURN-4
15	50/2	4.68	CU-3	b	16	20/1	0.54	SOUTH SIDE OUTDOOR RECEPTACLE
17	|			c	18	20/1	0.9	FRONT VESTIBULE & LOBBY RECEPTACLE
19	50/2	4.68	CU-4	a	20	20/1	0.3	CORRIDOR LIGHTING
21	|			b	22	20/1	0.299	CORRIIDOR NIGHT, EXIT, & EMER. LIGHTING
23	60/2	12	RANGE	c	24	20/1	0.588	ROOM 116 LIGHTING
25	|			a	26	20/1	0.18	ROOMS 114-115 LIGHTING
27	20/1	1.08	ROOM 103 RECEPTACLE	b	28	20/1	1.92	IT EQUIPMENT
29	20/1	0.36	ROOMS 114-115 RECEPTACLE	c	30	20/1	1.92	IT EQUIPMENT
31	20/1	0.9	ROOM 116 RECEPTACLE	a	32	20/1	1.92	IT EQUIPMENT
33	20/1	0.72	ROOM 116 RECEPTACLE	b	34	20/1	1.92	IT EQUIPMENT
35	20/1	0.72	ROOM 116 RECEPTACLE	c	36	20/1	0.18	RECEPTACLE
37	20/1	1.08	ROOM 116 FLOOR RECEPTACLE	a	38	60/3	0.01	SURGE PROTECTOR
39	20/1	0.18	ROOM 116 TELEVISION RECEPTACLE	b	40	|		
41	20/1	1.92	COPIER	c	42	|		

	CONN KVA	CALC KVA			CONN KVA	CALC KVA	
LIGHTING	4.55	5.68	(125%)	CONTINUOUS	17.3	21.6	(125%)
LARGEST MOTOR	4.41	1.1	(25%)	HEATING	6.82	0	(0%)
OTHER MOTORS	2.8	2.8	(100%)	COOLING	22.8	22.8	(100%)
RECEPTACLES	28.8	19.4	(50%>10)	NONCONTINUOUS	0	0	(100%)
KITCHEN EQUIP	13.2	13.2	(100%)	DIVERSE	0	0	(N/A)
CUSTOM LOAD	0.03	0	(0%)	METERED DEMAND	0	0	(125%)
				TOTAL KVA	89.5	86.6	
				BALANCED 3-PHASE AMPS		240	

PHASE BALANCE PERCENT: PHASE A 107% PHASE B 91.6% PHASE C 101%

A

ROOM
MOUNTING SURFACE
FED FROM MDP
NOTE

VOLTS 208Y/120V 3P 4W
BUS AMPS 100
NEUTRAL 100%

AIC 22,000
MAIN BKR 100
LUGS STANDARD

CKT #	CKT BKR	LOAD KVA	CIRCUIT DESCRIPTION		CKT #	CKT BKR	LOAD KVA	CIRCUIT DESCRIPTION
1	20/1	1.08	ROOM 104 RECEPTACLE	a	2	20/1	0.484	ROOMS 103-106 LIGHTING
3	20/1	1.08	ROOM 105 RECEPTACLE	b	4	20/1	0.503	ROOMS 110-113 LIGHTING
5	20/1	0.9	ROOM 106 RECEPTACLE	c	6	20/1	0.323	ROOMS 107-109 LIGHTING
7	20/1	1.26	ROOM 107 RECEPTACLE	a	8	20/1	0.04	LIGHTING
9	20/1	0.9	ROOM 108 RECEPTACLE	b	10	20/1	1.92	IT EQUIPMENT
11	20/1	1.08	ROOM 109 RECEPTACLE	c	12	20/1	1.92	IT EQUIPMENT
13	20/1	0.9	ROOM 110 RECEPTACLE	a	14	20/1	1.2	DOOR OPERATOR
15	20/1	0.72	ROOM 110 RECEPTACLE	b	16	20/1	0	SPACE
17	20/1	0.72	ROOM 110 RECEPTACLE	c	18	20/1	0	SPACE
19	20/1	1.26	ROOM 111 & WEST CORRIDOR RECEPTACLE	a	20	20/1	0	SPACE
21	20/1	0.54	ROOM 112 RECEPTACLE	b	22	20/1	0	SPACE
23	20/1	0.72	ROOM 113 RECEPTACLE	c	24	20/1	0	SPACE
25	20/1	0.038	FRONT ENTRANCE SCONCES LIGHTING	a	26	20/1	0	SPACE
27	20/2	2.11	DUCTLESS UNIT (HP-5)	b	28	20/1	0	SPACE
29	|			c	30	20/1	0	SPACE
31	20/1	0.6	DOOR OPERATOR	a	32	20/1	0	SPACE
33	20/1	0	SPACE	b	34	20/1	0	SPACE
35	20/1	0	SPACE	c	36	20/1	0	SPACE
37	20/1	0	SPACE	a	38	30/3	0.01	SURGE PROTECTOR
39	20/1	0	SPACE	b	40	|		
41	20/1	0	SPACE	c	42	|		

	CONN KVA	CALC KVA			CONN KVA	CALC KVA	
LIGHTING	1.39	1.74	(125%)	CONTINUOUS	3.84	4.8	(125%)
LARGEST MOTOR	1.79	0.447	(25%)	HEATING	2.11	2.11	(100%)
OTHER MOTORS	1.8	1.8	(100%)	COOLING	2.11	0	(0%)
RECEPTACLES	11.2	10.6	(50%>10)	NONCONTINUOUS	0	0	(100%)
KITCHEN EQUIP	0	0	(N/A)	DIVERSE	0	0	(N/A)
CUSTOM LOAD	0.01	0	(0%)	METERED DEMAND	0	0	(125%)
				TOTAL KVA	20.3	21.5	
				BALANCED 3-PHASE AMPS		59.6	

PHASE BALANCE PERCENT: PHASE A 101% PHASE B 99.4% PHASE C 99.4%

B

ROOM
MOUNTING FLUSH
FED FROM MDP
NOTE

VOLTS 208Y/120V 3P 4W
BUS AMPS 100
NEUTRAL 100%

AIC 22,000
MAIN BKR MLO
LUGS STANDARD

CKT #	CKT BKR	LOAD KVA	CIRCUIT DESCRIPTION		CKT #	CKT BKR	LOAD KVA	CIRCUIT DESCRIPTION
1	20/1	0.72	BATHROOMS & CORRIDOR RECEPTACLE	a	2	20/1	0.56	ROOMS 117-120 LIGHTING
3	20/1	0.9	ROOM 120 RECEPTACLE	b	4	20/1	0.377	ROOMS 122-124 LIGHTING
5	20/1	0.72	ROOM 120 RECEPTACLE	c	6	20/1	0.323	ROOMS 125-127 LIGHTING
7	20/1	0.9	ROOM 120 RECEPTACLE	a	8	20/1	0.191	FRONT EXTERIOR LIGHTING
9	20/1	1.44	ROOM 122 & EAST CORRIDOR RECEPTACLE	b	10	20/1	0.16	REAR EXTERIOR LIGHTING
11	20/1	1.08	ROOM 123 RECEPTACLE	c	12	20/1	0.36	EAST VESTIBULE RECEPTACLE
13	20/1	1.08	ROOM 124 RECEPTACLE	a	14	20/1	0.224	EF1
15	20/1	0.9	ROOM 125 RECEPTACLE	b	16	20/1	1.65	WH1
17	20/1	0.9	ROOM 126 RECEPTACLE	c	18	20/1	1.65	WH2
19	20/1	0.9	ROOM 127 RECEPTACLE	a	20	20/1	0.6	DOOR OPERATOR
21	20/1	0.54	BREAK ROOM RECEPTACLE	b	22	20/1	0.12	LIGHTING
23	20/1	0.54	BREAK ROOM RECEPTACLE	c	24	20/1	0	SPACE
25	20/1	1.2	REFRIGERATOR	a	26	20/1	0	SPACE
27	20/1	0.528	WATER COOLER	b	28	20/1	0	SPACE
29	20/1	0.24	HOOD FAN/LIGHT	c	30	20/1	0	SPACE
31	20/1	0	SPACE	a	32	20/1	0	SPACE
33	20/1	0	SPACE	b	34	20/1	0	SPACE
35	20/1	0	SPACE	c	36	20/1	0	SPACE
37	20/1	0	SPACE	a	38	30/3	0.01	SURGE PROTECTOR
39	20/1	0	SPACE	b	40	|		
41	20/1	0	SPACE	c	42	|		

	CONN KVA	CALC KVA			CONN KVA	CALC KVA	
LIGHTING	1.79	2.24	(125%)	CONTINUOUS	3.83	4.79	(125%)
LARGEST MOTOR	0.6	0.75	(125%)	HEATING	0	0	(N/A)
OTHER MOTORS	0.404	0.404	(100%)	COOLING	0	0	(N/A)
RECEPTACLES	11	10.5	(50%>10)	NONCONTINUOUS	0	0	(100%)
KITCHEN EQUIP	1.2	1.2	(100%)	DIVERSE	0	0	(N/A)
CUSTOM LOAD	0.01	0	(0%)	METERED DEMAND	0	0	(125%)
				TOTAL KVA	18.8	19.9	
				BALANCED 3-PHASE AMPS		55.1	

PHASE BALANCE PERCENT: PHASE A 102% PHASE B 106% PHASE C 92.7%

EQUIPMENT CONNECTION SCHEDULE

CALLOUT	DESCRIPTION	SYMBOL	VOLTS	AMPS	BREAKER	WIRE CALLOUT	DISCONNECT	DISCONNECT FUSE SIZE	DISCONNECT FUSE TYPE	NOTE 1
CU-1	CONDENSING UNIT 1		208V 2P 2W	16	50/2	3/4"C,2#6,#10G	FUSED	35	RK5	
CU-2	CONDENSING UNIT 2		208V 2P 2W	16	50/2	3/4"C,2#6,#10G	FUSED	35	RK5	
CU-3	CONDENSING UNIT 3		208V 2P 2W	22.5	50/2	3/4"C,2#6,#10G	FUSED	40	RK5	
CU-4	CONDENSING UNIT 4		208V 2P 2W	22.5	50/2	3/4"C,2#6,#10G	FUSED	40	RK5	
DO	DOOR OPERATOR		120V 1P 2W	5	20/1	1/2"C,1#12,#12N,#12G	HARDWIRED CONNECTION			PROVIDE LOCK-OFF MECHANISM ON BREAKER IN PANEL
EF1	BATHROOM EXHAUST FAN		120V 1P 2W	1.9	20/1	1/2"C,1#12,#12N,#12G	TOGGLE SWITCH			
FC-5	DUCTLESS FAN COIL 5		208V 2P 2W	1			TOGGLE SWITCH			POWER FED FROM OUTDOOR UNIT
FURN-1	FURNACE 1		120V 1P 2W	13.7	20/1	1/2"C,1#12,#12N,#12G	NON-FUSED			
FURN-2	FURNACE 2		120V 1P 2W	8.5	20/1	1/2"C,1#12,#12N,#12G	NON-FUSED			
FURN-3	FURNACE 3		120V 1P 2W	8.5	20/1	1/2"C,1#12,#12N,#12G	NON-FUSED			
FURN-4	FURNACE 4		120V 1P 2W	8.5	20/1	1/2"C,1#12,#12N,#12G	NON-FUSED			
HP-5	DUCTLESS HEAT PUMP 5		208V 2P 2W	10.2	20/2	1/2"C,2#12,#12G	FUSED	15	RK5	
WH1	WATER HEATER (JANITOR'S CLOSET)		120V 1P 2W	13.8	20/1	1/2"C,1#12,#12N,#12G	NON-FUSED			
WH2	WATER HEATER (KITCHEN)		120V 1P 2W	13.8	20/1	1/2"C,1#12,#12N,#12G	NON-FUSED			LOCATED ABOVE CEILING

PROJECT NO.: P1540-004
DRAWING NO.: 00?

STROUD ENGINEERING, P.A.
1078 COMMERCE STREET
GREENVILLE, NC 27858
(252) 756-3352
LICENSE NO. C-0647
L. MICHAEL STROUD, P.E.
DESIGNED BY:

CONSTRUCTION DOCUMENTS

NORTH CAROLINA PROFESSIONAL SEAL PE021990 ENGINEER L. MICHAEL STROUD
SEAL: 1/9/18
SEAL NOT VALID UNLESS SIGNED AND DATED

FACILITIES DESIGN
ARCHITECTS & ENGINEERS
FACILITIES MANAGEMENT DIVISION, NCDOT
1 SOUTH WILMINGTON STREET
RALEIGH, NORTH CAROLINA 27601
PHONE:919/707-4540 FAX:919/715-0399

STATE OF NORTH CAROLINA DEPARTMENT OF TRANSPORTATION

CONSULTANT:

DRAWING TITLE / DISCRIPTION: PANEL SCHEDULES

PROJECT TITLE:
CASTLE HAYNE MULTI-UNIT OFFICE BUILDING
NEW HANOVER COUNTY, DIVISION 3, NCDOT
5310 BARBADOS BLVD., SUITE 102
CASTLE HAYNE, NC 28429
NEW HANOVER COUNTY, NORTH CAROLINA

STATE CONSTRUCTION
ID.# 15-12499-02A

ASSET NUMBER:
CO.# SITE.# BLDG.#
71 - . - .

REVISIONS

NO.	DATE

DATE ISSUED:01/09/18
DRAWN BY: LMS
CHECKED BY: LMS
SHEET NO.
E6 OF 7

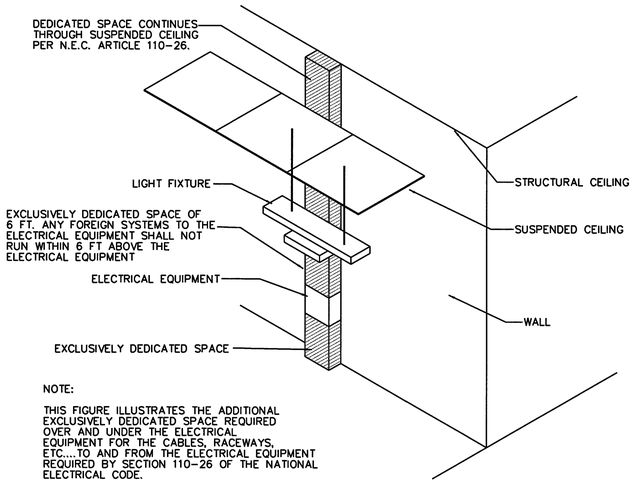

NOTE:

THIS FIGURE ILLUSTRATES THE ADDITIONAL EXCLUSIVELY DEDICATED SPACE REQUIRED OVER AND UNDER THE ELECTRICAL EQUIPMENT FOR THE CABLES, RACEWAYS, ETC....TO AND FROM THE ELECTRICAL EQUIPMENT REQUIRED BY SECTION 110-26 OF THE NATIONAL ELECTRICAL CODE.

1 / E7 DEDICATED SPACE FOR ELECTRICAL EQUIPMENT
SCALE: NONE

WHERE THE "CONDITIONS" ARE AS FOLLOWS:

1. EXPOSED LIVE PARTS ON ONE SIDE AND NO LIVE OR GROUNDED PARTS ON THE OTHER SIDE OF THE WORKING SPACE, OR EXPOSED LIVE PARTS ON BOTH SIDES EFFECTIVELY GUARDED BY SUITABLE WOOD OR OTHER INSULATING MATERIALS. INSULATED WIRE OR INSULATED BUSBARS OPERATING AT NOT OVER 300V SHALL NOT BE CONSIDERED LIVE PARTS.
2. EXPOSED LIVE PARTS ON ONE SIDE AND GROUNDED PARTS ON THE OTHER SIDE.
3. EXPOSED LIVE PARTS ON BOTH SIDES OF THE WORK SPACE (NOT GUARDED AS PROVIDED IN CONDITION 1) WITH THE OPERATOR BETWEEN.

TABLE "A" WORKING CLEARANCES

VOLTAGE TO GROUNDED NOMINAL	MINIMUM CLEAR DISTANCE (FEET)		
	CONDITION: 1	2	3
0 – 150	3	3	3
151 – 600	3	3.5	4

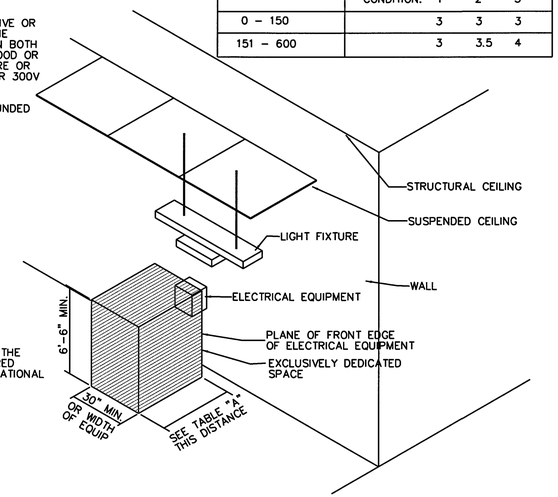

NOTE:

THIS FIGURE ILLUSTRATES THE WORKING SPACE IN FRONT OF THE ELECTRICAL EQUIPMENT REQUIRED BY SECTION 110-26 OF THE NATIONAL ELECTRICAL CODE.

2 / E7 WORKING CLEARANCE FOR ELECTRICAL EQUIPMENT
SCALE: NONE

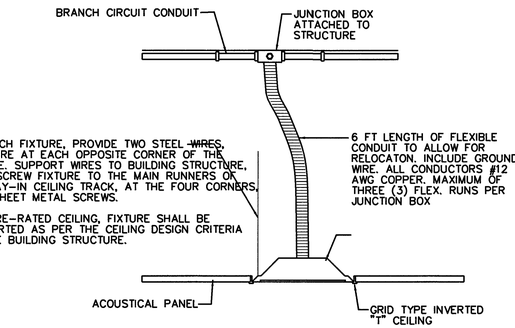

1. FOR EACH FIXTURE, PROVIDE TWO STEEL ~~WIRES~~. ONE WIRE AT EACH OPPOSITE CORNER OF THE FIXTURE. SUPPORT WIRES TO BUILDING STRUCTURE, THEN SCREW FIXTURE TO THE MAIN RUNNERS OR THE LAY-IN CEILING TRACK, AT THE FOUR CORNERS, WITH SHEET METAL SCREWS.
2. FOR FIRE-RATED CEILING, FIXTURE SHALL BE SUPPORTED AS PER THE CEILING DESIGN CRITERIA TO THE BUILDING STRUCTURE.

3 / E7 LIGHTING FIXTURE MOUNTING DETAIL
SCALE: NONE

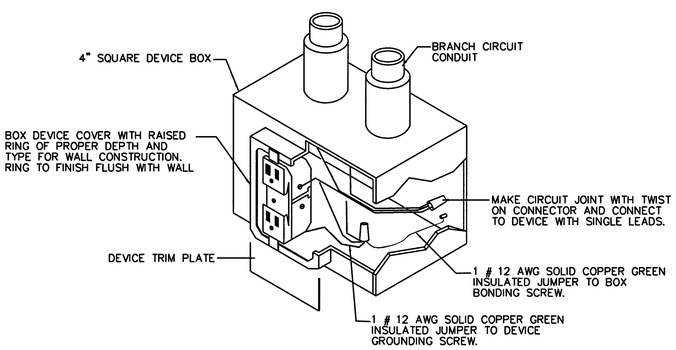

4 / E7 RECEPTACLE GROUNDING DETAIL
SCALE: NONE

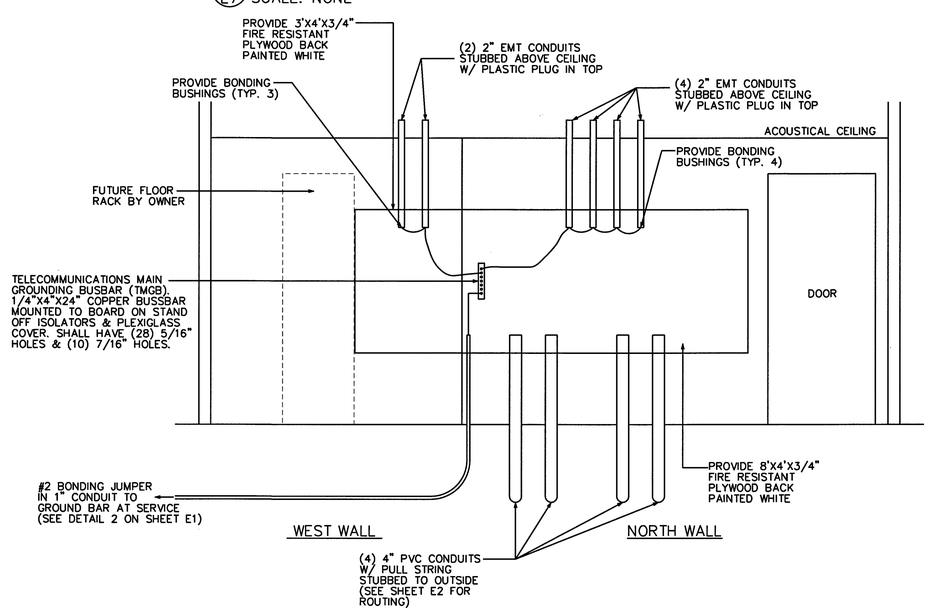

5 / E7 TELECOMMUNICATIONS BACK BOARD DETAIL (ROOM 115)
SCALE: NONE

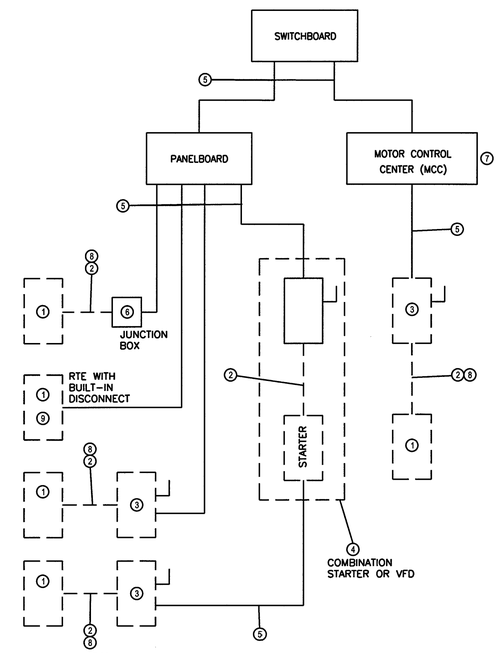

ELECTRICAL NOTES

1. Equipment of trades other than electrical.
2. Conduit and wiring by HVAC or plumbing contractor or other trades.
3. If an additional disconnect switch is required by the NEC, it shall be provided and installed by the contractor furnishing the equipment.
4. A combination starter or VFD may be used in lieu of a separate disconnect switch and starter. Locate adjacent to the equipment.
5. Feeder circuit wiring and conduit in electrical work. See panelboard schedules for wire and circuit breaker sizes.
6. Junction box may be shown on the electrical plans for some equipment. If no starter or disconnect is supplied, a junction box shall be installed adjacent to the equipment. The electrical contractor shall provide line side wiring to the junction box. Load side wiring will be provided by the mechanical contractor or other trades.
7. For projects utilizing an MCC, the starter, circuit breaker, or VFD in the MCC are provided by the electrical contractor.
8. In all cases the equipment contractor shall make final connections, start up, and test the equipment.
9. If roof fan is not provided with built-in switch, the electrical contractor shall provide a disconnect switch.
10. In a single prime contract, it is the responsibility of the prime contractor to coordinate between the electrical and the other trades.

6 / E7 EQUIPMENT CONNECTION RESPONSIBILITY
SCALE: NONE

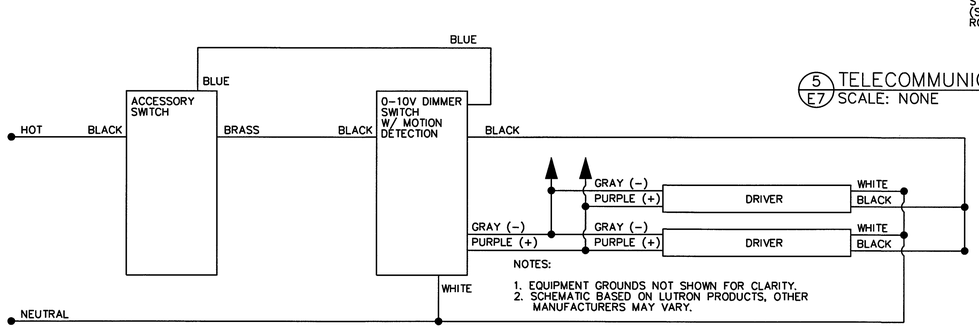

NOTES:

1. EQUIPMENT GROUNDS NOT SHOWN FOR CLARITY.
2. SCHEMATIC BASED ON LUTRON PRODUCTS, OTHER MANUFACTURERS MAY VARY.

7 / E7 CONFERENCE ROOM (116) LIGHTING CONTROL SCHEMATIC
SCALE: NONE

PROJECT NO.: P1540-004
DRAWING NO.: 00?

STROUD ENGINEERING, P.A.
(1078 COMMERCE STREET
GREENVILLE, NC 27858
(252) 756-9352
LICENSE NO. C-0647
L. MICHAEL STROUD, P.E.
SEAL:
SEAL NOT VALID UNLESS SIGNED AND DATED
DESIGNED BY:
FACILITIES DESIGN ARCHITECTS & ENGINEERS
FACILITIES MANAGEMENT DIVISION, NCDOT
1 SOUTH, WILMINGTON STREET
RALEIGH, NORTH CAROLINA, 27601
PHONE:919/707-4540 FAX:919/715-0399

CONSULTANT:

CONSTRUCTION DOCUMENTS

DRAWING TITLE / DESCRIPTION: ELECTRICAL DETAILS

PROJECT TITLE:
CASTLE HAYNE MULTI-UNIT OFFICE BUILDING
NEW HANOVER COUNTY, DIVISION 3, NCDOT
5310 BARBADOS BLVD., SUITE 102
CASTLE HAYNE, NC 28429
NEW HANOVER COUNTY, NORTH CAROLINA

STATE CONSTRUCTION ID.# 15-12499-02A

ASSET NUMBER:
CO.# SITE.# BLDG.#
71 - . - . .

REVISIONS

NO.	DATE

DATE ISSUED: 01/09/18
DRAWN BY: LMS
CHECKED BY: LMS
SHEET NO.
E7 OF 7