This electronic collection of documents is provided for the convenience of the user and is Not a Certified Document –

The documents contained herein were originally issued and sealed by the individuals whose names and license numbers appear on each page, on the dates appearing with their signature on that page.
This file or an individual page shall not be considered a certified document.

DocuSign Envelope ID: 728B8B88-00F8-48B6-99FD-74E74A191FAF

TIP PROJECT: B-5629

CONTRACT: DC00423

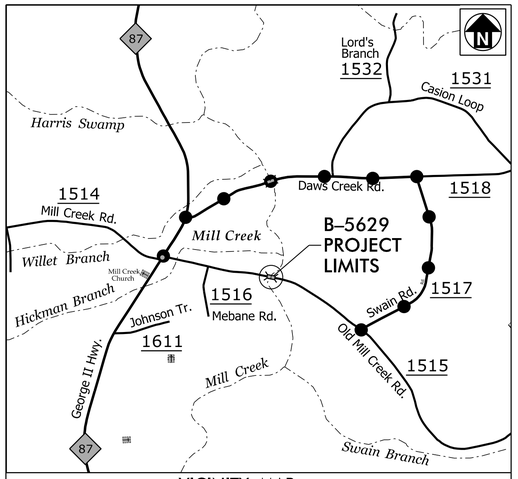

VICINITY MAP
(NOT TO SCALE)
OFF-SITE DETOUR

See Sheet 1A For Index of Sheets,
See Sheet 1B For Conventional Symbols

STATE OF NORTH CAROLINA
DIVISION OF HIGHWAYS

BRUNSWICK COUNTY

STATE	STATE PROJECT REFERENCE NO.	SHEET NO.	TOTAL SHEETS
N.C.	B-5629	1	

STATE PROJECT NO.	F.A. PROJ. NO.	DESCRIPTION
45584.1.1	BRZ-1515(011)	PE
45584.2.1	BRZ-1515(011)	R/W, UTL
45584.3.1	BRZ-1515(011)	CONST

LOCATION: BRIDGE NO. 40 OVER MILL CREEK ON SR 1515 (OLD MILL CREEK ROAD SE)

TYPE OF WORK: GRADING, PAVING, DRAINAGE AND STRUCTURE

4

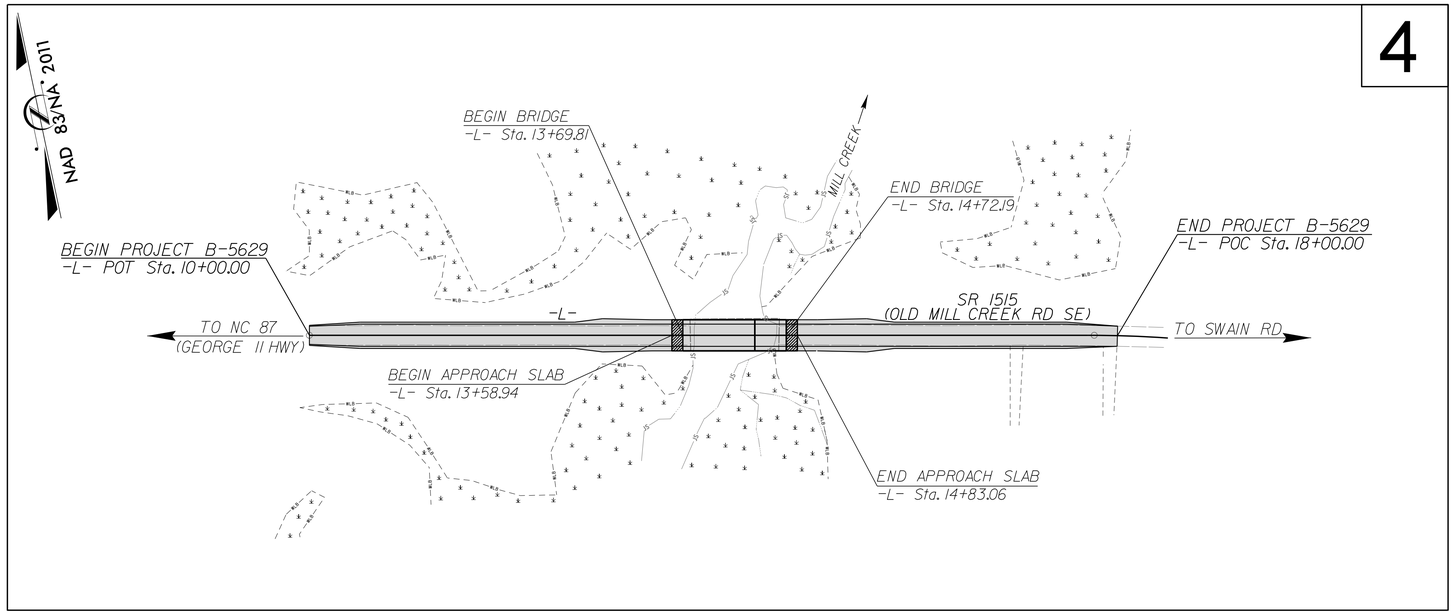

DOCUMENT NOT CONSIDERED FINAL
UNLESS ALL SIGNATURES COMPLETED

GRAPHIC SCALES

50 25 0 50 100
PLANS

50 25 0 50 100
PROFILE (HORIZONTAL)

10 5 0 10 20
PROFILE (VERTICAL)

DESIGN DATA

ADT 2019 = 720
ADT 2045 = 900
K = TBD
D = TBD
T = 3% *
V = 60 MPH
* TTST 1% DUAL 2%
FUNC CLASS =
SUB REGIONAL TIER
LOCAL

PROJECT LENGTH

LENGTH ROADWAY TIP PROJECT = 0.133 MILES

LENGTH STRUCTURE TIP PROJECT = 0.019 MILES

TOTAL LENGTH TIP PROJECT = 0.152 MILES

PLANS PREPARED FOR THE NCDOT BY:
MOTT MACDONALD
7621 Purfoy Road, Suite 115
Fuquay-Varina, NC 27526
(919) 552-2253
(919) 552-2254 (Fax)
www.mottmac.com
LICENSE NO. F-0669

2018 STANDARD SPECIFICATIONS

RIGHT OF WAY DATE:
FEBRUARY 25, 2022

LETTING DATE:
MARCH 16, 2023

TIM JORDAN, PE
PROJECT ENGINEER

PADDY JORDAN
PROJECT DESIGN ENGINEER

DEREK PIELECH, PE
NCDOT CONTACT
DIVISION BRIDGE
PROGRAM MANAGER

ROADWAY DESIGN ENGINEER
NORTH CAROLINA PROFESSIONAL SEAL 21102 ENGINEER TIMOTHY JORDAN
DocuSigned by: James Timothy Jordan 1/24/2023
SIGNATURE: P.E.

HYDRAULICS ENGINEER
NORTH CAROLINA PROFESSIONAL SEAL 21162 ENGINEER W. HERBERT TURNER, JR.
DocuSigned by: W Herbert Turner Jr. 1/24/2023
SIGNATURE: P.E.

STATE OF NORTH CAROLINA DEPARTMENT OF TRANSPORTATION

1/24/2023
3:08:19 PM
R:\Roadway\Proj\B5629_rdy_tsh.dgn
default

DocuSign Envelope ID: 0E52CD8E-555F-4193-91D2-80B6F0D0C5DC

PROJECT REFERENCE	SHEET NO.
B–5629	1A

ROADWAY DESIGN ENGINEER

NORTH CAROLINA PROFESSIONAL SEAL 21102 ENGINEER JAMES ANGELL EVANS JORDAN

DocuSigned by: James Angell Evans Jordan
10/6/2022

MOTT MACDONALD I & E, LLC
LICENSE NO. F–0669

DOCUMENT NOT CONSIDERED FINAL UNLESS ALL SIGNATURES COMPLETED

Prepared in the Office of:

MOTT MACDONALD
7621 Purfoy Road, Suite 115
Fuquay–Varina, NC 27526
www.mottmac.com

GENERAL NOTES

GENERAL NOTES: 2018 SPECIFICATIONS

EFFECTIVE: 01–16–18

GRADING AND SURFACING:

THE GRADE LINES SHOWN DENOTE THE FINISHED ELEVATION OF THE PROPOSED SURFACING AT GRADE POINTS SHOWN ON THE TYPICAL SECTIONS. GRADE LINES MAY BE ADJUSTED AT THEIR BEGINNING AND ENDING AND AT STRUCTURES AS DIRECTED BY THE ENGINEER IN ORDER TO SECURE A PROPER TIE–IN.

CLEARING:

CLEARING ON THIS PROJECT SHALL BE PERFORMED TO THE LIMITS ESTABLISHED BY MODIFIED METHOD III.

SUPERELEVATION:

ALL CURVES ON THIS PROJECT SHALL BE SUPERELEVATED IN ACCORDANCE WITH STD. NO. 225.04 USING THE RATE OF SUPERELEVATION AND RUNOFF SHOWN ON THE PLANS. SUPERELEVATION IS TO BE REVOLVED ABOUT THE GRADE POINTS SHOWN ON THE TYPICAL SECTIONS.

SHOULDER CONSTRUCTION:

ASPHALT, EARTH, AND CONCRETE SHOULDER CONSTRUCTION ON THE HIGH SIDE OF SUPERELEVATED CURVES SHALL BE IN ACCORDANCE WITH STD. NO. 560.01.

SUBSURFACE DRAINS:

SUBSURFACE DRAINS SHALL BE CONSTRUCTED IN ACCORDANCE WITH STD. NO. 815.02 AT LOCATIONS DIRECTED BY THE ENGINEERS.

GUARDRAIL:

THE GUARDRAIL LOCATIONS SHOWN ON THE PLANS MAY BE ADJUSTED DURING CONSTRUCTION AS DIRECTED BY THE ENGINEER. THE CONTRACTOR SHOULD CONSULT WITH THE ENGINEER PRIOR TO ORDERING GUARDRAIL MATERIAL.

SUBSURFACE PLANS:

SUBSURFACE PLANS ARE AVAILABLE ON THIS PROJECT FOR THE STRUCTURE ONLY. THE CONTRACTOR SHOULD MAKE HIS OWN INVESTIGATION AS TO THE SUBSURFACE CONDITIONS.

END BENTS:

THE SURVEYOR SHALL CHECK THE STRUCTURE END BENT PLANS, DETAILS, AND CROSS–SECTIONS PRIOR TO SETTING OF THE SLOPE STAKES FOR THE EMBANKMENT OR EXCAVATION APPROACHING A BRIDGE.

UTILITIES:

UTILITY OWNERS ON THIS PROJECT ARE BRUNSWICK ELECTRIC AND ATMC.

ANY RELOCATION OF EXISTING UTILITIES WILL BE ACCOMPLISHED BY OTHERS.

LIST OF ROADWAY STANDARD DRAWINGS

EFF. 01–16–2018

2018 ROADWAY ENGLISH STANDARD DRAWINGS

The following Roadway Standards as appear in "Roadway Standard Drawings" Highway Design Branch – N. C. Department of Transportation – Raleigh, N. C., Dated January, 2018 are applicable to this project and by reference hereby are considered a part of these plans:

STD.NO.	TITLE
DIVISION 2 – EARTHWORK	
225.02	Guide for Grading Subgrade – Secondary and Local
225.04	Method of Obtaining Superelevation – Two Lane Pavement
DIVISION 3 – PIPE CULVERTS	
300.01	Method of Pipe Installation
310.10	Driveway Pipe Construction
DIVISION 4 – MAJOR STRUCTURES	
422.02	Bridge Approach Fills – Type II Modified Approach Fill
DIVISION 5 – SUBGRADE, BASES AND SHOULDERS	
560.01	Method of Shoulder Construction – High Side of Superelevated Curve – Method I
DIVISION 8 – INCIDENTALS	
815.02	Subsurface Drain
815.03	Pipe Underdrain and Blind Drain
840.00	Concrete Base Pad for Drainage Structures
840.25	Anchorage for Frames – Brick or Concrete or Precast
840.29	Frames and Narrow Slot Flat Grates
840.35	Traffic Bearing Grated Drop Inlet – for Cast Iron Double Frame and Grates
840.46	Traffic Bearing Precast Drainage Structure
840.66	Drainage Structure Steps
846.01	Concrete Curb, Gutter and Curb & Gutter
846.04	Drop Inlet Installation in Shoulder Berm Gutter
862.01	Guardrail Placement
862.02	Guardrail Installation
876.02	Guide for Rip Rap at Pipe Outlets

INDEX OF SHEETS

SHEET NUMBER	DESCRIPTION
1	TITLE SHEET
1A	INDEX OF SHEETS, GENERAL NOTES, AND LIST OF STANDARD DRAWINGS
1B	CONVENTIONAL SYMBOLS
2A–1	PAVEMENT SCHEDULE AND TYPICAL SECTIONS
2C–1	GUARDRAIL INSTALLATION DETAIL
2C–2	GUARDRAIL ANCHOR UNITS DETAIL
2C–3	MODIFIED METHOD III CLEARING DETAIL
3B–1	GUARDRAIL, EARTHWORK, AND SHOULDER BERM GUTTER SUMMARY
3D–1	DRAINAGE SUMMARY
3G–1	GEOTECHNICAL SUMMARY
4	PLAN SHEET
5	PROFILE SHEET
RW–01 THRU RW–04	SURVEY CONTROL SHEET
TMP–1 THRU TMP–5	TRAFFIC MANAGEMENT PLANS
EC–1 THRU EC–5	EROSION CONTROL PLANS
SIGN–1 THRU SIGN–3A	SIGNING AND PAVEMENT MARKING PLANS
UO–1 THRU UO–2	UTILITIES BY OTHERS PLANS
X–1 THRU X–5	CROSS–SECTIONS
S1–0 THRU S1–23	STRUCTURE PLANS
SN	STRUCTURE NOTES

MOTT MACDONALD
R:\Roadway\Proj\B5629_rdy_psh1A.dgn
10/6/2022
10/6/2022

PROJECT REFERENCE	SHEET NO.
B-5629	1B

STATE OF NORTH CAROLINA, DIVISION OF HIGHWAYS

CONVENTIONAL PLAN SHEET SYMBOLS

Note: Not to Scale **S.U.E. = Subsurface Utility Engineering*

BOUNDARIES AND PROPERTY:

- State Line
- County Line
- Township Line
- City Line
- Reservation Line
- Property Line
- Existing Iron Pin — EIP
- Computed Property Corner
- Property Monument — ECM
- Parcel/Sequence Number — 123
- Existing Fence Line
- Proposed Woven Wire Fence
- Proposed Chain Link Fence
- Proposed Barbed Wire Fence
- Existing Wetland Boundary — WLB
- Proposed Wetland Boundary — WLB
- Existing Endangered Animal Boundary — EAB
- Existing Endangered Plant Boundary — EPB
- Existing Historic Property Boundary — HPB
- Known Contamination Area: Soil — S
- Potential Contamination Area: Soil — S
- Known Contamination Area: Water — W
- Potential Contamination Area: Water — W
- Contaminated Site: Known or Potential

BUILDINGS AND OTHER CULTURE:

- Gas Pump Vent or U/G Tank Cap
- Sign — S
- Well — W
- Small Mine
- Foundation
- Area Outline
- Cemetery
- Building
- School
- Church
- Dam

HYDROLOGY:

- Stream or Body of Water
- Hydro, Pool or Reservoir
- Jurisdictional Stream — JS
- Buffer Zone 1 — BZ 1
- Buffer Zone 2 — BZ 2
- Flow Arrow
- Disappearing Stream
- Spring
- Wetland
- Proposed Lateral, Tail, Head Ditch — FLOW
- False Sump

RAILROADS:

- Standard Gauge — CSX TRANSPORTATION
- RR Signal Milepost — MILEPOST 35
- Switch — SWITCH
- RR Abandoned
- RR Dismantled

RIGHT OF WAY & PROJECT CONTROL:

- Secondary Horiz and Vert Control Point
- Primary Horiz Control Point
- Primary Horiz and Vert Control Point
- Exist Permanent Easment Pin and Cap
- New Permanent Easement Pin and Cap
- Vertical Benchmark
- Existing Right of Way Marker
- Existing Right of Way Line
- New Right of Way Line — RW
- New Right of Way Line with Pin and Cap — RW
- New Right of Way Line with Concrete or Granite R/W Marker — RW
- New Control of Access Line with Concrete C/A Marker — CA
- Existing Control of Access — CA
- New Control of Access — CA
- Existing Easement Line — E
- New Temporary Construction Easement — E
- New Temporary Drainage Easement — TDE
- New Permanent Drainage Easement — PDE
- New Permanent Drainage / Utility Easement — DUE
- New Permanent Utility Easement — PUE
- New Temporary Utility Easement — TUE
- New Aerial Utility Easement — AUE

ROADS AND RELATED FEATURES:

- Existing Edge of Pavement
- Existing Curb
- Proposed Slope Stakes Cut — C
- Proposed Slope Stakes Fill — F
- Proposed Curb Ramp — CR
- Existing Metal Guardrail
- Proposed Guardrail
- Existing Cable Guiderail
- Proposed Cable Guiderail
- Equality Symbol
- Pavement Removal

VEGETATION:

- Single Tree
- Single Shrub
- Hedge
- Woods Line
- Orchard
- Vineyard — Vineyard

EXISTING STRUCTURES:

MAJOR:

- Bridge, Tunnel or Box Culvert — CONC
- Bridge Wing Wall, Head Wall and End Wall — CONC WW

MINOR:

- Head and End Wall — CONC HW
- Pipe Culvert
- Footbridge
- Drainage Box: Catch Basin, DI or JB — CB
- Paved Ditch Gutter
- Storm Sewer Manhole — S
- Storm Sewer — S

UTILITIES:

POWER:

- Existing Power Pole
- Proposed Power Pole
- Existing Joint Use Pole
- Proposed Joint Use Pole
- Power Manhole — P
- Power Line Tower
- Power Transformer
- U/G Power Cable Hand Hole
- H-Frame Pole
- U/G Power Line LOS B (S.U.E.*) — P
- U/G Power Line LOS C (S.U.E.*) — P
- U/G Power Line LOS D (S.U.E.*) — P

TELEPHONE:

- Existing Telephone Pole
- Proposed Telephone Pole
- Telephone Manhole — T
- Telephone Pedestal — T
- Telephone Cell Tower
- U/G Telephone Cable Hand Hole
- U/G Telephone Cable LOS B (S.U.E.*) — T
- U/G Telephone Cable LOS C (S.U.E.*) — T
- U/G Telephone Cable LOS D (S.U.E.*) — T
- U/G Telephone Conduit LOS B (S.U.E.*) — TC
- U/G Telephone Conduit LOS C (S.U.E.*) — TC
- U/G Telephone Conduit LOS D (S.U.E.*) — TC
- U/G Fiber Optics Cable LOS B (S.U.E.*) — T FO
- U/G Fiber Optics Cable LOS C (S.U.E.*) — T FO
- U/G Fiber Optics Cable LOS D (S.U.E.*) — T FO

WATER:

- Water Manhole — W
- Water Meter
- Water Valve
- Water Hydrant
- U/G Water Line LOS B (S.U.E*) — W
- U/G Water Line LOS C (S.U.E*) — W
- U/G Water Line LOS D (S.U.E*) — W
- Above Ground Water Line — A/G Water

TV:

- TV Pedestal — C
- TV Tower
- U/G TV Cable Hand Hole — HH
- U/G TV Cable LOS B (S.U.E.*) — TV
- U/G TV Cable LOS C (S.U.E.*) — TV
- U/G TV Cable LOS D (S.U.E.*) — TV
- U/G Fiber Optic Cable LOS B (S.U.E.*) — TV FO
- U/G Fiber Optic Cable LOS C (S.U.E.*) — TV FO
- U/G Fiber Optic Cable LOS D (S.U.E.*) — TV FO

GAS:

- Gas Valve
- Gas Meter
- U/G Gas Line LOS B (S.U.E.*) — G
- U/G Gas Line LOS C (S.U.E.*) — G
- U/G Gas Line LOS D (S.U.E.*) — G
- Above Ground Gas Line — A/G Gas

SANITARY SEWER:

- Sanitary Sewer Manhole
- Sanitary Sewer Cleanout
- U/G Sanitary Sewer Line — SS
- Above Ground Sanitary Sewer — A/G Sanitary Sewer
- SS Forced Main Line LOS B (S.U.E.*) — FSS
- SS Forced Main Line LOS C (S.U.E.*) — FSS
- SS Forced Main Line LOS D (S.U.E.*) — FSS

MISCELLANEOUS:

- Utility Pole
- Utility Pole with Base
- Utility Located Object
- Utility Traffic Signal Box — S
- Utility Unknown U/G Line LOS B (S.U.E.*) — ?UTL
- U/G Tank; Water, Gas, Oil
- Underground Storage Tank, Approx. Loc. — UST
- A/G Tank; Water, Gas, Oil
- Geoenvironmental Boring
- U/G Test Hole LOS A (S.U.E.*)
- Abandoned According to Utility Records — AATUR
- End of Information — E.O.I.

12/2/2016

MOTT MACDONALD
R:\Roadway\Proj\B5629_rdy_psh1B.dgn
10/6/2022
10/6/2022

DocuSign Envelope ID: 0E52CD8E-555F-4193-91D2-80B6F0D0C5DC

PROJECT REFERENCE	SHEET NO.
B-5629	2A-1

ROADWAY DESIGN ENGINEER
NORTH CAROLINA PROFESSIONAL SEAL 21102 ENGINEER JAMES TIMOTHY MORTON
DocuSigned by: James Timothy Morton
10/6/2022

PAVEMENT DESIGN ENGINEER
NORTH CAROLINA PROFESSIONAL SEAL 022896 ENGINEER CARL S. MORRISON
DocuSigned by: Carl S. Morrison
10/10/2022

MOTT MACDONALD I & E, LLC
LICENSE NO. F-0669

DOCUMENT NOT CONSIDERED FINAL UNLESS ALL SIGNATURES COMPLETED

Prepared in the Office of:
MOTT MACDONALD
7621 Purfoy Road, Suite 115
Fuquay-Varina, NC 27526
www.mottmac.com

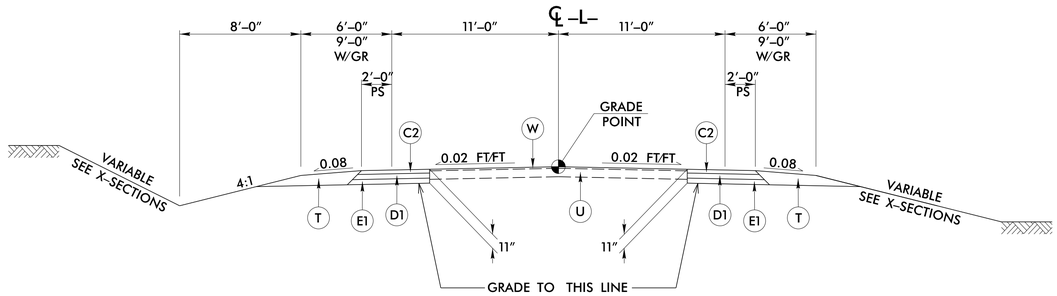

TYPICAL SECTION NO. 1

TRANSITION FROM EXISTING TO TYPICAL SECTION NO. 1:
-L- STA 10+00.00 TO 10+50.00

USE TYPICAL SECTION NO. 1:
-L- STA 10+50.00 TO 13+69.81 (BEGIN BRIDGE)
-L- STA 14+72.19 (END BRIDGE) TO 17+50.00

TRANSITION FROM TYPICAL SECTION NO. 1 TO EXISTING:
-L- STA 17+50.00 TO 18+00.00

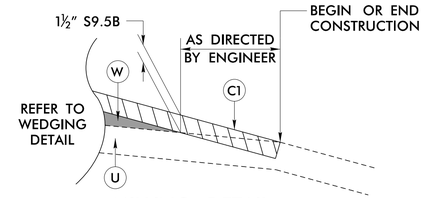

MILLING DETAIL

DETAIL SHOWING PROFILE VIEW

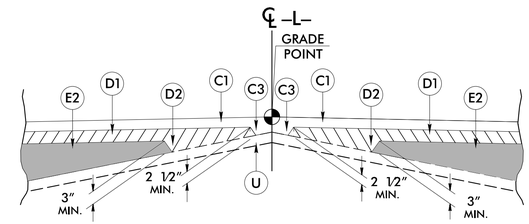

DETAIL SHOWING METHOD OF WEDGING

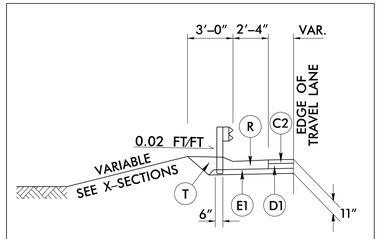

DETAIL FOR SHOULDER BERM GUTTER IN CONJUNCTION WITH GUARDRAIL

-L- STA 14+83.06 TO 14+98 RT
-L- STA 14+83.06 TO 14+98 LT

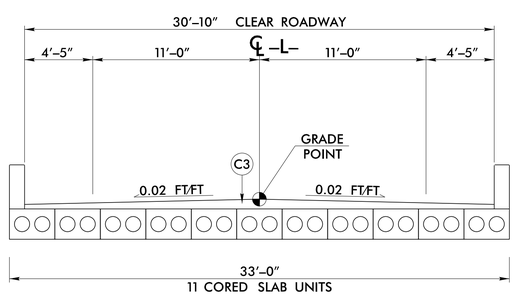

TYPICAL SECTION NO. 2

USE TYPICAL SECTION NO. 2:
-L- STA 13+69.81 (BEGIN BRIDGE) TO 14+72.19 (END BRIDGE)

NOTE: SEE STRUCTURE PLANS FOR PAVEMENT DEPTHS ON STRUCTURE

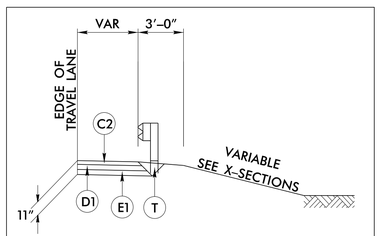

DETAIL FOR FULL DEPTH PAVED SHOULDER IN CONJUNCTION WITH GUARDRAIL

FINAL PAVEMENT SCHEDULE

C1	PROP. APPROX. 1½" ASPHALT CONCRETE SURFACE COURSE, TYPE S9.5B, AT AN AVERAGE RATE OF 165 LBS. PER SQ. YD.
C2	PROP. APPROX. 3" ASPHALT CONCRETE SURFACE COURSE, TYPE S9.5B, AT AN AVERAGE RATE OF 165 LBS. PER SQ. YD. IN EACH OF TWO LAYERS.
C3	PROP. VAR. DEPTH ASPHALT CONCRETE SURFACE COURSE, TYPE S9.5B, AT AN AVERAGE RATE OF 110 LBS. PER SQ. YD. PER 1" DEPTH. TO BE PLACED IN LAYERS NOT LESS THAN 1" IN DEPTH OR GREATER THAN 1½" IN DEPTH.
D1	PROP. APPROX. 4" ASPHALT CONCRETE INTERMEDIATE COURSE, TYPE I19.0C, AT AN AVERAGE RATE OF 456 LBS. PER SQ. YD.
D2	PROP. VAR. DEPTH ASPHALT CONCRETE INTERMEDIATE COURSE, TYPE I19.0C, AT AN AVERAGE RATE OF 114 LBS. PER SQ. YD. PER 1" DEPTH, TO BE PLACED IN LAYERS NOT LESS THAN 2½" IN DEPTH OR GREATER THAN 4" IN DEPTH.
E1	PROP. APPROX. 4" ASPHALT CONCRETE BASE COURSE, TYPE B25.0C, AT AN AVERAGE RATE OF 456 LBS. PER SQ. YD.
E2	PROP. VAR. DEPTH ASPHALT CONCRETE BASE COURSE, TYPE B25.0C, AT AN AVERAGE RATE OF 114 LBS. PER SQ. YD. PER 1" DEPTH TO BE PLACED IN LAYERS NOT LESS THAN 4" IN DEPTH OR GREATER THAN 5½" IN DEPTH.
R	SHOULDER BERM GUTTER.
T	EARTH MATERIAL.
U	EXISTING PAVEMENT.
W	WEDGING (SEE DETAIL SHOWING METHOD OF WEDGING).

NOTE: PAVEMENT EDGE SLOPES ARE 1:1 UNLESS SHOWN OTHERWISE.

MOTT MACDONALD
R:\Roadway\Proj\B5629_rdy_typ.dgn
10/6/2022

DocuSign Envelope ID: 0E52CD8E-555F-4193-91D2-80B6F0D0C5DC

PROJECT REFERENCE NO.	SHEET NO.
B-5629	2C-1

DOCUMENT NOT CONSIDERED FINAL UNLESS ALL SIGNATURES COMPLETED

STATE OF NORTH CAROLINA
DEPT. OF TRANSPORTATION
DIVISION OF HIGHWAYS
RALEIGH, N.C.

ROADWAY DETAIL DRAWING FOR
GUARDRAIL INSTALLATION

SHEET 6 OF 8
862D02

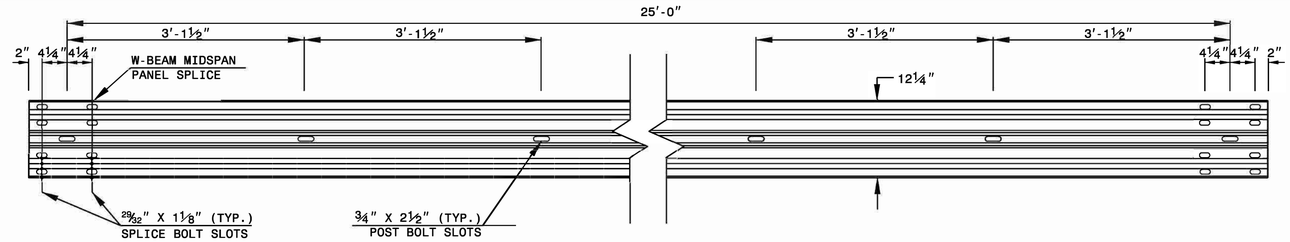

STANDARD W-BEAM GUARDRAIL

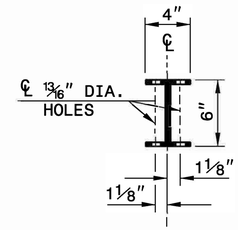

PLAN

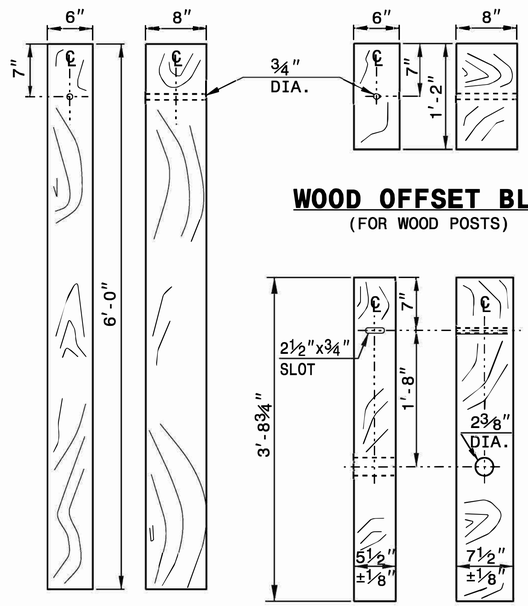

STANDARD LINE POST

WOOD OFFSET BLOCK
(FOR WOOD POSTS)

SHORT WOOD BREAKAWAY POST

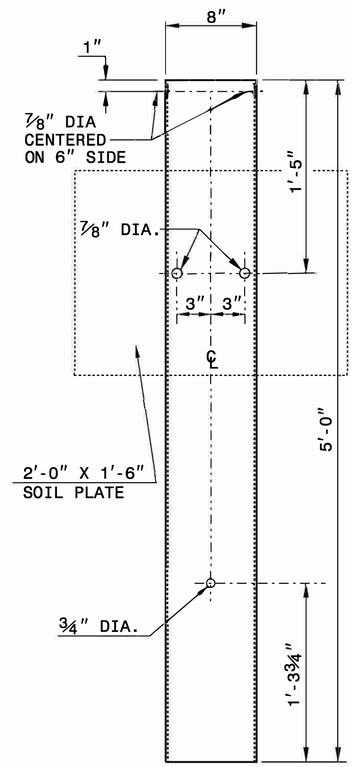

STEEL TUBE
TS 6"x8"x0.1875"

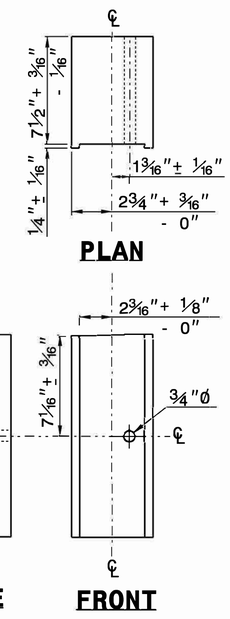

ROUTED OFFSET BLOCK

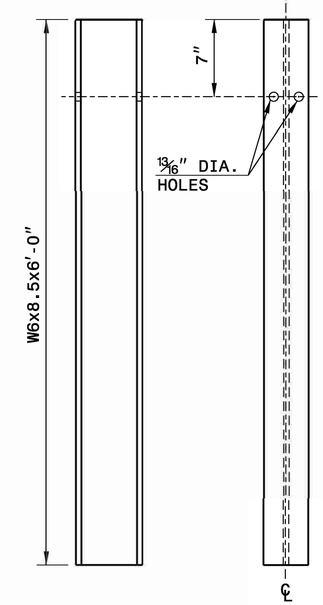

SIDE **FRONT**

"W6" STEEL POST

SYSTEM PARTS

STATE OF NORTH CAROLINA
DEPT. OF TRANSPORTATION
DIVISION OF HIGHWAYS
RALEIGH, N.C.

ROADWAY DETAIL DRAWING FOR
GUARDRAIL INSTALLATION

SHEET 6 OF 8
862D02

CONTRACTS STANDARDS AND DEVELOPMENT UNIT
Office 919-707-6950 FAX 919-250-4119

SEE TITLE BLOCK

ORIGINAL BY: J.HOWERTON DATE: 3-7-2018
MODIFIED BY: DATE:
CHECKED BY: DATE:
FILE SPEC.:

DocuSign Envelope ID: 0E5C2C8E-555F-4193-9102-808BF0D0C52C

14-DEC-2017 10:36
S:\Contracts\Contracts\Special Details\jhowerton\Standard Drawings\2018 Standard Drawings\Details in Lieu of Standards\Division 8\0862d0301.dgn
jhowerton AT CSD-292595

STATE OF NORTH CAROLINA
DEPT. OF TRANSPORTATION
DIVISION OF HIGHWAYS
RALEIGH, N.C.

ROADWAY DETAIL DRAWING FOR
STRUCTURE ANCHOR UNITS
GUARDRAIL ANCHOR UNIT, TYPE III
FOR ATTACHMENT TO RAIL ON BRIDGE

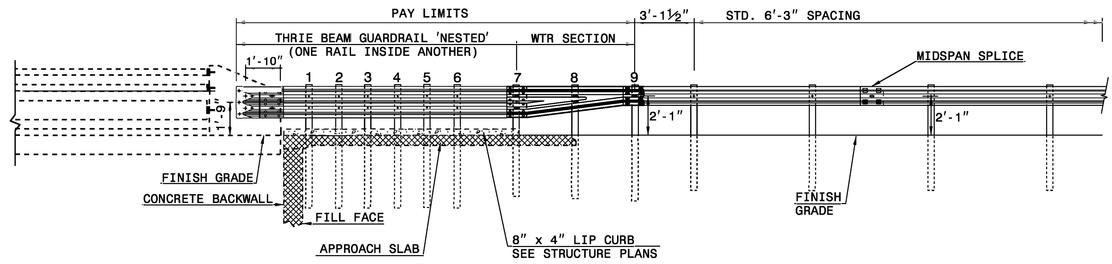

ELEVATION

NOTE:
**POST NOT REQUIRED FOR SKEW ANGLES GREATER THAN 150° OR LESS THAN 30° UNLESS OTHERWISE DIRECTED BY THE ENGINEER.
*THE DISTANCE FROM END OF BRIDGE RAIL TO CENTER LINE OF THE FIRST POST SHOULD BE 11½" IF CONCRETE BACKWALL IS NOT PRESENT.
-SHOULDER BERM GUTTER MUST BE INSTALLED TO THE LIMITS 8" x 4" LIP CURB IS SHOWN IF ANCHOR UNIT IS NOT ADJACENT TO AN APPROACH SLAB.
-MEASURE GUARDRAIL HEIGHT FROM THE TOP OF ADJACENT SURFACE (SHOULDER, BERM, OR GUTTER).
-LAP JOINTS IN THE DIRECTION OF TRAFFIC FLOW.
-SEE SHEET 3 FOR POST SECTIONS 1 THRU 9.

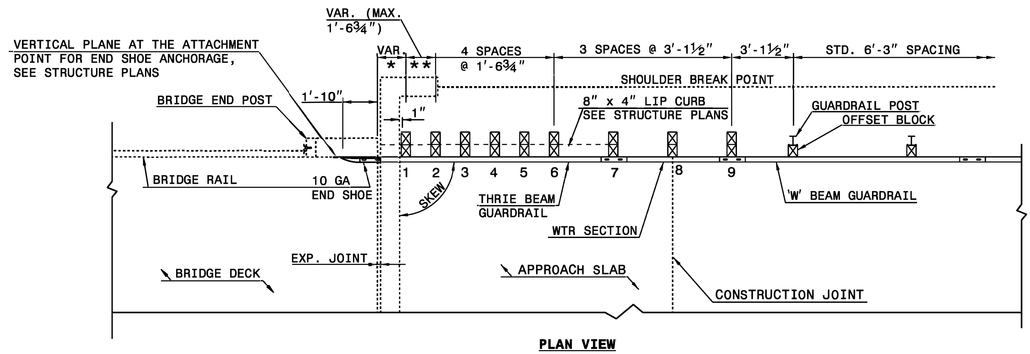

PLAN VIEW

GUARDRAIL ANCHOR UNIT, TYPE III FOR ATTACHMENT TO RAIL ON BRIDGE

SHEET 1 OF 7
862D03

STATE OF NORTH CAROLINA
DEPT. OF TRANSPORTATION
DIVISION OF HIGHWAYS
RALEIGH, N.C.

ROADWAY DETAIL DRAWING FOR
STRUCTURE ANCHOR UNITS
GUARDRAIL ANCHOR UNIT, TYPE III
FOR ATTACHMENT TO RAIL ON BRIDGE

SHEET 1 OF 7
862D03

STATE OF NORTH CAROLINA
DEPT. OF TRANSPORTATION
DIVISION OF HIGHWAYS
RALEIGH, N.C.

ROADWAY DETAIL DRAWING FOR
STRUCTURE ANCHOR UNITS
GUARDRAIL ANCHOR UNIT, TYPE III FOR ATTACHMENT TO RAIL ON BRIDGE - SUB REGIONAL TIER

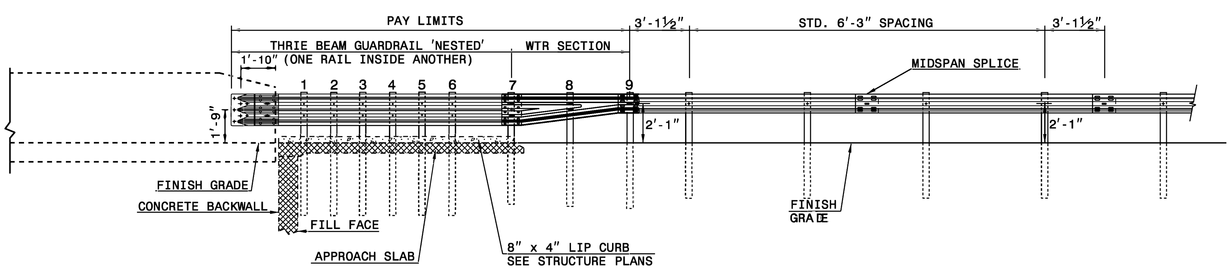

ELEVATION

NOTE:
**POST NOT REQUIRED FOR SKEW ANGLES GREATER THAN 150° OR LESS THAN 30° UNLESS OTHERWISE DIRECTED BY THE ENGINEER.
*THE DISTANCE FROM END OF BRIDGE RAIL TO CENTER LINE OF THE FIRST POST SHOULD BE 11½" IF CONCRETE BACKWALL IS NOT PRESENT.
-SHOULDER BERM GUTTER MUST BE INSTALLED TO THE LIMITS 8" x 4" LIP CURB IS SHOWN IF ANCHOR UNIT IS NOT ADJACENT TO AN APPROACH SLAB.
-MEASURE GUARDRAIL HEIGHT FROM THE TOP OF ADJACENT SURFACE (SHOULDER, BERM, OR GUTTER).
-LAP JOINTS IN THE DIRECTION OF TRAFFIC FLOW.
-SEE SHEET 3 FOR POST SECTIONS 1 THRU 9.

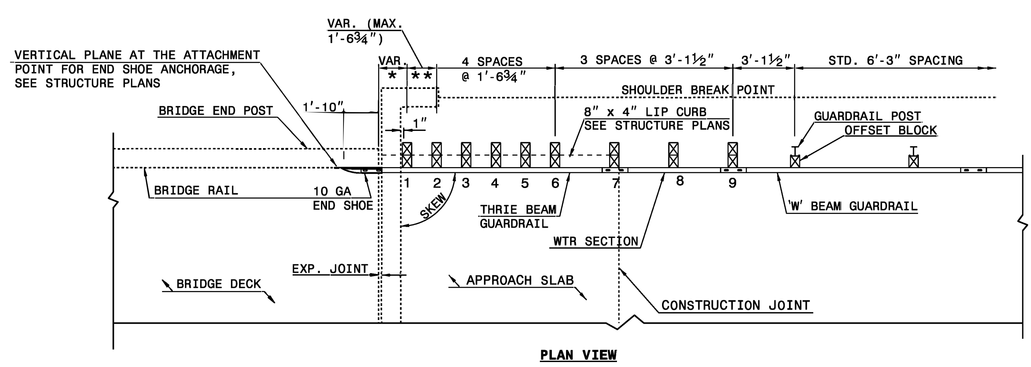

PLAN VIEW

GUARDRAIL ANCHOR UNIT, TYPE III FOR ATTACHMENT TO RAIL ON BRIDGE - SUB REGIONAL TIER

SHEET 2 OF 7
862D03

STATE OF NORTH CAROLINA
DEPT. OF TRANSPORTATION
DIVISION OF HIGHWAYS
RALEIGH, N.C.

ROADWAY DETAIL DRAWING FOR
STRUCTURE ANCHOR UNITS
GUARDRAIL ANCHOR UNIT, TYPE III FOR ATTACHMENT TO RAIL ON BRIDGE - SUB REGIONAL TIER

SHEET 2 OF 7
862D03

SEE TITLE BLOCK

ORIGINAL BY: J. HOWERTON DATE: 06-22-12
MODIFIED BY: DATE:
CHECKED BY: DATE:
FILE SPEC.:

CONTRACT STANDARDS AND DEVELOPMENT UNIT
Office 919-707-6950 FAX 919-250-4119

DOCUMENT NOT CONSIDERED FINAL UNLESS ALL SIGNATURES COMPLETED

PROJECT REFERENCE NO. B-5629
SHEET NO. 2C-2

DocuSign Envelope ID: 0E52CD8E-555F-4193-91D2-80B6F0D0C5DC

PROJECT REFERENCE	SHEET NO.
B-5629	2C-3

STATE OF
NORTH CAROLINA
DEPT. OF TRANSPORTATION
DIVISION OF HIGHWAYS
RALEIGH, N.C.

ENGLISH DETAIL DRAWING FOR

METHOD OF CLEARING

MODIFIED METHOD - III

SHEET 1 OF 1

200D03

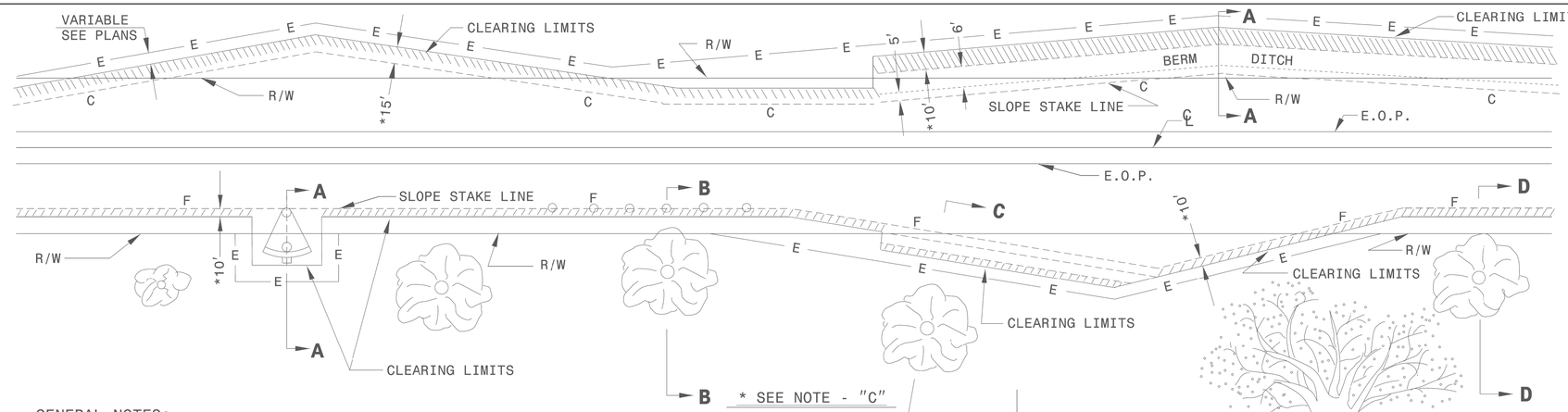

GENERAL NOTES:

1. REMOVE TREES OUTSIDE THE CLEARING LIMIT WHEN, IN THE OPINION OF THE ENGINEER, THE UTILITY OF A TREE WILL BE DESTROYED BY THE CONSTRUCTION OR THE CLEARING OPERATION.
2. CLEAR IN ACCORDANCE WITH THIS STANDARD EXCEPT WHERE ADDITIONAL CLEARING IS REQUIRED FOR SAFETY AS SHOWN ON THE PLANS.

METHOD III CLEARING LIMITS

(A) CUTS -- CLEAR TO CONSTRUCTION LIMITS.
(B) FILLS - CLEAR TO 5'/10' * BEYOND CONSTRUCTION LIMITS, UNLESS SPECIFIED OTHERWISE BY WETLAND PERMIT.
(C) CUTS AND FILLS - WHEN THE CLEARING LIMITS (A AND B) EXCEED THE PROPOSED R/W OR PROPOSED CONSTRUCTION EASEMENTS, THEN CLEAR ONLY TO THE R/W OR CONSTRUCTION EASEMENT WHICHEVER IS GREATER.

* FOR FILL HEIGHTS LESS THAN 10' CLEAR TO 5' BEYOND CONSTRUCTION LIMITS.
* FOR FILL HEIGHTS 10' OR GREATER CLEAR TO 10' BEYOND CONSTRUCTION LIMITS.
** PLACE SILT FENCE AT 5' BEYOND TOE OF SLOPE IN FILL SECTIONS WITH LESS THAN 10'. PLACE SILT FENCE AT 10' BEYOND TOE OF SLOPE IN FILL SECTIONS WITH 10' OR GREATER.

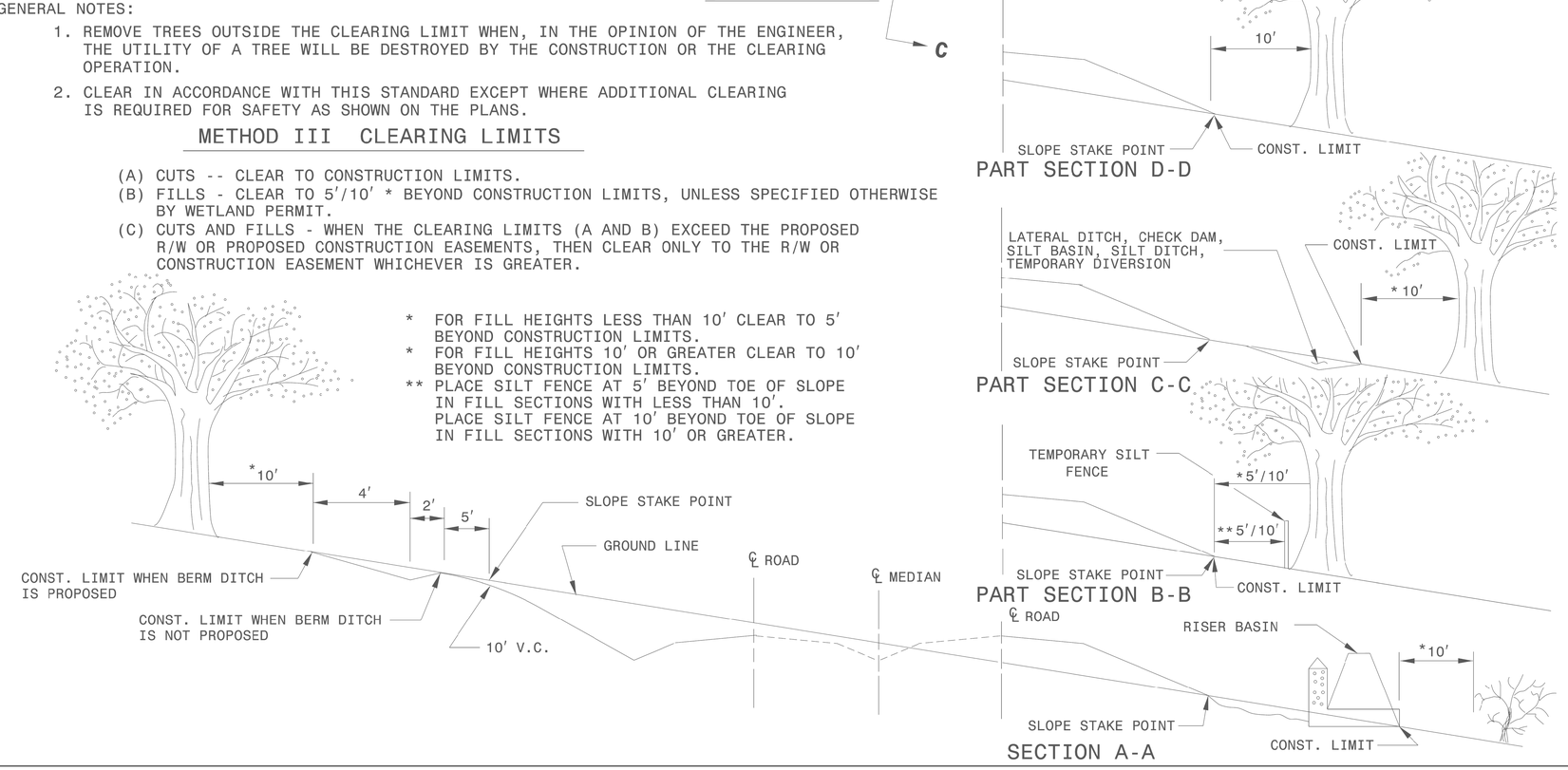

STATE OF
NORTH CAROLINA
DEPT. OF TRANSPORTATION
DIVISION OF HIGHWAYS
RALEIGH, N.C.

ENGLISH DETAIL DRAWING FOR

METHOD OF CLEARING

MODIFIED METHOD - III

SHEET 1 OF 1

200D03

NORTH CAROLINA PROFESSIONAL SEAL 33144 ENGINEER
DocuSigned by:
5B843203347D4CD...
10/6/2022

DOCUMENT NOT CONSIDERED FINAL UNLESS ALL SIGNATURES COMPLETED

CONTRACT STANDARDS AND DEVELOPMENT UNIT
Office 919-707-6950 Fax 919-250-4119

SEE TITLE BLOCK

ORIGINAL BY: _____ DATE: _____
MODIFIED BY: _____ DATE: _____
CHECKED BY: _____ DATE: _____
FILE SPEC.: _____

JOR66165
E:\Documents 9-23-21\HMM Project Info\Details\Method III Clearing Modified Drawing.dgn
4/4/2022 8:20:26 AM

PROJECT REFERENCE	SHEET NO.
B-5629	3B-1

"N" = DISTANCE FROM EDGE OF LANE TO FACE OF GUARDRAIL.
TOTAL SHOULDER WIDTH = DISTANCE FROM EDGE OF TRAVEL LANE TO SHOULDER BREAK POINT.
FLARE LENGTH = DISTANCE FROM LAST SECTION OF PARALLEL GUARDRAIL TO END OF GUARDRAIL.
W = TOTAL WIDTH OF FLARE FROM BEGINNING OF TAPER TO END OF GUARDRAIL.
G = GATING IMPACT ATTENUATOR TYPE 350
NG = NON-GATING IMPACT ATTENUATOR TYPE 350

GUARDRAIL SUMMARY

SURVEY LINE	BEG. STA.	END STA.	LOCATION	LENGTH			WARRANT POINT		"N" DIST. FROM E.O.L.	TOTAL SHOULDER WIDTH	FLARE LENGTH		W		ANCHORS									IMPACT ATTENUATOR TYPE 350			REMARKS
				STRAIGHT	SHOP CURVED	DOUBLE FACED	APPROACH END	TRAILING END			APPROACH END	TRAILING END	APPROACH END	TRAILING END	AT-1	GREU TL-3	TYPE III							NO.	PERMITTED G	PERMITTED NG	
-L-	12+88.56	13+69.81	RT	81.25'			13+69.81		6'	9'						1	1										
-L-	12+88.56	13+71.00	LT	81.25'				13+69.81	6'	9'						1	1										
-L-	14+72.19	15+53.44	RT	81.25'				14+72.19	6'	9'						1	1										
-L-	14+72.19	15+53.44	LT	81.25'			14+72.19		6'	9'						1	1										
		SUBTOTAL		325.00'																							
		LESS ANCHOR DEDUCTIONS																									
		GREU TL-3 4 x 50.00' =		-200.00'																							
		TYPE III 4 x 18.75' =		-75.00'																							
		TOTAL		50.00'												4	4										5 ADDITIONAL GUARDRAIL POSTS

SUMMARY OF EARTHWORK
IN CUBIC YARDS

LOCATION	UNCLASSIFIED EXCAVATION	UNDERCUT	EMBT+%	BORROW	WASTE
-L- 10+00.00 TO 13+69.81 (BEGIN BRIDGE)	93		281	188	
-L- 14+72.19 (END BRIDGE) TO 18+00.00	675		179		496
SUBTOTAL	768		460	188	496
WASTE IN LIEU OF BORROW				-188	-188
PROJECT TOTAL	768		460	0	308
5% TO REPLACE BORROW					
GRAND TOTAL	768			0	308
SAY	810			0	

SUMMARY OF SHOULDER BERM GUTTER

SURVEY LINE	STATION	STATION	LOCATION LT/RT/CL	LENGTH
-L-	14+83.06	14+98.00	RT	14.94'
-L-	14+83.06	14+98.00	LT	14.94'
			TOTAL:	29.88'
			SAY:	35'

NOTE: Approximate quantities only. Unclassified Excavation, Borrow Excavation, Fine Grading, Clearing and Grubbing and Removal of Existing Asphalt Pavement will be paid for at the contract Lump Sum price for "Grading".

MOTT MACDONALD
R:\Roadway\Proj\B5629_rdy_psh3B-1.dgn
10/6/2022
10/6/2022

SUB-REGIONAL & REGIONAL
LIST OF PIPES, ENDWALLS, ETC. (FOR PIPES 48" & UNDER)

STATION / SIZE / THICKNESS OR GAUGE	LOCATION (LT,RT, OR CL)	STRUCTURE NO. FROM	STRUCTURE NO. TO	TOP ELEVATION	INVERT ELEVATION	INVERT ELEVATION	SLOPE CRITICAL
14+93	LT	401	403	16.9'	11.89'	9.7'	
14+93	RT	402	404	16.9'	12.9'	12.0'	
17+02	RT	405					
TOTAL							

STATION	DRAINAGE PIPE (RCP, CSP, CAAP, HDPE, or PVC) 12"	15"	18"	24"	30"	36"	42"	48"	DO NOT USE RCP	DO NOT USE PVC	DO NOT USE CAAP	DO NOT USE HDPE
14+93												
14+93												
17+02												
TOTAL												

STATION	C.S. PIPE 12" .064	15" .064	18" .064	24" .064	36" .079	42" .109	48" .109
14+93		24'					
14+93		20'					
17+02							
TOTAL		44'					

STATION	R.C. PIPE (CLASS III) 15"	18"	24"	30"	36"	42"	48"	R.C. PIPE (CLASS IV) 12"	15"	18"	24"	30"	36"	42"	48"
14+93															
14+93															
17+02															
TOTAL															

STATION	**" R. C. PIPE (CLASS V)	**" R. C. PIPE CULVERTS, CONTRACTOR DESIGN PIPE	**" R. C. PIPE CULVERTS, CONTRACTOR DESIGN PIPE	15" SIDE DRAIN PIPE	18" SIDE DRAIN PIPE	ENDWALLS STD. 838.01, STD. 838.11 OR STD. 838.80 (UNLESS NOTED OTHERWISE) CU. YDS. R.C.P.	C.S.P.	QUANTITIES FOR DRAINAGE STRUCTURES PER EACH (0' THRU 5.0')	* TOTAL L.F. FOR PAY QUANTITY SHALL BE COL. 'A' + (1.3 X COL.'B') LIN. *FT. A 5.0' THRU 10.0'	B 10.0' AND ABOVE	C.B. STD. 840.01 OR STD. 840.02	FRAME, GRATES AND HOOD STANDARD 840.03 TYPE OF GRATE E	F	G	
14+93								1							
14+93								1							
17+02				24'											
TOTAL				24'				2							

STATION	CONCRETE TRANSITIONAL SECTION CATCH BASIN	DROP INLET		G.D.I. TYPE "B" STD. 840.18 OR 840.27	G.D.I. FRAME WITH TWO GRATES STD. 840.22	G.D.I. (N.S.) FRAME WITH TWO GRATES STD. 840.24	G.D.I. (N.S.) FRAME WITH TWO GRATES STD. 840.29	T.B.D.I. STD. 840.35	DRAINAGE PIPE ELBOWS NO. & SIZE	CONC. COLLARS CL. "B" C.Y. STD 840.72	CONC. & BRICK PIPE PLUG, C.Y. STD. 840.71	PIPE REMOVAL LIN.FT.	REMARKS
14+93							1	1					
14+93							1	1					
17+02												22'	
TOTAL							2	2				22'	

ABBREVIATIONS

C.B.	CATCH BASIN
N.D.I.	NARROW DROP INLET
D.I.	DROP INLET
G.D.I.	GRATED DROP INLET
G.D.I. (N.S.)	GRATED DROP INLET (NARROW SLOT)
J.B.	JUNCTION BOX
M.H.	MANHOLE
T.B.D.I.	TRAFFIC BEARING DROP INLET
T.B.J.B.	TRAFFIC BEARING JUNCTION BOX

NOTE: Invert Elevations are for Bid Purposes only and shall not be used for project construction stakeout.
See "Standard Specifications For Roads and Structures, Section 300–5".

MOTT MACDONALD
R:\Roadway\Proj\B5629_rdy_psh3D-1.dgn
10/6/2022
10/6/2022

COMPUTED BY: Tyler Bottoms DATE: 10/7/21 .	(12-17-19)	PROJECT NO.	SHEET NO.
CHECKED BY: Jinyoung Park DATE: 10/11/21		B-5629	3G-1

STATE OF NORTH CAROLINA
DIVISION OF HIGHWAYS

SUMMARY OF SUBSURFACE DRAINAGE

LINE	Station	Station	Location LT/RT/CL	Drain Type* UD/BD/SD	LF
CONTINGENCY					200
				TOTAL LF:	200

*UD = Underdrain
*BD = Blind Drain
*SD = Subsurface Drain

SUMMARY OF GEOTEXTILE FOR PAVEMENT STABILIZATION

LINE	Station	Station	Geotextile for Pavement Stabilization SY	Class IV Subgrade Stabilization TONS
CONTINGENCY				
		TOTAL SY/TONS:	0	0*

*Total tons of "Class IV Subgrade Stabilization" is only the estimated quantity for pavement stabilization and may only represent a portion of the subgrade stabilization quantity shown in the Item Sheets of the Proposal.

SUMMARY OF AGGREGATE SUBGRADE/STABILIZATION

LINE	Station	Station	Aggregate Type* ASU(1/2)/ AST	Aggregate Thickness INCHES [8" for ASU(2)]	Shallow Undercut CY	Class IV Subgrade Stabilization TONS	Geotextile for Soil Stabilization SY	Stabilizer Aggregate TONS	Class IV Aggregate Stabilization TONS
CONTINGENCY									
			TOTAL CY/TONS/SY:		0	0**	0**	0	0

*ASU(1/2) = Aggregate Subgrade (Type 1 or 2)
*AST = Aggregate Stabilization
**Total tons of "Class IV Subgrade Stabilization" and total square yards of "Geotextile for Soil Stabilization" are only the estimated quantities for ASU(1/2)/AST and may only represent a portion of the subgrade stabilization and geotextile quantities shown in the Item Sheets of the Proposal.

SUMMARY OF ROCK PLATING

LINE	Beginning Slope (H:V)	Approx. Station	Ending Slope (H:V)	Approx. Station	Location LT/RT	Rock Plating Detail No. 1/2/3/4	Riprap Class* 1/2/B	Rock Plating SY
							TOTAL SY:	0

*Use Class 1, 2 or B riprap if riprap class is not shown for rock plating location.

SUMMARY OF REINFORCED SOIL SLOPES AND SLOPE EROSION CONTROL

LINE	Beginning Slope/ RSS (H:V)	Approx. Station	Ending Slope/ RSS (H:V)	Approx. Station	Location LT/RT	Reinforced Soil Slope (RSS) SY	Geocells SY	Coir Fiber Mat SY	Matting for Erosion Control SY
					TOTAL SY:	0	0	0*	0**

*Total square yards of "Coir Fiber Mat" is only the estimated quantity for slopes steeper than 2:1 (H:V) and may only represent a portion of the coir fiber mat quantity shown in the Item Sheets of the Proposal.
**Total square yards of "Matting for Erosion Control" is only the estimated quantity for RSS and may only represent a portion of the matting quantity shown in the Item Sheets of the Proposal.

SUMMARY OF PRE-SPLITTING OF ROCK

LINE	Beginning Rock Cut Slope (H:V)	Approx. Station	Ending Rock Cut Slope (H:V)	Approx. Station	Location LT/RT	Pre-splitting of Rock SY
					TOTAL SY:	0

SUMMARY OF HORIZONTAL DRAINS

LINE	Approximate Station	Location LT/RT	Elevation Above or Below Grade (+/-) FT	Inclination Angle DEGREES	PVC Pipe Schedule 40/80 or NO PIPE	Horizontal Drain FT	Horizontal Drain W/O Pipe FT
CONTINGENCY							
					TOTAL FT:	0	0

SUMMARY OF SETTLEMENT GAUGES

Gauge No.	LINE and Station	Offset	
		Distance FT	Direction LT/RT
	TOTAL GAUGES (EACH):		

SUMMARY OF SURCHARGES AND SURCHARGE WAITING PERIODS

LINE	Station	Station	Surcharge Height FT	MONTHS

SUMMARY OF EMBANKMENT WAITING PERIODS

LINE	Station	Station	MONTHS

SUMMARY OF BRIDGE WAITING PERIODS

Bridge Description	End Bent/ Bent No.	MONTHS

DocuSign Envelope ID: 728B8B88-00F8-48B6-99FD-74E74A191FAF

PROJECT REFERENCE	SHEET NO.
B-5629	4

ROADWAY DESIGN ENGINEER	HYDRAULICS ENGINEER
NORTH CAROLINA PROFESSIONAL SEAL 21102	NORTH CAROLINA PROFESSIONAL SEAL 21162
Digitally signed by JAMES CAROLINE CRAWFORD III, PE, DOTH, ROADWAY DESIGN 1/24/2023	Digitally signed by WILLIAM RUBERT TURNBLOW, PE, DOTH, HYDRAULICS 1/24/2023
MOTT MACDONALD I & E, LLC LICENSE NO. F-0669	MOTT MACDONALD I & E, LLC LICENSE NO. F-0669

DOCUMENT NOT CONSIDERED FINAL UNLESS ALL SIGNATURES COMPLETED

Prepared in the Office of: MOTT MACDONALD
7621 Parfay Road, Suite 115
Fuquay-Varina, NC 27526
www.mottmac.com

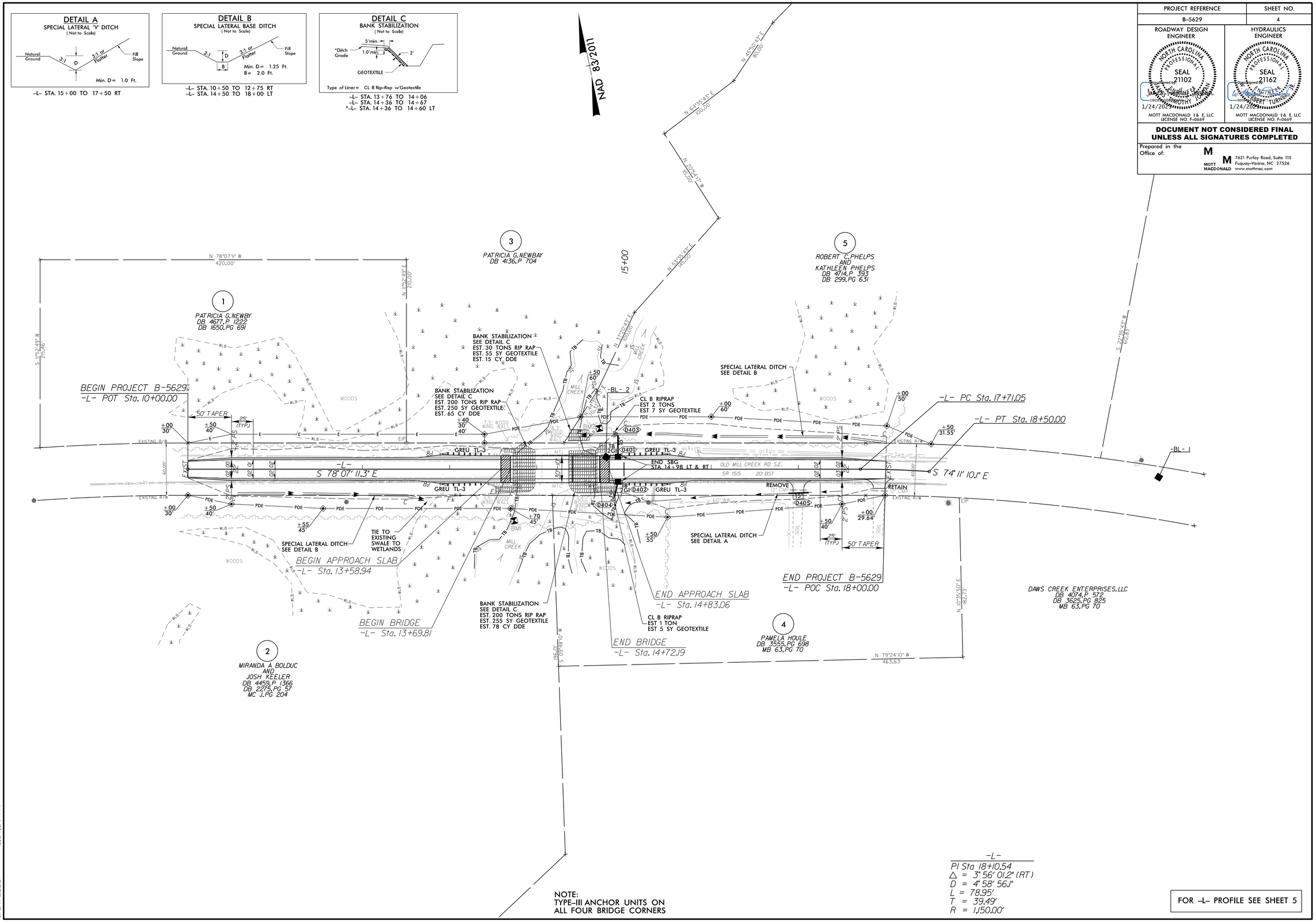

NOTE:
TYPE-III ANCHOR UNITS ON
ALL FOUR BRIDGE CORNERS

-L-
PI Sta 18+10.54
△ = 3° 56' 01.2" (RT)
D = 4° 58' 56.1"
L = 78.95'
T = 39.49'
R = 1,150.00'

FOR -L- PROFILE SEE SHEET 5

default
R:\Roadway\Proj\B5629_rdy_psh.dgn
1/24/2023
3:54:59 PM

DocuSign Envelope ID: 728B8B88-00F8-48B6-99FD-74E74A191FAF

PROJECT REFERENCE	SHEET NO.
B-5629	5

ROADWAY DESIGN ENGINEER
NORTH CAROLINA PROFESSIONAL SEAL 21102 ENGINEER JAMES TIMOTHY LORDAN
Docu Signed by: 1/24/2023
MOTT MACDONALD I & E, LLC LICENSE NO. F-0669

HYDRAULICS ENGINEER
NORTH CAROLINA PROFESSIONAL SEAL 21162 ENGINEER W. WILBERT TURNER, JR.
Docu Signed by: 1/24/2023
MOTT MACDONALD I & E, LLC LICENSE NO. F-0669

DOCUMENT NOT CONSIDERED FINAL UNLESS ALL SIGNATURES COMPLETED

Prepared in the Office of: MOTT MACDONALD 7621 Purfoy Rd., Suite 115 Fuquay-Varina, NC 27526 www.mottmac.com

VERTICAL SCALE 5' 0 5' 10'
HORIZONTAL SCALE 25' 0 25' 50'

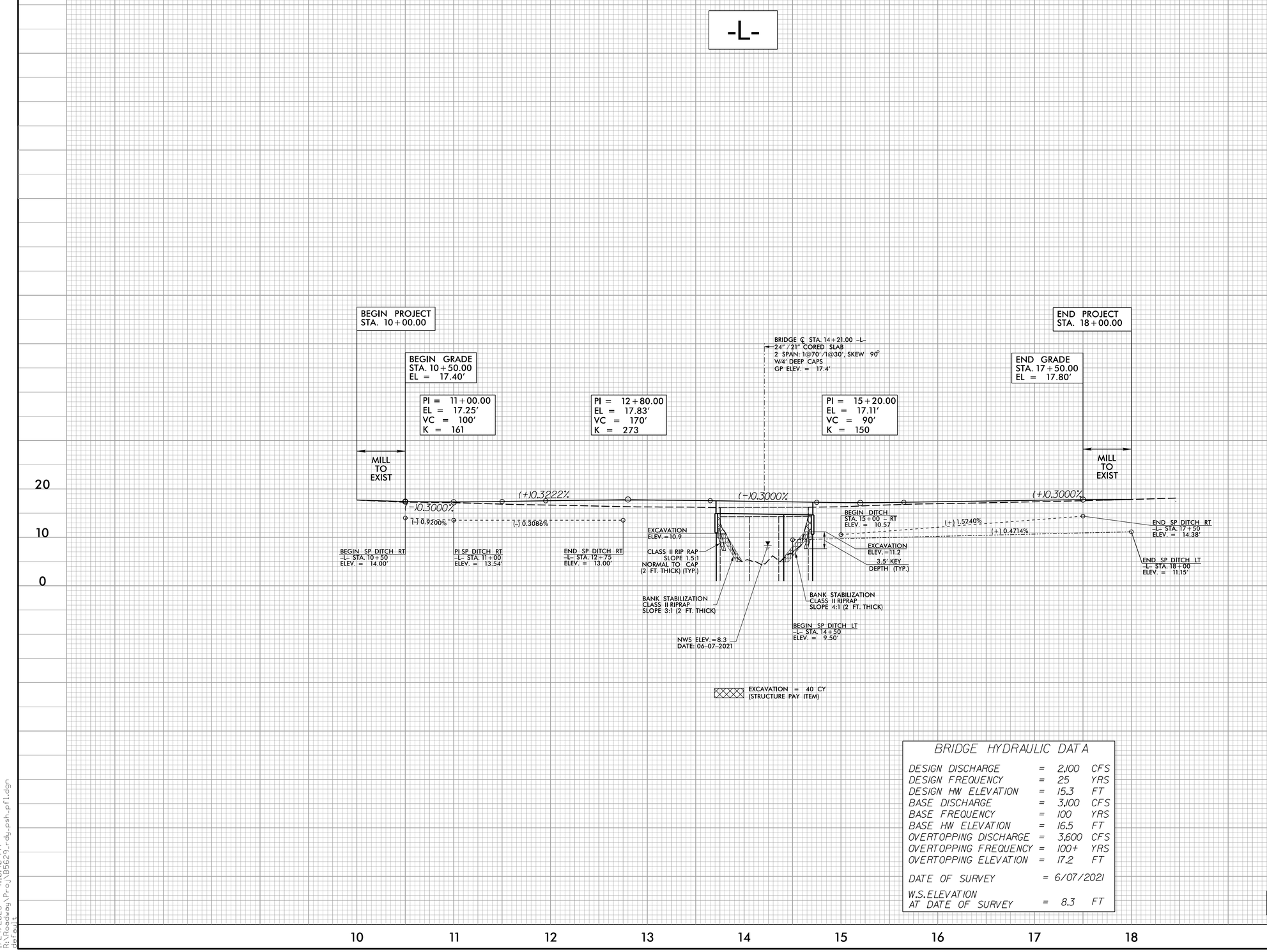

BRIDGE HYDRAULIC DATA

DESIGN DISCHARGE	=	2,100	CFS
DESIGN FREQUENCY	=	25	YRS
DESIGN HW ELEVATION	=	15.3	FT
BASE DISCHARGE	=	3,100	CFS
BASE FREQUENCY	=	100	YRS
BASE HW ELEVATION	=	16.5	FT
OVERTOPPING DISCHARGE	=	3,600	CFS
OVERTOPPING FREQUENCY	=	100+	YRS
OVERTOPPING ELEVATION	=	17.2	FT
DATE OF SURVEY	=	6/07/2021	
W.S. ELEVATION AT DATE OF SURVEY	=	8.3	FT

FOR -L- PLAN SEE SHEET 4

1/24/2023 4:10:40 PM
R:\Roadway\Proj\B5629_rdy_psh_pfl.dgn
default

STATE	STATE PROJECT REFERENCE NO.	SHEET NO.	TOTAL SHEETS
N.C.	B-5629	RW01	05

TIP PROJECT: B-5629

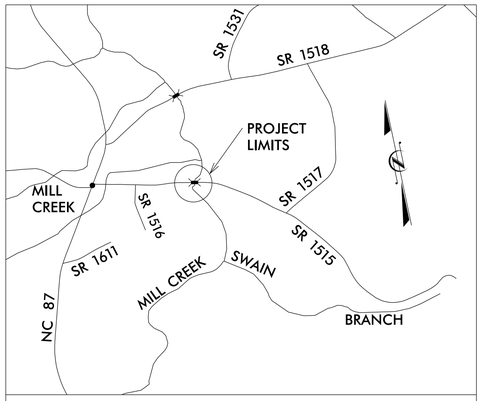

VICINITY MAP

STATE OF NORTH CAROLINA
DIVISION OF HIGHWAYS

SURVEY CONTROL, EXISTING CENTERLINES,
RIGHT OF WAY, EASEMENTS AND PROPERTY TIES

BRUNSWICK COUNTY

BRIDGE NO. 40 OVER MILL CREEK ON SR 1515 (OLD MILL CREEK ROAD SE)

4

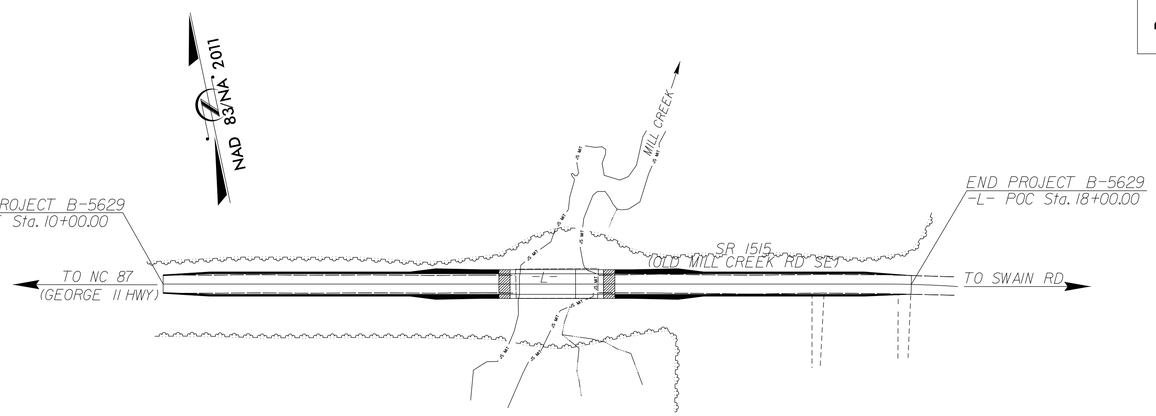

GRAPHIC SCALE
FOR RW04

50 25 0 50 100
PLANS

DATUM DESCRIPTION

THE LOCALIZED COORDINATE SYSTEM DEVELOPED FOR THIS PROJECT
IS BASED ON THE STATE PLANE COORDINATES ESTABLISHED BY
NCGS FOR MONUMENT "GPS1"
WITH NAD 83/NSRS 2011 STATE PLANE GRID COORDINATES OF
NORTHING: 125,696.612(ft) EASTING: 2,280,776.978(ft)
ELEVATION: 29.51(ft)
THE AVERAGE COMBINED GRID FACTOR USED ON THIS PROJECT
(GROUND TO GRID) IS: 1.000079989998
THE N.C. LAMBERT GRID BEARING AND
LOCALIZED HORIZONTAL GROUND DISTANCE FROM
"GPS1" TO -L- STATION 10+00.00 IS
N 68-29'48.6" W 2075.89(ft)
ALL LINEAR DIMENSIONS ARE LOCALIZED HORIZONTAL DISTANCES
VERTICAL DATUM USED IS NAVD 88

Prepared in the Office of:

LOCATION AND SURVEYS UNIT
DIVISION 3
5310 BARBADOS BLVD, SUITE 102
CASTLE HAYNE, N.C., 28429

2018 STANDARD SPECIFICATIONS

RIGHT OF WAY DATE:	LETTING DATE:
FEBUARY 25, 2022	MARCH 16, 2023

PROFESSIONAL LAND SURVEYOR

NORTH CAROLINA PROFESSIONAL SEAL L-4526 LAND SURVEYOR CHRISTOPHER J. SAWYER

DocuSigned by: 02/02/2023
SIGNATURE: Date:

STATE OF NORTH CAROLINA DEPARTMENT OF TRANSPORTATION

09/08/99

3I-JAN-2023 12:29
S:\Units\Div03\Projects\BRIDGE\Brunswick\B-5629_EDB_0040\Working\150 series sheet\B5629_LS_RW01_230131.dgn
mjduval AT LS-32872SL

SURVEY CONTROL SHEET

W/ EXISTING CENTERLINE ALIGNMENTS PRIOR TO CONSTRUCTION

PROJECT REFERENCE NO.	SHEET NO.
B-5629	RW02C-1

Location and Surveys

LOCATION AND SURVEYS UNIT
DIVISION 3
5310 BARBADOS BLVD., SUITE 102
CASTLE HAYNE, N.C., 28419

PROJECT SURVEYOR

NORTH CAROLINA PROFESSIONAL SEAL L-4526 LAND SURVEYOR CHRISTOPHER J. SAWYER

DOCUMENT NOT CONSIDERED FINAL UNLESS ALL SIGNATURES COMPLETED

NC GRID
NAD 83 NSRS 2011

```
**************************************
BM1       ELEVATION = 14.07
N 126323      E 2279199
BL STATION 11+99 66 RIGHT
BM IN 12"" OAK"
**************************************
**************************************
BM2       ELEVATION = 14.14
N 126406      E 2279317
BL STATION 13+03 33 LEFT
BM IN 24"" CYPRESS"
**************************************
```

I, CHRISTOPHER J. SAWYER, PLS, certify that the Project Control was performed under my supervision from an actual GPS survey made under my supervision and the following information was used to perform the survey:

Class of survey: ***AA***
Type of GPS field procedure: RTN
Dates of survey: APRIL 26, 2016
Datum/Epoch: NAD 83/NSRS 2011
Published/Fixed-control use: N/A FOR RTN
Localized around: "GPS1"
Northing: 125696.612
Easting: 2280776.978
Combined grid factor: 1.000079989998
Geoid model: G12NC
Units: US SURVEY FEET

I also certify that the Baseline Control for this project was completed under my direct and responsible charge from an actual survey made under my supervision; that all horizontal closures had a minimum ratio of precision of 1:20,000 (Class AA) and Vertical accuracy to Class A. Field work was performed APRIL 26, 2016 , and all coordinates are based on NAD 83/NSRS2011 and all elevations are based on NAVD 88; that this survey was performed to meet the requirements of 21NCAC 56.1600 as applicable.

This 10TH day of August, 2022.

DocuSigned by:
Christopher J. Sawyer
9700CB2E1D21467...

Professional Land Surveyor L-4526

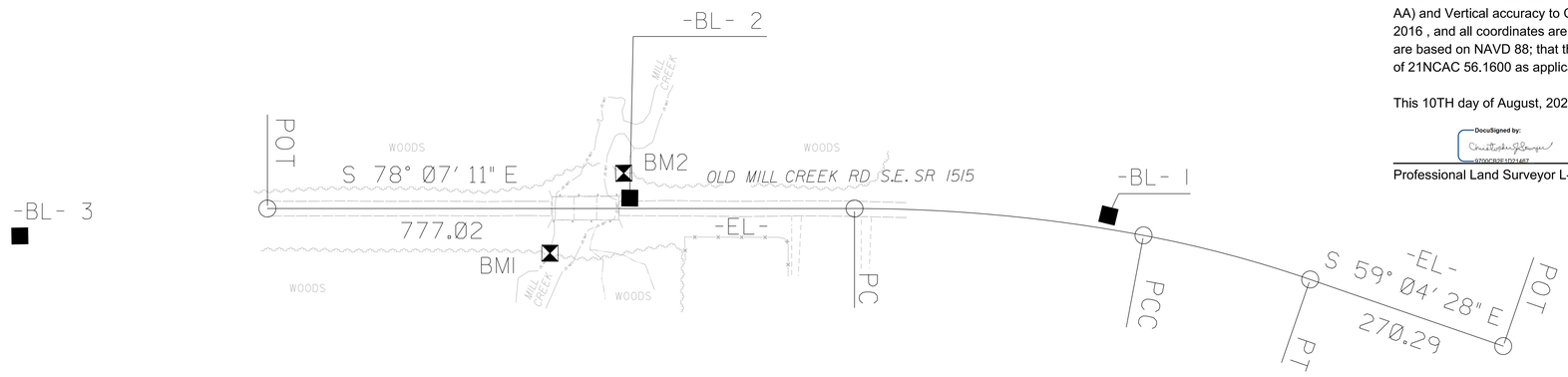

BL

POINT	DESC.	NORTH	EAST	ELEVATION
BL3	TRV CAP & REBAR	126489.4150	2278517.4230	21.89
BL2	TRV CAP & REBAR	126372.2330	2279317.7100	15.57
BL1	TRV CAP & REBAR	126219.3720	2279932.8440	21.45
GPS1	GPS CAP & REBAR	125696.6120	2280776.9780	29.51
GPS2	GPS CAP & REBAR	125178.6110	2281516.2630	32.97

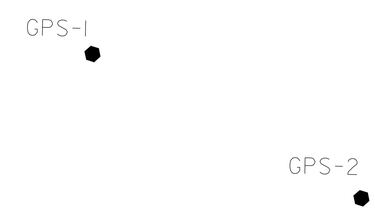

EL

POINT	N	E	BEARING	DIST	DELTA	D	L	T	R
POT	126457.535	2278845.578							
LINE			S 78°07'11.3" E	777.02					
PC	126297.572	2279605.956							
CURVE			S 72°48'58.1" E	384.13	10°36'26.4"(RT)	02°45'26.7"	384.68	192.89	2077.87
PCC	126184.084	2279972.941							
CURVE			S 63°17'36.7" E	228.18	08°26'16.5"(RT)	03°41'40.4"	228.39	114.40	1550.82
PT	126081.535	2280176.780							
LINE			S 59°04'28.5" E	270.29					
POT	125942.629	2280408.642							

NOTES:

1. PROJECT CONTROL WAS ESTABLISHED USING GNSS, THE GLOBAL NAVIGATION SATELLITE SYSTEM.

2. THE SURVEY CONTROL DATA FOR THIS PROJECT HAS BEEN COMPILED FROM VARIOUS SOURCES. IF FURTHER INFORMATION REGARDING PROJECT CONTROL IS NEEDED, PLEASE CONTACT THE LOCATION AND SURVEYS UNIT.

6/2/99
04-OCT-2022 13:19
S:\Units\Div03\Projects\BRIDGE\Brunswick\B-5629_EDB_0040\Working\150 series sheet\b5629_LS_RW02C-1_220803.dgn
mjduval AT LS-328725L

PROPOSED ALIGNMENT CONTROL SHEET

PROJECT REFERENCE NO.	SHEET NO.
B-5629	RW02D-1

Location and Surveys

LOCATION AND SURVERYS UNIT
DIVISION 3
5310 BARBADOS BLVD., SUITE 102
CASTLE HAYNE, N.C., 28429

PROJECT SURVEYOR

NORTH CAROLINA PROFESSIONAL SEAL L-4526 LAND SURVEYOR CHRISTOPHER J. SAWYER

DOCUMENT NOT CONSIDERED FINAL UNLESS ALL SIGNATURES COMPLETED

I, CHRISTOPHER J. SAWYER, PLS, certify that the data compiled came from available surveys/mapping performed by others and provided to me by NCDOT and do not certify to the accuracy or quality of the individual data sources.

This 10TH day of August, 2022.

DocuSigned by:
Christopher J. Sawyer
9700C82E1D21467...

Professional Land Surveyor L-4526

L

TYPE	STATION	NORTH	EAST
POT	10+00.00	126457.5346	2278845.5776
PC	17+71.05	126298.8024	2279600.1081
PT	18+50.00	126279.9100	2279676.7524

NOTES:

1. PROJECT CONTROL WAS ESTABLISHED USING GNSS, THE GLOBAL NAVIGATION SATELLITE SYSTEM.

2. THE PROPOSED ALIGNMENT CONTROL DATA FOR THIS PROJECT HAS BEEN COMPILED FROM VARIOUS SOURCES. IF FURTHER INFORMATION REGARDING PROJECT CONTROL IS NEEDED, PLEASE CONTACT THE LOCATION AND SURVEYS UNIT.

REVISIONS

6/2/99

03-AUG-2022 10:04
S:\Units\Div03\Projects\BRIDGE\Brunswick\B-5629_EDB_0040\Working\150 series sheet\B5629_LS_RW02D-1_220803.dgn
mjduval AT LS-299896

RIGHT OF WAY CONTROL SHEET

PROJECT REFERENCE NO.	SHEET NO.
B-5629	RW03E-1

Location and Surveys

LOCATION AND SURVEYS UNIT
DIVISION 3
5310 BARBADOS BLVD., SUITE 102
CASTLE HAYNE, N.C., 28429

PROJECT SURVEYOR

NORTH CAROLINA PROFESSIONAL SEAL L-4526 LAND SURVEYOR CHRISTOPHER J. SAWYER

DOCUMENT NOT CONSIDERED FINAL UNLESS ALL SIGNATURES COMPLETED

I , CHRISTOPHER J. SAWYER , certify that the right of way and permanent easement monumentation for this project shown herein was completed under my direct and responsible charge from an actual survey made under my supervision; that all horizontal closures had a minimum ratio of precision of 1:10,000 (Class A). Field work was performed from APRIL 17, 2022, and all coordinates are based on NAD83/2011; That this survey was performed to meet the requirements of 21NCAC 56.1600 as applicable.

This 10TH day of August, 2022.

DocuSigned by:
Christopher J. Sawyer
C39D0B5C4C1A43...

Professional Land Surveyor L-4526

ROW MARKER IRON PIN AND CAP

ALIGN	STATION	OFFSET	NORTH	EAST
L	17+77.18	29.98	126268.2148	2279599.7800
L	17+76.87	-30.12	126326.9296	2279612.1319

ROW MARKER PERMANENT EASEMENT

ALIGN	STATION	OFFSET	NORTH	EAST
L	10+00.00	30.00	126428.1772	2278839.4016
L	10+50.00	40.00	126408.0981	2278886.2720
L	11+55.00	45.00	126381.5892	2278987.9936
L	13+40.00	-30.00	126416.8975	2279184.4709
L	13+40.00	-40.00	126426.6833	2279186.5296
L	13+70.00	45.00	126337.3280	2279198.3883
L	14+50.00	-60.00	126423.6097	2279298.2907
L	15+50.00	55.00	126290.4863	2279372.4741
L	16+00.00	-60.00	126392.7298	2279445.0777
L	17+50.00	40.00	126263.9918	2279571.2781
L	18+00.00	-50.00	126341.1401	2279639.8856
L	18+00.00	29.64	126263.6387	2279621.5325
L	18+50.00	-31.55	126310.2628	2279685.3493

NOTES:

1. IF FURTHER INFORMATION REGARDING PROJECT CONTROL IS NEEDED PLEASE CONTACT THE LOCATION AND SURVEYS UNIT.
2. PROJECT CONTROL WAS ESTABLISHED USING GNSS, THE GLOBAL NAVIGATION SATELLITE SYSTEM.
3. RIGHT OF WAY MONUMENTATION ESTABLISHED APRIL 17, 2022.

REVISIONS

6/2/99

04-OCT-2022 13:24
S:\Units\Projects\BRIDGE\Brunswick\B-5629_EDB_0040\Working\150 series sheet\B5629_LS_RW03E-1_220803.dgn
mduval A1_LS_287251

PROJECT REFERENCE NO.	SHEET NO.
B-5629	RW04

Location and Surveys

LOCATION AND SURVERYS UNIT
DIVISION 3
5310 BARBADOS BLVD., SUITE 102
CASTLE HAYNE, N.C., 28429

PROJECT SURVEYOR

NORTH CAROLINA PROFESSIONAL SEAL L-4526 LAND SURVEYOR CHRISTOPHER J. SAWYER

DOCUMENT NOT CONSIDERED FINAL UNLESS ALL SIGNATURES COMPLETED

I , CHRISTOPHER J. SAWYER , certify that the right of way and permanent easement monumentation for this project shown herein was completed under my direct and responsible charge from an actual survey made under my supervision; that all horizontal closures had a minimum ratio of precision of 1:10,000 (Class A). Field work was performed from APRIL 17, 2022, and all coordinates are based on NAD83/2011; That this survey was performed to meet the requirements of 21NCAC 56.1600 as applicable.

This 10TH day of August, 2022.

DocuSigned by:

Professional Land Surveyor L-4526

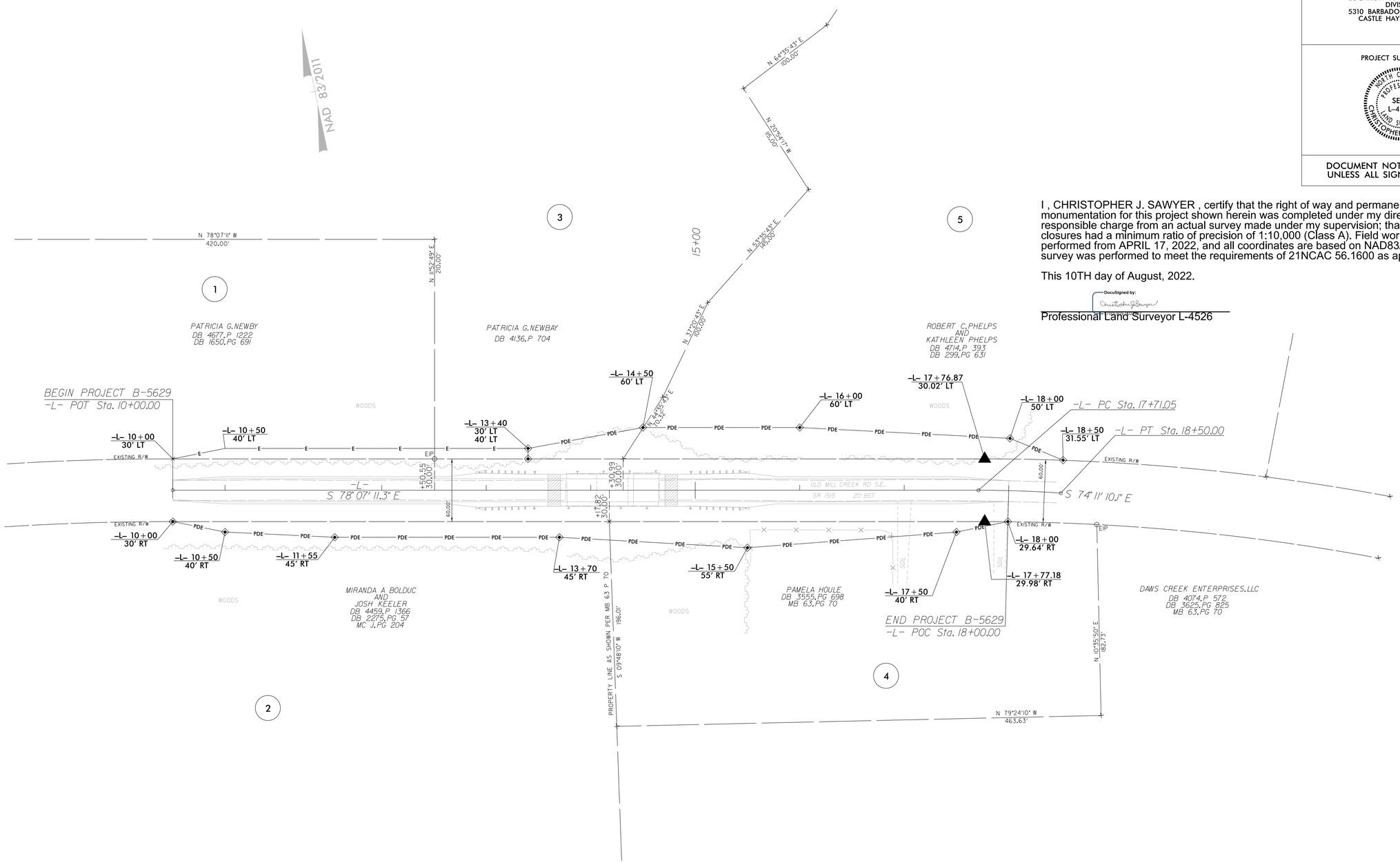

NOTES:

1. IF FURTHER INFORMATION REGARDING PROJECT CONTROL IS NEEDED PLEASE CONTACT THE LOCATION AND SURVEYS UNIT.
2. PROJECT CONTROL WAS ESTABLISHED USING GNSS, THE GLOBAL NAVIGATION SATELLITE SYSTEM.
3. RIGHT OF WAY MONUMENTATION ESTABLISHED APRIL 17, 2022.

REVISIONS

6/2/99

03-AUG-2022 13:18
S:\Units\Div03\Projects\BRIDGE\Brunswick\B-5629_EDB_0040\Working\150 series sheet\B5629_LS_RW04_220803.dgn
mjduvo AT S-299896

DocuSign Envelope ID: 8F480384-7B2B-48EF-A67D-80D5618ED3AA

STATE OF NORTH CAROLINA
DIVISION OF HIGHWAYS

TRANSPORTATION MANAGEMENT PLAN

BRUNSWICK COUNTY

LOCATION: BRIDGE NO. 40 OVER MILL CREEK ON SR 1515 (OLD MILL CREEK ROAD SE)

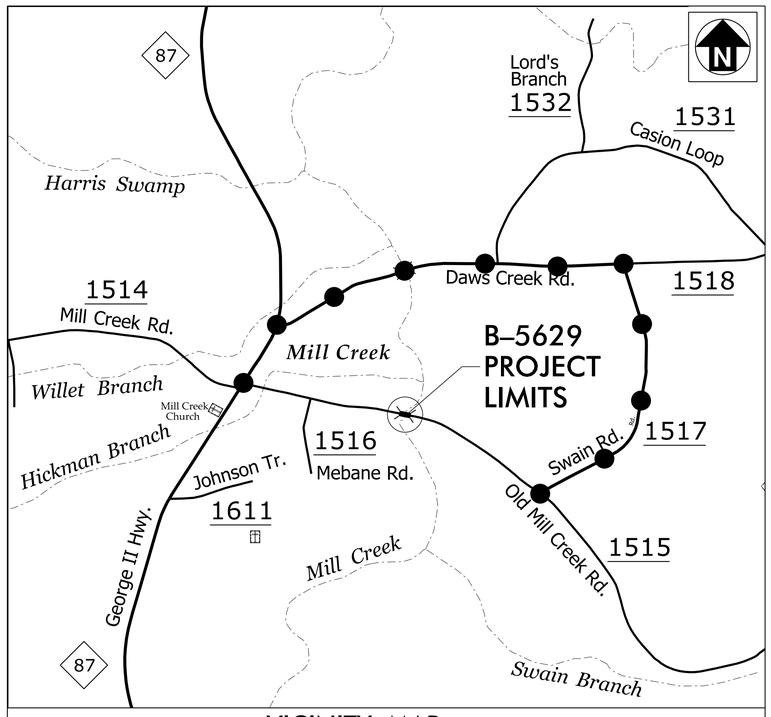

VICINITY MAP
(NOT TO SCALE)
OFF–SITE DETOUR

INDEX OF SHEETS

SHEET NO.	TITLE
TMP-1	TITLE SHEET, VICINITY MAP, AND INDEX OF SHEETS
TMP-2	LIST OF APPLICABLE ROADWAY STANDARD DRAWINGS, TRANSPORTATION OPERATIONS PLAN, & TEMPORARY TRAFFIC CONTROL PHASING
TMP-3	SPECIAL SIGN DESIGN
TMP-4 & 5	TEMPORARY TRAFFIC CONTROL DETOUR

SHEET NO.
TMP–1

B–5629

TIP PROJECT:

DOCUMENT NOT CONSIDERED FINAL UNLESS ALL SIGNATURES COMPLETED

WORK ZONE SAFETY & MOBILITY
"from the MOUNTAINS to the COAST"

PLANS PREPARED FOR THE NCDOT BY:
MOTT MACDONALD
MOTT MACDONALD I & E, LLC
1101 HAYNES STREET, SUITE 101
RALEIGH, NC 27604
NC LICENSE NO. F–0669

LORI D. STOUCHO, PE
SENIOR PROJECT ENGINEER

NCDOT CONTACTS:

DEREK PIELECH, PE
NCDOT CONTACT
DIVISION BRIDGE
PROGRAM MANAGER

DIVISION OF HIGHWAYS
STATE OF NORTH CAROLINA
DEPARTMENT OF TRANSPORTATION
WORK ZONE TRAFFIC CONTROL

APPROVED: DocuSigned by: Lori D. Stouchho FF586C7596C645A...

DATE: 10/11/2022

SEAL

NORTH CAROLINA PROFESSIONAL SEAL 034437 ENGINEER LORI D. STOUCHO

9/22/2022
G:\366995_2017_NCDOT_BridgeDesign_LSA\Proj\B-5629\Traffic\TrafficControl\TCP\200.005_B-5629_TC_TMP-01.dgn
User:S10862271

DocuSign Envelope ID: 8F480384-7B2B-48EF-A67D-80D5618ED3AA

PROJ. REFERENCE NO.	SHEET NO.
B-5629	TMP-2

PLANS PREPARED FOR THE NCDOT BY:
MOTT MACDONALD
MOTT MACDONALD I & E, LLC
1101 HAYNES STREET, SUITE 101
RALEIGH, NC 27604
NC LICENSE NO. F-0669

ROADWAY STANDARD DRAWINGS

THE FOLLOWING ROADWAY STANDARDS AS SHOWN IN "ROADWAY STANDARD DRAWINGS" - N.C. DEPARTMENT OF TRANSPORTATION - RALEIGH, N.C., DATED JANUARY 2018 ARE APPLICABLE TO THIS PROJECT AND BY REFERENCE HEREBY ARE CONSIDERED A PART OF THESE PLANS:

STD. NO.	TITLE
1101.03	TEMPORARY ROAD CLOSURES
1101.05	WORK ZONE VEHICLE ACCESSES
1101.11	TRAFFIC CONTROL DESIGN TABLES
1110.01	STATIONARY WORK ZONE SIGNS
1145.01	BARRICADES

GENERAL NOTES

CHANGES MAY BE REQUIRED WHEN PHYSICAL DIMENSIONS IN THE DETAIL DRAWINGS, STANDARD DETAILS, AND ROADWAY DETAILS ARE NOT ATTAINABLE TO MEET FIELD CONDITIONS OR RESULT IN DUPLICATE OR UNDESIRED OVERLAPPING OF DEVICES. MODIFICATION MAY INCLUDE: MOVING, SUPPLEMENTING, COVERING, OR REMOVAL OF DEVICES AS DIRECTED BY THE ENGINEER.

THE FOLLOWING GENERAL NOTES APPLY AT ALL TIMES FOR THE DURATION OF THE CONSTRUCTION PROJECT EXCEPT WHEN OTHERWISE NOTED IN THE PLAN OR DIRECTED BY THE ENGINEER.

TRAFFIC PATTERN ALTERATIONS

A) NOTIFY THE ENGINEER THIRTY (30) CALENDAR DAYS PRIOR TO ANY TRAFFIC PATTERN ALTERATION.

SIGNING

B) PROVIDE SIGNING AND DEVICES REQUIRED TO CLOSE THE ROAD ACCORDING TO THE ROADWAY STANDARD DRAWINGS AND TRAFFIC CONTROL PLANS.

PROVIDE SIGNING REQUIRED FOR THE OFF-SITE DETOUR ROUTE AS SHOWN IN THE TRAFFIC CONTROL PLANS.

C) COVER OR REMOVE ALL SIGNS AND DEVICES REQUIRED TO CLOSE THE ROAD WHEN ROAD CLOSURE IS NOT IN OPERATION.

COVER OR REMOVE ALL SIGNS REQUIRED FOR THE OFF-SITE DETOUR WHEN THE DETOUR IS NOT IN OPERATION.

D) ENSURE ALL NECESSARY SIGNING IS IN PLACE PRIOR TO ALTERING ANY TRAFFIC PATTERN.

TRAFFIC CONTROL DEVICES

E) PLACE TYPE III BARRICADES, WITH "ROAD CLOSED" SIGN R11-2 ATTACHED, OF SUFFICIENT LENGTH TO CLOSE ENTIRE ROADWAY.

PAVEMENT MARKINGS AND MARKERS

F) TIE PROPOSED PAVEMENT MARKING LINES TO EXISTING PAVEMENT MARKING LINES.

LOCAL NOTES

1. NOTIFY BRUNSWICK COUNTY SCHOOL TRANSPORTATION (910-253-2880) AND BRUNSWICK COUNTY EMERGENCY SERVICES (910-253-5383) AT LEAST ONE MONTH PRIOR TO ROAD CLOSURE.

PHASING

STEP 1: USING RSD 1101.03, SHEET 1 OF 9, AND SHEETS TMP-4 AND TMP-5, PLACE TEMPORARY DETOUR SIGNS AND COVER

STEP 2: UNCOVER TEMPORARY DETOUR SIGNS AND CLOSE -L- TO TRAFFIC

STEP 3: CONSTRUCT -L- AND PROPOSED STRUCTURE

PLACE FINAL PAVEMENT MARKINGS ON -L-

STEP 4: REMOVE ALL TEMPORARY TRAFFIC CONTROL DEVICES AND OPEN -L- TO TRAFFIC

APPROVED: DocuSigned by: Lori D. Stouchko FF586C7596C645A...

DATE: 10/11/2022

NORTH CAROLINA PROFESSIONAL SEAL 034437 ENGINEER LORI D. STOUCHKO

DOCUMENT NOT CONSIDERED FINAL UNLESS ALL SIGNATURES COMPLETED

DIVISION OF HIGHWAYS STATE OF NORTH CAROLINA DEPARTMENT OF TRANSPORTATION WORK ZONE TRAFFIC CONTROL

ROADWAY STANDARD DRAWINGS, TRANSPORATION OPERATIONS PLAN, & TEMPORARY TRAFFIC CONTROL PHASING

9/22/2022
G:\386695_2017_NCDOT_BridgeDesign_LSA\Proj\B-5629\Traffic\TrafficControl\TCP\200_010_B-5629_TC_TMP-02.dgn
User:ST086227

DocuSign Envelope ID: 8F480384-7B2B-48EF-A67D-80D5618ED3AA

PROJ. REFERENCE NO.	SHEET NO.
B-5629	TMP-3

PLANS PREPARED FOR THE NCDOT BY:

MOTT MACDONALD
MOTT MACDONALD I & E, LLC
1101 HAYNES STREET, SUITE 101
RALEIGH, NC 27604
NC LICENSE NO. F-0669

SIGN NUMBER: SP-1
TYPE: STATIONARY
QUANTITY: SEE PLANS

SIGN WIDTH: 3'-6"
HEIGHT: 2'-6"
TOTAL AREA: 8.8 Sq.Ft.

BORDER TYPE: INSET
RECESS: 0.38"
WIDTH: 0.63"
RADII: 1.5"

NO. Z BARS:
LENGTH:

BACKG COLOR: Fluorescent Orange
COPY COLOR: Black

SYMBOL	X	Y	WID	HT

MAT'L: 0.080" (2.0 mm) ALUMINUM

USE NOTES: 1,2

1. Legend and border shall be direct applied black non-reflective sheeting.
2. Background shall be NC GRADE B fluorescent orange retroreflective sheeting.

DESIGN BY: S COLEMAN
PROJECT ID: B-5629

CHECKED BY: D. BISSETTE
LOCATION:

JUNE 28, 2022
DIV: 3

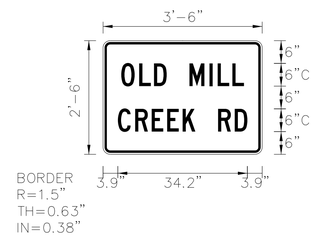

Spacing Factor is 1 unless specified otherwise

LETTER POSITIONS

Letter spacings are to start of next letter

																										Series/Size Text Length
	O	L	D		M	I	L	L																		C 2000
4.8	4.7	3.9	3.4	6	5.3	2.2	3.9	3.1	4.8																	32.4
	C	R	E	E	K		R	D																		C 2000
3.9	4.6	4.4	4.1	4.1	3.4	6	4.4	3.4	3.9																	34.2

FILENAME: B-5629_TC_TMP_Sign

NORTH CAROLINA D.O.T. SIGN DETAIL

APPROVED: DocuSigned by: Lori D. Stouchko FF586C7596C645A...

DATE: 10/11/2022

NORTH CAROLINA PROFESSIONAL SEAL 034437 ENGINEER LORI D. STOUCHKO

DOCUMENT NOT CONSIDERED FINAL UNLESS ALL SIGNATURES COMPLETED

DIVISION OF HIGHWAYS STATE OF NORTH CAROLINA DEPARTMENT OF TRANSPORTATION WORK ZONE TRAFFIC CONTROL

TEMPORARY TRAFFIC CONTROL
SPECIAL SIGN DESIGN

9/22/2022
G:\386695.2017_NCDOT_BridgeDesign_LSA\Proj\B-5629\Traffic\TrafficControl\TCP\200.015_B-5629_TC_TMP-03.dgn
User:ST086227

DocuSign Envelope ID: 8F480384-7B2B-48EF-A67D-80D5618ED3AA

PROJ. REFERENCE NO.	SHEET NO.
B-5629	TMP-4

PLANS PREPARED FOR THE NCDOT BY:

MOTT MACDONALD

MOTT MACDONALD I & E, LLC
1101 HAYNES STREET, SUITE 101
RALEIGH, NC 27604
NC LICENSE NO. F-0669

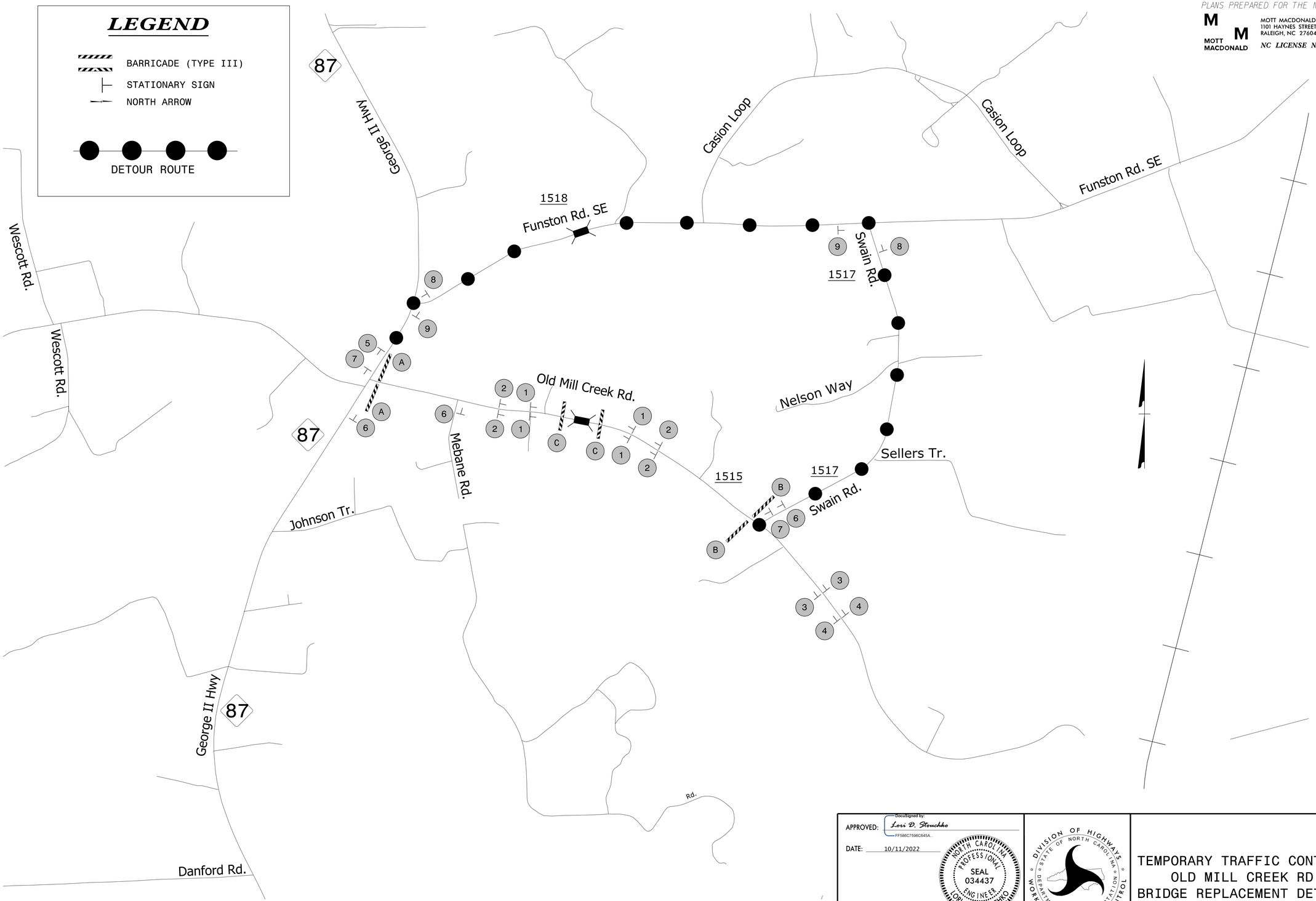

APPROVED: DocuSigned by: Lori D. Stouchko FF586C7596C645A...

DATE: 10/11/2022

NORTH CAROLINA PROFESSIONAL SEAL 034437 ENGINEER LORI D. STOUCHKO

DOCUMENT NOT CONSIDERED FINAL UNLESS ALL SIGNATURES COMPLETED

DIVISION OF HIGHWAYS STATE OF NORTH CAROLINA DEPARTMENT OF TRANSPORTATION WORK ZONE TRAFFIC CONTROL

TEMPORARY TRAFFIC CONTROL
OLD MILL CREEK RD
BRIDGE REPLACEMENT DETOUR

9/22/2022
G:\386695_2017_NCDOT_BridgeDesign_LSA\Proj\B-5629\Traffic\TrafficControl\TCP\200.020_B-5629_TC_TMP-4.dgn
UserST086227

DocuSign Envelope ID: 8F480384-7B2B-48EF-A67D-80D5618ED3AA

PROJ. REFERENCE NO.	SHEET NO.
B-5629	TMP-5

PLANS PREPARED FOR THE NCDOT BY:
MOTT MACDONALD
MOTT MACDONALD I & E, LLC
1101 HAYNES STREET, SUITE 101
RALEIGH, NC 27604
NC LICENSE NO. F-0669

A

R11-4
60" x 30"

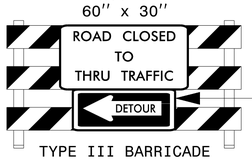

M4-10L
48" x 18"

TYPE III BARRICADE

B

R11-4
60" x 30"

M4-10R
48" x 18"

TYPE III BARRICADE

C

R11-2
48" x 30"

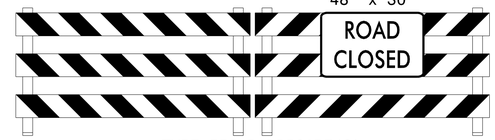

TYPE III BARRICADE(S)

1

W20-3
48" X 48"

2

W20-3
48" X 48"

3

W20-2
48" X 48"

4

W20-3
48" X 48"

5

W20-3
48" x 48"

NEXT LEFT

SP-4L
42" X 12"

6

W20-3
48" x 48"

NEXT RIGHT

SP-4R
42" X 12"

7

END
DETOUR

M4-8 A
24" X 18"

8

OLD MILL
CREEK RD

SP-1
42" X 30"

DETOUR

M4-8
24" X 12"

M6-1
21" X 15"

9

OLD MILL
CREEK RD

SP-1
42" X 30"

DETOUR

M4-8
24" X 12"

M6-1
21" X 15"

APPROVED: DocuSigned by: Lori D. Stouchho
FF586C7596C645A...

DATE: 10/11/2022

NORTH CAROLINA PROFESSIONAL SEAL 034437 ENGINEER LORI D. STOUCHHO

DOCUMENT NOT CONSIDERED FINAL
UNLESS ALL SIGNATURES COMPLETED

DIVISION OF HIGHWAYS
STATE OF NORTH CAROLINA
DEPARTMENT OF TRANSPORTATION
WORK ZONE TRAFFIC CONTROL

TEMPORARY TRAFFIC CONTROL
OLD MILL CREEK RD
BRIDGE REPLACEMENT DETOUR

9/22/2022
G:\366695_2017_NCDOT_BridgeDesign_LSA\Proj\B-5629\Traffic\TrafficControl\TCP\200.025_B-5629_TC_TMP-5.dgn
User:ST086227

TIP PROJECT: B-5629

STATE	STATE PROJECT REFERENCE NO.	SHEET NO.	TOTAL SHEETS
N.C.	B-5629	EC-1	

STATE PROJ. NO.	F.A. PROJ. NO.	DESCRIPTION

STATE OF NORTH CAROLINA
DIVISION OF HIGHWAYS

PLAN FOR PROPOSED
HIGHWAY EROSION CONTROL

BRUNSWICK COUNTY

LOCATION: BRIDGE NO. 40 OVER MILL CREEK ON SR 1515 (OLD MILL CREEK ROAD SE)

TYPE OF WORK: GRADING, PAVING, DRAINAGE AND STRUCTURE

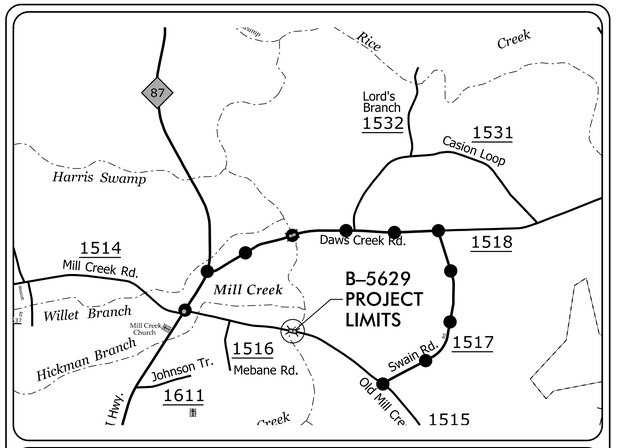

VICINITY MAP
NOT TO SCALE

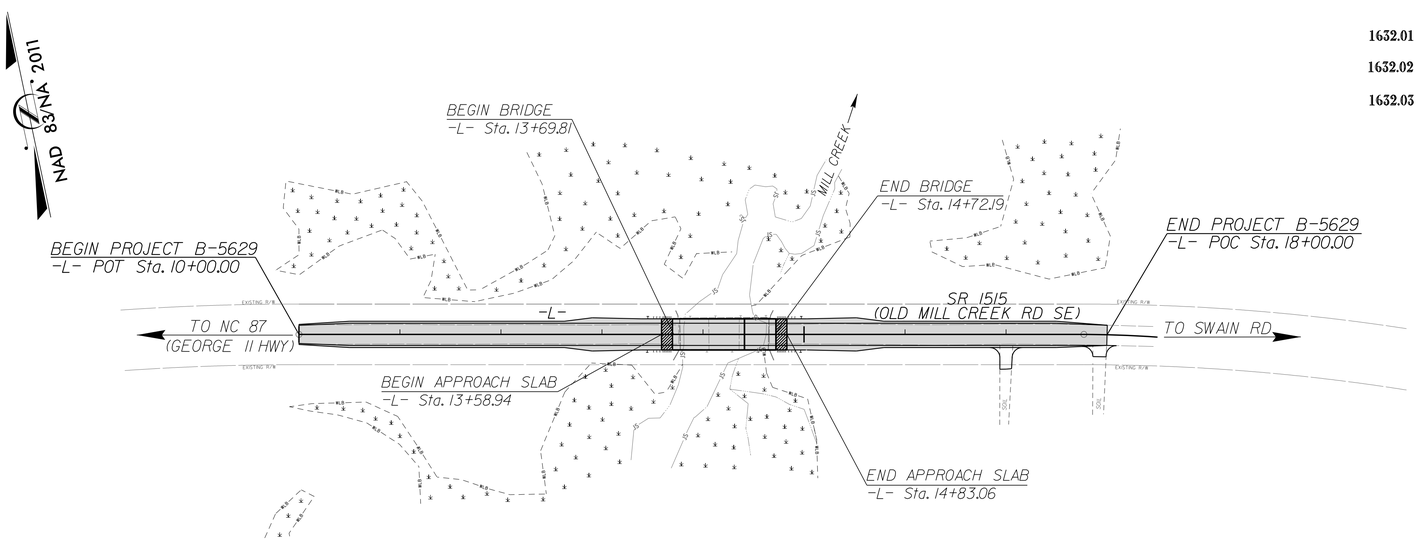

EROSION AND SEDIMENT CONTROL MEASURES

Std. #	Description	Symbol
1630.03	Temporary Silt Ditch	TSD
1630.05	Temporary Diversion	TD
1605.01	Temporary Silt Fence	
1606.01	Special Sediment Control Fence	
1622.01	Temporary Berms and Slope Drains	
1630.02	Silt Basin Type B	
1633.01	Temporary Rock Silt Check Type-A	
	Temporary Rock Silt Check Type-A with Matting and Polyacrylamide (PAM)	
1633.02	Temporary Rock Silt Check Type-B	
	Wattle/ Coir Fiber Wattle	EW CFW
	Wattle/ Coir Fiber Wattle with Polyacrylamide (PAM)	
1634.01	Temporary Rock Sediment Dam Type-A	
1634.02	Temporary Rock Sediment Dam Type-B	
1635.01	Rock Pipe Inlet Sediment Trap Type-A	
1635.02	Rock Pipe Inlet Sediment Trap Type-B	
1630.04	Stilling Basin	
1630.06	Special Stilling Basin	
	Rock Inlet Sediment Trap:	
1632.01	Type A	A
1632.02	Type B	B
1632.03	Type C	C
	Skimmer Basin	SK
	Tiered Skimmer Basin	SK
	Infiltration Basin	

THIS PROJECT CONTAINS EROSION CONTROL PLANS FOR CLEARING AND GRUBBING PHASE OF CONSTRUCTION.

GRAPHIC SCALE

50 25 0 50 100

PLANS

THESE EROSION AND SEDIMENT CONTROL PLANS COMPLY WITH THE APPLICABLE REGULATIONS SET FORTH BY THE NCG-010000 GENERAL CONSTRUCTION PERMIT EFFECTIVE APRIL 1, 2019 AND ISSUED BY THE NORTH CAROLINA DEPARTMENT OF ENVIRONMENTAL QUALITY DIVISION OF WATER RESOURCES.

MOTT MACDONALD

LEVEL III CERTIFIED BY:
W. HERBERT TURNER, JR., PE
CERTIFICATION NUMBER: 3150
ISSUED: JANUARY 17, 2023

Prepared in the Office of:

MOTT MACDONALD
7621 Purfoy Road, Suite 115
Fuquay-Varina, NC 27526
(919) 552-2253
(919) 552-2254 (Fax)
www.mottmac.com
NC License No. F-0669

Designed by:

W. Herbert Turner, Jr., PE — ***3150***
NAME — *LEVEL III CERTIFICATION NO.*

Roadway Standard Drawings

The following roadway english standards as appear in "Roadway Standard Drawings"– Roadway Design Unit – N. C. Department of Transportation – Raleigh, N. C., dated January 2018 and the latest revison thereto are applicable to this project and by reference hereby are considered a part of these plans.

1604.01	Railroad Erosion Control Detail	1632.01	Rock Inlet Sediment Trap Type A
1605.01	Temporary Silt Fence	1632.02	Rock Inlet Sediment Trap Type B
1606.01	Special Sediment Control Fence	1632.03	Rock Inlet Sediment Trap Type C
1607.01	Gravel Construction Entrance	1633.01	Temporary Rock Silt Check Type A
1622.01	Temporary Berms and Slope Drains	1633.02	Temporary Rock Silt Check Type B
1630.01	Riser Basin	1634.01	Temporary Rock Sediment Dam Type A
1630.02	Silt Basin Type B	1634.02	Temporary Rock Sediment Dam Type B
1630.03	Temporary Silt Ditch	1635.01	Rock Pipe Inlet Sediment Trap Type A
1630.04	Stilling Basin	1635.02	Rock Pipe Inlet Sediment Trap Type B
1630.05	Temporary Diversion	1640.01	Coir Fiber Baffle
1630.06	Special Stilling Basin	1645.01	Temporary Stream Crossing
1631.01	Matting Installation		

1/17/2023
R:\Erosion Control\B5629_ec_tsh.dgn
MOTT MACDONALD

PROJECT REFERENCE NO.	SHEET NO.
B-5629	EC-2
R/W SHEET NO.	
ROADSIDE ENVIRONMENTAL PROJECT ENGINEER	

COIR FIBER WATTLE WITH POLYACRYLAMIDE (PAM) DETAIL

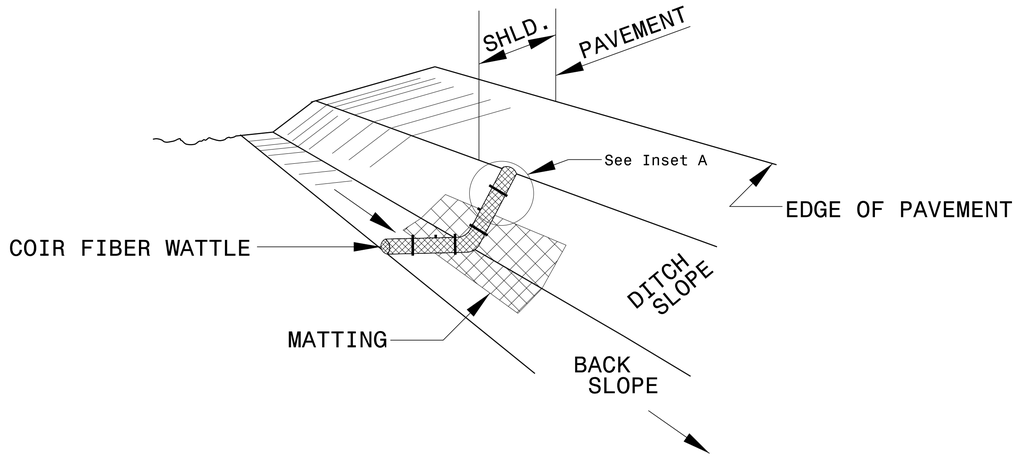

ISOMETRIC VIEW

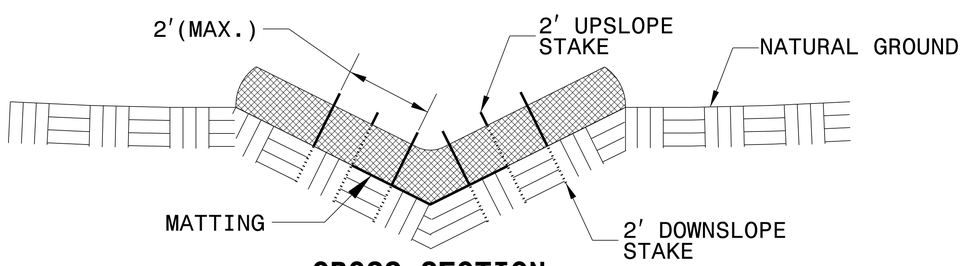

CROSS SECTION VEE DITCH

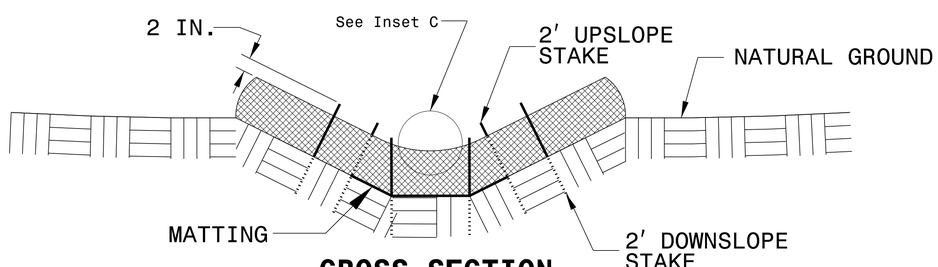

CROSS SECTION TRAPEZOIDAL DITCH

NOTES:

USE MINIMUM 12 IN. DIAMETER COIR FIBER (COCONUT FIBER) WATTLE.

USE 2 FT. WOODEN STAKES WITH A 2 IN. BY 2 IN. NOMINAL CROSS SECTION.

ONLY INSTALL WATTLE(S) TO A HEIGHT IN DITCH SO FLOW WILL NOT WASH AROUND WATTLE AND SCOUR DITCH SLOPES AND AS DIRECTED.

INSTALL A MINIMUM OF 2 UPSLOPE STAKES AND 4 DOWNSLOPE STAKES AT AN ANGLE TO WEDGE WATTLE TO BOTTOM OF DITCH.

PROVIDE STAPLES MADE OF 0.125 IN. DIAMETER STEEL WIRE FORMED INTO A U SHAPE NOT LESS THAN 12" IN LENGTH.

INSTALL STAPLES APPROXIMATELY EVERY 1 LINEAR FOOT ON BOTH SIDES OF WATTLE AND AT EACH END TO SECURE IT TO THE SOIL.

INSTALL MATTING IN ACCORDANCE WITH SECTION 1631 OF THE STANDARD SPECIFICATIONS.

PRIOR TO POLYACRYLAMIDE (PAM) APPLICATION, OBTAIN A SOIL SAMPLE FROM PROJECT LOCATION, AND FROM OFFSITE MATERIAL, AND ANALYZE FOR APPROPRIATE PAM FLOCCULANT TO BE APPLIED TO EACH WATTLE.

INITIALLY APPLY 2 OUNCES OF ANIONIC OR NEUTRALLY CHARGED PAM OVER WATTLE WHERE WATER WILL FLOW AND 1 OUNCE OF PAM ON MATTING ON EACH SIDE OF WATTLE. REAPPLY PAM AFTER EVERY RAINFALL EVENT THAT IS EQUAL TO OR EXCEEDS 0.50 IN.

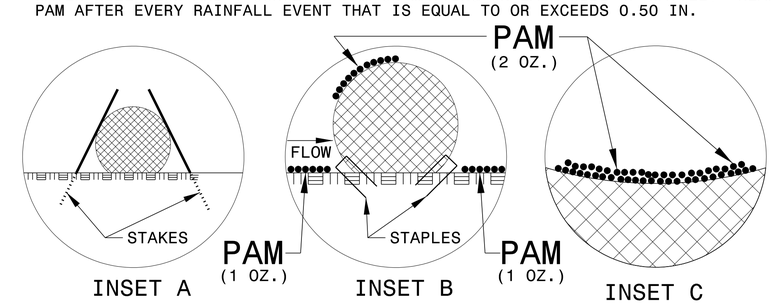

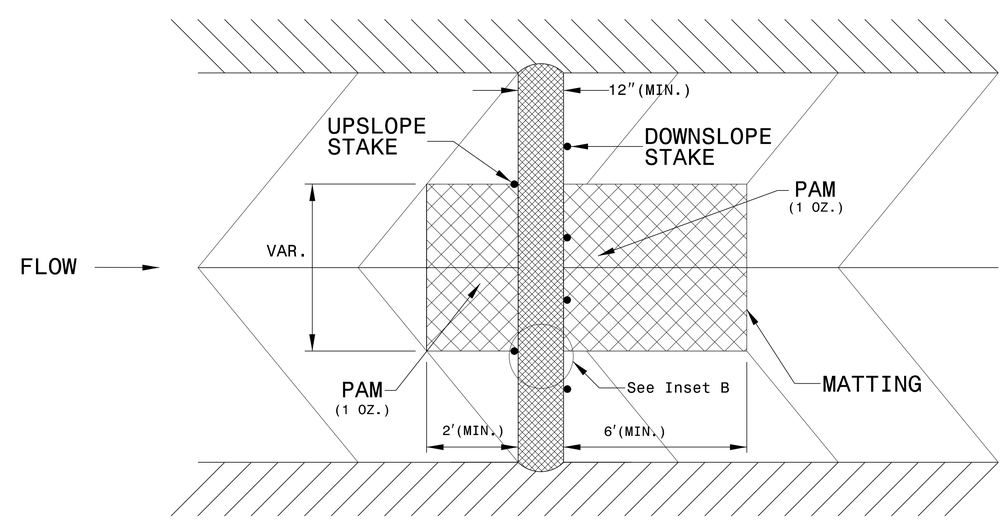

TOP VIEW

9/23/2022
R:\Erosion Control\B5629_ec_psh02.dgn
default

DIVISION OF HIGHWAYS
STATE OF NORTH CAROLINA

SOIL STABILIZATION TIMEFRAMES

SITE DESCRIPTION	STABILIZATION TIME	TIMEFRAME EXCEPTIONS
PERIMETER DIKES, SWALES, DITCHES AND SLOPES	7 DAYS	NONE
HIGH QUALITY WATER (HQW) ZONES	7 DAYS	NONE
SLOPES STEEPER THAN 3:1	7 DAYS	IF SLOPES ARE 10' OR LESS IN LENGTH AND ARE NOT STEEPER THAN 2:1, 14 DAYS ARE ALLOWED.
SLOPES 3:1 OR FLATTER	14 DAYS	7 DAYS FOR SLOPES GREATER THAN 50' IN LENGTH.
ALL OTHER AREAS WITH SLOPES FLATTER THAN 4:1	14 DAYS	NONE, EXCEPT FOR PERIMETERS AND HQW ZONES.

9/23/2022
R:\Erosion Control\B-5629_ec_psh03.dgn
default

PROJECT REFERENCE	SHEET NO.
B-5629	EC-4/CONST-4

ROADSIDE ENVIRONMENTAL PROJECT ENGINEER

LEVEL III CERTIFIED BY:
W. HERBERT TURNER, JR., PE
CERTIFICATION NUMBER: 3150
ISSUED: JANUARY 17, 2023

Prepared in the Office of:
MOTT MACDONALD
7621 Purfoy Road, Suite 115
Fuquay-Varina, NC 27526
www.mottmac.com

CLEARING AND GRUBBING
EROSION CONTROL FOR
CONSTRUCTION SHEET 4

DETAIL A
SPECIAL LATERAL 'V' DITCH
(Not to Scale)

-L- STA. 15+00 TO 17+50 RT

DETAIL B
SPECIAL LATERAL BASE DITCH
(Not to Scale)

-L- STA. 10+50 TO 12+75 RT
-L- STA. 14+50 TO 18+00 LT

DETAIL C
BANK STABILIZATION
(Not to Scale)

Type of Liner = CL II Rip-Rap w/Geotextile

-L- STA. 13+76 TO 14+06
-L- STA. 14+36 TO 14+67
*-L- STA. 14+36 TO 14+60 LT

NOTE:
PLACE TEMPORARY ROCK SEDIMENT DAMS TYPE - B AND TEMPORARY ROCK SILT CHECKS TYPE - A AT DRAINAGE OUTLETS.

NOTE:
ALL EROSION CONTROL DEVICES SHOWN ARE LOCATED WITHIN EXISTING R/W OR EASEMENT.

NOTE:
PERIMETER EC MEASURES SHALL BE INSTALLED DURING C & G PHASE.

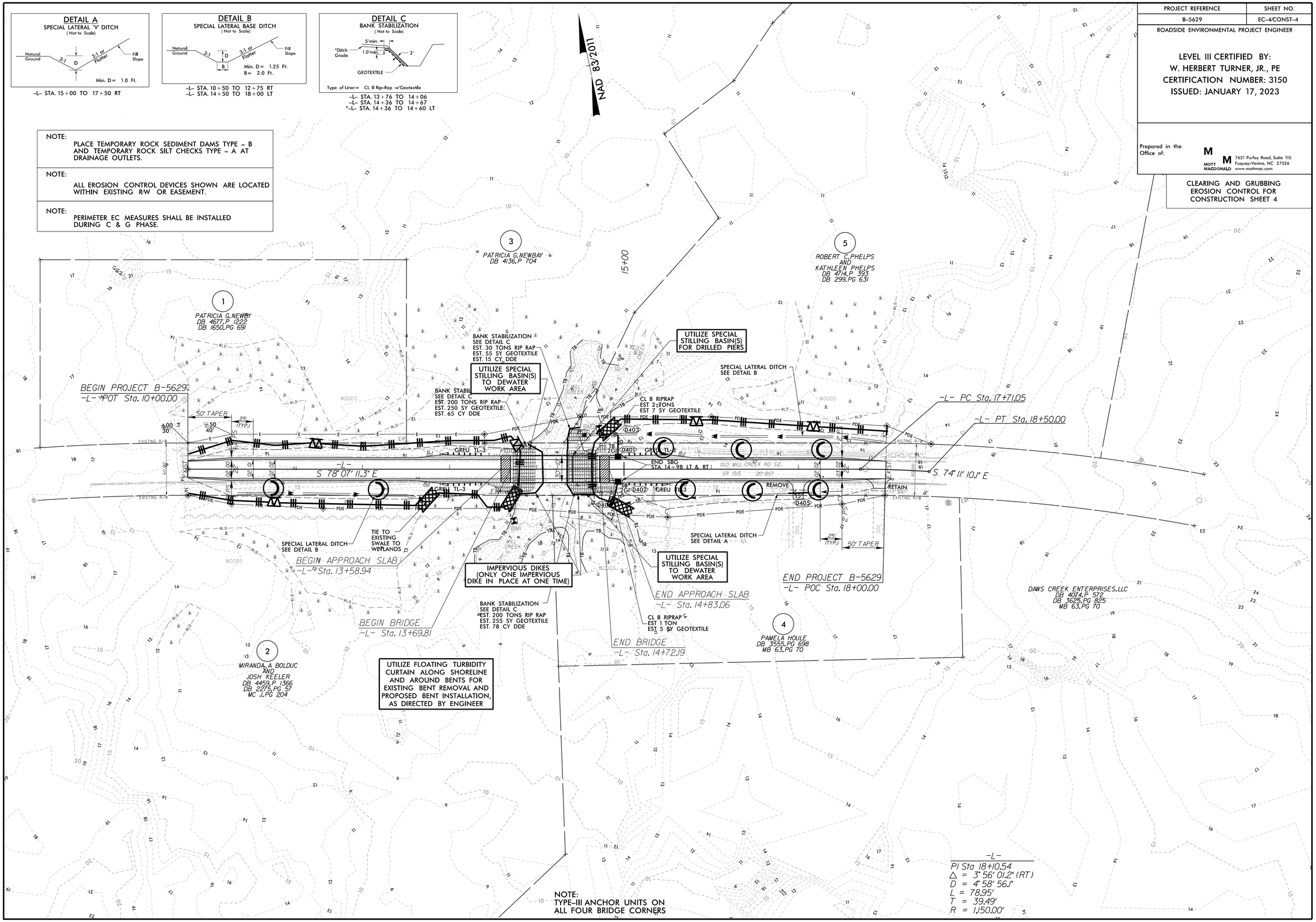

NOTE:
TYPE-III ANCHOR UNITS ON ALL FOUR BRIDGE CORNERS

1/17/2023
R:\Erosion Control\B5629_ec_cg_psh.dgn
TUR85847

PROJECT REFERENCE	SHEET NO.
B-5629	EC-5/CONST-4

ROADSIDE ENVIRONMENTAL PROJECT ENGINEER

LEVEL III CERTIFIED BY:
W. HERBERT TURNER, JR., PE
CERTIFICATION NUMBER: 3150
ISSUED: JANUARY 17, 2023

Prepared in the Office of:
MOTT MACDONALD
7621 Parfay Road, Suite 115
Fuquay-Varina, NC 27526
www.mottmac.com

FINAL EROSION CONTROL FOR CONSTRUCTION SHEET 4

DETAIL A
SPECIAL LATERAL 'V' DITCH
(Not to Scale)

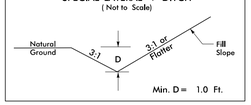

-L- STA. 15+00 TO 17+50 RT

DETAIL B
SPECIAL LATERAL BASE DITCH
(Not to Scale)

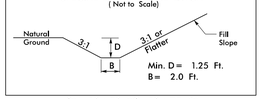

-L- STA. 10+50 TO 12+75 RT
-L- STA. 14+50 TO 18+00 LT

DETAIL C
BANK STABILIZATION
(Not to Scale)

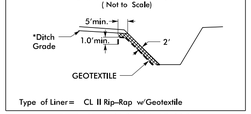

-L- STA. 13+76 TO 14+06
-L- STA. 14+36 TO 14+67
*-L- STA. 14+36 TO 14+60 LT

NAD 83/2011

NOTE: ALL EROSION CONTROL DEVICES SHOWN ARE LOCATED WITHIN EXISTING R/W OR EASEMENT.	NOTE: CONTRACTOR SHALL MAINTAIN ALL DEVICES AS PROJECT IS BROUGHT UP TO GRADE.
NOTE: CONTRACTOR SHALL PROVIDE INLET PROTECTION FOR PARTIALLY INSTALLED STORM DRAINS. THIS MEASURE SHOULD BE INSTALLED AT THE END OF EACH WORKING DAY.	NOTE: INSTALL MATTING FOR EROSION CONTROL IN ALL PROPOSED DITCH LINES EXCEPT WHERE PERMANENT LINERS ARE SPECIFIED ON THE PLANS OR DIRECTED OTHERWISE BY THE ENGINEER.
	NOTE: CONTRACTOR SHALL PROVIDE GROUND COVER ON EXPOSED SLOPES IN ACCORDANCE WITH THE "SOIL STABILIZATION TIMEFRAMES", SEE EC-3.

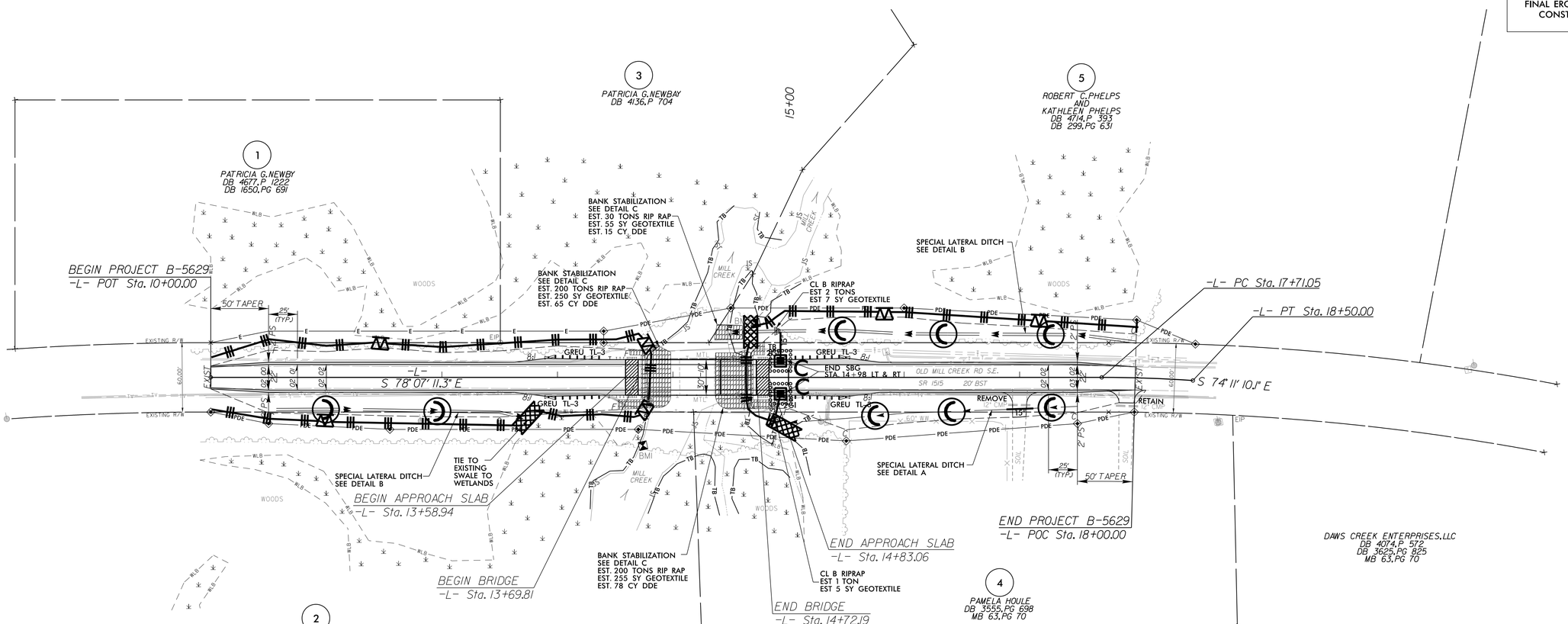

MATTING FOR EROSION CONTROL

CONST SHEET NO.	LINE	FROM STATION	TO STATION	SIDE	ESTIMATE (SY)
4	L	10+50	11+00	RT	40
4	L	11+00	12+75	RT	170
4	L	15+00	17+50	RT	155
4	L	14+50	18+00	LT	340
				TOTAL	705

NOTE:
TYPE-III ANCHOR UNITS ON ALL FOUR BRIDGE CORNERS

-L-
PI Sta 18+10.54
△ = 3° 56' 01.2" (RT)
D = 4° 58' 56.1"
L = 78.95'
T = 39.49'
R = 1,150.00'

1/17/2023
R:\Erosion Control\B5629_ec_final_psh.dgn
TJP85847

DocuSign Envelope ID: 12A97AE2-1449-460F-970C-2AC4633920BA

T.I.P.: B-5629

TIP NO.	SHEET NO.
B-5629	SIGN-1

APPROVED: DocuSigned by: Samuel Coleman 99375A81AF3C490...

DATE: 10/11/2022

SEAL

NORTH CAROLINA PROFESSIONAL SEAL 043765 ENGINEER SAMUEL D. COLEMAN

DOCUMENT NOT CONSIDERED FINAL UNLESS ALL SIGNATURES COMPLETED

PLANS PREPARED FOR THE NCDOT BY:

MOTT MACDONALD

MOTT MACDONALD I & E, LLC
1101 HAYNES STREET, SUITE 101
RALEIGH, NC 27604
NC LICENSE NO. F-0669

STATE OF NORTH CAROLINA
DEPARTMENT OF TRANSPORTATION

SIGNING AND PAVEMENT MARKING PLAN
BRUNSWICK COUNTY
LOCATION: BRIDGE #40 ON SR 1515 (OLD MILL CREEK RD. SE) OVER MILL CREEK

SUMMARY OF QUANTITIES

ITEM NO.		ITEM DESCRIPTION	QUANTITY	UNIT
DESC. NO.	SECT. NO.			
4072000000	903	SUPPORTS, 3 LB. STEEL U-CHANNEL	15	L.F.
4102000000	904	SIGN ERECTION, TYPE E	1	EA.
4155000000	907	DISPOSAL OF SIGN SYSTEM, U-CHANNEL	7	EA.

ROADWAY STANDARD DRAWING

THE FOLLOWING ROADWAY STANDARDS AS APPEAR IN "ROADWAY STANDARD DRAWINGS" - PROJECT SERVICES UNIT - N.C. DEPARTMENT OF TRANSPORTATION - RALEIGH, N.C., DATED JANUARY 2018 ARE APPLICABLE TO THIS PROJECT AND BY REFERENCE HEREBY ARE CONSIDERED A PART OF THESE PLANS:

STD. NO.	TITLE
904.10	ORIENTATION OF GROUND MOUNTED SIGNS
904.50	MOUNTING OF TYPE 'D', 'E' AND 'F' SIGNS ON 'U' CHANNEL POSTS
1205.01	PAVEMENT MARKINGS - LINE TYPES AND OFFSETS
1205.02	PAVEMENT MARKINGS - TWO-LANE AND MULTILANE ROADWAYS
1205.12	PAVEMENT MARKINGS - BRIDGES
1250.01	RAISED PAVEMENT MARKERS - INSTALLATION SPACING
1251.01	RAISED PAVEMENT MARKERS - PERMANENT AND TEMPORARY
1261.01	GUARDRAIL AND BARRIER DELINEATORS - INSTALLATION SPACING
1261.02	GUARDRAIL AND BARRIER DELINEATORS - TYPES AND MOUNTING
1262.01	GUARDRAIL END DELINEATION

GENERAL NOTES

THE FOLLOWING GENERAL NOTES APPLY AT ALL TIMES FOR THE DURATION OF THE CONSTRUCTION PROJECT, EXCEPT WHEN OTHERWISE NOTED IN THE PLAN, OR DIRECTED BY THE ENGINEER.

A) INSTALL PAVEMENT MARKINGS AND PAVEMENT MARKERS ON THE FINAL SURFACE AS FOLLOWS:

ROAD NAME	MARKINGS	MARKER
SR 1515 (OLD MILL CREEK RD)	THERMOPLASTIC	RAISED MARKERS

B) TIE PROPOSED PAVEMENT MARKING LINES TO EXISTING PAVEMENT MARKING LINES.

C) REMOVE/REPLACE ANY CONFLICTING/DAMAGED PAVEMENT MARKINGS AND MARKERS.

D) PASSING ZONES WILL BE DETERMINED IN THE FIELD AND MUST BE APPROVED BY THE ENGINEER.

E) REMOVE ALL RESIDUE AND SURFACE LAITANCE BY ACCEPTABLE METHODS ON THE BRIDGE DECK PRIOR TO PLACING COLD APPLIED PLASTIC PAVEMENT MARKINGS.

F) SIGNS FURNISHED BY STATE.

G) CONFIRM IN WRITING AT LEAST 4 MONTHS IN ADVANCE, THE ACTUAL DATE THE DEPARTMENT FURNISED SIGNS WILL BE REQUIRED.

H) IF REMOVAL OR RELOCATION OF SIGNS ON PRIVATE STREET (NON-STATE MAINTAINED) IS REQUIRED DUE TO CONSTRUCTION, THE CONTRACTOR SHALL INFORM THE ENGINEER. THE WORK WILL BE COMPLETED BY OTHERS.

I) WHEN NOT STATIONED OR DIMENSIONED ON PLANS, ALL 'E' AND 'F' SIGNS SHALL BE FIELD LOCATED BY THE ENGINEER.

J) ALL EXISTING SIGNS ON "U" CHANNEL POST WITHIN THE PROJECT LIMITS SHALL BE REMOVED AND DISPOSED OF UNLESS OHTERWISE NOTED ON PLANS.

K) THE BACKGROUND FOR TYPE E & F SIGNS SHALL BE TYPE C REFLECTIVE SHEETING.

L) SEE ROADWAY PLANS FOR GUARD/GUIDE RAIL DETAILS.

INDEX

SHEET NO.	DESCRIPTION
SIGN-1	SIGNING AND PAVEMENT MARKING PLAN TITLE SHEET
SIGN-2	TYPE 'E' SIGNS/PM SCHEDULE
SIGN-3-3A	SIGNING AND PM DETAIL SHEETS

PLAN REVIEWED BY: N.C.D.O.T. SIGNING AND DELINEATION UNIT

AYMAN ALQUDWAH, PE SIGNING & DELINEATION REGIONAL ENGINEER

ANDREW SCOTT SIGNING & DELINEATION PROJECT DESIGN ENGINEER

STATE OF NORTH CAROLINA DEPARTMENT OF TRANSPORTATION

10/11/2022
G:\38669.2.2017_NCDOT_BridgeDesign_LSA\Proj\B-5629\Traffic\Signing\CADD\Signing Layout Plans\B-5629_Sgn_SGN_01.dgn
Users:TD8227

DocuSign Envelope ID: 4E0D1485-F045-476C-AEBC-5D55521AB0B6

401 QUANTITY REQ'D 1

36" X 36"
W3-5

ONE "U" POST PER SIGN

TIP NO.	SHEET NO.
B-5629	SIGN-2

APPROVED: DocuSigned by: Samuel Coleman 99375A81AF3C490...

DATE: 1/23/2023

SEAL

NORTH CAROLINA PROFESSIONAL SEAL 043765 ENGINEER SAMUEL D. COLEMAN

DOCUMENT NOT CONSIDERED FINAL UNLESS ALL SIGNATURES COMPLETED

PLANS PREPARED FOR THE NCDOT BY:

MOTT MACDONALD
MOTT MACDONALD I & E, LLC
1101 HAYNES STREET, SUITE 101
RALEIGH, NC 27604
NC LICENSE NO. F-0669

PAVEMENT MARKING SCHEDULE

THERMOPLASTIC

Symbol	Description	Material	Quantity
T1	WHITE EDGELINE (4", 90 MIL)	Thermo	1600 LF
T13	YELLOW DOUBLE CENTER (4", 90 MIL)	Thermo	1600 LF

PAVEMENT MARKERS

Symbol	Description	Color	Quantity
MA	PERMANENT RAISED MARKER	Yellow & Yellow	10 EA

TYPE 'E' SIGNS / PM SCHEDULE

1/23/2023
\\JSFUQHVFPS01\Proj\386695_2017_NCDOT_BridgeDesign_LSA\Proj\B-5629\Traffic\Signing\CADD\Signing Layout Plans\B-5629_Sgn_SGN_02.dgn
User:C0L85144

DocuSign Envelope ID: 12A97AE2-1449-460F-970C-2AC4633920BA

PROJ. REFERENCE NO.	SHEET NO.
B-5629	SIGN-3

PLANS PREPARED FOR THE NCDOT BY:
MOTT MACDONALD
MOTT MACDONALD I & E, LLC
1101 HAYNES STREET, SUITE 101
RALEIGH, NC 27604
NC LICENSE NO. F-0669

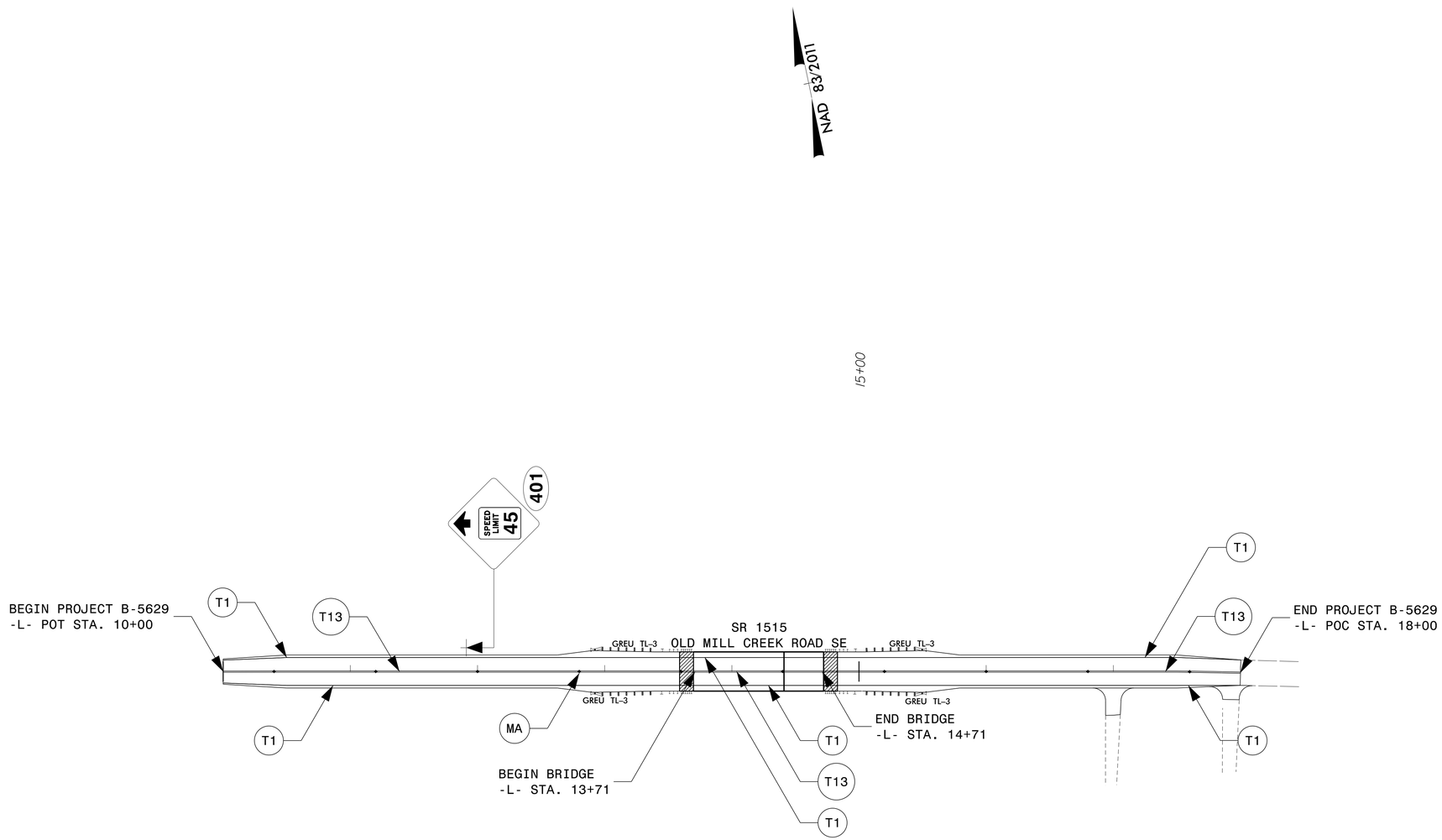

APPROVED: DocuSigned by: Samuel Coleman 99375A81AF3C490...

DATE: 10/11/2022

NORTH CAROLINA PROFESSIONAL SEAL 043765 ENGINEER SAMUEL D. COLEMAN

DOCUMENT NOT CONSIDERED FINAL UNLESS ALL SIGNATURES COMPLETED

DIVISION OF HIGHWAYS · STATE OF NORTH CAROLINA · DEPARTMENT OF TRANSPORTATION · WORK ZONE TRAFFIC CONTROL

PROPOSED SIGN / PM DETAIL SHEET

10/11/2022
G:\386695_2017_NCDOT_BridgeDesign_LSA\Proj\B-5629\Traffic\Signing\CADD\Signing Layout Plans\B-5629_Sgn_SGN_03.dgn
User:ST086227

DocuSign Envelope ID: 12A97AE2-1449-460F-970C-2AC4633920BA

PROJ. REFERENCE NO.	SHEET NO.
B-5629	SIGN-3A

PLANS PREPARED FOR THE NCDOT BY:
MOTT MACDONALD
MOTT MACDONALD I & E, LLC
1101 HAYNES STREET, SUITE 101
RALEIGH, NC 27604
NC LICENSE NO. F-0669

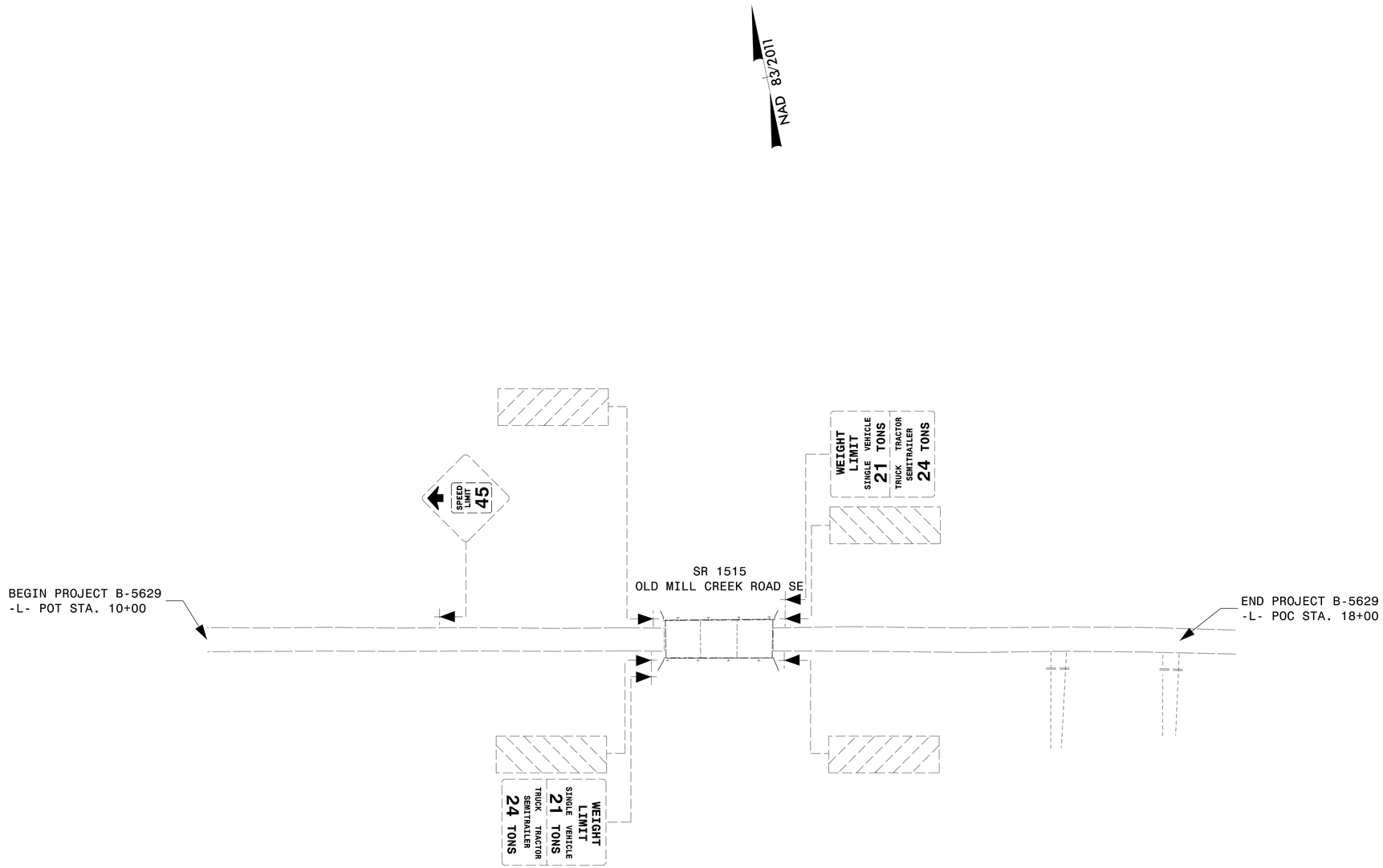

REMOVE AND DISPOSE OF ALL SIGNS

APPROVED: DocuSigned by: Samuel Coleman 99375A81AF3C490...

DATE: 10/11/2022

NORTH CAROLINA PROFESSIONAL SEAL 043765 ENGINEER SAMUEL D. COLEMAN

DOCUMENT NOT CONSIDERED FINAL UNLESS ALL SIGNATURES COMPLETED

DIVISION OF HIGHWAYS STATE OF NORTH CAROLINA DEPARTMENT OF TRANSPORTATION WORK ZONE TRAFFIC CONTROL

EXISTING SIGN / PM DETAIL SHEET

10/11/2022
G:\386635_2017_NCDOT_BridgeDesign_LSA\Proj\B-5629\Traffic\Signing\CADD\Signing Layout Plans\B-5629_Sgn_SGN_03A.dgn
User:ST086227

09/08/99

TIP PROJECT: B-5629

CONTRACT:

STATE OF NORTH CAROLINA
DIVISION OF HIGHWAYS

T.I.P. NO.		SHEET NO.
B-5629		UO-01
STATE PROJECT NO.	F. A. PROJ. NO.	DESCRIPTION
45584.1.1	BRZ-1515(011)	PE
45584.2.1	BRZ-1515(011)	R/W, UTL
45584.3.1	BRZ-1515(011)	CONST

UTILITIES BY OTHERS PLANS
BRUNSWICK COUNTY

NOTE:
ALL UTILITY WORK SHOWN ON THIS SHEET WILL BE DONE BY OTHERS. NO PAYMENT WILL BE MADE TO THE CONTRACTOR FOR UTILITY WORK SHOWN ON THIS SHEET.

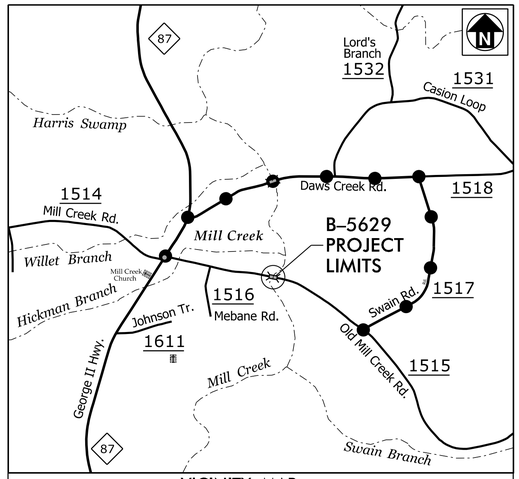

VICINITY MAP
(NOT TO SCALE)
OFF-SITE DETOUR

LOCATION: BRIDGE NO. 40 OVER MILL CREEK ON SR 1515 (OLD MILL CREEK RD SE)

TYPE OF WORK: UTILITIES BY OTHERS

UO-02

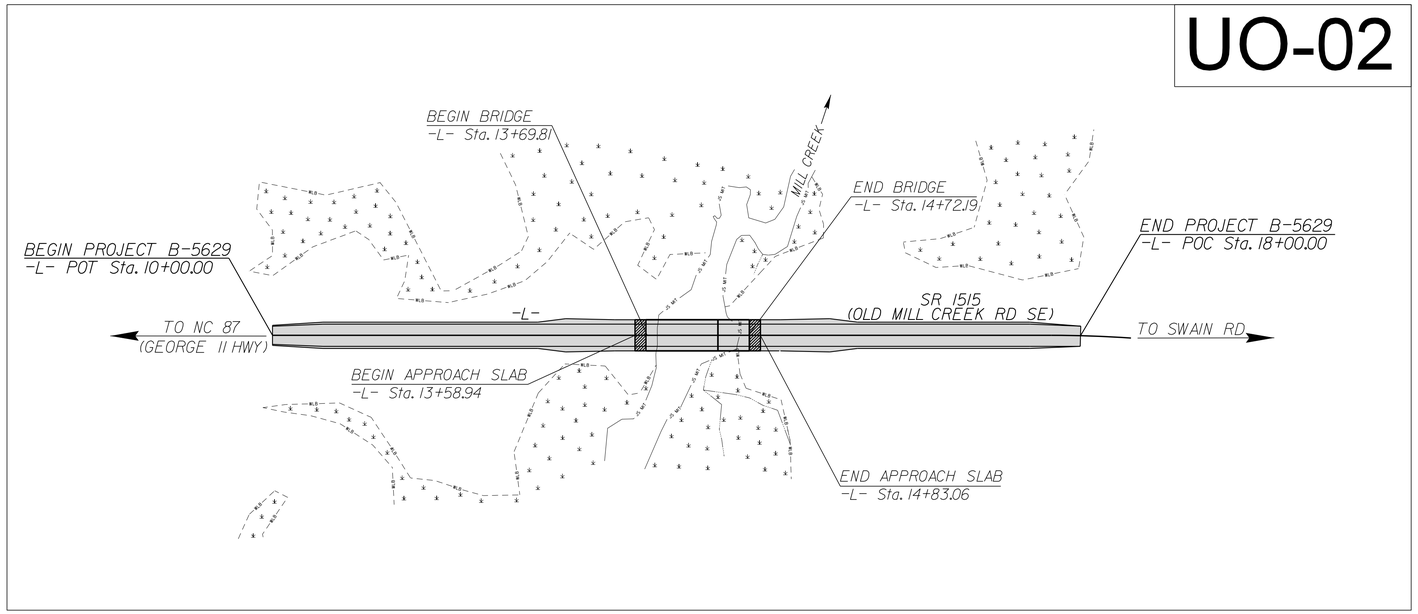

THIS PROJECT IS NOT WITHIN ANY MUNICIPAL BOUNDARIES.

GRAPHIC SCALES

50 25 0 50 100
PLANS

50 25 0 50 100
PROFILE (HORIZONTAL)

10 5 0 10 20
PROFILE (VERTICAL)

INDEX OF SHEETS

SHEET NO.:	DESCRIPTION:
UO-01	TITLE SHEET
UO-02	UBO PLAN SHEET

UTILITY OWNERS WITH CONFLICTS

(A) POWER DISTRIBUTION - BRUNSWICK ELECTRIC
(B) COMMUNICATION - FOCUS BROADBAND (ATLANTIC TELEPHONE) [ATMC]

PREPARED IN THE OFFICE OF:
MOTT MACDONALD
7621 Purfoy Rd Suite 115
Fuquay-Varina, NC 27526
(919) 552-2253
(919) 552-2254 (Fax)
www.mottmac.com
LICENSE NO. F-0669

FELTON PERRY PROJECT UTILITY COORDINATOR

DIVISION OF HIGHWAYS
UTILITIES UNIT - DIV. 3
5501 BARBADOS BLVD.
CASTLE HAYNE, NC 28429
PHONE (919) 341-2000
FAX (910) 675-0143

LONNY SLEEPER DIVISION UTILITIY ENGINEER

JON GILES DIVISION UTILITIY COORDINATOR

11:26:12 AM
R:\Utilities\Engineering\UBO\Proj\B5629_ut_tsh_UB001.dgn
JOR66165

PROJECT REFERENCE	SHEET NO.
B-5629	UO-02
THIS SHEET CORRESPONDS TO RDY-4	

Prepared in the Office of: MOTT MACDONALD, 7621 Purfoy Road, Suite 115, Fuquay-Varina, NC 27526, www.mottmac.com

UTILITIES BY OTHERS

NOTE:
ALL UTILITY WORK SHOWN ON THIS SHEET WILL BE DONE BY OTHERS. NO PAYMENT WILL BE MADE TO THE CONTRACTOR FOR UTILITY WORK SHOWN ON THIS SHEET.

VERTICAL SCALE 5' 0 5' 10'
HORIZONTAL SCALE 25' 0 25' 50'

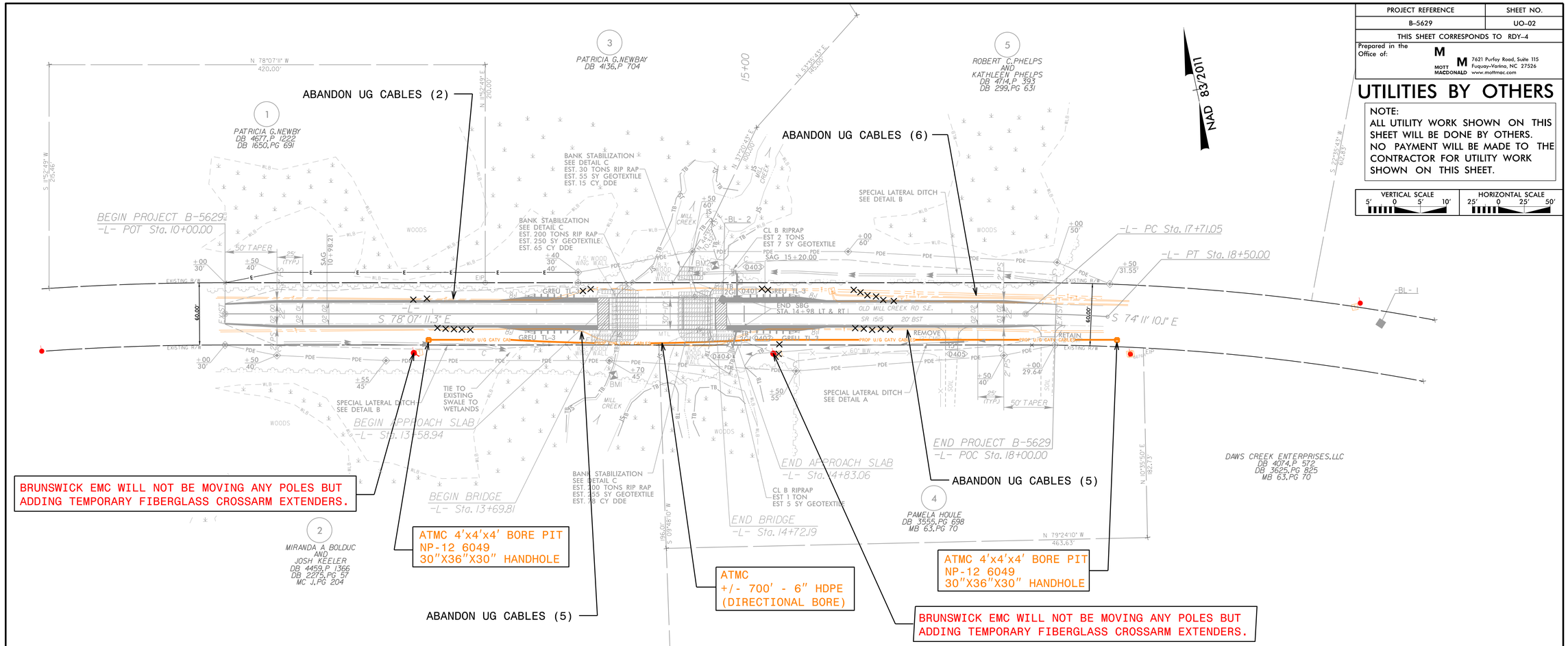

ATMC BORE

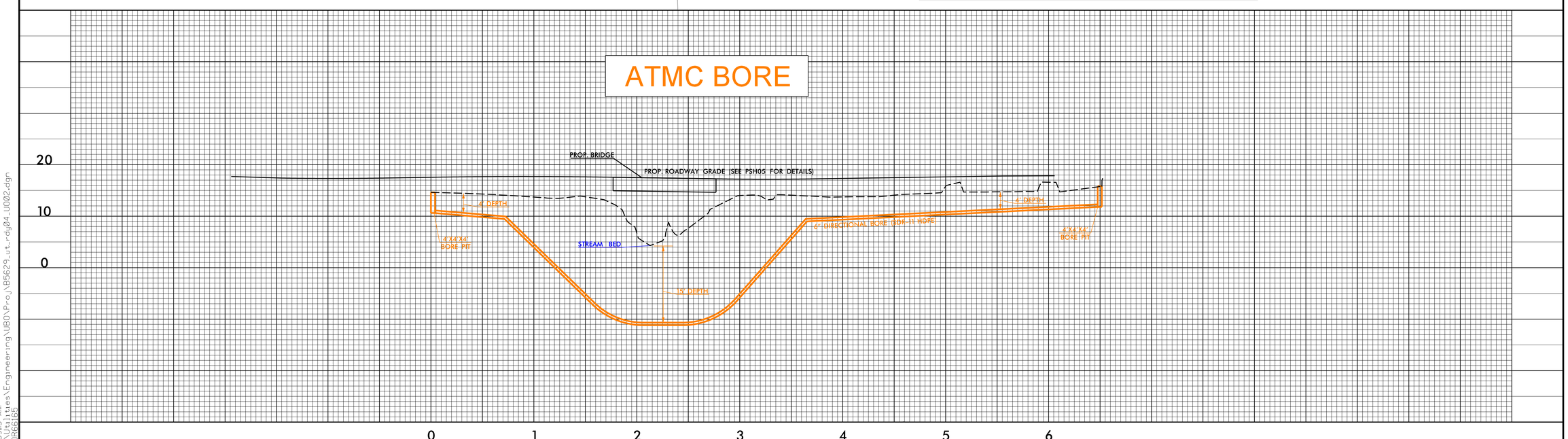

8/12/2022
7:59:15 AM
R:\Utilities\Engineering\UBO\Proj\B5629_ut_rdy04_UO02.dgn
JOR66165

0 5 10	PROJECT REFERENCE	SHEET NO.
	B-5629	X-1

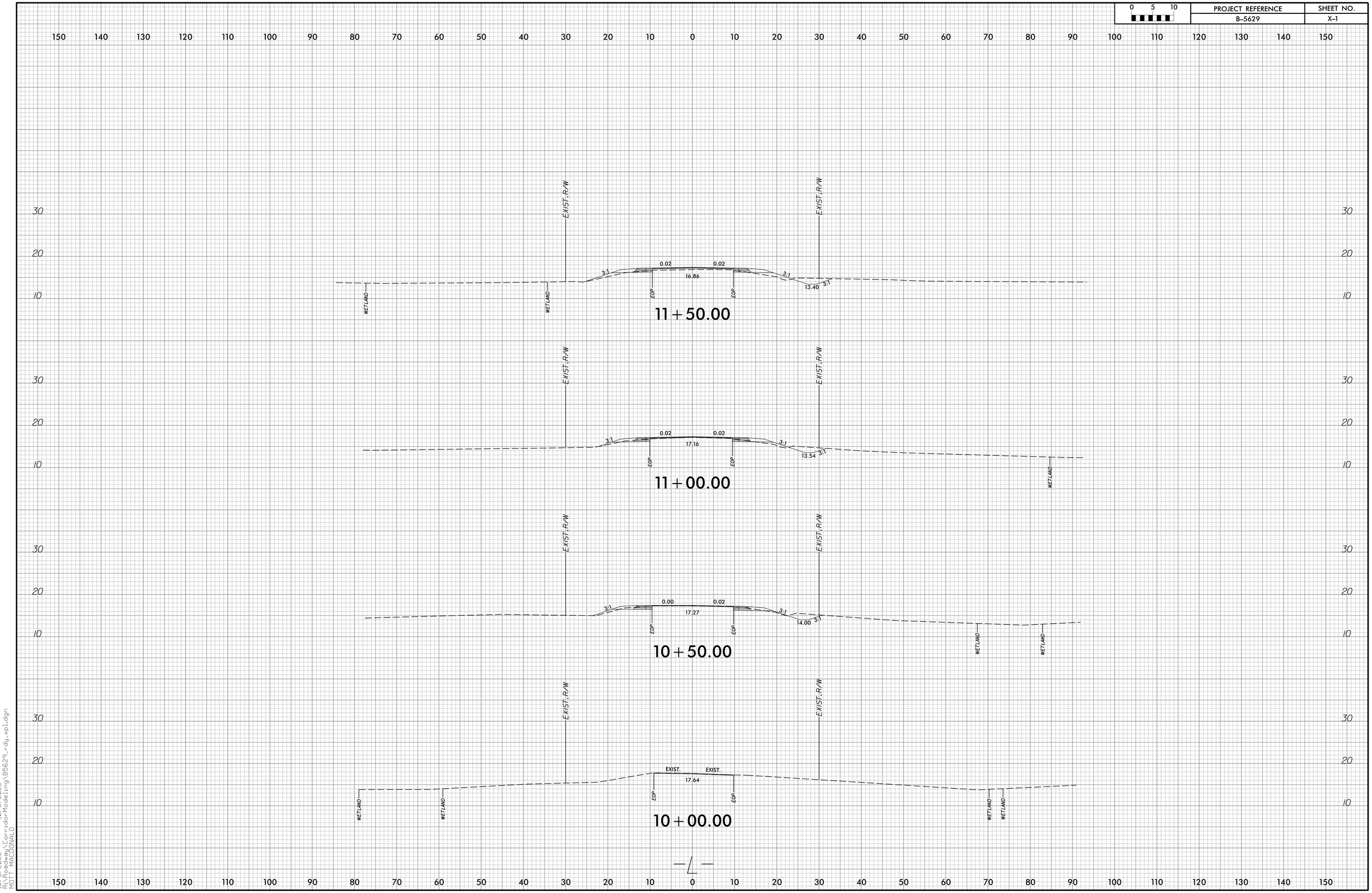

10/6/2022
R:\Roadway\CorridorModeling\B5629_rdy_xpl.dgn
10/6/2022
MOTT MACDONALD

PROJECT REFERENCE	SHEET NO.
B-5629	X-2

BEGIN BRIDGE 13+69.81

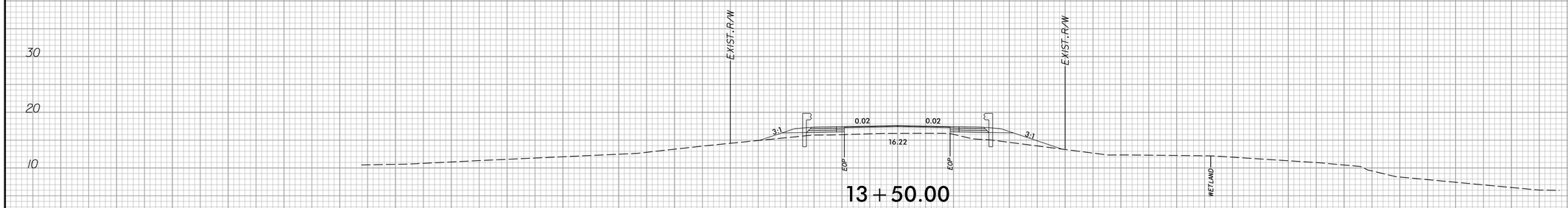

13+50.00

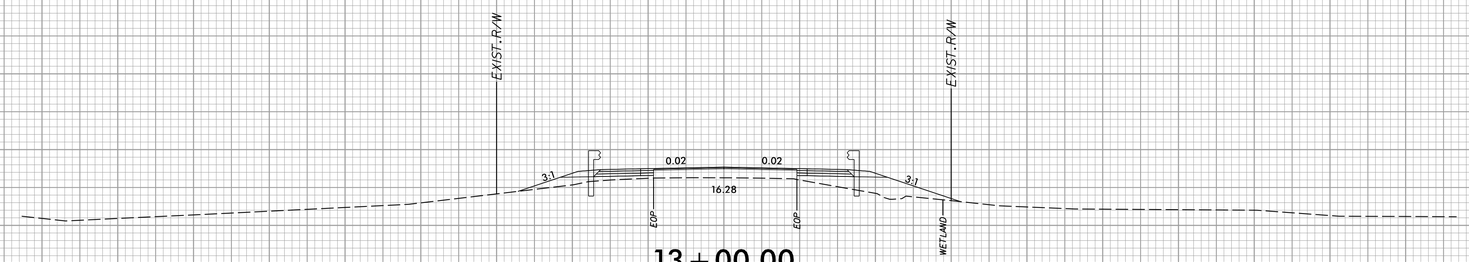

13+00.00

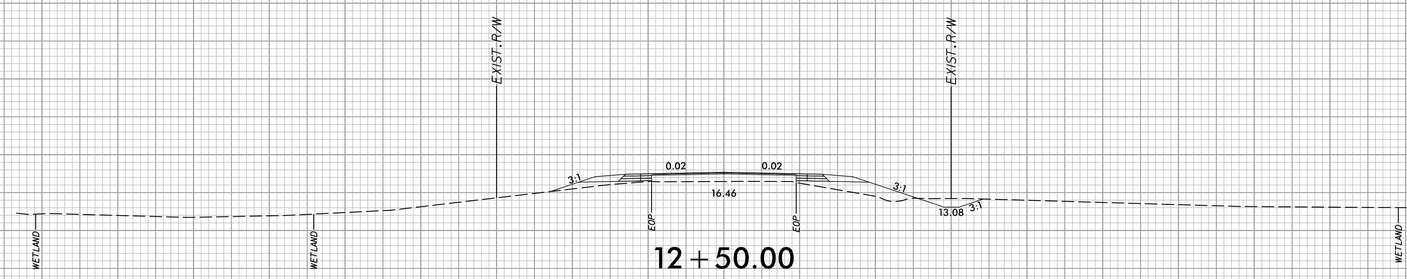

12+50.00

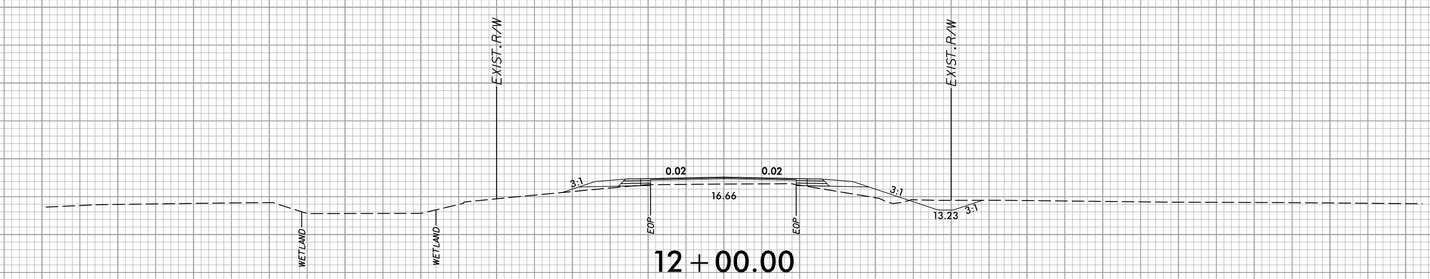

12+00.00

—L—

10/6/2022
R:\Roadway\CorridorModeling\B5629_rdy_xpl.dgn
10/6/2022
MDTT MACDONALD

PROJECT REFERENCE	SHEET NO.
B-5629	X-3

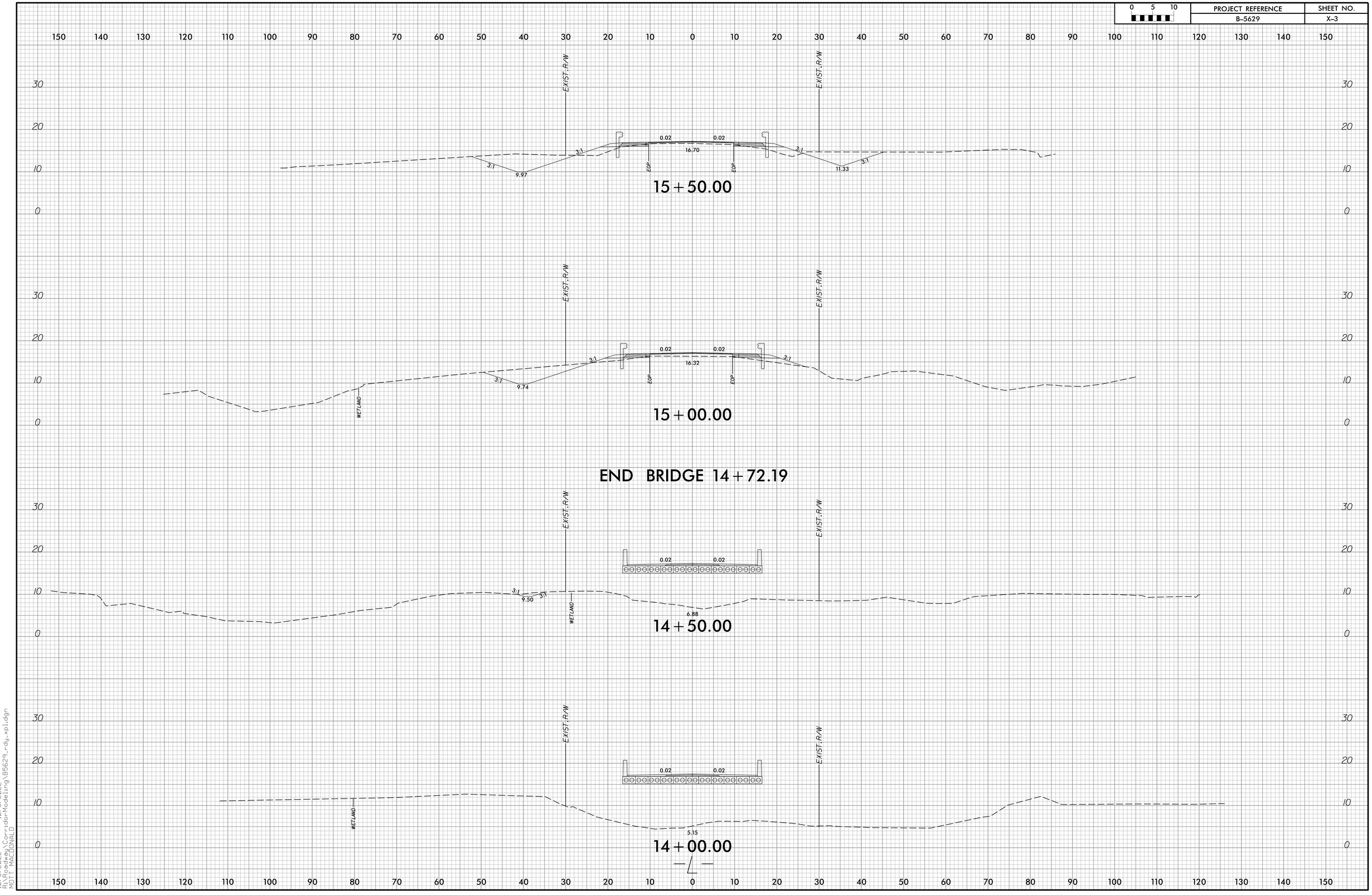

10/6/2022
R:\Roadway\Corridor Modeling\B5629_rdy_xpl.dgn
10/6/2022
MOTT MACDONALD

0 5 10	PROJECT REFERENCE	SHEET NO.
	B-5629	X-4

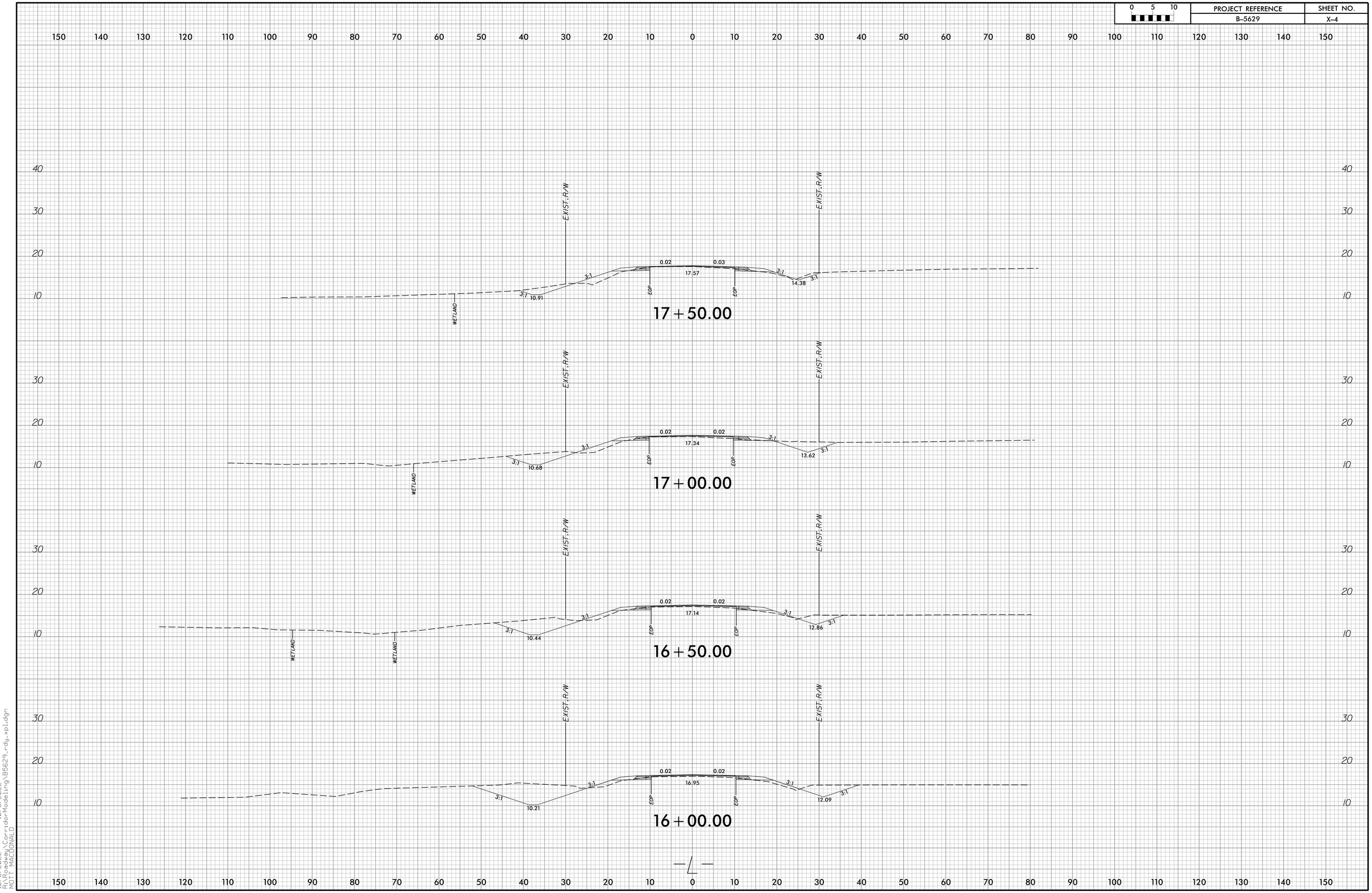

10/6/2022
R:\Roadway\CorridorModeling\B5629_rdy_xpl.dgn
10/6/2022
MDTT MACDONALD

PROJECT REFERENCE	SHEET NO.
B-5629	X-5

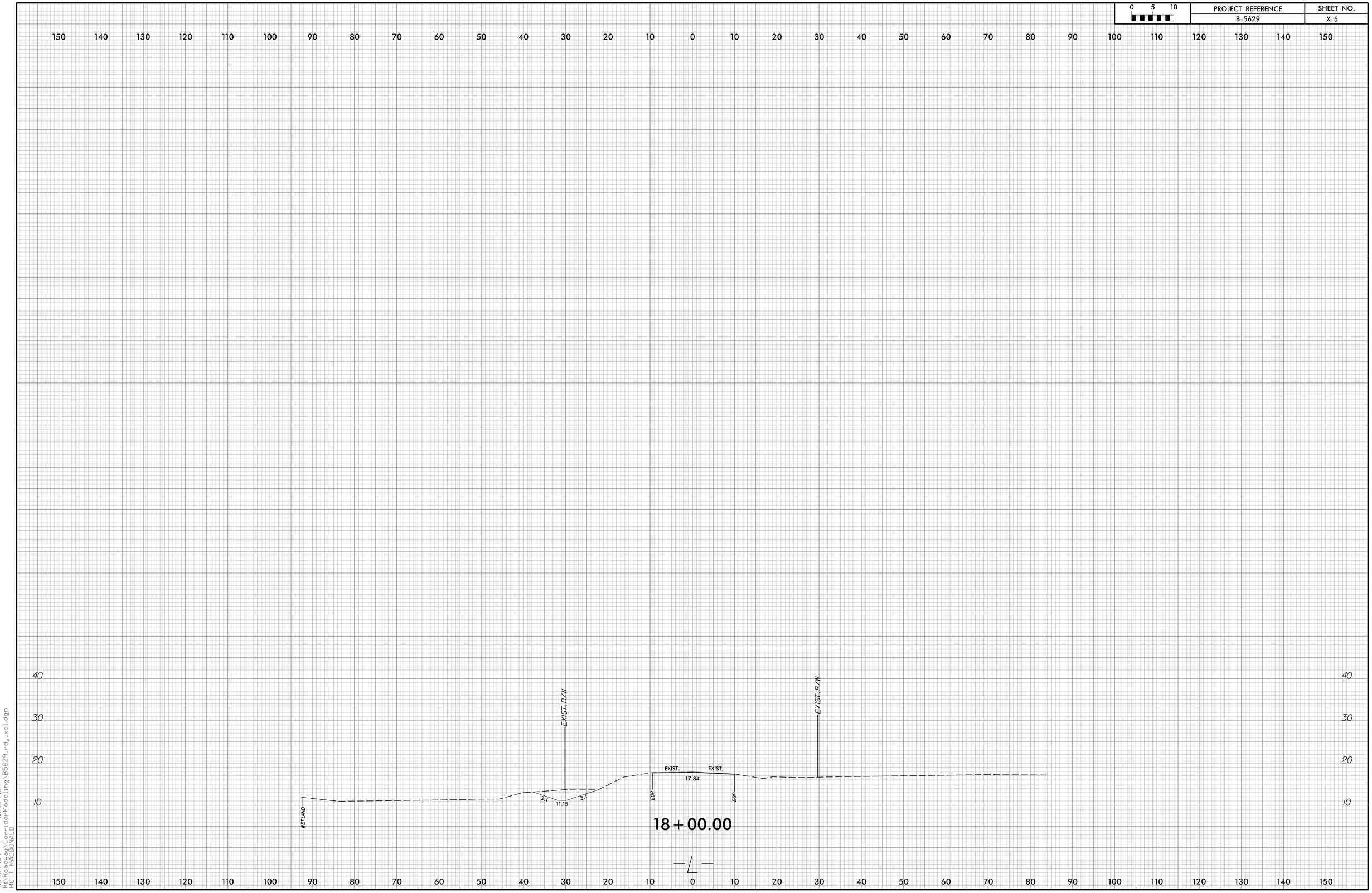

10/6/2022
R:\Roadway\Corridor Modeling\B5629_rdy_xpl.dgn
10/6/2022
MOTT MACDONALD

DocuSign Envelope ID: DCFB9160-5326-4E88-9FF6-E8827254661F

TIP PROJECT: B-5629

CONTRACT: DC00423

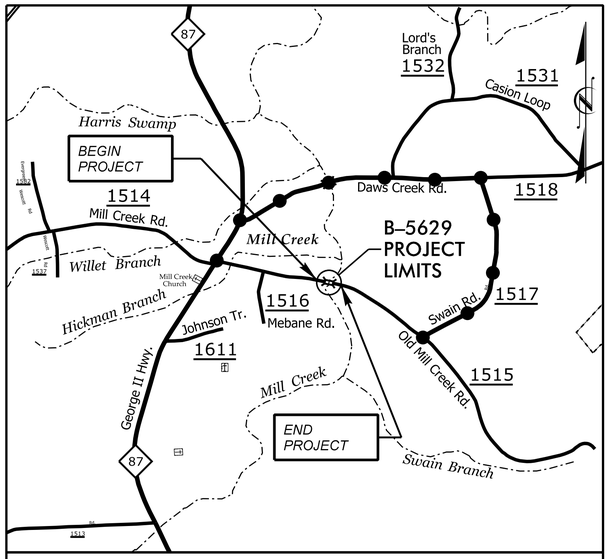

VICINITY MAP N.T.S.

STATE OF NORTH CAROLINA
DIVISION OF HIGHWAYS

BRUNSWICK COUNTY

STATE	STATE PROJECT REFERENCE NO.	SHEET NO.	TOTAL SHEETS
N.C.	B-5629	S-0	

STATE PROJ. NO.	F.A. PROJ. NO.	DESCRIPTION
45584.1.1	BRZ-1515(011)	P.E.
45584.2.1	BRZ-1515(011)	R/W, UTL
45584.3.1	BRZ-1515(011)	CONST

LOCATION: BRIDGE NO. 40 OVER MILL CREEK ON SR 1515 (OLD MILL CREEK ROAD SE)

TYPE OF WORK: GRADING, PAVING, DRAINAGE AND STRUCTURE

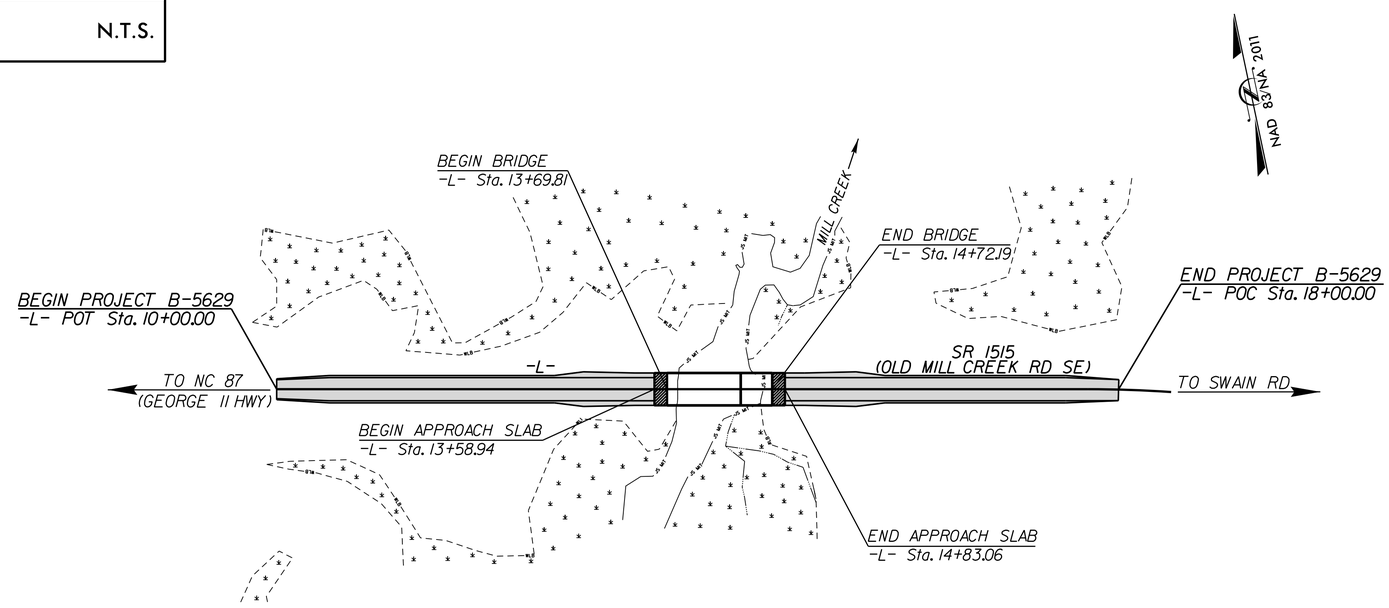

STRUCTURES

NORTH CAROLINA PROFESSIONAL SEAL 29112 ENGINEER RICHARD L. COFFMAN

DocuSigned by: Richard Coffman 7D4CF9F039E7414... 2/14/2023

DOCUMENT NOT CONSIDERED FINAL UNLESS ALL SIGNATURES COMPLETED

GRAPHIC SCALES

DESIGN DATA

ADT 2019 = 720
ADT 2045 = 900
K = TBD
D = TBD
T = 3% *
V = 60 MPH
* (TTST 1%, DUAL 2%)

FUNC CLASS = LOCAL

SUB REGIONAL TIER

PROJECT LENGTH

LENGTH ROADWAY TIP PROJECT B-5629 = 0.133 MILES
LENGTH STRUCTURE TIP PROJECT B-5629 = 0.019 MILES

TOTAL LENGTH TIP PROJECT B-5629 = 0.152 MILES

NCDOT CONTACT: DAVID STUTTS, P.E.
SMU PEF/PROGRAM MGT.

Prepared for NCDOT by:

LJB INC.

1401 AVESBORO RD, SUITE 215, GARNER, NC 27529
NC LICENSE NO. C-4123

2018 STANDARD SPECIFICATIONS

LETTING DATE :

MARCH 16, 2023

RICHARD COFFMAN, P.E.
PROJECT ENGINEER

RICHARD COFFMAN, P.E.
PROJECT DESIGN ENGINEER

STATE OF NORTH CAROLINA DEPARTMENT OF TRANSPORTATION

DocuSign Envelope ID: 16D1E2ED-3E13-4DD9-A1F6-2AE2BB99551D

F.A. PROJ. NO. BRZ-1515(011)

GRADE DATA

PI = 12+80.00
EL = 17.83'
VC = 170'
(+)0.3222% (−)0.3000%

GRADE DATA

PI = 15+20.00
EL = 17.11'
VC = 90'
(−)0.3000% (+)0.3000%

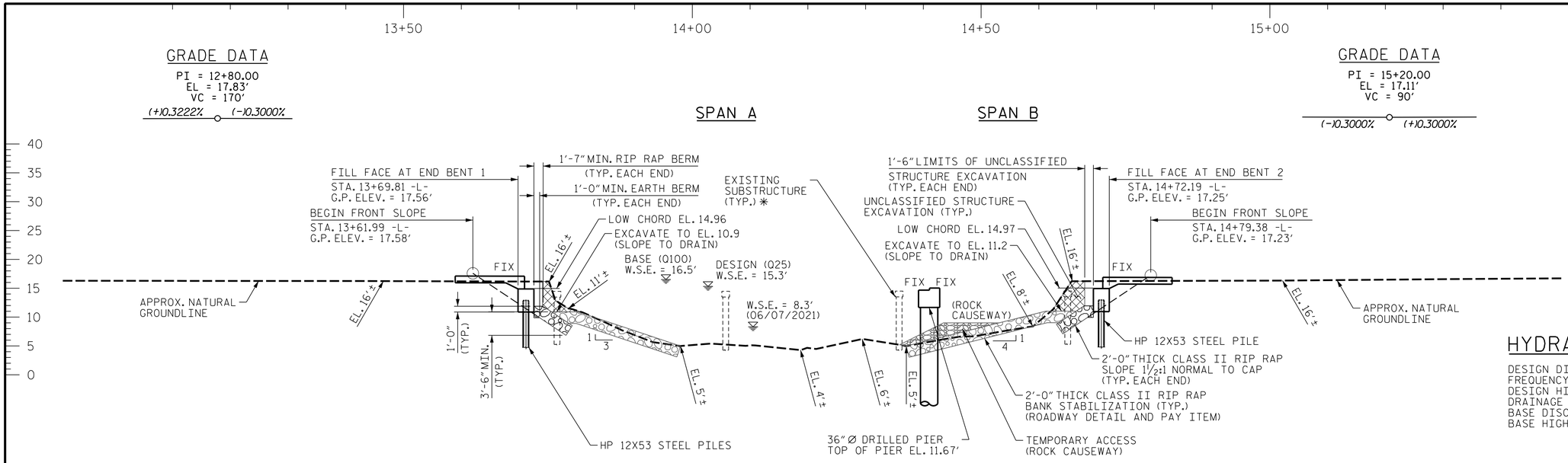

SECTION ALONG -L-

* EXISTING END BENTS AND INTERIOR BENT CONSISTS OF PRECAST CONCRETE CAPS ON TIMBER PILES AND STEEL REPLACEMENT PILES.

HYDRAULIC DATA

DESIGN DISCHARGE	= 2100 CFS
FREQUENCY OF DESIGN DISCHARGE	= 25 YR
DESIGN HIGH WATER ELEVATION	= 15.3 FT
DRAINAGE AREA	= 10.9 SQ MI
BASE DISCHARGE (Q100)	= 3100 CFS
BASE HIGH WATER ELEVATION	= 16.5 FT

OVERTOPPING DATA

OVERTOPPING DISCHARGE	= 3700 CFS
FREQUENCY OF OVERTOPPING	= 100+ YR
OVERTOPPING ELEVATION	= 17.2 FT

NOTE: OT OCCURS AT SAG STA. 15+20.00 -L-

HORIZONTAL CURVE DATA

PI Sta 18+10.54
Δ = 3° 56' 01.2" (RT)
D = 4° 58' 56.1"
L = 78.95'
T = 39.49'
R = 1,150.00'

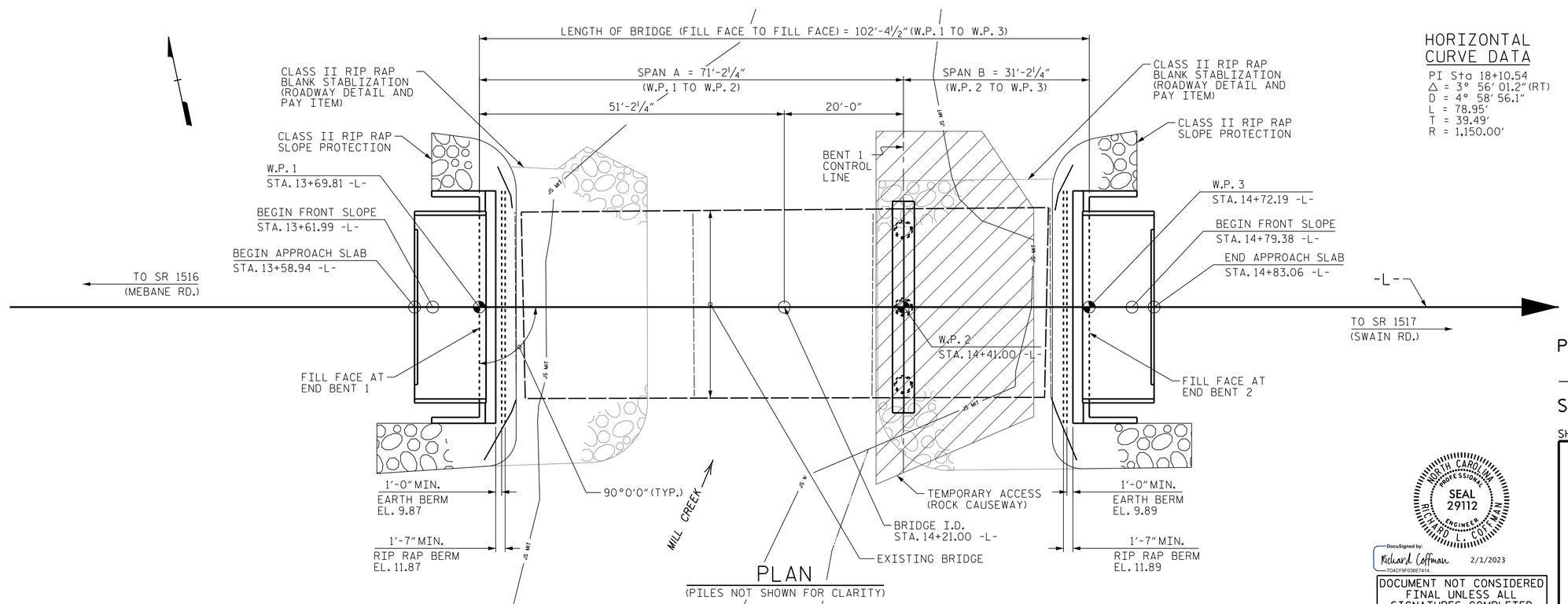

PLAN

(PILES NOT SHOWN FOR CLARITY)

PROJECT NO. B-5629
BRUNSWICK COUNTY
STATION: 14+21.00 -L-

SHEET 1 OF 4 REPLACES STRUCTURE 090040

STATE OF NORTH CAROLINA
DEPARTMENT OF TRANSPORTATION
RALEIGH

GENERAL DRAWING FOR BRIDGE OVER MILL CREEK ON SR 1515 BETWEEN SR 1516 AND SR 1517

NORTH CAROLINA PROFESSIONAL SEAL 29112 ENGINEER RICHARD L. COFFMAN

DocuSigned by: Richard Coffman 2/1/2023
7D4CF9F0D8E7414...

DOCUMENT NOT CONSIDERED FINAL UNLESS ALL SIGNATURES COMPLETED

LJB INC. (NC LICENSE C-4123)
1401 AVERSBORO ROAD
GARNER, NC 27529
(919) 594-6710 · LJB.COM
We think bigger.

REVISIONS						
NO.	BY:	DATE:	NO.	BY:	DATE:	
1			3			
2			4			

SHEET NO. SI-1
TOTAL SHEETS 23

DRAWN BY : JWG	DATE : 4/25/2022		
CHECKED BY : RLC	DATE : 5/2/2022		
ENGINEER OF RECORD : R. COFFMAN	DATE : 2/2022		

401.003.B5629_SMU_GD1_001.dgn
1/24/2023 9:11:25 AM

DocuSign Envelope ID: 16D1E2ED-3E13-4DD9-A1F6-2AE2BB99551D

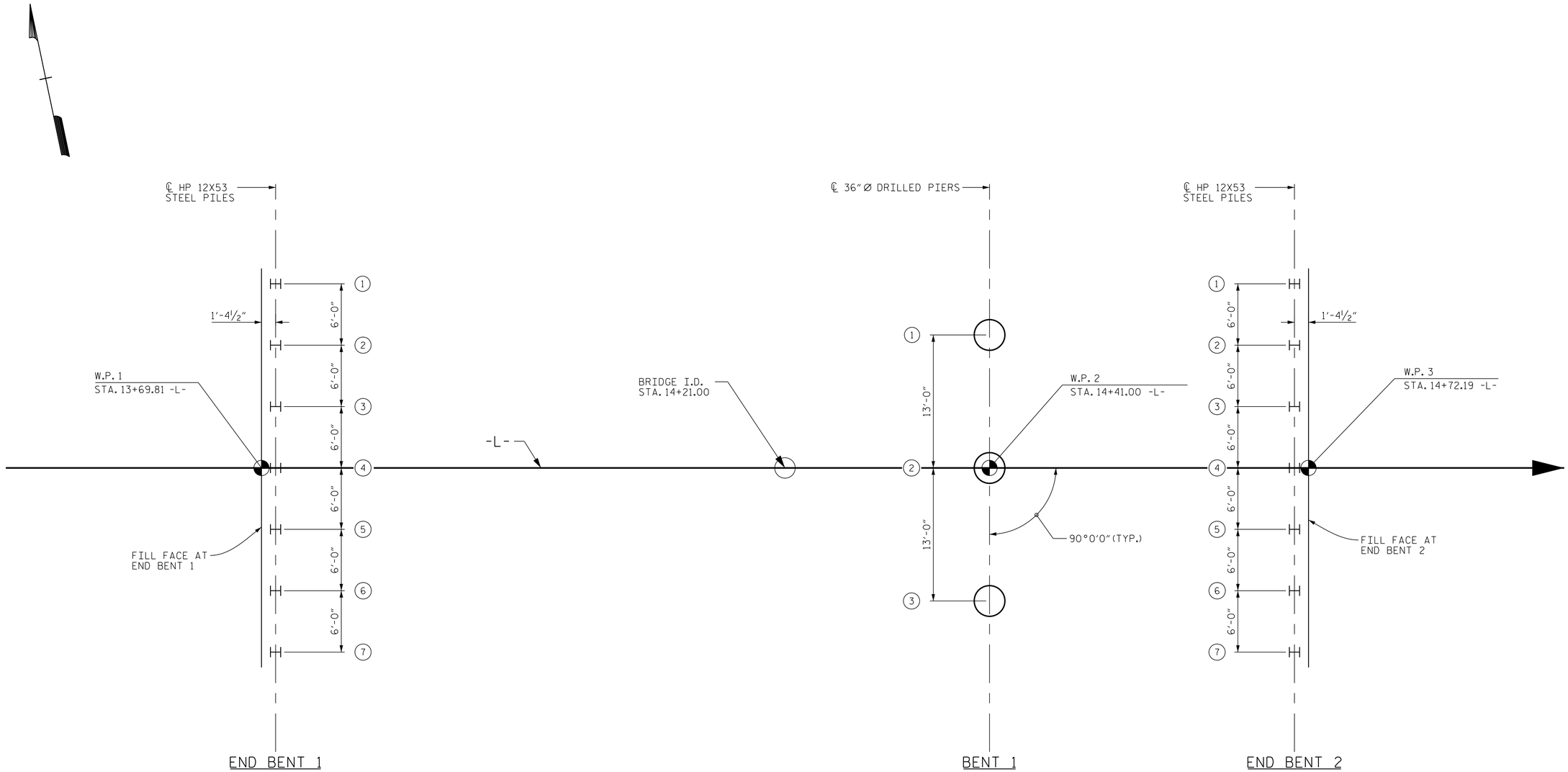

FOUNDATION LAYOUT

FOUNDATION NOTES:

1) FOR PILES, SEE PILES PROVISION AND SECTION 450 OF THE STANDARD SPECIFICATIONS.

2) FOR DRILLED PIERS, SEE SECTION 411 OF THE STANDARD SPECIFICATIONS.

3) DO NOT DEWATER DRILLED PIER EXCAVATIONS AT BENT No. 1. CLEAN THE BOTTOM OF EXCAVATIONS WITH SUBMERSIBLE PUMP OR AN AIRLIFT. WET PLACEMENT OF CONCRETE IS REQUIRED.

4) SLURRY CONSTRUCTION IS REQUIRED FOR DRILLED PIERS AT BENT No. 1.

PROJECT NO. B-5629
BRUNSWICK COUNTY
STATION: 14+21.00 -L-

SHEET 2 OF 4

NORTH CAROLINA PROFESSIONAL SEAL 29112 ENGINEER RICHARD L. COFFMAN

DocuSigned by: Richard Coffman 2/1/2023
7D4CF6F09BE7414...

DOCUMENT NOT CONSIDERED FINAL UNLESS ALL SIGNATURES COMPLETED

STATE OF NORTH CAROLINA
DEPARTMENT OF TRANSPORTATION
RALEIGH

FOUNDATION LAYOUT

LJB INC. (NC LICENSE C-4123)
1401 AVERSBORO ROAD
GARNER, NC 27529
(919) 594-6710 · LJB.COM
We think bigger.

REVISIONS						SHEET NO.
NO.	BY:	DATE:	NO.	BY:	DATE:	SI-2
1			3			TOTAL SHEETS
2			4			23

DRAWN BY :	MJM	DATE :	5/9/2022
CHECKED BY :	RLC	DATE :	5/12/2022
ENGINEER OF RECORD :	R. COFFMAN	DATE :	2/2022

401_005_B5629_SMU_FL_002.dgn
9:11:27 AM
1/24/2023

DocuSign Envelope ID: 16D1E2ED-3E13-4DD9-A1F6-2AE2BB99551D

SUMMARY OF PILE INFORMATION/INSTALLATION

(Blank entries indicate item is not applicable to structure)

End Bent/ Bent No, Pile(s) #-# (e.g., "Bent 1, Piles 1-5")	Factored Resistance per Pile TONS	Pile Cut-Off (Top of Pile) Elevation FT	Estimated Pile Lenth per Pile FT	Scour Critical Elevation FT	Driven Piles			Predrilling for Piles*			Drilled-In Piles		
					Min Pile Tip (Tip No Higher Than) Elev FT	Required Driving Resistance (RDR)** per Pile TONS	Total Pile Redrives Quantity EACH	Predrilling Length per Pile Lin FT	Predrilling Elevation (Elev Not To Predrill Below) FT	Maximum Predrilling Dia INCHES	Pile Excavation (Bottom of Hole) Elev FT	Pile Exc Not In Soil per Pile Lin FT	Pile Exc In Soil per Pile Lin FT
End Bent 1, Piles 1-7	81	12.90	65	-4	-22.0	140	7	25.9	-15.0	17			
End Bent 2, Piles 1-7	51	12.80	40	-8	-22.0	95		25.3	-14.5	17			

*Predrilling for Piles is required for end bents/bents with a predrilling length and at the Contractor's option for end bents/bents with predrilling information but no predrilling length.

$$^{**}RDR = \frac{Factored\ Resistance + Factored\ Downdrag\ Load + Factored\ Dead\ Load}{Dynamic\ Resistance\ Factor} + Nominal\ Downdrag\ Resistance + \frac{Nominal\ Scour\ Resistance}{Scour\ Resistance\ Factor}$$

SUMMARY OF PDA/PILE ORDER LENGTHS

(Blank entries indicate item is not applicable to structure)

Pile Driving Analyzer (PDA)				Pile Order Lengths	
End Bent/ Bent No	PDA Testing Required? YES or MAYBE	PDA Test Pile Length FT	Total PDA Testing Quantity EACH	End Bent/ Bent No(s)	Pile Order Length Basis* EST or PDA
End Bent 1, Piles 1-7	MAYBE	70	1		

*EST = Pile order lengths from estimated pile lengths; PDA = Pile order lengths based on PDA testing. For groups of end bents/bents with pile order lengths based on PDA testing, the first end bent/bent no. listed for each group is the representative end bent/bent with the PDA.

PILE DESIGN INFORMATION

(Blank entries indicate item is not applicable to structure)

End Bent/ Bent No, Pile(s) #-# (e.g., "Bent 1, Piles 1-5")	Factored Axial Load per Pile TONS	Factored Downdrag Load per Pile TONS	Factored Dead Load* per Pile TONS	Dynamic Resistance Factor	Nominal Downdrag Resistance per Pile TONS	Nominal Scour Resistance per Pile TONS	Scour Resistance Factor (Default = 1.00)
End Bent 1, Piles 1-7	81			0.60		4.0	1.00
End Bent 2, Piles 1-7	51			0.60		6.5	1.00

*Factored Dead Load is factored weight of pile above the ground line.

SUMMARY OF PILE ACCESSORIES

(Blank entries indicate item is not applicable to structure)

End Bent/ Bent No, Pile(s) #-# (e.g., "Bent 1, Piles 1-5")	Pipe Pile Plates Required? YES or MAYBE	Steel Pile Points			Steel Pile Tips Required? YES
		Pipe Pile Cutting Shoes Required? YES	Pipe Pile Conical Points Required? YES	H-Pile Points Required? YES	
End Bent 1, Piles 1-7				YES	
End Bent 2, Piles 1-7				YES	
TOTAL QTY:				14	

SUMMARY OF DRILLED PIER INFORMATION/INSTALLATION

(Blank entries indicate item is not applicable to structure)

End Bent/ Bent No, Pier(s) #-# (e.g., "Bent 1, Piers 1-3")	Factored Resistance per Pier TONS	Minimum Pier Tip (Tip No Higher Than) Elevation FT	Required Tip Resistance per Pier TSF	Scour Critical Elevation FT	Minimum Drilled Pier Penetration Into Rock per Pier Lin FT	Drilled Pier Length per Pier Lin FT	Drilled Pier Length Not In Soil per Pier Lin FT	Drilled Pier Length In Soil per Pier Lin FT	Permanent Steel Casing Required? YES or MAYBE	Permanent Steel Casing Tip Elevation (Elev Not To Extend Casing Below) FT	Permanent Steel Casing Length* per Pier Lin FT
Bent 1 Piers 1-3	360	-37.0	5	-4		48.7			YES	-2.0	13.7

*Permanent Steel Casing Length equals the difference between the ground line or top of drilled pier elevation, whichever is higher, and the permanent casing tip elevation.

SUMMARY OF DRILLED PIER TESTING

(Blank entries indicate item is not applicable to structure)

End Bent/ Bent No, Pier(s) #-# (e.g., "Bent 1, Piers 1-3")	Standard Penetration Test (SPT) Required? YES or MAYBE	Crosshole Sonic Logging (CSL) Required?* YES or MAYBE	Total CSL Tube Length (For All Tubes) per Pier Lin FT	Shaft Inspection Device (SID) Required? YES or MAYBE	Pile Integrity Test (PIT) Required? MAYBE
Bent 1 Piers 1-3	MAYBE	MAYBE	201	MAYBE	
TOTAL QTY:	1	1	603	1	

*CSL Tubes are required if CSL Testing is or may be required. The number of CSL Tubes per drilled pier is equal to one tube per foot of design pier diameter with at least 4 tubes per pier. The length of each CSL Tube is equal to the drilled pier length plus 1.5 ft.

PROJECT NO. B-5629

BRUNSWICK COUNTY

STATION: 14+21.00 -L-

SHEET 3 OF 4

NOTES:

1. The Pile and Drilled Pier Foundation Tables are based on the bridge substructure design and foundation recommendations sealed by a North Carolina Professional Engineer (Jinyoung Park, PE# 032171) on 03-21-2022.
2. Total Pile Driving Equipment Setup quantity (not shown in Pile Foundation Tables) equals the number of driven piles, i.e., the number of piles with a Required Driving Resistance.
3. The Engineer will determine the need for PDA Testing, Permanent Steel Casing, SPTs, CSL Testing, SID Inspections and PITs when these items may be required.

NORTH CAROLINA PROFESSIONAL SEAL 29112 ENGINEER RICHARD L. COFFMAN

DocuSigned by: Richard Coffman 2/1/2023
704CF9F036E7414...

DOCUMENT NOT CONSIDERED FINAL UNLESS ALL SIGNATURES COMPLETED

LJB INC. (NC LICENSE C-4123)
1401 AVERSBORO ROAD
GARNER, NC 27529
(919) 594-6710 · LJB.COM
We think bigger.

STATE OF NORTH CAROLINA
DEPARTMENT OF TRANSPORTATION
RALEIGH

PILE AND DRILLED PIER FOUNDATION TABLES

REVISIONS						SHEET NO.
NO.	BY:	DATE:	NO.	BY:	DATE:	SI-3
1			3			TOTAL SHEETS
2			4			23

DRAWN BY : JWG DATE : 5/9/2022
CHECKED BY : RLC DATE : 5/12/2022
ENGINEER OF RECORD : R. COFFMAN DATE : 2/2022

401_007_B5629_SMU_FN_003.dgn
9:11:29 AM
1/24/2023

DocuSign Envelope ID: 16D1E2ED-3E13-4DD9-A1F6-2AE2BB99551D

BM1: RAILROAD SPIKE SET IN 12" OAK, STA. 13+74.00 -L-, 59.11' RT., ELEV. = 14.07'
BM2: RAILROAD SPIKE SET IN 24" CYPRESS, STA. 14+71.63 -L-, 46.76' LT, ELEV. = 14.14'

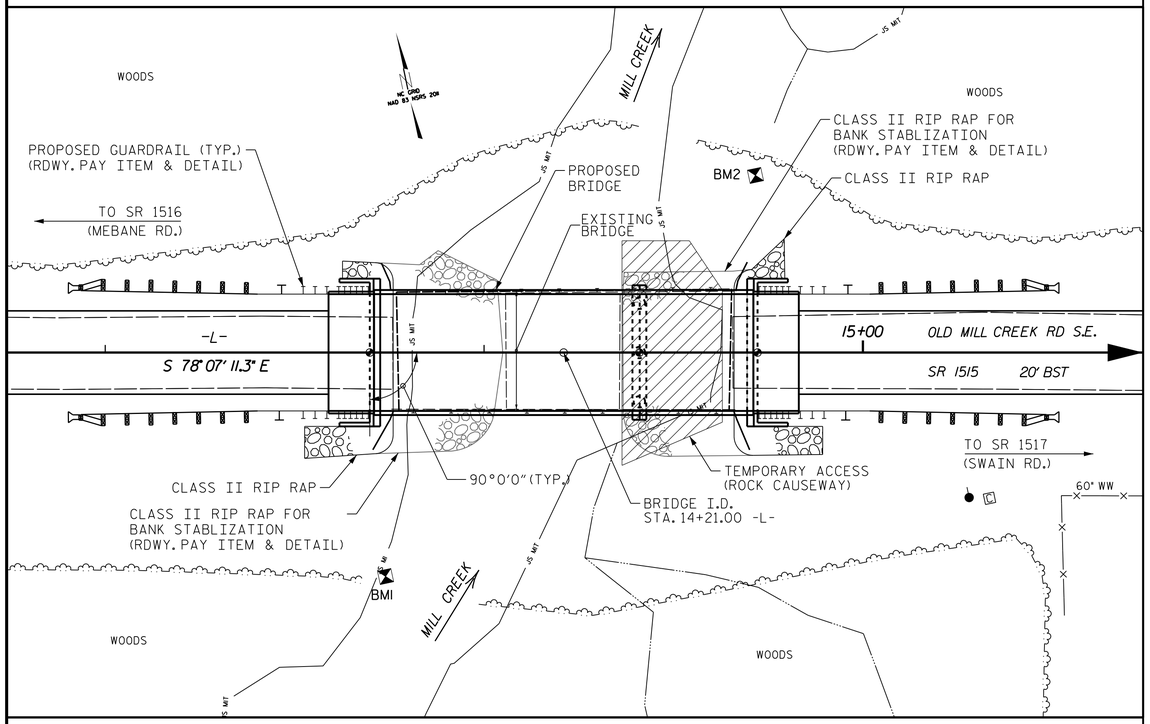

LOCATION SKETCH

FOR UTILITY INFORMATION, SEE UTILITY PLANS AND SPECIAL PROVISIONS.

TOTAL BILL OF MATERIAL

	CONSTRUCTION, MAINTENANCE, & REMOVAL OF TEMPORARY ACCESS	REMOVAL OF EXISTING STRUCTURE @ STA. 14+21.00 -L-	ASBESTOS ASSESSMENT	3'-0" Ø DRILLED PIERS	PERMANENT STEEL CASING FOR 3'-0" Ø DRILLED PIER	PDA TESTING	SID INSPECTIONS	SPT TESTING	CSL TESTING	UNCLASSIFIED STRUCTURE EXCAVATION
	LUMP SUM	LUMP SUM	LUMP SUM	LIN. FT.	LIN. FT.	NO.	NO.	NO.	NO.	LUMP SUM
SUPERSTRUCTURE										LUMP SUM
END BENT NO. 1						1				
BENT NO. 1				146.1	41.1		1	1	1	
END BENT NO. 2										
TOTAL	LUMP SUM	LUMP SUM	LUMP SUM	146.1	41.1	1	1	1	1	LUMP SUM

TOTAL BILL OF MATERIAL

	CLASS AA CONCRETE	BRIDGE APPROACH SLABS	EPOXY COATED REINFORCING STEEL	EPOXY COATED SPIRAL COLUMN REINFORCING STEEL	PILE DRIVING EQUIPMENT SETUP FOR HP 12 X 53 STEEL PILES	HP 12 X 53 STEEL PILES		STEEL PILE POINTS	PREDILLING FOR PILES	PILE REDRIVES	VERTICAL CONCRETE BARRIER RAIL	PLAIN RIP RAP CLASS II (2'-0" THICK)	GEOTEXTILE FOR DRAINAGE	ELASTOMERIC BEARINGS	3'-0" X 2'-0" PRESTRESSED CONCRETE CORED SLABS		3'-0" X 1'-9" PRESTRESSED CONCRETE CORED SLABS	
	CU. YDS.	LUMP SUM	LBS.	LBS.	NO.	NO.	LIN.FT.	NO.	LIN. FT.	NO.	LIN.FT.	TONS	SQ.YDS.	LUMP SUM	NO.	LIN.FT.	NO.	LIN.FT.
SUPERSTRUCTURE		LUMP SUM									200.50			LUMP SUM	11	770	11	330
END BENT NO. 1	21.8		2592		7	7	455	7	181.3	4		63	69.4					
BENT NO. 1	16.0		11369	2670														
END BENT NO. 2	21.6		2584		7	7	280	7	177.1	3		61	67.3					
TOTAL	59.4	LUMP SUM	16545	2670	14	14	735	14	358.4	7	200.50	124	136.7	LUMP SUM	11	770	11	330

NOTES

ASSUMED LIVE LOAD = HL-93 OR ALTERNATE LOADING.

THIS BRIDGE HAS BEEN DESIGNED IN ACCORDANCE WITH THE AASHTO LRFD BRIDGE DESIGN SPECIFICATIONS.

THIS BRIDGE IS LOCATED IN SEISMIC ZONE 1.

THIS STRUCTURE CONTAINS THE NECESSARY CORROSION PROTECTION REQUIRED FOR A CORROSIVE SITE.

FOR OTHER DESIGN DATA AND GENERAL NOTES, SEE SHEET SN.

FOR SUBMITTAL OF WORKING DRAWINGS, SEE SPECIAL PROVISIONS.

FOR FALSEWORK AND FORMWORK, SEE SPECIAL PROVISIONS.

FOR CRANE SAFETY, SEE SPECIAL PROVISIONS.

FOR GROUT FOR STRUCTURES, SEE SPECIAL PROVISIONS.

AT THE CONTRACTOR'S OPTION, AND UPON REMOVAL OF THE CAUSEWAY, THE CLASS II RIP RAP USED IN THE CAUSEWAY MAY BE PLACED AS RIP RAP SLOPE PROTECTION. SEE SPECIAL PROVISIONS FOR CONSTRUCTION, MAINTENANCE AND REMOVAL OF TEMPORARY ACCESS AT STATION 14+21.00 -L-.

CLASS AA CONCRETE SHALL BE USED IN ALL CAST-IN-PLACE COLUMNS, DRILLED PIERS, BENT CAPS AND END BENT CAPS, AND SHALL CONTAIN CALCIUM NITRITE CORROSION INHIBITOR.

ALL BAR SUPPORTS USED IN THE BARRIER RAIL, BENT CAPS, END BENT CAPS, COLUMNS, DRILLED PIERS AND ALL INCIDENTAL REINFORCING STEEL SHALL BE EPOXY COATED IN ACCORDANCE WITH THE STANDARD SPECIFICATIONS.

THE CONCRETE IN THE COLUMNS, DRILLED PRIERS AND BENT CAPS OF BENT NO. 1 SHALL CONTAIN SILICA FUME. SILICA FUME SHALL BE SUBSTITUTED FOR 5% OF THE PORTLAND CEMENT BY WEIGHT. IF THE OPTION OF ARTICLE 1024-1 OF THE STANDARD SPECIFICATIONS TO PARTIALLY SUBSTITUTE CLASS F FLY ASH FOR PORTLAND CEMENT IS EXERCISED, THEN THE RATE OF FLY ASH SUBSTITUTION SHALL BE REDUCED TO 1.0 LB OF FLY ASH PER 1.0 LB OF CEMENT. NO PAYMENT WILL BE MADE FOR THIS SUBSTITUTION AS IT IS CONSIDERED INCIDENTAL TO THE VARIOUS PAY ITEMS.

THE MATERIAL SHOWN IN THE CROSS-HATCHED AREA ON SHEET 1 OF 4 SHALL BE EXCAVATED FOR A DISTANCE OF 29 FT± LEFT AND 27 FT± RIGHT OF CENTERLINE ROADWAY AS DIRECTED BY THE ENGINEER. THIS WORK WILL BE PAID FOR AT THE CONTRACT LUMP SUM PRICE FOR UNCLASSIFIED STRUCTURE EXCAVATION. SEE SECTION 412 OF THE STANDARD SPECIFICATIONS.

THE EXISTING STRUCTURE CONSISTING OF (3) PRESTRESSED CONCRETE CHANNEL SPANS (30.7'-30'-30.7'); CLEAR ROADWAY WIDTH OF 29'-3" ASPHALT WEARING COURSE ON PRECAST CONCRETE CAPS WITH TIMBER PILE BENTS AND LOCATED ALONG CENTERLINE OF ROAD SHALL BE REMOVED. THE EXISTING BRIDGE IS PRESENTLY POSTED FOR LOAD LIMIT. SHOULD THE STRUCTURAL INTEGRITY OF THE BRIDGE DETERIORATE DURING CONSTRUCTION OF THE PROPOSED BRIDGE, THE LOAD LIMIT MAY BE REDUCED AS FOUND NECESSARY DURING THE LIFE OF THE PROJECT.

THE SUBSTRUCTURE OF THE EXISTING BRIDGE INDICATED ON THE PLANS IS FROM THE BEST INFORMATION AVAILABLE. SINCE THIS INFORMATION IS SHOWN FOR THE CONVENIENCE OF THE CONTRACTOR, THE CONTRACTOR SHALL HAVE NO CLAIM WHATSOEVER AGAINST THE DEPARTMENT OF TRANSPORTATION FOR ANY DELAYS OR ADDITIONAL COST INCURRED BASED ON DIFFERENCES BETWEEN THE EXISTING BRIDGE SUBSTRUCTURE SHOWN ON THE PLANS AND THE ACTUAL CONDITIONS AT THE PROJECT SITE.

REMOVAL OF THE EXISTING BRIDGE SHALL BE PERFORMED IN A MANNER THAT PREVENTS DEBRIS FROM FALLING INTO THE WATER. THE CONTRACTOR SHALL SUBMIT DEMOLITION PLANS FOR REVIEW AND REMOVE THE BRIDGE IN ACCORDANCE WITH ARTICLE 402-2 OF THE STANDARD SPECIFICATIONS.

THIS STRUCTURE HAS BEEN DESIGNED IN ACCORDANCE WITH "HEC 18-EVALUATING SCOUR AT BRIDGES."

THE CONTRACTOR MAY USE ADHESIVELY ANCHORED ANCHOR BOLTS AND DOWELS IN PLACE OF CAST-IN-PLACE OR PRESET ANCHORS. NO FIELD TESTING IS REQUIRED. FOR ADHESIVELY ANCHORED ANCHOR BOLTS OR DOWELS, SEE SECTION 420-13 OF THE STANDARD SPECIFICATIONS.

FOR EROSION CONTROL MEASURES, SEE EROSION CONTROL PLANS.

ASPHALT WEARING SURFACE IS INCLUDED IN ROADWAY QUANTITY ON ROADWAY PLANS.

FOR ASBESTOS ASSESSMENT FOR BRIDGE DEMOLITION AND RENOVATION ACTIVITIES, SEE SPECIAL PROVISIONS.

I HEREBY CERTIFY THESE PLANS ARE THE AS-BUILT PLANS

PROJECT NO. B-5629
BRUNSWICK COUNTY
STATION: 14+21.00 -L-

SHEET 4 OF 4

NORTH CAROLINA PROFESSIONAL SEAL 29112 ENGINEER RICHARD L. COFFMAN

DocuSigned by: Richard Coffman 2/1/2023
704CF9F03BE7414...

DOCUMENT NOT CONSIDERED FINAL UNLESS ALL SIGNATURES COMPLETED

STATE OF NORTH CAROLINA
DEPARTMENT OF TRANSPORTATION
RALEIGH

GENERAL DRAWING FOR BRIDGE OVER MILL CREEK ON SR 1515 BETWEEN SR 1516 AND SR 1517

LJB INC. (NC LICENSE C-4123)
1401 AVERSBORO ROAD
GARNER, NC 27529
(919) 594-6710 · LJB.COM
We think bigger.

REVISIONS						SHEET NO.
NO.	BY:	DATE:	NO.	BY:	DATE:	SI-4
1			3			TOTAL SHEETS
2			4			23

DRAWN BY : MJM DATE : 5/9/2022
CHECKED BY : RLC DATE : 5/12/2022
ENGINEER OF RECORD : R. COFFMAN DATE : 2/2022

401_009_B5629_SMU_GD2_004.dgn
9:11:49 AM
1/24/2023

DocuSign Envelope ID: 16D1E2ED-3E13-4DD9-A1F6-2AE2BB99551D

LOAD AND RESISTANCE FACTOR RATING (LRFD) SUMMARY FOR PRESTRESSED CONCRETE GIRDERS

LEVEL		VEHICLE	WEIGHT (W) (TONS)	CONTROLLING LOAD RATING	MINIMUM RATING FACTORS (RF)	TONS = W X RF	STRENGTH I LIMIT STATE											SERVICE III LIMIT STATE						COMMENT NUMBER
							LIVELOAD FACTORS	MOMENT					SHEAR					LIVELOAD FACTORS	MOMENT					
								DISTRIBUTION FACTORS (DF)	RATING FACTOR	SPAN	GIRDER LOCATION	DISTANCE FROM LEFT END OF SPAN (ft)	DISTRIBUTION FACTORS (DF)	RATING FACTOR	SPAN	GIRDER LOCATION	DISTANCE FROM LEFT END OF SPAN (ft)		DISTRIBUTION FACTORS (DF)	RATING FACTOR	SPAN	GIRDER LOCATION	DISTANCE FROM LEFT END OF SPAN (ft)	
DESIGN LOAD RATING		HL-93(Inv)	N/A	**1**	1.006	--	1.75	0.273	1.03	70'	EL	34.5	0.507	1.32	70'	EL	6.9	0.80	0.273	**1.01**	70'	EL	**34.5**	
		HL-93(Opr)	N/A	--	1.341	--	1.35	0.273	1.34	70'	EL	34.5	0.507	1.72	70'	EL	6.9	N/A	--	--	--	--	--	
		HS-20(Inv)	36.000	**2**	1.306	47.02	1.75	0.273	1.34	70'	EL	34.5	0.507	1.65	70'	EL	6.9	0.80	0.273	**1.31**	70'	EL	**34.5**	
		HS-20(Opr)	36.000	--	1.74	62.64	1.35	0.273	1.74	70'	EL	34.5	0.507	2.14	70'	EL	6.9	N/A	--	--	--	--	--	
LEGAL LOAD RATING	SV	SNSH	13.500	--	2.917	39.379	1.4	0.273	3.75	70'	EL	34.5	0.507	4.87	70'	EL	6.9	0.80	0.273	2.92	70'	EL	34.5	
		SNGARBS2	20.000	--	2.187	43.741	1.4	0.273	2.81	70'	EL	34.5	0.507	3.47	70'	EL	6.9	0.80	0.273	2.19	70'	EL	34.5	
		SNAGRIS2	22.000	--	2.077	45.69	1.4	0.273	2.67	70'	EL	34.5	0.507	3.23	70'	EL	6.9	0.80	0.273	2.08	70'	EL	34.5	
		SNCOTTS3	27.250	--	1.452	39.565	1.4	0.273	1.87	70'	EL	34.5	0.507	2.43	70'	EL	6.9	0.80	0.273	1.45	70'	EL	34.5	
		SNAGGRS4	34.925	--	1.218	42.554	1.4	0.273	1.57	70'	EL	34.5	0.507	2.03	70'	EL	6.9	0.80	0.273	1.22	70'	EL	34.5	
		SNS5A	35.550	--	1.191	42.346	1.4	0.273	1.53	70'	EL	34.5	0.507	2.06	70'	EL	6.9	0.80	0.273	1.19	70'	EL	34.5	
		SNS6A	39.950	--	1.095	43.747	1.4	0.273	1.41	70'	EL	34.5	0.507	1.88	70'	EL	6.9	0.80	0.273	1.10	70'	EL	34.5	
		SNS7B	42.000	--	1.043	43.801	1.4	0.273	1.34	70'	EL	34.5	0.507	1.85	70'	EL	6.9	0.80	0.273	1.04	70'	EL	34.5	
	TTST	TNAGRIT3	33.000	--	1.336	44.087	1.4	0.273	1.72	70'	EL	34.5	0.507	2.23	70'	EL	6.9	0.80	0.273	1.34	70'	EL	34.5	
		TNT4A	33.075	--	1.342	44.401	1.4	0.273	1.72	70'	EL	34.5	0.507	2.17	70'	EL	6.9	0.80	0.273	1.34	70'	EL	34.5	
		TNT6A	41.600	--	1.1	45.746	1.4	0.273	1.41	70'	EL	34.5	0.507	1.98	70'	EL	6.9	0.80	0.273	1.10	70'	EL	34.5	
		TNT7A	42.000	--	1.106	46.462	1.4	0.273	1.42	70'	EL	34.5	0.507	1.94	70'	EL	6.9	0.80	0.273	1.11	70'	EL	34.5	
		TNT7B	42.000	--	1.147	48.18	1.4	0.273	1.47	70'	EL	34.5	0.507	1.8	70'	EL	6.9	0.80	0.273	1.15	70'	EL	34.5	
		TNAGRIT4	43.000	--	1.089	46.838	1.4	0.273	1.4	70'	EL	34.5	0.507	1.74	70'	EL	6.9	0.80	0.273	1.09	70'	EL	34.5	
		TNAGT5A	45.000	--	1.026	46.175	1.4	0.273	1.32	70'	EL	34.5	0.507	1.74	70'	EL	6.9	0.80	0.273	1.03	70'	EL	34.5	
		TNAGT5B	45.000	**3**	1.013	45.579	1.4	0.273	1.3	70'	EL	34.5	0.507	1.66	70'	EL	6.9	0.80	0.273	**1.01**	70'	EL	**34.5**	

LOAD FACTORS:

DESIGN LOAD RATING FACTORS	LIMIT STATE	γ_{DC}	γ_{DW}
	STRENGTH I	1.25	1.50
	SERVICE III	1.00	1.00

NOTES:

MINIMUM RATING FACTORS ARE BASED ON THE STRENGTH I AND SERVICE III LIMIT STATES.

ALLOWABLE STRESSES FOR SERVICE III LIMIT STATE ARE AS REQUIRED FOR DESIGN.

COMMENTS:

1.
2.
3.
4.

(#) CONTROLLING LOAD RATING

(1) DESIGN LOAD RATING (HL-93)

(2) DESIGN LOAD RATING (HS-20)

(3) LEGAL LOAD RATING **

** SEE CHART FOR VEHICLE TYPE

GIRDER LOCATION

I - INTERIOR GIRDER
EL - EXTERIOR LEFT GIRDER
ER - EXTERIOR RIGHT GIRDER

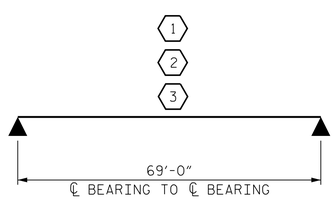

LRFR SUMMARY

FOR SPAN 'A'

PROJECT NO. B-5629

BRUNSWICK COUNTY

STATION: 14+21.00 -L-

SHEET 1 OF 2

NORTH CAROLINA PROFESSIONAL SEAL 29112 ENGINEER RICHARD L. COFFMAN

DocuSigned by: Richard Coffman 7D4CF9F03BE7414... 2/1/2023

DOCUMENT NOT CONSIDERED FINAL UNLESS ALL SIGNATURES COMPLETED

LJB INC. (NC LICENSE C-4123)
1401 AVERSBORO ROAD
GARNER, NC 27529
(919) 594-6710 · LJB.COM
We think bigger.

STATE OF NORTH CAROLINA
DEPARTMENT OF TRANSPORTATION
RALEIGH

LRFR SUMMARY FOR 70' CORED SLAB UNIT 90° SKEW

(NON-INTERSTATE TRAFFIC)

REVISIONS						SHEET NO.
NO.	BY:	DATE:	NO.	BY:	DATE:	SI-5
1			3			TOTAL SHEETS
2			4			23

DRAWN BY : MJM DATE : 5/2/2022
CHECKED BY : RLC DATE : 5/2/2022
ENGINEER OF RECORD : R. COFFMAN DATE : 2/2022

401_011_B5629_SMU_LRFR1_005.dgn
9:11:51 AM
1/24/2023

DocuSign Envelope ID: 16D1E2ED-3E13-4DD9-A1F6-2AE2BB99551D

LOAD AND RESISTANCE FACTOR RATING (LRFD) SUMMARY FOR PRESTRESSED CONCRETE GIRDERS

LEVEL		VEHICLE	WEIGHT (W) (TONS)	CONTROLLING LOAD RATING	MINIMUM RATING FACTORS (RF)	TONS = W X RF	STRENGTH I LIMIT STATE											SERVICE III LIMIT STATE						COMMENT NUMBER
							LIVELOAD FACTORS	MOMENT					SHEAR					LIVELOAD FACTORS	MOMENT					
								DISTRIBUTION FACTORS (DF)	RATING FACTOR	SPAN	GIRDER LOCATION	DISTANCE FROM LEFT END OF SPAN (ft)	DISTRIBUTION FACTORS (DF)	RATING FACTOR	SPAN	GIRDER LOCATION	DISTANCE FROM LEFT END OF SPAN (ft)		DISTRIBUTION FACTORS (DF)	RATING FACTOR	SPAN	GIRDER LOCATION	DISTANCE FROM LEFT END OF SPAN (ft)	
DESIGN LOAD RATING		HL-93(Inv)	N/A	1	1.037	--	1.75	0.283	1.83	30'	EL	14.5	0.574	**1.04**	30'	EL	**1.45**	0.80	0.283	1.58	30'	EL	14.5	
		HL-93(Opr)	N/A	--	1.344	--	1.35	0.283	2.38	30'	EL	14.5	0.574	1.34	30'	EL	1.45	N/A	--	--	--	--	--	
		HS-20(Inv)	36.000	2	1.183	42.587	1.75	0.283	2.53	30'	EL	11.6	0.574	**1.18**	30'	EL	**1.45**	0.80	0.283	2.20	30'	EL	11.6	
		HS-20(Opr)	36.000	--	1.533	55.205	1.35	0.283	3.28	30'	EL	11.6	0.574	1.53	30'	EL	1.45	N/A	--	--	--	--	--	
LEGAL LOAD RATING	SV	SNSH	13.500	--	2.895	39.081	1.4	0.283	5.18	30'	EL	14.5	0.574	2.89	30'	EL	1.45	0.80	0.283	3.56	30'	EL	14.5	
		SNGARBS2	20.000	--	2.240	44.792	1.4	0.283	4.53	30'	EL	11.6	0.574	2.24	30'	EL	1.45	0.80	0.283	3.15	30'	EL	11.6	
		SNAGRIS2	22.000	--	2.157	47.463	1.4	0.283	4.6	30'	EL	11.6	0.574	2.16	30'	EL	1.45	0.80	0.283	3.20	30'	EL	11.6	
		SNCOTTS3	27.250	--	1.462	39.849	1.4	0.283	2.6	30'	EL	14.5	0.574	1.46	30'	EL	1.45	0.80	0.283	1.79	30'	EL	14.5	
		SNAGGRS4	34.925	--	1.346	46.999	1.4	0.283	2.5	30'	EL	14.5	0.574	1.35	30'	EL	1.45	0.80	0.283	1.72	30'	EL	14.5	
		SNS5A	35.550	--	1.427	50.733	1.4	0.283	2.42	30'	EL	14.5	0.574	1.43	30'	EL	1.45	0.80	0.283	1.67	30'	EL	14.5	
		SNS6A	39.950	--	1.341	53.59	1.4	0.283	2.29	30'	EL	14.5	0.574	1.34	30'	EL	1.45	0.80	0.283	1.58	30'	EL	14.5	
		SNS7B	42.000	--	1.369	57.505	1.4	0.283	2.23	30'	EL	14.5	0.574	1.37	30'	EL	1.45	0.80	0.283	1.53	30'	EL	14.5	
	TTST	TNAGRIT3	33.000	--	1.593	52.58	1.4	0.283	2.97	30'	EL	14.5	0.574	1.59	30'	EL	1.45	0.80	0.283	2.04	30'	EL	14.5	
		TNT4A	33.075	--	1.483	49.043	1.4	0.283	2.82	30'	EL	14.5	0.574	1.48	30'	EL	1.45	0.80	0.283	1.94	30'	EL	14.5	
		TNT6A	41.600	--	1.433	59.622	1.4	0.283	2.56	30'	EL	14.5	0.574	1.43	30'	EL	1.45	0.80	0.283	1.76	30'	EL	14.5	
		TNT7A	42.000	--	1.363	57.264	1.4	0.283	2.64	30'	EL	14.5	0.574	1.36	30'	EL	1.45	0.80	0.283	1.82	30'	EL	14.5	
		TNT7B	42.000	--	1.331	55.915	1.4	0.283	2.49	30'	EL	14.5	0.574	1.33	30'	EL	1.45	0.80	0.283	1.72	30'	EL	14.5	
		TNAGRIT4	43.000	--	1.287	55.356	1.4	0.283	2.58	30'	EL	14.5	0.574	1.29	30'	EL	1.45	0.80	0.283	1.78	30'	EL	14.5	
		TNAGT5A	45.000	--	1.381	62.151	1.4	0.283	2.5	30'	EL	14.5	0.574	1.38	30'	EL	1.45	0.80	0.283	1.72	30'	EL	14.5	
		TNAGT5B	45.000	3	1.212	54.54	1.4	0.283	2.41	30'	EL	11.6	0.574	**1.21**	30'	EL	**1.45**	0.80	0.283	1.66	30'	EL	11.6	

LOAD FACTORS:

	LIMIT STATE	γ_{DC}	γ_{DW}
DESIGN LOAD RATING FACTORS	STRENGTH I	1.25	1.50
	SERVICE III	1.00	1.00

NOTES:

MINIMUM RATING FACTORS ARE BASED ON THE STRENGTH I AND SERVICE III LIMIT STATES.

ALLOWABLE STRESSES FOR SERVICE III LIMIT STATE ARE AS REQUIRED FOR DESIGN.

COMMENTS:

1.
2.
3.
4.

(#) CONTROLLING LOAD RATING

(1) DESIGN LOAD RATING (HL-93)

(2) DESIGN LOAD RATING (HS-20)

(3) LEGAL LOAD RATING **

** SEE CHART FOR VEHICLE TYPE

GIRDER LOCATION

I - INTERIOR GIRDER
EL - EXTERIOR LEFT GIRDER
ER - EXTERIOR RIGHT GIRDER

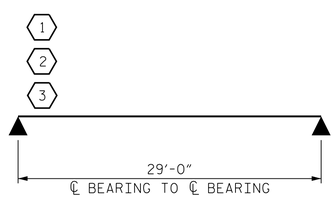

LRFR SUMMARY

FOR SPAN 'B'

PROJECT NO. B-5629

BRUNSWICK COUNTY

STATION: 14+21.00 -L-

SHEET 2 OF 2

NORTH CAROLINA PROFESSIONAL SEAL 29112 ENGINEER RICHARD L. COFFMAN

DocuSigned by: Richard Coffman 2/1/2023

DOCUMENT NOT CONSIDERED FINAL UNLESS ALL SIGNATURES COMPLETED

STATE OF NORTH CAROLINA
DEPARTMENT OF TRANSPORTATION
RALEIGH

LRFR SUMMARY FOR 30' CORED SLAB UNIT 90° SKEW

(NON-INTERSTATE TRAFFIC)

REVISIONS						SHEET NO.
NO.	BY:	DATE:	NO.	BY:	DATE:	SI-6
1			3			TOTAL SHEETS
2			4			23

LJB INC. (NC LICENSE C-4123)
1401 AVERSBORO ROAD
GARNER, NC 27529
(919) 594-6710 · LJB.COM
We think bigger.

DRAWN BY : JWG DATE : 5/2/2022
CHECKED BY : RLC DATE : 5/2/2022
ENGINEER OF RECORD : R. COFFMAN DATE : 2/2022

401_013_B5629_SMU_LRFR2_006.dgn 9:11:54 AM 1/24/2023

DocuSign Envelope ID: 16D1E2ED-3E13-4DD9-A1F6-2AE2BB99551D

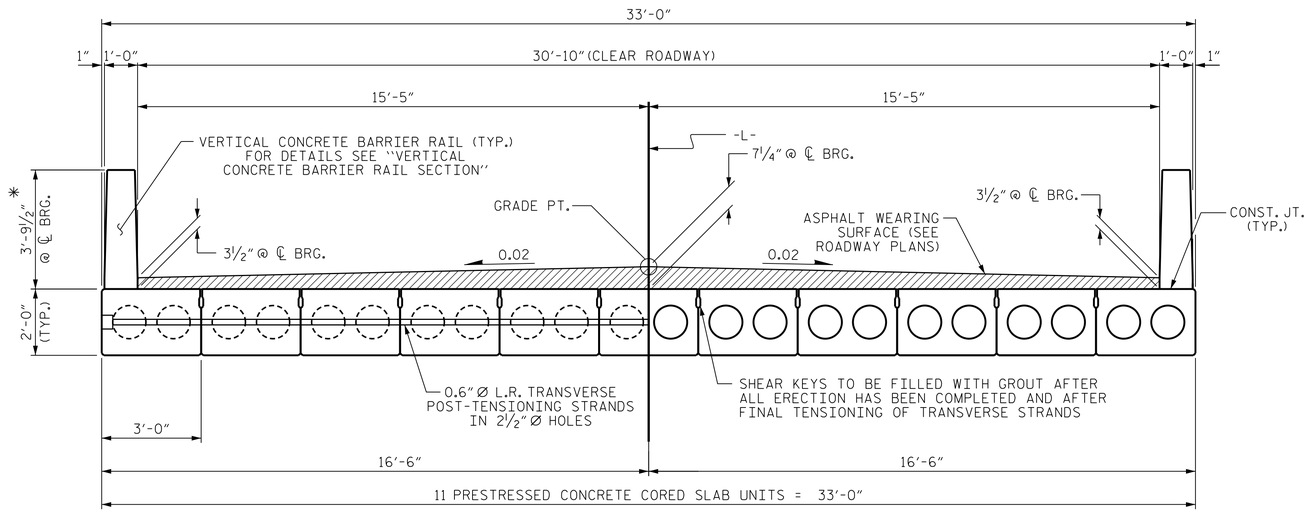

HALF SECTION
AT INTERMEDIATE DIAPHRAGMS

TYPICAL SECTION

HALF SECTION
THROUGH VOIDS

* - THE MAXIMUM BARRIER RAIL HEIGHT AND ASPHALT THICKNESS IS SHOWN. THE HEIGHT OF THE BARRIER RAIL AND ASPHALT THICKNESS VARIES WHILE THE TOP OF THE BARRIER RAIL FOLLOWS THE PROFILE OF THE GUTTERLINE. FOR RAIL HEIGHT DETAILS AND ASPHALT THICKNESS, SEE THE "VERTICAL CONCRETE BARRIER RAIL SECTION" DETAIL.

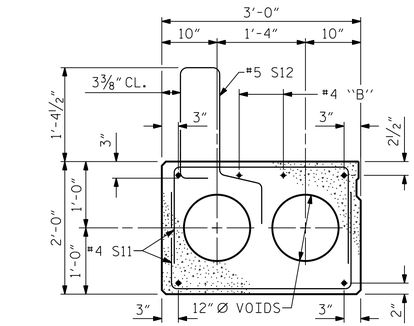

EXTERIOR SLAB SECTION

(FOR PRESTRESSED STRAND LAYOUT, SEE INTERIOR SLAB SECTION.)

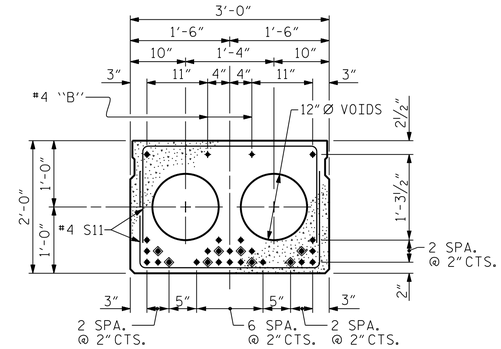

INTERIOR SLAB SECTION (70' UNIT)

(28 STRANDS REQUIRED)

0.6'' Ø LOW RELAXATION STRAND LAYOUT

◈ BOND SHALL BE BROKEN ON THESE STRANDS FOR A DISTANCE OF 12'-0" FROM END OF CORED SLAB UNIT. SEE STANDARD SPECIFICATIONS, ARTICLE 1078-7.

DEBONDING LEGEND

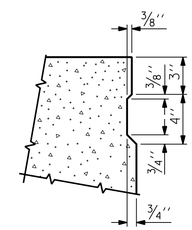

SHEAR KEY DETAIL

NOTE: OMIT SHEAR KEY ON OUTSIDE FACE OF EXTERIOR CORED SLABS.

PERMITTED THREADED INSERT CAST IN OUTSIDE FACE OF EXTERIOR UNIT AND RECESSED ⅜". SIZE TO BE DETERMINED BY CONTRACTOR.

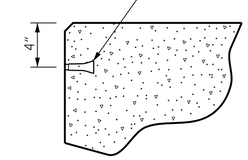

THREADED INSERT DETAIL

FIXED END

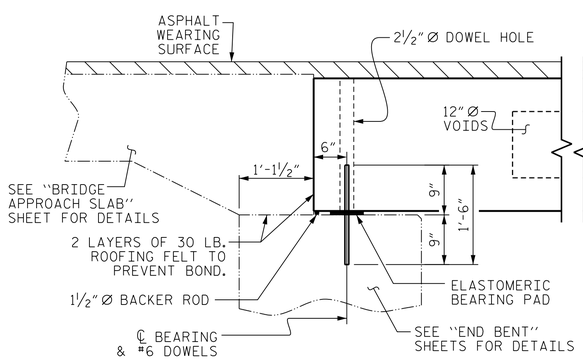

SECTION AT END BENT No. 1

FIXED END FIXED END

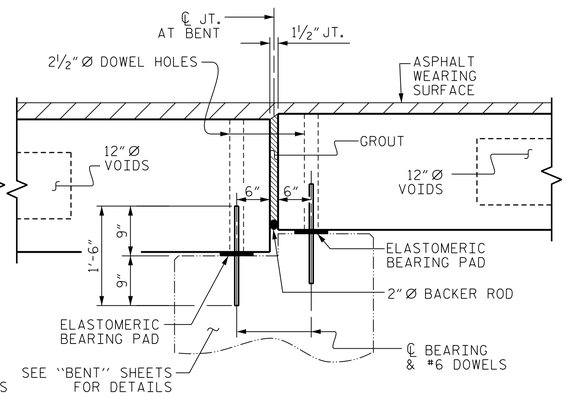

SECTION AT BENT No. 1

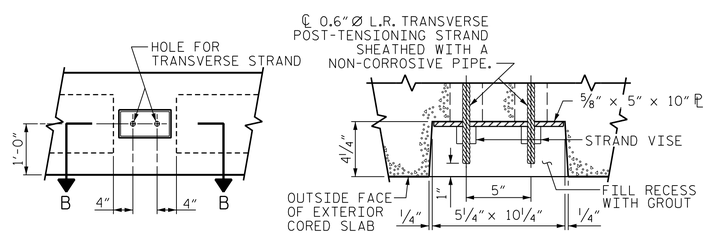

GROUTED RECESS AT END OF POST-TENSIONED STRAND•CORED SLABS

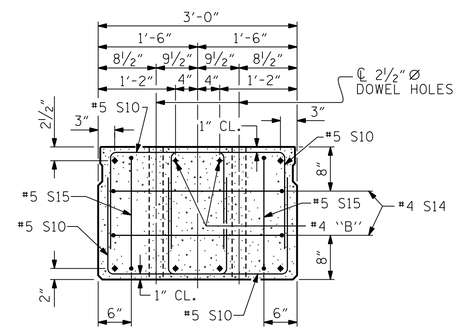

END ELEVATION

SHOWING PLACEMENT OF DOUBLE STIRRUPS AND LOCATION OF DOWEL HOLES. (STRAND LAYOUT NOT SHOWN.) INTERIOR SLAB UNIT SHOWN-EXTERIOR SLAB UNIT SIMILAR EXCEPT SHEAR KEY LOCATION.

PROJECT NO. B-5629
BRUNSWICK COUNTY
STATION: 14+21.00 -L-

SHEET 1 OF 4

STATE OF NORTH CAROLINA
DEPARTMENT OF TRANSPORTATION
RALEIGH

3'-0'' X 2'-0'' PRESTRESSED CONCRETE CORED SLAB UNIT 90° SKEW (SPAN A)

NORTH CAROLINA PROFESSIONAL SEAL 29112 ENGINEER RICHARD L. COFFMAN

DocuSigned by: Richard Coffman 7D4CF9F036E7414... 2/1/2023

DOCUMENT NOT CONSIDERED FINAL UNLESS ALL SIGNATURES COMPLETED

LJB INC. (NC LICENSE C-4123)
1401 AVERSBORO ROAD
GARNER, NC 27529
(919) 594-6710 · LJB.COM
We think bigger.

REVISIONS						
NO.	BY:	DATE:	NO.	BY:	DATE:	
1			3			
2			4			

SHEET NO. SI-7
TOTAL SHEETS 23

DRAWN BY :	MJM	DATE :	5/2/2022
CHECKED BY :	RLC	DATE :	5/9/2022
ENGINEER OF RECORD :	R. COFFMAN	DATE :	2/2022

401_015_B5629_SMU_CS1_007.dgn
1/24/2023 9:11:56 AM

DocuSign Envelope ID: 16D1E2ED-3E13-4DD9-A1F6-2AE2BB99551D

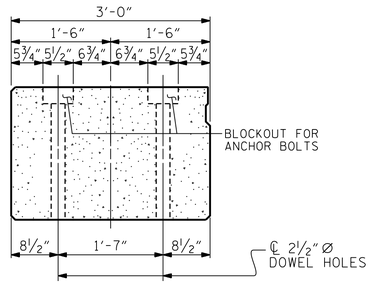

END ELEVATION

SHOWING LOCATION OF BLOCKOUT FOR ANCHOR BOLTS AND DOWEL HOLES.

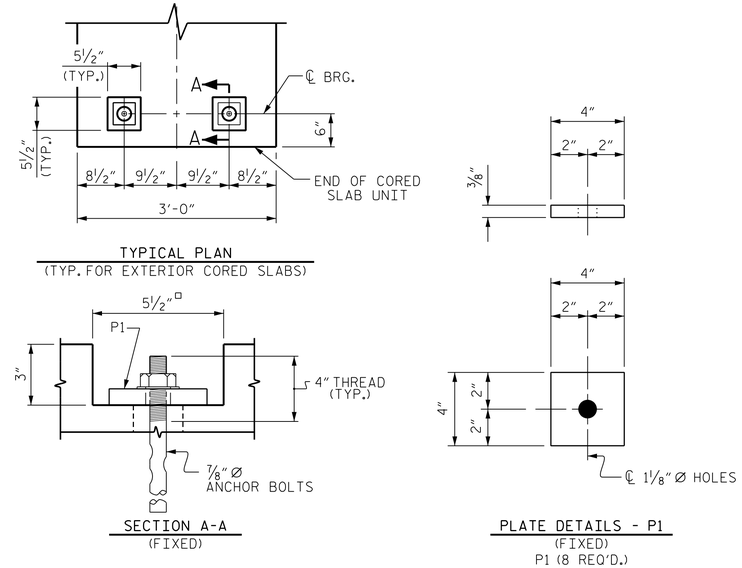

BLOCKOUT DETAIL FOR ANCHOR BOLTS

(TYPICAL FOR EXTERIOR CORED SLABS)

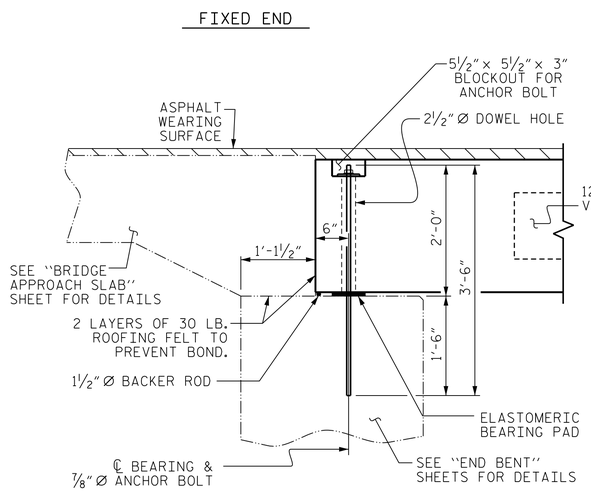

SECTION AT END BENT No. 1

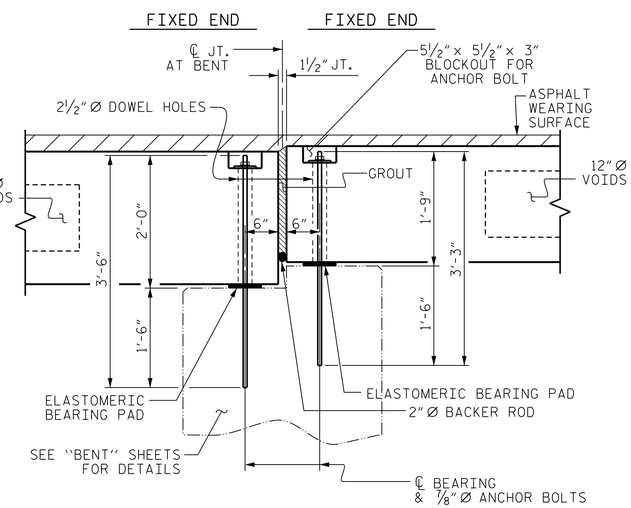

SECTION AT BENT No. 1

NOTES

AT ALL FIXED AND EXPANSION ENDS OF EXTERIOR CORED SLAB SECTIONS WITH HOLD-DOWN ANCHOR BOLTS, NUTS FOR ANCHOR BOLTS SHALL BE FINGER-TIGHTENED AND THEN BACKED OFF ½ TURN. THE THREAD OF THE NUT AND BOLT SHALL THEN BE BURRED WITH A SHARP POINTED TOOL.

THE 2½" Ø DOWEL HOLES AT FIXED ENDS OF EXTERIOR CORED SLAB SECTIONS WITH HOLD-DOWN ANCHOR BOLTS SHALL BE FILLED WITH NON-SHRINK GROUT TO THE BOTTOM OF THE ANCHOR BOLT BLOCKOUT PRIOR TO INSTALLING THE ANCHOR PLATES, WASHERS, AND NUTS. THE 2½" Ø DOWEL HOLES AT EXPANSION ENDS OF EXTERIOR CORED SLAB SECTIONS WITH HOLD-DOWN ANCHOR BOLTS SHALL BE FILLED WITH JOINT SEALER MATERIAL TO THE BOTTOM OF THE ANCHOR BOLT BLOCKOUT PRIOR TO INSTALLING THE ANCHOR PLATES, WASHERS, AND NUTS.

THE ANCHOR BOLT BLOCKOUTS IN EXTERIOR CORED SLAB SECTIONS SHALL BE FILLED WITH NON-SHRINK GROUT PRIOR TO PLACEMENT OF THE WEARING SURFACE.

PROJECT NO. B-5629
BRUNSWICK COUNTY
STATION: 14+21.00 -L-

SHEET 2 OF 4

NORTH CAROLINA PROFESSIONAL SEAL 29112 ENGINEER RICHARD L. COFFMAN

DocuSigned by: Richard Coffman 2/1/2023
7D4CF8F036E7414...

DOCUMENT NOT CONSIDERED FINAL UNLESS ALL SIGNATURES COMPLETED

STATE OF NORTH CAROLINA
DEPARTMENT OF TRANSPORTATION
RALEIGH

3'-0" X 2'-0"
PRESTRESSED CONCRETE
CORED SLAB UNIT
90° SKEW
(SPAN A)

LJB INC. (NC LICENSE C-4123)
1401 AVERSBORO ROAD
GARNER, NC 27529
(919) 594-6710 · LJB.COM
We think bigger.

REVISIONS								SHEET NO.
NO.	BY:	DATE:	NO.	BY:	DATE:			SI-8
1			3					TOTAL SHEETS
2			4					23

DRAWN BY :	MJM	DATE :	5/2/2022
CHECKED BY :	RLC	DATE :	5/9/2022
ENGINEER OF RECORD :	R. COFFMAN	DATE :	2/2022

401_017_B5629_SMU_CS2_008.dgn
9:11:58 AM
1/24/2023

DocuSign Envelope ID: 16D1E2ED-3E13-4DD9-A1F6-2AE2BB99551D

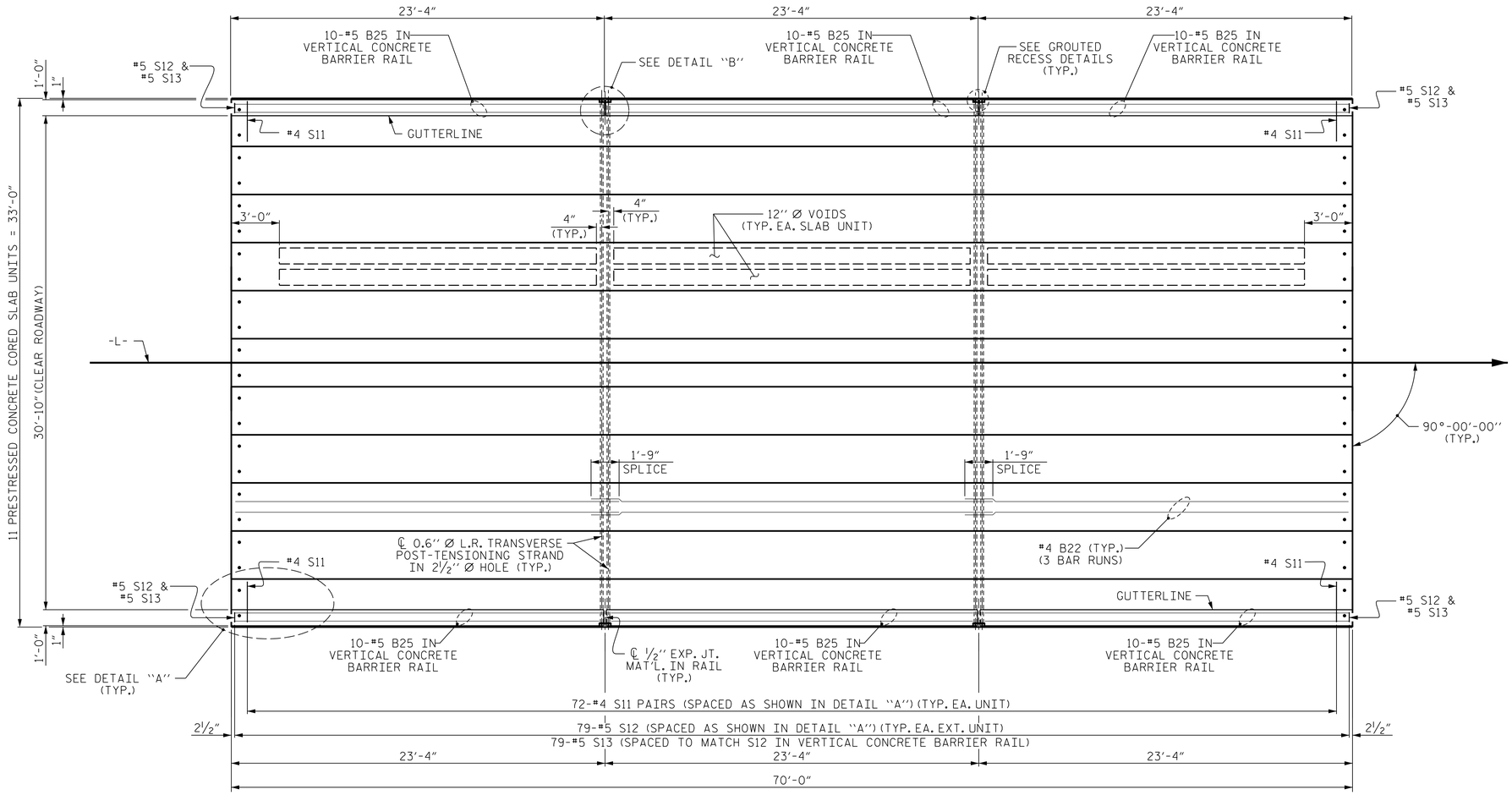

PLAN OF UNIT

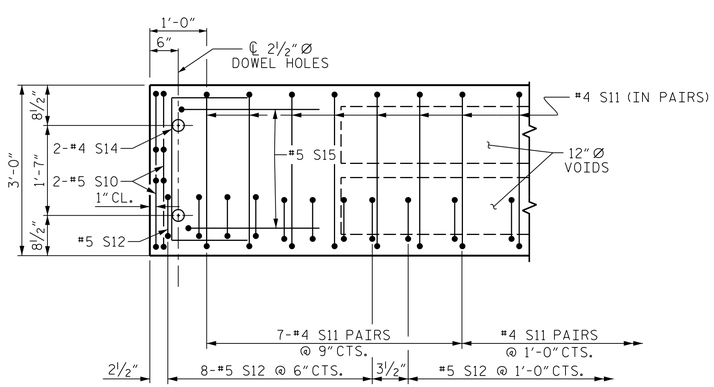

DETAIL "A"

(TYPICAL EACH END OF UNIT)
NOTE: EXTERIOR UNIT SHOWN - INTERIOR UNIT SIMILAR EXCEPT OMIT #5 S12 BARS.

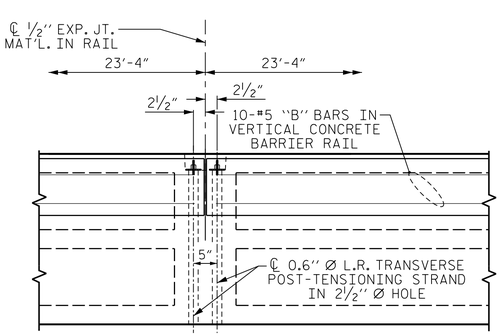

DETAIL "B"

#4 S11 BARS MAY BE SHIFTED AS NECESSARY TO MAINTAIN 1" CLEAR TO GROUTED RECESS AND 2½" Ø TRANSVERSE POST-TENSIONING STRAND HOLES

PROJECT NO. B-5629
BRUNSWICK COUNTY
STATION: 14+21.00 -L-

SHEET 3 OF 4

STATE OF NORTH CAROLINA
DEPARTMENT OF TRANSPORTATION
RALEIGH

PLAN OF 70' UNIT
30'-10" CLEAR ROADWAY
90° SKEW
(SPAN A)

NORTH CAROLINA PROFESSIONAL SEAL 29112 ENGINEER RICHARD L. COFFMAN

DocuSigned by: Richard Coffman 2/1/2023
724CF8F03BE7414...

DOCUMENT NOT CONSIDERED FINAL UNLESS ALL SIGNATURES COMPLETED

LJB INC. (NC LICENSE C-4123)
1401 AVERSBORO ROAD
GARNER, NC 27529
(919) 594-6710 · LJB.COM
We think bigger.

REVISIONS						
NO.	BY:	DATE:	NO.	BY:	DATE:	
1			3			
2			4			

SHEET NO. SI-9
TOTAL SHEETS 23

DRAWN BY :	MJM	DATE :	5/2/2022
CHECKED BY :	RLC	DATE :	5/9/2022
ENGINEER OF RECORD :	R. COFFMAN	DATE :	2/2022

401.019_B5629_SMU_CS3_009.dgn
1/24/2023 9:12:00 AM

DocuSign Envelope ID: 16D1E2ED-3E13-4DD9-A1F6-2AE2BB99551D

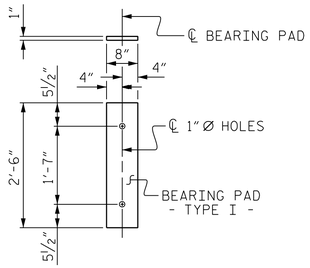

FIXED END
(TYPE I - 22 REQ'D)

ELASTOMERIC BEARING DETAILS

ELASTOMER IN ALL BEARINGS SHALL BE 60 DUROMETER HARDNESS.

BILL OF MATERIAL FOR VERTICAL CONCRETE BARRIER RAIL

BAR	BARS PER PAIR OF EXTERIOR UNITS	TOTAL NO.	SIZE	TYPE	LENGTH	WEIGHT
	70' UNIT					
✱B25	60	60	#5	STR	22'-11"	1434
✱S13	158	158	#5	2	7'-2"	1181
✱ EPOXY COATED REINFORCING STEEL				LBS.		2615
CLASS AA CONCRETE				CU.YDS.		18.1
TOTAL VERTICAL CONCRETE BARRIER RAIL				LN. FT.		140.25

BILL OF MATERIAL FOR ONE 70' CORED SLAB UNIT

				EXTERIOR UNIT		INTERIOR UNIT	
BAR	NUMBER	SIZE	TYPE	LENGTH	WEIGHT	LENGTH	WEIGHT
B22	6	#4	STR	24'-6"	98	24'-6"	98
S10	8	#5	3	4'-9"	40	4'-9"	40
S11	144	#4	3	5'-10"	561	5'-10"	561
✱S12	79	#5	1	5'-7"	460		
S14	4	#4	3	5'-7"	15	5'-7"	15
S15	4	#5	3	7'-1"	30	7'-1"	30
REINFORCING STEEL			LBS.		744		744
✱ EPOXY COATED REINFORCING STEEL			LBS.		460		
7000 P.S.I. CONCRETE			CU. YDS.		11.8		11.8
0.6"Ø L.R. STRANDS			No.		28		28

BAR TYPES

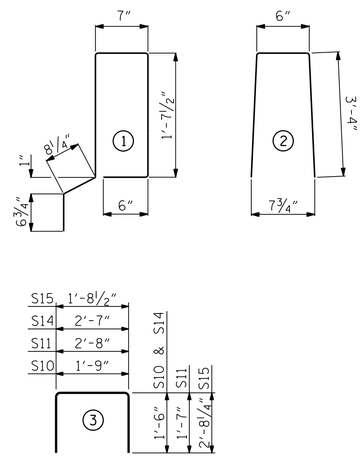

ALL BAR DIMENSIONS ARE OUT TO OUT

NOTES

ALL PRESTRESSING STRANDS SHALL BE 7-WIRE LOW RELAXATION GRADE 270 STRANDS AND SHALL CONFORM TO AASHTO M203 EXCEPT FOR SAMPLING REQUIREMENTS WHICH SHALL BE IN ACCORDANCE WITH THE STANDARD SPECIFICATIONS.

ALL REINFORCING STEEL CAST WITH THE CORED SLAB SECTIONS SHALL BE GRADE 60 AND SHALL BE INCLUDED IN THE UNIT PRICE BID FOR PRESTRESSED CONCRETE CORED SLABS.

RECESSES FOR TRANSVERSE STRANDS SHALL BE GROUTED AFTER THE TENSIONING OF THE STRANDS.

THE 2½"Ø DOWEL HOLES AT FIXED ENDS OF SLAB SECTIONS SHALL BE FILLED WITH NON-SHRINK GROUT.

THE BACKER RODS SHALL CONFORM TO THE REQUIREMENTS OF TYPE M BOND BREAKER. SEE SECTION 1028 OF THE STANDARD SPECIFICATIONS.

WHEN CORED SLABS ARE CAST, AN INTERNAL HOLD-DOWN SYSTEM SHALL BE EMPLOYED TO PREVENT VOIDS FROM RISING OR MOVING SIDEWAYS. AT LEAST SIX WEEKS PRIOR TO CASTING CORED SLABS, THE CONTRACTOR SHALL SUBMIT TO THE ENGINEER FOR REVIEW AND COMMENT, DETAILED DRAWINGS OF THE PROPOSED HOLD-DOWN SYSTEM. IN ADDITION TO STRUCTURAL DETAILS, LOCATION AND SPACING OF THE HOLD-DOWNS SHALL BE INDICATED.

THE TRANSFER OF LOAD FROM THE ANCHORAGES TO THE CORED SLAB UNIT SHALL BE DONE WHEN THE CONCRETE HAS REACHED A COMPRESSIVE STRENGTH OF NOT LESS THAN THE REQUIRED STRENGTH SHOWN IN THE "CONCRETE RELEASE STRENGTH" TABLE.

ALL REINFORCING STEEL IN VERTICAL CONCRETE BARRIER RAILS SHALL BE EPOXY COATED.

PRESTRESSING STRANDS SHALL BE CUT FLUSH WITH THE CORED SLAB UNIT ENDS.

APPLY EPOXY PROTECTIVE COATING TO CORED SLAB UNIT ENDS.

GROOVED CONTRACTION JOINTS, "IN DEPTH, SHALL BE TOOLED IN ALL EXPOSED FACES OF THE BARRIER RAIL AND IN ACCORDANCE WITH ARTICLE 825-10(B) OF THE STANDARD SPECIFICATIONS. A CONTRACTION JOINT SHALL BE LOCATED AT EACH THIRD POINT BETWEEN BARRIER RAIL EXPANSION JOINTS. ONLY ONE CONTRACTION JOINT IS REQUIRED AT MIDPOINT OF BARRIER RAIL SEGMENTS LESS THAN 20 FEET IN LENGTH AND NO CONTRACTION JOINTS ARE REQUIRED FOR THOSE SEGMENTS LESS THAN 10 FEET IN LENGTH.

FLAME CUTTING OF THE TRANSVERSE POST-TENSIONING STRAND IS NOT ALLOWED.

MAINTAIN A SYMMETRIC TENSION FORCE BETWEEN EACH PAIR OF TRANSVERSE POST TENSIONING STRANDS IN THE DIAPHRAGM.

THE #4 S11 STIRRUPS MAY BE SHIFTED AS NECESSARY TO MAINTAIN 1"CLEAR TO THE GROUTED RECESS.

FOR GROUT FOR STRUCTURES, SEE SPECIAL PROVISIONS.

THE PERMITTED THREADED INSERTS ARE DETAILED AS AN OPTION FOR THE CONTRACTOR TO ATTACH FALSEWORK AND FORMWORK DURING CONSTRUCTION.

THE PERMITTED THREADED INSERTS IN THE EXTERIOR UNITS SHALL BE SIZED BY THE CONTRACTOR, SPACED AT 4'-0"CENTERS AND GALVANIZED IN ACCORDANCE WITH SECTION 1076 OF THE STANDARD SPECIFICATIONS. STAINLESS STEEL THREADED INSERTS MAY BE USED AS AN ALTERNATE.

THE PERMITTED THREADED INSERTS SHALL BE GROUTED BY THE CONTRACTOR IMMEDIATELY FOLLOWING REMOVAL OF THE FALSEWORK.

THE COST OF THE PERMITTED THREADED INSERTS SHALL BE INCLUDED IN THE PRICE BID FOR THE PRECAST UNITS.

PRESTRESSED CONCRETE CORED SLAB UNITS ARE DESIGNED FOR 0 PSI TENSION IN THE PRECOMPRESSED TENSILE ZONE UNDER ALL LOADING CONDITIONS.

PRESTRESSED CONCRETE CORE SLAB UNITS SHALL CONTAIN CALCIUM NITRATE CORROSION INHIBITOR.

POST-TENSIONING SHALL BE DONE IN ACCORDANCE WITH THE STANDARD SPECIFICATIONS.

GRADE 270 STRANDS

	0.6"Ø L.R.
AREA (SQUARE INCHES)	0.217
ULTIMATE STRENGTH (LBS. PER STRAND)	58,600
APPLIED PRESTRESS (LBS. PER STRAND)	43,950

CONCRETE RELEASE STRENGTH

UNIT	PSI
70' UNITS	5500

CORED SLABS REQUIRED

	NUMBER	LENGTH	TOTAL LENGTH
70' UNIT			
EXTERIOR C.S.	2	70'-0"	140'-0"
INTERIOR C.S.	9	70'-0"	630'-0"
TOTAL	11	70'-0"	770'-0"

DEAD LOAD DEFLECTION AND CAMBER

	3'-0" x 2'-0"
70' CORED SLAB UNIT	0.6"Ø L.R. STRAND
CAMBER (SLAB ALONE IN PLACE)	2¼" ↑
DEFLECTION DUE TO SUPERIMPOSED DEAD LOAD✱✱	¾" ↓
FINAL CAMBER	1½" ↑

✱✱ INCLUDES FUTURE WEARING SURFACE

GUTTERLINE ASPHALT THICKNESS & RAIL HEIGHT

	ASPHALT OVERLAY THICKNESS @ MID-SPAN	RAIL HEIGHT @ MID-SPAN
70' UNITS	2"	3'-8"

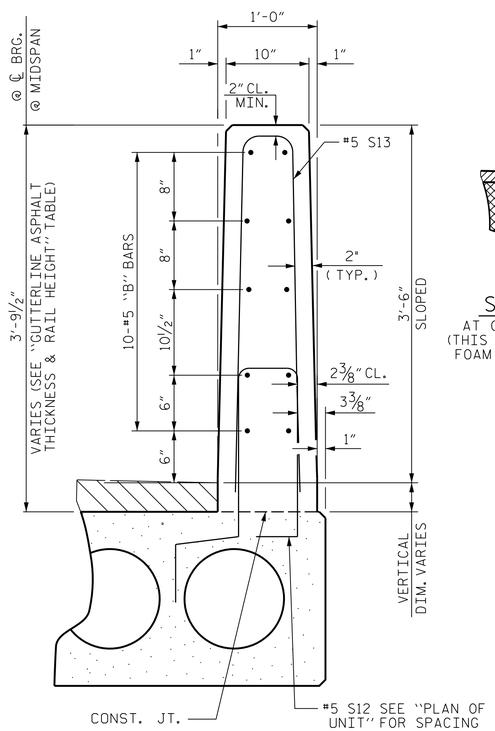

SECTION THRU RAIL

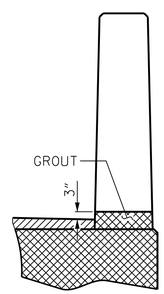

SECTION T-T
AT OPEN JOINT AT BENT
(THIS IS TO BE USED WHERE FOAM JOINT IS NOT USED)

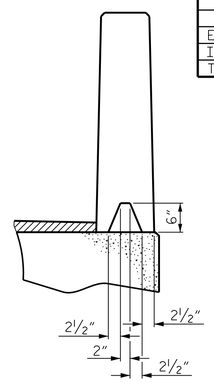

SECTION S-S
AT DAM IN OPEN JOINT
(THIS IS TO BE USED ONLY WHEN SLIP FORM IS USED)

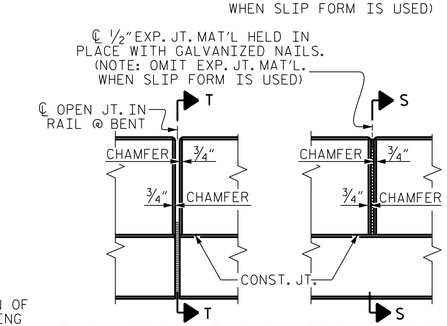

ELEVATION AT EXPANSION JOINTS

VERTICAL CONCRETE BARRIER RAIL DETAILS

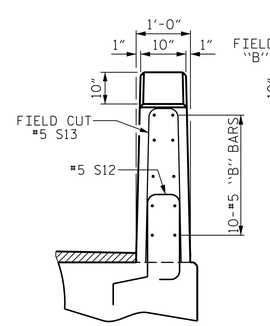

END VIEW

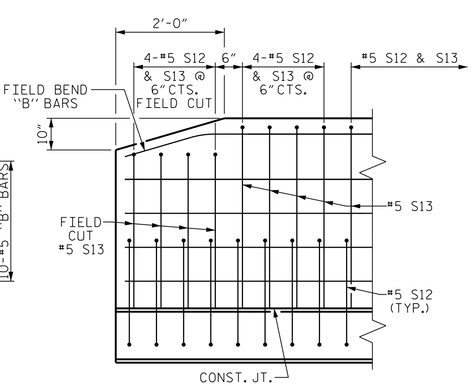

SIDE VIEW

END OF RAIL DETAILS

PROJECT NO. B-5629
BRUNSWICK COUNTY
STATION: 14+21.00 -L-

SHEET 4 OF 4

STATE OF NORTH CAROLINA
DEPARTMENT OF TRANSPORTATION
RALEIGH

3'-0" X 2'-0" PRESTRESSED CONCRETE CORED SLAB UNIT 90° SKEW (SPAN A)

NORTH CAROLINA PROFESSIONAL SEAL 29112 ENGINEER RICHARD L. COFFMAN

DocuSigned by: Richard Coffman 2/1/2023

DOCUMENT NOT CONSIDERED FINAL UNLESS ALL SIGNATURES COMPLETED

LJB INC. (NC LICENSE C-4123)
1401 AVERSBORO ROAD
GARNER, NC 27529
(919) 594-6710 · LJB.COM
We think bigger.

REVISIONS						SHEET NO.
NO.	BY:	DATE:	NO.	BY:	DATE:	SI-10
1			3			TOTAL SHEETS
2			4			23

DRAWN BY : MJM DATE : 5/2/2022
CHECKED BY : RLC DATE : 5/9/2022
ENGINEER OF RECORD : R. COFFMAN DATE : 2/2022

401.021.B5629.SMU.CS4.010.dgn 1/24/2023 9:12:02 AM

DocuSign Envelope ID: 16D1E2ED-3E13-4DD9-A1F6-2AE2BB99551D

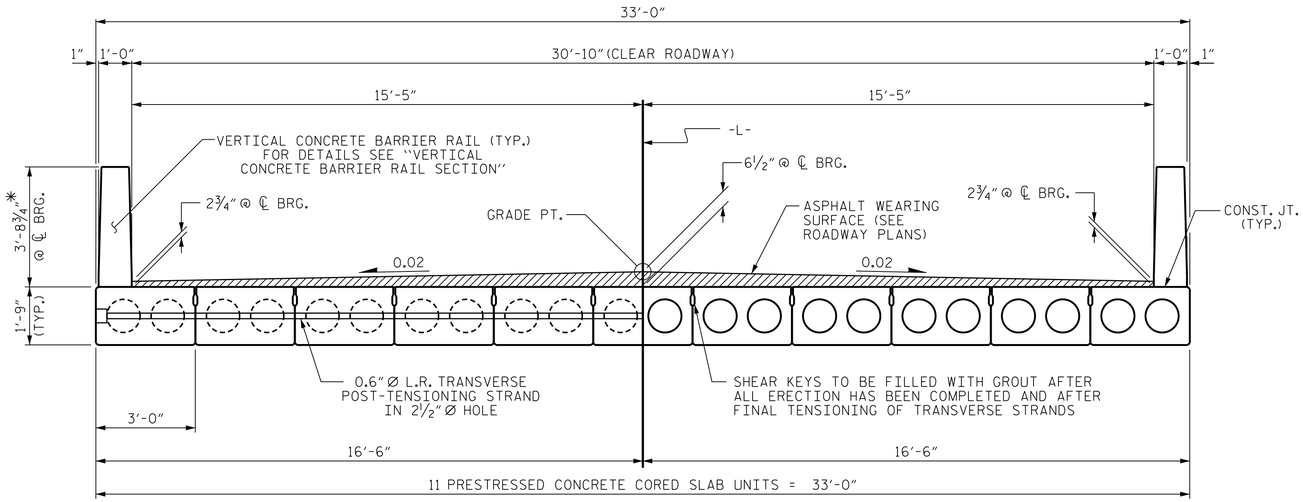

HALF SECTION
AT INTERMEDIATE DIAPHRAGMS

HALF SECTION
THROUGH VOIDS

TYPICAL SECTION

* - THE MAXIMUM BARRIER RAIL HEIGHT AND ASPHALT THICKNESS IS SHOWN. THE HEIGHT OF THE BARRIER RAIL AND ASPHALT THICKNESS VARIES WHILE THE TOP OF THE BARRIER RAIL FOLLOWS THE PROFILE OF THE GUTTERLINE. FOR RAIL HEIGHT DETAILS AND ASPHALT THICKNESS SEE THE "VERTICAL CONCRETE BARRIER RAIL SECTION" DETAIL.

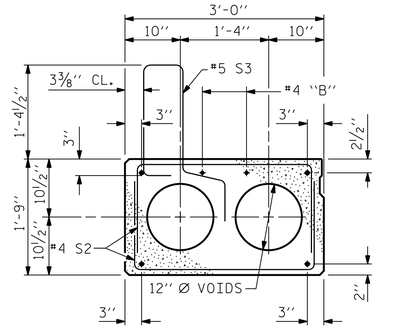

EXT. SLAB SECTION

(FOR PRESTRESSED STRAND LAYOUT, SEE INTERIOR SLAB SECTION.)

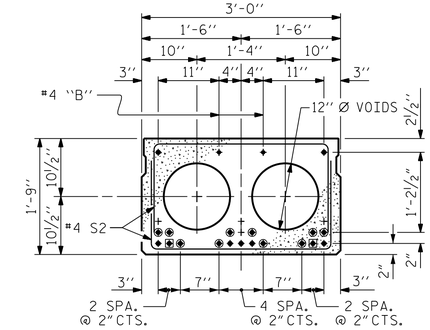

INTERIOR SLAB SECTION (30' UNIT)

(9 STRANDS REQUIRED)

0.6" Ø LOW RELAXATION STRAND LAYOUT

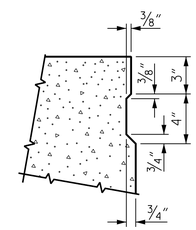

SHEAR KEY DETAIL

NOTE: OMIT SHEAR KEY ON OUTSIDE FACE OF EXTERIOR CORED SLABS.

◉ BOND SHALL BE BROKEN ON THESE STRANDS FOR A DISTANCE OF 2'-0" FROM END OF CORED SLAB UNIT. SEE STANDARD SPECIFICATIONS, ARTICLE 1078-7.

◉ OPTIONAL FULL LENGTH DEBONDED STRANDS. THESE STRANDS ARE NOT REQUIRED. IF THE FABRICATOR CHOOSES TO INCLUDE THESE STRANDS IN THE CORED SLAB UNIT, THE STRANDS SHALL BE DEBONDED FOR THE FULL LENGTH OF THE UNIT AT NO ADDITIONAL COST. SEE STANDARD SPECIFICATIONS, ARTICLE 1078-7.

DEBONDING LEGEND

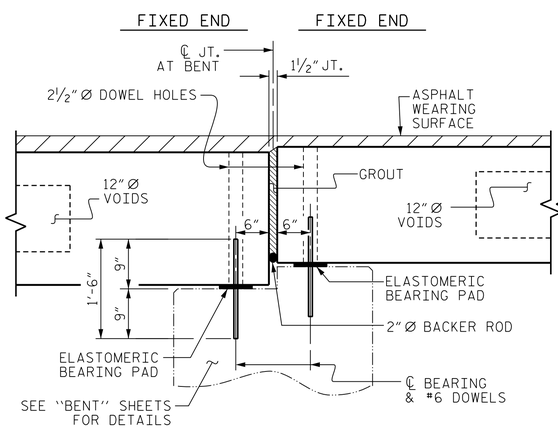

SECTION AT BENT No. 1

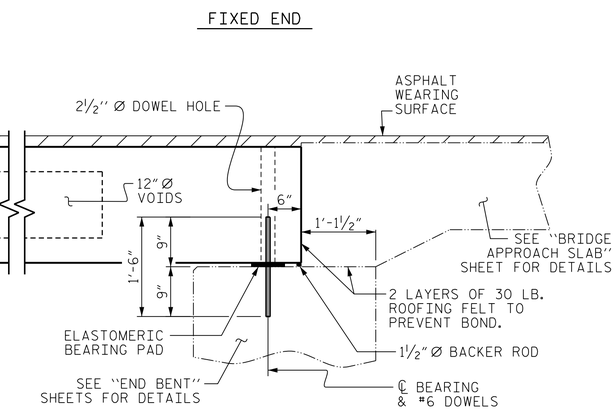

SECTION AT END BENT No. 2

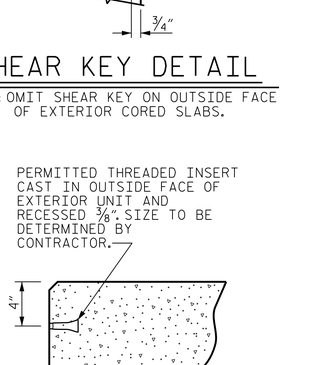

THREADED INSERT DETAIL

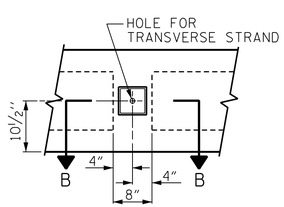

ELEVATION VIEW

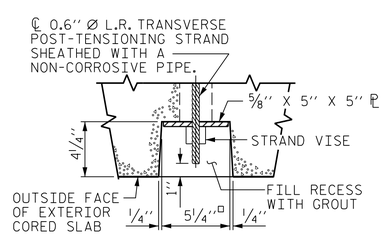

SECTION B-B

GROUTED RECESS AT END OF POST-TENSIONED STRAND OF CORED SLABS

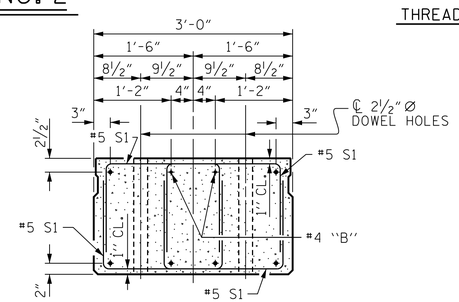

END ELEVATION

SHOWING PLACEMENT OF DOUBLE STIRRUPS AND LOCATION OF DOWEL HOLES. (STRAND LAYOUT NOT SHOWN.) INTERIOR SLAB UNIT SHOWN-EXTERIOR SLAB UNIT SIMILAR EXCEPT SHEAR KEY LOCATION.

PROJECT NO. B-5629
BRUNSWICK COUNTY
STATION: 14+21.00 -L-

SHEET 1 OF 4

STATE OF NORTH CAROLINA
DEPARTMENT OF TRANSPORTATION
RALEIGH

3'-0" X 1'-9" PRESTRESSED CONCRETE CORED SLAB UNIT 90° SKEW (SPAN B)

NORTH CAROLINA PROFESSIONAL SEAL 29112 ENGINEER RICHARD L. COFFMAN

DocuSigned by: Richard Coffman 7D4CF9F036E7414... 2/1/2023

DOCUMENT NOT CONSIDERED FINAL UNLESS ALL SIGNATURES COMPLETED

LJB INC. (NC LICENSE C-4123)
1401 AVERSBORO ROAD
GARNER, NC 27529
(919) 594-6710 · LJB.COM
We think bigger.

REVISIONS								SHEET NO.
NO.	BY:	DATE:	NO.	BY:	DATE:			SI-11
1			3					TOTAL SHEETS
2			4					23

DRAWN BY : MJM DATE : 5/4/2022
CHECKED BY : RLC DATE : 5/9/2022
ENGINEER OF RECORD : R. COFFMAN DATE : 2/2022

401_023_B5629_SMU_CS5_011.dgn
9:12:05 AM
1/24/2023

DocuSign Envelope ID: 16D1E2ED-3E13-4DD9-A1F6-2AE2BB99551D

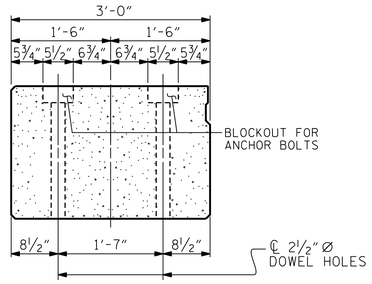

END ELEVATION

SHOWING LOCATION OF BLOCKOUT FOR ANCHOR BOLTS AND DOWEL HOLES.

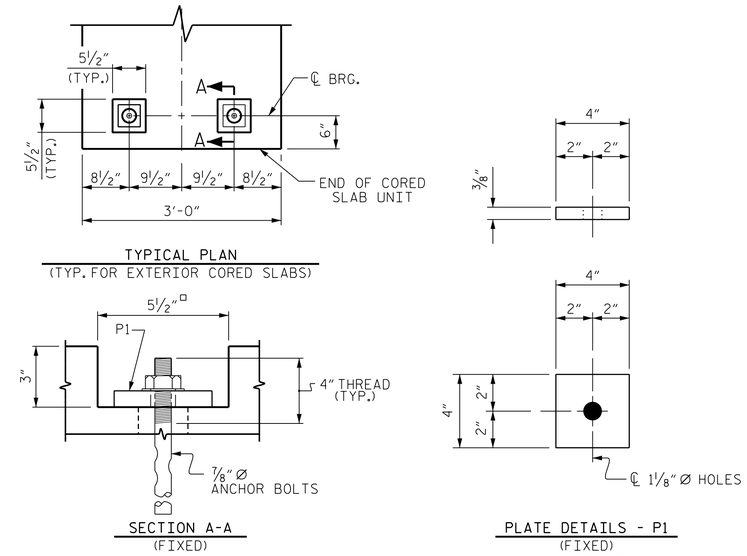

TYPICAL PLAN
(TYP. FOR EXTERIOR CORED SLABS)

SECTION A-A
(FIXED)

PLATE DETAILS - P1
(FIXED)
P1 (8 REQ'D.)

BLOCKOUT DETAIL FOR ANCHOR BOLTS

(TYPICAL FOR EXTERIOR CORED SLABS)

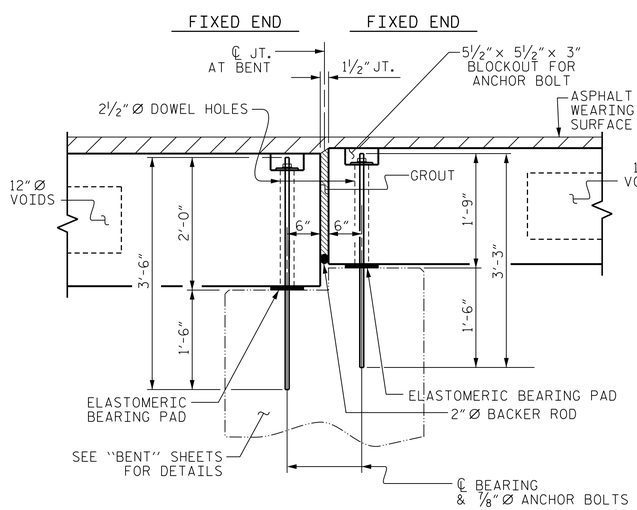

SECTION AT BENT No. 1

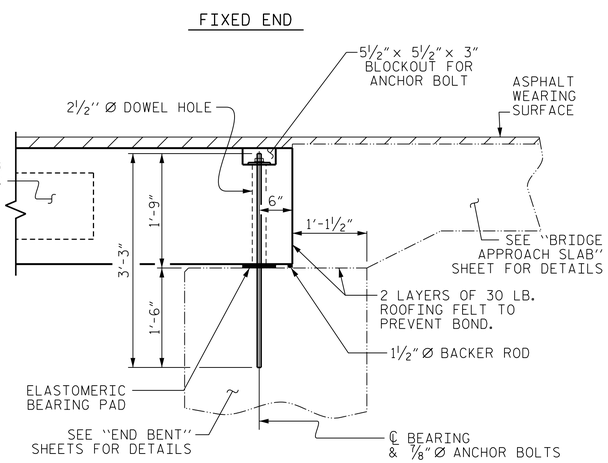

SECTION AT END BENT No. 2

NOTES

AT ALL FIXED AND EXPANSION ENDS OF EXTERIOR CORED SLAB SECTIONS WITH HOLD-DOWN ANCHOR BOLTS, NUTS FOR ANCHOR BOLTS SHALL BE FINGER-TIGHTENED AND THEN BACKED OFF ½ TURN. THE THREAD OF THE NUT AND BOLT SHALL THEN BE BURRED WITH A SHARP POINTED TOOL.

THE 2½" Ø DOWEL HOLES AT FIXED ENDS OF EXTERIOR CORED SLAB SECTIONS WITH HOLD-DOWN ANCHOR BOLTS SHALL BE FILLED WITH NON-SHRINK GROUT TO THE BOTTOM OF THE ANCHOR BOLT BLOCKOUT PRIOR TO INSTALLING THE ANCHOR PLATES, WASHERS, AND NUTS. THE 2½" Ø DOWEL HOLES AT EXPANSION ENDS OF EXTERIOR CORED SLAB SECTIONS WITH HOLD-DOWN ANCHOR BOLTS SHALL BE FILLED WITH JOINT SEALER MATERIAL TO THE BOTTOM OF THE ANCHOR BOLT BLOCKOUT PRIOR TO INSTALLING THE ANCHOR PLATES, WASHERS, AND NUTS.

THE ANCHOR BOLT BLOCKOUTS IN EXTERIOR CORED SLAB SECTIONS SHALL BE FILLED WITH NON-SHRINK GROUT PRIOR TO PLACEMENT OF THE WEARING SURFACE.

PROJECT NO. B-5629
BRUNSWICK COUNTY
STATION: 14+21.00 -L-

SHEET 2 OF 4

NORTH CAROLINA PROFESSIONAL SEAL 29112 ENGINEER RICHARD L. COFFMAN

DocuSigned by: Richard Coffman 2/1/2023
7D4CF9F03DE7414...

DOCUMENT NOT CONSIDERED FINAL UNLESS ALL SIGNATURES COMPLETED

STATE OF NORTH CAROLINA
DEPARTMENT OF TRANSPORTATION
RALEIGH

3'-0" X 2'-0"
PRESTRESSED CONCRETE
CORED SLAB UNIT
90° SKEW
(SPAN B)

REVISIONS							SHEET NO.
NO.	BY:	DATE:	NO.	BY:	DATE:		SI-12
1			3				TOTAL SHEETS
2			4				23

LJB INC. (NC LICENSE C-4123)
1401 AVERSBORO ROAD
GARNER, NC 27529
(919) 594-6710 · LJB.COM
We think bigger.

DRAWN BY : MJM DATE : 5/4/2022
CHECKED BY : RLC DATE : 5/9/2022
ENGINEER OF RECORD : R. COFFMAN DATE : 2/2022

401.025_B5629_SMU_CS6.012.dgn
9:12:07 AM
1/24/2023

DocuSign Envelope ID: 16D1E2ED-3E13-4DD9-A1F6-2AE2BB99551D

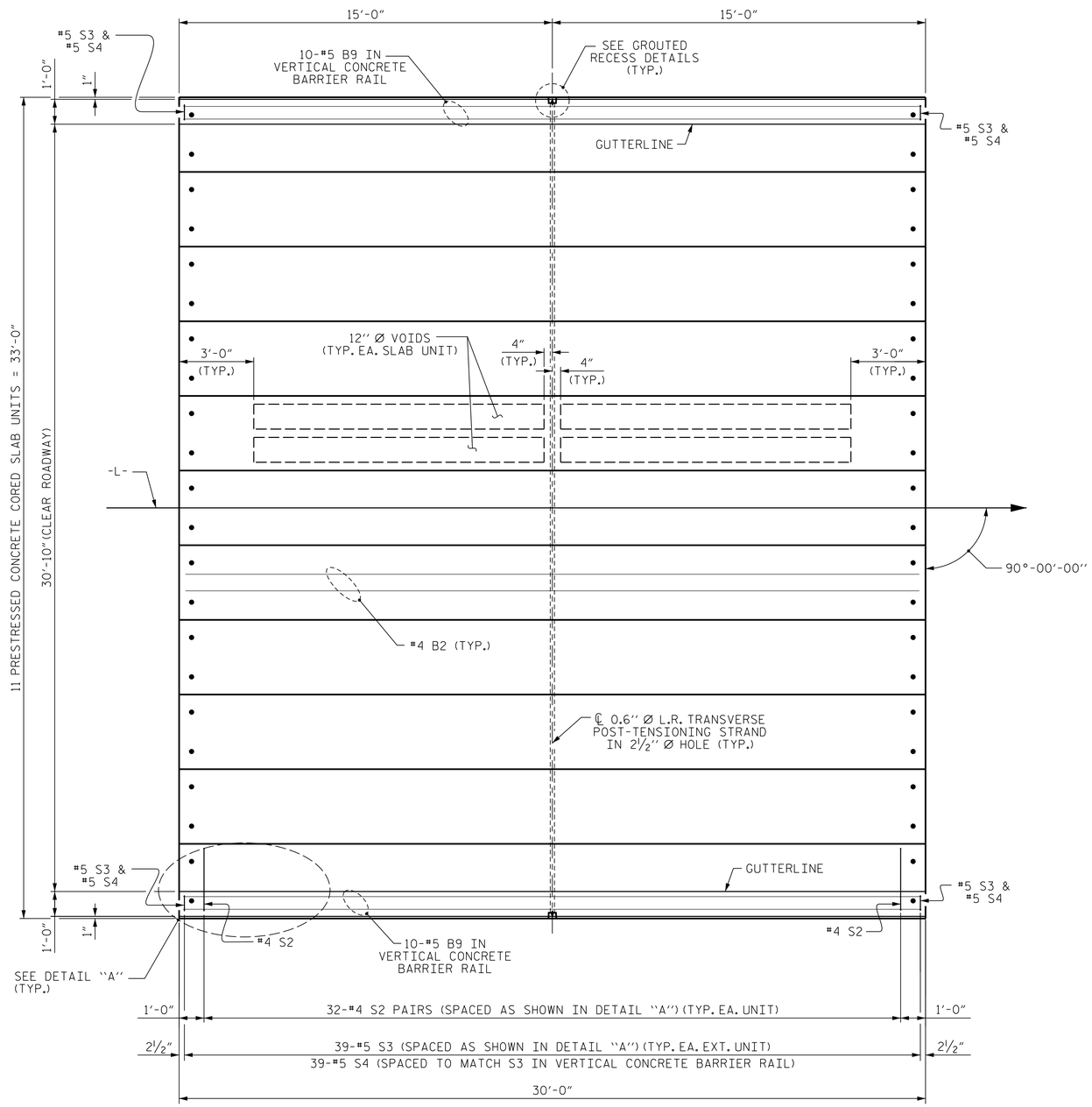

PLAN OF UNIT

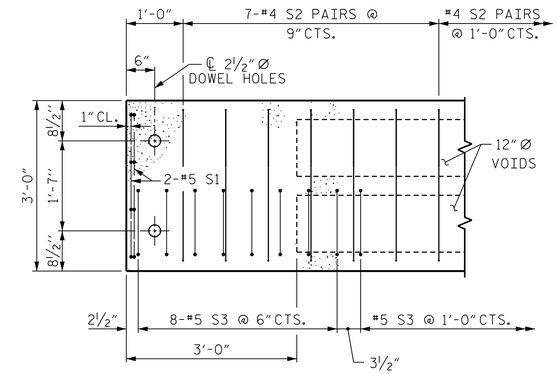

DETAIL "A"

(TYPICAL EACH END OF UNIT)
NOTE: EXTERIOR UNIT SHOWN - INTERIOR UNIT SIMILAR EXCEPT OMIT #5 S3 BARS.

PROJECT NO. B-5629
BRUNSWICK COUNTY
STATION: 14+21.00 -L-

SHEET 3 OF 4

STATE OF NORTH CAROLINA
DEPARTMENT OF TRANSPORTATION
RALEIGH

PLAN OF 30' UNIT
30'-10" CLEAR ROADWAY
90° SKEW
(SPAN B)

NORTH CAROLINA PROFESSIONAL SEAL 29112 ENGINEER RICHARD L. COFFMAN

DocuSigned by: Richard Coffman 2/1/2023
7D4CF9F036E7414...

DOCUMENT NOT CONSIDERED FINAL UNLESS ALL SIGNATURES COMPLETED

LJB INC. (NC LICENSE C-4123)
1401 AVERSBORO ROAD
GARNER, NC 27529
(919) 594-6710 · LJB.COM
We think bigger.

REVISIONS						
NO.	BY:	DATE:	NO.	BY:	DATE:	
1			3			
2			4			

SHEET NO. SI-13
TOTAL SHEETS 23

DRAWN BY :	MJM	DATE :	5/4/2022
CHECKED BY :	RLC	DATE :	5/9/2022
ENGINEER OF RECORD :	R. COFFMAN	DATE :	2/2022

401_027_B5629_SMU_CS7_013.dgn
9:12:09 AM
1/24/2023

DocuSign Envelope ID: 16D1E2ED-3E13-4DD9-A1F6-2AE2BB99551D

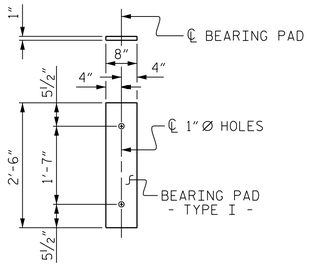

FIXED END
(TYPE I - 22 REQ'D)

ELASTOMERIC BEARING DETAILS

ELASTOMER IN ALL BEARINGS SHALL BE 50 DUROMETER HARDNESS.

BILL OF MATERIAL FOR VERTICAL CONCRETE BARRIER RAIL

BAR	BARS PER PAIR OF EXTERIOR UNITS	TOTAL NO.	SIZE	TYPE	LENGTH	WEIGHT
	30' UNIT					
✳ B9	20	20	#5	STR	29'-7"	617
✳ S4	78	78	#5	2	7'-2"	583
✳ EPOXY COATED REINFORCING STEEL				LBS.		1200
CLASS AA CONCRETE				CU.YDS.		7.7
TOTAL VERTICAL CONCRETE BARRIER RAIL				LN. FT.		60.25

BILL OF MATERIAL FOR ONE 30' CORED SLAB UNIT

				EXTERIOR UNIT		INTERIOR UNIT	
BAR	NUMBER	SIZE	TYPE	LENGTH	WEIGHT	LENGTH	WEIGHT
B2	2	#4	STR	29'-8"	40	29'-8"	40
S1	8	#5	3	4'-3"	35	4'-3"	35
S2	64	#4	3	5'-4"	228	5'-4"	228
✳ S3	39	#5	1	5'-7"	227		
REINFORCING STEEL			LBS.		303		303
✳ EPOXY COATED REINFORCING STEEL			LBS.		227		
5000 P.S.I. CONCRETE			CU. YDS.		4.4		4.4
0.6"Ø L.R. STRANDS			No.		9		9

BAR TYPES

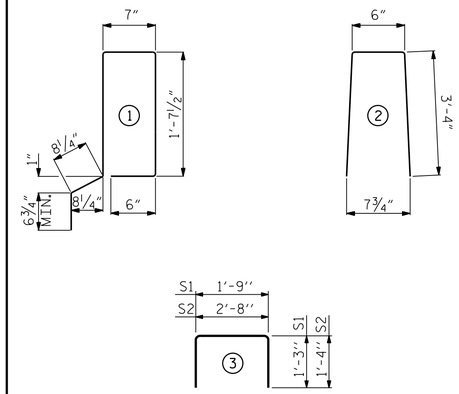

ALL BAR DIMENSIONS ARE OUT TO OUT

NOTES

ALL PRESTRESSING STRANDS SHALL BE 7-WIRE LOW RELAXATION GRADE 270 STRANDS AND SHALL CONFORM TO AASHTO M203 EXCEPT FOR SAMPLING REQUIREMENTS WHICH SHALL BE IN ACCORDANCE WITH THE STANDARD SPECIFICATIONS.

ALL REINFORCING STEEL CAST WITH THE CORED SLAB SECTIONS SHALL BE GRADE 60 AND SHALL BE INCLUDED IN THE UNIT PRICE BID FOR PRESTRESSED CONCRETE CORED SLABS.

RECESSES FOR TRANSVERSE STRANDS SHALL BE GROUTED AFTER THE TENSIONING OF THE STRANDS.

THE 2½"Ø DOWEL HOLES AT FIXED ENDS OF SLAB SECTIONS SHALL BE FILLED WITH NON-SHRINK GROUT.

THE BACKER RODS SHALL CONFORM TO THE REQUIREMENTS OF TYPE M BOND BREAKER. SEE SECTION 1028 OF THE STANDARD SPECIFICATIONS.

WHEN CORED SLABS ARE CAST, AN INTERNAL HOLD-DOWN SYSTEM SHALL BE EMPLOYED TO PREVENT VOIDS FROM RISING OR MOVING SIDEWAYS. AT LEAST SIX WEEKS PRIOR TO CASTING CORED SLABS, THE CONTRACTOR SHALL SUBMIT TO THE ENGINEER FOR REVIEW AND COMMENT, DETAILED DRAWINGS OF THE PROPOSED HOLD-DOWN SYSTEM. IN ADDITION TO STRUCTURAL DETAILS, LOCATION AND SPACING OF THE HOLD-DOWNS SHALL BE INDICATED.

ALL REINFORCING STEEL IN THE VERTICAL CONCRETE BARRIER RAIL SHALL BE EPOXY COATED.

PRESTRESSING STRANDS SHALL BE CUT FLUSH WITH THE CORED SLAB UNIT ENDS.

APPLY EPOXY PROTECTIVE COATING TO CORED SLAB UNIT ENDS.

GROOVED CONTRACTION JOINTS, ½" IN DEPTH, SHALL BE TOOLED IN ALL EXPOSED FACES OF THE BARRIER RAIL AND IN ACCORDANCE WITH ARTICLE 825-10(B) OF THE STANDARD SPECIFICATIONS. A CONTRACTION JOINT SHALL BE LOCATED AT EACH THIRD POINT BETWEEN BARRIER RAIL EXPANSION JOINTS. ONLY ONE CONTRACTION JOINT IS REQUIRED AT MIDPOINT OF BARRIER RAIL SEGMENTS LESS THAN 20 FEET IN LENGTH AND NO CONTRACTION JOINTS ARE REQUIRED FOR THOSE SEGMENTS LESS THAN 10 FEET IN LENGTH.

FLAME CUTTING OF THE TRANSVERSE POST-TENSIONING STRAND IS NOT ALLOWED.

THE TRANSFER OF LOAD FROM THE ANCHORAGES TO THE CORED SLAB UNIT SHALL BE DONE WHEN THE CONCRETE HAS REACHED A COMPRESSIVE STRENGTH OF NOT LESS THAN THE REQUIRED STRENGTH SHOWN IN THE "CONCRETE RELEASE STRENGTH" TABLE.

FOR GROUT FOR STRUCTURES, SEE SPECIAL PROVISIONS.

THE PERMITTED THREADED INSERTS ARE DETAILED AS AN OPTION FOR THE CONTRACTOR TO ATTACH FALSEWORK AND FORMWORK DURING CONSTRUCTION.

THE PERMITTED THREADED INSERTS IN THE EXTERIOR UNITS SHALL BE SIZED BY THE CONTRACTOR, SPACED AT 4'-0" CENTERS AND GALVANIZED IN ACCORDANCE WITH SECTION 1076 OF THE STANDARD SPECIFICATIONS. STAINLESS STEEL THREADED INSERTS MAY BE USED AS AN ALTERNATE.

THE PERMITTED THREADED INSERTS SHALL BE GROUTED BY THE CONTRACTOR IMMEDIATELY FOLLOWING REMOVAL OF THE FALSEWORK.

THE COST OF THE PERMITTED THREADED INSERTS SHALL BE INCLUDED IN THE PRICE BID FOR THE PRECAST UNITS.

PRESTRESSED CONCRETE GIRDERS ARE DESIGNED FOR 0 PSI IN THE PRECOMPRESS ZONE UNDER ALL LOADING CONDITIONS.

PRESTRESSED CONCRETE CORE SLAB UNITS SHALL CONTAIN CALCIUM NITRATE CORROSION INHIBITOR.

GRADE 270 STRANDS

	0.6"Ø L.R.
AREA (SQUARE INCHES)	0.217
ULTIMATE STRENGTH (LBS. PER STRAND)	58,600
APPLIED PRESTRESS (LBS. PER STRAND)	43,950

CONCRETE RELEASE STRENGTH

UNIT	PSI
25', 30' & 35' UNITS	4000

GUTTERLINE ASPHALT THICKNESS & RAIL HEIGHT

	ASPHALT OVERLAY THICKNESS @ MID-SPAN	RAIL HEIGHT @ MID-SPAN
25', 30' & 35' UNITS	2⅝"	3'-8⅝"

DEAD LOAD DEFLECTION AND CAMBER

	3'-0" x 1'-9" 0.6"Ø L.R. STRAND
25', 30' & 35' CORED SLAB UNIT	
CAMBER (SLAB ALONE IN PLACE)	¼" ↑
DEFLECTION DUE TO SUPERIMPOSED DEAD LOAD✳✳	⅛" ↓
FINAL CAMBER	⅛" ↑

✳✳ INCLUDES FUTURE WEARING SURFACE

CORED SLABS REQUIRED

	NUMBER	LENGTH	TOTAL LENGTH
30' UNIT			
EXTERIOR C.S.	2	30'-0"	60'-0"
INTERIOR C.S.	9	30'-0"	270'-0"
TOTAL	11	30'-0"	330'-0"

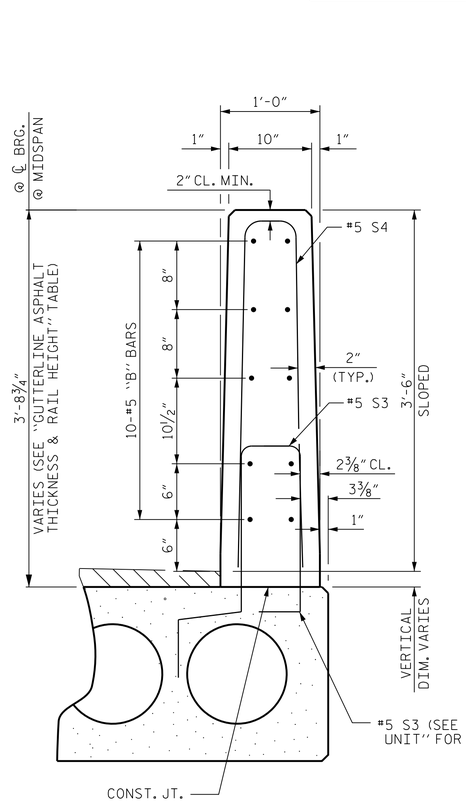

VERTICAL CONCRETE BARRIER RAIL SECTION

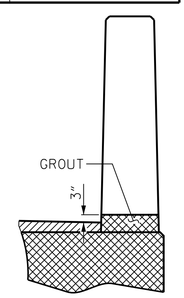

SECTION T-T
AT OPEN JOINT AT BENT
(THIS IS TO BE USED WHERE FOAM JOINT IS NOT USED)

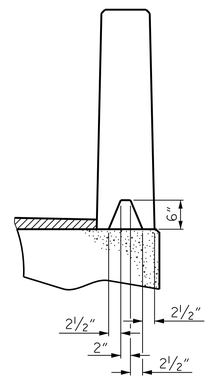

SECTION S-S
AT DAM IN OPEN JOINT
(THIS IS TO BE USED ONLY WHEN SLIP FORM IS USED)

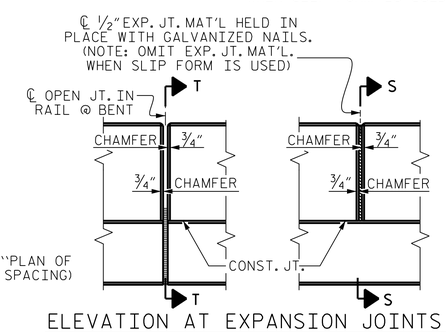

ELEVATION AT EXPANSION JOINTS

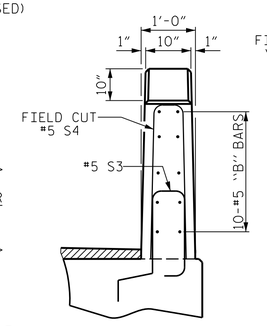

END VIEW

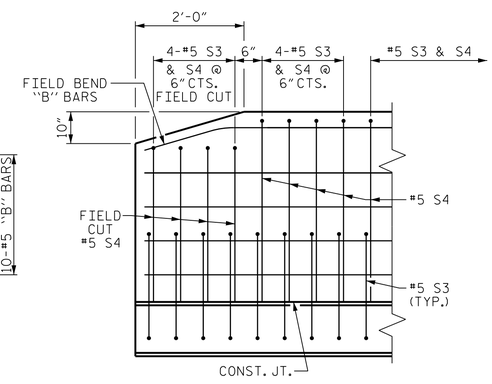

SIDE VIEW

END OF RAIL DETAILS

PROJECT NO. B-5629
BRUNSWICK COUNTY
STATION: 14+21.00 -L-

SHEET 4 OF 4

STATE OF NORTH CAROLINA
DEPARTMENT OF TRANSPORTATION
RALEIGH

3'-0" x 1'-9"
PRESTRESSED CONCRETE
CORED SLAB UNIT
90° SKEW
(SPAN B)

NORTH CAROLINA PROFESSIONAL SEAL 29112 ENGINEER RICHARD L. COFFMAN

DocuSigned by: Richard Coffman 7D4CF9F036E7414... 2/1/2023

DOCUMENT NOT CONSIDERED FINAL UNLESS ALL SIGNATURES COMPLETED

LJB INC. (NC LICENSE C-4123)
1401 AVERSBORO ROAD
GARNER, NC 27529
(919) 594-6710 · LJB.COM
We think bigger.

REVISIONS							SHEET NO.
NO.	BY:	DATE:	NO.	BY:	DATE:		SI-14
1			3				TOTAL SHEETS
2			4				23

DRAWN BY : MJM DATE : 5/4/2022
CHECKED BY : RLC DATE : 5/12/2022
ENGINEER OF RECORD : R. COFFMAN DATE : 2/2022

401_029_B5629_SMU_CS8_014.dgn
9:12:11 AM
1/24/2023

DocuSign Envelope ID: 16D1E2ED-3E13-4DD9-A1F6-2AE2BB99551D

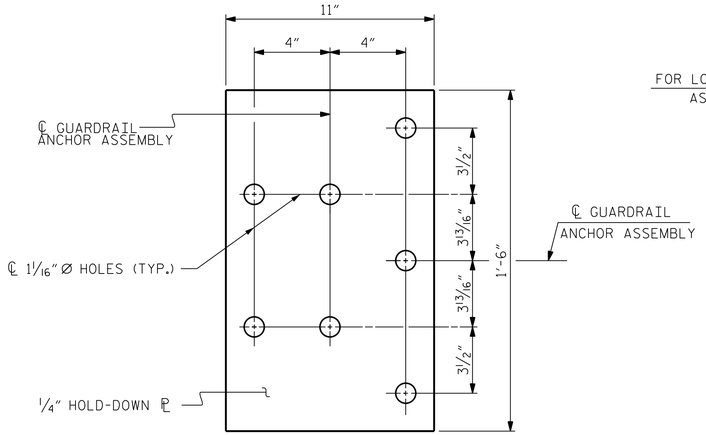

PLAN

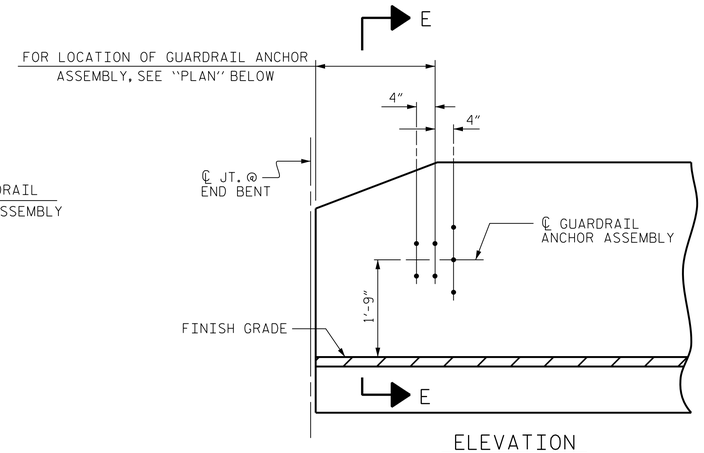

ELEVATION

NOTES

THE GUARDRAIL ANCHOR ASSEMBLY SHALL CONSIST OF A 1/4" HOLD DOWN PLATE AND 7 - 7/8" Ø BOLTS WITH NUTS AND WASHERS.

THE HOLD-DOWN PLATE SHALL CONFORM TO AASHTO M270 GRADE 36. AFTER FABRICATION, THE HOLD-DOWN PLATE SHALL BE HOT-DIP GALVANIZED IN ACCORDANCE WITH AASHTO M111.

BOLTS SHALL CONFORM TO THE REQUIREMENTS OF ASTM A307 AND NUTS SHALL CONFORM TO THE REQUIREMENTS OF AASHTO M291. BOLTS, NUTS AND WASHERS SHALL BE GALVANIZED. (AT THE CONTRACTOR'S OPTION, STAINLESS STEEL BOLTS, NUTS AND WASHERS MAY BE USED AS AN ALTERNATE FOR THE 7/8" Ø GALVANIZED BOLTS, NUTS AND WASHERS. THEY SHALL CONFORM TO OR EXCEED THE MECHANICAL REQUIREMENTS OF ASTM A307. THE USE OF THIS ALTERNATE SHALL BE APPROVED BY THE ENGINEER.)

THE GUARDRAIL ANCHOR ASSEMBLY IS REQUIRED AT ALL POINTS WHERE APPROACH GUARDRAIL IS TO BE ATTACHED TO THE END OF BARRIER RAIL. FOR POINTS OF ATTACHMENT, SEE SKETCH.

AFTER INSTALLATION, THE EXPOSED THREAD OF THE BOLT SHALL BE BURRED WITH A SHARP POINTED TOOL.

THE COST OF THE GUARDRAIL ANCHOR ASSEMBLY SHALL BE INCLUDED IN THE UNIT CONTRACT PRICE BID FOR VERTICAL CONCRETE BARRIER RAIL.

THE VERTICAL REINFORCING BARS MAY BE SHIFTED SLIGHTLY IN THE VERTICAL CONCRETE BARRIER RAIL TO CLEAR ASSEMBLY BOLTS.

THE 1 1/4" Ø HOLES SHALL BE FORMED OR DRILLED WITH A CORE BIT. IMPACT TOOLS WILL NOT BE PERMITTED. ANY CONCRETE DAMAGED BY THIS WORK SHALL BE REPAIRED TO THE SATISFACTION OF THE ENGINEER.

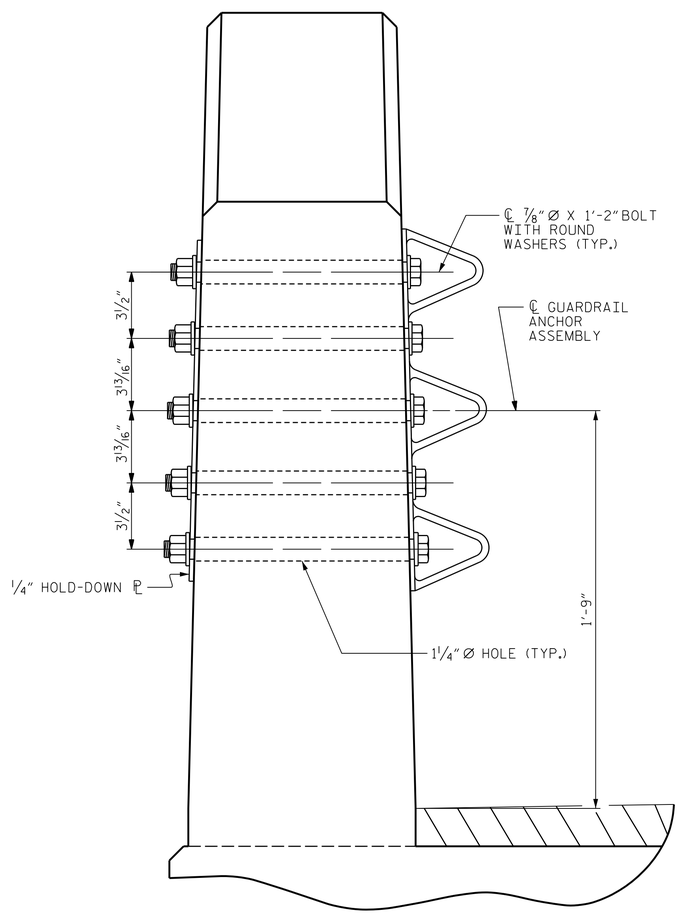

SECTION E-E

GUARDRAIL ANCHOR ASSEMBLY DETAILS

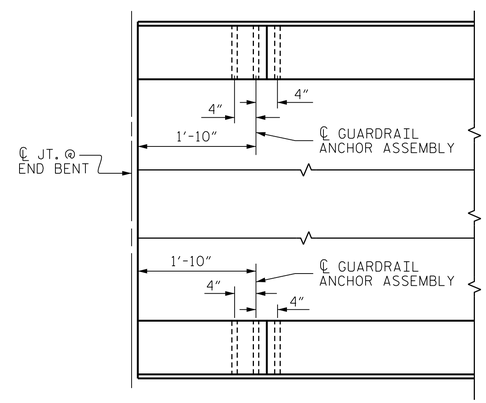

PLAN

LOCATION OF ANCHORS FOR GUARDRAIL

END BENT #1 SHOWN, END BENT #2 SIMILAR.

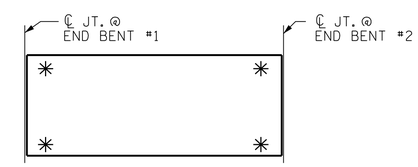

SKETCH SHOWING POINTS OF ATTACHMENT

✳ DENOTES GUARDRAIL ANCHOR ASSEMBLY

PROJECT NO. B-5629

BRUNSWICK COUNTY

STATION: 14+21.00 -L-

NORTH CAROLINA PROFESSIONAL SEAL 29112 ENGINEER RICHARD L. COFFMAN

DocuSigned by: Richard Coffman 2/1/2023
7D4CF9F028E7414

DOCUMENT NOT CONSIDERED FINAL UNLESS ALL SIGNATURES COMPLETED

STATE OF NORTH CAROLINA
DEPARTMENT OF TRANSPORTATION
RALEIGH

GUARDRAIL ANCHORAGE DETAILS FOR VERTICAL CONCRETE BARRIER RAIL

LJB INC. (NC LICENSE C-4123)
1401 AVERSBORO ROAD
GARNER, NC 27529
(919) 594-6710 · LJB.COM
We think bigger.

REVISIONS						
NO.	BY:	DATE:	NO.	BY:	DATE:	
1			3			
2			4			

SHEET NO. SI-15

TOTAL SHEETS 23

DRAWN BY : MJM DATE : 5/4/2022
CHECKED BY : RLC DATE : 5/9/2022
ENGINEER OF RECORD : R. COFFMAN DATE : 2/2022

401_031_B5629_SMU_GR_015.dgn
1/24/2023 9:12:13 AM

DocuSign Envelope ID: 16D1E2ED-3E13-4DD9-A1F6-2AE2BB99551D

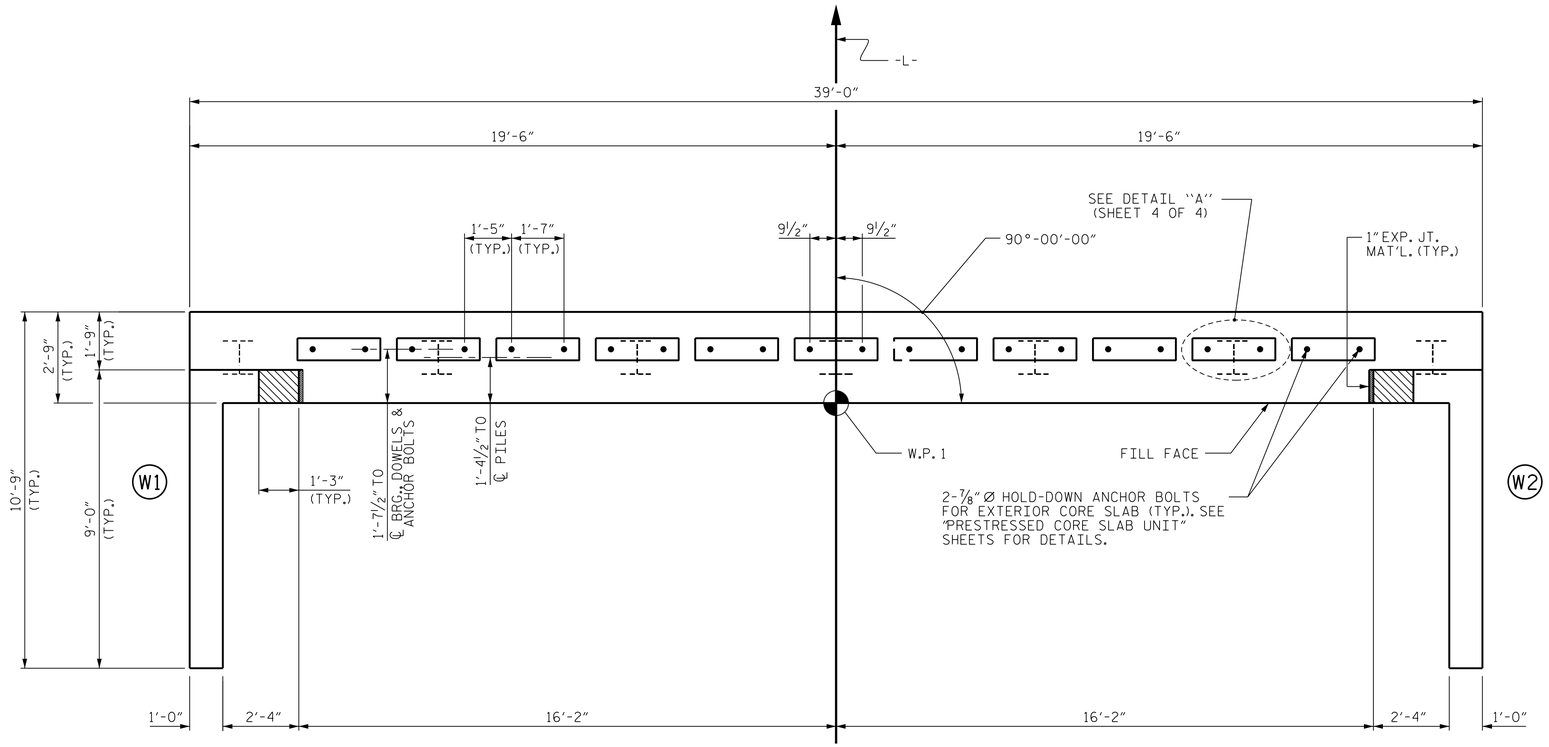

PLAN

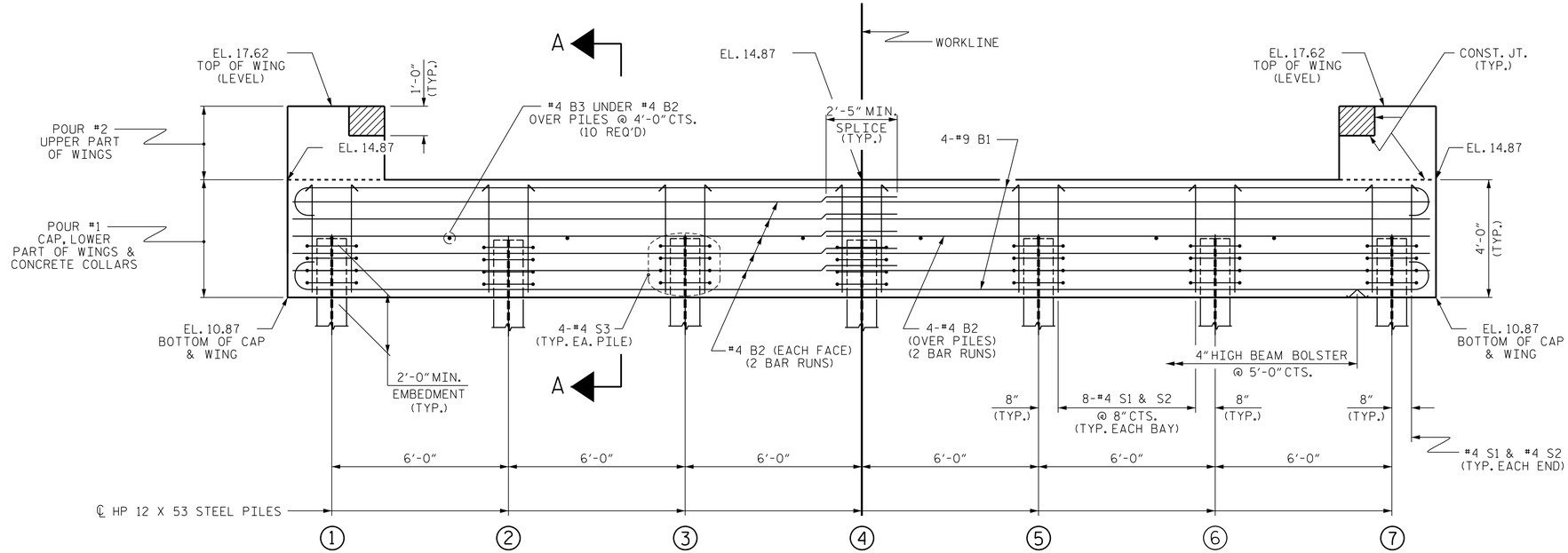

ELEVATION

WINGS NOT SHOWN FOR CLARITY.
FOR SECTION A-A, SEE SHEET 4 OF 4.
CONCRETE COLLARS FOR STEEL PILES NOT SHOWN IN PLAN AND ELEVATION VIEWS FOR CLARITY.
SEE "CORROSION PROTECTION FOR STEEL PILES DETAIL", SHEET 4 OF 4.

NOTES

STIRRUPS IN CAP MAY BE SHIFTED AS NECESSARY TO CLEAR DOWELS AND ANCHOR BOLTS.

THE CONCRETE IN THE SHADED AREA OF THE WING SHALL BE POURED AFTER THE VERTICAL CONCRETE BARRIER RAIL IS CAST IF SLIP FORMING IS USED.

FOR PILE SPLICE DETAILS, SEE SHEET 4 OF 4.

FOR WING DETAILS, SEE SHEET 3 OF 4.

PROJECT NO. B-5629
BRUNSWICK COUNTY
STATION: 14+21.00 -L-

SHEET 1 OF 4

STATE OF NORTH CAROLINA
DEPARTMENT OF TRANSPORTATION
RALEIGH

SUBSTRUCTURE
END BENT No. 1

NORTH CAROLINA PROFESSIONAL SEAL 29112 ENGINEER RICHARD L. COFFMAN

DocuSigned by: Richard Coffman 2/1/2023
7D4CF9F036E7414...

DOCUMENT NOT CONSIDERED FINAL UNLESS ALL SIGNATURES COMPLETED

LJB INC. (NC LICENSE C-4123)
1401 AVERSBORO ROAD
GARNER, NC 27529
(919) 594-6710 · LJB.COM
We think bigger.

REVISIONS						SHEET NO.
NO.	BY:	DATE:	NO.	BY:	DATE:	SI-16
1			3			TOTAL SHEETS
2			4			23

DRAWN BY : MJM DATE : 5/5/2022
CHECKED BY : RLC DATE : 5/12/2022
ENGINEER OF RECORD : R. COFFMAN DATE : 2/2022

401_033_B5629_SMU_E1_016.dgn
1/24/2023 9:12:15 AM

DocuSign Envelope ID: 16D1E2ED-3E13-4DD9-A1F6-2AE2BB99551D

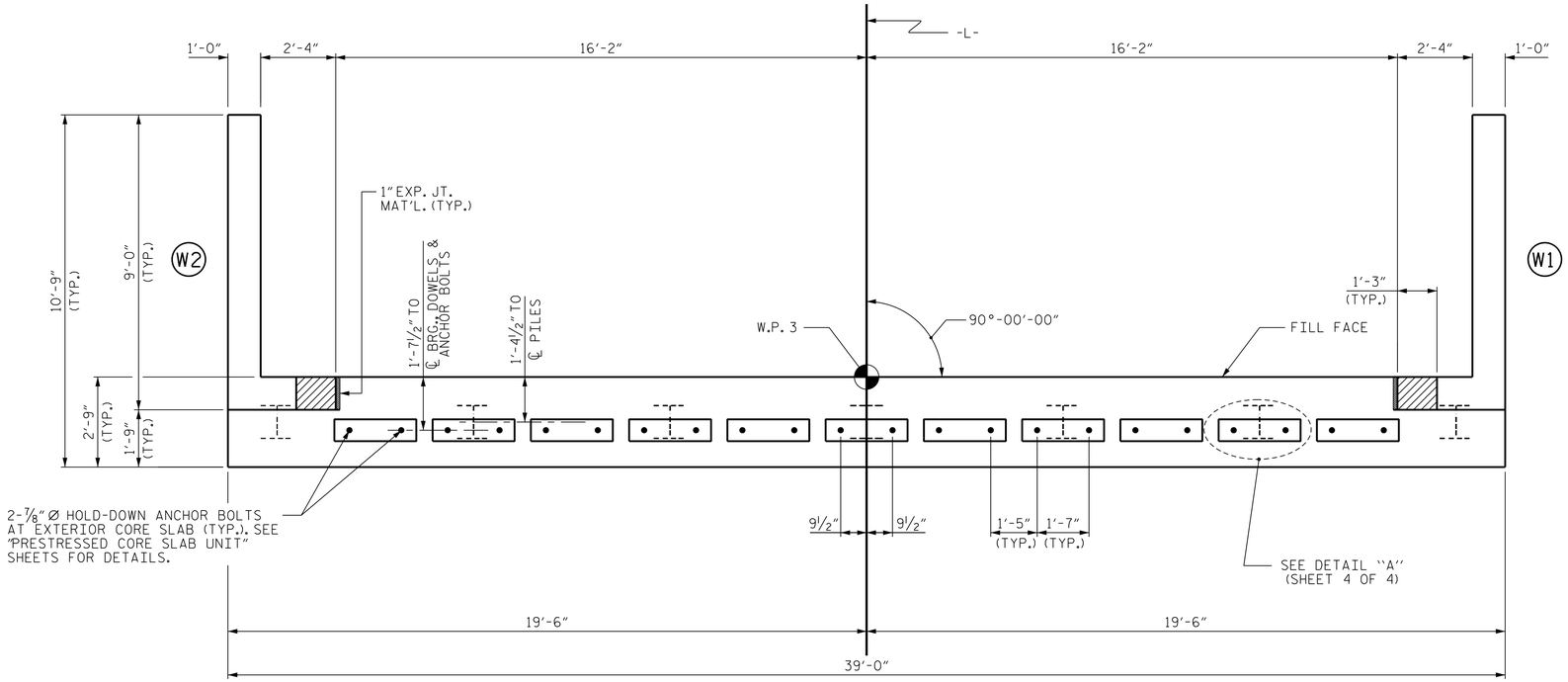

PLAN

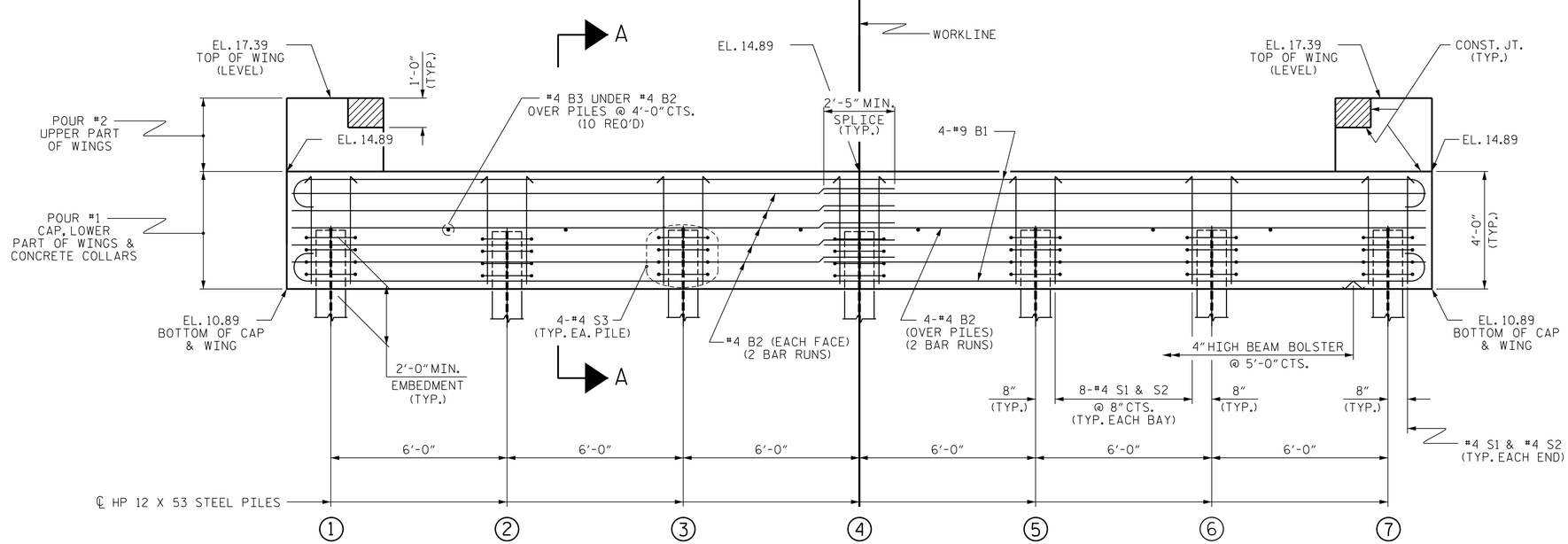

ELEVATION

WINGS NOT SHOWN FOR CLARITY.
FOR SECTION A-A, SEE SHEET 4 OF 4.
CONCRETE COLLARS FOR STEEL PILES NOT SHOWN IN PLAN AND ELEVATION VIEWS FOR CLARITY.
SEE "CORROSION PROTECTION FOR STEEL PILES DETAIL", SHEET 4 OF 4.

NOTES

STIRRUPS IN CAP MAY BE SHIFTED AS NECESSARY TO CLEAR DOWELS AND ANCHOR BOLTS.

THE CONCRETE IN THE SHADED AREA OF THE WING SHALL BE POURED AFTER THE VERTICAL CONCRETE BARRIER RAIL IS CAST IF SLIP FORMING IS USED.

FOR PILE SPLICE DETAILS, SEE SHEET 4 OF 4.

FOR WING DETAILS, SEE SHEET 3 OF 4.

PROJECT NO. B-5629
BRUNSWICK COUNTY
STATION: 14+21.00 -L-

SHEET 2 OF 4

STATE OF NORTH CAROLINA
DEPARTMENT OF TRANSPORTATION
RALEIGH

SUBSTRUCTURE
END BENT No. 2

NORTH CAROLINA PROFESSIONAL SEAL 29112 ENGINEER RICHARD L. COFFMAN

DocuSigned by: Richard Coffman 2/1/2023
7D4CF9F036E7414...

DOCUMENT NOT CONSIDERED FINAL UNLESS ALL SIGNATURES COMPLETED

LJB INC. (NC LICENSE C-4123)
1401 AVERSBORO ROAD
GARNER, NC 27529
(919) 594-6710 · LJB.COM
We think bigger.

REVISIONS						
NO.	BY:	DATE:	NO.	BY:	DATE:	
1			3			
2			4			

SHEET NO. SI-17
TOTAL SHEETS 23

DRAWN BY : MJM DATE : 5/5/2022
CHECKED BY : RLC DATE : 5/12/2022
ENGINEER OF RECORD : R. COFFMAN DATE : 2/2022

401.035_B5629_SMU_E2_017.dgn
9:12:17 AM
1/24/2023

DocuSign Envelope ID: 16D1E2ED-3E13-4DD9-A1F6-2AE2BB99551D

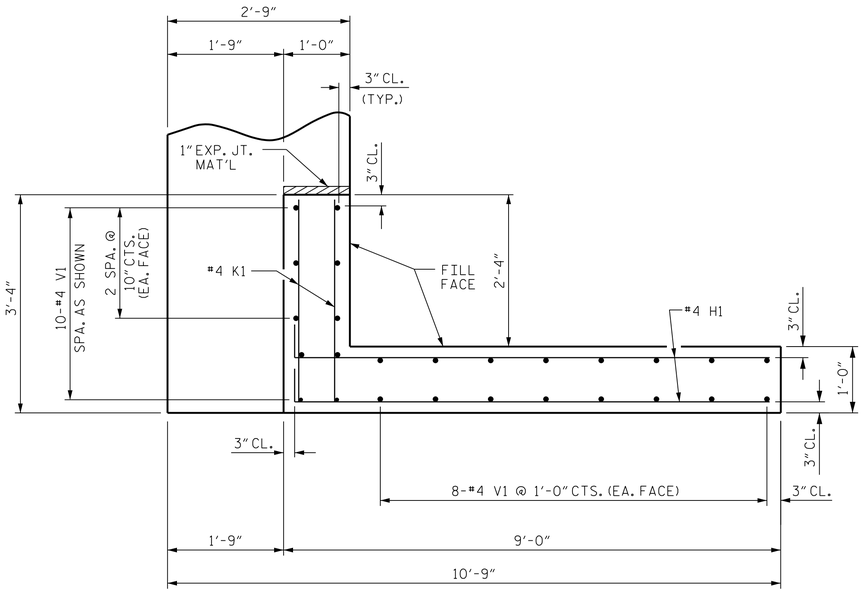

PLAN OF WING (W1)

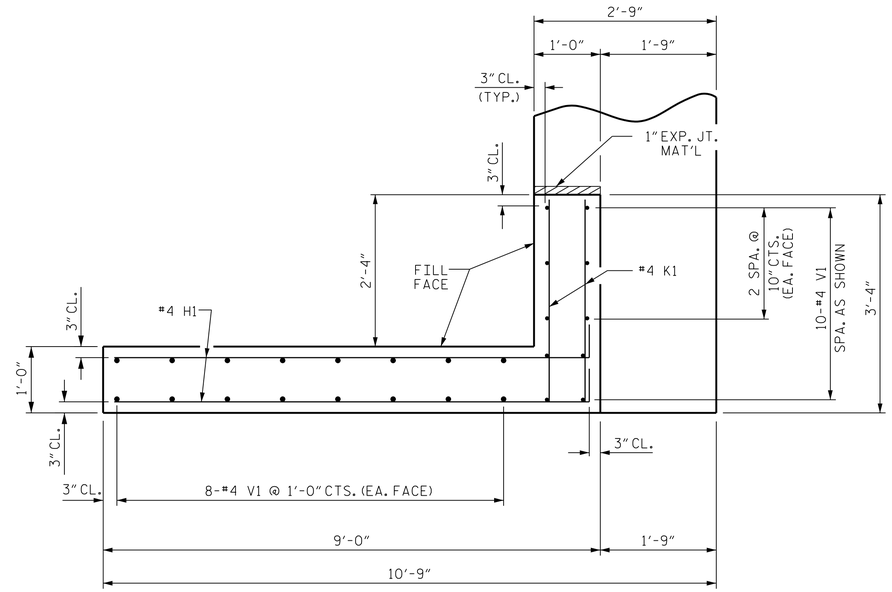

PLAN OF WING (W2)

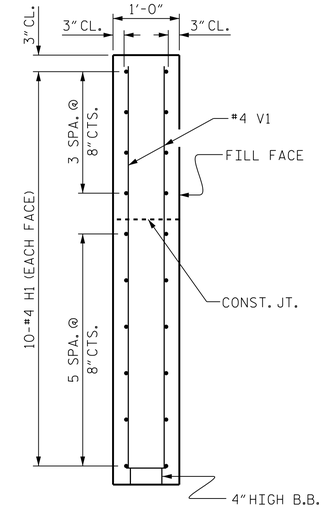

SECTION X-X

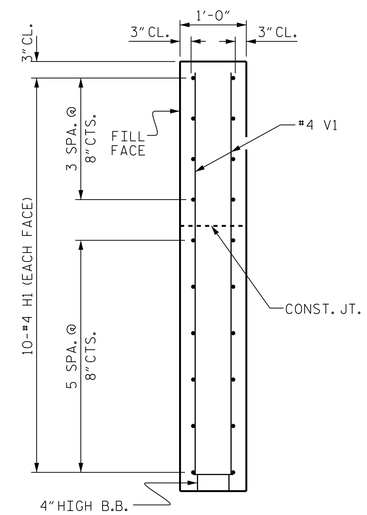

SECTION Y-Y

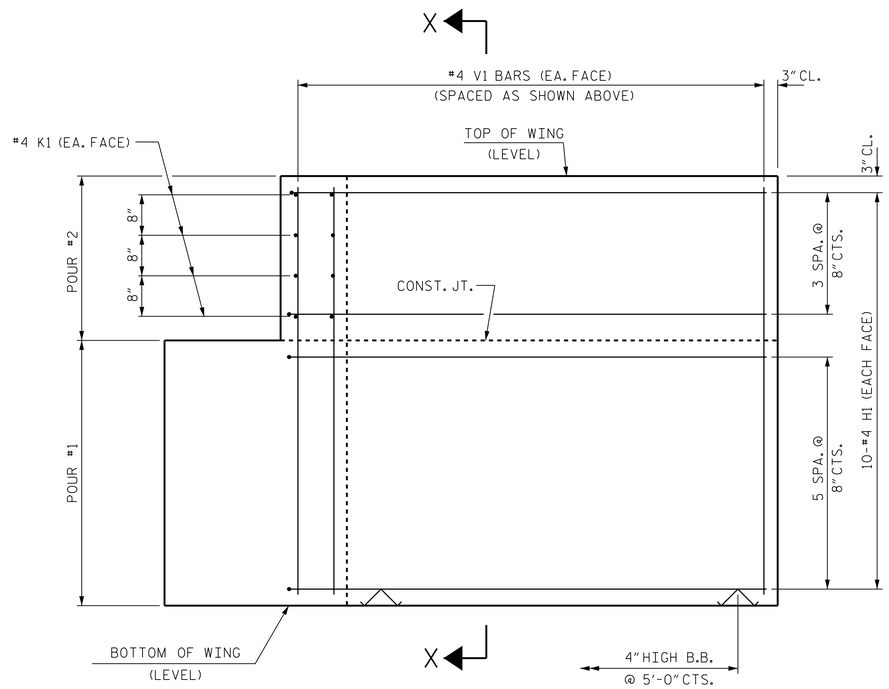

ELEVATION OF WING (W1)

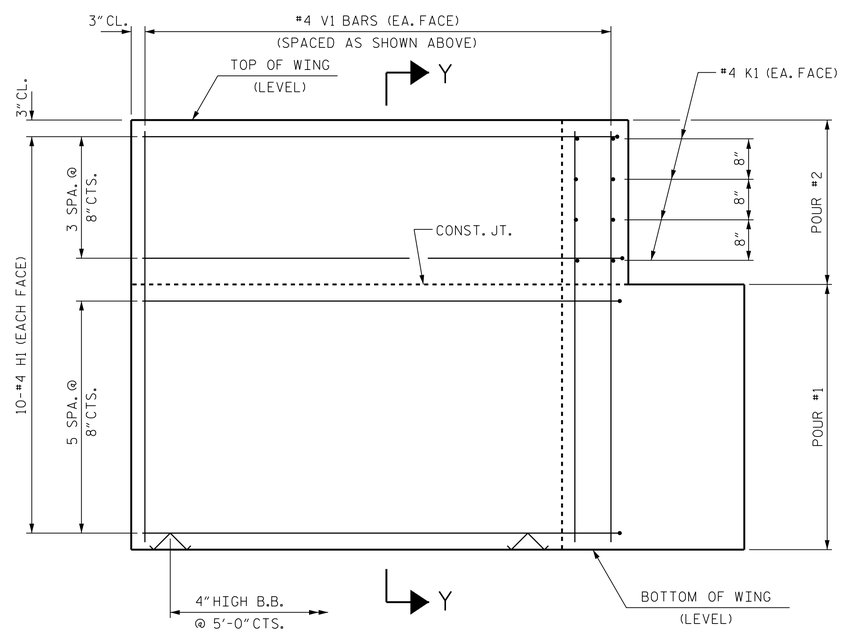

ELEVATION OF WING (W2)

WING DETAILS

PROJECT NO. B-5629

BRUNSWICK COUNTY

STATION: 14+21.00 -L-

SHEET 3 OF 4

STATE OF NORTH CAROLINA
DEPARTMENT OF TRANSPORTATION
RALEIGH

SUBSTRUCTURE

END BENT
WING DETAILS

NORTH CAROLINA PROFESSIONAL SEAL 29112 ENGINEER RICHARD L. COFFMAN

DocuSigned by: Richard Coffman 2/1/2023
7D4CF9F036E7414...

DOCUMENT NOT CONSIDERED FINAL UNLESS ALL SIGNATURES COMPLETED

LJB INC. (NC LICENSE C-4123)
1401 AVERSBORO ROAD
GARNER, NC 27529
(919) 594-6710 · LJB.COM
We think bigger.

REVISIONS						
NO.	BY:	DATE:	NO.	BY:	DATE:	
1			3			
2			4			

SHEET NO. SI-18

TOTAL SHEETS 23

DRAWN BY :	MJM	DATE :	5/5/2022
CHECKED BY :	RLC	DATE :	5/12/2022
ENGINEER OF RECORD :	R. COFFMAN	DATE :	2/2022

401_037_B5629_SMU_E3_018.dgn
9:12:19 AM
1/24/2023

DocuSign Envelope ID: 16D1E2ED-3E13-4DD9-A1F6-2AE2BB99551D

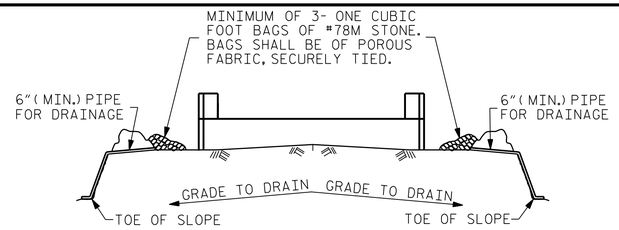

BAGGED STONE AND PIPE SHALL BE PLACED IMMEDIATELY AFTER COMPLETION OF END BENT EXCAVATION. PIPE MAY BE EITHER CONCRETE, CORRUGATED STEEL, CORRUGATED ALUMINUM ALLOY, OR CORRUGATED PLASTIC. PERFORATED PIPE WILL NOT BE ALLOWED.

BAGGED STONE SHALL REMAIN IN PLACE UNTIL THE ENGINEER DIRECTS THAT IT BE REMOVED. THE CONTRACTOR SHALL REMOVE AND DISPOSE OF SILT ACCUMULATIONS AT BAGGED STONE WHEN SO DIRECTED BY THE ENGINEER. BAGS SHALL BE REMOVED AND REPLACED WHENEVER THE ENGINEER DETERMINES THAT THEY HAVE DETERIORATED AND LOST THEIR EFFECTIVENESS.

NO SEPARATE PAYMENT WILL BE MADE FOR THIS WORK AND THE ENTIRE COST OF THIS WORK SHALL BE INCLUDED IN THE UNIT CONTRACT PRICE BID FOR THE SEVERAL PAY ITEMS.

TEMPORARY DRAINAGE AT END BENT

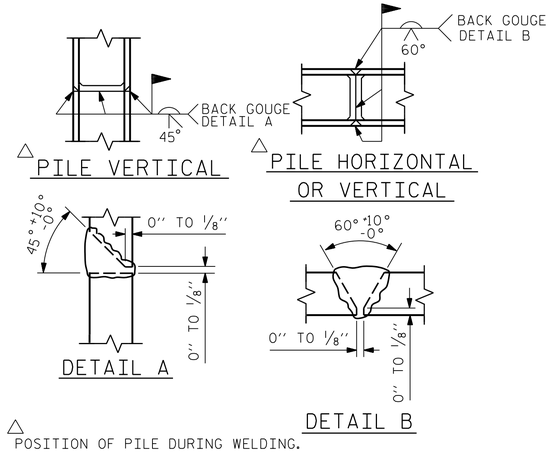

△ POSITION OF PILE DURING WELDING.

PILE SPLICE DETAILS

BAR TYPES

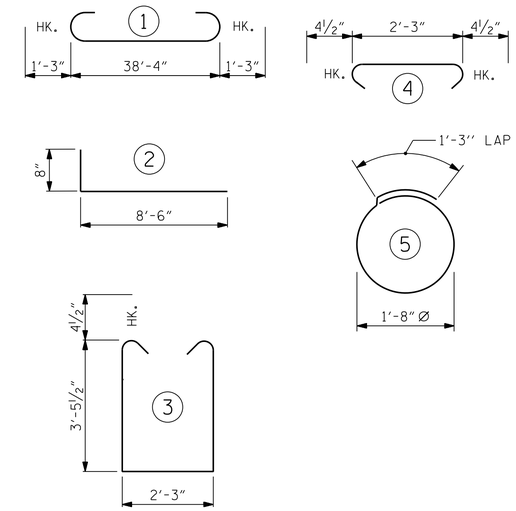

ALL BAR DIMENSIONS ARE OUT TO OUT.

BILL OF MATERIAL

FOR END BENT No. 1

BAR	NO.	SIZE	TYPE	LENGTH	WEIGHT
B1	8	#9	1	40'-10"	1111
B2	28	#4	STR	20'-6"	383
B3	10	#4	STR	2'-3"	15
D1	18	#6	STR	1'-6"	41
H1	40	#4	2	9'-2"	245
K1	16	#4	STR	2'-10"	30
S1	50	#4	3	9'-11"	331
S2	50	#4	4	3'-0"	100
S3	28	#4	5	6'-6"	122
V1	52	#4	STR	6'-2"	214

EPOXY COATED REINFORCING STEEL (FOR ONE END BENT) 2592 LBS.

CLASS AA CONCRETE BREAKDOWN (FOR ONE END BENT)

POUR #1 CAP, LOWER PART OF WINGS & COLLARS 19.5 C.Y.

POUR #2 UPPER PART OF WINGS 2.3 C.Y.

TOTAL CLASS AA CONCRETE 21.8 C.Y.

FOR END BENT No. 2

BAR	NO.	SIZE	TYPE	LENGTH	WEIGHT
B1	8	#9	1	40'-10"	1111
B2	28	#4	STR	20'-6"	383
B3	10	#4	STR	2'-3"	15
D1	18	#6	STR	1'-6"	41
H1	40	#4	2	9'-2"	245
K1	16	#4	STR	2'-10"	30
S1	50	#4	3	9'-11"	331
S2	50	#4	4	3'-0"	100
S3	28	#4	5	6'-6"	122
V1	52	#4	STR	5'-11"	206

EPOXY COATED REINFORCING STEEL (FOR ONE END BENT) 2584 LBS.

CLASS AA CONCRETE BREAKDOWN (FOR ONE END BENT)

POUR #1 CAP, LOWER PART OF WINGS & COLLARS 19.5 C.Y.

POUR #2 UPPER PART OF WINGS 2.1 C.Y.

TOTAL CLASS AA CONCRETE 21.6 C.Y.

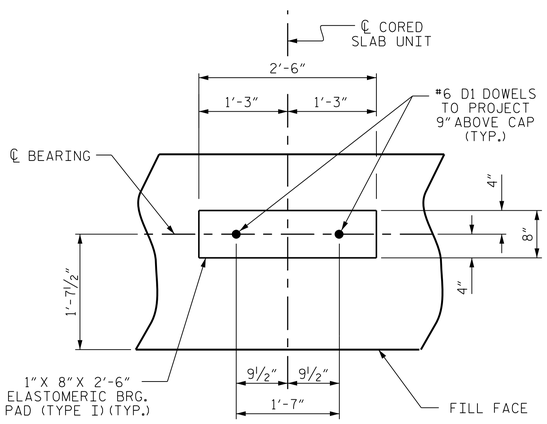

DETAIL "A"

(END BENT No. 1 SHOWN, END BENT No. 2 SIMILAR BY ROTATION)

NOTES

PROVIDE A MINIMUM OF 3" CONCRETE COVER FROM EXTERIOR FACE OF CONCRETE MEMBERS TO REINFORCING STEEL, UNLESS OTHERWISE NOTED ON PLANS.

ANCHOR BOLTS SHALL MEET THE REQUIREMENTS OF ASTM A449. ANCHOR PLATES, WASHERS, AND NUTS SHALL MEET THE REQUIREMENTS OF THE STANDARD SPECIFICATIONS. ANCHOR BOLTS, ANCHOR PLATES, WASHERS, AND NUTS SHALL BE GALVANIZED IN ACCORDANCE WITH THE STANDARD SPECIFICATIONS.

NO SEPARATE PAYMENT SHALL BE MADE FOR THE ANCHOR BOLTS, ANCHOR PLATES, WASHERS, AND NUTS. THE COST OF THE MATERIAL AND INSTALLATION SHALL BE CONSIDERED INCIDENTAL TO VARIOUS PAY ITEMS.

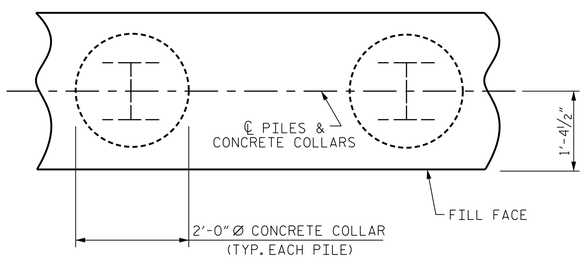

PLAN

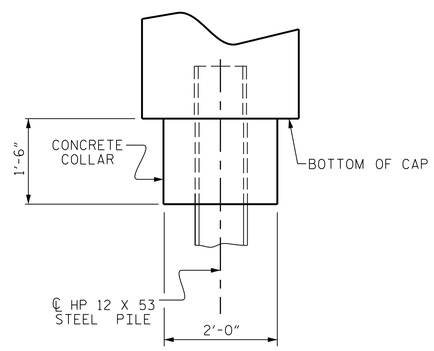

ELEVATION

CORROSION PROTECTION FOR STEEL PILES DETAIL

(END BENT No. 1 SHOWN, END BENT No. 2 SIMILAR BY ROTATION)

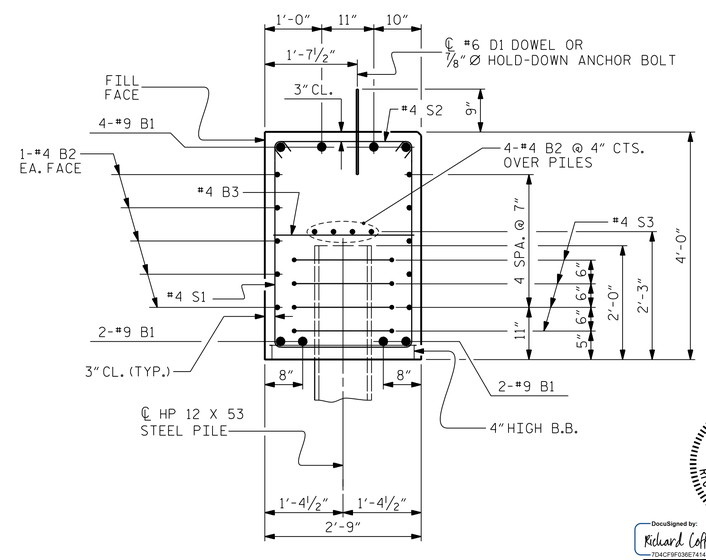

SECTION A-A

(CONCRETE COLLAR NOT SHOWN FOR CLARITY. SEE "CORROSION PROTECTION FOR STEEL PILES DETAIL.")

NORTH CAROLINA PROFESSIONAL SEAL 29112 ENGINEER RICHARD L. COFFMAN

DocuSigned by: Richard Coffman 7D4CF9F036E7414... 2/1/2023

DOCUMENT NOT CONSIDERED FINAL UNLESS ALL SIGNATURES COMPLETED

LJB INC. (NC LICENSE C-4123)
1401 AVERSBORO ROAD
GARNER, NC 27529
(919) 594-6710 · LJB.COM
We think bigger.

PROJECT NO. B-5629
BRUNSWICK COUNTY
STATION: 14+21.00 -L-

SHEET 4 OF 4

STATE OF NORTH CAROLINA
DEPARTMENT OF TRANSPORTATION
RALEIGH

SUBSTRUCTURE
END BENT No. 1 & 2 DETAILS

REVISIONS							SHEET NO.
NO.	BY:	DATE:	NO.	BY:	DATE:		S-19
1			3				TOTAL SHEETS
2			4				23

DRAWN BY : MJM DATE : 5/5/2022
CHECKED BY : RLC DATE : 5/12/2022
ENGINEER OF RECORD : R. COFFMAN DATE : 2/2022

401.039.B5629.SMU.E4.019.dgn 9:12:21 AM 1/24/2023

DocuSign Envelope ID: 16D1E2ED-3E13-4DD9-A1F6-2AE2BB99551D

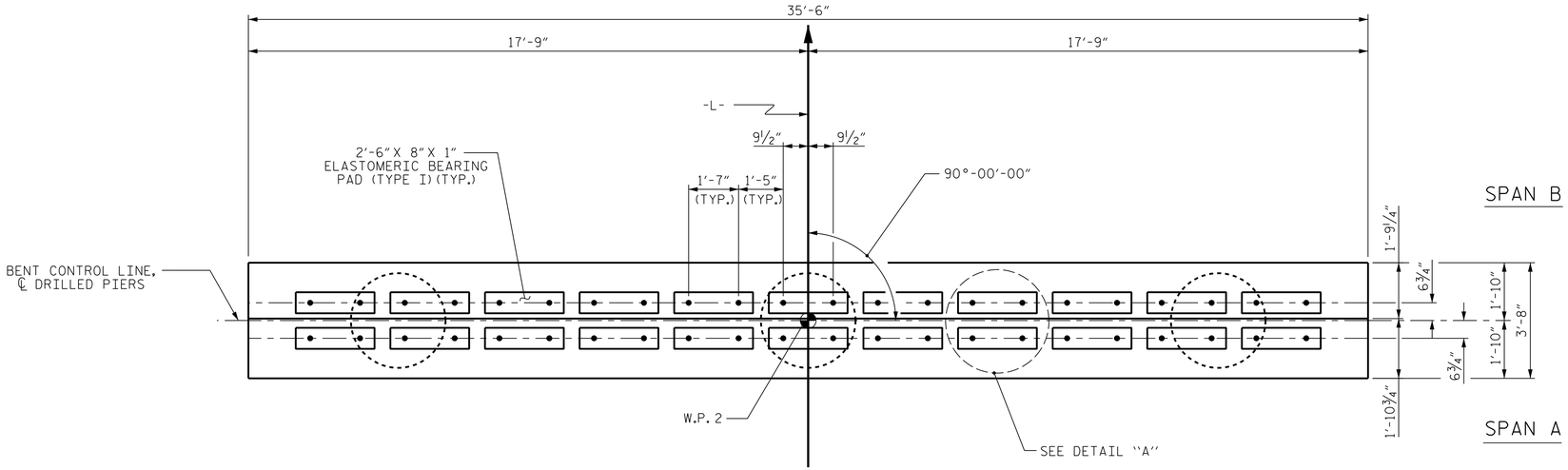

PLAN

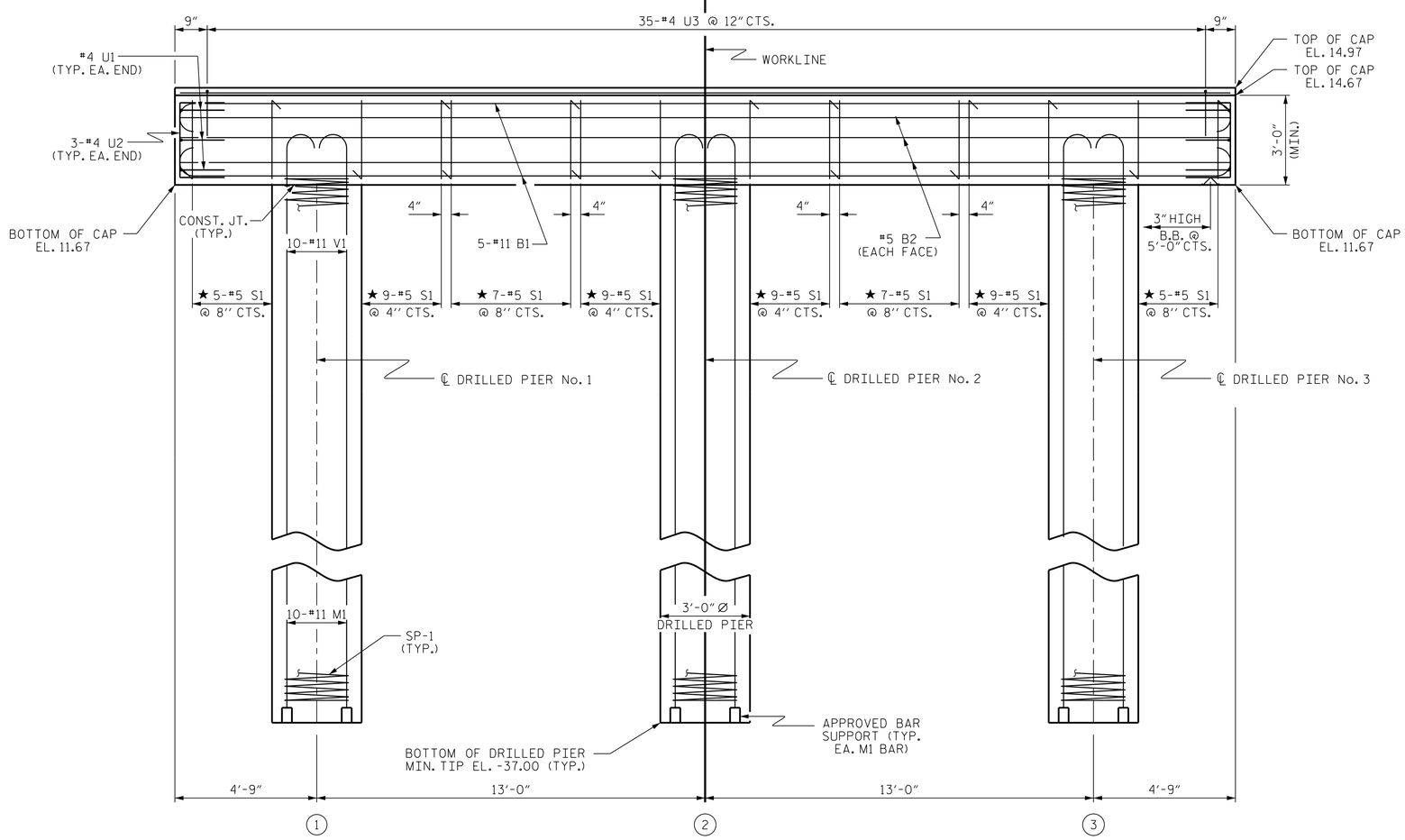

ELEVATION

DIMENSIONS & REINFORCING STEEL ARE TYPICAL FOR EACH DRILLED PIER UNLESS OTHERWISE NOTED.

NOTES

STIRRUPS IN CAP MAY BE SHIFTED AS NECESSARY TO CLEAR DOWELS.

HOOKS ON "V" BARS MAY BE TURNED AS NECESSARY FOR PLACING REINFORCING STEEL.

FOR DRILLED PIERS, SEE SECTION 411 OF THE STANDARD SPECIFICATIONS.

ALL STEEL IN THE DRILLED PIERS IS INCLUDED IN THE PAY ITEMS FOR "REINFORCING STEEL" AND "SPIRAL COLUMN REINFORCING STEEL."

★ INVERT ALTERNATE STIRRUPS.

THE CONTRACTOR'S ATTENTION IS CALLED TO THE FACT THAT THE LONGITUDINAL REINFORCEMENT FOR DRILLED PIERS IS DETAILED WITH 3 FEET OF EXTRA LENGTH.

ALL BAR SUPPORTS USED IN THE BENT CAP AND DRILLED SHAFTS AND INCIDENTAL REINFORCING STEEL SHALL BE EPOXY COATED IN ACCORDANCE WITH STANDARD SPECIFICATIONS.

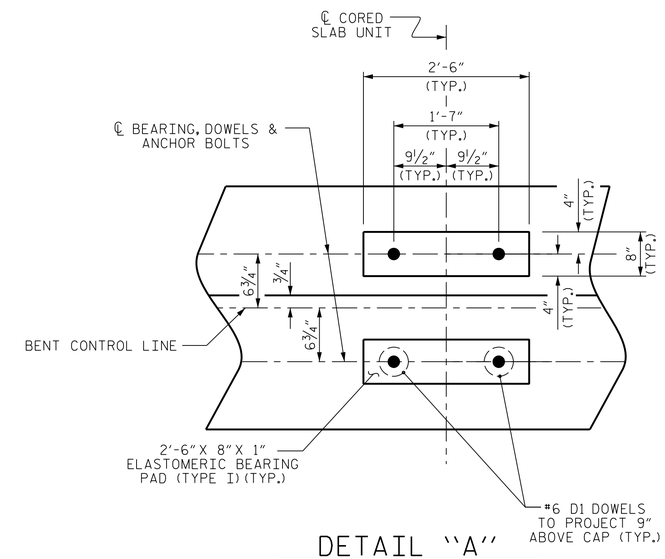

DETAIL "A"

(DIMENSIONS ARE TYPICAL EACH BEARING)

PROJECT NO. B-5629

BRUNSWICK COUNTY

STATION: 14+21.00 -L-

SHEET 1 OF 2

STATE OF NORTH CAROLINA
DEPARTMENT OF TRANSPORTATION
RALEIGH

SUBSTRUCTURE
BENT No. 1

NORTH CAROLINA PROFESSIONAL SEAL 29112 ENGINEER RICHARD L. COFFMAN

DocuSigned by: Richard Coffman 2/1/2023
7D4CF0F036E7414...

DOCUMENT NOT CONSIDERED FINAL UNLESS ALL SIGNATURES COMPLETED

LJB INC. (NC LICENSE C-4123)
1401 AVERSBORO ROAD
GARNER, NC 27529
(919) 594-6710 · LJB.COM
We think bigger.

REVISIONS								SHEET NO.
NO.	BY:	DATE:	NO.	BY:	DATE:			SI-20
1			3					TOTAL SHEETS
2			4					23

DRAWN BY : MJM	DATE : 5/9/2022		
CHECKED BY : RLC	DATE : 5/12/2022		
ENGINEER OF RECORD : R. COFFMAN	DATE : 2/2022		

401_041_B5629_SMU_B1_020.dgn 9:12:23 AM 1/24/2023

DocuSign Envelope ID: 16D1E2ED-3E13-4DD9-A1F6-2AE2BB99551D

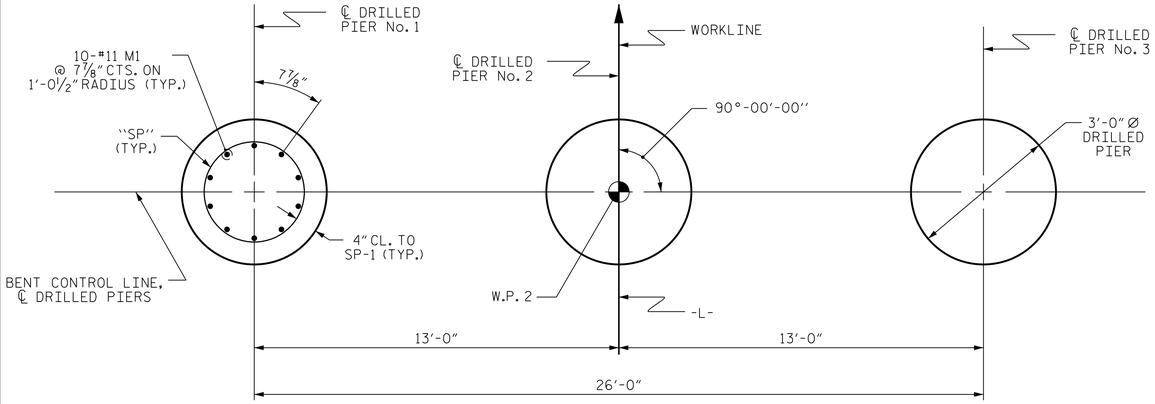

PLAN OF DRILLED PIERS

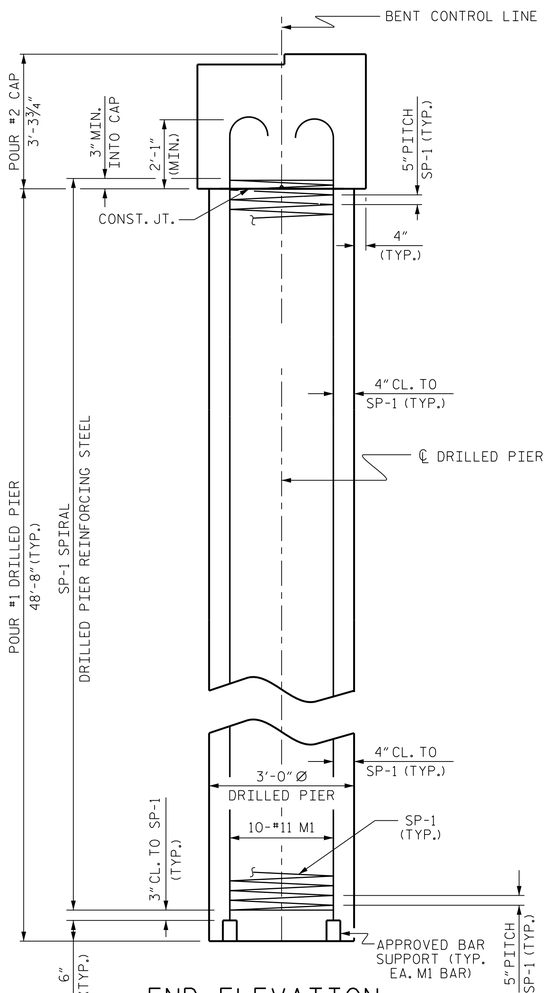

END ELEVATION

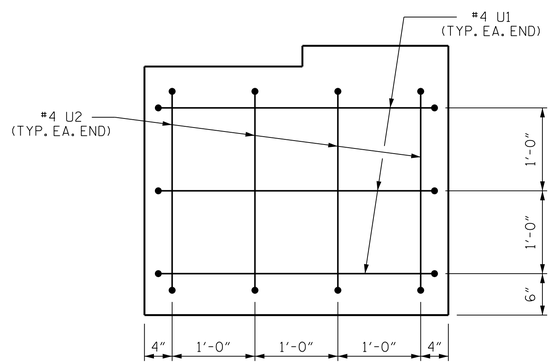

END OF CAP VIEW

(TYPICAL BOTH ENDS)

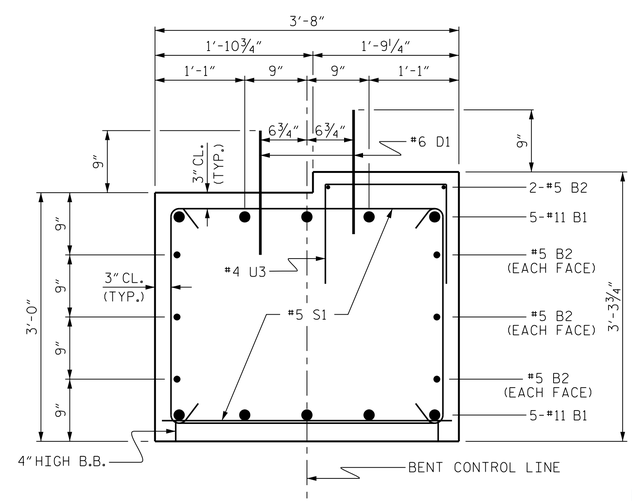

SECTION THRU CAP

BAR TYPES

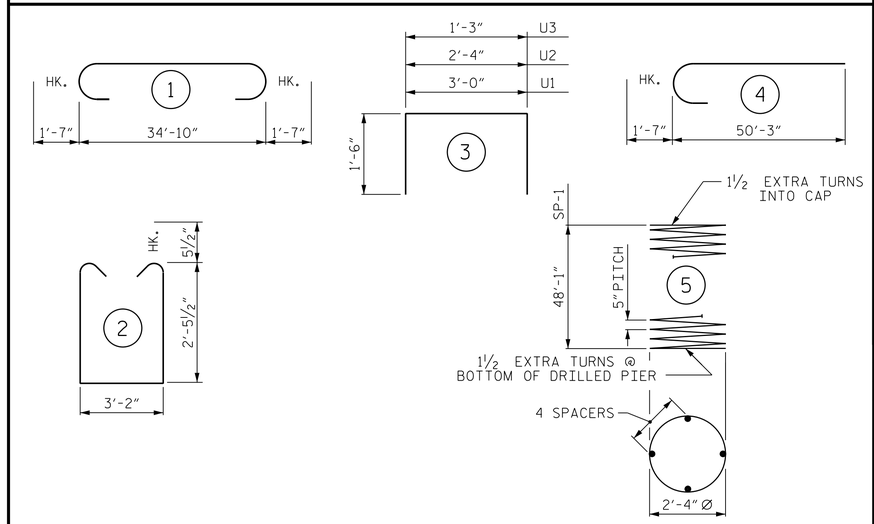

ALL BAR DIMENSIONS ARE OUT TO OUT

BILL OF MATERIAL

FOR ONE BENT

BAR	NO.	SIZE	TYPE	LENGTH	WEIGHT
B1	10	#11	1	38'-0"	2019
B2	8	#5	STR	35'-0"	292
D1	36	#6	STR	1'-6"	81
M1	30	#11	4	51'-10"	8262
S1	60	#5	2	9'-0"	563
U1	6	#4	3	6'-0"	24
U2	8	#4	3	5'-4"	29
U3	35	#4	3	4'-3"	99

EPOXY COATED REINFORCING STEEL (FOR ONE BENT) 11369 LBS.

SP-1	3	*	5	862'-9"	2670

EPOXY COATED SPIRAL COLUMN REINFORCING STEEL (FOR ONE BENT) 2670 LBS.

* THE SP-1 SPIRAL REINFORCING STEEL SHALL BE W31 OR D-31 COLD DRAWN WIRE OR #5 PLAIN OR DEFORMED BAR.

CLASS AA CONCRETE BREAKDOWN (FOR ONE BENT)

POUR #2 (CAP) 16.0 C.Y.

TOTAL CLASS AA CONCRETE 16.0 C.Y.

DRILLED PIERS: (FOR ONE BENT)

DRILLED PIER CONCRETE

POUR #1 (DRILLED PIERS) ** 38.3 C.Y.

** LENGTH OF DRILLED PIER IS MEASURED FROM BOTTOM OF CAP TO TIP ELEVATION OF DRILLED PIER, SEE SUMMARY OF DRILLED PIER INFORMATION/INSTALLATION TABLE ON SHEET S1-3.

*** LENGTH OF PERMANENT STEEL CASING PER PIER IS MEASURED FROM BOTTOM OF BENT CAP TO TIP ELEVATION OF CASING, SEE SUMMARY OF DRILLED PIER INFORMATION/ INSTALLATION TABLE ON SHEET S1-3.

PROJECT NO. B-5629

BRUNSWICK COUNTY

STATION: 14+21.00 -L-

SHEET 2 OF 2

STATE OF NORTH CAROLINA
DEPARTMENT OF TRANSPORTATION
RALEIGH

SUBSTRUCTURE
BENT No. 1

NORTH CAROLINA PROFESSIONAL SEAL 29112 ENGINEER RICHARD L. COFFMAN

DocuSigned by: Richard Coffman 2/1/2023
7D4CF9E03BE7414...

DOCUMENT NOT CONSIDERED FINAL UNLESS ALL SIGNATURES COMPLETED

LJB INC. (NC LICENSE C-4123)
1401 AVERSBORO ROAD
GARNER, NC 27529
(919) 594-6710 · LJB.COM
We think bigger.

REVISIONS							SHEET NO.
NO.	BY:	DATE:	NO.	BY:	DATE:		S1-21
1			3				TOTAL SHEETS
2			4				23

DRAWN BY : MJM DATE : 5/9/2022
CHECKED BY : RLC DATE : 5/12/2022
ENGINEER OF RECORD : R. COFFMAN DATE : 2/2022

401_043_B5629_SMU_B2_021.dgn 9:12:25 AM 1/24/2023

DocuSign Envelope ID: 16D1E2ED-3E13-4DD9-A1F6-2AE2BB99551D

NOTES :

FOR BERM WIDTH DIMENSIONS, SEE GENERAL DRAWING.

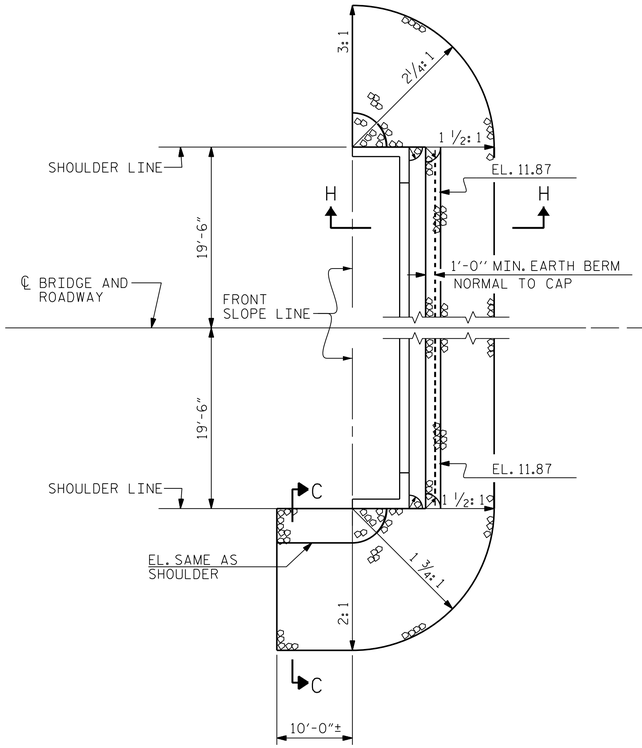

PLAN - END BENT No. 1

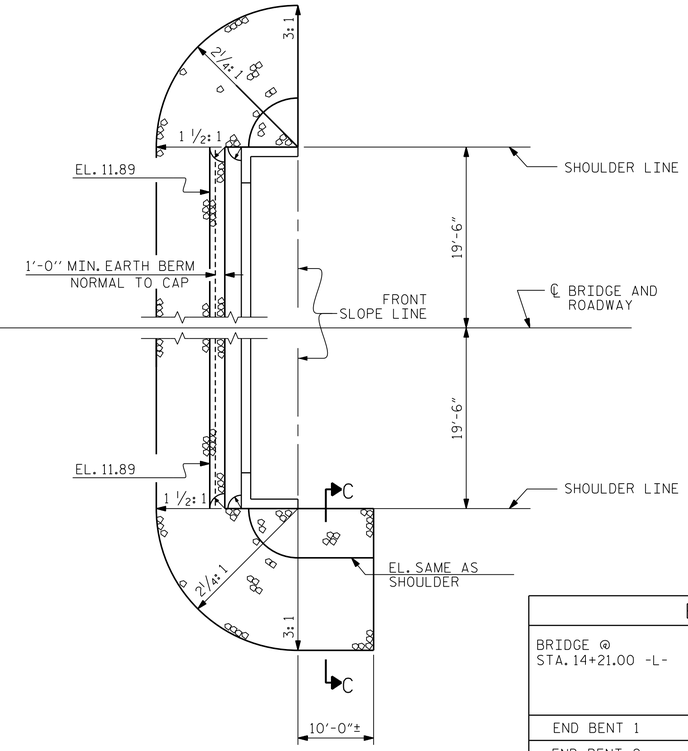

PLAN - END BENT No. 2

ESTIMATED QUANTITIES		
BRIDGE @ STA. 14+21.00 -L-	RIP RAP CLASS II (2'-0" THICK)	GEOTEXTILE FOR DRAINAGE
	TONS	SQUARE YARDS
END BENT 1	63	69.4
END BENT 2	61	67.3

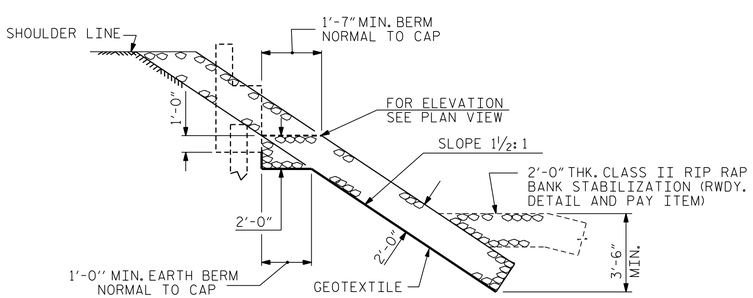

SECTION H-H

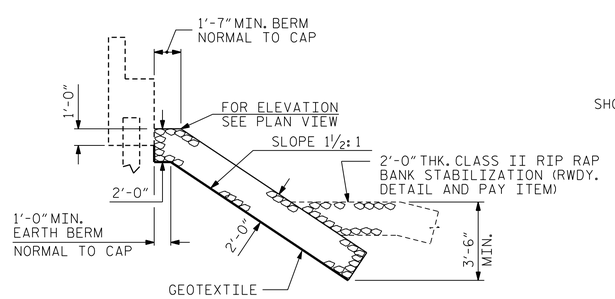

℄ SECTION

BERM RIP RAPPED

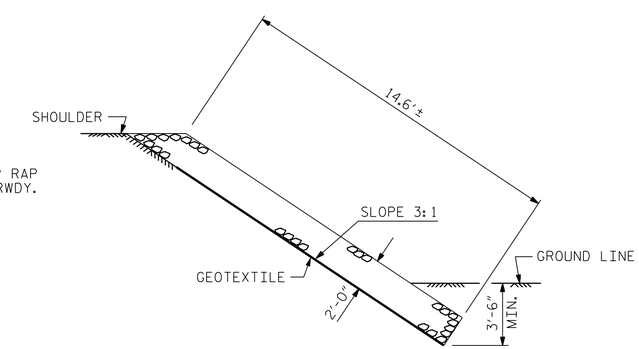

SECTION C-C

PROJECT NO. B-5629

BRUNSWICK COUNTY

STATION: 14+21.00 -L-

STATE OF NORTH CAROLINA
DEPARTMENT OF TRANSPORTATION
RALEIGH

RIP RAP DETAILS

NORTH CAROLINA PROFESSIONAL SEAL 29112 ENGINEER RICHARD L. COFFMAN

DocuSigned by: Richard Coffman 2/1/2023
704CF9F03667414...

DOCUMENT NOT CONSIDERED FINAL UNLESS ALL SIGNATURES COMPLETED

LJB INC. (NC LICENSE C-4123)
1401 AVERSBORO ROAD
GARNER, NC 27529
(919) 594-6710 · LJB.COM
We think bigger.

REVISIONS								SHEET NO.
NO.	BY:	DATE:	NO.	BY:	DATE:			SI-22
1			3					TOTAL SHEETS
2			4					23

DRAWN BY : MJM DATE : 5/9/2022
CHECKED BY : RLC DATE : 5/12/2022
ENGINEER OF RECORD : R. COFFMAN DATE : 2/2022

401_045_B5629_SMU_RR_022.dgn
9:12:27 AM
1/24/2023

DocuSign Envelope ID: 16D1E2ED-3E13-4DD9-A1F6-2AE2BB99551D

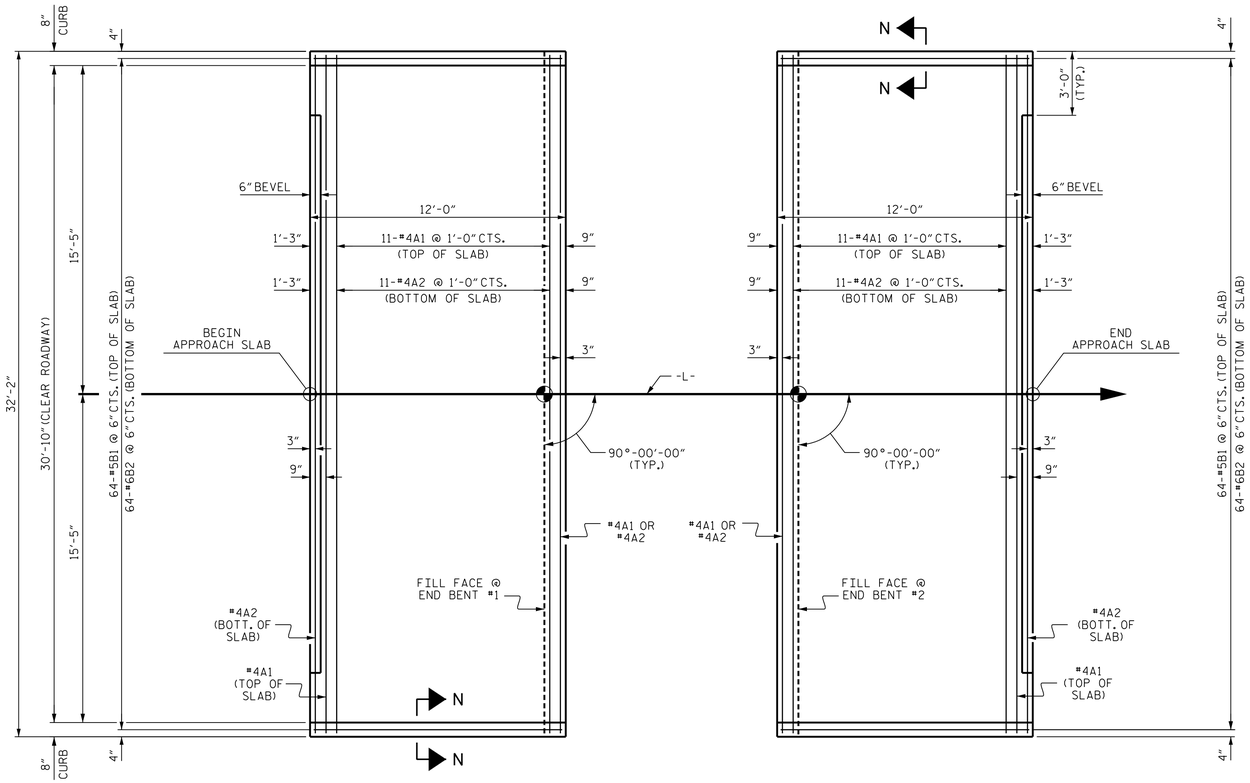

PLAN @ END BENT #1

PLAN @ END BENT #2

DIMENSIONS SHOWN ARE TYPICAL FOR BOTH APPROACH SLABS

NOTES

FOR BRIDGE APPROACH FILL INCLUDING GEOTEXTILE, 4" Ø DRAINAGE PIPE, AND SELECT MATERIAL BACKFILL, SEE ROADWAY PLANS.

GEOTEXTILE SHALL BE TYPE 1 IN ACCORDANCE WITH THE STANDARD SPECIFICATIONS SECTION 1056.

SELECT MATERIAL BACKFILL (CLASS V OR CLASS VI) SHALL BE IN ACCORDANCE WITH STANDARD SPECIFICATIONS SECTION 1016.

SELECT MATERIAL BACKFILL IS TO BE CONTINUOUS ALONG FILL FACE OF BACKWALL FROM OUTSIDE EDGE TO OUTSIDE EDGE OF APPROACH SLAB.

FOR THE 4" Ø DRAINAGE PIPE OUTLET(S), SEE ROADWAY STANDARD DRAWINGS.

AREA BETWEEN THE WINGWALL AND APPROACH SLAB SHALL BE GRADED TO DRAIN THE WATER AWAY FROM THE FILL FACE OF THE BRIDGE AND SHALL BE PAVED. SEE ROADWAY PLANS.

APPROACH SLAB GROOVING IS NOT REQUIRED.

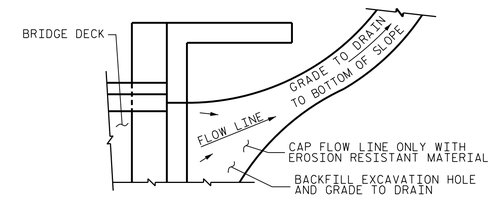

NOTE: IF THE APPROACH SLAB IS NOT CONSTRUCTED IMMEDIATELY AFTER THE BACKFILLING OF THE END BENT EXCAVATION, GRADE TO DRAIN TO THE BOTTOM OF THE SLOPE AND PROVIDE EROSION RESISTANT MATERIAL, SUCH AS FIBERGLASS ROVING OR AS DIRECTED BY THE ENGINEER TO PREVENT SOIL EROSION AND TO PROTECT THE AREA ADJACENT TO THE STRUCTURE. THE CONTRACTOR WILL BE REQUIRED TO REMOVE THESE MATERIALS PRIOR TO CONSTRUCTION OF THE APPROACH SLAB.

BILL OF MATERIAL

APPROACH SLAB AT EB #1

BAR	NO.	SIZE	TYPE	LENGTH	WEIGHT
A1	13	#4	STR	31'-10"	276
A2	13	#4	STR	31'-10"	276
B1	64	#5	STR	11'-2"	745
B2	64	#6	STR	11'-8"	1121
EPOXY COATED REINFORCING STEEL				LBS.	2418
CLASS AA CONCRETE				C. Y.	19.5

APPROACH SLAB AT EB #2

BAR	NO.	SIZE	TYPE	LENGTH	WEIGHT
A1	13	#4	STR	31'-10"	276
A2	13	#4	STR	31'-10"	276
B1	64	#5	STR	11'-2"	745
B2	64	#6	STR	11'-8"	1121
EPOXY COATED REINFORCING STEEL				LBS.	2418
CLASS AA CONCRETE				C. Y.	18.4

TEMPORARY DRAINAGE DETAIL

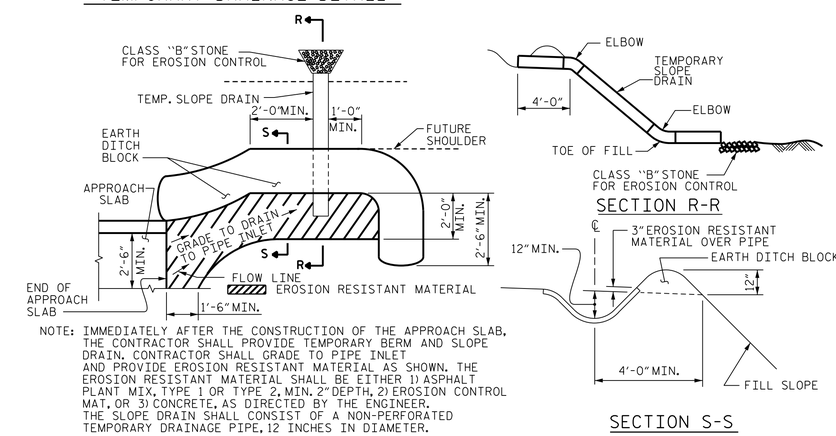

NOTE: IMMEDIATELY AFTER THE CONSTRUCTION OF THE APPROACH SLAB, THE CONTRACTOR SHALL PROVIDE TEMPORARY BERM AND SLOPE DRAIN. CONTRACTOR SHALL GRADE TO PIPE INLET AND PROVIDE EROSION RESISTANT MATERIAL AS SHOWN. THE EROSION RESISTANT MATERIAL SHALL BE EITHER 1) ASPHALT PLANT MIX, TYPE 1 OR TYPE 2, MIN. 2" DEPTH, 2) EROSION CONTROL MAT, OR 3) CONCRETE, AS DIRECTED BY THE ENGINEER. THE SLOPE DRAIN SHALL CONSIST OF A NON-PERFORATED TEMPORARY DRAINAGE PIPE, 12 INCHES IN DIAMETER.

PLAN VIEW

TEMPORARY BERM AND SLOPE DRAIN DETAILS

(TO BE USED WHEN SHOULDER BERM GUTTER IS REQUIRED)

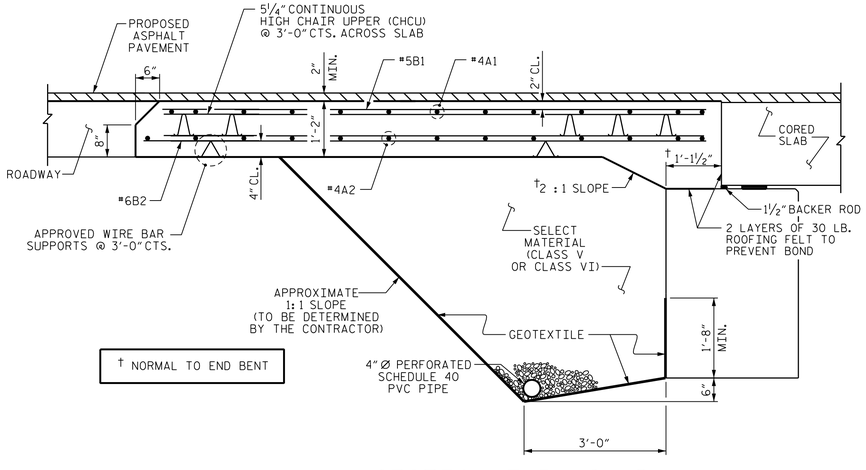

† NORMAL TO END BENT

SECTION THRU SLAB

(TYPE II - MODIFIED APPROACH FILL)

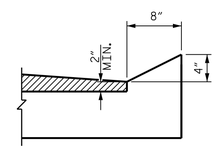

SECTION N-N

CURB DETAILS

PROJECT NO. B-5629

BRUNSWICK COUNTY

STATION: 14+21.00 -L-

SPLICE LENGTHS		
BAR SIZE	EPOXY COATED	UNCOATED
#4	1'-11"	1'-7"
#5	2'-5"	2'-0"
#6	3'-7"	2'-5"

NORTH CAROLINA PROFESSIONAL SEAL 29112 ENGINEER RICHARD L. COFFMAN

DocuSigned by: Richard Coffman 2/1/2023
7D4CF0F036E7414...

DOCUMENT NOT CONSIDERED FINAL UNLESS ALL SIGNATURES COMPLETED

LJB INC. (NC LICENSE C-4123)
1401 AVERSBORO ROAD
GARNER, NC 27529
(919) 594-6710 · LJB.COM
We think bigger.

STATE OF NORTH CAROLINA
DEPARTMENT OF TRANSPORTATION
RALEIGH

BRIDGE APPROACH SLAB FOR PRESTRESSED CONCRETE CORED SLAB UNIT (SUB-REGIONAL TIER) 90° SKEW

REVISIONS							SHEET NO.
NO.	BY:	DATE:	NO.	BY:	DATE:		SI-23
1			3				TOTAL SHEETS
2			4				23

DRAWN BY : MJM DATE : 5/9/2022
CHECKED BY : RLC DATE : 5/12/2022
ENGINEER OF RECORD : R. COFFMAN DATE : 2/2022

401_047_B5629_SMU_AS_023.dgn
1/24/2023 9:12:29 AM

STANDARD NOTES

DESIGN DATA:

SPECIFICATIONS	A.A.S.H.T.O. (CURRENT)
LIVE LOAD	SEE PLANS
IMPACT ALLOWANCE	SEE A.A.S.H.T.O.
STRESS IN EXTREME FIBER OF STRUCTURAL STEEL - AASHTO M270 GRADE 36	20,000 LBS. PER SQ. IN.
- AASHTO M270 GRADE 50W	27,000 LBS. PER SQ. IN.
- AASHTO M270 GRADE 50	27,000 LBS. PER SQ. IN.
REINFORCING STEEL IN TENSION - GRADE 60	24,000 LBS. PER SQ. IN.
CONCRETE IN COMPRESSION	1,200 LBS. PER SQ. IN.
CONCRETE IN SHEAR	SEE A.A.S.H.T.O.
STRUCTURAL TIMBER - TREATED OR UNTREATED EXTREME FIBER STRESS	1,800 LBS. PER SQ. IN.
COMPRESSION PERPENDICULAR TO GRAIN OF TIMBER	375 LBS. PER SQ. IN.
EQUIVALENT FLUID PRESSURE OF EARTH	30 LBS. PER CU. FT. (MINIMUM)

MATERIAL AND WORKMANSHIP:

EXCEPT AS MAY OTHERWISE BE SPECIFIED ON PLANS OR IN THE SPECIAL PROVISIONS, ALL MATERIAL AND WORKMANSHIP SHALL BE IN ACCORDANCE WITH THE 2018 "STANDARD SPECIFICATIONS FOR ROADS AND STRUCTURES" OF THE N. C. DEPARTMENT OF TRANSPORTATION.

STEEL SHEET PILING FOR PERMANENT OR TEMPORARY APPLICATIONS SHALL BE HOT ROLLED.

CONCRETE:

UNLESS OTHERWISE REQUIRED ON PLANS, CLASS A CONCRETE SHALL BE USED FOR ALL PORTIONS OF ALL STRUCTURES WITH THE EXCEPTION THAT: CLASS AA CONCRETE SHALL BE USED IN BRIDGE SUPERSTRUCTURES, ABUTMENT BACKWALLS, AND APPROACH SLABS; AND CLASS B CONCRETE SHALL BE USED FOR SLOPE PROTECTION AND RIP RAP.

CONCRETE CHAMFERS:

UNLESS OTHERWISE NOTED ON THE PLANS, ALL EXPOSED CORNERS ON STRUCTURES SHALL BE CHAMFERED ¾" WITH THE FOLLOWING EXCEPTIONS: TOP CORNERS OF CURBS MAY BE ROUNDED TO 1½" RADIUS WHICH IS BUILT INTO CURB FORMS; CORNERS OF TRANSVERSE FLOOR EXPANSION JOINTS SHALL BE ROUNDED WITH A ¼" FINISHING TOOL UNLESS OTHERWISE REQUIRED ON PLANS; AND CORNERS OF EXPANSION JOINTS IN THE ROADWAY FACES AND TOPS OF CURBS AND SIDEWALKS SHALL BE ROUNDED TO A ¼" RADIUS WITH A FINISHING STONE OR TOOL UNLESS OTHERWISE REQUIRED ON PLANS.

DOWELS:

DOWELS WHEN INDICATED ON PLANS AS FOR CULVERT EXTENSIONS, SHALL BE EMBEDDED AT LEAST 12" INTO THE OLD CONCRETE AND GROUTED INTO PLACE WITH 1:2 CEMENT MORTAR.

ALLOWANCE FOR DEAD LOAD DEFLECTION, SETTLEMENT, ETC. IN CASTING SUPERSTRUCTURES:

BRIDGES SHALL BE BUILT ON THE GRADE OR VERTICAL CURVE SHOWN ON PLANS. SLABS, CURBS AND PARAPETS SHALL CONFORM TO THE GRADE OR CURVE.

ALL DIMENSIONS WHICH ARE GIVEN IN SECTION AND ARE AFFECTED BY DEAD LOAD DEFLECTIONS ARE DIMENSIONS AT CENTER LINE OF BEARING UNLESS OTHERWISE NOTED ON PLANS. IN SETTING FORMS FOR STEEL BEAM BRIDGES AND PRESTRESSED CONCRETE GIRDER BRIDGES, ADJUSTMENTS SHALL BE MADE DUE TO THE DEAD LOAD DEFLECTIONS FOR THE ELEVATIONS SHOWN. WHERE BLOCKS ARE SHOWN OVER BEAMS FOR BUILDING UP TO THE SLAB, THE VERTICAL DIMENSIONS OF THE BLOCKS SHALL BE ADJUSTED BETWEEN BEARINGS TO COMPENSATE FOR DEAD LOAD DEFLECTIONS, VERTICAL CURVE ORDINATE, AND ACTUAL BEAM CAMBER. WHERE BOTTOM OF SLAB IS IN LINE WITH BOTTOM OF TOP FLANGES, DEPTH OF SLAB BETWEEN BEARINGS SHALL BE ADJUSTED TO COMPENSATE FOR DEAD LOAD DEFLECTION, VERTICAL CURVE ORDINATE, AND ACTUAL BEAM CAMBER.

IN SETTING FALSEWORK AND FORMS FOR REINFORCED CONCRETE SPANS, AN ALLOWANCE SHALL BE MADE FOR DEAD LOAD DEFLECTIONS, SETTLEMENT OF FALSEWORK, AND PERMANENT CAMBER WHICH SHALL BE PROVIDED FOR IN ADDITION TO THE ELEVATIONS SHOWN. AFTER REMOVAL OF THE FALSEWORK, THE FINISHED STRUCTURES SHALL CONFORM TO THE PROFILE AND ELEVATIONS SHOWN ON THE PLANS AND CONSTRUCTION ELEVATIONS FURNISHED BY THE ENGINEER.

DETAILED DRAWINGS FOR FALSEWORK OR FORMS FOR BRIDGE SUPERSTRUCTURE AND ANY STRUCTURE OR PARTS OF A STRUCTURE AS NOTED ON THE PLANS SHALL BE SUBMITTED TO THE ENGINEER FOR APPROVAL BEFORE CONSTRUCTION OF THE FALSEWORK OR FORMS IS STARTED.

REINFORCING STEEL:

ALL REINFORCING STEEL SHALL BE DEFORMED. DIMENSIONS RELATIVE TO PLACEMENT OF REINFORCING ARE TO CENTERS OF BARS UNLESS OTHERWISE INDICATED IN THE PLANS. DIMENSIONS ON BAR DETAILS ARE TO CENTERS OF BARS OR ARE OUT TO OUT AS INDICATED ON PLANS.

WIRE BAR SUPPORTS SHALL BE PROVIDED FOR REINFORCING STEEL WHERE INDICATED ON THE PLANS. WHEN BAR SUPPORT PIECES ARE PLACED IN CONTINUOUS LINES, THEY SHALL BE SO PLACED THAT THE ENDS OF THE SUPPORTING WIRES SHALL BE LAPPED TO LOCK LEGS ON ADJOINING PIECES.

STRUCTURAL STEEL:

AT THE CONTRACTOR'S OPTION, HE MAY SUBSTITUTE ⅞" Ø SHEAR STUDS FOR THE ¾" Ø STUDS SPECIFIED ON THE PLANS. THIS SUBSTITUTION SHALL BE MADE AT THE RATE OF 3 - ⅞" Ø STUDS FOR 4 - ¾" Ø STUDS, AND STUD SPACING CHANGES SHALL BE MADE AS NECESSARY TO PROVIDE THE SAME EQUIVALENT NUMBER OF ⅞" Ø STUDS ALONG THE BEAM AS SHOWN FOR ¾" Ø STUDS BASED ON THE RATIO OF 3 - ⅞" Ø STUDS FOR 4 - ¾" Ø STUDS. STUDS OF THE LENGTH SPECIFIED ON THE PLANS MUST BE PROVIDED. THE MAXIMUM SPACING SHALL BE 2'-0".

EXCEPT AT THE INTERIOR SUPPORTS OF CONTINUOUS BEAMS WHERE THE COVER PLATE IS IN CONTACT WITH BEARING PLATE, THE CONTRACTOR MAY, AT HIS OPTION, SUBSTITUTE FOR THE COVER PLATES DESIGNATED ON THE PLANS COVER PLATES OF THE EQUIVALENT AREA PROVIDED THESE PLATES ARE AT LEAST 5/16" IN THICKNESS AND DO NOT EXCEED A WIDTH EQUAL TO THE FLANGE WIDTH LESS 2" OR A THICKNESS EQUAL TO 2 TIMES THE FLANGE THICKNESS. THE SIZE OF FILLET WELDS SHALL CONFORM TO THE REQUIREMENTS OF THE CURRENT ANSI/AASHTO/AWS "BRIDGE WELDING CODE". ELECTROSLAG WELDING WILL NOT BE PERMITTED.

WITH THE SOLE EXCEPTION OF EDGES AT SURFACES WHICH BEAR ON OTHER SURFACES, ALL SHARP EDGES AND ENDS OF SHAPES AND PLATES SHALL BE SLIGHTLY ROUNDED BY SUITABLE MEANS TO A RADIUS OF APPROXIMATELY 1/16 INCH OR EQUIVALENT FLAT SURFACE AT A SUITABLE ANGLE PRIOR TO PAINTING, GALVANIZING, OR METALLIZING.

HANDRAILS AND POSTS:

METAL STANDARDS AND FACES OF THE CONCRETE END POSTS FOR THE METAL RAIL SHALL BE SET NORMAL TO THE GRADE OF THE CURB, UNLESS OTHERWISE SHOWN ON PLANS. THE METAL RAIL AND TOPS OF CONCRETE POSTS USED WITH THE ALUMINUM RAIL SHALL BE BUILT PARALLEL TO THE GRADE OF THE CURB.

METAL HANDRAILS SHALL BE IN ACCORDANCE WITH THE PLANS. RAILS SHALL BE AS MANUFACTURED FOR BRIDGE RAILING. CASTINGS SHALL BE OF A UNIFORM APPEARANCE. FINS AND OTHER DEFORMATIONS RESULTING FROM CASTING OR OTHERWISE SHALL BE REMOVED IN A MANNER SO THAT A UNIFORM COLORING OF THE COMPLETED CASTING SHALL BE OBTAINED. CASTINGS WITH DISCOLORATIONS OR OF NON-UNIFORM COLORING WILL NOT BE ACCEPTED. CERTIFIED MILL REPORTS ARE REQUIRED FOR METAL RAILS AND POSTS.

SPECIAL NOTES:

GENERALLY, IN CASE OF DISCREPANCY, THIS STANDARD SHEET OF NOTES SHALL GOVERN OVER THE SPECIFICATIONS, BUT THE REMAINDER OF THE PLANS SHALL GOVERN OVER NOTES HEREON, AND SPECIAL PROVISIONS SHALL GOVERN OVER ALL. SEE SPECIFICATIONS ARTICLE 105-4.

ENGLISH

JANUARY, 1990