STATE OF
NORTH CAROLINA
DEPT. OF TRANSPORTATION
DIVISION OF HIGHWAYS
RALEIGH, N.C.

ENGLISH DETAIL DRAWING FOR

MANHOLE AND VALVE BOX ADJUSTMENTS

SHEET 1 OF 1

840D55

GENERAL NOTES:

1. USE RAPID SET GROUT, MORTAR, OR CONCRETE THAT WILL TAKE FULL SET AND BECOME LOAD BEARING WITHIN SIXTY MINUTES OF PLACEMENT WITH A MINIMUM COMPRESSIVE STRENGTH OF 4000 PSI.
2. REMOVE ALL FAULTY EXISTING BRICKWORK AND REPLACE WITH NEW BRICK MASONRY.
3. SHEER CUT EXCAVATION FOR THE ADJUSTMENT ON ALL SIDES.
4. FILL AREA BELOW 8″ DEPTH WITH 78M OR NO. 57 CLEAN STONE.
5. MIX MORTAR TO NCDOT SPECIFICATIONS.
6. MORTAR JOINTS ½″ +/- ⅛″

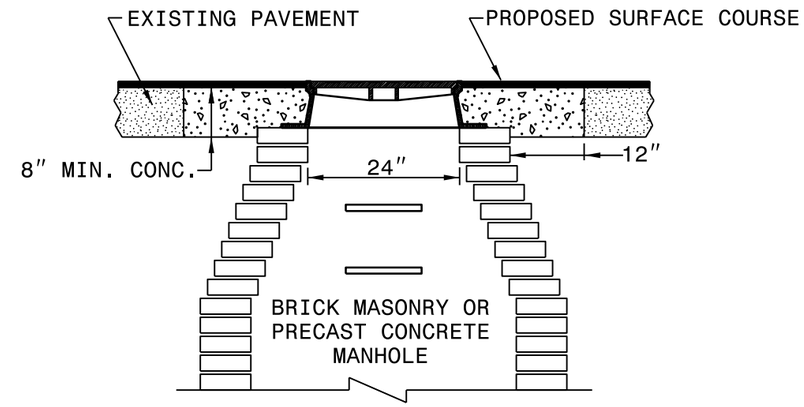

MANHOLE CONCRETE ENCASEMENT

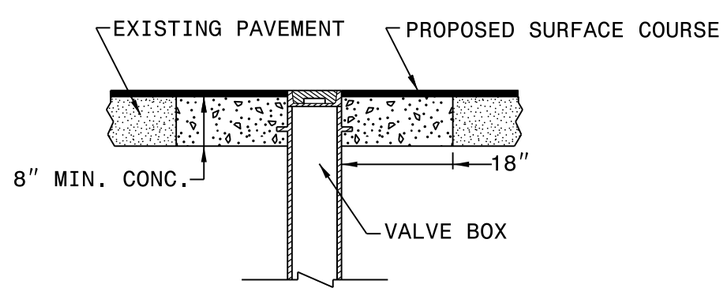

VALVE BOX CONCRETE ENCASEMENT

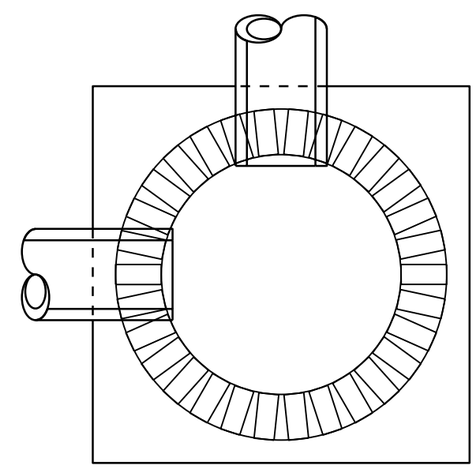

ELEVATION VIEW

PLACE BRICK ACCORDING TO ELEVATION VIEW

STATE OF
NORTH CAROLINA
DEPT. OF TRANSPORTATION
DIVISION OF HIGHWAYS
RALEIGH, N.C.

ENGLISH DETAIL DRAWING FOR

MANHOLE AND VALVE BOX ADJUSTMENTS

SHEET 1 OF 1

840D55

8/17/99
REVISIONS
19-AUG-2015 10:34
Q:\Proj\ROADWAY Data\2016 Resurfacing\Brunswick County\Raleigh Lat US 17 & Various Sec Rds\2016CPT03.09.10101 Rdy typ.dgn
$$$$USERNAME$$$$