DocuSign Envelope ID: 3902A11E-4764-4E81-9A8A-BEE0FC8E04F2

09/08/99

TIP PROJECT: B-4635

CONTRACT: DC00287

See Sheet 1A For Index of Sheets
See Sheet 1B for Conventional Symbols

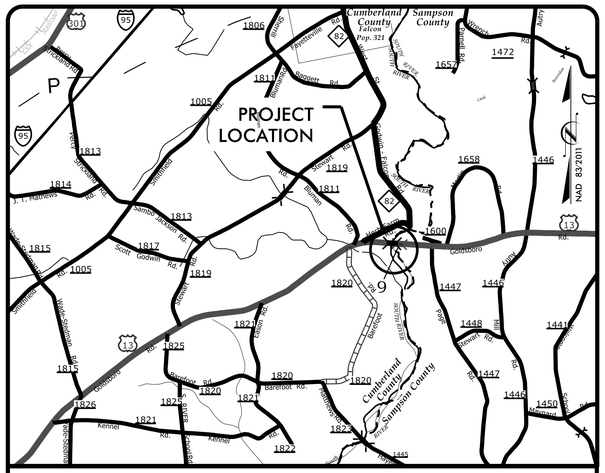

VICINITY MAP

STATE OF NORTH CAROLINA
DIVISION OF HIGHWAYS

SAMPSON COUNTY

LOCATION: REPLACE BRIDGE #9 OVER SOUTH RIVER OVERFLOW ON US 13

TYPE OF WORK: GRADING, DRAINAGE, PAVING AND STRUCTURE

STATE	STATE PROJECT REFERENCE NO.	SHEET NO.	TOTAL SHEETS
N.C.	B-4635	1	

STATE PROJ. NO.	F.A. PROJ. NO.	DESCRIPTION
38446.1.2		P.E.
38446.2.1		R/W
38446.3.1		CONST.

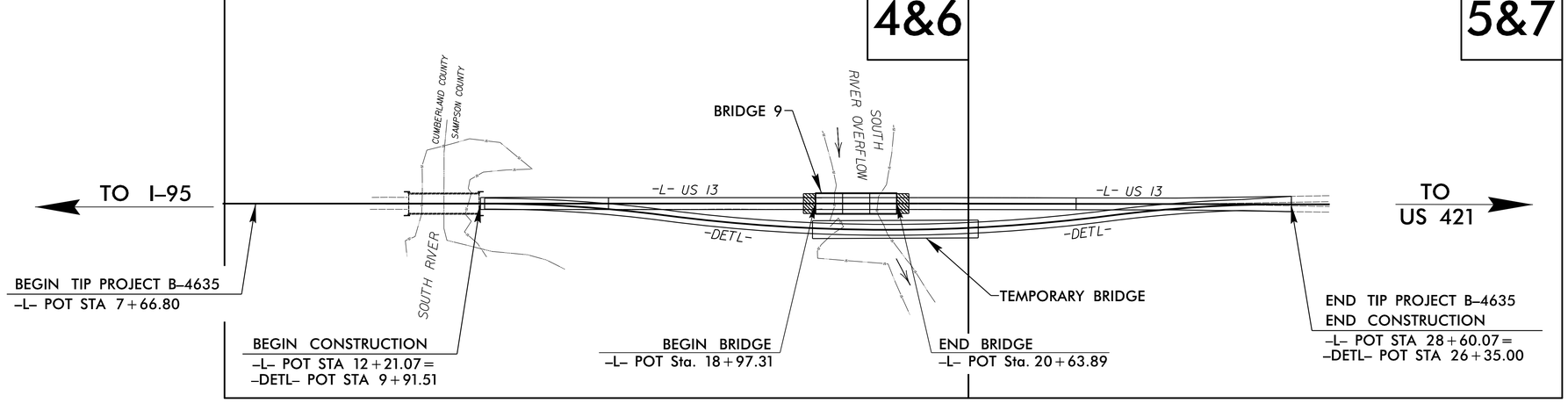

NCDOT CONTACT: DAVID STUTTS, PE

DOCUMENT NOT CONSIDERED FINAL UNLESS ALL SIGNATURES COMPLETED

GRAPHIC SCALES

50 25 0 50 100
PLANS

50 25 0 50 100
PROFILE (HORIZONTAL)

10 5 0 10 20
PROFILE (VERTICAL)

DESIGN DATA

ADT 2019 = 4,184
ADT 2039 = 6,104
K = 9 %
D = 60 %
T = 19 % *
V = 60 MPH
* TTST = 14% DUAL 5%
FUNC CLASS = MINOR ARTERIAL REGIONAL TIER

PROJECT LENGTH

LENGTH ROADWAY TIP PROJECT B-4635 = 0.364 MILES
LENGTH STRUCTURE TIP PROJECT B-4635 = 0.032 MILES

TOTAL LENGTH TIP PROJECT B-4635 = 0.396 MILES

PLANS PREPARED FOR NCDOT BY:

Dewberry
2610 WYCLIFF ROAD
SUITE 410
RALEIGH, NC 27607
PHONE: 919.881.9939
NC COA No. F-0929

2018 STANDARD SPECIFICATIONS

RIGHT OF WAY DATE: APRIL 3, 2019

LETTING DATE: APRIL 16, 2020

DENNIS J. MORY, P.E.
PROJECT ENGINEER

ANNE MARIE PRIETO, P.E.
PROJECT DESIGN ENGINEER

HYDRAULICS ENGINEER
2/28/2020
DocuSigned by: Steve Bondor
D1D8E151B5184C7...
SIGNATURE:
NORTH CAROLINA PROFESSIONAL SEAL 12786 ENGINEER STEVEN M. BONDOR P.E.

ROADWAY DESIGN ENGINEER
2/28/2020
DocuSigned by: Dennis J. Mory, PE
D5EC0F7B84FC4B8...
SIGNATURE:
NORTH CAROLINA PROFESSIONAL SEAL 020031 ENGINEER DENNIS J. MORY P.E.

STATE OF NORTH CAROLINA DEPARTMENT OF TRANSPORTATION

2/12/2020 8:06:46 AM
...\Roadway\Proj\B4635_RDY_TSH.dgn
USER: aprieto

8/17/99

Dewberry
2610 WYCLIFF ROAD
SUITE 410
RALEIGH, NC 27607
PHONE: 919.881.9939
NC CoA No. P-0929

PROJECT REFERENCE NO.	SHEET NO.
B–4635	1A

ROADWAY DESIGN ENGINEER

Digitally signed by Dennis J. Morey, PE
Date: 2020.03.04 16:53:17 -05'00'

SEAL
049018
ENGINEER
DENNIS J. MOREY
3/4/2020

DOCUMENT NOT CONSIDERED FINAL UNLESS ALL SIGNATURES COMPLETED

TIP B–4635

SHEET NUMBER	SHEET
1	TITLE SHEET
1A	INDEX OF SHEETS, GENERAL NOTES, AND STANDARD DRAWINGS
1B	CONVENTIONAL SYMBOLS
2A–1 THRU 2A–3	PAVEMENT SCHEDULE AND TYPICAL SECTIONS
2C–1	MODIFIED METHOD III CLEARING DETAIL
2G–1	GEOTEXTILE OF EMBANKMENT STABILIZATION DETAIL
2G–2	STANDARD TEMPORARY SHORING DETAIL
3B–1	ROADWAY SUMMARY TABLES
3D–1	DRAINAGE SUMMARY TABLE
3G–1	GEOTECH SUMMARY TABLES
4 THRU 9	PLAN AND PROFILES
RW02C–1 THRU RW02C–2	SURVEY CONTROL SHEETS
TMP–1 THRU TMP–13	TRAFFIC MANAGEMENT PLANS
PMP–1 THRU PMP–4	PAVEMENT MARKING PLANS
EC–1 THRU EC–11	EROSION CONTROL PLANS
UO–1 THRU UO–3	UTILITY BY OTHERS
X–0 THRU X–11	CROSS SECTIONS
S–1 THRU S–30	STRUCTURE PLANS

EFF. 01–16–2018
REV.

2018 ROADWAY ENGLISH STANDARD DRAWINGS

The following Roadway Standards as appear in "Roadway Standard Drawings" Highway Design Branch – N. C. Department of Transportation – Raleigh, N. C., Dated January, 2018 are applicable to this project and by reference hereby are considered a part of these plans:

STD.NO.	TITLE
DIVISION 2 – EARTHWORK	
225.02	Guide for Grading Subgrade – Secondary and Local
225.04	Method of Obtaining Superelevation – Two Lane Pavement
275.01	Rock Plating
DIVISION 3 – PIPE CULVERTS	
300.01	Method of Pipe Installation
DIVISION 4 – MAJOR STRUCTURES	
422.01	Bridge Approach Fills – Type I Standard Approach Fill
422.03	Reinforced Bridge Approach Fills – Type A Alternate Approach Fill for Integral Abutment
DIVISION 5 – SUBGRADE, BASES AND SHOULDERS	
560.01	Method of Shoulder Construction – High Side of Superelevated Curve – Method I
DIVISION 6 – ASPHALT BASES AND PAVEMENTS	
654.01	Pavement Repairs
DIVISION 8 – INCIDENTALS	
815.02	Subsurface Drain
840.00	Concrete Base Pad for Drainage Structures
840.25	Anchorage for Frames – Brick or Concrete or Precast
840.29	Frames and Narrow Slot Flat Grates
840.35	Traffic Bearing Grated Drop Inlet – for Cast Iron Double Frame and Grates
840.46	Traffic Bearing Precast Drainage Structure
840.66	Drainage Structure Steps
846.01	Concrete Curb, Gutter and Curb & Gutter
846.04	Drop Inlet Installation in Shoulder Berm Gutter
862.01	Guardrail Placement
862.02	Guardrail Installation
862.03	Structure Anchor Units
862.04	Anchoring End of Guardrail – B–77 and B–83 Anchor Units
876.02	Guide for Rip Rap at Pipe Outlets

GENERAL NOTES: 2018 SPECIFICATIONS

EFFECTIVE: 01–16–2018
REVISED:

GRADING AND SURFACING OR RESURFACING AND WIDENING:

THE GRADE LINES SHOWN DENOTE THE FINISHED ELEVATION OF THE PROPOSED SURFACING AT GRADE POINTS SHOWN ON THE TYPICAL SECTIONS. WHERE NO GRADE LINES ARE SHOWN, THE PROFILES SHOWN DENOTE THE TOP ELEVATION OF THE EXISTING PAVEMENT ALONG THE CENTER LINE OF SURVEY ON WHICH THE PROPOSED RESURFACING WILL BE PLACED. GRADE LINES MAY BE ADJUSTED BY THE ENGINEER IN ORDER TO SECURE A PROPER TIE–IN.

CLEARING:

CLEARING ON THIS PROJECT SHALL BE PERFORMED TO THE LIMITS ESTABLISHED BY MODIFIED METHOD III. SEE MODIFIED METHOD III CLEARING DETAIL SHEET 2C–1.

SUPERELEVATION:

ALL CURVES ON THIS PROJECT SHALL BE SUPERELEVATED IN ACCORDANCE WITH STD. NO. 225.04 USING THE RATE OF SUPERELEVATION AND RUNOFF SHOWN ON THE PLANS. SUPERELEVATION IS TO BE REVOLVED ABOUT THE GRADE POINTS SHOWN ON THE TYPICAL SECTIONS.

SHOULDER CONSTRUCTION:

ASPHALT, EARTH, AND CONCRETE SHOULDER CONSTRUCTION ON THE HIGH SIDE OF SUPERELEVATED CURVES SHALL BE IN ACCORDANCE WITH STD. NO. 560.01

SUBSURFACE DRAINS:

SUBSURFACE DRAINS SHALL BE CONSTRUCTED IN ACCORDANCE WITH STD. NO. 815.02 AT LOCATIONS DIRECTED BY THE ENGINEER.

GUARDRAIL:

THE GUARDRAIL LOCATIONS SHOWN ON THE PLANS MAY BE ADJUSTED DURING CONSTRUCTION AS DIRECTED BY THE ENGINEER. THE CONTRACTOR SHOULD CONSULT WITH THE ENGINEER PRIOR TO ORDERING GUARDRAIL MATERIAL.

TEMPORARY SHORING:

SHORING REQUIRED FOR THE MAINTENANCE OF TRAFFIC NOT SHOWN ON THE PLANS WILL BE PAID FOR AT THE CONTRACT PRICE FOR "TEMPORARY SHORING".

END BENTS:

THE ENGINEER SHALL CHECK THE STRUCTURE END BENT PLANS, DETAILS, AND CROSS–SECTION PRIOR TO SETTING OF THE SLOPE STAKES FOR THE EMBANKMENT OR EXCAVATION APPROACHING A BRIDGE.

UTILITIES:

UTILITY OWNERS ON THIS PROJECT ARE South River EMC

ANY RELOCATION OF EXISTING UTILITIES WILL BE ACCOMPLISHED BY OTHERS.

RIGHT–OF–WAY MARKERS:

ALL RIGHT–OF–WAY MARKERS ON THIS PROJECT SHALL BE PLACED BY OTHERS.

3/4/2020 4:16:53 PM
U:\Projects\B4635_RDY_PSH_1A.dgn
User:dpatel

DocuSign Envelope ID: 3902A11E-4764-4E81-9A8A-BEE0FC8E04F2

12/2/2016

PROJECT REFERENCE NO.	SHEET NO.
B-4635	1B

STATE OF NORTH CAROLINA, DIVISION OF HIGHWAYS

CONVENTIONAL PLAN SHEET SYMBOLS

Note: Not to Scale **S.U.E. = Subsurface Utility Engineering*

BOUNDARIES AND PROPERTY:

- State Line
- County Line
- Township Line
- City Line
- Reservation Line
- Property Line
- Existing Iron Pin (EIP)
- Computed Property Corner
- Property Monument (ECM)
- Parcel/Sequence Number (123)
- Existing Fence Line
- Proposed Woven Wire Fence
- Proposed Chain Link Fence
- Proposed Barbed Wire Fence
- Existing Wetland Boundary (WLB)
- Proposed Wetland Boundary (WLB)
- Existing Endangered Animal Boundary (EAB)
- Existing Endangered Plant Boundary (EPB)
- Existing Historic Property Boundary (HPB)
- Known Contamination Area: Soil (S)
- Potential Contamination Area: Soil (S)
- Known Contamination Area: Water (W)
- Potential Contamination Area: Water (W)
- Contaminated Site: Known or Potential

BUILDINGS AND OTHER CULTURE:

- Gas Pump Vent or U/G Tank Cap
- Sign (S)
- Well (W)
- Small Mine
- Foundation
- Area Outline
- Cemetery
- Building
- School
- Church
- Dam

HYDROLOGY:

- Stream or Body of Water
- Hydro, Pool or Reservoir
- Jurisdictional Stream (JS)
- Buffer Zone 1 (BZ 1)
- Buffer Zone 2 (BZ 2)
- Flow Arrow
- Disappearing Stream
- Spring
- Wetland
- Proposed Lateral, Tail, Head Ditch (FLOW)
- False Sump

RAILROADS:

- Standard Gauge (CSX TRANSPORTATION)
- RR Signal Milepost (MILEPOST 35)
- Switch (SWITCH)
- RR Abandoned
- RR Dismantled

RIGHT OF WAY & PROJECT CONTROL:

- Secondary Horiz and Vert Control Point
- Primary Horiz Control Point
- Primary Horiz and Vert Control Point
- Exist Permanent Easement Pin and Cap
- New Permanent Easement Pin and Cap
- Vertical Benchmark
- Existing Right of Way Marker
- Existing Right of Way Line
- New Right of Way Line (RW)
- New Right of Way Line with Pin and Cap (RW)
- New Right of Way Line with Concrete or Granite R/W Marker (RW)
- New Control of Access Line with Concrete C/A Marker (CA)
- Existing Control of Access (CA)
- New Control of Access (CA)
- Existing Easement Line (E)
- New Temporary Construction Easement (E)
- New Temporary Drainage Easement (TDE)
- New Permanent Drainage Easement (PDE)
- New Permanent Drainage / Utility Easement (DUE)
- New Permanent Utility Easement (PUE)
- New Temporary Utility Easement (TUE)
- New Aerial Utility Easement (AUE)

ROADS AND RELATED FEATURES:

- Existing Edge of Pavement
- Existing Curb
- Proposed Slope Stakes Cut (C)
- Proposed Slope Stakes Fill (F)
- Proposed Curb Ramp (CR)
- Existing Metal Guardrail
- Proposed Guardrail
- Existing Cable Guiderail
- Proposed Cable Guiderail
- Equality Symbol
- Pavement Removal

VEGETATION:

- Single Tree
- Single Shrub
- Hedge
- Woods Line
- Orchard
- Vineyard

EXISTING STRUCTURES:

MAJOR:

- Bridge, Tunnel or Box Culvert (CONC)
- Bridge Wing Wall, Head Wall and End Wall (CONC WW)

MINOR:

- Head and End Wall (CONC HW)
- Pipe Culvert
- Footbridge
- Drainage Box: Catch Basin, DI or JB (CB)
- Paved Ditch Gutter
- Storm Sewer Manhole (S)
- Storm Sewer (S)

UTILITIES:

POWER:

- Existing Power Pole
- Proposed Power Pole
- Existing Joint Use Pole
- Proposed Joint Use Pole
- Power Manhole (P)
- Power Line Tower
- Power Transformer
- U/G Power Cable Hand Hole
- H-Frame Pole
- U/G Power Line LOS B (S.U.E.*) (P)
- U/G Power Line LOS C (S.U.E.*) (P)
- U/G Power Line LOS D (S.U.E.*) (P)

TELEPHONE:

- Existing Telephone Pole
- Proposed Telephone Pole
- Telephone Manhole (T)
- Telephone Pedestal (T)
- Telephone Cell Tower
- U/G Telephone Cable Hand Hole (HH)
- U/G Telephone Cable LOS B (S.U.E.*) (T)
- U/G Telephone Cable LOS C (S.U.E.*) (T)
- U/G Telephone Cable LOS D (S.U.E.*) (T)
- U/G Telephone Conduit LOS B (S.U.E.*) (TC)
- U/G Telephone Conduit LOS C (S.U.E.*) (TC)
- U/G Telephone Conduit LOS D (S.U.E.*) (TC)
- U/G Fiber Optics Cable LOS B (S.U.E.*) (T FO)
- U/G Fiber Optics Cable LOS C (S.U.E.*) (T FO)
- U/G Fiber Optics Cable LOS D (S.U.E.*) (T FO)

WATER:

- Water Manhole (W)
- Water Meter
- Water Valve
- Water Hydrant
- U/G Water Line LOS B (S.U.E*) (W)
- U/G Water Line LOS C (S.U.E*) (W)
- U/G Water Line LOS D (S.U.E*) (W)
- Above Ground Water Line (A/G Water)

TV:

- TV Pedestal (C)
- TV Tower
- U/G TV Cable Hand Hole (HH)
- U/G TV Cable LOS B (S.U.E.*) (TV)
- U/G TV Cable LOS C (S.U.E.*) (TV)
- U/G TV Cable LOS D (S.U.E.*) (TV)
- U/G Fiber Optic Cable LOS B (S.U.E.*) (TV FO)
- U/G Fiber Optic Cable LOS C (S.U.E.*) (TV FO)
- U/G Fiber Optic Cable LOS D (S.U.E.*) (TV FO)

GAS:

- Gas Valve
- Gas Meter
- U/G Gas Line LOS B (S.U.E.*) (G)
- U/G Gas Line LOS C (S.U.E.*) (G)
- U/G Gas Line LOS D (S.U.E.*) (G)
- Above Ground Gas Line (A/G Gas)

SANITARY SEWER:

- Sanitary Sewer Manhole
- Sanitary Sewer Cleanout
- U/G Sanitary Sewer Line (SS)
- Above Ground Sanitary Sewer (A/G Sanitary Sewer)
- SS Forced Main Line LOS B (S.U.E.*) (FSS)
- SS Forced Main Line LOS C (S.U.E.*) (FSS)
- SS Forced Main Line LOS D (S.U.E.*) (FSS)

MISCELLANEOUS:

- Utility Pole
- Utility Pole with Base
- Utility Located Object
- Utility Traffic Signal Box (S)
- Utility Unknown U/G Line LOS B (S.U.E.*) (?UTL)
- U/G Tank; Water, Gas, Oil
- Underground Storage Tank, Approx. Loc. (UST)
- A/G Tank; Water, Gas, Oil
- Geoenvironmental Boring
- U/G Test Hole LOS A (S.U.E.*)
- Abandoned According to Utility Records (AATUR)
- End of Information (E.O.I.)

DocuSign Envelope ID: 3902A11E-4764-4E81-9A8A-BEE0FC8E04F2

6/2/93

FINAL PAVEMENT SCHEDULE

ITEM	DESCRIPTION	ITEM	DESCRIPTION	ITEM	DESCRIPTION
C1	PROP. APPROX. 1.5" ASPHALT CONCRETE SURFACE COURSE, TYPE S9.5B, AT AN AVERAGE RATE OF 165 LBS. PER SQ. YARD	E1	PROP. APPROX. 4" ASPHALT CONCRETE BASE COURSE, TYPE B25.0C, AT AN AVERAGE RATE OF 456 LBS. PER SQ. YARD.	T	EARTH MATERIAL
C2	PROP. APPROX. 3" ASPHALT CONC. SURFACE COURSE, TYPE S9.5B, AT AN AVERAGE RATE OF 165 LBS. PER SQ. YARD IN EACH OF TWO LAYERS.	E2	PROP. VAR. DEPTH ASPHALT CONCRETE BASE COURSE, TYPE B25.0C, AT AN AVERAGE RATE OF 114 LBS. PER. SQ. YARD PER 1" IN DEPTH, TO BE PLACED IN LAYERS NOT LESS THAN 3" IN DEPTH OR GREATER THAN 5.5" IN DEPTH.	U	EXISTING PAVEMENT
C3	PROP. VAR. DEPTH ASPHALT CONCRETE SURFACE COURSE, TYPE S9.5B, AT AN AVERAGE RATE OF 110 LBS. PER. SQ. YARD PER 1" IN DEPTH, TO BE PLACED IN LAYERS NOT LESS THAN 1" IN DEPTH OR GREATER THAN 1.5" IN DEPTH.	J1	PROP. 8" AGGREGATE BASE COURSE	V1	MILLING (SEE MILLING DETAIL ON PLAN SHEET 2A–1)
D1	PROP. APPROX. 4" ASPHALT CONCRETE INTERMEDIATE COURSE, TYPE I19.0C, AT AN AVERAGE RATE OF 456 LBS. PER SQ. YARD.	P1	PRIME COAT AT THE RATE OF .35 GAL. PER SQ. YARD	V2	MILLING, 1.5" DEPTH
D2	PROP. VAR. DEPTH ASPHALT CONCRETE INTERMEDIATE COURSE, TYPE I19.0C, AT AN AVERAGE RATE OF 114 LBS. PER. SQ. YARD PER 1" IN DEPTH, TO BE PLACED IN LAYERS NOT LESS THAN 2.5" IN DEPTH OR GREATER THAN 4" IN DEPTH.	R1	SHOULDER BERM GUTTER (SBG)	W	WEDGING (SEE WEDGE DETAIL ON PLAN SHEET 2A–1)

PROJECT REFERENCE NO.	SHEET NO.
B–4635	2A–1

ROADWAY DESIGN ENGINEER

NORTH CAROLINA PROFESSIONAL SEAL 032807 ENGINEER DAVID J. MORY

DocuSigned by: David Mory PE

2/28/2020

PAVEMENT DESIGN ENGINEER

NORTH CAROLINA PROFESSIONAL SEAL 042886 ENGINEER MARK S. MORRISON

DocuSigned by: Mark Morrison

2/28/2020

DOCUMENT NOT CONSIDERED FINAL UNLESS ALL SIGNATURES COMPLETED

Dewberry
2610 WYCLIFF ROAD
SUITE 410
RALEIGH, NC 27607
PHONE: 919.881.9929
NC COA No. P-0609

NC DEPARTMENT OF TRANSPORTATION
PAVEMENT MANAGEMENT UNIT
1593 MAIL SERVICE CENTER
RALEIGH, NC 27699–1593

NOTE: PAVEMENT EDGES ARE 1:1 UNLESS OTHERWISE NOTED.

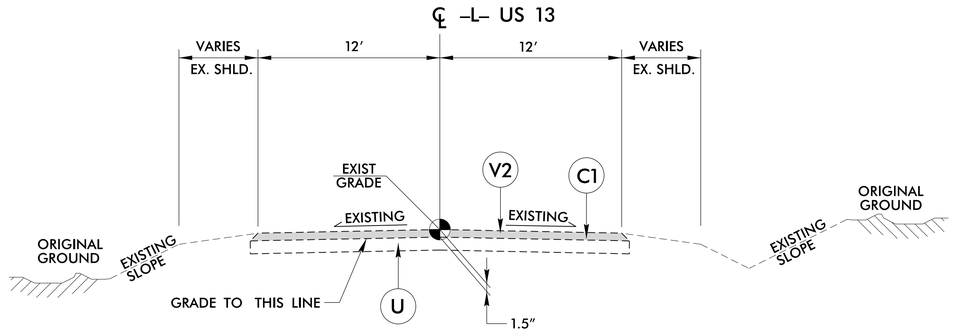

TYPICAL SECTION NO. 1

–L– STA. 12+21.07 TO STA. 14+80.00
–L– STA. 24+25.00 TO STA. 28+60.07

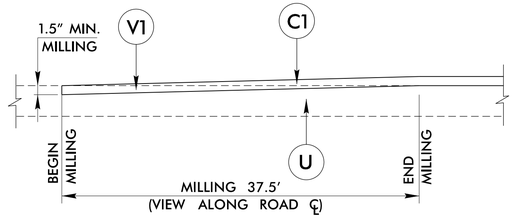

MILLING DETAIL –V1–

–L– STA. 14+80.00 TO STA. 15+17.50
–L– STA. 23+87.50 TO STA. 24+25.00

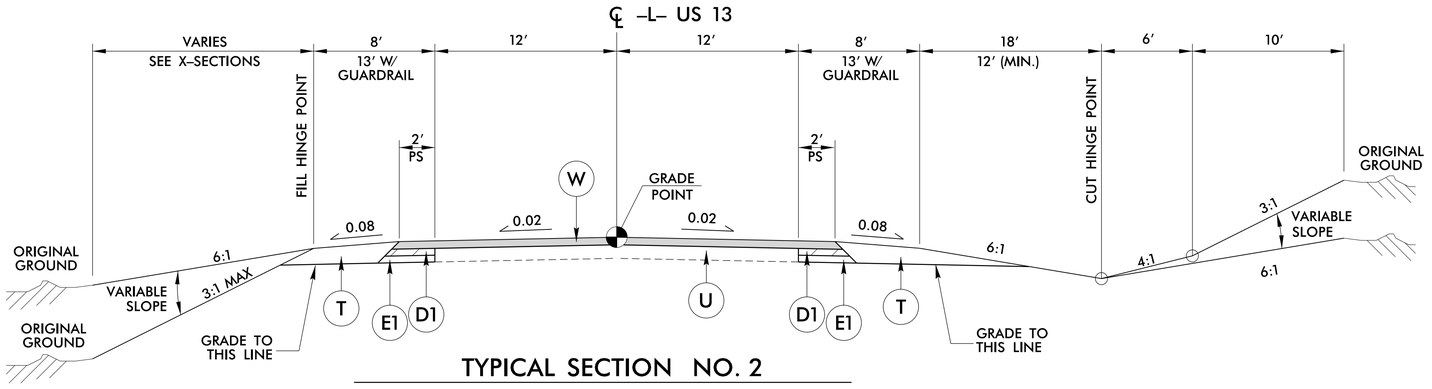

TYPICAL SECTION NO. 2

–L– STA. 14+80.00 TO STA. 17+50.00
–L– STA. 22+50.00 TO STA. 24+25.00

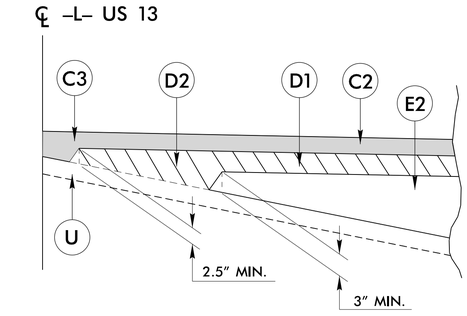

WEDGING DETAIL – W

2/12/2020 8:06:54 AM
USER: dmory
FILE: 2A-1.dgn

DocuSign Envelope ID: 3902A11E-4764-4E81-9A8A-BEE0FC8E04F2

FINAL PAVEMENT SCHEDULE

ITEM	DESCRIPTION	ITEM	DESCRIPTION	ITEM	DESCRIPTION	ITEM	DESCRIPTION	ITEM	DESCRIPTION	ITEM	DESCRIPTION
C1	1.5" S9.5B	D1	4" I19.0C	E2	VAR. DEPTH B25.0C	R1	SBG	V1	MILLING		
C2	3" S9.5B	D2	VAR. DEPTH I19.0C	J1	8" AGGREGATE BASE COURSE	T	EARTH MATERIAL	V2	MILLING, 1.5" DEPTH		
C3	VAR. DEPTH S9.5B	E1	4" B25.0C	P1	PRIME COAT	U	EXIST. PAVEMENT	W	WEDGING		

NOTE: PAVEMENT EDGES ARE 1:1 UNLESS OTHERWISE NOTED.

PROJECT REFERENCE NO.	SHEET NO.
B-4635	2A-2

ROADWAY DESIGN ENGINEER

NORTH CAROLINA PROFESSIONAL SEAL 032886 ENGINEER DENNIS J MORY

DocuSigned by: Dennis Mory, PE

2/28/2020

PAVEMENT DESIGN ENGINEER

NORTH CAROLINA PROFESSIONAL SEAL 032886 ENGINEER MARK S MORRISON

DocuSigned by: Mark Morrison

2/28/2020

DOCUMENT NOT CONSIDERED FINAL UNLESS ALL SIGNATURES COMPLETED

Dewberry
2610 WYCLIFF ROAD
SUITE 410
RALEIGH, NC 27607
PHONE: 919.881.9939
NC COA No. P-0929

NC DEPARTMENT OF TRANSPORTATION
PAVEMENT MANAGEMENT UNIT
1593 MAIL SERVICE CENTER
RALEIGH, NC 27699-1593

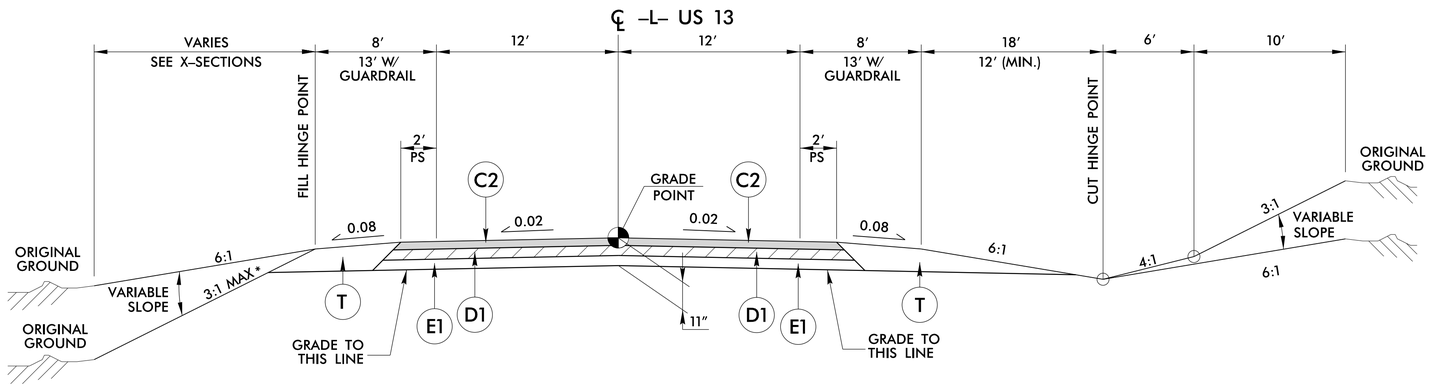

*2:1 MAX SLOPE ROCK PLATING FROM
STA. 18+25.00 LT TO STA. 18+97.31 LT
STA. 20+63.89 LT TO STA. 21+25.00 LT

SEE STANDARD ROADWAY DRAWING 275.01, DETAIL NO. 2 FOR ROCK PLATING DETAILS.

TYPICAL SECTION NO. 3

–L– STA. 17+50.00 TO STA. 18+97.31 (BEGIN BRIDGE)
–L– STA. 20+63.89 (END BRIDGE) TO STA. 22+50.00

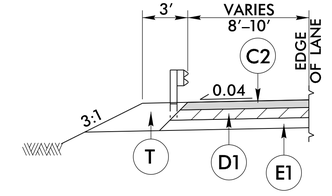

DETAIL FOR PLACEMENT OF GUARDRAIL

USE IN CONJUNCTION WITH ALL TYPICAL SECTIONS

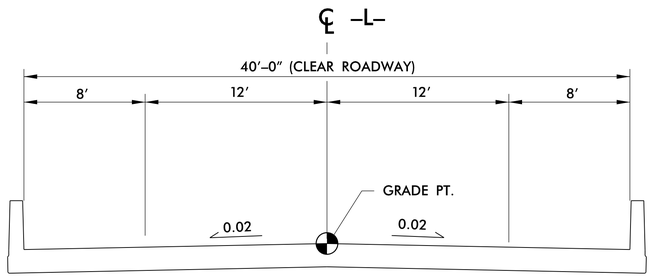

TYPICAL SECTION NO. 4 (BRIDGE NO. 9)

–L– STA. 18+97.31 (BEGIN BRIDGE) TO STA. 20+63.89 (END BRIDGE)

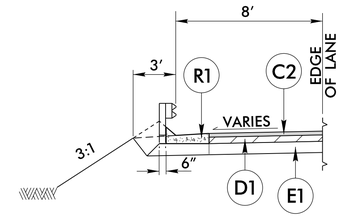

DETAIL FOR SHOULDER BERM GUTTER

USE IN CONJUNCTION WITH –L– TYPICAL SECTIONS

2/12/2020 8:06:57 AM
USER: dmorris
6/2/93

DocuSign Envelope ID: 3902A11E-4764-4E81-9A8A-BEE0FC8E04F2

FINAL PAVEMENT SCHEDULE

ITEM	DESCRIPTION	ITEM	DESCRIPTION	ITEM	DESCRIPTION	ITEM	DESCRIPTION	ITEM	DESCRIPTION	ITEM	DESCRIPTION
C1	1.5″ S9.5B	D1	4″ I19.0C	E2	VAR. DEPTH B25.0C	R1	SBG	V1	MILLING		
C2	3″ S9.5B	D2	VAR. DEPTH I19.0C	J1	8″ AGGREGATE BASE COURSE	T	EARTH MATERIAL	V2	MILLING, 1.5″ DEPTH		
C3	VAR. DEPTH S9.5B	E1	4″ B25.0C	P1	PRIME COAT	U	EXIST. PAVEMENT	W	WEDGING		

NOTE: PAVEMENT EDGES ARE 1:1 UNLESS OTHERWISE NOTED.

PROJECT REFERENCE NO.	SHEET NO.
B–4635	2A–3

ROADWAY DESIGN ENGINEER

NORTH CAROLINA PROFESSIONAL SEAL 042070 ENGINEER DAVID J. MORY

Docusigned by: David Mory

2/28/2020

PAVEMENT DESIGN ENGINEER

NORTH CAROLINA PROFESSIONAL SEAL 042870 ENGINEER MARK S. MORRISON

Docusigned by: Mark S. Morrison

2/28/2020

DOCUMENT NOT CONSIDERED FINAL UNLESS ALL SIGNATURES COMPLETED

Dewberry
2610 WYCLIFF ROAD
SUITE 410
RALEIGH, NC 27607
PHONE: 919.881.9939
NC COA No. P-0929

NC DEPARTMENT OF TRANSPORTATION
PAVEMENT MANAGEMENT UNIT
1593 MAIL SERVICE CENTER
RALEIGH, NC 27699-1593

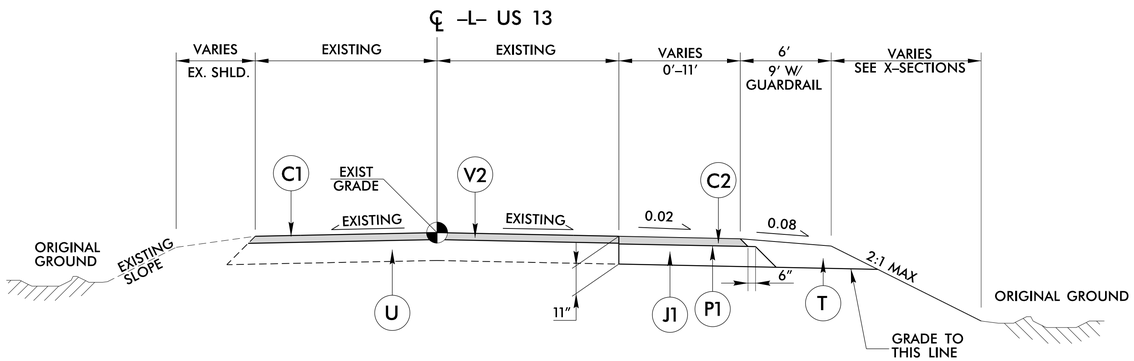

TYPICAL SECTION NO. 5

–DETL– STA. 10+00.00 TO STA. 12+56.87
–DETL– STA. 23+74.08 TO STA. 26+35.00

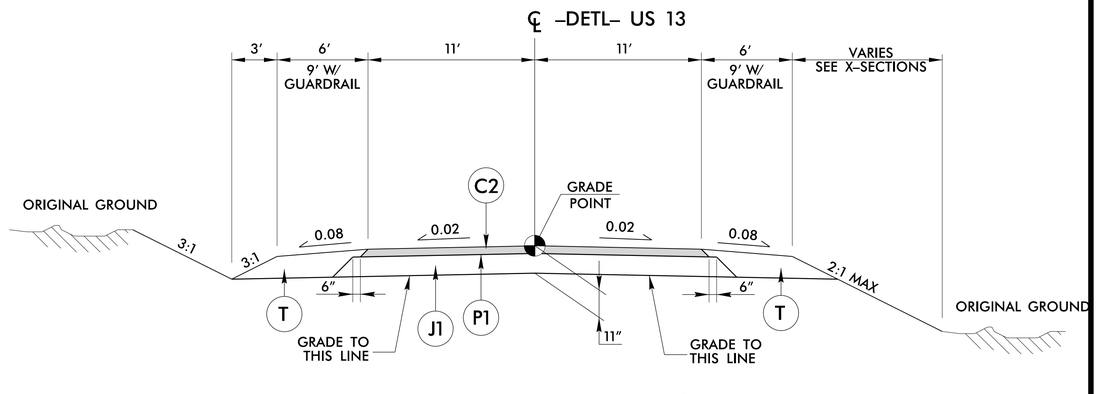

TYPICAL SECTION NO. 6

–DETL– STA. 12+56.87 TO STA. 16+64.88 (BEGIN BRIDGE)
–DETL– STA. 20+00.00 (END BRIDGE) TO STA. 23+74.08

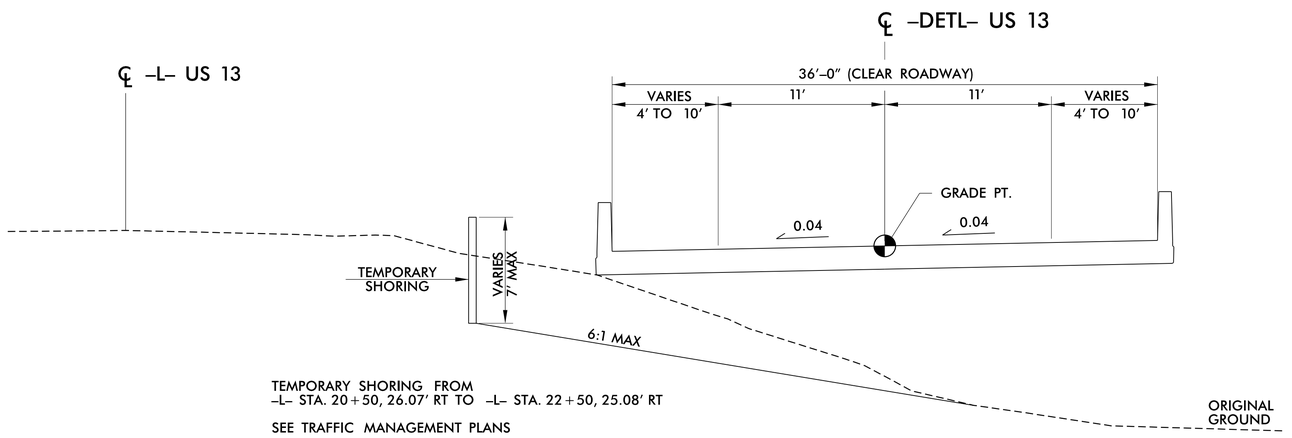

TEMPORARY SHORING FROM
–L– STA. 20+50, 26.07′ RT TO –L– STA. 22+50, 25.08′ RT

SEE TRAFFIC MANAGEMENT PLANS

SEE GEOTECHNICAL STANDARD DETAIL 1801.01

TYPICAL SECTION NO. 7

–DETL– STA. 16+64.88 (BEGIN BRIDGE) TO STA. 20+00.00 (END BRIDGE)

6/2/93
2/12/2020 8:06:58 AM
C:\Projects\B-4635\RDWY\TYP 024-3.dgn
USER: dpatel

DocuSign Envelope ID: 3902A11E-4764-4E81-9A8A-BEE0FC8E04F2

5/14/99

PROJECT REFERENCE NO.	SHEET NO.
B-4635	2C-1

STATE OF
NORTH CAROLINA
DEPT. OF TRANSPORTATION
DIVISION OF HIGHWAYS
RALEIGH, N.C.

ENGLISH DETAIL DRAWING FOR

METHOD OF CLEARING

MODIFIED METHOD - III

SHEET 1 OF 1

200D03

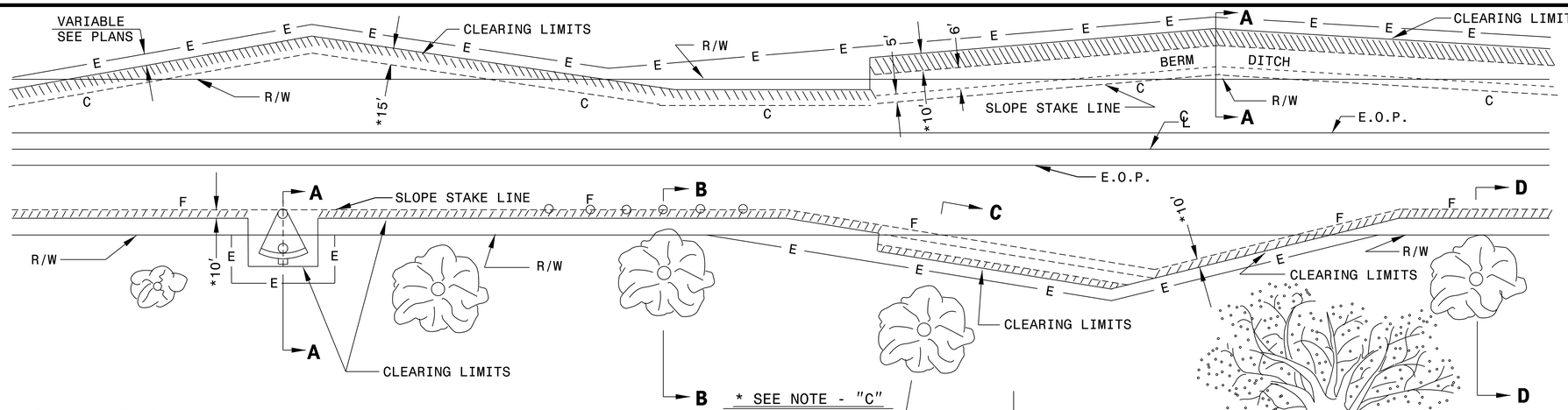

GENERAL NOTES:

1. REMOVE TREES OUTSIDE THE CLEARING LIMIT WHEN, IN THE OPINION OF THE ENGINEER, THE UTILITY OF A TREE WILL BE DESTROYED BY THE CONSTRUCTION OR THE CLEARING OPERATION.
2. CLEAR IN ACCORDANCE WITH THIS STANDARD EXCEPT WHERE ADDITIONAL CLEARING IS REQUIRED FOR SAFETY AS SHOWN ON THE PLANS.

METHOD III CLEARING LIMITS

(A) CUTS -- CLEAR TO CONSTRUCTION LIMITS.
(B) FILLS - CLEAR TO 5′/10′ * BEYOND CONSTRUCTION LIMITS, UNLESS SPECIFIED OTHERWISE BY WETLAND PERMIT.
(C) CUTS AND FILLS - WHEN THE CLEARING LIMITS (A AND B) EXCEED THE PROPOSED R/W OR PROPOSED CONSTRUCTION EASEMENTS, THEN CLEAR ONLY TO THE R/W OR CONSTRUCTION EASEMENT WHICHEVER IS GREATER.

* FOR FILL HEIGHTS LESS THAN 10′ CLEAR TO 5′ BEYOND CONSTRUCTION LIMITS.
* FOR FILL HEIGHTS 10′ OR GREATER CLEAR TO 10′ BEYOND CONSTRUCTION LIMITS.
** PLACE SILT FENCE AT 5′ BEYOND TOE OF SLOPE IN FILL SECTIONS WITH LESS THAN 10′. PLACE SILT FENCE AT 10′ BEYOND TOE OF SLOPE IN FILL SECTIONS WITH 10′ OR GREATER.

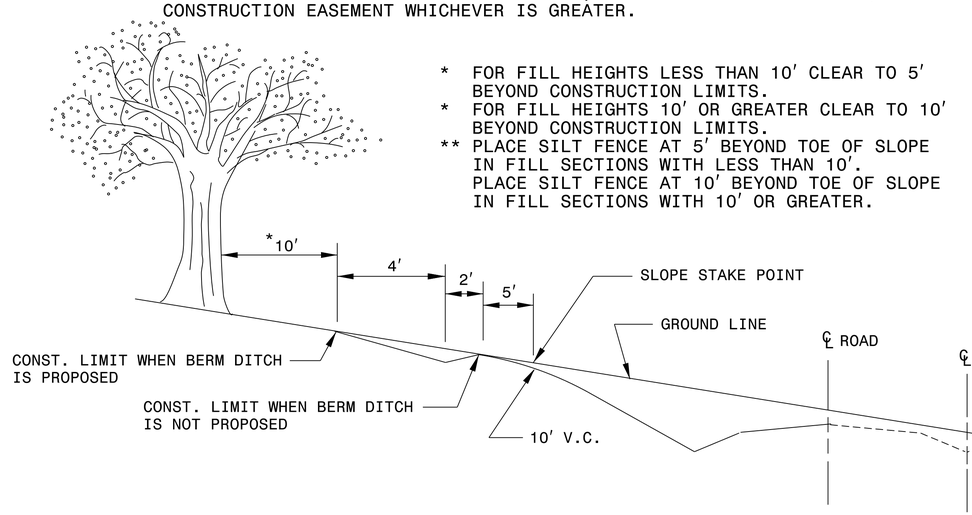

SECTION A-A

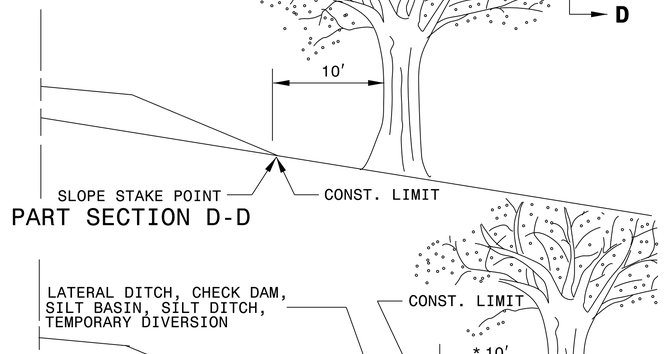

PART SECTION D-D

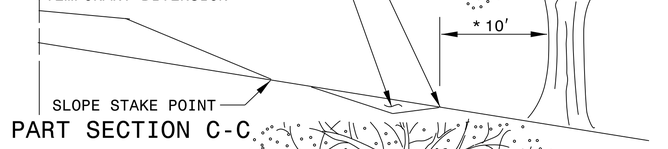

PART SECTION C-C

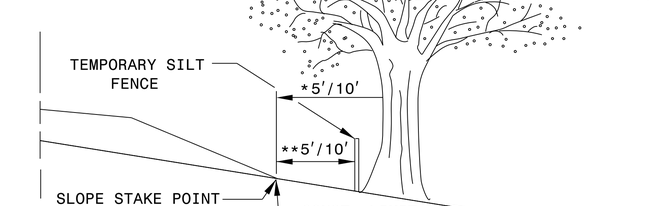

PART SECTION B-B

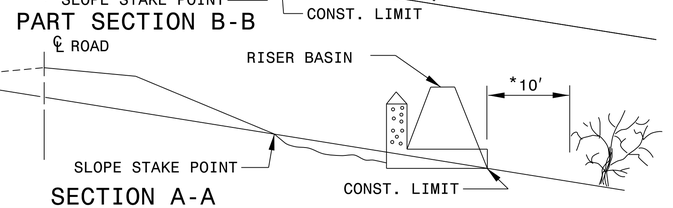

STATE OF
NORTH CAROLINA
DEPT. OF TRANSPORTATION
DIVISION OF HIGHWAYS
RALEIGH, N.C.

ENGLISH DETAIL DRAWING FOR

METHOD OF CLEARING

MODIFIED METHOD - III

SHEET 1 OF 1

200D03

2/28/2020

DOCUMENT NOT CONSIDERED FINAL UNLESS ALL SIGNATURES COMPLETED

CONTRACT STANDARDS AND DEVELOPMENT UNIT
Office 919-707-6950 FAX 919-250-4119

SEE TITLE BLOCK

ORIGINAL BY:	T.S.S.	DATE:	FEB.2000
MODIFIED BY:	K.A.K.	DATE:	AUG.2016
CHECKED BY:		DATE:	
FILE SPEC.:	kkempf/english/0200d301.dgn		

2/12/2020 8:07:01 AM
...\Modified Method III Clearing.dgn
USER: aprieto

DocuSign Envelope ID: 3902A11E-4764-4E81-9A8A-BEE0FC8E04F2

PROJECT REFERENCE NO.	SHEET NO.
B-4635	2G-1

GEOTECHNICAL ENGINEER

NORTH CAROLINA PROFESSIONAL SEAL 032171 ENGINEER JINYOUNG PARK

DocuSigned by: A713D85CE1B4D0... 1/3/2019 SIGNATURE DATE

ENGINEER

SIGNATURE DATE

DOCUMENT NOT CONSIDERED FINAL UNLESS ALL SIGNATURES COMPLETED

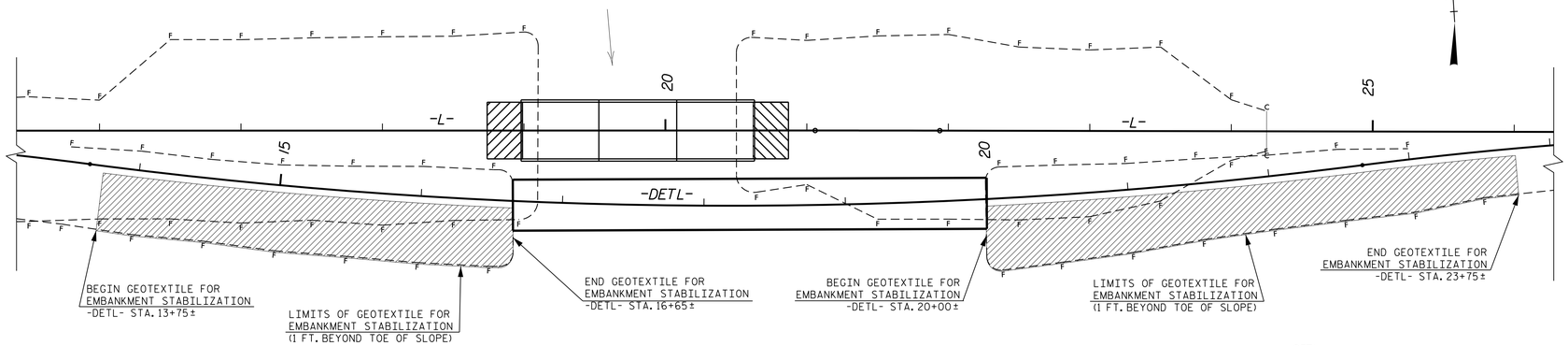

AREA OF GEOTEXTILE FOR EMBANKMENT STABILIZATION, MACHINE OR ROLL DIRECTION PERPENDICULAR TO EMBANKMENT CENTERLINE

-DETL-

PI Sta 11+82.63	PI Sta 18+18.21
Δ = 7° 26' 13.1" (RT)	Δ = 14° 45' 52.5" (LT)
D = 2° 02' 20.4"	D = 1° 38' 13.3"
L = 364.74'	L = 901.92'
T = 182.63'	T = 453.47'
R = 2,810.00'	R = 3,500.00'
Se = 0.04	Se = 0.04

-DETL-

PI Sta 18+18.21	PI Sta 24+49.69
Δ = 14° 45' 52.5" (LT)	Δ = 7° 27' 12.6" (RT)
D = 1° 38' 13.3"	D = 2° 02' 20.4"
L = 901.92'	L = 365.55'
T = 453.47'	T = 183.03'
R = 3,500.00'	R = 2,810.00'
Se = 0.04	Se = 0.04

TYPICAL CROSS SECTION

N.T.S.

GEOTEXTILE OVERLAP DETAIL

(PLAN VIEW, N.T.S.)

NOTES

1. DO NOT GRUB, ONLY CLEAR THE AREA WITHIN THE LIMITS OF THE GEOTEXTILE FOR EMBANKMENT STABILIZATION.
2. PLACE GEOTEXTILE FOR EMBANKMENT STABILIZATION PERPENDICULAR TO EMBANKMENT CENTERLINE ON THE SLOPE OF -L- ALIGNMENT AS SHOWN IN THE PLAN OR AS DIRECTED BY THE ENGINEER.
3. PLACE THE GEOTEXTILE WITHOUT ANY WRINKLES OR CREASES.
4. NO SEAMS OR JOINTS ARE ALLOWED IN THE MACHINE DIRECTION OF GEOTEXTILE.
6. THE TERMS ROLL AND MACHINE DIRECTION ARE USED INTERCHANGEABLY.
7. ALL JOINTS IN THE CROSS MACHINE DIRECTION MUST BE OVERLAPPED A MINMUM OF 24 INCHES.
8. FOR GEOTEXTILE FOR EMBANKMENT STABILIZATION , SEE GEOTEXTILE FOR EMBANKMENT STABILIZATION SPECIAL PROVISION.

QUANTITIES

GEOTEXTILE FOR EMBANKMENT STABILIZATION	3,000 SY*

PREPARED BY: J. PARK	DATE: 12/2018
REVIEWED BY: J. BATTS	DATE: 12/2018

NORTH CAROLINA DEPARTMENT OF TRANSPORTATION DIVISION OF HIGHWAYS

GEOTECHNICAL ENGINEERING UNIT

GEOTEXTILE FOR EMBANKMENT STABILIZATION DETAILS

REVISIONS

NO.	BY	DATE	NO.	BY	DATE
1			3		
2			4		

DocuSign Envelope ID: 3902A11E-4764-4E81-9A8A-BEE0FC8E04F2

PROJECT REFERENCE NO.	SHEET NO.
B-4635	2G-2

GEOTECHNICAL ENGINEER

NORTH CAROLINA PROFESSIONAL SEAL 022246 ENGINEER SCOTT A. HIDDEN

DocuSigned by: Scott A. Hidden 9/30/2019
F760CAEB66FC4D3...
SIGNATURE DATE

ENGINEER

SIGNATURE DATE

DOCUMENT NOT CONSIDERED FINAL UNLESS ALL SIGNATURES COMPLETED

GROUNDWATER CONDITION (SEE NOTE 6)	H SHORING HEIGHT (FT)	SLOPE OR SURCHARGE CASE WITH NO TRAFFIC IMPACT					SURCHARGE CASE WITH TRAFFIC IMPACT				
		SHEET PILES		H-PILES WITH TIMBER LAGGING			SHEET PILES		H-PILES WITH TIMBER LAGGING		
		MINIMUM REQUIRED EMBEDMENT (FT)	MINIMUM REQUIRED SECTION MODULUS (IN^3/FT)	MINIMUM REQUIRED EMBEDMENT* (FT) (SEE NOTE 10)			MINIMUM REQUIRED EMBEDMENT (FT)	MINIMUM REQUIRED SECTION MODULUS (IN^3/FT)	MINIMUM REQUIRED EMBEDMENT* (FT) (SEE NOTE 10)		
				HP 10x42	HP 12x53	HP 14x73			HP 10x42	HP 12x53	HP 14x73
GROUNDWATER ELEVATION BEWTEEN BOTTOM OF SHORING AND PILE TIP	< 6	11.5	4.5	11.5	11.5	11.5	16.0	12.0	13.0	13.0	13.0
	7	13.0	7.0	13.0	13.0	13.0	17.0	14.5	14.5	14.5	14.5
	8	15.0	10.0	--	15.0	15.0	18.0	17.0	--	15.5	15.5
	9	17.0	14.0	--	17.0	17.0	19.0	20.0	--	17.0	17.0
	10	18.5	19.5	--	--	18.5	20.0	23.5	--	--	18.5
	11	20.5	26.0	--	--	--	21.0	28.0	--	--	20.0
	12	22.5	33.0	--	--	--	22.0	33.0	--	--	21.5
GROUNDWATER ELEVATION BELOW PILE TIP	< 6	7.5	3.0	8.0	8.0	8.0	11.0	10.0	9.5	9.5	9.5
	7	8.5	4.5	9.5	9.5	9.5	12.0	12.0	10.5	10.5	10.5
	8	10.0	6.5	10.5	10.5	10.5	12.5	14.0	11.5	11.5	11.5
	9	11.0	9.5	--	12.0	12.0	13.5	16.5	--	12.5	12.5
	10	12.5	13.0	--	--	13.5	14.0	19.5	--	13.5	13.5
	11	13.5	17.0	--	--	14.5	15.0	22.5	--	--	14.5
	12	15.0	21.5	--	--	16.0	16.0	25.5	--	--	15.5

MINIMUM REQUIRED EMBEDMENT AND SECTION MODULUS

***DO NOT USE H-PILES WITH TIMBER LAGGING FOR GROUNDWATER CONDITION, SHORING HEIGHT AND H-PILE SIZE SHOWN IF MINIMUM REQUIRED EMBEDMENT IS "--".**

NOTES:

1. AT THE CONTRACTOR'S OPTION, USE STANDARD TEMPORARY SHORING AS NOTED IN THE PLANS.
2. FOR STANDARD TEMPORARY SHORING, SEE STANDARD SHORING PROVISION.
3. STANDARD TEMPORARY SHORING IS BASED ON THE FOLLOWING IN-SITU ASSUMED SOIL PARAMETERS:
   UNIT WEIGHT, γ = 120 PCF
   FRICTION ANGLE, ϕ = 30 DEGREES
   COHESION, c = 0 PSF
4. DO NOT USE STANDARD TEMPORARY SHORING IF ASSUMED SOIL PARAMETERS ARE NOT APPLICABLE.
5. DO NOT USE STANDARD TEMPORARY SHORING WHEN VERY LOOSE OR SOFT SOIL OR MUCK IS WITHIN THE EMBEDMENT DEPTH.
6. USE GROUNDWATER ELEVATION NOTED IN THE PLANS. IF NO GROUNDWATER ELEVATION IS SHOWN IN THE PLANS, USE "GROUNDWATER ELEVATION BETWEEN BOTTOM OF SHORING AND PILE TIP" FOR GROUNDWATER CONDITION. DO NOT USE STANDARD TEMPORARY SHORING IF GROUNDWATER IS ABOVE BOTTOM OF SHORING.
7. AT THE CONTRACTOR'S OPTION OR IF AVAILABLE CLEAR DISTANCE IS LESS THAN THE MINIMUM REQUIRED FOR CONCRETE BARRIER, SET BARRIER NEXT TO AND UP AGAINST TRAFFIC SIDE OF PILES AND USE "SURCHARGE CASE WITH TRAFFIC IMPACT".
8. AT THE CONTRACTOR'S OPTION OR IF AVAILABLE CLEAR DISTANCE IS LESS THAN 4' FOR TEMPORARY GUARDRAIL, ATTACH GUARDRAIL TO TRAFFIC SIDE OF PILES AS SHOWN IN THE PLANS AND USE "SURCHARGE CASE WITH TRAFFIC IMPACT".
9. MINIMUM REQUIRED EXTENSION IS 6" FOR "SLOPE OR SURCHARGE CASE WITH NO TRAFFIC IMPACT" AND 32" FOR "SURCHARGE CASE WITH TRAFFIC IMPACT".
10. MINIMUM REQUIRED EMBEDMENT FOR H-PILES WITH TIMBER LAGGING IS BASED ON DRIVEN H-PILES AT MAXIMUM 6' SPACING. AT THE CONTRACTOR'S OPTION, EMBEDMENT DEPTHS MAY BE REDUCED BY 25% FOR DRILLED-IN H-PILES.
11. SUBMIT A "STANDARD TEMPORARY SHORING SELECTION FORM" AT LEAST 7 DAYS BEFORE STARTING TEMPORARY SHORING CONSTRUCTION. UP TO 3 SHORING LOCATIONS MAY BE INCLUDED ON EACH FORM. STANDARD SHORING SELECTION FORMS ARE AVAILABLE FROM: connect.ncdot.gov/resources/Geological/Pages/Geotech_Forms_Details.aspx
12. CONTACT THE ENGINEER IF PILES DO NOT ATTAIN THE MINIMUM REQUIRED EMBEDMENT.

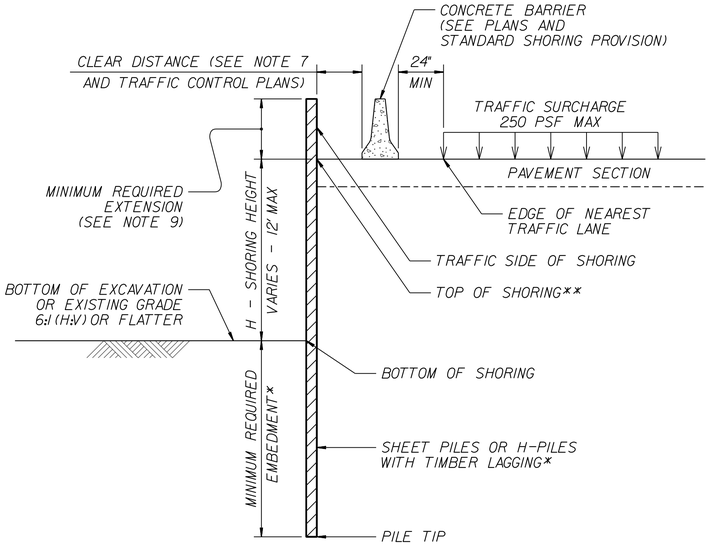

CONCRETE BARRIER

****TOP OF SHORING = EDGE OF PAVEMENT**

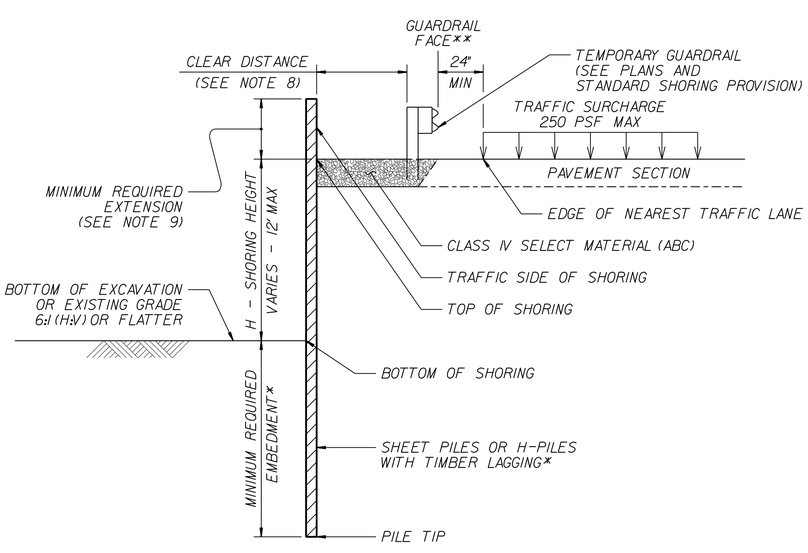

TEMPORARY GUARDRAIL

****GUARDRAIL FACE = EDGE OF PAVEMENT**

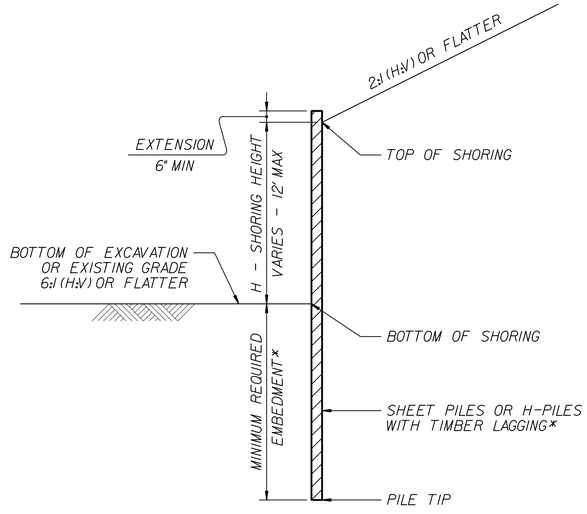

STANDARD TEMPORARY SHORING

(SLOPE CASE)

***SEE TABLE ABOVE.**

STANDARD TEMPORARY SHORING

(SURCHARGE CASE)

***SEE TABLE ABOVE.**

NORTH CAROLINA DEPARTMENT OF TRANSPORTATION DIVISION OF HIGHWAYS

GEOTECHNICAL ENGINEERING UNIT

STANDARD DETAIL NO. 1801.01

STANDARD TEMPORARY SHORING

DATE: 11-19-13

DocuSign Envelope ID: 3902A11E-4764-4E81-9A8A-BEE0FC8E04F2

COMPUTED BY: AMP DATE: 6/8/2019
CHECKED BY: DJM DATE: 6/8/2019

Dewberry
2610 WYCLIFF ROAD
SUITE 410
RALEIGH, NC 27607
PHONE: 919.881.9939
NC COA No. P-0929

PROJECT REFERENCE NO.	SHEET NO.
B-4635	3B-1

STATE OF NORTH CAROLINA
DIVISION OF HIGHWAYS

SUMMARY OF EARTHWORK

STATION	STATION	UNCL. EXCAV. C.Y.	UNDERCUT EXCAV. C.Y.	EMBANK. C.Y. (+%)	BORROW C.Y.	WASTE C.Y.
–DETL– STA. 10+00.00	–DETL– STA. 16+64.88 BEGIN BRIDGE	58		6,736	6,678	0
–DETL– STA. 20+00.00 END BRIDGE	–DETL– STA. 26+35.00	67		5,311	5,244	0
SUBTOTALS:		125		12,047	11,922	0
–L– STA. 14+80.00	–L– STA. 18+97.31 BEGIN BRIDGE	320	1,750 *	1,923	1,603	1,500
–L– STA. 20+63.89 END BRIDGE	–L– STA. 24+25.00	120	750 *	1,956	1,836	500
SUBTOTALS:		440	2,500 *	3,878	3,438	2,000
–DETL– STA. 10+00.00	–DETL– STA. 16+64.88 BEGIN BRIDGE	3,062		35	0	3,027
–DETL– STA. 20+00.00 END BRIDGE	–DETL– STA. 26+35.00	3,431		0	0	3,431
SUBTOTALS:		6,493		35	0	6,458
TOTALS		7,058	2,500 *	15,960	15,360	8,458
MATERIAL FOR SHOULDER CONSTRUCTION				600	600	
ADDITIONAL UNDERCUT			700 *			700
PROJECT TOTALS		7,058	3,200	16,560	15,960	9,158
EST. 5% TO REPLACE TOP SOIL ON BORROW PIT					798	
GRAND TOTALS:		7,058	3,200	16,560	16,758	9,158
SAY:		7,060	3,200		16,760	9,200

Earthwork quantities and contingency items are based in part on the Geotechnical Recommendations.

Note: Approximately quantities only. Unclassified Excavation, Fine Grading, Clearing and Grubbing, Breaking of Existing Asphalt, and Removal of Existing Asphalt will be paid for at the contract lump sum price for grading.

* UNDERCUT EXCAVATION TO BE BACKFILLED WITH 2,500 CY OF SELECT GRANULAR MATERIAL, CLASS III
SELECT GRANULAR MATERIAL = 700 CY CONTINGENCY
GEOTEXTILE FOR SOIL STABILIZATION = 700 SY CONTINGENCY

SHOULDER BERM GUTTER SUMMARY

SURVEY LINE	STATION	STATION	LOCATION LT/RT/CL	LENGTH
–L–	STA. 18+59.02	STA. 18+74.00	LT	15
–L–	STA. 20+87.00	STA. 21+02.47	LT	15.5
–L–	STA. 18+59.02	STA. 18+74.00	RT	15
–L–	STA. 20+87.00	STA. 21+02.47	RT	15.5
			TOTAL:	61
			SAY:	61

ASPHALT REMOVAL SUMMARY

SURVEY LINE	STATION	STATION	LOCATION LT/RT/CL	SY
–L–	17+50	18+50	CL	317.62
–L–	21+25	22+50	CL	389.61
–DETL–	12+57	16+65	CL	997.65
–DETL–	20+00	23+74	CL	914.22
			TOTAL:	2,619.10
			SAY:	2,620

ASPHALT BREAKING SUMMARY

SURVEY LINE	STATION	STATION	LOCATION LT/RT/CL	SY
–L–	18+50	19+12	CL	198.17
–L–	20+50	21+25	CL	240.20
			TOTAL:	438.36
			SAY:	440

"N" = DISTANCE FROM EDGE OF LANE TO FACE OF GUARDRAIL.
TOTAL SHOULDER WIDTH = DISTANCE FROM EDGE OF TRAVEL LANE TO SHOULDER BREAK POINT.
FLARE LENGTH = DISTANCE FROM LAST SECTION OF PARALLEL GUARDRAIL TO END OF GUARDRAIL.
W = TOTAL WIDTH OF FLARE FROM BEGINNING OF TAPER TO END OF GUARDRAIL.
G = GATING IMPACT ATTENUATOR TYPE 350
NG = NON-GATING IMPACT ATTENUATOR TYPE 350

GUARDRAIL SUMMARY

SURVEY LINE	BEG. STA.	END STA.	LOCATION	LENGTH			WARRANT POINT		"N" DIST. FROM E.O.L.	TOTAL SHOUL. WIDTH	FLARE LENGTH		W		ANCHORS								IMPACT ATTENUATOR TYPE 350			SINGLE FACED GUARDRAIL	REMOVE EXISTING GUARDRAIL	REMOVE AND STOCKPILE EXISTING GUARDRAIL	REMARKS
				STRAIGHT	SHOP CURVED	DOUBLE FACED	APPROACH END	TRAILING END			APPROACH END	TRAILING END	APPROACH END	TRAILING END	XI MOD	XI	GREU TL–3	M–350	B–77	CAT–1	VI MOD	BIC	AT–1	EA	G	NG				
–L–	STA. 16+47.31	STA. 18+97.31	LT	250				STA. 16+50.00	8′ TO 10′	13′		231.25		3			1		1									134.29		
–L–	STA. 14+97.31	STA. 18+97.31	RT	400			STA. 14+98.82		8′ TO 10′	13′	381.25		3				1		1									133.41		
–L–	STA. 20+63.89	STA. 23+57.64	LT	293.75			STA. 23+55.00		8′ TO 10′	13′	275		3				1		1									108.01		
–L–	STA. 20+63.89	STA. 23+01.39	RT	237.50				STA. 23+00.00	8′ TO 10′	13′		218.75		3			1		1									108.22		
			TOTAL	1,181.25													4		4									483.93		
			DEDUCTIONS TYPE B–77 (22.875 LF PER UNIT)	91.5																										
			GREU, TL–3 (50 LF PER UNIT)	200																										
			PROJECT TOTAL	889.75													4		4									483.93		
			SAY	925													4		4									490		
			ADDITIONAL GUARDRAIL POST	6																										

TEMPORARY GUARDRAIL SUMMARY

SURVEY LINE	BEG. STA.	END STA.	LOCATION	LENGTH			WARRANT POINT		"N" DIST. FROM E.O.L.	TOTAL SHOUL. WIDTH	FLARE LENGTH		W		ANCHORS								IMPACT ATTENUATOR TYPE 350			SINGLE FACED GUARDRAIL	REMOVE EXISTING GUARDRAIL	REMOVE AND STOCKPILE EXISTING GUARDRAIL	REMARKS
				STRAIGHT	SHOP CURVED	DOUBLE FACED	APPROACH END	TRAILING END			APPROACH END	TRAILING END	APPROACH END	TRAILING END	XI MOD	XI	GREU TL–3	M–350	B–77	CAT–1	VI MOD	BIC	AT–1	EA	G	NG				
–DETL–	STA. 15+89.15	STA. 16+64.15	LT	75				STA. 15+89.71	6	9		50		1			1		1											
–DETL–	STA. 11+65.87	STA. 16+64.87	RT	500			STA. 11+68.80		6	9	50		1				1		1											
–DETL–	STA. 20+00.72	STA. 20+81.97	LT	81.25			STA. 20+75.95		6	9	50		1				1		1											
–DETL–	STA. 19+99.00	STA. 24+05.25	RT	406.25				STA. 24+00.33	6	9		50		1			1		1											
–L–	STA. 21+59.00	STA. 23+13.00	RT	112.5													1													EXISTING GUARDRAIL EXTENDED FOR TRAFFIC CONTROL MEASURES. SEE TRAFFIC MANAGEMENT PLANS.
			TOTAL	1,175													5		4											
			DEDUCTIONS TYPE B–77 (22.875 LF PER UNIT)	91.5																										
			GREU, TL–3 (50 LF PER UNIT)	250																										
			PROJECT TOTAL	833.5													5		4											
			SAY	875													5		4											

2/12/2020 8:37:06 AM
USER: amalone
PLOTSCALE: 1.0000
C:\Projects\4635\Roadway\PSH_3B-1.dgn

DocuSign Envelope ID: 3902A11E-4764-4E81-9A8A-BEE0FC8E04F2

PCIEZ23Y

COMPUTED BY: CM DATE: 1/21/2020

CHECKED BY: SMB DATE: 1/21/2020

Dewberry
2610 WYCLIFF ROAD
SUITE 410
RALEIGH, NC 27607
PHONE: 919.881.9939
NC CoA No. P-0929

PROJECT NO.	SHEET NO.
B-4635	3D-1

NORTH CAROLINA DEPARTMENT OF TRANSPORTATION
DIVISION OF HIGHWAYS

Note: Invert Elevations indicated are for Bid Purposes only and shall not be used for project construction stakeout.
See "Standard Specifications For Roads and Structures, Section 300-5".

LIST OF PIPES, ENDWALLS, ETC. (FOR PIPES 48 INCHES & UNDER)

| LINE & STATION | OFFSET | | STRUCTURE NUMBER FROM | STRUCTURE NUMBER TO | TOP ELEVATION FT. | INVERT ELEVATION FT. | INVERT ELEVATION FT. | MINIMUM REQUIRED SLOPE % | Drainage Pipe (RCP, CSP, CAAP, HDPE, or PVC) SIZE 12 | 15 | 18 | 24 | 30 | 36 | 42 | 48 | DO NOT USE RCP | DO NOT USE CSP | DO NOT USE CAAP | DO NOT USE HDPE | DO NOT USE PVC | C. S. PIPE THICKNESS OR GAUGE 12 | 15 | 18 | 24 | 30 | 36 | ENDWALLS STD. 838.01 OR STD. 838.11 (UNLESS NOTED OTHERWISE) CY | REINFORCED ENDWALLS CY | DRAINAGE STRUCTURE MASONRY CY | QUANTITIES FOR DRAINAGE STRUCTURES NOTE: TOTAL LIN. FT. FOR PAY QUANTITY SHALL BE A + (1.3 X B) A 0' THRU 5' EACH | A 5' THRU 10' LIN. FT. | B 10' AND ABOVE LIN. FT. | C.B. STD. 840.01 OR STD. 840.02 | FRAME, GRATES, AND HOOD STD. 840.03 GRATE TYPE E | F | G | CONCRETE TRANSITIONAL SECTION D.I. STD. 852.06 OR STD. 852.04 | C.B. STD. 852.05 | OPEN THROAT C.B. STD. 840.04 OR STD. 840.05 | CONCRETE BRIDGE APPROACH D.I. STD. 840.13 | D.I. STD. 840.14 OR STD. 840.15 | D.I. FRAME AND GRATES STD. 840.16 | G.D.I. TYPE "A" STD. 840.17 OR STD. 840.26 | G.D.I. TYPE "B" STD. 840.18 OR STD. 840.27 | G.D.I. TYPE "D" STD. 840.19 OR STD. 840.28 | G.D.I. (W.S. FLAT) FRAME WITH GRATE STD. 840.20 | G.D.I. (W.S. FLAT) FRAME W/ 2 GRATES STD. 840.20 | G.D.I. (W.S. SAG) FRAME W/ GRATE STD. 840.22 | G.D.I. (W.S. SAG) FRAME W/ 2 GRATES STD. 840.22 | G.D.I. (N.S. SAG) FRAME W/ GRATE STD. 840.24 | G.D.I. (N.S. SAG) FRAME W/ 2 GRATES STD. 840.24 | G.D.I. (N.S. FLAT) FRAME W/ GRATE STD. 840.29 | G.D.I. (N.S. FLAT) FRAME W/ 2 GRATES STD. 840.29 | DRIVEWAY D.I. STD. 840.30 | FRAME W/ GRATE FOR DRIVEWAY STD. 840.30 | J.B. STD. 840.31 OR STD. 840.32 | ANGLED VANE GRATES AND FRAMES STD. 840.33 | T.B.J.B. STD. 840.34 | T.B.D.I. STD. 840.35 | T.B.D.I. FOR STEEL GRATES STD. 840.36 | STEEL FRAME WITH TWO GRATES STD. 840.37 | TEMP STEEL PLATE COVER MASONRY DRAINAGE | 15" C.S. ELBOW | 18" C.S. ELBOW | 24" C.S. ELBOW | 30" C.S. ELBOW | 36" C.S. ELBOW | ##" C.S. ELBOW | BERM DITCH OUTLET STD. 850.10 (PER EACH) | BERM DITCH OUTLET STD. 850.11 (PER EACH) | | MODIFIED CONC. FLUME | PREFORMED SCOUR HOLE (PER EACH) | ENERGY DISSIPATION BASIN | FLOWABLE FILL CY | CONCRETE COLLARS CL. "B" STD. 840.72 CY | CONCRETE AND BRICK PIPE PLUG STD. 840.71 CY | PIPE REMOVAL LIN. FT. | REMARKS |
|---|---|---

DocuSign Envelope ID: 3902A11E-4764-4E81-9A8A-BEE0FC8E04F2

COMPUTED BY: TYLER C. BOTTOMS DATE: 7/19/19
CHECKED BY: JINYOUNG PARK DATE: 8/2/19

STATE OF NORTH CAROLINA
DIVISION OF HIGHWAYS

PROJECT REFERENCE NO.	SHEET NO.
B-4635	3G-1

SUMMARY OF SUBSURFACE DRAINAGE

LINE	STATION	STATION	LOCATION LT/RT/CL	DRAIN TYPE* UD/BD/SD	LF
CONTINGENCY				SD	200
				TOTAL LF:	200

*UD = UNDERDRAIN
*BD = BLIND DRAIN
*SD = SUBSURFACE DRAIN

SUMMARY OF ROCK PLATING

LINE	BEGINNING SLOPE (H:V)	APPROX. STATION	ENDING SLOPE (H:V)	APPROX. STATION	LOCATION LT/RT	ROCK PLATING DETAIL NO. 1/2/3/4	RIPRAP CLASS* 1/2/B	ROCK PLATING SY
-L-	2.5:1	18+25±	2:1	18+75±	LT	2	-	180
-L-	2:1	20+85±	2.5:1	21+25±	LT	2	-	120
							TOTAL SY:	300

*USE CLASS 1,2, OR B RIPRAP IF RIPRAP CLASS IS NOT SHOWN FOR ROCK PLATING LOCATION.

2/12/2020 8:07:19 AM
...\Proj\B4635_RDY_PSH_3G-1.dgn
USER: aprieto

DocuSign Envelope ID: 3902A11E-4764-4E81-9A8A-BEE0FC8E04F2

Dewberry
2610 WYCLIFF ROAD
SUITE 410
RALEIGH, NC 27607
PHONE: 919.881.9939
NC COA No. P-0929

PROJECT REFERENCE NO.	SHEET NO.
B-4635	4
R/W SHEET NO.	

ROADWAY DESIGN ENGINEER

NORTH CAROLINA PROFESSIONAL SEAL 036360 ENGINEER DENNIS J. MORY
DocuSigned by: Dennis J. Mory
2/28/2020

HYDRAULICS ENGINEER

NORTH CAROLINA PROFESSIONAL SEAL 037676 ENGINEER JEN M. BONDOR
DocuSigned by: Jen M. Bondor
2/28/2020

DOCUMENT NOT CONSIDERED FINAL UNLESS ALL SIGNATURES COMPLETED

5/14/99

NAD 83/2011

2:1 MAX SLOPE ROCK PLATING FROM
STA. 18+25.00 LT TO STA. 18+97.31 LT
STA. 20+63.89 LT TO STA. 21+25.00 LT

SEE STANDARD ROADWAY DRAWING 275.01, DETAIL NO. 2 FOR ROCK PLATING DETAILS.

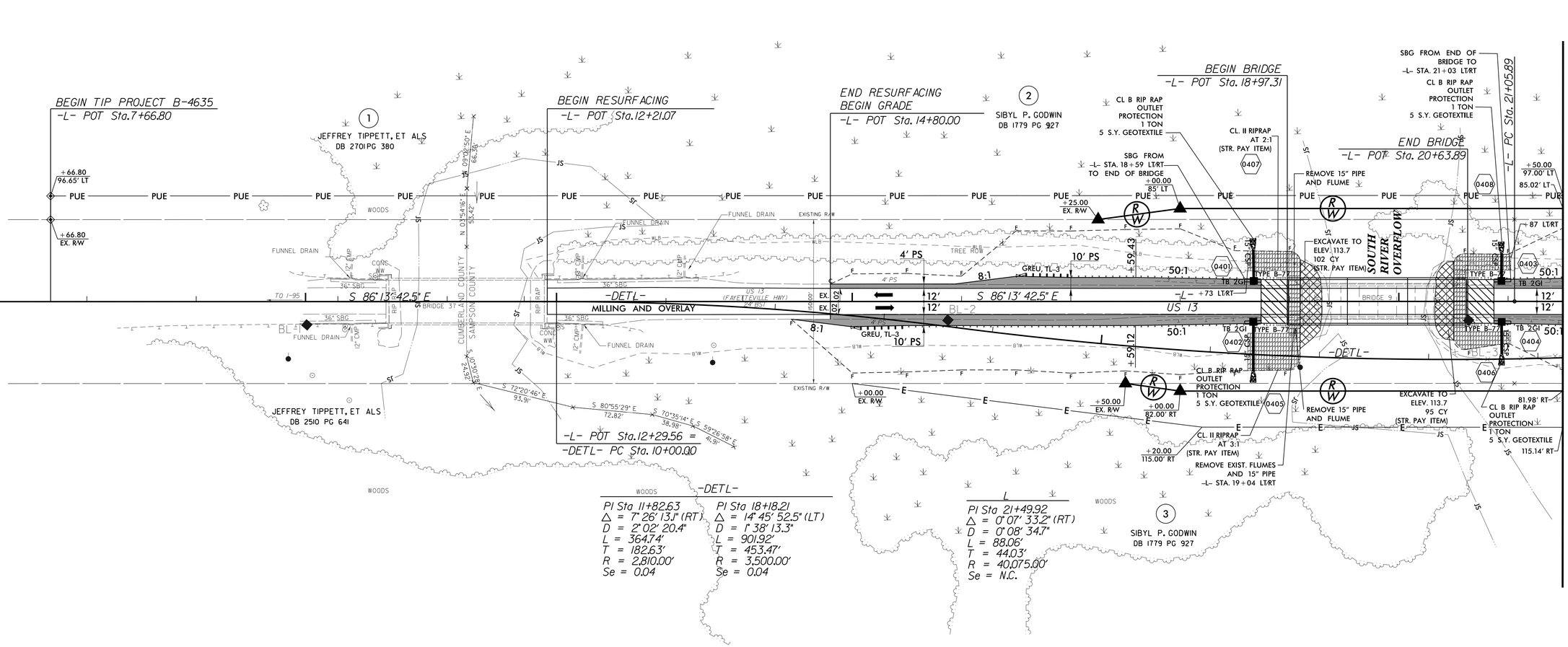

NOTE:

- UNCLASSIFIED STRUCTURE EXCACATION
- PAVED SHOULDER
- BRIDGE APPROACH SLAB

PARCEL INDEX

PARCEL No.	SHEET No.	PROPERTY OWNER NAME
1	4	JEFFREY TIPPETT, ET ALS
2	4,5	SIBYL P. GODWIN
3	4,5	SIBYL P. GODWIN

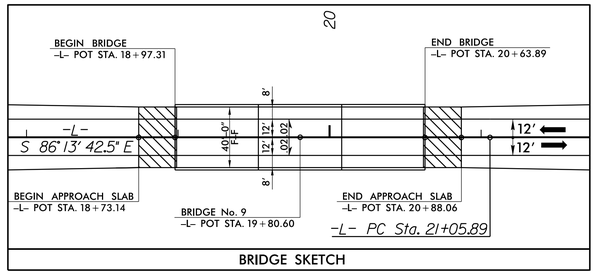

BRIDGE SKETCH

SEE SHEETS 8 & 9 FOR -L- PROFILE
SEE SHEETS 6 & 7 FOR DETOUR PLAN & PROFILE
SEE SHEETS S-1 THRU S-30 FOR STRUCTURE PLANS

2/12/2020 8:07:22 AM
USER: DSMITH
C:\Projects\B4635_RDY_PSH04.dgn

DocuSign Envelope ID: 3902A11E-4764-4E81-9A8A-BEE0FC8E04F2

Dewberry
2610 WYCLIFF ROAD
SUITE 410
RALEIGH, NC 27607
PHONE: 919.881.9939
NC COA No. F-0929

PROJECT REFERENCE NO.	SHEET NO.
B-4635	5
R/W SHEET NO.	

ROADWAY DESIGN ENGINEER
NORTH CAROLINA PROFESSIONAL SEAL 021001 ENGINEER DENNIS J. MORY
2/28/2020

HYDRAULICS ENGINEER
NORTH CAROLINA PROFESSIONAL SEAL 23786 ENGINEER STEVEN M. BONDOR
2/28/2020

DOCUMENT NOT CONSIDERED FINAL UNLESS ALL SIGNATURES COMPLETED

NAD 83/2011

L
PI Sta 21+49.92
△ = 0° 07' 33.2" (RT)
D = 0° 08' 34.7"
L = 88.06'
T = 44.03'
R = 40,075.00'
Se = N.C.

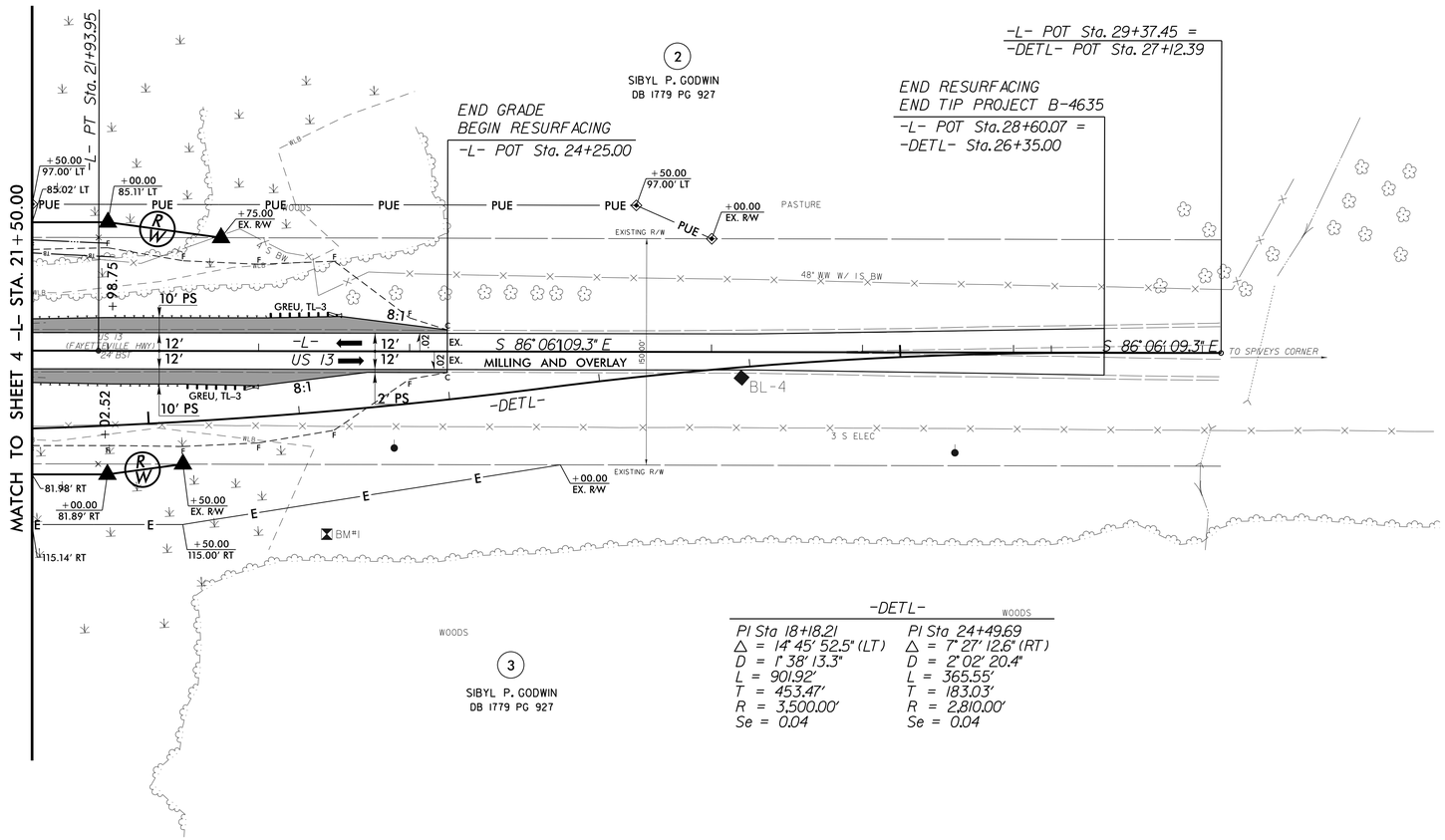

-DETL-

PI Sta 18+18.21	PI Sta 24+49.69
△ = 14° 45' 52.5" (LT)	△ = 7° 27' 12.6" (RT)
D = 1° 38' 13.3"	D = 2° 02' 20.4"
L = 901.92'	L = 365.55'
T = 453.47'	T = 183.03'
R = 3,500.00'	R = 2,810.00'
Se = 0.04	Se = 0.04

NOTE:
PAVED SHOULDER

PARCEL INDEX

PARCEL No.	SHEET No.	PROPERTY OWNER NAME
1	4	JEFFREY TIPPETT, ET ALS
2	4,5	SIBYL P. GODWIN
3	4,5	SIBYL P. GODWIN

SEE SHEETS 8 & 9 FOR -L- PROFILE
SEE SHEETS 6 & 7 FOR DETOUR PLAN & PROFILE
SEE SHEETS S-1 THRU S-30 FOR STRUCTURE PLANS

5/14/99
2/12/2020 8:07:24 AM
J:\Proj\B4635_RDY_PSH05.dgn
USER: aprieto

DocuSign Envelope ID: 0898FA08-33A6-44D1-ADBF-A8B414501BB4

Dewberry
2610 WYCLIFF ROAD
SUITE 410
RALEIGH, NC 27607
PHONE: 919.881.9939
NC COA No. F-0929

PROJECT REFERENCE NO.	SHEET NO.
B-4635	6

R/W SHEET NO.

ROADWAY DESIGN ENGINEER
NORTH CAROLINA PROFESSIONAL SEAL
Dennis J. Mory, P.E.
3/2/2020

HYDRAULICS ENGINEER
NORTH CAROLINA PROFESSIONAL SEAL
Jim Bondor
2/28/2020

DOCUMENT NOT CONSIDERED FINAL UNLESS ALL SIGNATURES COMPLETED

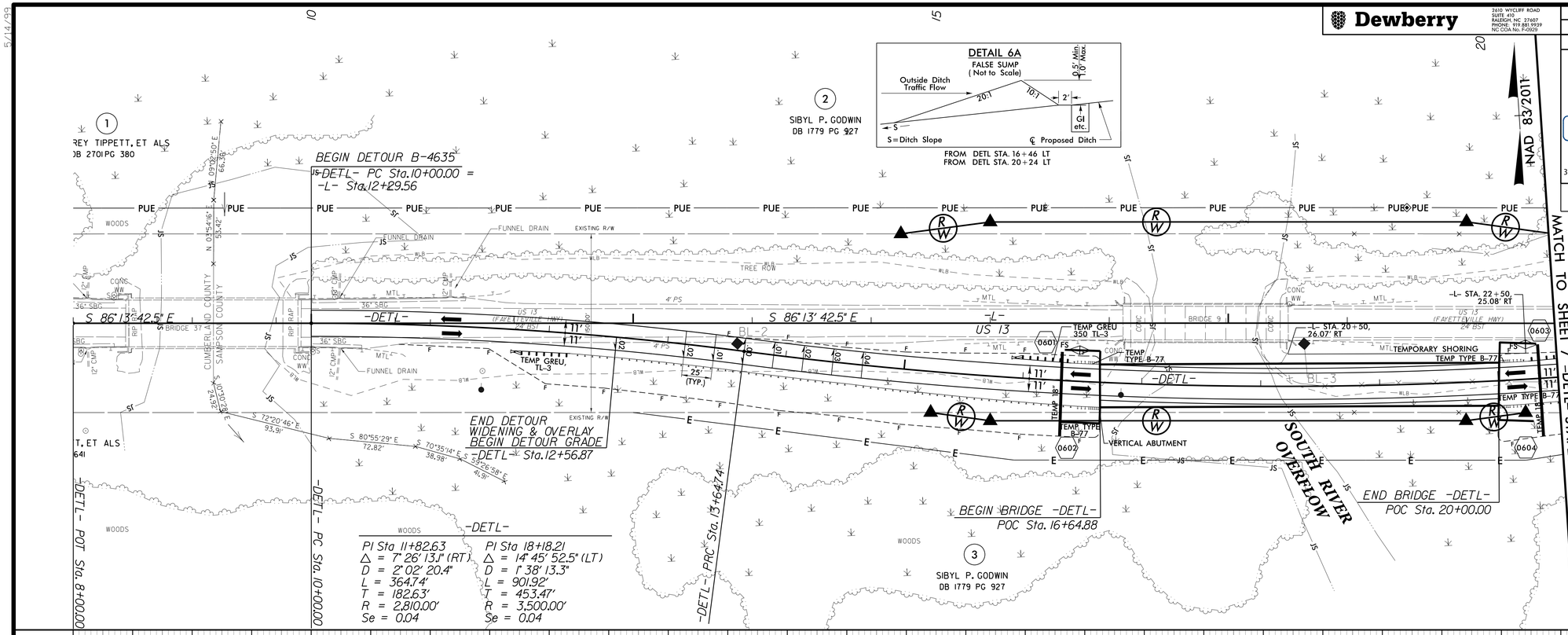

BRIDGE HYDRAULIC DATA

DESIGN DISCHARGE	= 4030	CFS
DESIGN FREQUENCY	= 10	YRS
DESIGN HW ELEVATION	= 116.0	FT
BASE DISCHARGE	= 7820	CFS
BASE FREQUENCY	= 100	YRS
BASE HW ELEVATION	= 119.3	FT
OVERTOPPING DISCHARGE	= N/A	CFS
OVERTOPPING FREQUENCY	= N/A	YRS
OVERTOPPING ELEVATION	= N/A	FT
DATE OF SURVEY	= 6/25/2018	
W.S. ELEVATION AT DATE OF SURVEY	= 110.4	FT

5/14/99
2/28/2020 12:51:28 PM
J:\Proj\B4635_RDY_PSH06.dgn

DocuSign Envelope ID: EB2412A9-3417-4380-8258-26273AD9B002

Dewberry
2610 WYCLIFF ROAD
SUITE 410
RALEIGH, NC 27607
PHONE: 919.881.9939
NC COA No. P-0929

PROJECT REFERENCE NO.	SHEET NO.
B-4635	7
R/W SHEET NO.	

ROADWAY DESIGN ENGINEER

NORTH CAROLINA PROFESSIONAL SEAL 038786 ENGINEER DENNIS J. MORY
DocuSigned by: Dennis J. Mory
3/2/2020

HYDRAULICS ENGINEER

NORTH CAROLINA PROFESSIONAL SEAL 12786 ENGINEER ALLEN M. BONDOR
DocuSigned by: Allen M. Bondor
3/2/2020

DOCUMENT NOT CONSIDERED FINAL UNLESS ALL SIGNATURES COMPLETED

5/14/99

25

NAD 83/2011

-DETL- POT Sta. 27+12.39 =
-L- POT Sta. 29+37.45

2
SIBYL P. GODWIN
DB 1779 PG 927

END DETOUR B-4635
-DETL- Sta. 26+35.00 =
-L- Sta. 28+60.07

MATCH TO SHEET 6 -DETL- STA. 20+50.00

PUE PUE PUE PUE PUE

WOODS

PASTURE

EXISTING R/W

WLB

4'S BW

48" WW W/ IS BW

100'
PVMT TAPER
(LT. & RT)

-L-

INV=123.9

US 13

TEMP GREU.
TL-3

11'
11'

-DETL-

25'
(TYP.)

RLB

E

BM#1

S 86° 06' 09.31" E
TO SPIVEYS CORNER

11'
11'

TEMP GREU.
TL-4

3 S ELEC

EXISTING R/W

END DETOUR GRADE
BEGIN DETOUR
WIDENING & OVERLAY
-DETL- Sta. 23+73.47

-DETL- PRC Sta. 22+66.65

-DETL- PT Sta. 26+32.20

WOODS

3
SIBYL P. GODWIN
DB 1779 PG 927

-DETL-

PI Sta 18+18.21	PI Sta 24+49.69
△ = 14° 45' 52.5" (LT)	△ = 7° 27' 12.6" (RT)
D = 1° 38' 13.3"	D = 2° 02' 20.4"
L = 901.92'	L = 365.55'
T = 453.47'	T = 183.03'
R = 3,500.00'	R = 2,810.00'
Se = 0.04	Se = 0.04

-DETL-

PI = 21+60.00
EL = 124.54'
VC = 200'
K = 331
DS = 75 MPH

BM #1
-L- STA 23+45.41
121.21' RIGHT
ELEV. 115.37'
RR SPIKE IN BASE OF 13" PINE

EL.124.21'

PROPOSED GRADE

(+)0.3042%

(-)0.3000%

(-)0.3000%

EXISTING GROUND

END DETOUR GRADE
-DETL- Sta.23+73.47
EL.123.90'

END DETOUR
OVERLAY & WIDENING
-DETL- Sta.26+35.00

160 150 140 130 120 110 100 90 80 70

20 21 22 23 24 25 26

SEE SHEET 4 & 5 FOR -L- PLAN

2/28/2020 12:56:30 PM
USER: dbondor
C:\Projects\B-4635\RDY_PSH07.dgn

DocuSign Envelope ID: 0898FA08-33A6-44D1-ADBF-A8B414501BB4

5/14/99

Dewberry
2610 WYCLIFF ROAD
SUITE 410
RALEIGH, NC 27607
PHONE: 919.881.9939
NC COA No. P-0929

PROJECT REFERENCE NO.	SHEET NO.
B-4635	8

ROADWAY DESIGN ENGINEER
NORTH CAROLINA PROFESSIONAL SEAL 038031 ENGINEER DENNIS J. MORI
DocuSigned by: Dennis J. Mori
3/2/2020

HYDRAULICS ENGINEER
NORTH CAROLINA PROFESSIONAL SEAL 12786 ENGINEER STEVEN M. BONDURANT
DocuSigned by: Steve Bondurant
2/28/2020

DOCUMENT NOT CONSIDERED FINAL UNLESS ALL SIGNATURES COMPLETED

BRIDGE HYDRAULIC DATA

DESIGN DISCHARGE	= 6560	CFS
DESIGN FREQUENCY	= 50	YRS
DESIGN HW ELEVATION	= 118.1	FT
BASE DISCHARGE	= 7820	CFS
BASE FREQUENCY	= 100	YRS
BASE HW ELEVATION	= 119.1	FT
OVERTOPPING DISCHARGE	= 500+	CFS
OVERTOPPING FREQUENCY	= 19260	YRS
OVERTOPPING ELEVATION	= 124.5	FT
DATE OF SURVEY	= 6/25/2018	
W.S. ELEVATION AT DATE OF SURVEY	= 110.4	FT

PI = 16+70.00
EL = 124.35'
VC = 300'
K = 231
DS = > 60 MPH

PI = 19+80.00
EL = 127.45'
VC = 300'
K = 158
DS = 60 MPH

-L-

BEGIN RESURFACING -L- Sta. 12+21.07

END RESURFACING
BEGIN GRADE -L- Sta. 14+80.00 Fl. 124.92'

PROPOSED RESURFACING

PROPOSED GRADE

BEGIN BRIDGE -L- Sta. 18+97.31

END BRIDGE -L- Sta. 20+63.89

(+)1.0000%

(-)0.9000%

(-)0.3000%

(+)1.0000%

CL -L- STA. 19+80.6
GRADE ELEV. = 127.44
SKEW = 90° DEG.
36" PSCG
3@55', OAL=165'

4.0' END BENT CAPS

REMOVE EXISTING CONCRETE ABUTMENTS

CL. II RIPRAP AT 1.5:1

EXISTING GROUND

PROPOSED BRIDGE

3.5'

EXCAVATE TO ELEV. = 113.7'
102 CY
LOW SIDE/LOW CHORD

REMOVE EXISTING CONCRETE PIER

WSEL = 110.4'
6/25/2018

EXCAVATE TO ELEV. = 113.7'
95 CY
PROP 100 YR = 119.1'
UPSTREAM FACE

CHANNEL

UNDERCUT EXCAVATION
-L- STA. 14+90 RT TO
-L- STA. 18+75 RT

UNDERCUT EXCAVATION
-L- STA. 16+25 LT TO
-L- STA. 18+25 LT

UNDERCUT EXCAVATION
UNCLASSIFIED STRUCTURE EXCACATION

SEE SHEET 4 FOR -L- PLAN

2/28/2020 12:51:32 PM
USER: smbondurant
PW:\Projects\B-4635\Design\Hydraulics\Roadway\B4635_PFL08.dgn

DocuSign Envelope ID: 0898FA08-33A6-44D1-ADBF-A8B414501BB4

5/14/99

Dewberry
2610 WYCLIFF ROAD
SUITE 410
RALEIGH, NC 27607
PHONE: 919.881.9939
NC COA No. F-0929

PROJECT REFERENCE NO.	SHEET NO.
B-4635	9

ROADWAY DESIGN ENGINEER	HYDRAULICS ENGINEER
NORTH CAROLINA PROFESSIONAL SEAL ENGINEER DENNIS J. MORY	NORTH CAROLINA PROFESSIONAL SEAL ENGINEER STEVEN M. BONDOR
3/2/2020	2/28/2020

DOCUMENT NOT CONSIDERED FINAL UNLESS ALL SIGNATURES COMPLETED

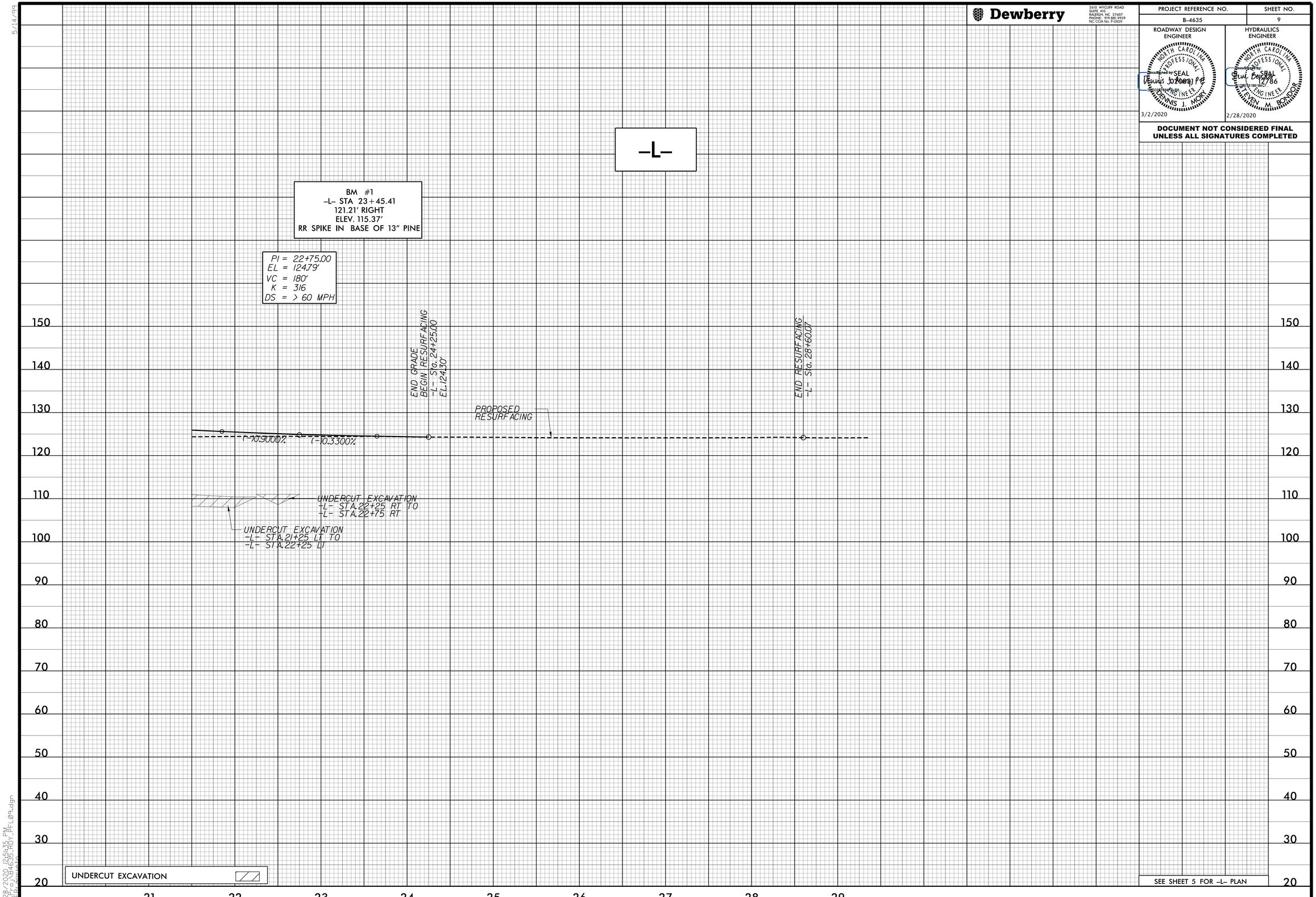

SEE SHEET 5 FOR -L- PLAN

2/28/2020 12:51:35 PM
...\Proj\B4635_ROY_PFL09.dgn
USER: gnrcto

PROJECT REFERENCE NO.	SHEET NO.
B-4635	RW02C-1
Location and Surveys	

SURVEY CONTROL SHEET

W/ EXISTING CENTERLINE ALIGNMENTS PRIOR TO CONSTRUCTION

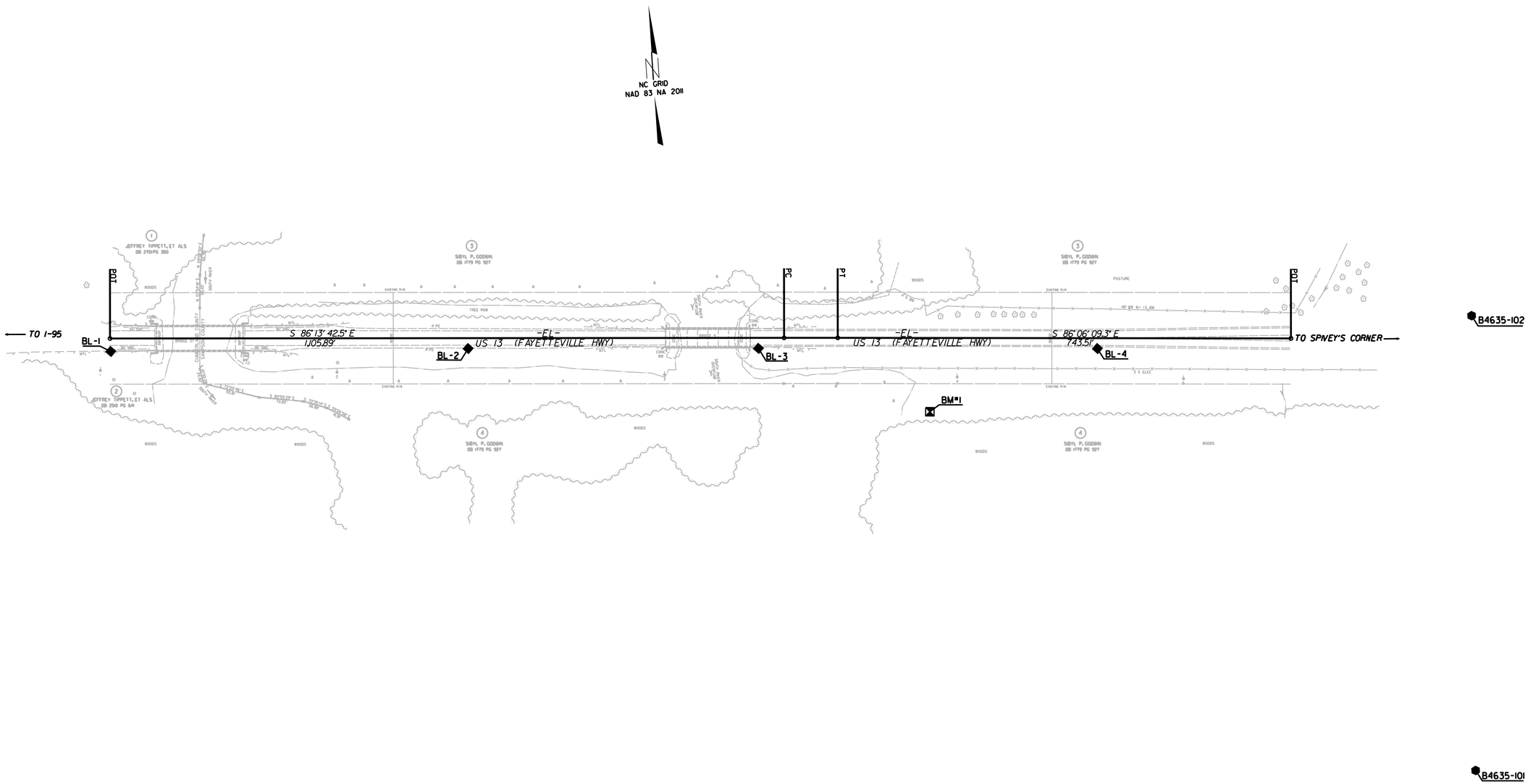

NOTES:

1. PROJECT CONTROL WAS ESTABLISHED USING GNSS, THE GLOBAL NAVIGATION SATELLITE SYSTEM.

2. THE SURVEY CONTROL DATA FOR THIS PROJECT HAS BEEN COMPILED FROM VARIOUS SOURCES. IF FURTHER INFORMATION REGARDING PROJECT CONTROL IS NEEDED, PLEASE CONTACT THE LOCATION AND SURVEYS UNIT.

REVISIONS

6/2/99

24-OCT-2018 16:52
Z:\controlsheets\b4635\work\b4635_ls_rw02c-1.dgn

6/2/99

REVISIONS

PROJECT REFERENCE NO.	SHEET NO.
B-4635	RW02C-2
Location and Surveys	

SURVEY CONTROL SHEET

W/ EXISTING CENTERLINE ALIGNMENTS PRIOR TO CONSTRUCTION

BL

POINT	DESC.	NORTH	EAST	ELEVATION
1	BL1	511749.0870	2107541.7710	125.14
2	BL2	511714.7510	2108127.1380	124.17
3	BL3	511683.2110	2108602.3670	123.71
4	BL4	511645.8650	2109157.1560	123.59
102	B4635-2	511655.4660	2109823.6350	124.48
101	B4635-1	510805.9760	2109869.4440	139.42

****
BM1 ELEVATION = 115.37
N 511561 E 2108876
RRS IN 13"PINE
****

EL

POINT	N	E	BEARING	DIST	DELTA	D	L	T	R
POT	511770.458	2107542.009							
LINE			S 86°13'42.5" E	1105.89					
PC	511697.715	2108645.507							
CURVE			S 86°09'55.9" E	88.05	00°07'33.2"(RT)	00°08'34.7"	88.05	44.03	40074.98
PT	511691.826	2108733.364							
LINE			S 86°06'09.3" E	743.51					
POT	511641.290	2109475.151							

NOTES:

1. PROJECT CONTROL WAS ESTABLISHED USING GNSS, THE GLOBAL NAVIGATION SATELLITE SYSTEM.

2. THE SURVEY CONTROL DATA FOR THIS PROJECT HAS BEEN COMPILED FROM VARIOUS SOURCES. IF FURTHER INFORMATION REGARDING PROJECT CONTROL IS NEEDED, PLEASE CONTACT THE LOCATION AND SURVEYS UNIT.

$$$

DocuSign Envelope ID: 7DC0C792-EBE7-48D7-943B-61DCF7CB5BEE

STATE OF NORTH CAROLINA
DIVISION OF HIGHWAYS

TRANSPORTATION MANAGEMENT PLAN

SAMPSON COUNTY

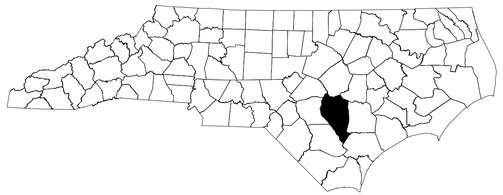

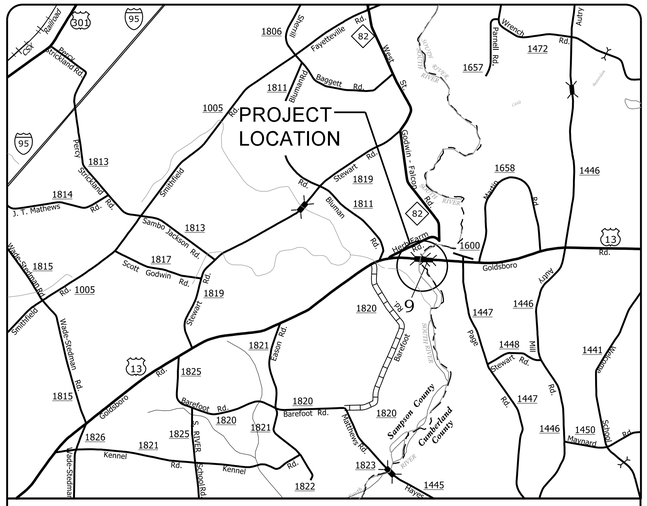

VICINITY MAP

INDEX OF SHEETS

SHEET NO.	TITLE
TMP-1	TITLE SHEET, VICINITY MAP, AND INDEX OF SHEETS
TMP-1A	LIST OF APPLICABLE ROADWAY STANDARD DRAWINGS AND LEGEND
TMP-2 THRU 2B	TRANSPORTATION OPERATIONS PLAN: (MANAGEMENT STRATEGIES AND GENERAL NOTES)
TMP-2C	TEMPORARY SHORING NOTES
TMP-3 & TMP-3A	TEMPORARY TRAFFIC CONTROL PHASING
TMP-4	PHASE I TEMPORARY TRAFFIC CONTROL DETAILS
TMP-5 THRU TMP-7	PHASE II TEMPORARY TRAFFIC CONTROL DETAILS
TMP-8 & TMP-9	PHASE III TEMPORARY TRAFFIC CONTROL DETAILS
TMP-10 THRU TMP-12	PHASE IV TEMPORARY TRAFFIC CONTROL DETAILS
TMP-13	WESTBOUND & EASTBOUND LANE CLOSURE DETAILS

SHEET NO.
TMP-1

DOCUMENT NOT CONSIDERED FINAL UNLESS ALL SIGNATURES COMPLETED



WORK ZONE SAFETY & MOBILITY
"from the MOUNTAINS to the COAST"

PLANS PREPARED BY:

J. TODD BROOKS, PE
PROJECT ENGINEER

J. ABRAHAM WILES
PROJECT DESIGN ENGINEER

NCDOT CONTACTS:

STEVE KITE, PE
PROJECT ENGINEER

SPENCER JENNINGS, PE
PROJECT DESIGN ENGINEER

DIVISION OF HIGHWAYS
STATE OF NORTH CAROLINA
DEPARTMENT OF TRANSPORTATION
WORK ZONE TRAFFIC CONTROL

PLAN PREPARED FOR N.C.D.O.T. BY:

Dewberry
2610 WYCLIFF ROAD
SUITE 410
RALEIGH, NC 27607
PHONE: 919.881.9939
NC COA No. F-0929

APPROVED: DocuSigned by: J. Todd Brooks
B1B6C648C86B4EA...

DATE: 2/18/2020

SEAL

NORTH CAROLINA PROFESSIONAL SEAL 17586 ENGINEER J. TODD BROOKS

PROJECT: B-4635

18-FEB-2020 14:41
P:\50071432\50074880-B-4635 PH2\CAD\Civil\B-4635\Traffic\TMP\Plans\B4635_TMP_TCP 1.dgn
jwiles AT PCOU36KJ

DocuSign Envelope ID: 7DC0C792-EBE7-48D7-943B-61DCF7CB5BEE

PROJ. REFERENCE NO.	SHEET NO.
B-4635	TMP-1A

ROADWAY STANDARD DRAWINGS

THE FOLLOWING ROADWAY STANDARDS AS SHOWN IN "ROADWAY STANDARD DRAWINGS" - PROJECT SERVICES UNIT - N.C. DEPARTMENT OF TRANSPORTATION - RALEIGH, N.C., DATED JANUARY 2018 ARE APPLICABLE TO THIS PROJECT AND BY REFERENCE HEREBY ARE CONSIDERED A PART OF THESE PLANS:

STD. NO.	TITLE
1101.01	WORK ZONE ADVANCE WARNING SIGNS
1101.02	TEMPORARY LANE CLOSURES
1101.03	TEMPORARY ROAD CLOSURES
1101.11	TRAFFIC CONTROL DESIGN TABLES
1110.01	STATIONARY WORK ZONE SIGNS
1110.02	PORTABLE WORK ZONE SIGNS
1130.01	DRUMS
1135.01	CONES
1145.01	BARRICADES - TYPE III
1150.01	FLAGGING DEVICES
1160.01	TEMPORARY CRASH CUSHION - REFLECTIVE END TREATMENT
1165.01	TRUCK MOUNTED ATTENUATOR - DELINEATION
1180.01	SKINNY DRUMS
1205.01	PAVEMENT MARKINGS - LINE TYPES AND OFFSETS
1205.02	PAVEMENT MARKINGS - DIVIDED AND UNDIVIDED ROADWAYS
1205.03	PAVEMENT MARKINGS - INTERCHANGES
1205.08	PAVEMENT MARKINGS - SYMBOLS AND WORD MESSAGES
1250.01	PAVEMENT MARKER SPACING
1251.01	RAISED PAVEMENT MARKERS - PERMANENT AND TEMPORARY

LEGEND

GENERAL

- DIRECTION OF TRAFFIC FLOW
- DIRECTION OF PEDESTRIAN TRAFFIC FLOW
- EXIST. PVMT.
- NORTH ARROW
- PROPOSED PVMT.
- TEMP. SHORING (LOCATION PURPOSES ONLY)
- WORK AREA
- REMOVAL
- TEMPORARY PAVEMENT

SIGNALS

EXISTING PROPOSED TEMPORARY

PAVEMENT MARKINGS

- EXISTING LINES
- TEMPORARY LINES

TRAFFIC CONTROL DEVICES

- BARRICADE (TYPE III)
- CONE
- DRUM SKINNY DRUM TUBULAR MARKER
- TEMPORARY CRASH CUSHION
- PORTABLE CONCRETE BARRIER (P.C.B.)
- FLASHING ARROW BOARD
- FLAGGER
- LAW ENFORCEMENT
- TRUCK MOUNTED ATTENUATOR (TMA)
- CHANGEABLE MESSAGE SIGN

TEMPORARY SIGNING

- PORTABLE SIGN
- STATIONARY SIGN
- STATIONARY OR PORTABLE SIGN

PAVEMENT MARKERS

- CRYSTAL/CRYSTAL
- CRYSTAL/RED
- YELLOW/YELLOW

PAVEMENT MARKING SYMBOLS

- PAVEMENT MARKING SYMBOLS

PAVEMENT MARKING LINES

C1	WHITE EDGELINE	TYPE 4 REMOVABLE TAPE (4")
C13	YELLOW DOUBLE CENTER	TYPE 4 REMOVABLE TAPE (4")
P1	WHITE EDGELINE	PAINT (4")
P2	WHITE SOLID LANE LINE	PAINT (4")
P4	3' - 9' SP WHITE MINISKIP	PAINT (4")
P11	YELLOW SINGLE CENTER	PAINT (4")
P12	10 FT. YELLOW SKIP	PAINT (4")
P13	YELLOW DOUBLE CENTER	PAINT (4")
P52	YELLOW DIAGONAL	PAINT (12")

PAVEMENT MARKING SYMBOLS AND CHARACTERS

P70	LEFT TURN MARKING SYMBOL	PAINT

PAVEMENT MARKERS

MH	YELLOW AND YELLOW	TEMP. RAISED
MI	CRYSTAL AND RED	TEMP. RAISED

Dewberry
2610 WYCLIFF ROAD
SUITE 410
RALEIGH, NC 27607
PHONE: 919.881.9939
NC COA No. F-0929

APPROVED: DocuSigned by: B136C648C96B4EA...
DATE: 2/18/2020
SEAL
NORTH CAROLINA PROFESSIONAL SEAL 17586 ENGINEER J. TODD BROOKS

DOCUMENT NOT CONSIDERED FINAL UNLESS ALL SIGNATURES COMPLETED

DIVISION OF HIGHWAYS · STATE OF NORTH CAROLINA · DEPARTMENT OF TRANSPORTATION · WORK ZONE TRAFFIC CONTROL

ROADWAY STANDARD DRAWINGS & LEGEND

18-FEB-2020 14:41
P:\50071432\50074880-B-4635 PH2\CAD\Civil\B-4635\Traffic\TMP\Plans\B4635_TMP_TCP IA.dgn
jwiles AT PCOU36KJ

DocuSign Envelope ID: 7DC0C792-EBE7-48D7-943B-61DCF7CB5BEE

PROJ. REFERENCE NO.	SHEET NO.
B-4635	TMP-2

MANAGEMENT STRATEGIES

THE PURPOSE OF THIS PROJECT IS TO REPLACE THE EXISTING EASTERN US 13 BRIDGE OVER THE SOUTH RIVER. TRAFFIC WILL BE MAINTAINED ON US 13 USING AN ON-SITE DETOUR AND TEMPORARY BRIDGE.

PHASE I OF THIS TRANSPORTATION MANAGEMENT PLAN CONSISTS OF CONSTRUCTING THE ON-SITE DETOUR AND DETOUR BRIDGE AWAY FROM TRAFFIC.

PHASE II OF THIS TRANSPORTATION MANAGEMENT PLAN CONSISTS OF SHIFTING US 13 TRAFFIC TO THE DETOUR AND TEMPORARY BRIDGE WHILE CONSTRUCTING THE PROPOSED BRIDGE AND ASSOCIATED ROADWAY IMPROVEMENTS.

PHASE III OF THIS TRANSPORTATION MANAGEMENT PLAN CONSISTS OF THE FOLLOWING:

1) SHIFT TRAFFIC TO THE NEW BRIDGE AND COMPLETE ANY NECESSARY TIE-IN WORK.

2) DEMOLISH THE ON-SITE DETOUR AND REMOVE THE TEMPORARY BRIDGE

3) PLACE THE FINAL LAYER OF SURFACE COURSE AND FINAL PAVEMENT MARKINGS

GENERAL NOTES

CHANGES MAY BE REQUIRED WHEN PHYSICAL DIMENSIONS IN THE DETAIL DRAWINGS, STANDARD DETAILS, AND ROADWAY DETAILS ARE NOT ATTAINABLE TO MEET FIELD CONDITIONS OR RESULT IN DUPLICATE OR UNDESIRED OVERLAPPING OF DEVICES. MODIFICATION MAY INCLUDE: MOVING, SUPPLEMENTING, COVERING, OR REMOVAL OF DEVICES AS DIRECTED BY THE ENGINEER.
THE FOLLOWING GENERAL NOTES APPLY AT ALL TIMES FOR THE DURATION OF THE CONSTRUCTION PROJECT EXCEPT WHEN OTHERWISE NOTED IN THE PLAN OR DIRECTED BY THE ENGINEER.

TIME RESTRICTIONS

A) DO NOT CLOSE OR NARROW TRAVEL LANES AS FOLLOWS:

ROAD NAME	DAY AND TIME RESTRICTIONS
US 13 (FAYETTEVILLE HIGHWAY)	MONDAY THROUGH FRIDAY 6:00 AM TO 9:00 AM & 4:00 PM TO 6:00 PM

B) DO NOT CLOSE OR NARROW TRAVEL LANES DURING HOLIDAYS AND SPECIAL EVENTS AS FOLLOWS:

ROAD NAME

US 13 (FAYETTEVILLE HIGHWAY)

HOLIDAY AND HOLIDAY WEEKEND

1. FOR ANY UNEXPECTED OCCURRENCE THAT CREATES UNUSUALLY HIGH TRAFFIC VOLUMES, AS DIRECTED BY THE ENGINEER.

2. FOR NEW YEAR'S, BETWEEN THE HOURS OF 6:00 AM DECEMBER 31st TO 6:00 PM JANUARY 2ND. IF NEW YEAR'S DAY IS ON A FRIDAY, SATURDAY, SUNDAY, OR MONDAY THEN UNTIL 6:00 PM THE FOLLOWING TUESDAY.

3. FOR EASTER, BETWEEN THE HOURS OF 6:00 AM THURSDAY AND 6:00 PM MONDAY.

4. FOR MEMORIAL DAY, BETWEEN THE HOURS OF 6:00 AM FRIDAY TO 6:00 PM TUESDAY.

5. FOR INDEPENDENCE DAY, BETWEEN THE HOURS OF 6:00 AM THE DAY BEFORE INDEPENDENCE DAY AND 6:00 PM THE DAY AFTER INDEPENDENCE DAY.

6. IF INDEPENDENCE DAY IS ON A FRIDAY, SATURDAY, SUNDAY OR MONDAY THEN BETWEEN THE HOURS OF 6:00 AM THE THURSDAY BEFORE INDEPENDENCE DAY AND 6:00 PM THE TUESDAY AFTER INDEPENDENCE DAY.

7. FOR LABOR DAY, BETWEEN THE HOURS OF 6:00 AM FRIDAY AND 6:00 PM TUESDAY.

8. FOR THANKSGIVING DAY, BETWEEN THE HOURS OF 6:00 AM TUESDAY TO 6:00 PM MONDAY.

9. FOR CHRISTMAS, BETWEEN THE HOURS OF 6:00 AM THE FRIDAY BEFORE THE WEEK OF CHRISTMAS DAY AND 6:00 PM THE FOLLOWING TUESDAY AFTER THE WEEK OF CHRISTMAS.

(CONTINUED ON TMP-2A)

Dewberry
2610 WYCLIFF ROAD
SUITE 410
RALEIGH, NC 27607
PHONE: 919.881.9939
NC COA No. F-0929

APPROVED: DocuSigned by: J. Todd Brooks
DATE: 2/18/2020
SEAL
NORTH CAROLINA PROFESSIONAL SEAL 17586 ENGINEER J. TODD BROOKS

DOCUMENT NOT CONSIDERED FINAL UNLESS ALL SIGNATURES COMPLETED

DIVISION OF HIGHWAYS · STATE OF NORTH CAROLINA · DEPARTMENT OF TRANSPORTATION · WORK ZONE TRAFFIC CONTROL

TRANSPORTATION OPERATIONS PLAN

2/18/2020 2:41:06 PM
...\TMP\Plans\B4635_TMP_TCP 2.dgn
USER: jwiles

DocuSign Envelope ID: 7DC0C792-EBE7-48D7-943B-61DCF7CB5BEE

PROJ. REFERENCE NO.	SHEET NO.
B-4635	TMP-2A

(CONTINUED FROM TMP-2)

LANE AND SHOULDER CLOSED REQUIREMENTS

C) REMOVE LANE CLOSURE DEVICES FROM THE LANE WHEN WORK IS NOT BEING PERFORMED BEHIND THE LANE CLOSURE OR WHEN A LANE CLOSURE IS NO LONGER NEEDED OR AS DIRECTED BY THE ENGINEER.

D) WHEN PERSONNEL AND/OR EQUIPMENT ARE WORKING WITHIN 15 FT OF AN OPEN TRAVEL LANE, CLOSE THE NEAREST OPEN SHOULDER USING ROADWAY STANDARD DRAWING NO. 1101.04 UNLESS THE WORK AREA IS PROTECTED BY BARRIER OR GUARDRAIL OR A LANE CLOSURE IS INSTALLED.

E) WHEN PERSONNEL AND/OR EQUIPMENT ARE WORKING ON THE SHOULDER ADJACENT TO AN UNDIVIDED FACILITY AND WITHIN 5 FT OF AN OPEN TRAVEL LANE, CLOSE THE NEAREST OPEN TRAVEL LANE USING ROADWAY STANDARD DRAWING NO. 1101.02 UNLESS THE WORK AREA IS PROTECTED BY BARRIER OR GUARDRAIL.

F) WHEN PERSONNEL AND/OR EQUIPMENT ARE WORKING WITHIN A LANE OF TRAVEL OF AN UNDIVIDED OR DIVIDED FACILITY, CLOSE THE LANE ACCORDING TO THE TRAFFIC MANAGEMENT PLANS, ROADWAYS STANDARD DRAWINGS OR AS DIRECTED BY THE ENGINEER. CONDUCT THE WORK SO THAT ALL PERSONNEL AND/OR EQUIPMENT REMAIN WITHIN THE CLOSED TRAVEL LANE.

G) DO NOT WORK SIMULTANEOUSLY WITHIN 15FT ON BOTH SIDES OF AN OPEN TRAVELWAY, RAMP, OR LOOP WITHIN THE SAME LOCATION UNLESS PROTECTED WITH GUARDRAIL OR BARRIER.

H) PROVIDE TRAFFIC CONTROL FOR APPROPRIATE LANE CLOSURES FOR SURVEYING DONE BY THE DEPARTMENT.

PAVEMENT EDGE DROP OFF REQUIREMENTS

I) BACKFILL AT 6:1 SLOPE UP TO THE EDGE AND ELEVATION OF EXISTING PAVEMENT IN AREAS ADJACENT TO AN OPENED TRAVEL LANE THAT HAS AN EDGE OF PAVEMENT DROP-OFF AS FOLLOWS:

- BACKFILL DROP-OFFS THAT EXCEED 2 INCHES ON ROADWAYS WITH POSTED SPEED LIMITS OF 45 MPH OR GREATER.
- BACKFILL DROP-OFFS THAT EXCEED 3 INCHES ON ROADWAYS WITH POSTED SPEED LIMITS LESS THAN 45 MPH
- BACKFILL WITH SUITABLE COMPACTED MATERIAL, AS APPROVED BY THE ENGINEER, AT NO EXPENSE TO THE DEPARTMENT.

J) DO NOT EXCEED A DIFFERENCE OF 2 INCHES IN ELEVATION BETWEEN OPEN LANES OF TRAFFIC FOR NOMINAL LIFTS OF 1.5 INCHES. INSTALL ADVANCE WARNING 'UNEVEN LANES' SIGNS (W8-11) 500 FT IN ADVANCE AND A MINIMUM OF EVERY HALF MILE THROUGHOUT THE UNEVEN AREA.

K) FOR PAVING OVERLAYS OF 3″ OR GREATER THAT CREATE A DROP-OFF ADJACENT TO THE MEDIAN SHOULDER, INSTALL ″LOW/SOFT SHOULDER″ (SP 13107) SIGNS ON THE MEDIAN SHOULDER. PLACE INITIALLY AT THE CONSTRUCTION LIMITS, AND THEN SPACE 1 MILE THEREAFTER. NO SIGNING REQUIRED FOR THE OUTSIDE SHOULDER.

TRAFFIC PATTERN ALTERATIONS

L) NOTIFY THE ENGINEER THIRTY (30) CALENDAR DAYS PRIOR TO ANY TRAFFIC PATTERN ALTERATION.

SIGNING

M) INSTALL ADVANCE WORK ZONE WARNING SIGNS WHEN WORK IS WITHIN 40 FT FROM THE EDGE OF TRAVEL LANE AND NO MORE THAN THREE (3) DAYS PRIOR TO THE BEGINNING OF CONSTRUCTION.

N) ENSURE ALL NECESSARY SIGNING IS IN PLACE PRIOR TO ALTERING ANY TRAFFIC PATTERNS.

O) INSTALL BLACK ON ORANGE 'DIP' SIGNS (W8-2) AND/OR BUMP SIGNS (W8-1) 500 FT IN ADVANCE OF THE UNEVEN AREA OR AS DIRECTED BY THE ENGINEER.

TRAFFIC BARRIER

P) INSTALL TEMPORARY BARRIER ACCORDING TO THE TRANSPORTATION MANAGEMENT PLANS A MAXIMUM OF TWO (2) WEEKS PRIOR TO BEGINNING WORK IN ANY LOACTAION. ONCE TEMPORARY BARRIER IS INSTALLED AT ANY LOCATION PROCEED IN A CONTINUOUS MANNER TO COMPLETE THE PROPOSED WORK IN THAT LOCATION UNLESS OTHERWISE STATED IN THE TRANSPORTATION MANAGEMENT PLANS OR AS DIRECTED BY THE ENGINEER.

DO NOT PLACE BARRIER DIRECTLY ON ANY SURFACE OTHER THAN ASPHALT OR CONCRETE.

ONCE TEMPORARY BARRIER IS INSTALLED AT ANY LOCATION AND NO WORK IS PERFORMED BEHIND THE TEMPORARY BARRIER FOR A PERIOD LONGER THAN TWO (2) MONTHS, REMOVE/RESET TEMPORARY BARRIER AT NO COST TO THE DEPARTMENT UNLESS OTHERWISE STATED IN THE TRANSPORTATION MANAGEMENT PLANS, TEMPORARY BARRIER IS PROTECTING A HAZARD, OR AS DIRECTED BY THE ENGINEER.

INSTALL TEMPORARY BARRIER WITH THE TRAFFIC FLOW BEGINNING WITH THE UPSTREAM SIDE OF TRAFFIC. REMOVE TEMPORARY BARRIER AGAINST THE TRAFFIC FLOW BEGINNING WITH THE DOWNSTREAM SIDE OF TRAFFIC.

INSTALL AND SPACE DRUMS NO GREATER THAN TWICE THE POSTED SPEED LIMIT (MPH)TO CLOSE OR KEEP THE SECTION OF ROADWAY CLOSED UNTIL THE TEMPORARY BARRIER CAN BE PLACED OR AFTER THE TEMPORARY BARRIER IS REMOVED.

Q) PROTECT THE APPROACH END OF MOVEABLE/PORTABLE CONCRETE BARRIER AT ALL TIMES DURING THE INSTALLATION AND REMOVAL OF THE BARRIER BY EITHER A TRUCK MOUNTED ATTENUATOR (MAXIMUM 72 HOURS) OR A TEMPORARY CRASH CUSHION

PROTECT THE APPROACH END OF MOVABLE/PORTABLE CONCRETE BARRIER FROM ONCOMING TRAFFIC AT ALL TIMES BY A TEMPORARY CRASH CUSHION UNLESS THE APPROACH END OF MOVEABLE/PORTABLE CONCRETE BARRIER IS OFFSET FROM TRAFFIC AS FOLLOWS OR AS SHOWN IN THE PLANS: (SEE ALSO 1101.05)

POSTED SPEED LIMIT	MINIMUM OFFSET
40 OR LESS	15 FT
45-50	20 FT
55	25 FT
60 MPH OR HIGHER	30 FT

TRAFFIC CONTROL DEVICES

R) WHEN LANE CLOSURES ARE NOT IN EFFECT, SPACE CHANNELIZING DEVICES IN WORK AREAS NO GREATER IN FEET THAN TWICE THE POSTED SPEED LIMIT (MPH) EXCEPT, 10 FT ON-CENTER IN RADII, AND 3 FT OFF THE EDGE OF AN OPEN TRAVELWAY. REFER TO STANDARD SPECIFICATIONS FOR ROADS AND STRUCTURES SECTIONS 1130 (DRUMS), 1135 (CONES), AND 1180 (SKINNY DRUMS) FOR ADDITIONAL REQUIREMENTS.

S) PLACE TYPE III BARRICADES, WITH ″ROAD CLOSED″ SIGN R11-2 ATTACHED, OF SUFFICIENT LENGTH TO CLOSE ENTIRE ROADWAY.

(CONTINUED ON TMP-2B)

Dewberry
2610 WYCLIFF ROAD
SUITE 410
RALEIGH, NC 27607
PHONE: 919.881.9939
NC COA No. F-0929

APPROVED: DocuSigned by: J. Todd Brooks 9190C64C6B84EA...
DATE: 2/18/2020
SEAL

NORTH CAROLINA PROFESSIONAL SEAL 17586 ENGINEER J. TODD BROOKS

DOCUMENT NOT CONSIDERED FINAL UNLESS ALL SIGNATURES COMPLETED

DIVISION OF HIGHWAYS · STATE OF NORTH CAROLINA · DEPARTMENT OF TRANSPORTATION · WORK ZONE TRAFFIC CONTROL

TRANSPORTATION OPERATIONS PLAN

2/18/2020 2:41:08 PM
\\TMP\Plans\B4635_TMP_TCP 2.dgn
USER: jwiles

DocuSign Envelope ID: 7DC0C792-EBE7-48D7-943B-61DCF7CB5BEE

(CONTINUED FROM TMP-2A)

PAVEMENT MARKINGS AND MARKERS

T) INSTALL PAVEMENT MARKINGS AND PAVEMENT MARKERS ON THE FINAL SURFACE. REVIEW AND RECORD THE EXISTING PAVEMENT MARKINGS AND MARKERS BEFORE OBLITERATION. RE-ESTABLISH THE NEW PAVEMENT MARKINGS AND MARKERS USING THE RECORD OF EXISTING MARKINGS IN CONJUNCTION WITH THE 2018 ROADWAY STANDARD DRAWINGS UNLESS OTHERWISE DIRECTED BY THE ENGINEER. SUBMIT THE RECORD OF THE EXISTING PAVEMENT MARKINGS SEVEN CALENDAR DAYS BEFORE THE OBLITERATION OF ANY PAVEMENT MARKINGS.

U) INSTALL TEMPORARY PAVEMENT MARKINGS AND TEMPORARY PAVEMENT MARKERS ON INTERIM LAYERS OF PAVEMENT AS FOLLOWS:

ROAD NAME	MARKERS	MARKINGS/SYMBOLS
US 13 (FAYETTEVILLE HIGHWAY)	TEMPORARY RAISED	PAINT
US 13 BRIDGE OVER SOUTH RIVER	TEMPORARY RAISED	TYPE 4 REMOVABLE TAPE

V) PLACE ONE APPLICATION OF PAINT FOR TEMPORARY TRAFFIC PATTERNS. PLACE A SECOND APPLICATION OF PAINT SIX (6)MONTHS AFTER THE INITIAL APPLICATION AND EVERY SIX MONTHS AS DIRECTED BY THE ENGINEER.

W) TIE PROPOSED PAVEMENT MARKING LINES TO EXISTING PAVEMENT MARKING LINES.

X) REMOVE/REPLACE ANY CONFLICTING/DAMAGED PAVEMENT MARKINGS AND MARKERS BY THE END OF EACH DAY'S OPERATIONS.

MISCELLANEOUS

Y) IN THE EVENT A TIE-IN CANNOT BE MADE IN ONE DAY'S TIME, BRING THE TIE-IN AREA TO AN APPROPRIATE ROADWAY ELEVATION AS DETERMINED BY THE ENGINEER.

Dewberry
2610 WYCLIFF ROAD
SUITE 410
RALEIGH, NC 27607
PHONE: 919.881.9939
NC COA No. F-0929

APPROVED: DocuSigned by: J. Todd Brooks B13DC040C0084EA...
DATE: 2/18/2020
SEAL
NORTH CAROLINA PROFESSIONAL SEAL 17586 ENGINEER J. TODD BROOKS

DOCUMENT NOT CONSIDERED FINAL UNLESS ALL SIGNATURES COMPLETED

DIVISION OF HIGHWAYS · STATE OF NORTH CAROLINA · DEPARTMENT OF TRANSPORTATION · WORK ZONE TRAFFIC CONTROL

TRANSPORTATION OPERATIONS PLAN

2/18/2020 2:41:09 PM
...\TMP\Plans\B4635_TMP_TCP 2.dgn
USER: jwiles

DocuSign Envelope ID: 7DC0C792-EBE7-48D7-943B-61DCF7CB5BEE

PROJ. REFERENCE NO.	SHEET NO.
B-4635	TMP-2C

TEMPORARY SHORING NOTES

SHORING LOCATION NO. 1

FOR TEMPORARY SHORING AND POSITIVE PROTECTION FOR TEMPORARY SHORING, SEE PLANS AND TEMPORARY SHORING PROVISION.

BEFORE BEGINNING TEMPORARY SHORING DESIGN OR CONSTRUCTION, SURVEY EXISTING GROUND ELEVATIONS IN THE VICINITY OF SHORING LOCATIONS TO DETERMINE ACTUAL SHORING HEIGHTS.

DESIGN TEMPORARY SHORING FROM STATION -L- 20+50 +/-, 26.07 FT +/- RIGHT, TO STATION -L- 22+50 +/-, 25.08 FT +/- RIGHT, FOR THE FOLLOWING ASSUMED SOIL PARAMETERS AND GROUNDWATER ELEVATION:

UNIT WEIGHT (γ) = 120 LB/CF
FRICTION ANGLE (ϕ) = 30 DEGREES
COHESION (c) = 0 LB/SF
GROUNDWATER ELEVATION = 111′ +/-

DO NOT USE A TEMPORARY WALL FOR TEMPORARY SHORING FROM STATION -L- 20+50 +/-, 26.07 FT +/- RIGHT, TO STATION -L- 22+50 +/-, 25.08 FT +/- RIGHT.

AT THE CONTRACTOR'S OPTION, USE STANDARD TEMPORARY SHORING FOR TEMPORARY SHORING FROM STATION -L- 20+50 +/-, 26.07 FT +/- RIGHT, TO STATION -L- 22+50 +/-, 25.08 FT +/- RIGHT. SEE GEOTECHNICAL STANDARD DETAIL NO. 1801.01 FOR STANDARD TEMPORARY SHORING.

SEE SHEET TMP-4 FOR CORRESPONDING TRANSPORTATION MANAGEMENT PLAN SHEET

THE TEMPORARY SHORING NOTES SHOWN ON THIS SHEET WERE PROVIDED THROUGH A SEALED DOCUMENT FROM THE GEOTECHNICAL ENGINEERING UNIT. THE DOCUMENT WAS SUBMITTED TO THE WZTC SECTION ON SEPTEMBER 25, 2019 AND SEALED BY A PROFESSIONAL ENGINEER, JINYOUNG PARK, PhD., P.E., LICENSE # 032171.

Dewberry
2610 WYCLIFF ROAD
SUITE 410
RALEIGH, NC 27607
PHONE: 919.881.9939
NC COA No. F-0929

APPROVED: DocuSigned by: J. Todd Brooks 913BC0A8BC9B4EA...
DATE: 2/18/2020
SEAL

NORTH CAROLINA PROFESSIONAL SEAL 17586 ENGINEER J. TODD BROOKS

DOCUMENT NOT CONSIDERED FINAL UNLESS ALL SIGNATURES COMPLETED

DIVISION OF HIGHWAYS · STATE OF NORTH CAROLINA · DEPARTMENT OF TRANSPORTATION · WORK ZONE TRAFFIC CONTROL

SHORING DATA

2/18/2020 2:41:11 PM
...\TMP\Plans\B4635_TMP_TCP 2c.dgn
USER: jwiles

DocuSign Envelope ID: 7DC0C792-EBE7-48D7-943B-61DCF7CB5BEE

PROJ. REFERENCE NO.	SHEET NO.
B-4635	TMP-3

PHASING

PHASE I

STEP 1: USING RSD NO. 1101.01, SHEET 3 OF 3, INSTALL WORK ZONE ADVANCE WARNING SIGNS ON -L- (US 13 / FAYETTEVILLE HIGHWAY) AND PAGE ROAD. UNDER THE DIRECTION OF THE ENGINEER, SUPPLEMENT THE ADVANCE WARNING SIGNS ON PAGE ROAD WITH EITHER "NEXT RIGHT" (SP-4R) OR "NEXT LEFT" (SP-4L) SUPPLEMENTAL SIGN PANELS.

STEP 2: USING RSD 1101.02, SHEET 1 OF 14, AND TMP-13, EXTEND THE EXISTING US 13 EASTBOUND GUARDRAIL AS SHOWN ON SHEET TMP-4 USING FLAGGERS AND ALTERNATE LANE CLOSURES.

STEP 3: MAINTAIN EXISTING TRAFFIC PATTERN ON -L- (US 13). PERFORM THE FOLLOWING AS SHOWN ON SHEET TMP-4:

- INSTALL TEMPORARY SHORING FROM -L- STA. 20+50 TO -L- STA. 22+50 BEFORE BEGINNING CONSTRUCTION OF -DETL-. WHEN SHORING INSTALLATION ENCROACHES UPON EXISTING US 13 TRAVEL LANES, USE FLAGGERS AND ALTERNATE LANE CLOSURES AS PER RSD 1101.02, SHEET 1 OF 14, AND SHEET TMP-13.

- CONSTRUCT -DETL- AND THE ASSOCIATED DETOUR BRIDGE OVER SOUTH RIVER. WHEN THE CONSTRUCTION OF -DETL- ENCROACHES UPON EXISTING US 13 TRAVEL LANES, USE FLAGGERS AND ALTERNATE LANE CLOSURES AS PER RSD 1101.02, SHEET 1 OF 14, AND SHEET TMP-13 TO TIE -DETL- TO THE EDGE AND ELEVATION OF EXISTING -L-. PLACE TEMPORARY PAINT PAVEMENT MARKINGS ON -DETL- FROM -DETL- STA. 13+00 +/- TO -DETL- STA. 23+51 +/-. SEE SHEETS TMP-6 AND TMP-7.

PHASE II

THE CONTRACTOR SHALL NOTIFY THE ENGINEER TWENTY-ONE (21) CALENDAR DAYS PRIOR TO THE TRAFFIC SHIFT.

STEP 1: REFER TO RSD 1101.02, SHEET 1 OF 14, AND SHEET TMP-13 FOR FLAGGING OPERATIONS AND ALTERNATE LANE CLOSURES AS NEEDED. USING TEMPORARY PAINT PAVEMENT MARKINGS, CREATE A NO PASSING ZONE FROM APPROXIMATELY 423′ EAST OF NC 82 (GODWIN-FALCON RD.) TO -DETL- STA. 10+00 +/- AS SHOWN ON SHEETS TMP-5 AND TMP-6.

STEP 2: PERFORM THE FOLLOWING UNDER THE DIRECTION OF THE ENGINEER DURING A SINGLE WORK PERIOD TO SHIFT TRAFFIC INTO THE PHASE II TRAFFIC PATTERN AS SHOWN ON SHEETS TMP-6 AND TMP-7:

- REFER TO RSD 1101.02, SHEET 1 OF 14, AND SHEET TMP-13 FOR FLAGGING OPERATIONS AND ALTERNATE LANE CLOSURES AS NEEDED.

- PERFORM THE FOLLOWING SIMULTANEOUSLY WHILE MAINTAINING WESTBOUND TRAFFIC ON EXISTING -L-:
  * USING DRUMS AS SHOWN IN INSET ′1′ ON SHEET TMP-6, SHIFT EASTBOUND TRAFFIC TO THE EASTBOUND LANES OF -DETL-. PLACE TEMPORARY PAINTED DOUBLE YELLOW CENTER LINE AND EASTBOUND WHITE EDGELINE FROM -DETL- STA. 10+00 +/- TO -DETL- STA. 13+00 +/- AS SHOWN ON SHEET TMP-6.
  * USING DRUMS AS SHOWN IN INSET ′2′ ON SHEET TMP-7, SHIFT EASTBOUND TRAFFIC FROM -DETL- BACK TO EXISTING US 13. PLACE TEMPORARY PAINTED CENTER LINE FROM -DETL- STA. 23+51 +/- TO -DETL- STA. 25+38 +/- AS SHOWN IN INSET ′2′ ON SHEET TMP-7.

PHASE II, STEP 2 - CONT.

- ONCE EASTBOUND TRAFFIC IS SHIFTED TO -DETL- AND TEMPORARY PAINTED CENTER LINES ARE PLACED AS PER INSETS ′1′ & ′2′ ON SHEETS TMP-6 & TMP-7, SHIFT WESTBOUND TRAFFIC TO -DETL-. REVISE THE REMAINDER OF THE PAVEMENT MARKINGS TO THE PHASE II TEMPORARY TRAFFIC PATTERN AS SHOWN ON SHEETS TMP-6 AND TMP-7. USE FLAGGERS TO MAINTAIN TRAFFIC ON US 13 DURING THESE MARKING REVISIONS. PLACE WARNING SIGNS W24-1L AND W24-1R AND INSTALL DRUMS AND BARRICADES.

STEP 3: CONSTRUCT PROPOSED -L- AND THE PROPOSED BRIDGE OVER SOUTH RIVER AS FOLLOWS:

- CONSTRUCT THE WESTBOUND SIDE SLOPES AND ASSOCIATED EXCAVATION AS PER THE ROADWAY PLANS AND CROSS SECTIONS. SEE SHEETS TMP-6 AND TMP-7.

- CONSTRUCT THE PROPOSED SOUTH RIVER BRIDGE AS SHOWN ON SHEET TMP-6.

- CONSTRUCT THE PROPOSED WESTBOUND LANE FROM -L- STA. 15+30 +/- TO -L- STA. 16+30 +/- UP TO BUT NOT INCLUDING THE FINAL LAYER OF SURFACE COURSE AS SHOWN ON SHEET TMP-6.

- CONSTRUCT THE PROPOSED EASTBOUND AND WESTBOUND LANES PLUS 4′ (MIN.) OF THE PROPOSED EASTBOUND SHOULDER FROM -L- STA. 16+30 +/- TO -L- STA. 18+59 +/- UP TO BUT NOT INCLUDING THE FINAL LAYER OF SURFACE COURSE. SEE SHEET TMP-6. WHEN THIS CONSTRUCTION ENCROACHES UPON THE TRAVEL LANES, USE FLAGGERS AND ALTERNATE LANE CLOSURES AS PER RSD 1101.02, SHEET 1 OF 14, AND SHEET TMP-13.

- CONSTRUCT THE PROPOSED EASTBOUND AND WESTBOUND LANES OF -L- FROM STA. 21+02 +/- TO STA. 24+25 +/- (END OF PROPOSED GRADE) UP TO BUT NOT INCLUDING THE FINAL LAYER OF SURFACE COURSE. SEE SHEETS TMP-6 AND TMP-7. THIS INCLUDES THE FULL EASTBOUND SHOULDER AND GUARDRAIL AS ILLUSTRATED IN CUT SECTION C-C ON SHEET TMP-6.

PHASE III

THE CONTRACTOR SHALL NOTIFY THE ENGINEER TWENTY-ONE (21) CALENDAR DAYS PRIOR TO THE TRAFFIC SHIFT.

STEP 1: REFER TO SHEETS TMP-8 & TMP-9 AND PERFORM THE FOLLOWING WHILE MAINTAINING TRAFFIC IN THE PHASE II PATTERN:

- REFER TO RSD 1101.02, SHEET 1 OF 14, AND SHEET TMP-13 FOR FLAGGING OPERATIONS AND ALTERNATE LANE CLOSURES AS NEEDED.

- WHILE MAINTAINING TRAFFIC IN THE PHASE II PATTERN, PLACE TEMPORARY PAVEMENT MARKINGS ON -L- FROM STA. 16+30 +/- TO STA. 24+25 +/- AS SHOWN ON SHEETS TMP-8 AND TMP-9.

(CONTINUED ON TMP-3A)

Dewberry
2610 WYCLIFF ROAD
SUITE 410
RALEIGH, NC 27607
PHONE: 919.881.9939
NC COA No. F-0929

APPROVED: DocuSigned by: J. Todd Brooks B13DC646C9E84EA...

DATE: 2/18/2020

SEAL

NORTH CAROLINA PROFESSIONAL SEAL 17586 ENGINEER J. TODD BROOKS

DIVISION OF HIGHWAYS · STATE OF NORTH CAROLINA · DEPARTMENT OF TRANSPORTATION · WORK ZONE TRAFFIC CONTROL

DOCUMENT NOT CONSIDERED FINAL UNLESS ALL SIGNATURES COMPLETED

PHASING

2/18/2020 2:4H3 PM
...\TMP\Plans\B4635_TMP_TCP 3.dgn
USER: jwiles

DocuSign Envelope ID: 7DC0C792-EBE7-48D7-943B-61DCF7CB5BEE

PROJ. REFERENCE NO.	SHEET NO.
B-4635	TMP-3A

PHASING

(CONTINUED FROM TMP-3)

PHASE III - CONT.

STEP 2: PERFORM THE FOLLOWING UNDER THE DIRECTION OF THE ENGINEER DURING A SINGLE WORK PERIOD TO SHIFT TRAFFIC INTO THE PHASE III TRAFFIC PATTERN AS SHOWN ON SHEETS TMP-8 AND TMP-9:

USING DRUMS AS SHOWN IN INSETS '3' AND '4' ON SHEETS TMP-8 AND TMP-9, SHIFT WESTBOUND TRAFFIC TO THE NEWLY CONSTRUCTED WESTBOUND LANE OF -L-. PLACE TEMPORARY PAINTED DOUBLE YELLOW CENTER LINES AND WESTBOUND WHITE EDGELINES AS SHOWN IN INSETS '3' AND '4' ONCE WESTBOUND TRAFFIC HAS BEEN SHIFTED TO -L-. REVISE THE REMAINDER OF THE PAVEMENT MARKINGS TO THE PHASE III TEMPORARY TRAFFIC PATTERN AS SHOWN ON SHEETS TMP-8 AND TMP-9. USE FLAGGERS PER RSD 1101.02, SHEET 1 OF 14 AND TMP-13 TO MAINTAIN TRAFFIC ON US 13 DURING THESE MARKING REVISIONS.

STEP 3: WITH TRAFFIC IN THE PHASE III PATTERN AS SHOWN ON SHEETS TMP-8 AND TMP-9, PLACE ANCHORED PORTABLE CONCRETE BARRIER FROM -DETL- STA. 13+50 +/- TO -DETL- STA. 15+90 +/- AS SHOWN ON SHEET TMP-8.

STEP 4: CONSTRUCT THE REMAINDER OF THE EASTBOUND PROPOSED SHOULDER FROM -L- STA. 16+30 +/- TO THE BRIDGE UP TO BUT NOT INCLUDING THE FINAL LAYER OF SURFACE COURSE. AS SHOWN ON SHEET TMP-8, INSTALL THE EASTBOUND PROPOSED GUARDRAIL FROM -L- STA. 16+67 +/- TO THE BRIDGE.

PHASE IV

STEP 1: REFER TO RSD 1101.02, SHEET 1 OF 14, AND SHEET TMP-13 FOR FLAGGING OPERATIONS AND ALTERNATE LANE CLOSURES AS NEEDED. USING TEMPORARY PAINT PAVEMENT MARKINGS, RESTORE PASSING ZONE MARKINGS TO THEIR ORIGINAL CONDITION FROM APPROXIMATELY 423' EAST OF NC 82 (GODWIN-FALCON RD.) TO -L- STA. 12+21 +/- AS SHOWN ON SHEETS TMP-10 AND TMP-11.

STEP 2: MAINTAIN WESTBOUND TRAFFIC IN ITS PHASE III PATTERN ON -L-. REFER TO RSD 1101.02, SHEET 1 OF 14, AND SHEET TMP-13 FOR FLAGGING OPERATIONS AND ALTERNATE LANE CLOSURES AS NEEDED. SHIFT EASTBOUND TRAFFIC FROM -DETL- TO -L- AS SHOWN ON SHEETS TMP-11 AND TMP-12. ONCE EASTBOUND TRAFFIC IS SHIFTED TO -L-, PLACE TEMPORARY MARKINGS FROM -L- STA. 12+21 +/- TO -L- STA. 16+30 +/- AND FROM -L- STA. 24+25 +/- TO -L- STA. 28+60 +/- AS SHOWN ON SHEETS TMP-11 AND TMP-12.

STEP 3: USING FLAGGERS AND ALTERNATE LANE CLOSURES AS PER RSD 1101.02, SHEET 1 OF 14, AND SHEET TMP-13, PERFORM THE FOLLOWING:

- PROPOSED MILLING AND OVERLAY OF THE EASTBOUND LANE FROM -L- STA. 12+21 +/- TO -L- STA. 14+80 +/-. SEE TMP-11.

- PROPOSED MILLING AND OVERLAY OF THE EASTBOUND LANE FROM -L- STA. 24+25 +/- TO -L- STA. 28+60 +/-. SEE TMP-12.

PHASE IV, STEP 3 - CONT:

- BRING EASTBOUND -L- UP TO FINAL GRADE FROM -L- STA. 14+80 +/- TO -L- STA. 16+29 +/- UP TO BUT NOT INCLUDING THE FINAL LAYER OF SURFACE COURSE. SEE TMP-11.

- BRING WESTBOUND -L- UP TO FINAL GRADE FROM -L- STA. 14+80 +/- TO -L- STA. 15+30 +/- UP TO BUT NOT INCLUDING THE FINAL LAYER OF SURFACE COURSE. SEE TMP-11.

- REPLACE ANY PAVEMENT MARKINGS OBLITERATED BY EACH DAYS OPERATION PRIOR TO REOPENING US 13 TO TWO-LANE, TWO-WAY TRAFFIC AS PER SHEETS TMP-11 AND TMP-12.

STEP 4: COMPLETE REMOVAL OF -DETL- AND ITS ASSOCIATED BRIDGE OVER SOUTH RIVER. COMPLETE ALL OF THE SIDE SLOPE AND EXCAVATION WORK ALONG -L- ON THE SOUTH SIDE OF THE ROAD.

STEP 5: USING RSD 1101.02, SHEET 1 OF 14, AND SHEET TMP-13, PLACE THE FINAL LAYER OF SURFACE COURSE AND FINAL PAVEMENT MARKINGS AS PER THE PAVEMENT MARKING PLAN.

STEP 6: REMOVE ANY REMAINING TEMPORARY TRAFFIC CONTROL DEVICES AND BARRICADES.

Dewberry
2610 WYCLIFF ROAD
SUITE 410
RALEIGH, NC 27607
PHONE: 919.881.9939
NC COA No. F-0929

APPROVED: DocuSigned by: J. Todd Brooks B136C848C0E84EA...
DATE: 2/18/2020
SEAL

NORTH CAROLINA PROFESSIONAL SEAL 17586 ENGINEER J. TODD BROOKS

DOCUMENT NOT CONSIDERED FINAL UNLESS ALL SIGNATURES COMPLETED

DIVISION OF HIGHWAYS · STATE OF NORTH CAROLINA · DEPARTMENT OF TRANSPORTATION · WORK ZONE TRAFFIC CONTROL

PHASING

2/18/2020 2:41:5 PM
...\TMP\Plans\B4635_TMP_TCP 3.dgn
USER: jwiles

DocuSign Envelope ID: 7DC0C792-EBE7-48D7-943B-61DCF7CB5BEE

PROJ. REFERENCE NO.	SHEET NO.
B-4635	TMP-4

ALL PAVEMENT MARKINGS ARE EXISTING UNLESS NOTED OTHERWISE

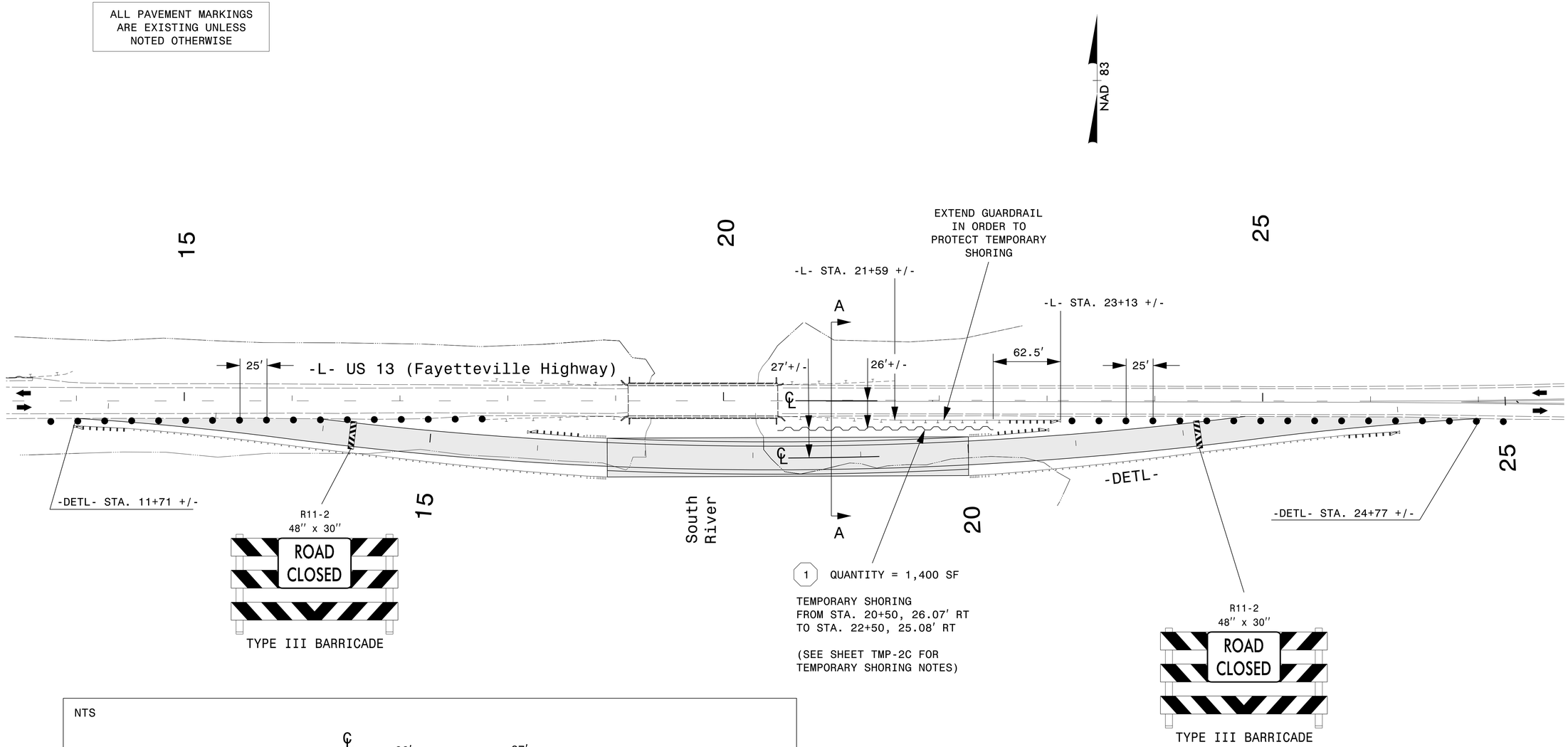

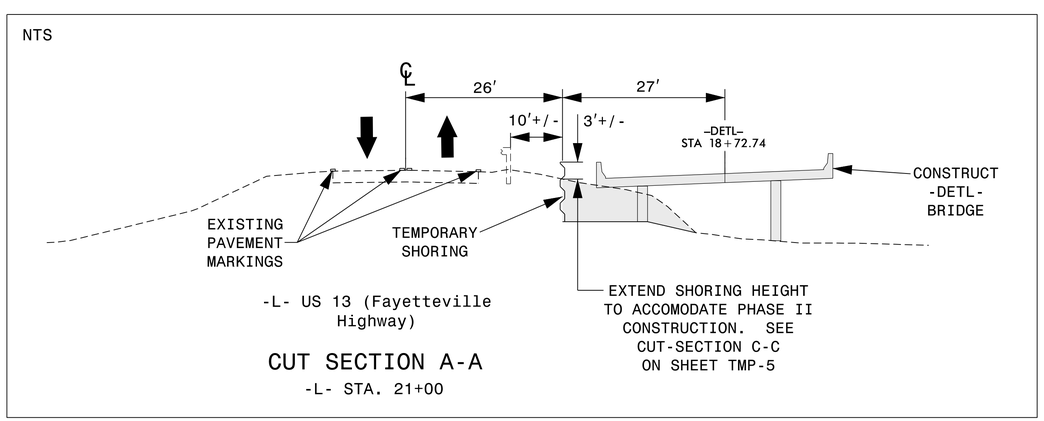

CUT SECTION A-A
-L- STA. 21+00

Dewberry
2610 WYCLIFF ROAD
SUITE 410
RALEIGH, NC 27607
PHONE: 919.881.9939
NC COA No. F-0929

APPROVED: DocuSigned by: J. Todd Brooks
B120C848C98B4EA...
DATE: 2/18/2020
SEAL
NORTH CAROLINA PROFESSIONAL SEAL 17586 ENGINEER J. TODD BROOKS

DOCUMENT NOT CONSIDERED FINAL UNLESS ALL SIGNATURES COMPLETED

DIVISION OF HIGHWAYS
STATE OF NORTH CAROLINA
DEPARTMENT OF TRANSPORTATION
WORK ZONE TRAFFIC CONTROL

PHASE I DETAIL

18-FEB-2020 14:41
P:\50071432\50074880-B-4635 PH2\CAD\Civil\B-4635\Traffic\TMP\Plans\B4635_TMP_TCP 4.dgn
jwiles AT PCOU36KJ

DocuSign Envelope ID: 7DC0C792-EBE7-48D7-943B-61DCF7CB5BEE

PROJ. REFERENCE NO.	SHEET NO.
B-4635	TMP-5

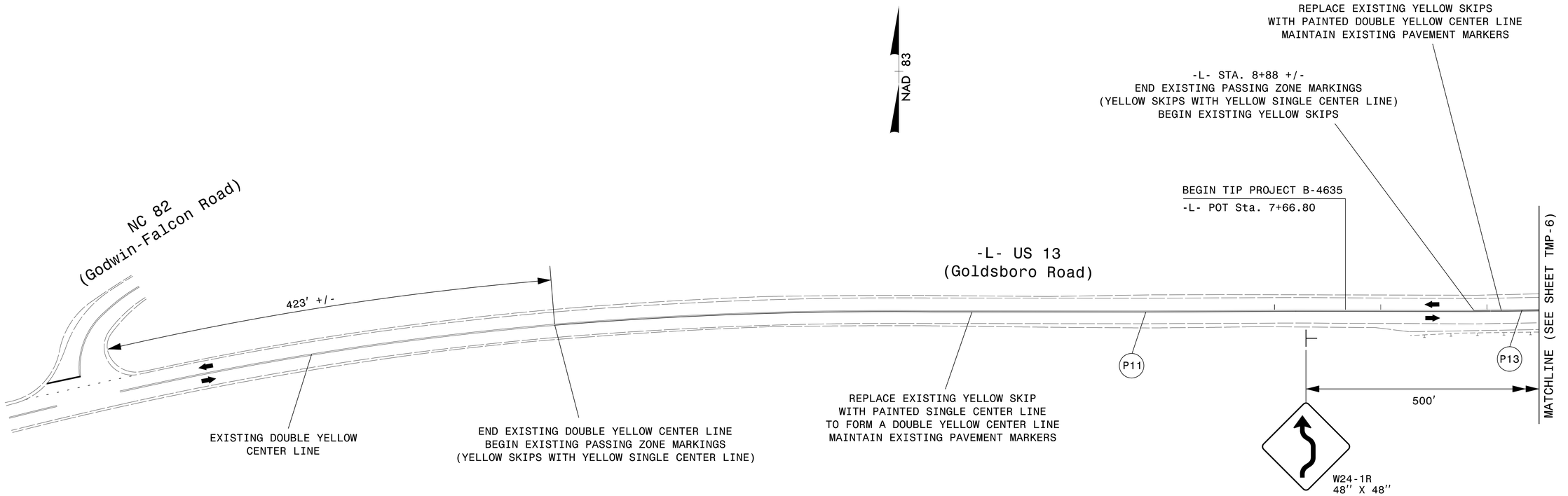

TEMPORARY PAVEMENT MARKING

PAVEMENT MARKING LINES

P11	YELLOW SINGLE CENTER	PAINT (4")
P13	YELLOW DOUBLE CENTER	PAINT (4")

Dewberry
2610 WYCLIFF ROAD
SUITE 410
RALEIGH, NC 27607
PHONE: 919.881.9939
NC COA No. F-0929

APPROVED: DocuSigned by: J. Todd Brooks
DATE: 2/18/2020

SEAL

NORTH CAROLINA PROFESSIONAL SEAL 17586 ENGINEER J. TODD BROOKS

DOCUMENT NOT CONSIDERED FINAL UNLESS ALL SIGNATURES COMPLETED

DIVISION OF HIGHWAYS · STATE OF NORTH CAROLINA · DEPARTMENT OF TRANSPORTATION · WORK ZONE TRAFFIC CONTROL

PHASE II DETAIL

2/18/2020 2:41:19 PM
...\TMP\Plans\B4635_TMP_TCP 5.dgn
USER: jwiles

DocuSign Envelope ID: 7DC0C792-EBE7-48D7-943B-61DCF7CB5BEE

PROJ. REFERENCE NO.	SHEET NO.
B-4635	TMP-6

TEMPORARY PAVEMENT MARKING

PAVEMENT MARKING LINES

C13	YELLOW DOUBLE CENTER	TYPE 4 REMOVABLE TAPE (4″)
P1	WHITE EDGELINE	PAINT (4″)
P13	YELLOW DOUBLE CENTER	PAINT (4″)

PAVEMENT MARKERS

MH	YELLOW AND YELLOW	TEMP. RAISED

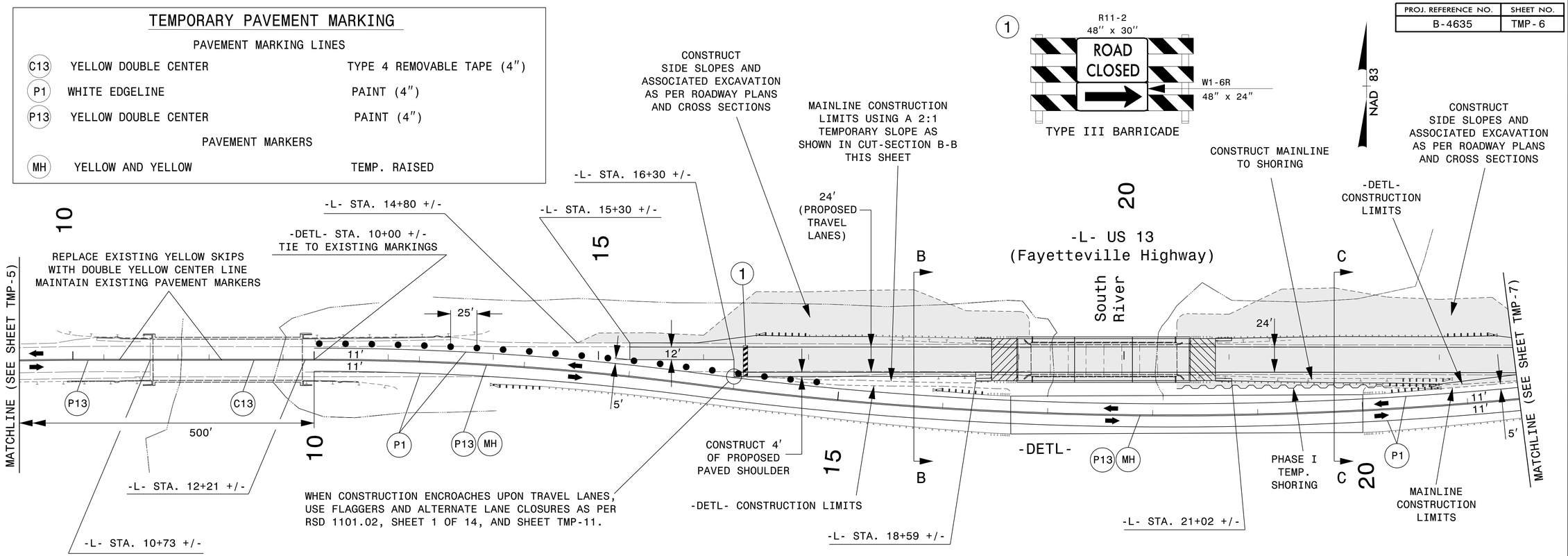

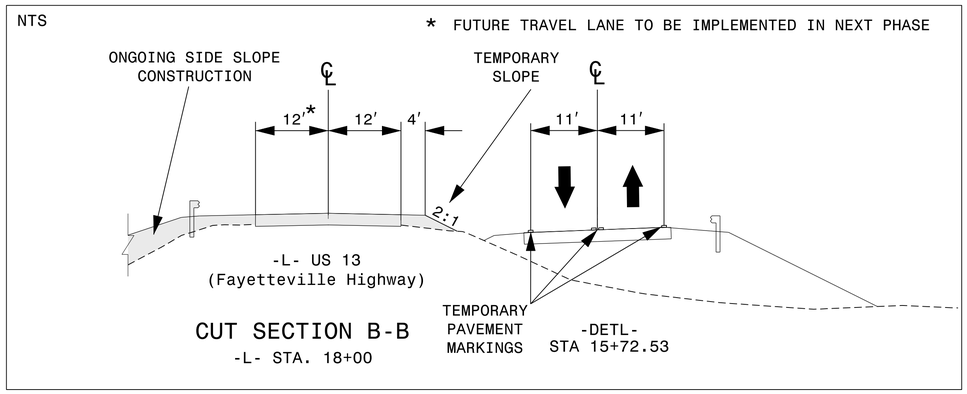

CUT SECTION B-B
-L- STA. 18+00

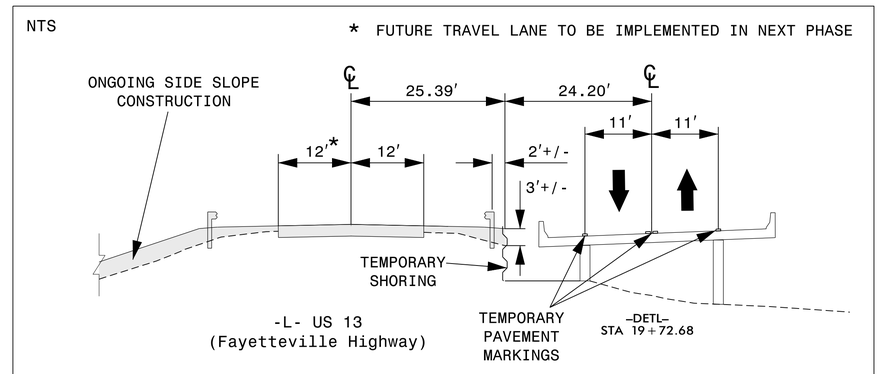

CUT SECTION C-C
-L- STA. 22+00

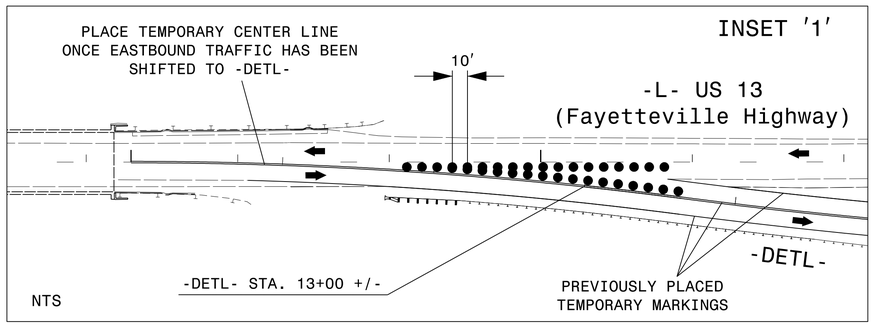

Dewberry
2610 WYCLIFF ROAD
SUITE 410
RALEIGH, NC 27607
PHONE: 919.881.9939
NC COA No. F-0929

APPROVED: DocuSigned by: J. Todd Brooks 9180548C6B6A4BA...
DATE: 2/18/2020
SEAL

NORTH CAROLINA PROFESSIONAL SEAL 17586 ENGINEER J. TODD BROOKS

DOCUMENT NOT CONSIDERED FINAL UNLESS ALL SIGNATURES COMPLETED

DIVISION OF HIGHWAYS · STATE OF NORTH CAROLINA · DEPARTMENT OF TRANSPORTATION · WORK ZONE TRAFFIC CONTROL

PHASE II DETAIL

2/18/2020 2:42:2 PM
...\TMP\Plans\B4635_TMP_TCP 6.dgn
USER: jwiles

DocuSign Envelope ID: 7DC0C792-EBE7-48D7-943B-61DCF7CB5BEE

PROJ. REFERENCE NO.	SHEET NO.
B-4635	TMP-7

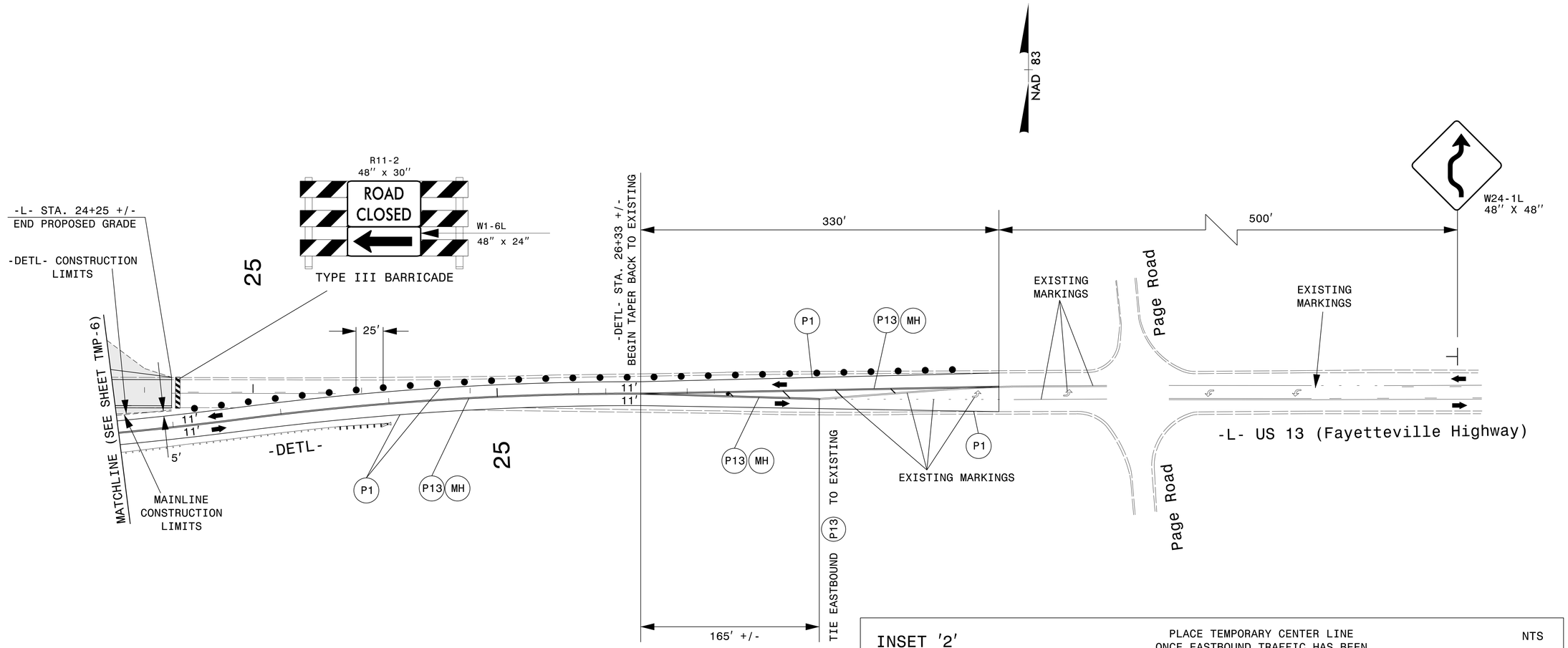

TEMPORARY PAVEMENT MARKING

PAVEMENT MARKING LINES

P1	WHITE EDGELINE	PAINT (4")
P13	YELLOW DOUBLE CENTER	PAINT (4")

PAVEMENT MARKERS

MH	YELLOW AND YELLOW	TEMP. RAISED

INSET '2'

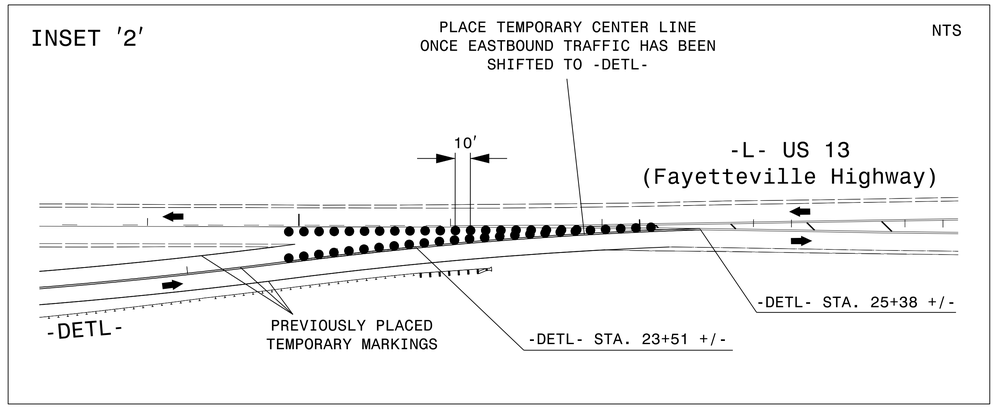

Dewberry
2610 WYCLIFF ROAD
SUITE 410
RALEIGH, NC 27607
PHONE: 919.881.9939
NC COA No. F-0929

APPROVED: Docu Signed by: J. Todd Brooks 912BC648C9B84EA...

DATE: 2/18/2020

SEAL

NORTH CAROLINA PROFESSIONAL SEAL 17586 ENGINEER J. TODD BROOKS

DOCUMENT NOT CONSIDERED FINAL UNLESS ALL SIGNATURES COMPLETED

DIVISION OF HIGHWAYS · STATE OF NORTH CAROLINA · DEPARTMENT OF TRANSPORTATION · WORK ZONE TRAFFIC CONTROL

PHASE II DETAIL

2/18/2020 2:41:23 PM
J:\TMP\Plans\B4635_TMP_TCP 7.dgn
USER: lwiles

DocuSign Envelope ID: 7DC0C792-EBE7-48D7-943B-61DCF7CB5BEE

PROJ. REFERENCE NO.	SHEET NO.
B-4635	TMP-8

TEMPORARY PAVEMENT MARKING

PAVEMENT MARKING LINES

C1	WHITE EDGELINE	TYPE 4 REMOVABLE TAPE (4″)
C13	YELLOW DOUBLE CENTER	TYPE 4 REMOVABLE TAPE (4″)
P1	WHITE EDGELINE	PAINT (4″)
P13	YELLOW DOUBLE CENTER	PAINT (4″)

PAVEMENT MARKERS

MH	YELLOW AND YELLOW	TEMP. RAISED

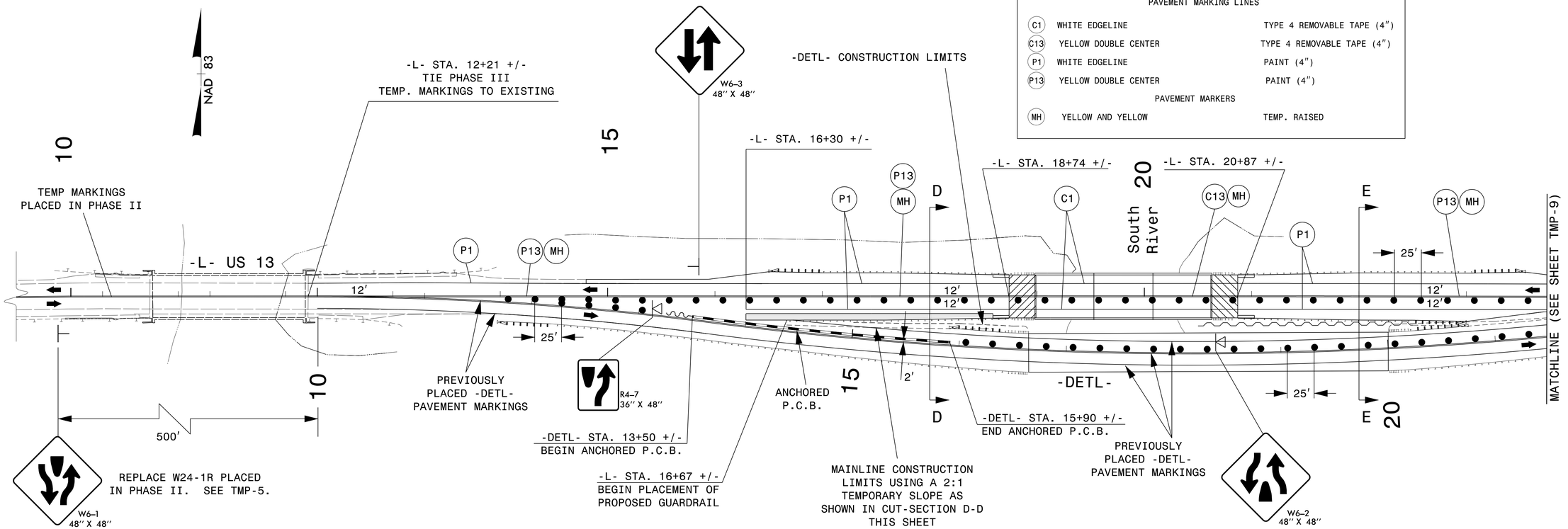

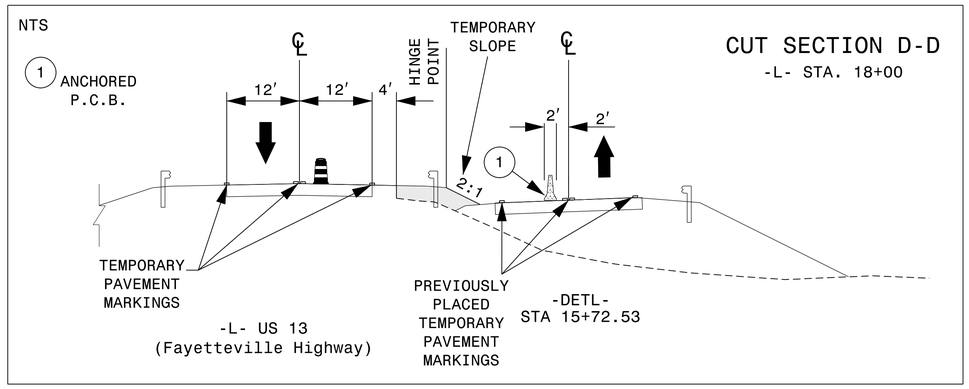

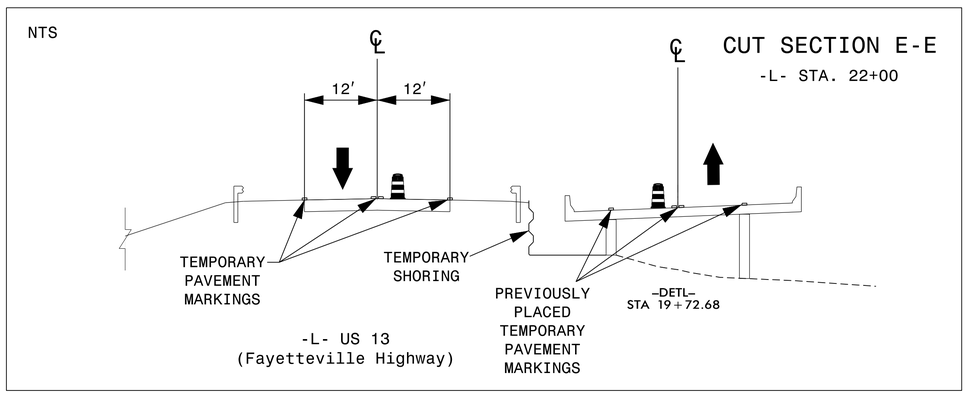

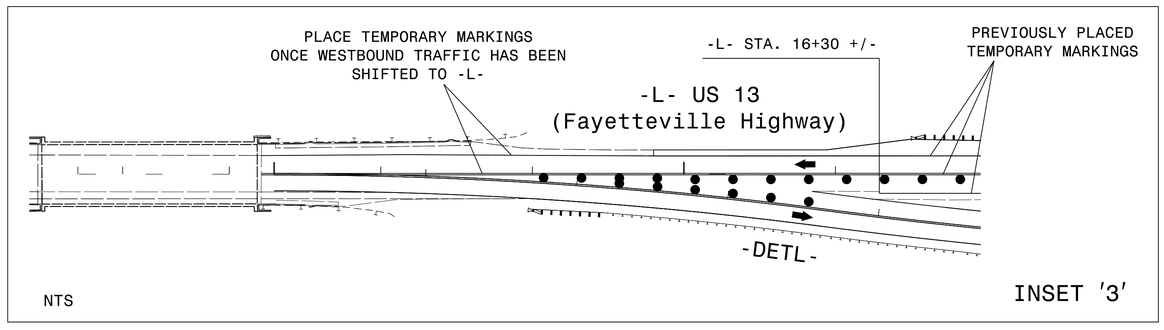

Dewberry
2610 WYCLIFF ROAD
SUITE 410
RALEIGH, NC 27607
PHONE: 919.881.9939
NC COA No. F-0929

APPROVED: DocuSigned by: J. Todd Brooks
DATE: 2/18/2020
SEAL

NORTH CAROLINA PROFESSIONAL SEAL 17586 ENGINEER J. TODD BROOKS

DIVISION OF HIGHWAYS · STATE OF NORTH CAROLINA · DEPARTMENT OF TRANSPORTATION · WORK ZONE TRAFFIC CONTROL

DOCUMENT NOT CONSIDERED FINAL UNLESS ALL SIGNATURES COMPLETED

PHASE III DETAIL

2/18/2020 2:41:26 PM
...\TMP\Plans\B4635_TMP_TCP 8.dgn
USER: lwiles

DocuSign Envelope ID: 7DC0C792-EBE7-48D7-943B-61DCF7CB5BEE

PROJ. REFERENCE NO.	SHEET NO.
B-4635	TMP-9

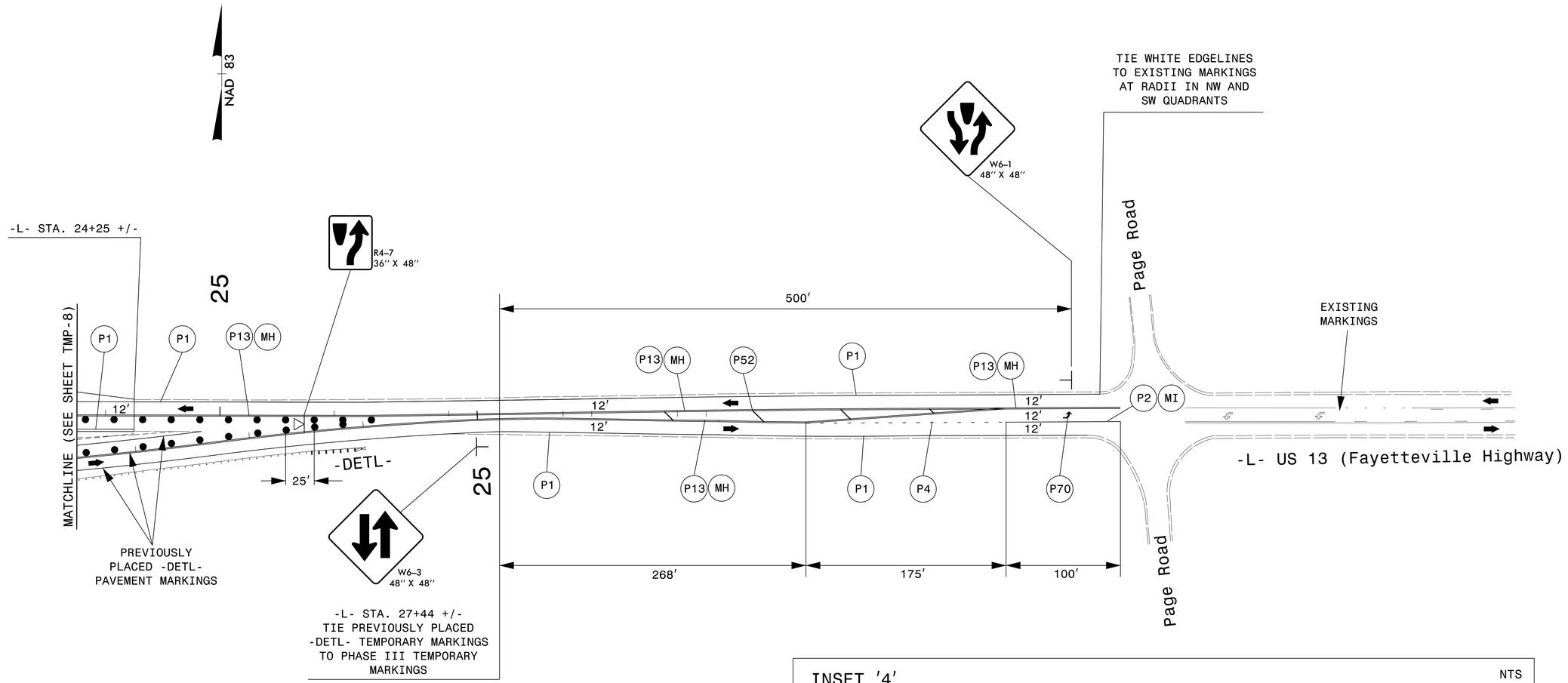

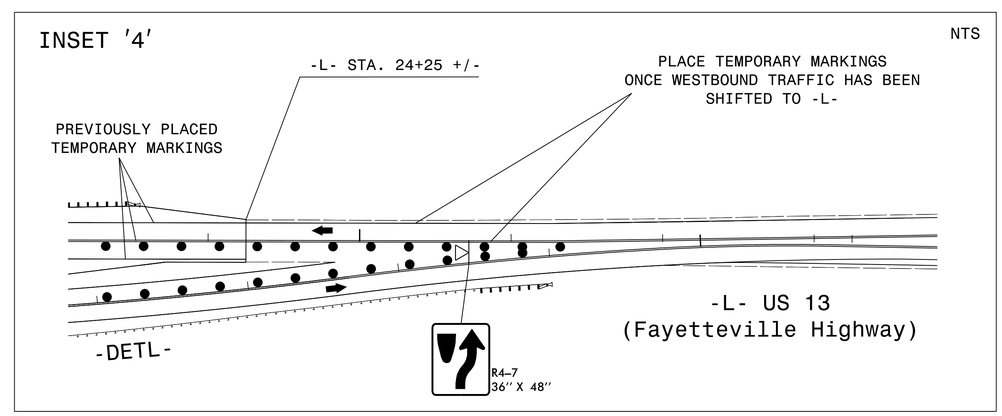

TEMPORARY PAVEMENT MARKING

PAVEMENT MARKING LINES

P1	WHITE EDGELINE	PAINT (4")
P4	3' - 9' SP WHITE MINISKIP	PAINT (4")
P2	WHITE SOLID LANE LINE	PAINT (4")
P13	YELLOW DOUBLE CENTER	PAINT (4")
P52	YELLOW DIAGONAL	PAINT (12")

PAVEMENT MARKING SYMBOLS AND CHARACTERS

P70	LEFT TURN MARKING SYMBOL	PAINT

PAVEMENT MARKERS

MH	YELLOW AND YELLOW	TEMP. RAISED
MI	CRYSTAL AND RED	TEMP. RAISED

Dewberry
2610 WYCLIFF ROAD
SUITE 410
RALEIGH, NC 27607
PHONE: 919.881.9939
NC COA No. F-0929

APPROVED: DocuSigned by: J. Todd Brooks B136C648C96B4EA...
DATE: 2/18/2020
SEAL
NORTH CAROLINA PROFESSIONAL SEAL 17586 ENGINEER J. TODD BROOKS

DOCUMENT NOT CONSIDERED FINAL UNLESS ALL SIGNATURES COMPLETED

DIVISION OF HIGHWAYS · STATE OF NORTH CAROLINA · DEPARTMENT OF TRANSPORTATION · WORK ZONE TRAFFIC CONTROL

PHASE III DETAIL

2/18/2020 2:41:28 PM
...\TMP\Plans\B4635_TMP_TCP 9.dgn
USER: jwiles

DocuSign Envelope ID: 7DC0C792-EBE7-48D7-943B-61DCF7CB5BEE

PROJ. REFERENCE NO.	SHEET NO.
B-4635	TMP-10

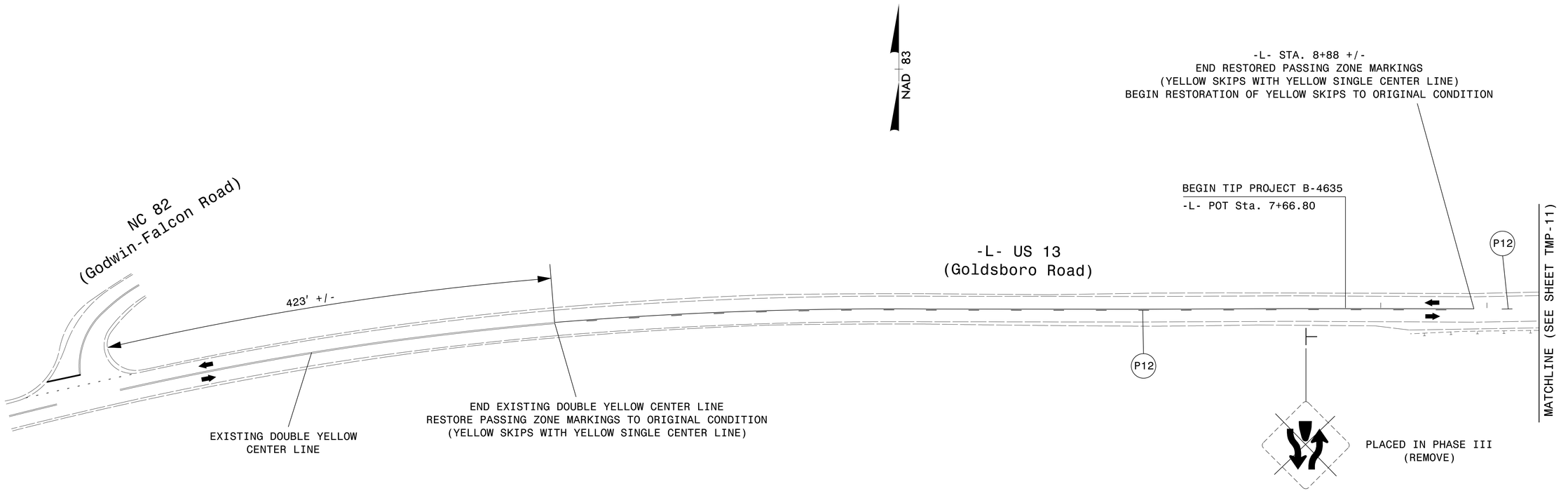

TEMPORARY PAVEMENT MARKING

PAVEMENT MARKING LINES

P12	10 FT. YELLOW SKIP	PAINT (4")

Dewberry
2610 WYCLIFF ROAD
SUITE 410
RALEIGH, NC 27607
PHONE: 919.881.9939
NC COA No. F-0929

APPROVED: DocuSigned by: B136C048C96B4EA...

DATE: 2/18/2020

SEAL

NORTH CAROLINA PROFESSIONAL SEAL 17586 ENGINEER J. TODD BROOKS

DOCUMENT NOT CONSIDERED FINAL UNLESS ALL SIGNATURES COMPLETED

DIVISION OF HIGHWAYS · STATE OF NORTH CAROLINA · DEPARTMENT OF TRANSPORTATION · WORK ZONE TRAFFIC CONTROL

PHASE IV DETAIL

2/18/2020 2:41:31 PM
...\TMP\Plans\B4635_TMP_TCP 10.dgn
USER: jwiles

DocuSign Envelope ID: 7DC0C792-EBE7-48D7-943B-61DCF7CB5BEE

PROJ. REFERENCE NO.	SHEET NO.
B-4635	TMP-11

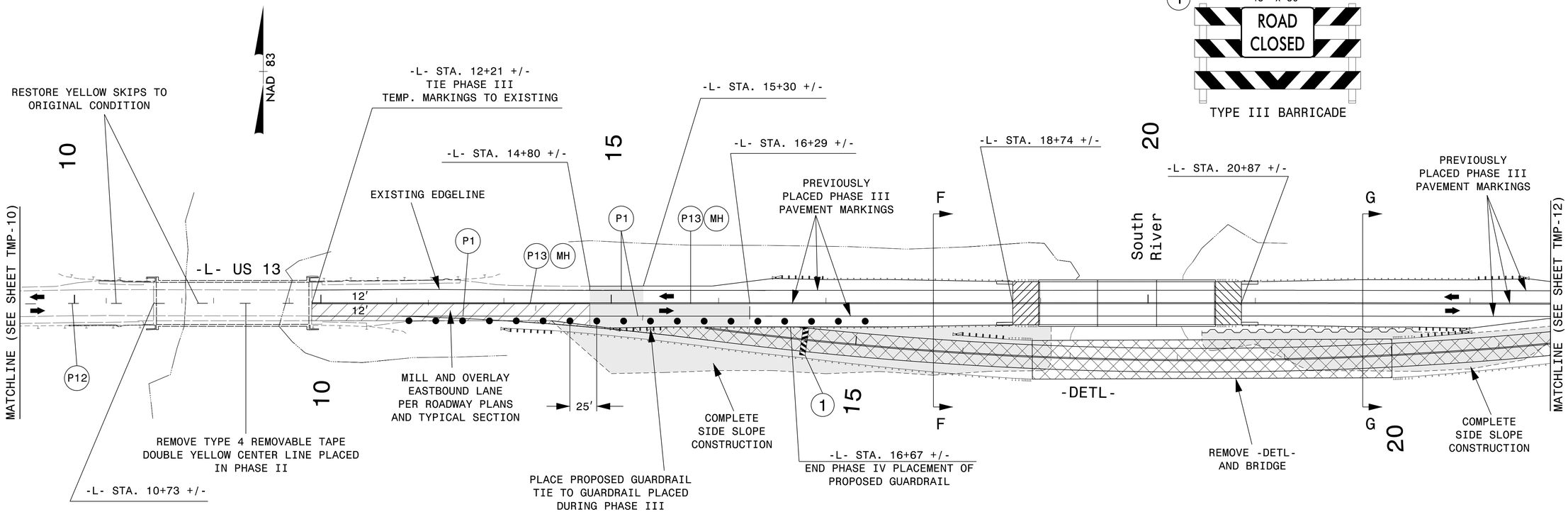

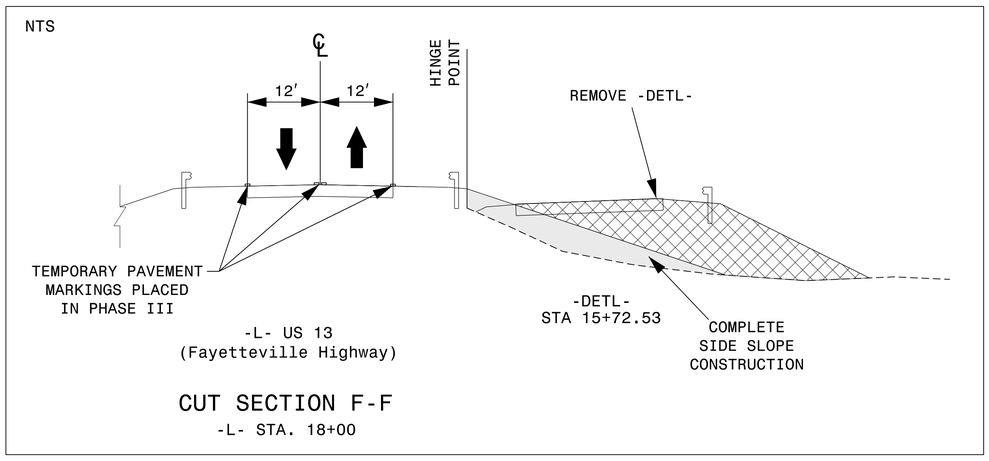

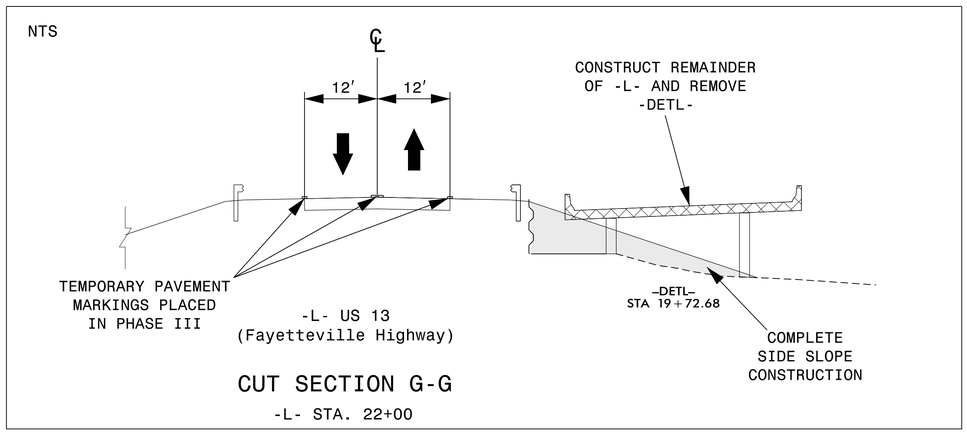

TEMPORARY PAVEMENT MARKING

PAVEMENT MARKING LINES

P1	WHITE EDGELINE	PAINT (4″)
P12	10 FT. YELLOW SKIP	PAINT (4″)
P13	YELLOW DOUBLE CENTER	PAINT (4″)

PAVEMENT MARKERS

MH	YELLOW AND YELLOW	TEMP. RAISED

Dewberry
2610 WYCLIFF ROAD
SUITE 410
RALEIGH, NC 27607
PHONE: 919.881.9939
NC COA No. F-0929

APPROVED: DocuSigned by: J. Todd Brooks B136C848C06B4EA...
DATE: 2/18/2020
SEAL

NORTH CAROLINA PROFESSIONAL SEAL 17586 ENGINEER J. TODD BROOKS

DIVISION OF HIGHWAYS · STATE OF NORTH CAROLINA · DEPARTMENT OF TRANSPORTATION · WORK ZONE TRAFFIC CONTROL

DOCUMENT NOT CONSIDERED FINAL UNLESS ALL SIGNATURES COMPLETED

PHASE IV DETAIL

2/18/2020 2:41:33 PM
...\TMP\Plans\B4635_TMP_TCP II.dgn
USER: jwiles

DocuSign Envelope ID: 7DC0C792-EBE7-48D7-943B-61DCF7CB5BEE

PROJ. REFERENCE NO.	SHEET NO.
B-4635	TMP-12

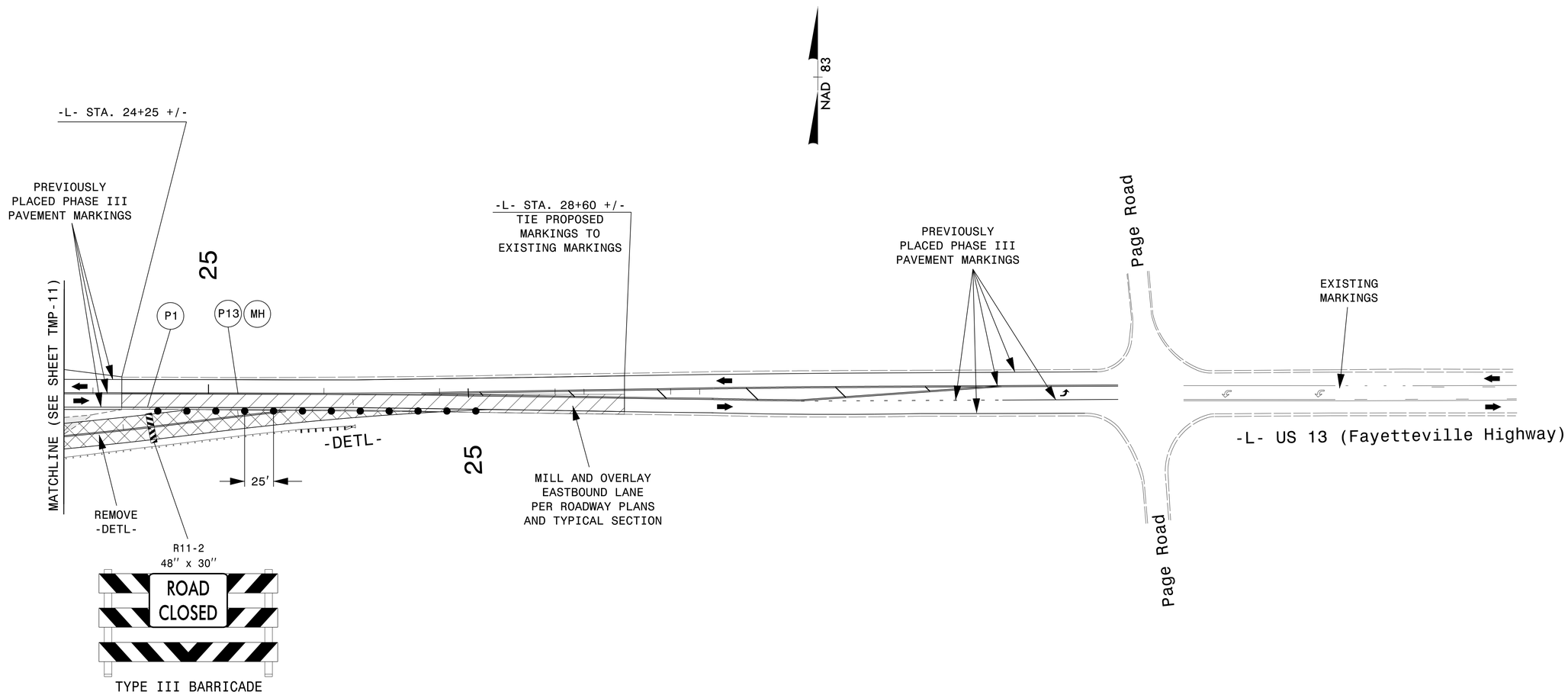

TEMPORARY PAVEMENT MARKING

PAVEMENT MARKING LINES

P1	WHITE EDGELINE	PAINT (4")
P13	YELLOW DOUBLE CENTER	PAINT (4")

PAVEMENT MARKERS

MH	YELLOW AND YELLOW	TEMP. RAISED

Dewberry
2610 WYCLIFF ROAD
SUITE 410
RALEIGH, NC 27607
PHONE: 919.881.9939
NC COA No. F-0929

APPROVED: DocuSigned by: J. Todd Brooks
DATE: 2/18/2020
SEAL
NORTH CAROLINA PROFESSIONAL SEAL 17586 ENGINEER J. TODD BROOKS

DOCUMENT NOT CONSIDERED FINAL UNLESS ALL SIGNATURES COMPLETED

DIVISION OF HIGHWAYS · STATE OF NORTH CAROLINA · DEPARTMENT OF TRANSPORTATION · WORK ZONE TRAFFIC CONTROL

PHASE IV DETAIL

2/18/2020 2:41:35 PM
...\TMP\Plans\B4635_TMP_TCP 12.dgn
USER: jwiles

DocuSign Envelope ID: 7DC0C792-EBE7-48D7-943B-61DCF7CB5BEE

PROJ. REFERENCE NO.	SHEET NO.
B-4635	TMP-13

SEE RSD 1101.02, SHEET 1 OF 14, FOR SIGNING AND DEVICES

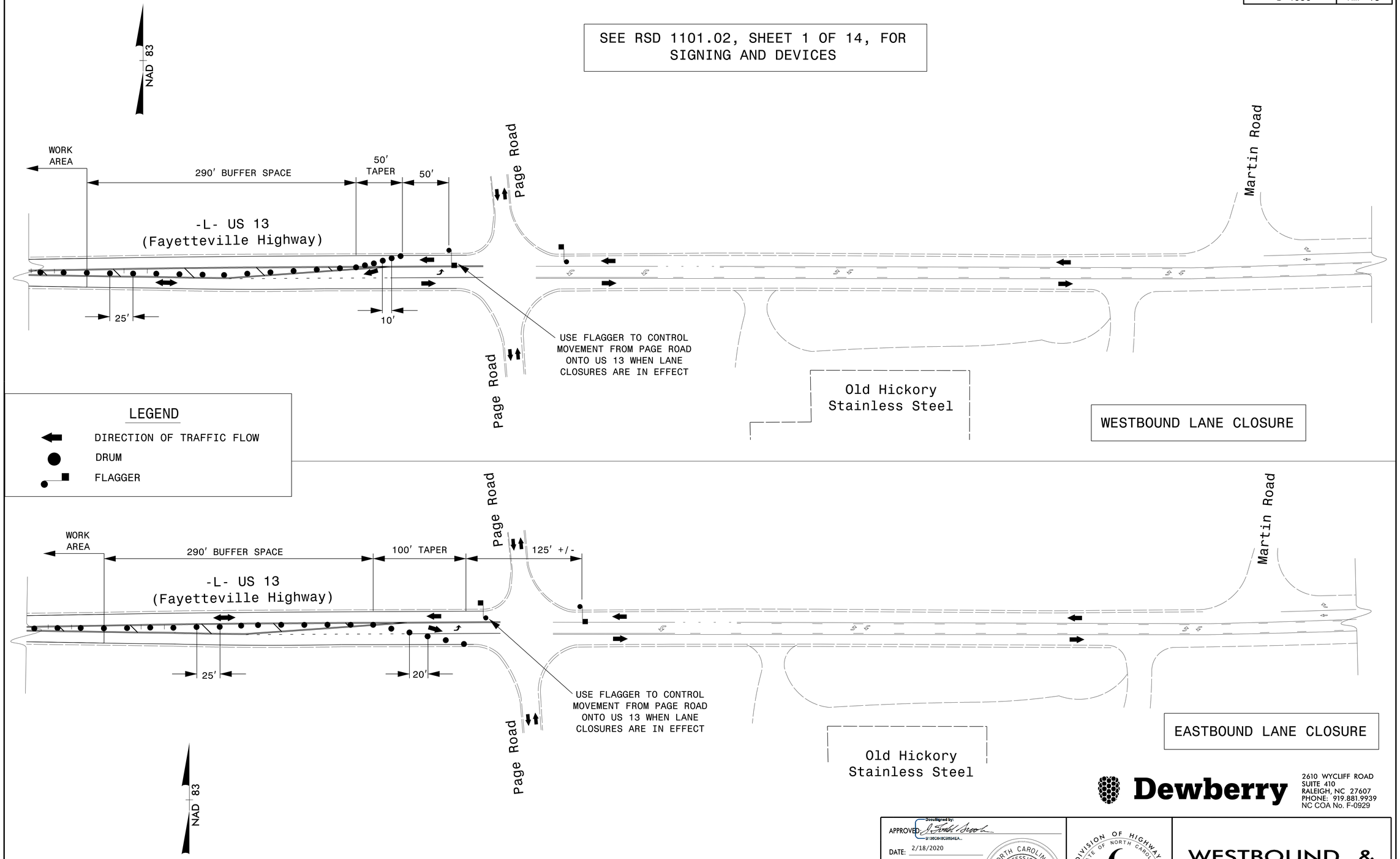

Dewberry
2610 WYCLIFF ROAD
SUITE 410
RALEIGH, NC 27607
PHONE: 919.881.9939
NC COA No. F-0929

APPROVED: DocuSigned by: J. Todd Brooks
DATE: 2/18/2020
SEAL
NORTH CAROLINA PROFESSIONAL SEAL 17586 ENGINEER J. TODD BROOKS

DOCUMENT NOT CONSIDERED FINAL UNLESS ALL SIGNATURES COMPLETED

DIVISION OF HIGHWAYS · STATE OF NORTH CAROLINA · DEPARTMENT OF TRANSPORTATION · WORK ZONE TRAFFIC CONTROL

WESTBOUND & EASTBOUND LANE CLOSURE DETAILS

2/18/2020 2:41:38 PM
...\TMP\Plans\B4635_TMP_TCP 13.dgn
USER: jwiles

DocuSign Envelope ID: B2916F3F-8865-40F5-A23D-EA196B70FF57

T.I.P.: B-4635

CONTRACT:

STATE OF NORTH CAROLINA
DEPARTMENT OF TRANSPORTATION

SIGNING & PAVEMENT MARKING PLAN
SAMPSON COUNTY

TIP NO.	SHEET NO.
B-4635	PMP-1

APPROVED: DocuSigned by: D1380648C9B84EA... 2/18/2020

DATE:

SEAL

NORTH CAROLINA PROFESSIONAL SEAL 17586 ENGINEER J. TODD BROOKS

DOCUMENT NOT CONSIDERED FINAL UNLESS ALL SIGNATURES COMPLETED

INDEX

SHEET NO.	DESCRIPTION
PMP-1	SIGNING & PAVEMENT MARKING PLAN TITLE AND SCHEDULE SHEET
PMP-2 - PMP-4	SIGNING AND PAVEMENT MARKING DETAIL

ROADWAY STANDARD DRAWING

THE FOLLOWING ROADWAY STANDARDS AS APPEAR IN "ROADWAY STANDARD DRAWINGS" - PROJECT SERVICES UNIT - N.C. DEPARTMENT OF TRANSPORTATION - RALEIGH, N.C., DATED JANUARY 2018 ARE APPLICABLE TO THIS PROJECT AND BY REFERENCE HEREBY ARE CONSIDERED A PART OF THESE PLANS:

STD. NO.	TITLE
1205.01	PAVEMENT MARKINGS - LINE TYPES AND OFFSETS
1205.02	PAVEMENT MARKINGS - TWO-LANE AND MULTILANE ROADWAYS
1205.04	PAVEMENT MARKINGS - INTERSECTIONS
1205.05	PAVEMENT MARKINGS - TURN LANES
1205.08	PAVEMENT MARKINGS - SYMBOLS AND WORD MESSAGES
1205.09	PAVEMENT MARKINGS - PAINTED ISLANDS
1205.12	PAVEMENT MARKINGS - BRIDGES
1250.01	RAISED PAVEMENT MARKERS - INSTALLATION SPACING
1251.01	RAISED PAVEMENT MARKERS - PERMANENT AND TEMPORARY
1261.01	GUARDRAIL AND BARRIER DELINEATORS - INSTALLATION SPACING
1261.02	GUARDRAIL AND BARRIER DELINEATORS - TYPES AND MOUNTING
1262.01	GUARDRAIL END DELINEATION

GENERAL NOTES

THE FOLLOWING GENERAL NOTES APPLY AT ALL TIMES FOR THE DURATION OF THE CONSTRUCTION PROJECT, EXCEPT WHEN OTHERWISE NOTED IN THE PLAN, OR DIRECTED BY THE ENGINEER.

A) INSTALL PAVEMENT MARKINGS AND PAVEMENT MARKERS ON THE FINAL SURFACE AS FOLLOWS:

ROAD NAME	MARKING	MARKER
US 13	THERMOPLASTIC	PERMANENT RAISED
US 13 BRIDGES	POLYUREA	PERMANENT RAISED

B) TIE PROPOSED PAVEMENT MARKING LINES TO EXISTING PAVEMENT MARKING LINES.

C) REMOVE/REPLACE ANY CONFLICTING/DAMAGED PAVEMENT MARKINGS AND MARKERS.

D) PASSING ZONES WILL BE DETERMINED IN THE FIELD AND MUST BE APPROVED BY THE ENGINEER.

E) REMOVE ALL RESIDUE AND SURFACE LAITANCE BY ACCEPTABLE METHODS ON CONCRETE BRIDGE DECKS PRIOR TO PLACING POLYUREA PAVEMENT MARKING MATERIAL.

F) UNLESS OTHERWISE SPECIFIED, HEATED-IN-PLACE THERMOPLASTIC MAY BE USED IN LIEU OF EXTRUDED THERMOPLASTIC FOR STOP BARS, SYMBOLS, CHARACTERS AND DIAGONALS. IF HEATED-IN-PLACE IS USED, IT SHALL BE PAID FOR USING THE EXTRUDED THERMOPLASTIC PAY ITEM.

PAVEMENT MARKING SCHEDULE

PAVEMENT MARKING LINES		
T1	WHITE EDGELINE	THERMOPLASTIC (4", 90 mils)
T2	WHITE SOLID LANE LINE	THERMOPLASTIC (4", 90 mils)
T4	3' - 9' SP WHITE MINISKIP	THERMOPLASTIC (4", 90 mils)
T11	YELLOW SINGLE CENTER LINE	THERMOPLASTIC (4", 90 mils)
T12	10' YELLOW SKIP	THERMOPLASTIC (4", 90 mils)
T13	YELLOW DOUBLE CENTER LINE	THERMOPLASTIC (4", 90 mils)
T52	YELLOW DIAGONAL	THERMOPLASTIC (12", 90 mils)
V1	WHITE EDGELINE	POLYUREA (4", 20 mils)
V12	10' YELLOW SKIP	POLYUREA (4", 20 mils)
PAVEMENT MARKING SYMBOLS		
T70	LEFT TURN MARKING SYMBOL	THERMOPLASTIC
PAVEMENT MARKERS		
MA	YELLOW AND YELLOW	PERMANENT RAISED
MB	CRYSTAL AND RED	PERMANENT RAISED

PLAN REVIEWED BY: N.C.D.O.T. SIGNING AND DELINEATION UNIT

AYMAN I. ALQUDWAH, PE SIGNING & DELINEATION REGIONAL ENGINEER

_____ SIGNING & DELINEATION PROJECT DESIGN ENGINEER

STATE OF NORTH CAROLINA · DEPARTMENT OF TRANSPORTATION

PLAN PREPARED BY:

J. TODD BROOKS, PE PROJECT ENGINEER

ABRAHAM WILES PROJECT DESIGN ENGINEER

Dewberry
2610 WYCLIFF ROAD
SUITE 410
RALEIGH, NC 27607
PHONE: 919-881-9939
NC COA No. F-0929

8:56:36 AM
2/18/2020
File: C:\Users\jwiles\AppData\Local\Temp\AcPublish_6744\B-4635 PH2\CADD\Civil\B-4635\Traffic\Signing and Marking\Plans\B4635_PMP_PM 1.dgn

DocuSign Envelope ID: B2916F3F-8865-40F5-A23D-EA196B70FF57

TIP NO.	SHEET NO.
B-4635	PMP-2

APPROVED: DocuSigned by: J. Todd Brooks B136C648C98848A...
DATE: 2/18/2020

SEAL

NORTH CAROLINA PROFESSIONAL SEAL 17586 ENGINEER J. TODD BROOKS

DOCUMENT NOT CONSIDERED FINAL UNLESS ALL SIGNATURES COMPLETED

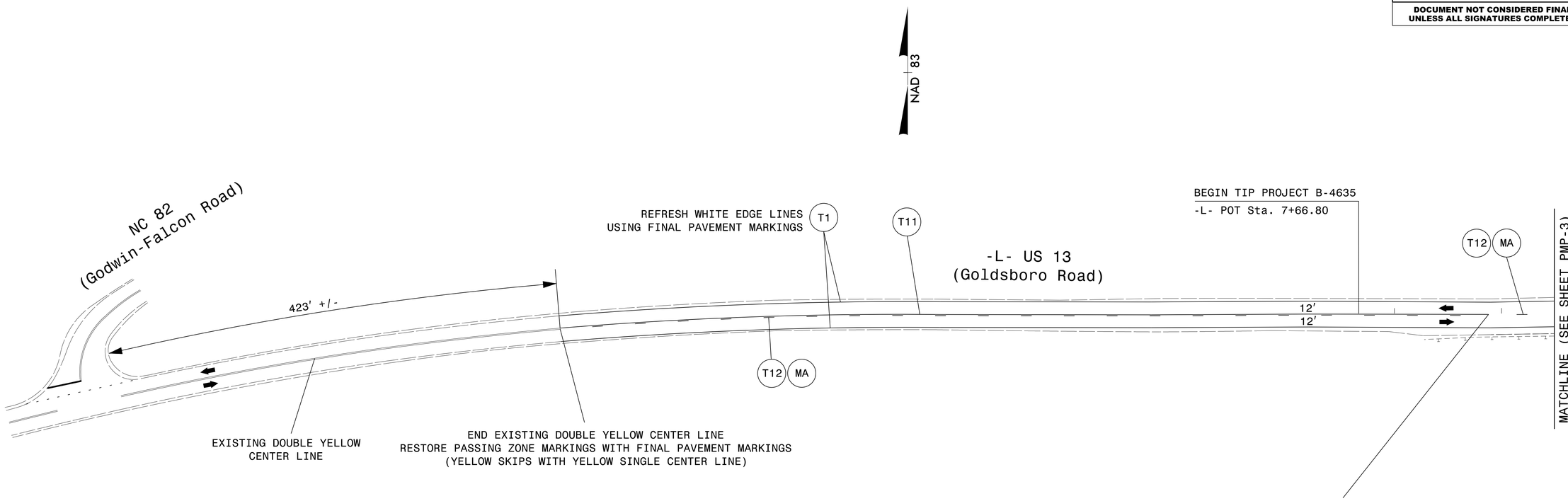

PAVEMENT MARKING SCHEDULE

PAVEMENT MARKING LINES

T1	WHITE EDGELINE	THERMOPLASTIC (4", 90 mils)
T11	YELLOW SINGLE CENTER LINE	THERMOPLASTIC (4", 90 mils)
T12	10' YELLOW SKIP	THERMOPLASTIC (4", 90 mils)

PAVEMENT MARKERS

MA	YELLOW AND YELLOW	PERMANENT RAISED

Dewberry
2610 WYCLIFF ROAD
SUITE 410
RALEIGH, NC 27607
PHONE: 919-881-9939
NC COA No. F-0929

2/18/2020 3:41:28 PM
..\Plans\B4635_PMP_PM 2.dgn
USER: jwiles

SIGNING & PAVEMENT MARKING PLAN

DocuSign Envelope ID: B2916F3F-8865-40F5-A23D-EA196B70FF57

TIP NO.	SHEET NO.
B-4635	PMP-3

APPROVED: DocuSigned by: J. Todd Brooks B138C648C90B4EA...

DATE: 2/18/2020

SEAL

NORTH CAROLINA PROFESSIONAL SEAL 17586 ENGINEER J. TODD BROOKS

DOCUMENT NOT CONSIDERED FINAL UNLESS ALL SIGNATURES COMPLETED

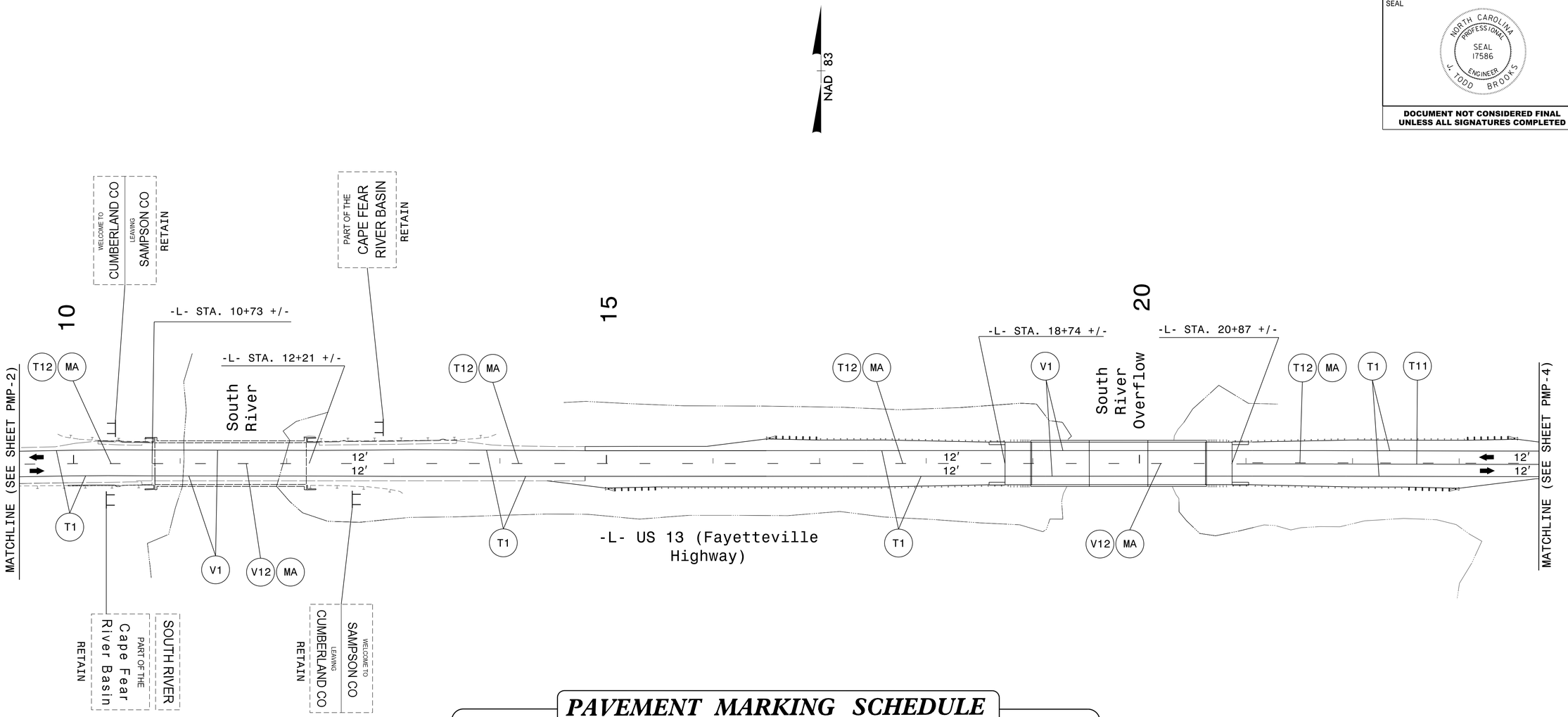

PAVEMENT MARKING SCHEDULE

PAVEMENT MARKING LINES

T1	WHITE EDGELINE	THERMOPLASTIC (4″, 90 mils)
T11	YELLOW SINGLE CENTER LINE	THERMOPLASTIC (4″, 90 mils)
T12	10′ YELLOW SKIP	THERMOPLASTIC (4″, 90 mils)
V1	WHITE EDGELINE	POLYUREA (4″, 20 mils)
V12	10′ YELLOW SKIP	POLYUREA (4″, 20 mils)

PAVEMENT MARKERS

MA	YELLOW AND YELLOW	PERMANENT RAISED

Dewberry
2610 WYCLIFF ROAD
SUITE 410
RALEIGH, NC 27607
PHONE: 919-881-9939
NC COA No. F-0929

2/18/2020 3:41:30 PM
...\Plans\B4635_PMP_PM 3.dgn
USER: iwiles

SIGNING & PAVEMENT MARKING PLAN

DocuSign Envelope ID: B2916F3F-8865-40F5-A23D-EA196B70FF57

TIP NO.	SHEET NO.
B-4635	PMP-4

APPROVED: DocuSigned by: J. Todd Brooks B136C548C9854EA...

DATE: 2/18/2020

SEAL

NORTH CAROLINA PROFESSIONAL SEAL 17586 ENGINEER J. TODD BROOKS

DOCUMENT NOT CONSIDERED FINAL UNLESS ALL SIGNATURES COMPLETED

NAD 83

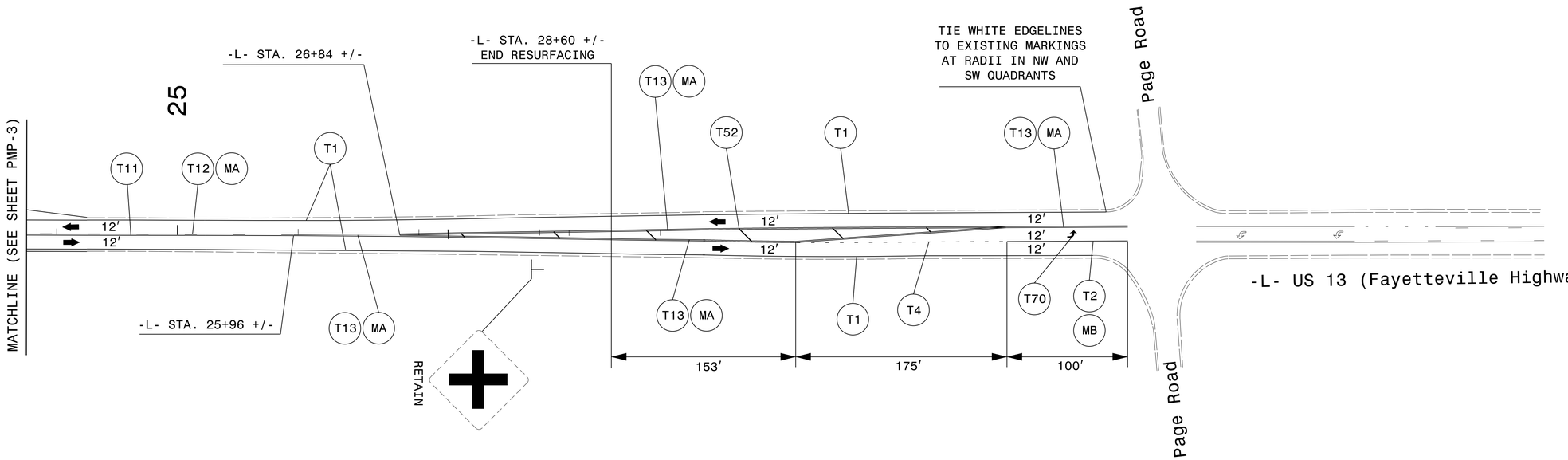

PAVEMENT MARKING SCHEDULE

PAVEMENT MARKING LINES

T1	WHITE EDGELINE	THERMOPLASTIC (4″, 90 mils)
T2	WHITE SOLID LANE LINE	THERMOPLASTIC (4″, 90 mils)
T4	3′ - 9′ SP WHITE MINISKIP	THERMOPLASTIC (4″, 90 mils)
T11	YELLOW SINGLE CENTER LINE	THERMOPLASTIC (4″, 90 mils)
T12	10′ YELLOW SKIP	THERMOPLASTIC (4″, 90 mils)
T13	YELLOW DOUBLE CENTER LINE	THERMOPLASTIC (4″, 90 mils)
T52	YELLOW DIAGONAL	THERMOPLASTIC (12″, 90 mils)

PAVEMENT MARKING SYMBOLS

T70	LEFT TURN MARKING SYMBOL	THERMOPLASTIC

PAVEMENT MARKERS

MA	YELLOW AND YELLOW	PERMANENT RAISED
MB	CRYSTAL AND RED	PERMANENT RAISED

Dewberry
2610 WYCLIFF ROAD
SUITE 410
RALEIGH, NC 27607
PHONE: 919-881-9939
NC COA No. F-0929

2/18/2020 3:41:32 PM
...\Plans\B4635_PMP_PM 4.dgn
USER: jwiles

SIGNING & PAVEMENT MARKING PLAN

TIP PROJECT: B-4635

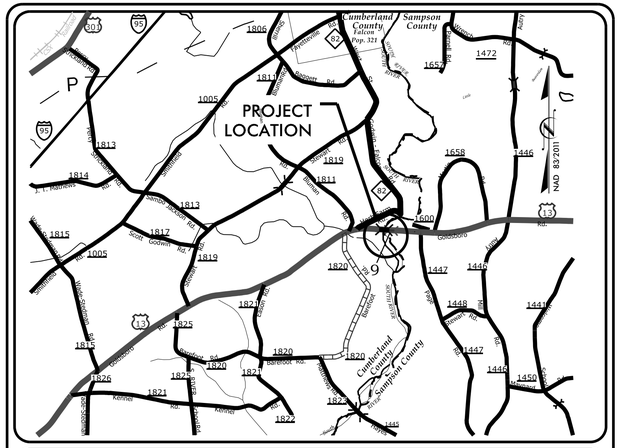

VICINITY MAP
NOT TO SCALE

STATE OF NORTH CAROLINA
DIVISION OF HIGHWAYS

PLAN FOR PROPOSED HIGHWAY EROSION CONTROL SAMPSON COUNTY

LOCATION: REPLACE BRIDGE #9 OVER SOUTH RIVER OVERFLOW ON US 13

TYPE OF WORK: GRADING, DRAINAGE, PAVING AND STRUCTURE

STATE	STATE PROJECT REFERENCE NO.	SHEET NO.	TOTAL SHEETS
N.C.	B-4635	EC-1	
STATE PROJ. NO.	F. A. PROJ. NO.	DESCRIPTION	

EROSION AND SEDIMENT CONTROL MEASURES

Std. #	Description	Symbol
1630.03	Temporary Silt Ditch	TSD
1630.05	Temporary Diversion	TD
1605.01	Temporary Silt Fence	
1606.01	Special Sediment Control Fence	
1622.01	Temporary Berms and Slope Drains	
1630.02	Silt Basin Type B	
1633.01	Temporary Rock Silt Check Type-A	
	Temporary Rock Silt Check Type-A with Matting and Polyacrylamide (PAM)	
1633.02	Temporary Rock Silt Check Type-B	
	Wattle / Coir Fiber Wattle	EW CFW
	Wattle / Coir Fiber Wattle with Polyacrylamide (PAM)	
1634.01	Temporary Rock Sediment Dam Type-A	
1634.02	Temporary Rock Sediment Dam Type-B	
1635.01	Rock Pipe Inlet Sediment Trap Type-A	
1635.02	Rock Pipe Inlet Sediment Trap Type-B	
1630.04	Stilling Basin	
1630.06	Special Stilling Basin	
	Rock Inlet Sediment Trap:	
1632.01	Type A	A
1632.02	Type B	B
1632.03	Type C	C
	Skimmer Basin	
	Tiered Skimmer Basin	
	Infiltration Basin	

THIS PROJECT CONTAINS EROSION CONTROL PLANS FOR CLEARING AND GRUBBING PHASE OF CONSTRUCTION.

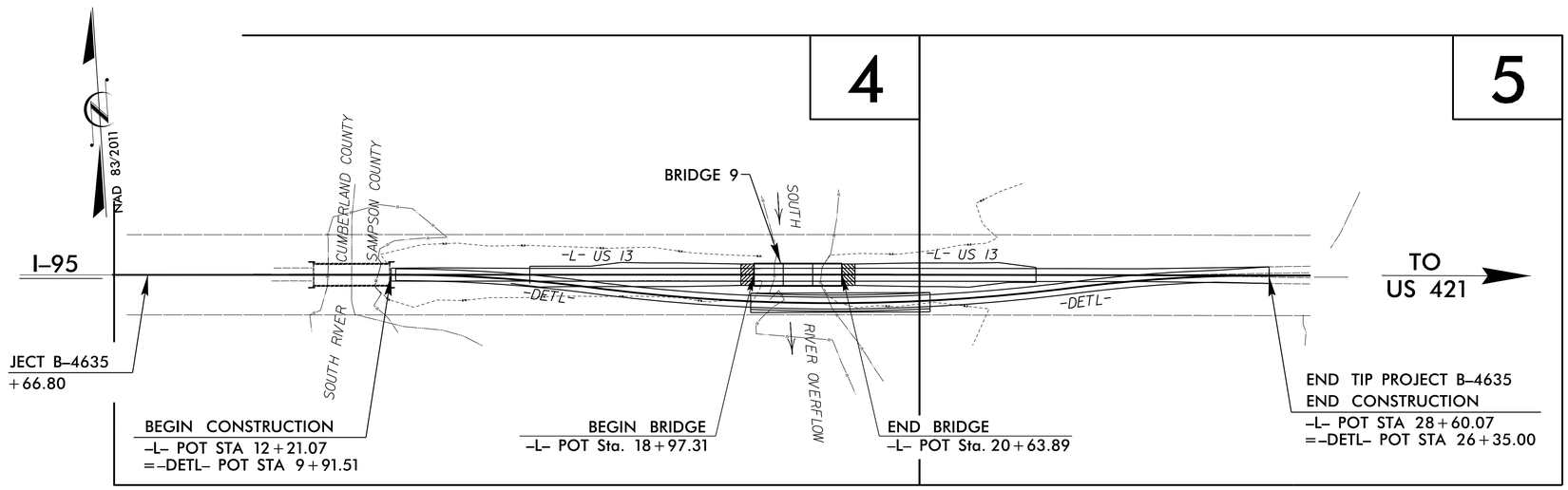

GRAPHIC SCALE

50 25 0 50 100
PLANS

THESE EROSION AND SEDIMENT CONTROL PLANS COMPLY WITH THE APPLICABLE REGULATIONS SET FORTH BY THE NCG-010000 GENERAL CONSTRUCTION PERMIT EFFECTIVE APRIL 1, 2019 AND ISSUED BY THE NORTH CAROLINA DEPARTMENT OF ENVIRONMENTAL QUALITY DIVISION OF WATER RESOURCES.

Dewberry

Prepared in the Office of:

DEWBERRY
2610 WYCLIFF ROAD
SUITE 410
RALEIGH, NC 27607
PHONE: 919.881.9939
NC COA No. F-0929

Designed by:

BRAD EVERHART ***4118***
NAME *LEVEL III CERTIFICATION NO.*

Roadway Standard Drawings

The following roadway english standards as appear in "Roadway Standard Drawings"- Roadway Design Unit - N. C. Department of Transportation - Raleigh, N. C., dated January 2018 and the latest revison thereto are applicable to this project and by reference hereby are considered a part of these plans.

1604.01	Railroad Erosion Control Detail	1632.01	Rock Inlet Sediment Trap Type A
1605.01	Temporary Silt Fence	1632.02	Rock Inlet Sediment Trap Type B
1606.01	Special Sediment Control Fence	1632.03	Rock Inlet Sediment Trap Type C
1607.01	Gravel Construction Entrance	1633.01	Temporary Rock Silt Check Type A
1622.01	Temporary Berms and Slope Drains	1633.02	Temporary Rock Silt Check Type B
1630.01	Riser Basin	1634.01	Temporary Rock Sediment Dam Type A
1630.02	Silt Basin Type B	1634.02	Temporary Rock Sediment Dam Type B
1630.03	Temporary Silt Ditch	1635.01	Rock Pipe Inlet Sediment Trap Type A
1630.04	Stilling Basin	1635.02	Rock Pipe Inlet Sediment Trap Type B
1630.05	Temporary Diversion	1640.01	Coir Fiber Baffle
1630.06	Special Stilling Basin	1645.01	Temporary Stream Crossing
1631.01	Matting Installation		

11/1/2019 11:33:33 AM
USER:rbrooks

PROJECT REFERENCE NO.	SHEET NO.
B-4635	EC-2
R/W SHEET NO.	
ROADWAY DESIGN ENGINEER	HYDRAULICS ENGINEER

SILT FENCE WATTLE BREAK DETAIL

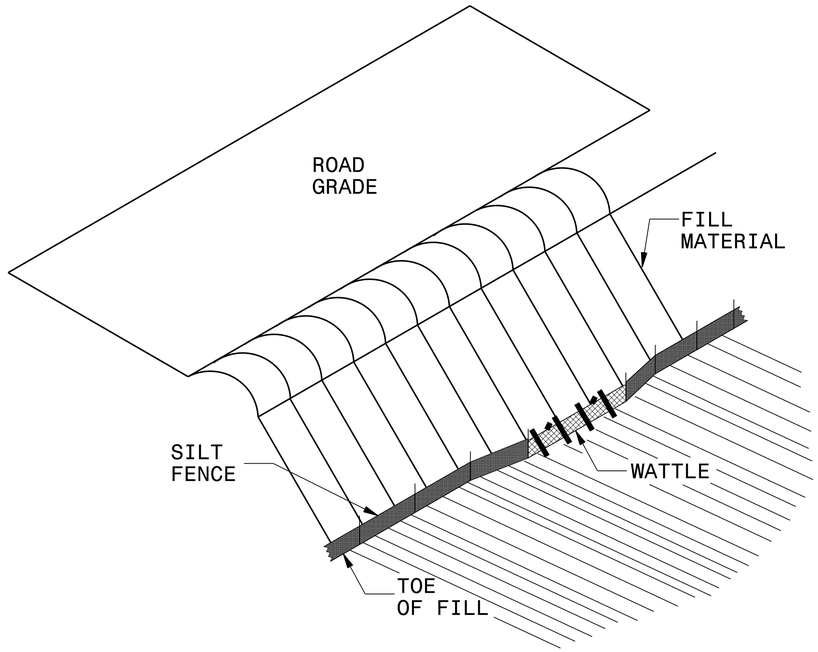

ISOMETRIC VIEW

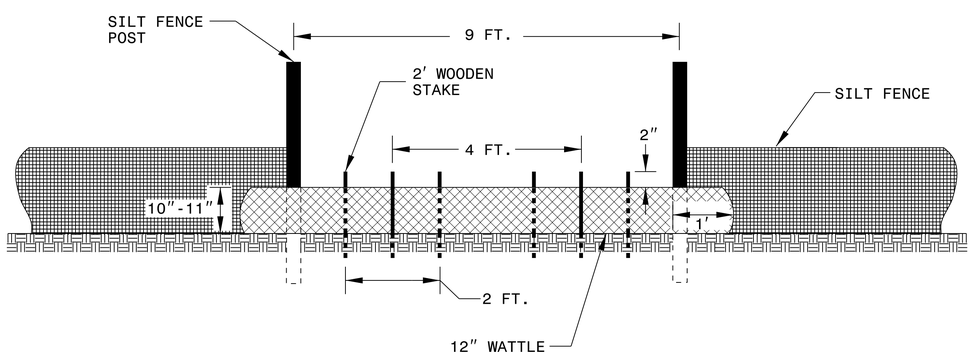

VIEW FROM SLOPE

NOTES:

USE MINIMUM 12 IN. DIAMETER EXCELSIOR WATTLE AND LENGTH OF 10 FT.

EXCAVATE A 1 TO 2 INCH TRENCH FOR WATTLE TO BE PLACED.

DO NOT PLACE WATTLE ON TOE OF SLOPE.

USE 2 FT. WOODEN STAKES WITH A 2 IN. BY 2 IN. NOMINAL CROSS SECTION.

INSTALL A MINIMUM OF 2 UPSLOPE STAKES AND 4 DOWNSLOPE STAKES AT AN ANGLE TO WEDGE WATTLE TO GROUND.

PROVIDE STAPLES MADE OF 0.125 IN. DIAMETER STEEL WIRE FORMED INTO A U SHAPE NOT LESS THAN 12″ IN LENGTH.

INSTALL STAPLES APPROXIMATELY EVERY 1 LINEAR FOOT ON BOTH SIDES OF WATTLE AND AT EACH END TO SECURE IT TO THE SOIL.

WATTLE INSTALLATION CAN BE ON OUTSIDE OF THE SILT FENCE AS DIRECTED.

INSTALL TEMPORARY SILT FENCE IN ACCORDANCE WITH SECTION 1605 OF THE STANDARD SPECIFICATIONS.

INSET A

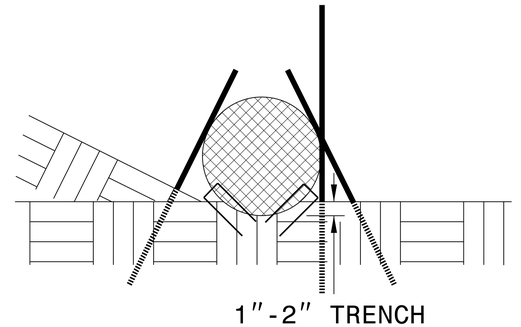

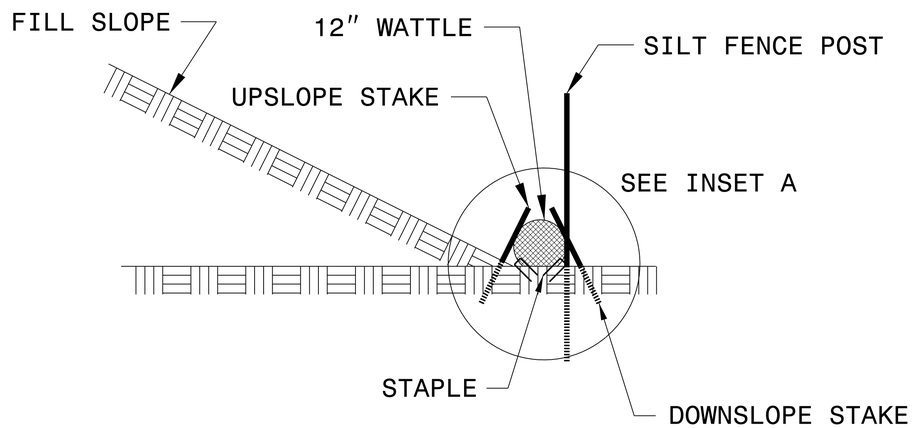

SIDE VIEW

PROJECT REFERENCE NO.	SHEET NO.
B-4635	EC-2A
R/W SHEET NO.	
ROADWAY DESIGN ENGINEER	HYDRAULICS ENGINEER

WATTLE WITH POLYACRYLAMIDE (PAM) DETAIL

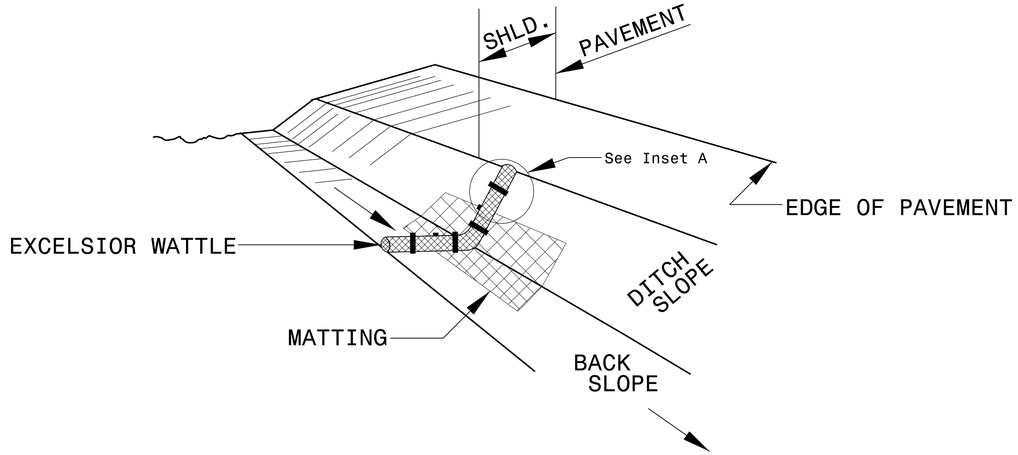

ISOMETRIC VIEW

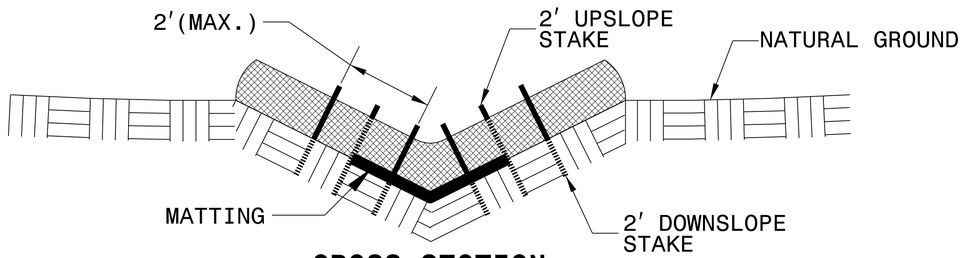

CROSS SECTION VEE DITCH

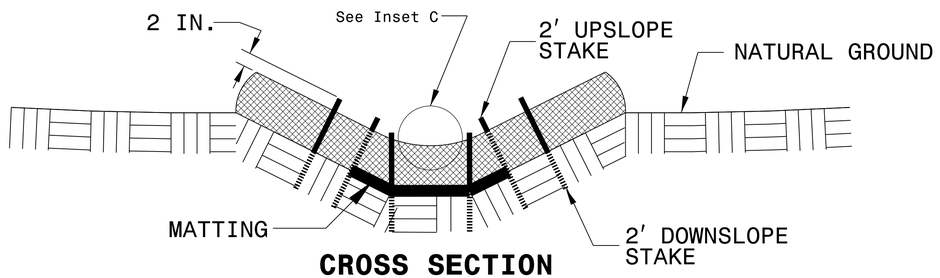

CROSS SECTION TRAPEZOIDAL DITCH

NOTES:

USE MINIMUM 12 IN. DIAMETER EXCELSIOR WATTLE.

USE 2 FT. WOODEN STAKES WITH A 2 IN. BY 2 IN. NOMINAL CROSS SECTION.

ONLY INSTALL WATTLE(S) TO A HEIGHT IN DITCH SO FLOW WILL NOT WASH AROUND WATTLE AND SCOUR DITCH SLOPES AND AS DIRECTED.

INSTALL A MINIMUM OF 2 UPSLOPE STAKES AND 4 DOWNSLOPE STAKES AT AN ANGLE TO WEDGE WATTLE TO BOTTOM OF DITCH.

PROVIDE STAPLES MADE OF 0.125 IN. DIAMETER STEEL WIRE FORMED INTO A U SHAPE NOT LESS THAN 12″ IN LENGTH.

INSTALL STAPLES APPROXIMATELY EVERY 1 LINEAR FOOT ON BOTH SIDES OF WATTLE AND AT EACH END TO SECURE IT TO THE SOIL.

INSTALL MATTING IN ACCORDANCE WITH SECTION 1631 OF THE STANDARD SPECIFICATIONS.

PRIOR TO POLYACRYLAMIDE (PAM) APPLICATION, OBTAIN A SOIL SAMPLE FROM PROJECT LOCATION, AND FROM OFFSITE MATERIAL, AND ANALYZE FOR APPROPRIATE PAM FLOCCULANT TO BE APPLIED TO EACH WATTLE.

INITIALLY APPLY 2 OUNCES OF ANIONIC OR NEUTRALLY CHARGED PAM OVER WATTLE WHERE WATER WILL FLOW AND 1 OUNCE OF PAM ON MATTING ON EACH SIDE OF WATTLE. REAPPLY PAM AFTER EVERY RAINFALL EVENT THAT IS EQUAL TO OR EXCEEDS 0.50 IN.

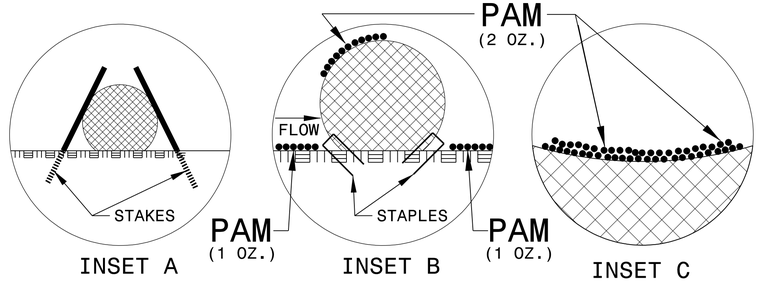

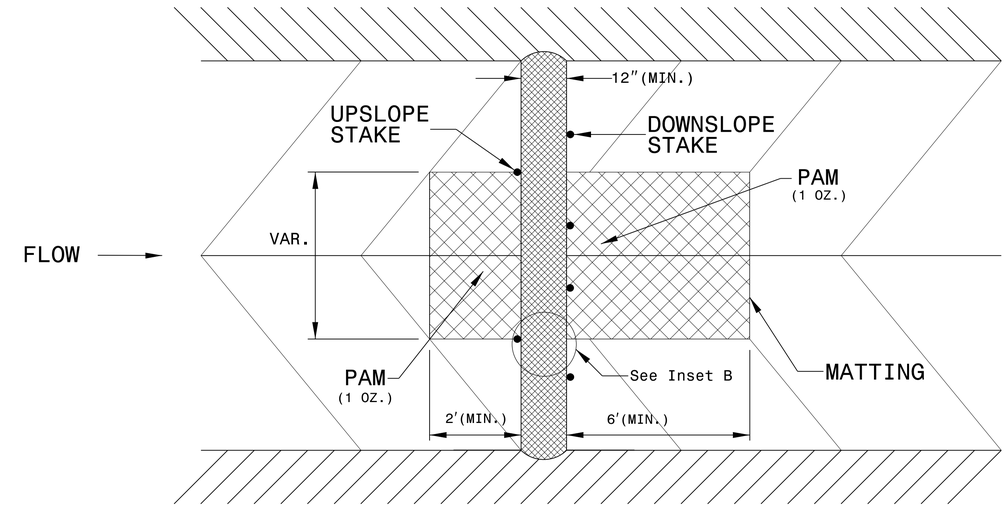

TOP VIEW

PROJECT REFERENCE NO.	SHEET NO.
B-4635	EC-3
ROADWAY DESIGN ENGINEER	HYDRAULICS ENGINEER

DIVISION OF HIGHWAYS
STATE OF NORTH CAROLINA

SOIL STABILIZATION SUMMARY SHEET

MATTING ON SLOPES FOR EROSION CONTROL

CONST SHEET NO.	LINE	FROM STATION	TO STATION	SIDE	ESTIMATE (SY)
4	-L-	14+65	19+00	RT	2005
4	-L-	16+15	19+00	LT	1180
5	-L-	20+65	23+85	LT	1205
5	-L-	20+65	23+85	RT	1160
6	-LDET-	12+00	16+64	RT	1220
7	-LDET-	20+00	23+25	RT	880
				SUBTOTAL	7650
MISCELLANEOUS MATTING TO BE INSTALLED AS DIRECTED BY THE ENGINEER					1535
				TOTAL	9185
				SAY	9250

MATTING ON SLOPES FOR EROSION CONTROL

CONST SHEET NO.	LINE	FROM STATION	TO STATION	SIDE	ESTIMATE (SY)

PROJECT REFERENCE NO.	SHEET NO.
B-4635	EC-3A
ROADWAY DESIGN ENGINEER	HYDRAULICS ENGINEER

DIVISION OF HIGHWAYS
STATE OF NORTH CAROLINA

SOIL STABILIZATION TIMEFRAMES

SITE DESCRIPTION	STABILIZATION TIME	TIMEFRAME EXCEPTIONS
PERIMETER DIKES, SWALES, DITCHES AND SLOPES	7 DAYS	NONE
HIGH QUALITY WATER (HQW) ZONES	7 DAYS	NONE
SLOPES STEEPER THAN 3:1	7 DAYS	IF SLOPES ARE 10' OR LESS IN LENGTH AND ARE NOT STEEPER THAN 2:1, 14 DAYS ARE ALLOWED.
SLOPES 3:1 OR FLATTER	14 DAYS	7 DAYS FOR SLOPES GREATER THAN 50' IN LENGTH.
ALL OTHER AREAS WITH SLOPES FLATTER THAN 4:1	14 DAYS	NONE, EXCEPT FOR PERIMETERS AND HQW ZONES.

Dewberry
2610 WYCLIFF ROAD
SUITE 410
RALEIGH, NC 27607
PHONE: 919.881.9939
NC COA No. P-0929

PROJECT REFERENCE NO.	SHEET NO.
B-4635	EC-04/CONST.04
R/W SHEET NO.	
ROADWAY DESIGN ENGINEER	HYDRAULICS ENGINEER

REVISIONS
ROW REVISION -- September 25, 2019 -- Parcel 1 -- PUE extended to the west and labels updated. (AWP)
5/14/99

NAD 83/2011

-L- POT Sta. 7+00.00

BEGIN TIP PROJECT B-4635
-L- POT Sta. 7+66.80

+66.80 96.65' LT
+66.80 EX. R/W

PUE

JEFFREY TIPPETT, ET ALS
DB 2701 PG 380

BEGIN RESURFACING
-L- POT Sta. 12+21.07

END RESURFACING
BEGIN GRADE
-L- POT Sta. 14+80.00

SIBYL P. GODWIN
DB 1779 PG 927

BEGIN BRIDGE
-L- POT Sta. 18+97.31

END BRIDGE
-L- POT Sta. 20+63.89

-L- PC Sta. 21+05.89

+50.00 97.00' LT
+87 85.02' LT

SBG FROM END OF BRIDGE TO -L- STA. 21+03 LT/RT

CL B RIP RAP OUTLET PROTECTION 1 TON 5 S.Y. GEOTEXTILE

SBG FROM -L- STA. 18+59 LT/RT TO END OF BRIDGE +00.00 85' LT

CL II RIPRAP AT 2:1

REMOVE 15" PIPE AND FLUME

EXCAVATE TO ELEV. 113.7 102 CY

+25.00 EX. R/W

+00.00 EX. R/W

+50.00 EX. R/W

+00.00 82.00' RT

+20.00 115.00' RT

CL II RIPRAP AT 3:1

REMOVE EXIST. FLUMES AND 15" PIPE -L- STA. 19+04 LT/RT

IMPERVIOUS DIKES

EXCAVATE TO ELEV. 113.7 95 CY

81.98' RT

CL B RIP RAP OUTLET PROTECTION 1 TON 5 S.Y. GEOTEXTILE 115.14' RT

FUNNEL DRAIN
INLET INV=124.33'
INV OUT=123.53'

INV=119.31'

CONC. WW

36" SBG

BRIDGE SEAT ELEVATIONS
N 125.95
S 125.95
N 125.84
S 125.84
N 119.88
S 119.88

BRIDGE No. 9

MILLING AND OVERLAY

US 13 (FAYETTEVILLE HWY) 24' BS

EX. 10' LT
EX. 10' RT

12'
12'

S 86°13' 42.5" E

-L- +73 LT/RT

US 13

4' PS
10' PS

GREU 350 TL-3

8:1
50:1

TB 2GI
TYPE B-77

FUNNEL DRAIN
INLET INV=124.18'
INV OUT=123.58'

INV=116.01'

FUNNEL DRAIN
INLET INV=124.15'
INV OUT=123.65'

INV=112.54'

EXISTING R/W

S 32°20'46" E
93.91'

S 80°55'29" E
72.82'

S 70°35'14" E
38.98'

S 59°26'58" E
41.91'

JEFFREY TIPPETT, ET ALS
DB 2510 PG 641

JEFFREY TIPPETT, ET ALS
DB 2510 PG 641

-L- PC Sta. 10+00.00

-L- Sta. 12+29.56 =

SIBYL P. GODWIN
DB 1779 PG 927

SIBYL P. GODWIN
DB 1779 PG 927

SIBYL P. GODWIN
DB 1779 PG 927

PI Sta 21+49.92
Δ = 0° 07' 33.2" (RT)
D = 0° 08' 34.7"
L = 88.06'
T = 44.03'
R = 40,075.00'
Se = 0.02 (N.C.)

WOODS

NOTE: UTILIZE COIR FIBER MATTING ADJACENT TO WETLANDS/JURISDICTIONAL AREAS, AND AS DIRECTED

NOTE: THE OUTSIDE BUFFER, WETLAND, OR WATER BOUNDARY SHALL BE CLEARLY MARKED BY HIGHLY VISIBLE FENCING (ORANGE SAFETY FENCE)

NOTE:
UNCLASSIFIED STRUCTURE EXCACATION

PARCEL INDEX

PARCEL No.	SHEET No.	PROPERTY OWNER NAME
1	4	JEFFREY TIPPETT, ET ALS
2	4,5	SIBYL P. GODWIN
3	4,5	SIBYL P. GODWIN

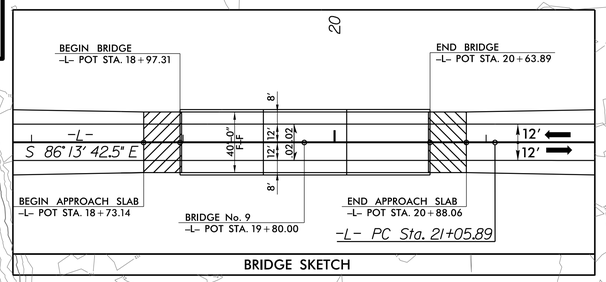

BRIDGE SKETCH

NOTE: IMPERVIOUS DIKES MAY BE MODIFIED AND/OR ELIMINATED AS DIRECTED

CLEARING AND GRUBBING
EROSION CONTROL FOR CONSTRUCTION SHEET 4

NOTE:
PLACE TEMPORARY ROCK SEDIMENT DAMS TYPE – B AND TEMPORARY ROCK SILT CHECKS TYPE – A AT DRAINAGE OUTLETS.

SEE SHEET 8 FOR -L- PROFILE

MATCH TO SHEET 5 -L- STA. 21+50.00

11/4/2019 4:52:05 PM
H:\projects\B-4635_HYD_EC_PSH.dgn
USER: bmcgee

Dewberry
2610 WYCLIFF ROAD
SUITE 410
RALEIGH, NC 27607
PHONE: 919.881.5939
NC COA No. F-0929

PROJECT REFERENCE NO.	SHEET NO.
B-4635	EC-05/CONST.05
R/W SHEET NO.	
ROADWAY DESIGN ENGINEER	HYDRAULICS ENGINEER

REVISIONS

5/14/99

MATCH TO SHEET 4 -L- STA. 21+50.00

PT Sta. 21+93.95

-L- POT Sta. 24+25.00
END GRADE
BEGIN RESURFACING

-L- POT Sta. 29+37.45 =
-DETL- POT Sta. 27+12.39
END RESURFACING
END TIP PROJECT B-4635

-L- POT Sta. 28+60.07 =
-DETL- Sta. 26+35.00

TO SPIVEYS CORNER

S 86°06'09.3" E
EX. MILLING AND OVERLAY

US 13 (FAYETTEVILLE HWY)
24 BSEL
-L-
US 13

SIBYL P. GODWIN
DB 1779 PG 927

PASTURE
WOODS
48" WW W/ IS BW
3 S ELEC
EXISTING R/W

10' PS
GREU 350
GREU 350 TL-3
2' PS
8:1

+50.00 97.00' LT
+00.00 85.12' LT
+50.00 85.02' LT
+75.00 EX. R/W
+00.00 EX. R/W
+50.00 EX. R/W
+00.00 81.98' RT
+50.00 81.89' RT
+50.00 115.00' RT
115.14' RT

BM=115
N: 511,567
E: 2,108,876
-BL- STA 18+44.11
O/S 103.91' RT
ELEV.=115.37
RR SPIKE IN BASE
OF 13" PINE

PARCEL INDEX

PARCEL No.	SHEET No.	PROPERTY OWNER NAME
1	4	JEFFREY TIPPETT, ET ALS
2	4,5	SIBYL P. GODWIN
3	4,5	SIBYL P. GODWIN

CLEARING AND GRUBBING
EROSION CONTROL FOR
CONSTRUCTION SHEET 5

NOTE:
PLACE TEMPORARY ROCK SEDIMENT DAMS TYPE – B AND TEMPORARY ROCK SILT CHECKS TYPE – A AT DRAINAGE OUTLETS.

NOTE: UTILIZE COIR FIBER MATTING ADJACENT TO WETLANDS/JURISDICTIONAL AREAS, AND AS DIRECTED

NOTE: THE OUTSIDE BUFFER, WETLAND, OR WATER BOUNDARY SHALL BE CLEARLY MARKED BY HIGHLY VISIBLE FENCING (ORANGE SAFETY FENCE)

SEE SHEET 8 FOR -L- PROFILE

NAD 83/2011

11/4/2019 4:52:10 PM
I:\B4635\Design\B4635_HYD_EC_PSH5.dgn
User: dwood

PROJECT REFERENCE NO.	SHEET NO.
B-4635	EC-06/CONST.06
R/W SHEET NO.	
ROADWAY DESIGN ENGINEER	HYDRAULICS ENGINEER

Dewberry
2610 WYCLIFF ROAD
SUITE 410
RALEIGH, NC 27607
PHONE: 919.881.9939
NC COA No. F-0929

CLEARING AND GRUBBING EROSION CONTROL FOR CONSTRUCTION SHEET 6

NOTE: PLACE TEMPORARY ROCK SEDIMENT DAMS TYPE – B AND TEMPORARY ROCK SILT CHECKS TYPE – A AT DRAINAGE OUTLETS.

NOTE: THE OUTSIDE BUFFER, WETLAND, OR WATER BOUNDARY SHALL BE CLEARLY MARKED BY HIGHLY VISIBLE FENCING (ORANGE SAFETY FENCE)

NOTE: UTILIZE COIR FIBER MATTING ADJACENT TO WETLANDS/JURISDICTIONAL AREAS, AND AS DIRECTED

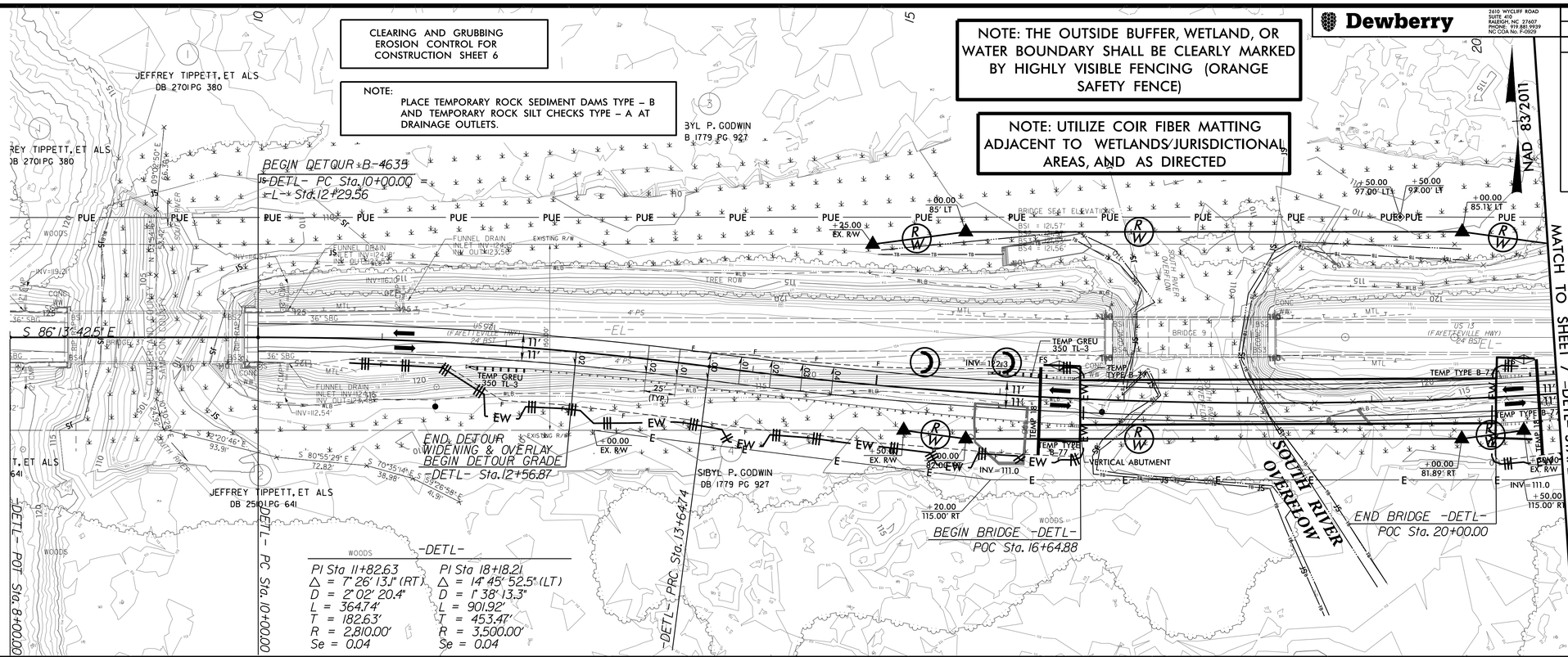

-DETL-

PI Sta 11+82.63	PI Sta 18+18.21
Δ = 7° 26' 13.1" (RT)	Δ = 14° 45' 52.5" (LT)
D = 2° 02' 20.4"	D = 1° 38' 13.3"
L = 364.74'	L = 901.92'
T = 182.63'	T = 453.47'
R = 2,810.00'	R = 3,500.00'
Se = 0.04	Se = 0.04

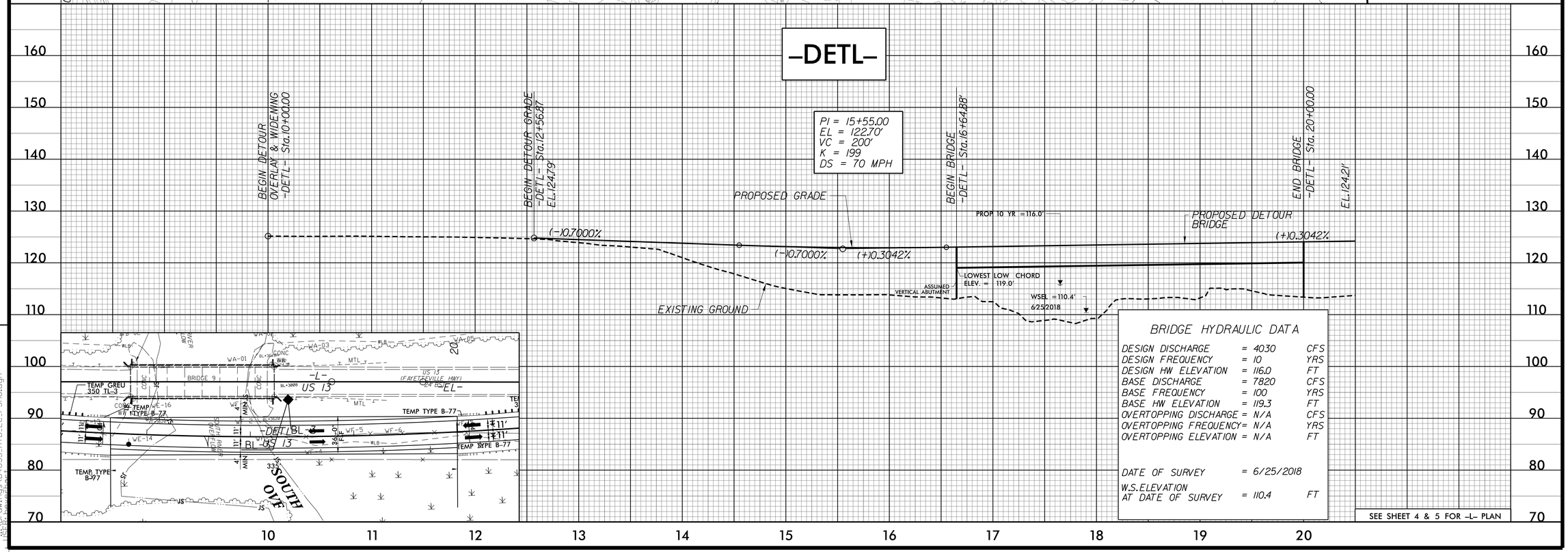

BRIDGE HYDRAULIC DATA

DESIGN DISCHARGE	= 4030	CFS
DESIGN FREQUENCY	= 10	YRS
DESIGN HW ELEVATION	= 116.0	FT
BASE DISCHARGE	= 7820	CFS
BASE FREQUENCY	= 100	YRS
BASE HW ELEVATION	= 119.3	FT
OVERTOPPING DISCHARGE	= N/A	CFS
OVERTOPPING FREQUENCY	= N/A	YRS
OVERTOPPING ELEVATION	= N/A	FT
DATE OF SURVEY	= 6/25/2018	
W.S. ELEVATION AT DATE OF SURVEY	= 110.4	FT

REVISIONS

5/14/99

11/4/2019 4:52:13 PM
Drawings\B4635_HYD_EC_PSH6.dgn

Dewberry	2610 WYCLIFF ROAD SUITE 410 RALEIGH, NC 27607 PHONE: 919.881.9939 NC COA No. F-0929	PROJECT REFERENCE NO. B-4635	SHEET NO. EC-07/CONST.07
		R/W SHEET NO.	
		ROADWAY DESIGN ENGINEER	HYDRAULICS ENGINEER

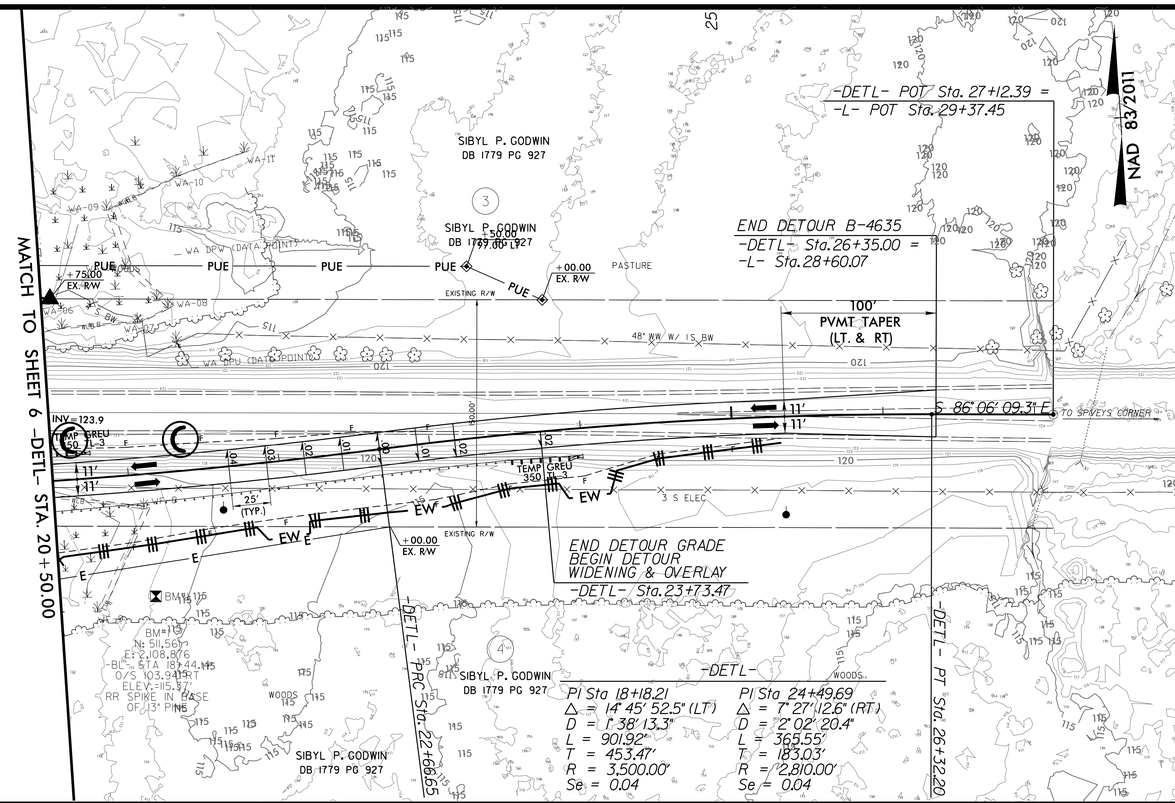

NOTE: THE OUTSIDE BUFFER, WETLAND, OR WATER BOUNDARY SHALL BE CLEARLY MARKED BY HIGHLY VISIBLE FENCING (ORANGE SAFETY FENCE)

NOTE: UTILIZE COIR FIBER MATTING ADJACENT TO WETLANDS/JURISDICTIONAL AREAS, AND AS DIRECTED

CLEARING AND GRUBBING EROSION CONTROL FOR CONSTRUCTION SHEET 7

NOTE:
PLACE TEMPORARY ROCK SEDIMENT DAMS TYPE – B AND TEMPORARY ROCK SILT CHECKS TYPE – A AT DRAINAGE OUTLETS.

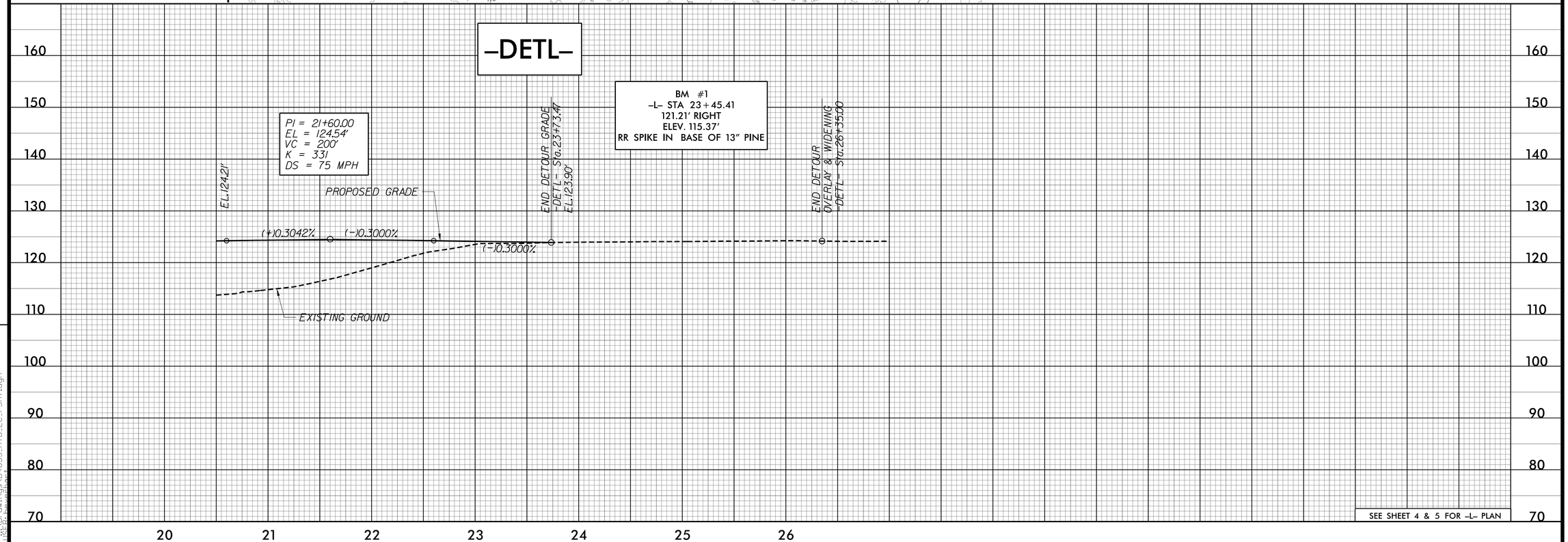

SEE SHEET 4 & 5 FOR -L- PLAN

REVISIONS

5/14/99

11/4/2019 4:52:16 PM
\\Drawings\B4635_HYD_EC_PSH7.dgn
USER: beverhart

Dewberry	PROJECT REFERENCE NO.	SHEET NO.
2610 WYCLIFF ROAD SUITE 410 RALEIGH, NC 27607 PHONE: 919.881.9939 NC COA No. F-0929	B-4635	EC-08/CONST.04
	R/W SHEET NO.	
	ROADWAY DESIGN ENGINEER	HYDRAULICS ENGINEER

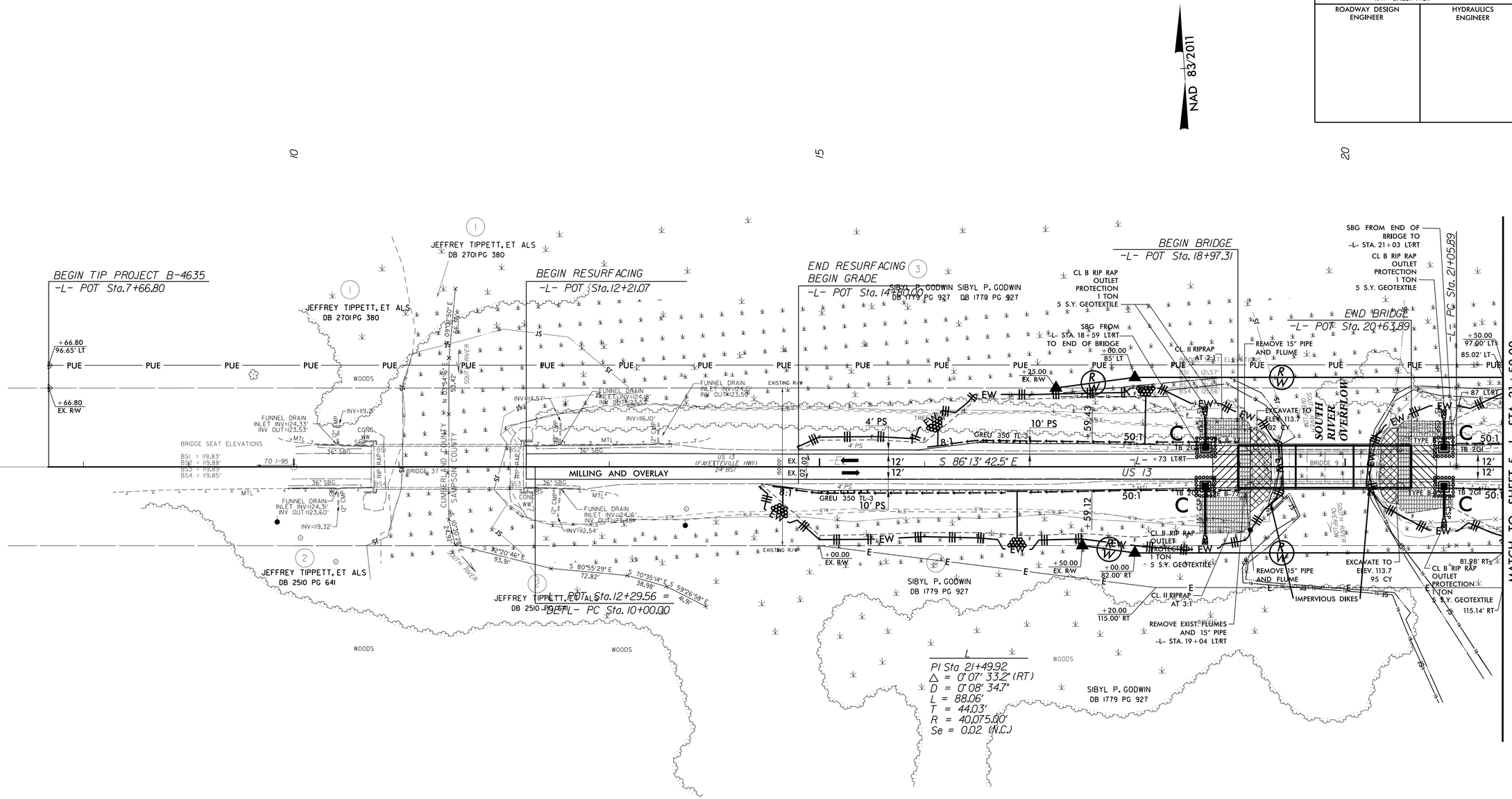

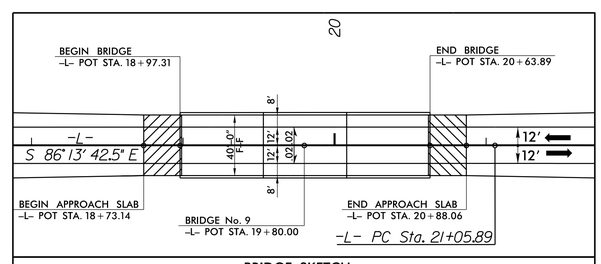

BRIDGE SKETCH

NOTE:

UNCLASSIFIED STRUCTURE EXCACATION

PARCEL INDEX

PARCEL No.	SHEET No.	PROPERTY OWNER NAME
1	4	JEFFREY TIPPETT, ET ALS
2	4,5	SIBYL P. GODWIN
3	4,5	SIBYL P. GODWIN

NOTE: IMPERVIOUS DIKES MAY BE MODIFIED AND/OR ELIMINATED AS DIRECTED

NOTE: UTILIZE COIR FIBER MATTING ADJACENT TO WETLANDS/JURISDICTIONAL AREAS, AND AS DIRECTED

NOTE: THE OUTSIDE BUFFER, WETLAND, OR WATER BOUNDARY SHALL BE CLEARLY MARKED BY HIGHLY VISIBLE FENCING (ORANGE SAFETY FENCE)

Place Matting for Erosion Control on Slopes Adjacent to Permitted Wetlands as Work Allows.

SEE SHEET 8 FOR -L- PROFILE

REVISIONS

ROW REVISION - September 25, 2019 - Parcel 1 - PUE extended to the west and labels updated. (AMP)

5/14/99

11/4/2019 4:52:19 PM
\\Drawings\B4635_HYD_EC_PSH8.dgn
USER: beverhart

Dewberry	PROJECT REFERENCE NO.	SHEET NO.
	B-4635	EC-09/CONST.05
	R/W SHEET NO.	
	ROADWAY DESIGN ENGINEER	HYDRAULICS ENGINEER

2610 WYCLIFF ROAD
SUITE 410
RALEIGH, NC 27607
PHONE: 919.881.9939
NC COA No. F-0929

NAD 83/2011

REVISIONS

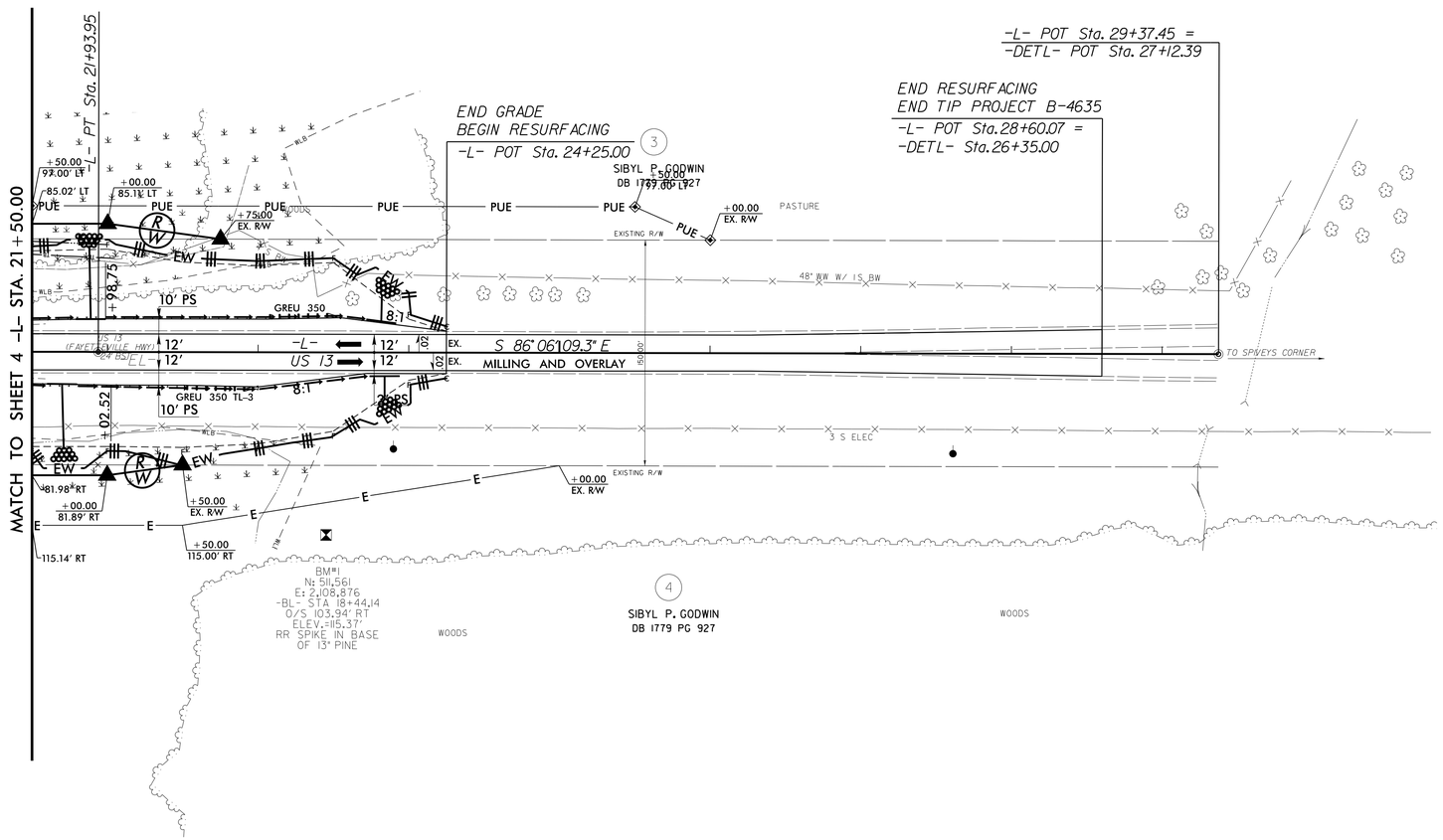

PARCEL INDEX

PARCEL No.	SHEET No.	PROPERTY OWNER NAME
1	4	JEFFREY TIPPETT, ET ALS
2	4,5	SIBYL P. GODWIN
3	4,5	SIBYL P. GODWIN

Place Matting for Erosion Control on Slopes Adjacent to Permitted Wetlands as Work Allows.

NOTE: UTILIZE COIR FIBER MATTING ADJACENT TO WETLANDS/JURISDICTIONAL AREAS, AND AS DIRECTED

NOTE: THE OUTSIDE BUFFER, WETLAND, OR WATER BOUNDARY SHALL BE CLEARLY MARKED BY HIGHLY VISIBLE FENCING (ORANGE SAFETY FENCE)

SEE SHEET 8 FOR -L- PROFILE

5/14/99
11/4/2019 4:52:22 PM
Drawings\B4635_HYD_EC_PSH9.dgn
USER: beverhart

Place Matting for Erosion Control on Slopes Adjacent to Permitted Wetlands as Work Allows.

NOTE: UTILIZE COIR FIBER MATTING ADJACENT TO WETLANDS/JURISDICTIONAL AREAS, AND AS DIRECTED

NOTE: THE OUTSIDE BUFFER, WETLAND, OR WATER BOUNDARY SHALL BE CLEARLY MARKED BY HIGHLY VISIBLE FENCING (ORANGE SAFETY FENCE)

Dewberry
2610 WYCLIFF ROAD
SUITE 410
RALEIGH, NC 27607
PHONE: 919.881.9929
NC COA No. P-0929

PROJECT REFERENCE NO.	SHEET NO.
B-4635	EC-10/CONST.06
R/W SHEET NO.	
ROADWAY DESIGN ENGINEER	HYDRAULICS ENGINEER

REVISIONS

5/14/99

JEFFREY TIPPETT, ET ALS
DB 2701PG 380

SIBYL P. GODWIN
DB 1779 PG 927

JEFFREY TIPPETT, ET ALS
DB 2501 PG 641

BEGIN DETOUR B-4635
-DETL- PC Sta.10+00.00 = -L- Sta.12+29.56

END DETOUR
WIDENING & OVERLAY
BEGIN DETOUR GRADE
-DETL- Sta.12+56.87

BEGIN BRIDGE -DETL-
POC Sta. 16+64.88

END BRIDGE -DETL-
POC Sta. 20+00.00

MATCH TO SHEET 7 -DETL- STA. 20+50.00

NAD 83/2011

SOUTH RIVER OVERFLOW

-DETL- POT Sta.8+00.00

-DETL- PC Sta.10+00.00

-DETL- PRC Sta.

PI Sta 11+82.63	PI Sta 18+18.21
Δ = 7° 26' 13.1" (RT)	Δ = 14° 45' 52.5" (LT)
D = 2° 02' 20.4"	D = 1° 38' 13.3"
L = 364.74'	L = 901.92'
T = 182.63'	T = 453.47'
R = 2,810.00'	R = 3,500.00'
Se = 0.04	Se = 0.04

-DETL-

PI = 15+55.00
EL = 122.70'
VC = 200'
K = 199
DS = 70 MPH

PROPOSED GRADE

EXISTING GROUND

(−)0.7000%

(+)0.3042%

BEGIN DETOUR OVERLAY & WIDENING -DETL- Sta.10+00.00

BEGIN DETOUR GRADE -DETL- Sta.12+56.87 EL.124.79'

BEGIN BRIDGE -DETL- Sta.16+64.88'

END BRIDGE -DETL- Sta. 20+00.00 EL.124.21'

PROP 10 YR =116.0'

PROPOSED DETOUR BRIDGE

LOWEST LOW CHORD ELEV. = 119.0'

ASSUMED VERTICAL ABUTMENT

WSEL =110.4'
6/25/2018

BRIDGE HYDRAULIC DATA

DESIGN DISCHARGE	= 4030	CFS
DESIGN FREQUENCY	= 10	YRS
DESIGN HW ELEVATION	= 116.0	FT
BASE DISCHARGE	= 7820	CFS
BASE FREQUENCY	= 100	YRS
BASE HW ELEVATION	= 119.3	FT
OVERTOPPING DISCHARGE	= N/A	CFS
OVERTOPPING FREQUENCY	= N/A	YRS
OVERTOPPING ELEVATION	= N/A	FT
DATE OF SURVEY	= 6/25/2018	
W.S.ELEVATION AT DATE OF SURVEY	= 110.4	FT

SEE SHEET 4 & 5 FOR -L- PLAN

11/4/2019 4:53:24 PM
USER: RWORLEY-T
C:\Projects\B-4635\Roadway\Hyd\B4635_EC_PSH10.dgn

Dewberry
2610 WYCLIFF ROAD
SUITE 410
RALEIGH, NC 27607
PHONE: 919.881.9929
NC COA No. P-0929

PROJECT REFERENCE NO.	SHEET NO.
B-4635	EC-11/CONST.07
R/W SHEET NO.	
ROADWAY DESIGN ENGINEER	HYDRAULICS ENGINEER

REVISIONS

6/14/99

25

NAD 83/2011

-DETL- POT Sta. 27+12.39 =
-L- POT Sta. 29+37.45

MATCH TO SHEET 6 -DETL- STA. 20+50.00

SIBYL P. GODWIN
DB 1779 PG 927

3

SIBYL P. GODWIN
DB 1779 PG 927

+50.00
-DETL- LT

+75.00
EX. R/W

PUE PUE PUE PUE PUE

+00.00
EX. R/W

EXISTING R/W

PASTURE

WOODS

WA-11 WA-10 WA-09 WA-08 WA-07 WA-06

WA DPW (DATA POINT)

S BW

END DETOUR B-4635
-DETL- Sta. 26+35.00 =
-L- Sta. 28+60.07

100'
PVMT TAPER
(LT. & RT)

48" WW W/ IS BW

WA DPU (DATA POINT)

S 86° 06' 09.31" E TO SPIVEYS CORNER

INV. 123.9
TEMP GREU
350 LF 3

11'
11'

10 10 10 10 10 10 10

25'
(TYP.)

TEMP GREU
350 LF 3

EW

3 S ELEC

EXISTING R/W

+00.00
EX. R/W

END DETOUR GRADE
BEGIN DETOUR
WIDENING & OVERLAY
-DETL- Sta. 23+73.47

BM#1

BM#1
N: 511,561
E: 2,108,876
-BL- STA 18+44.14
O/S 103.94' RT
ELEV.=115.37'
RR SPIKE IN BASE
OF 13" PINE

WOODS

4

SIBYL P. GODWIN
DB 1779 PG 927

SIBYL P. GODWIN
DB 1779 PG 927

-DETL- PRC Sta. 22+66.65

-DETL- PT Sta. 26+32.20

WOODS

4+49.69
27° 12.6" (RT)

D = 1° 38' 13.3"
L = 901.92'
T = 453.47'
R = 3,500.00'
Se = 0.04

D = 2° 02' 20.4"
L = 365.55'
T = 183.03'
R = 2,810.00'
Se = 0.04

NOTE: UTILIZE COIR FIBER MATTING ADJACENT TO WETLANDS/JURISDICTIONAL AREAS, AND AS DIRECTED

NOTE: THE OUTSIDE BUFFER, WETLAND, OR WATER BOUNDARY SHALL BE CLEARLY MARKED BY HIGHLY VISIBLE FENCING (ORANGE SAFETY FENCE)

Place Matting for Erosion Control on Slopes Adjacent to Permitted Wetlands as Work Allows.

-DETL-

BM #1
-L- STA 23+45.41
121.21' RIGHT
ELEV. 115.37'
RR SPIKE IN BASE OF 13" PINE

PI = 21+60.00
EL = 124.54'
VC = 200'
K = 331
DS = 75 MPH

EL.124.21'

PROPOSED GRADE

(+)0.3042%

(-)0.3000%

(-)0.3000%

END DETOUR GRADE
-DETL- Sta.23+73.47
EL.123.90'

END DETOUR
OVERLAY & WIDENING
-DETL- Sta.26+35.00

EXISTING GROUND

160 150 140 130 120 110 100 90 80 70

20 21 22 23 24 25 26

SEE SHEET 4 & 5 FOR -L- PLAN

11/4/2019 4:53:27 PM
USER: hwarfield
I:\3263_PYD_EC_PSH11.dgn

T.I.P. NO.	SHEET NO.
B–4635	UO–1

NOTE:
ALL UTILITY WORK SHOWN ON THIS SHEET WILL BE DONE BY OTHERS. NO PAYMENT WILL BE MADE TO THE CONTRACTOR FOR UTILITY WORK SHOWN ON THIS SHEET.

STATE OF NORTH CAROLINA
DIVISION OF HIGHWAYS

UTILITIES BY OTHERS PLANS
SAMPSON COUNTY

LOCATION: REPLACE BRIDGE #9 OVER SOUTH RIVER OVERFLOW ON US 13

TYPE OF WORK: GRADING, DRAINAGE, PAVING AND STRUCTURE

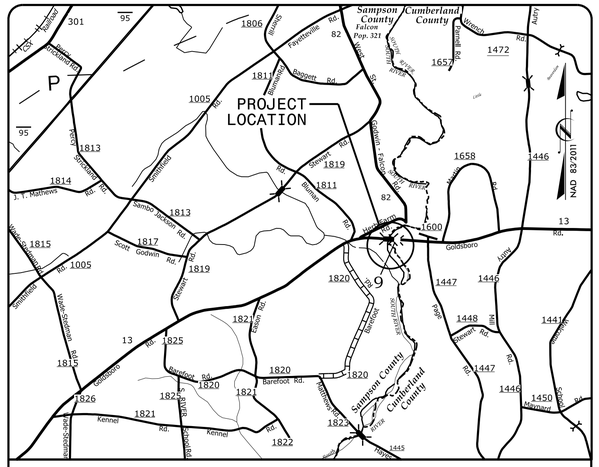

VICINITY MAP

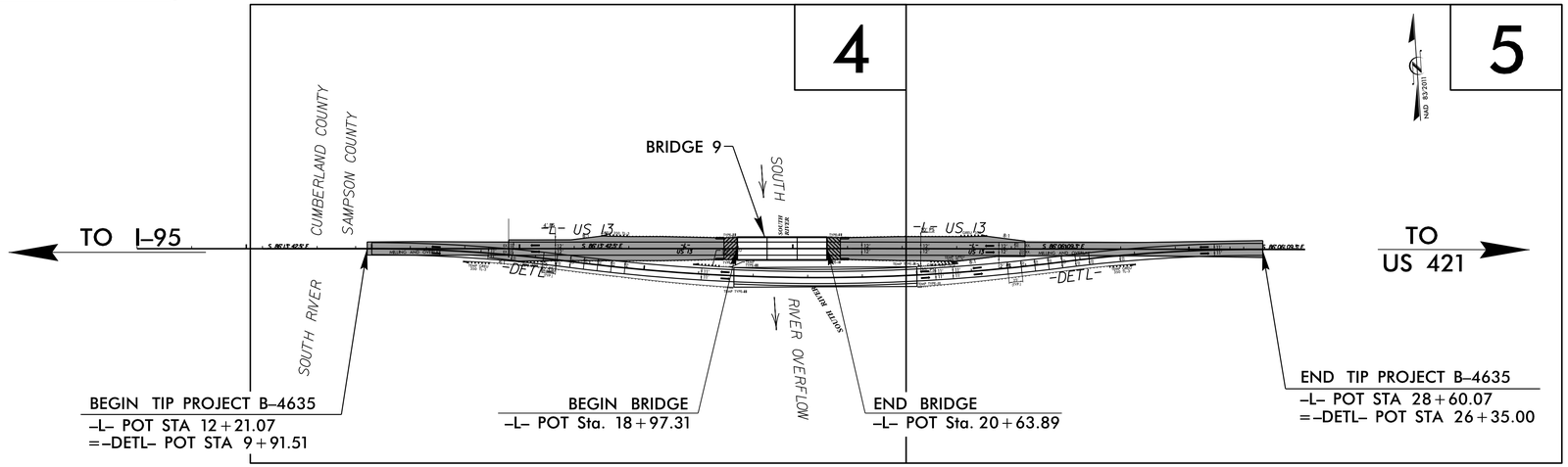

GRAPHIC SCALES

50 25 0 50 100
PLANS

50 25 0 50 100
PROFILE (HORIZONTAL)

10 5 0 10 20
PROFILE (VERTICAL)

INDEX OF SHEETS

SHEET NO.:	DESCRIPTION:
UO–1	TITLE SHEET
UO–02 THRU UO–03	UBO PLAN SHEETS

UTILITY OWNERS WITH CONFLICTS

(A) POWER (TRANSMISSION & DISTRIBUTION) – SOUTH RIVER EMC

PREPARED IN THE OFFICE OF:

TELICS
1415 WELBBORN STREET, SUITE 102
HIGH POINT, NC 27262
(336) 887-1004

Jim Brooks — UTILITY PROJECT MANAGER
Chris Kennedy — PROJECT UTILITY COORDINATOR

DIVISION OF HIGHWAYS
UTILITIES UNIT
1555 MAIL SERVICES CENTER
RALEIGH NC 27699–1555
PHONE (919) 707–6690
FAX (919) 250–4151

Bo Hemphill, PE — UTILITIES REGIONAL ENGINEER
Nabil Hamdan — UTILITIES ENGINEER
Kyle Pleasant — UTILITIES AREA COORDINATOR
Dayton Martin — UTILITIES COORDINATOR

TIP PROJECT: B–4635

09/08/99
07-JUN-2019 14:36
C:\Users\winston34\2018\B-4635\Utilities\Engineering\UBO\Proj\B-4635_ut_tsh_U001_psh.dgn
$$$$USERNAME$$$$

PROJECT REFERENCE NO.	SHEET NO.
B-4635	UO-2
THIS SHEET CORRESPONDS TO RDY-4	

UTILITIES BY OTHERS

ALL PROPOSED UTILITY WORK SHOWN ON THIS SHEET WILL BE DONE BY OTHERS. NO PAYMENT WILL BE MADE TO THE CONTRACTOR FOR PROPOSED UTILITY WORK SHOWN ON THIS SHEET.

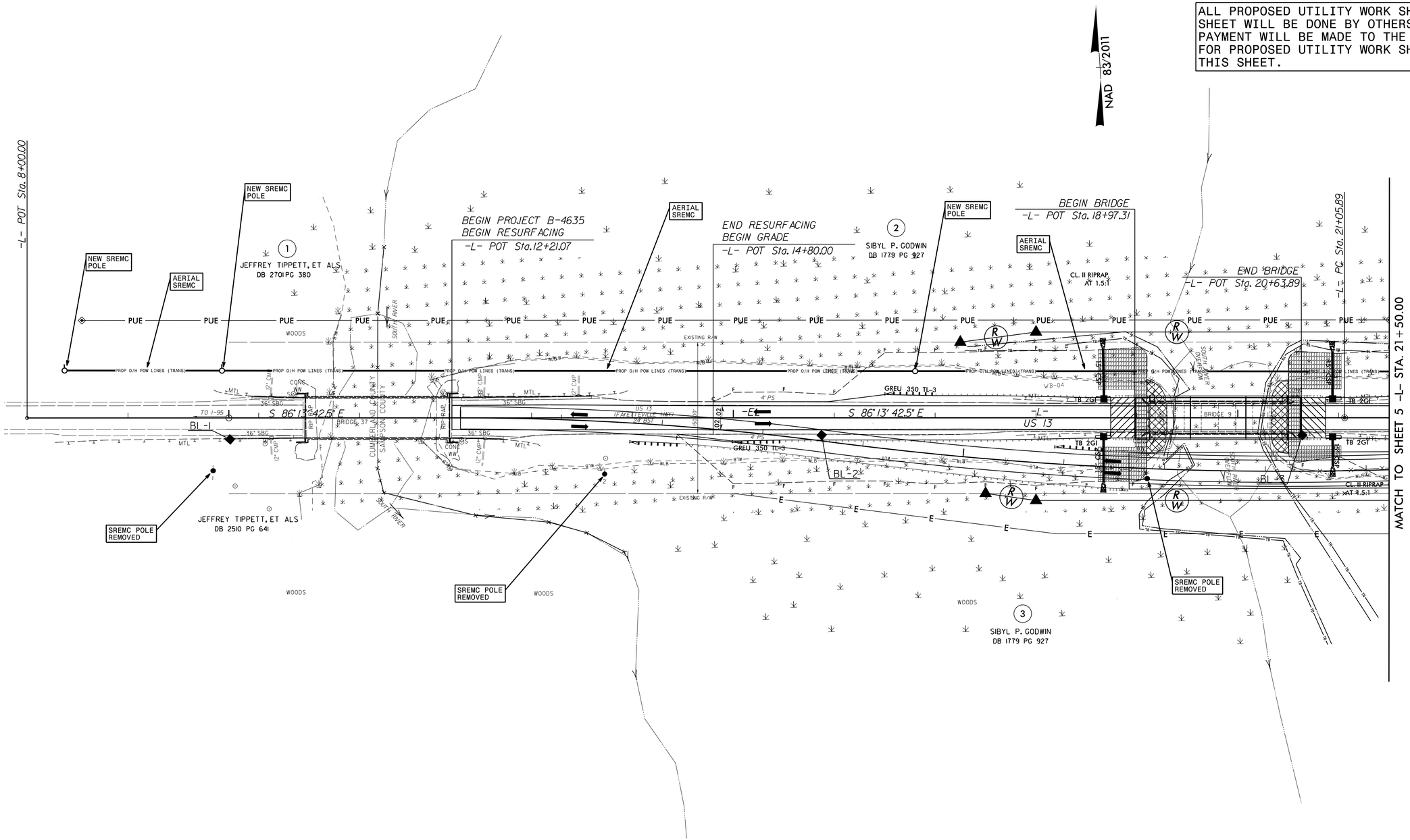

5/14/99

05-JUN-2019 14:23
\2018\B-4635\Utilities\Engineering\UBO\Proj\B-4635_ut_rdy4_U002_psh.dgn
$$$$USERNAME$$$$

PROJECT REFERENCE NO.	SHEET NO.
B-4635	UO-3
THIS SHEET CORRESPONDS TO RDY-5	

UTILITIES BY OTHERS

ALL PROPOSED UTILITY WORK SHOWN ON THIS SHEET WILL BE DONE BY OTHERS. NO PAYMENT WILL BE MADE TO THE CONTRACTOR FOR PROPOSED UTILITY WORK SHOWN ON THIS SHEET.

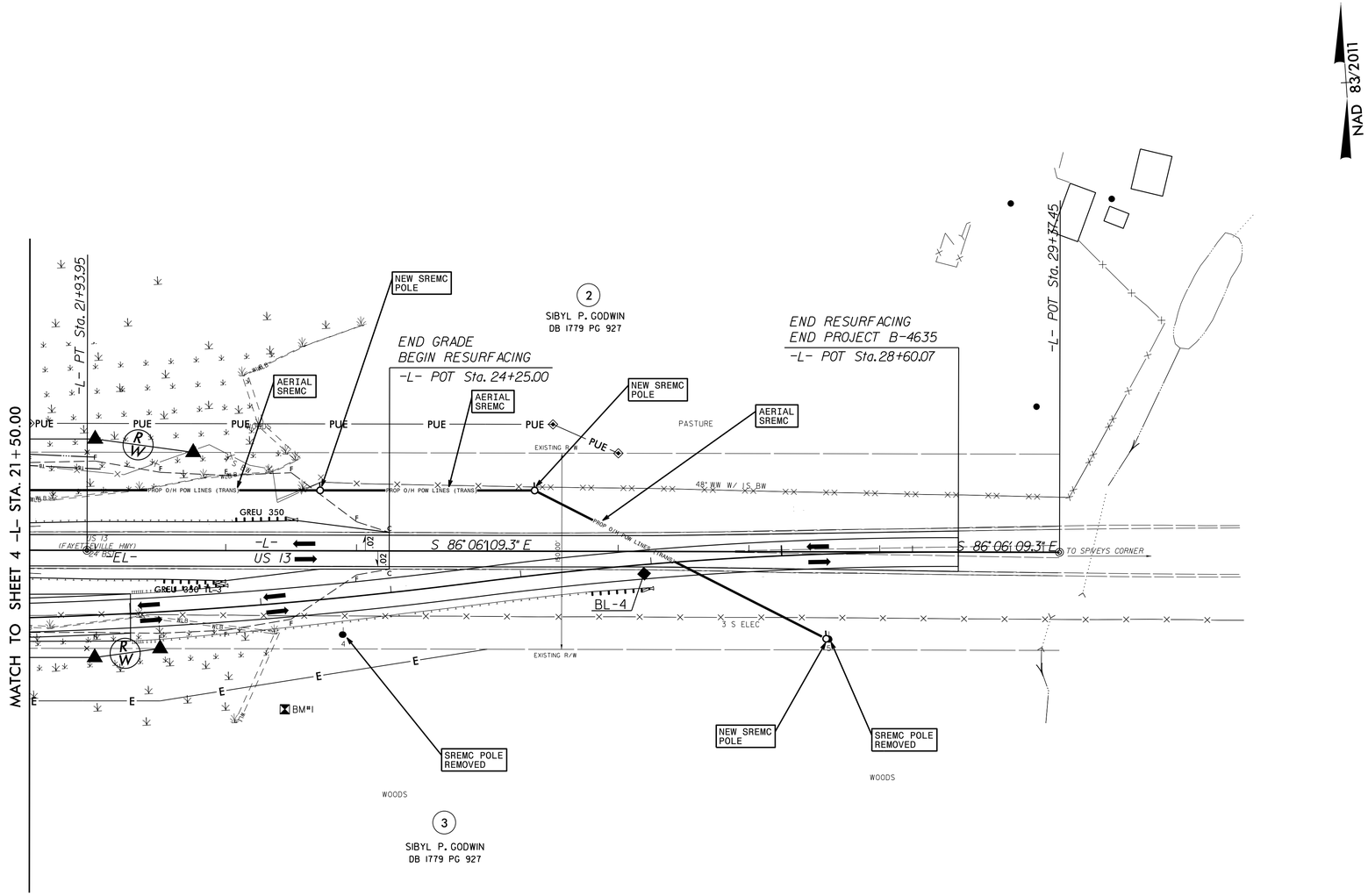

5/14/99

05-JUN-2019 14:58
\2018\B-4635\Utilities\Engineering\UBO\Proj\B-4635_ut_rdy5_UO03_psh.dgn
$$$$USERNAME$$$$

8/23/99

PROJ. REFERENCE NO.	SHEET NO.
B-4635	X-0

B–4635
REPLACE BRIDGE #9 OVER SOUTH RIVER OVERFLOW ON US 13
CROSS–SECTIONS

INDEX OF SHEETS

TITLE	SHEET NO.
CROSS SECTION SUMMARY	X–1A
–L–	X–1 THRU X–5
–DETL–	X–6 THRU X–11

...\B4635_RDY_XPL_COVER.dgn

PROJ. REFERENCE NO.	SHEET NO.
B-4635	X-1A

STATE OF NORTH CAROLINA
DIVISION OF HIGHWAYS

NOTE: EMBANKMENT COLUMN DOES NOT INCLUDES BACKFILL FOR UNDERCUT

CROSS-SECTION SUMMARY

Station Detl	Uncl. Exc. (cu. yd.)	Embt (cu. yd.)	Undercut (cu. yd.)	Station L	Uncl. Exc. (cu. yd.)	Embt (cu. yd.)	Undercut (cu. yd.)
11+00.00	0	0	0	20+63.89	0	0	0
11+50.00	6	1	0	21+00.00	0	242	0
12+00.00	8	49	0	21+50.00	0	272	0
12+50.00	10	137	0	22+00.00	0	375	70
13+00.00	9	222	0	22+50.00	9	285	117
13+50.00	7	336	0	23+00.00	27	152	0
14+00.00	8	479	0	23+50.00	45	157	0
14+50.00	7	594	0	24+00.00	33	82	0
15+00.00	3	708	0	24+25.00	6	0	0
15+50.00	0	799	0				
16+00.00	0	862	0				
16+50.00	0	924	0				
16+64.87	0	278	0				

Station Detl	Uncl. Exc. (cu. yd.)	Embt (cu. yd.)	Undercut (cu. yd.)
20+00.00	0	0	0
20+50.00	0	1036	0
21+00.00	0	900	0
21+50.00	0	716	0
22+00.00	0	541	0
22+50.00	3	408	0
23+00.00	11	306	0
23+50.00	19	197	0
24+00.00	17	103	0
24+50.00	10	39	0
25+00.00	7	3	0

Station L	Uncl. Exc. (cu. yd.)	Embt (cu. yd.)	Undercut (cu. yd.)
14+80.00	0	0	0
15+00.00	17	8	0
15+50.00	142	20	193
16+00.00	111	0	180
16+50.00	21	84	215
17+00.00	23	187	283
17+50.00	6	236	326
18+00.00	0	325	403
18+50.00	0	315	389
18+97.31	0	363	0

Note: Approximate quantities only. Unclassified excavation, fine grading, clearing and grubbing, breaking of existing asphalt, and removal of existing asphalt will be paid for at the lump sum price for "Grading".

6/23/16

0 5 10	PROJ. REFERENCE NO.	SHEET NO.
	B-4635	X-1

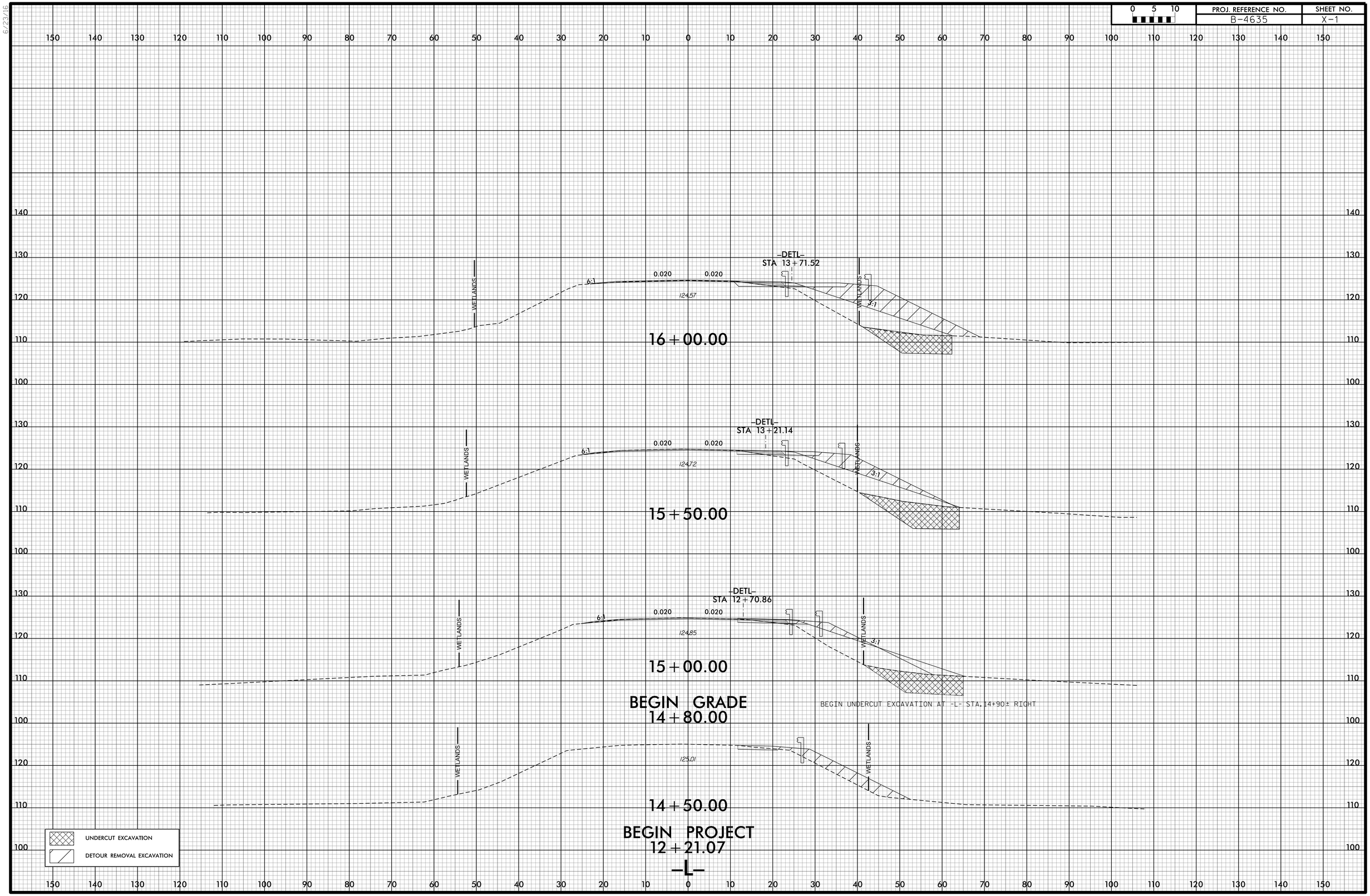

6/23/16

0 5 10	PROJ. REFERENCE NO.	SHEET NO.
	B-4635	X-2

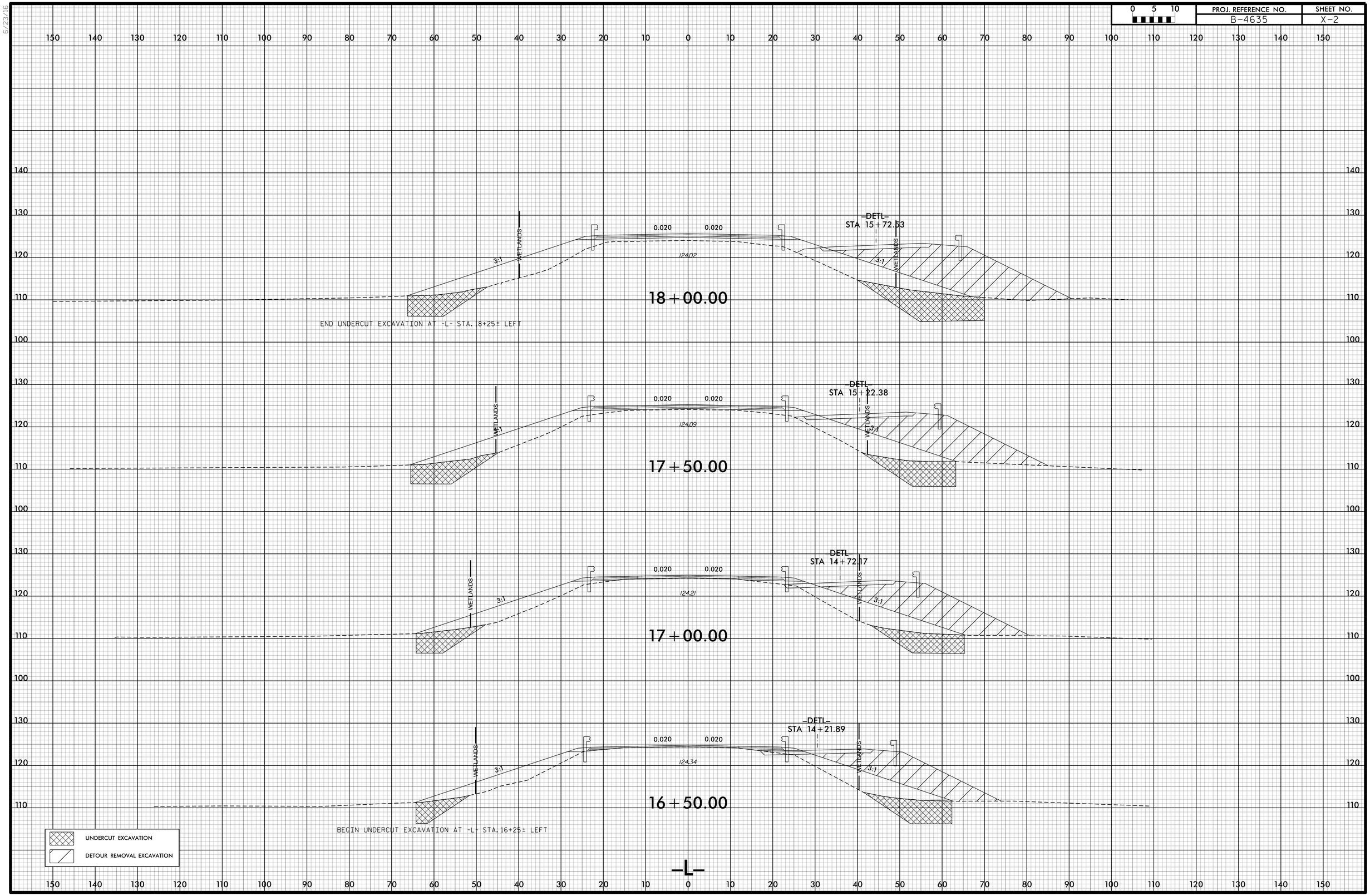

6/23/16

0 5 10	PROJ. REFERENCE NO.	SHEET NO.
	B-4635	X-3

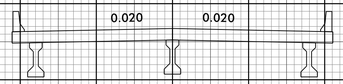

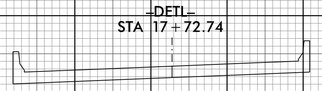

108.89

20+00.00

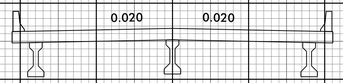



108.77

19+50.00

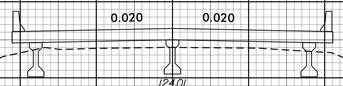

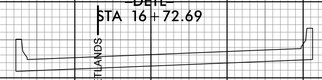

19+00.00

BEGIN BRIDGE
18+97.31

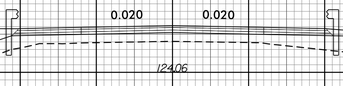

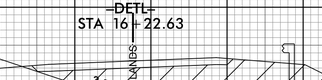

18+50.00

END UNDERCUT EXCAVATION AT -L- STA. 18+75± RIGHT

ROCK PLATING
UNDERCUT EXCAVATION
DETOUR REMOVAL EXCAVATION

–L–

6/23/16

0 5 10	PROJ. REFERENCE NO.	SHEET NO.
	B-4635	X-4

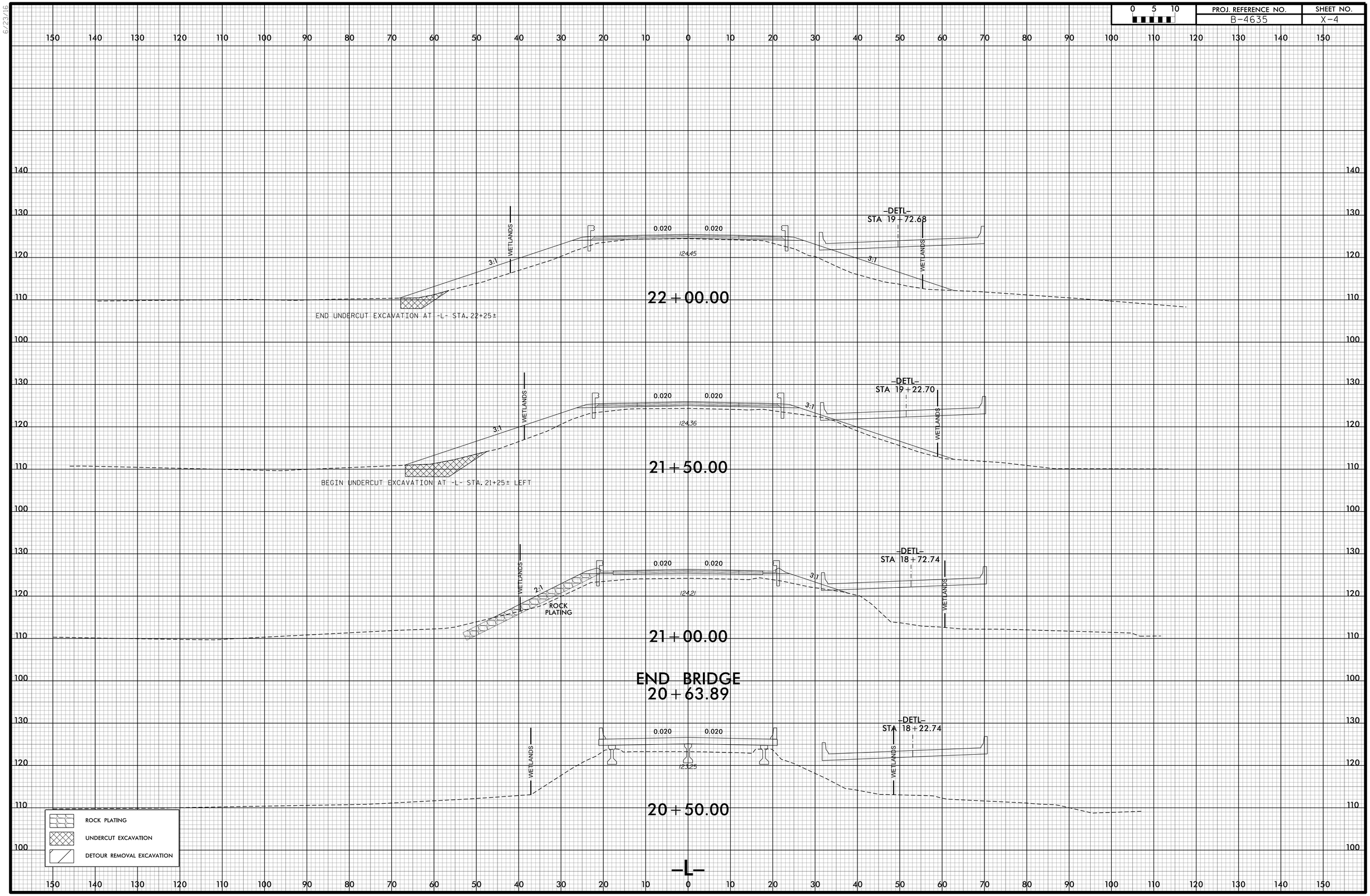

6/23/16

0 5 10	PROJ. REFERENCE NO.	SHEET NO.
	B-4635	X-5

END PROJECT
28+60.07

–DETL–
STA 21+98.41

EX EX

124.30

END GRADE
24+25.00

–DETL–
STA 21+73.27

3:1 0.020 0.020

124.34

24+00.00

–DETL–
STA 21+23.03

WETLANDS

3:1 0.020 0.020 3:1

124.46

23+50.00

–DETL–
STA 20+72.86

WETLANDS

3:1 0.020 0.020 3:1 WETLANDS

124.43

23+00.00

–DETL–
STA 20+22.75

WETLANDS

3:1 0.020 0.020 3:1 WETLANDS

124.48

22+50.00

BEGIN UNDERCUT EXCAVATION AT -L- STA. 22+25±
END UNDERCUT EXCAVATION AT -L- STA. 22+75±

UNDERCUT EXCAVATION

DETOUR REMOVAL EXCAVATION

–L–

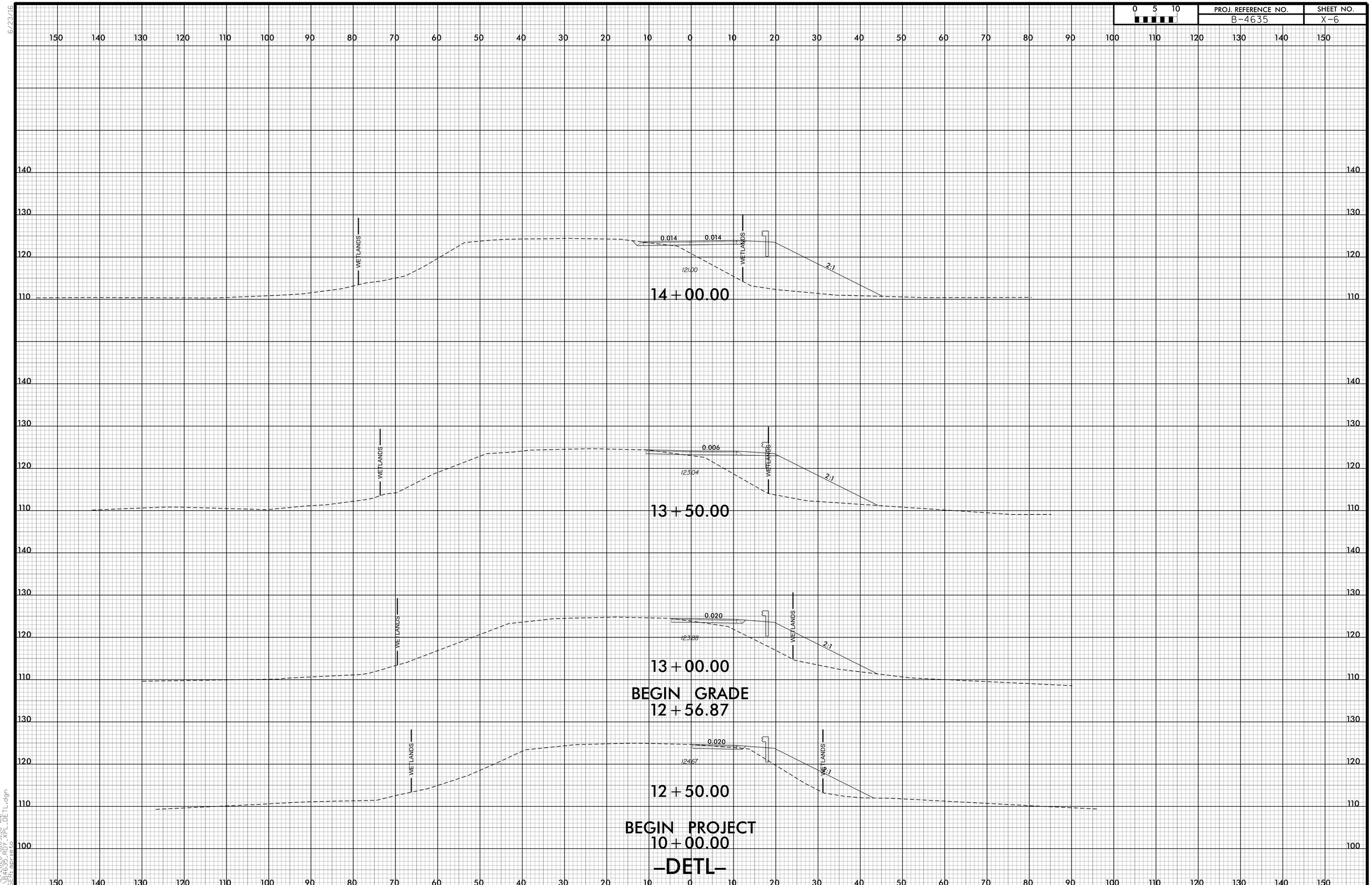

6/23/16

2/12/2020 8:09:58 AM
\\B4635_RDY_XPL_DETL.dgn
USER: aprieto

0 5 10	PROJ. REFERENCE NO.	SHEET NO.
	B-4635	X-7

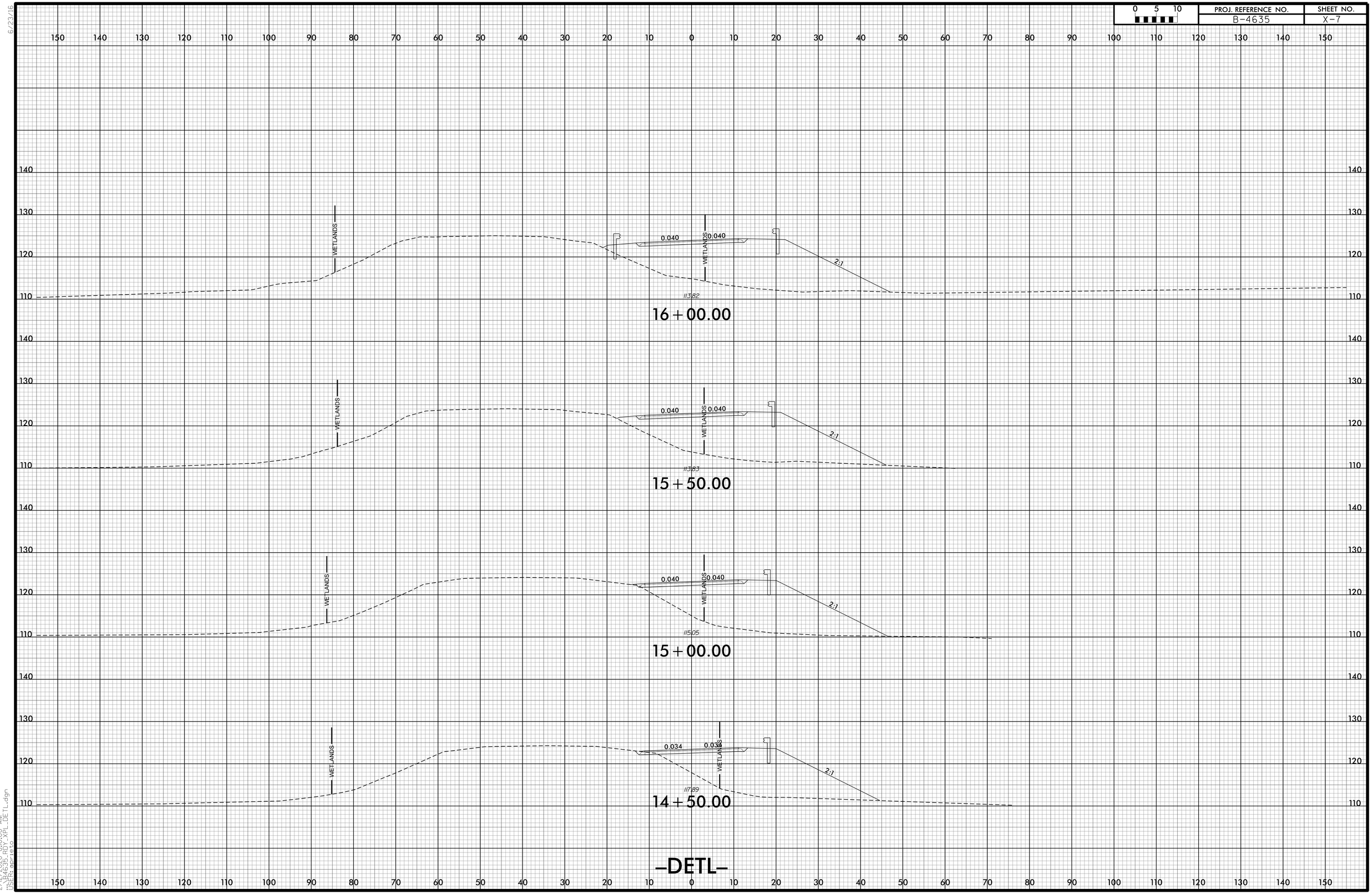

2/12/2020 8:10:00 AM
\\B4635_RDY_XPL_DETL.dgn
USER: aprieto

6/23/16

0 5 10	PROJ. REFERENCE NO.	SHEET NO.
	B-4635	X-8

150 140 130 120 110 100 90 80 70 60 50 40 30 20 10 0 10 20 30 40 50 60 70 80 90 100 110 120 130 140 150

130 120 110 100

WETLANDS

WETLANDS

0.040 0.040

109.27

18+00.00

130 120 110 100

0.040 0.040

106.89

17+50.00

130 120 110 100

0.040 0.040

112.49

17+00.00

140 130 120 110 100

BEGIN DETOUR BRIDGE

16+64.88

WETLANDS

WETLANDS

0.040 0.040

2:1

113.22

16+50.00

–DETL–

150 140 130 120 110 100 90 80 70 60 50 40 30 20 10 0 10 20 30 40 50 60 70 80 90 100 110 120 130 140 150

2/12/2020 8:10:02 AM
\\B4635_RDY_XPL_DETL.dgn
USER: aprieto

0 5 10

PROJ. REFERENCE NO.	SHEET NO.
B-4635	X-9

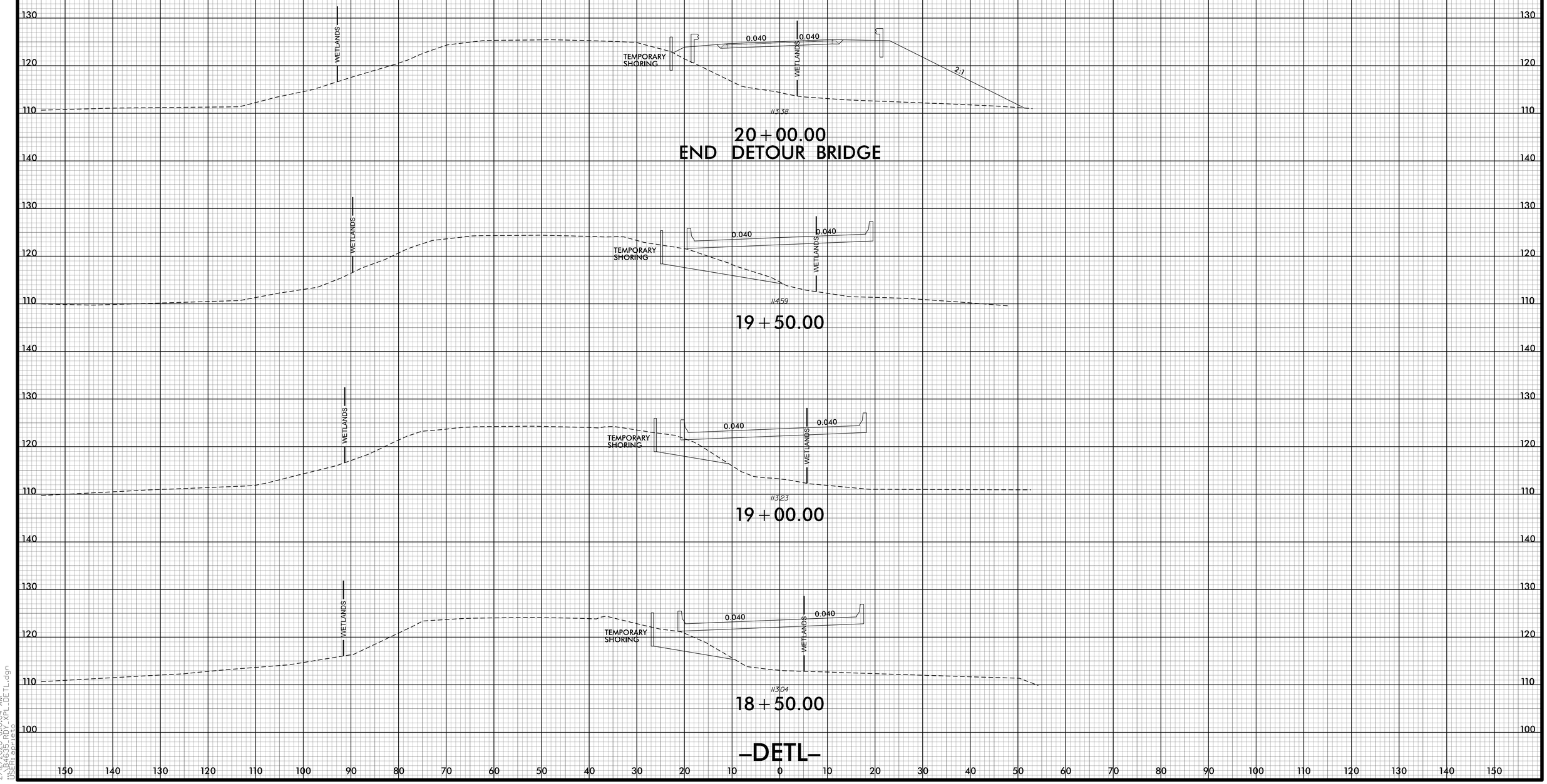

2/12/2020 8:10:04 AM
...\B4635_RDY_XPL_DETL.dgn
USER: aprieto

6/23/16

0 5 10	PROJ. REFERENCE NO.	SHEET NO.
	B-4635	X-10

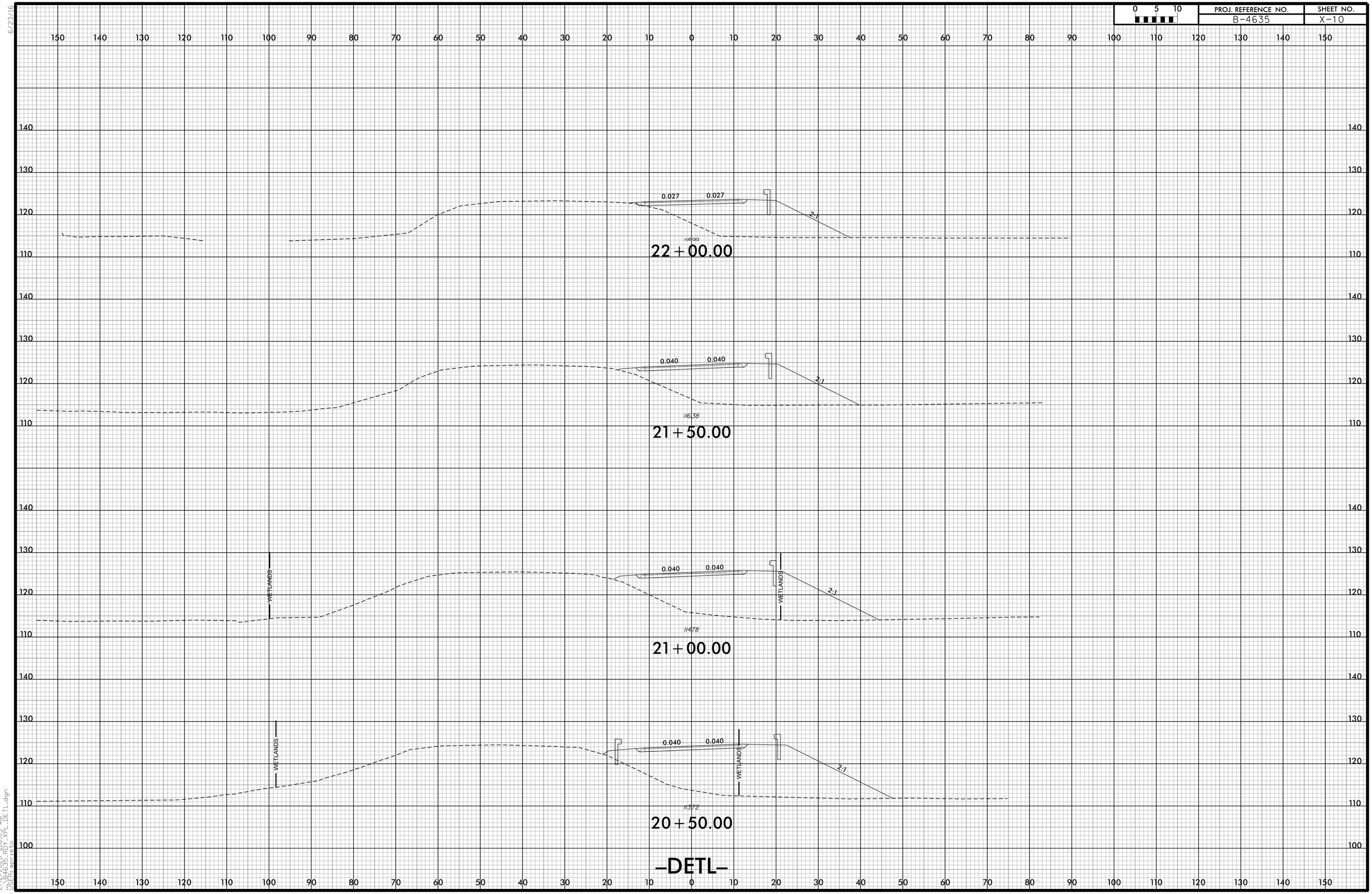

–DETL–

2/12/2020 8:10:05 AM
...\B4635_RDY_XPL_DETL.dgn
USER: aprieto

0 5 10	PROJ. REFERENCE NO.	SHEET NO.
	B-4635	X-11

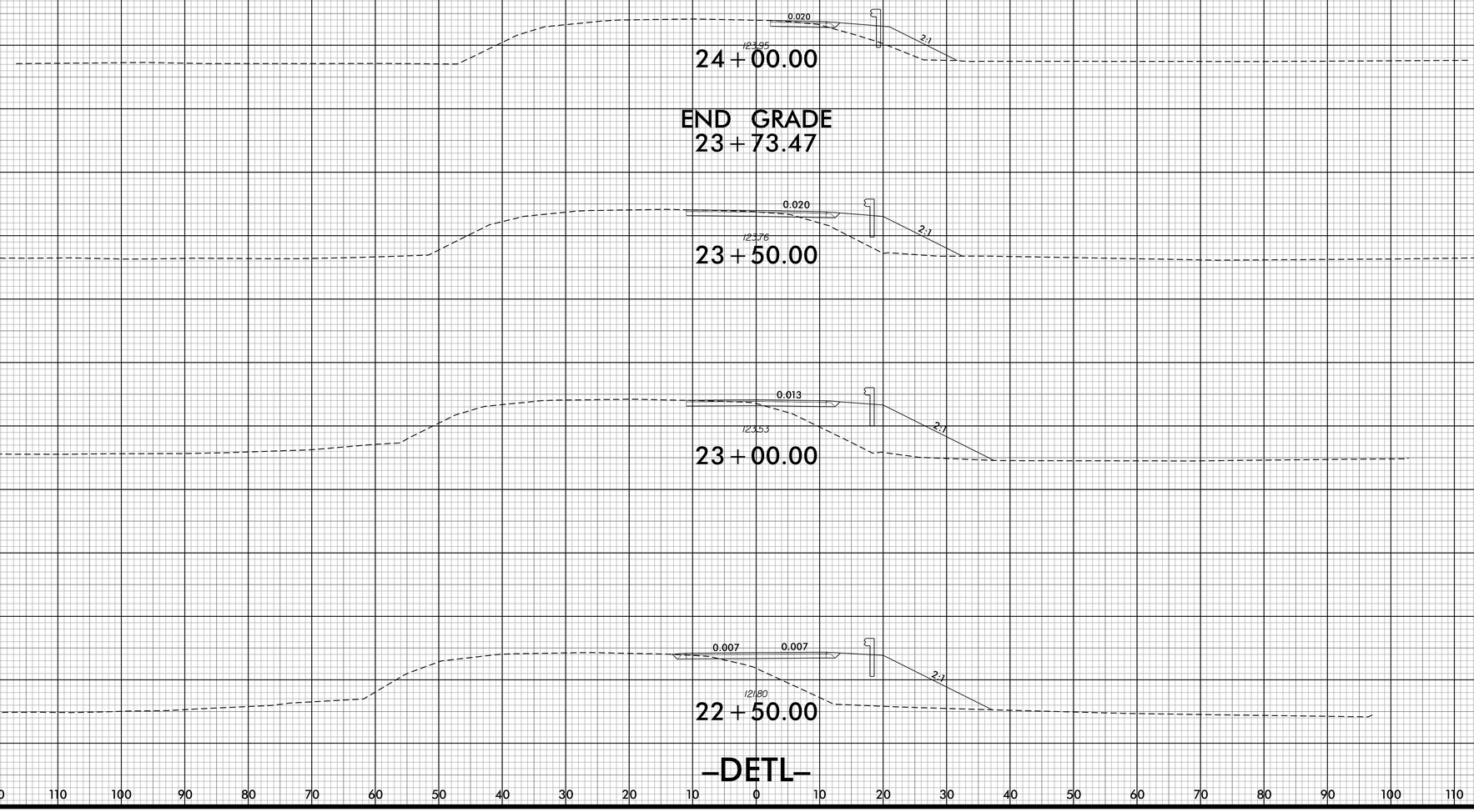

–DETL–

TIP PROJECT: B–4635

CONTRACT: DC00287

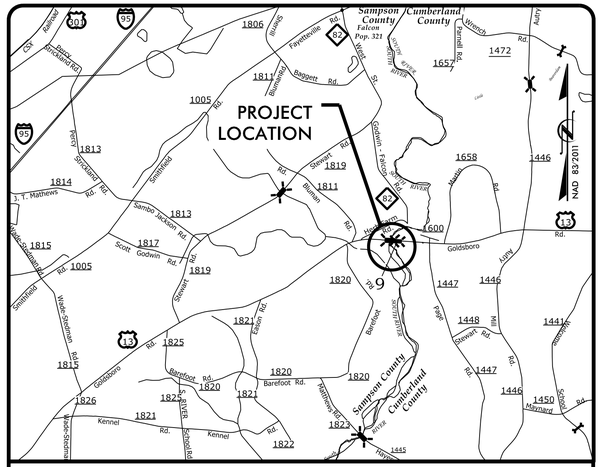

VICINITY MAP

STATE	STATE PROJECT REFERENCE NO.	SHEET NO.	TOTAL SHEETS
N.C.	B–4635		

STATE PROJ. NO.	F. A. PROJ. NO.	DESCRIPTION
38446.1.2	N/A	P.E.
38446.2.1	N/A	R/W
38446.3.1	N/A	CONST.

STATE OF NORTH CAROLINA

DIVISION OF HIGHWAYS

SAMPSON COUNTY

LOCATION: REPLACE BRIDGE #9 OVER SOUTH RIVER OVERFLOW ON US 13

TYPE OF WORK: GRADING, DRAINAGE, PAVING, AND STRUCTURE

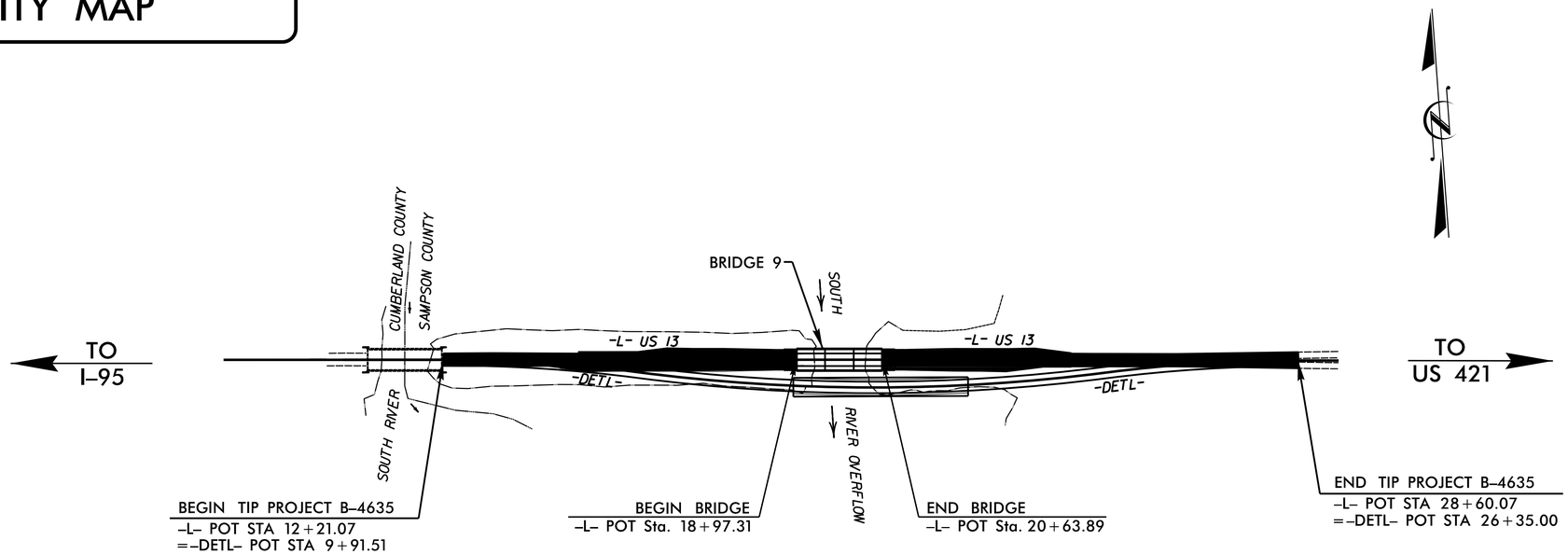

STRUCTURE

DESIGN DATA

ADT (2019) = 4,184
ADT (2039) = 6,104
K = 9 %
D = 60 %
T = 19 % **
* V = 60 MPH
** (TTST 14 %, DUAL 5 %)

FUNC CLASS = MINOR ARTERIAL

REGIONAL TIER

PROJECT LENGTH

LENGTH ROADWAY TIP PROJECT B–4635 = 0.278 MILES
LENGTH STRUCTURE TIP PROJECT B–4635 = 0.032 MILES

TOTAL LENGTH TIP PROJECT B–4635 = 0.310 MILES

Prepared In the Office of:

DIVISION OF HIGHWAYS

STRUCTURES MANAGEMENT UNIT

1000 BIRCH RIDGE DR.

RALEIGH, N.C. 27610

2018 STANDARD SPECIFICATIONS

LETTING DATE :

April 16, 2020

KRISTY L. W. ALFORD, P.E.
PROJECT ENGINEER

P. KOREY NEWTON, P.E.
PROJECT DESIGN ENGINEER

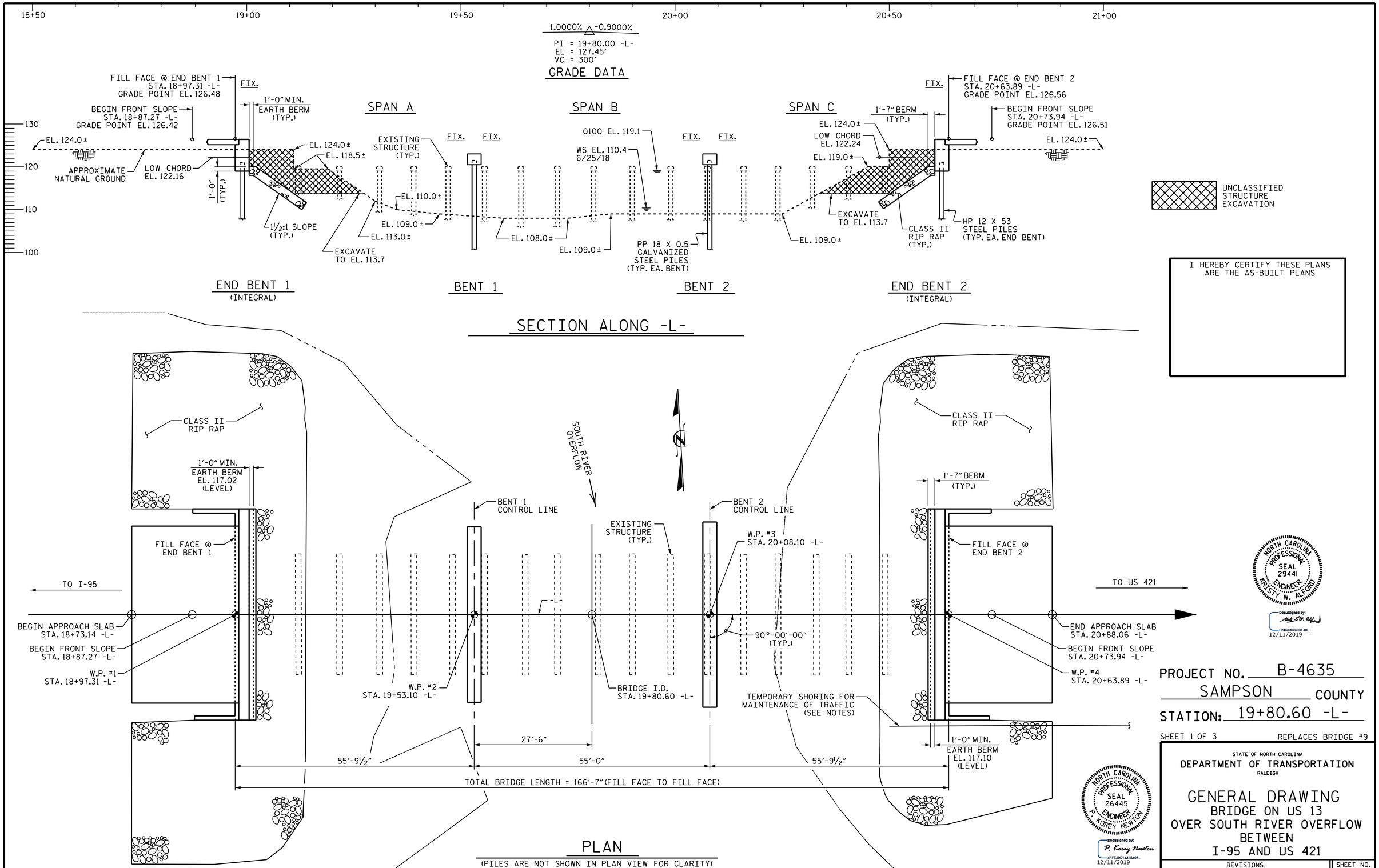

I HEREBY CERTIFY THESE PLANS ARE THE AS-BUILT PLANS

NORTH CAROLINA PROFESSIONAL SEAL 29441 ENGINEER KRISTY W. ALFORD

DocuSigned by: F24683B9B0BF40E...
12/11/2019

NORTH CAROLINA PROFESSIONAL SEAL 26445 ENGINEER P. KOREY NEWTON

DocuSigned by: P. Korey Newton 4FFE39D143184D7...
12/11/2019

PROJECT NO. B-4635

SAMPSON COUNTY

STATION: 19+80.60 -L-

SHEET 1 OF 3 REPLACES BRIDGE #9

STATE OF NORTH CAROLINA
DEPARTMENT OF TRANSPORTATION
RALEIGH

GENERAL DRAWING
BRIDGE ON US 13 OVER SOUTH RIVER OVERFLOW BETWEEN I-95 AND US 421

REVISIONS						SHEET NO.
NO.	BY:	DATE:	NO.	BY:	DATE:	S-1
1			3			TOTAL SHEETS
2			4			30

DOCUMENT NOT CONSIDERED FINAL UNLESS ALL SIGNATURES COMPLETED

DRAWN BY :	M.K. BEARD	DATE :	2/5/19
CHECKED BY :	W.C. SMITH	DATE :	7/18/19
DESIGN ENGINEER OF RECORD:	Z. MALIK	DATE :	10/19

11-DEC-2019 10:58
H:\Structures\Plans\B4635_SMU_GD_810009.dgn
pknewton

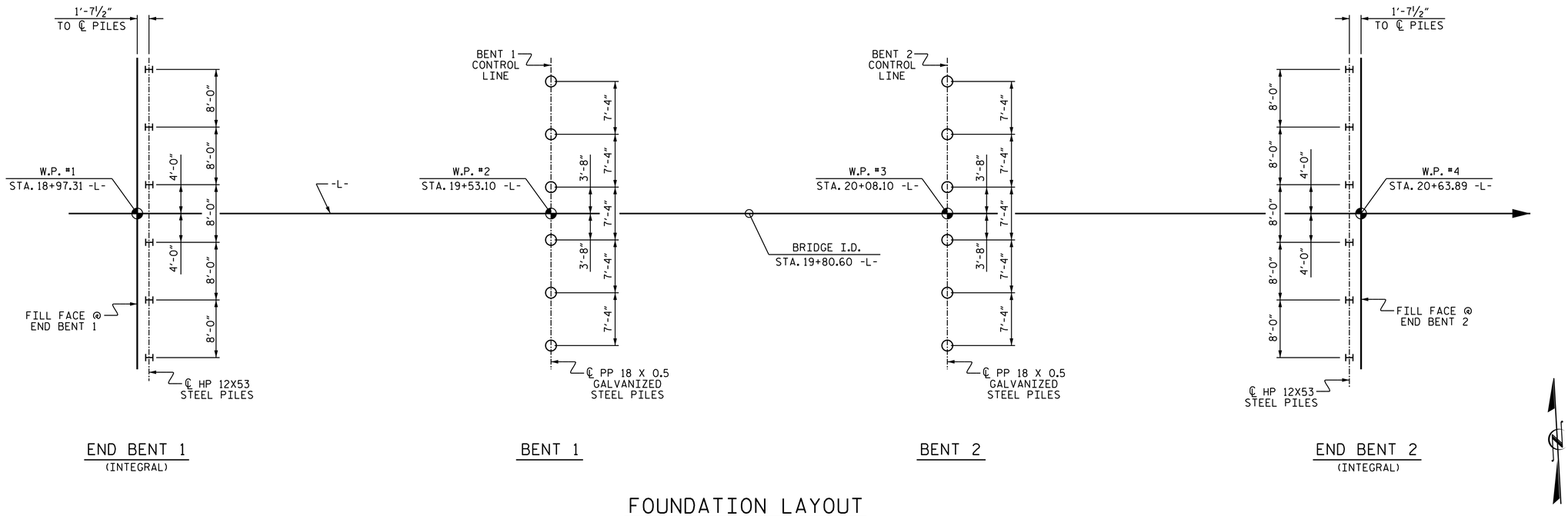

FOUNDATION LAYOUT

DIMENSIONS LOCATING PILES ARE SHOWN TO THE CENTERLINE OF PILES.
ALL PILES ARE VERTICAL.

NOTES

FOR PILES, SEE SECTION 450 OF THE STANDARD SPECIFICATIONS.

PILES AT END BENT 1 & END BENT 2 ARE DESIGNED FOR A FACTORED RESISTANCE OF 95 TONS PER PILE.

DRIVE PILES AT END BENT 1 & END BENT 2 TO A REQUIRED DRIVING RESISTANCE OF 160 TONS PER PILE.

PILES AT BENT 1 & BENT 2 ARE DESIGNED FOR A FACTORED RESISTANCE OF 145 TONS PER PILE.

DRIVE PILES AT BENT 1 & BENT 2 TO A REQUIRED DRIVING RESISTANCE OF 200 TONS PER PILE. THIS REQUIRED DRIVING RESISTANCE INCLUDES ADDITIONAL RESISTANCE FOR DOWNDRAG OR SCOUR.

INSTALL PILES AT BENT 1 & BENT 2 TO A TIP ELEVATION NO HIGHER THAN 83 FT.

THE SCOUR CRITICAL ELEVATION FOR BENT 1 & BENT 2 IS ELEVATION 95.0. SCOUR CRITICAL ELEVATIONS ARE USED TO MONITOR POSSIBLE SCOUR PROBLEMS DURING THE LIFE OF THE STRUCTURE.

IT HAS BEEN ESTIMATED THAT A HAMMER WITH AN EQUIVALENT RATED ENERGY IN THE RANGE OF 59,500 FT-LBS TO 84,000 FT-LBS PER BLOW WILL BE REQUIRED TO DRIVE PILES AT BENT 1 & BENT 2. THIS ESTIMATED ENERGY RANGE DOES NOT RELEASE THE CONTRACTOR FROM PROVIDING DRIVING EQUIPMENT IN ACCORDANCE WITH SUBARTICLE 450-3(D)(2) OF THE STANDARD SPECIFICATIONS.

TESTING THE FIRST PRODUCTION PILE WITH THE PDA DURING DRIVING, RESTRIKING OR REDRIVING IS REQUIRED AT BENT 1 & BENT 2. FOR PDA TESTING, SEE SECTION 450 OF THE STANDARD SPECIFICATIONS.

PIPE PILE PLATES ARE REQUIRED FOR THE FIRST PRODUCTION STEEL PIPE PILE TO BE TESTED WITH PDA AT EACH INTERIOR BENT. THE ENGINEER WILL DETERMINE THE NEED FOR PIPE PILE PLATES AFTER DRIVING TEST PILES OR A FEW INITIAL PRODUCTION PILES. FOR STEEL PIPE PILE PLATES, SEE SECTION 450 OF THE STANDARD SPECIFICATIONS.

PROJECT NO. B-4635
SAMPSON COUNTY
STATION: 19+80.60 -L-

SHEET 2 OF 3

NORTH CAROLINA PROFESSIONAL SEAL 26445 ENGINEER P. KOREY NEWTON

DocuSigned by: P. Korey Newton
4FFE3BD143184407...
12/11/2019

STATE OF NORTH CAROLINA
DEPARTMENT OF TRANSPORTATION
RALEIGH

GENERAL DRAWING
BRIDGE ON US 13
OVER SOUTH RIVER OVERFLOW
BETWEEN
I-95 AND US 421

REVISIONS						SHEET NO.
NO.	BY:	DATE:	NO.	BY:	DATE:	S-2
1			3			TOTAL SHEETS
2			4			30

DOCUMENT NOT CONSIDERED FINAL UNLESS ALL SIGNATURES COMPLETED

DRAWN BY :	M.K. BEARD	DATE :	2/6/19
CHECKED BY :	W.C. SMITH	DATE :	7/17/19
DESIGN ENGINEER OF RECORD:	Z. MALIK	DATE :	10/19

11-DEC-2019 10:58
H:\Structures\Plans\B4635_SMU_GD_810009.dgn
pknewton

TOTAL BILL OF MATERIAL

	CONSTRUCTION, MAINTENANCE & REMOVAL OF TEMPORARY STRUCTURE	REMOVAL OF EXISTING STRUCTURE	ASBESTOS ASSESSMENT	PDA TESTING	UNCLASSIFIED STRUCTURE EXCAVATION	REINFORCED CONCRETE DECK SLAB	GROOVING BRIDGE FLOORS	CLASS A CONCRETE	BRIDGE APPROACH SLABS	REINFORCING STEEL	36" PRESTRESSED CONCRETE GIRDERS		PILE DRIVING EQUIPMENT SETUP FOR HP 12X53 STEEL PILES	PILE DRIVING EQUIPMENT SETUP FOR PP 18X0.50 GALVANIZED STEEL PILES	HP 12X53 STEEL PILES		PP 18X0.50 GALVANIZED STEEL PILES		PIPE PILE PLATES	PILE REDRIVES	CONCRETE BARRIER RAIL	RIP RAP CLASS II (2'-0" THICK)	GEOTEXTILE FOR DRAINAGE	ELASTOMERIC BEARINGS	FIBER OPTIC CONDUIT SYSTEM
	LUMP SUM	LUMP SUM	LUMP SUM	EACH	LUMP SUM	SQ.FT.	SQ.FT.	CU. YDS.	LUMP SUM	LBS.	NO.	LIN. FT.	EACH	EACH	NO.	LIN. FT.	NO.	LIN. FT.	EACH	EACH	LIN. FT.	TONS	SQ. YDS.	LUMP SUM	LIN. FT.
SUPERSTRUCTURE						7133	7877.9				15	820									329.83				325.83
END BENT 1					LUMP SUM			32.3		4144			6		6	360				3		325	360		
BENT 1								14.8		2577				6			6	300	6	3					
BENT 2								14.8		2577				6			6	300	6	3					
END BENT 2					LUMP SUM			32.3		4144			6		6	360				3		320	355		
TOTAL	LUMP SUM	LUMP SUM	LUMP SUM	2	LUMP SUM	7133	7877.9	94.2	LUMP SUM	13,442	15	820	12	12	12	720	12	600	12	12	329.83	645	715	LUMP SUM	325.83

BM #1: RAILROAD SPIKE IN BASE OF 13" PINE, 121.21' RIGHT OF STA. 23+45.41 -L-, EL. 115.37

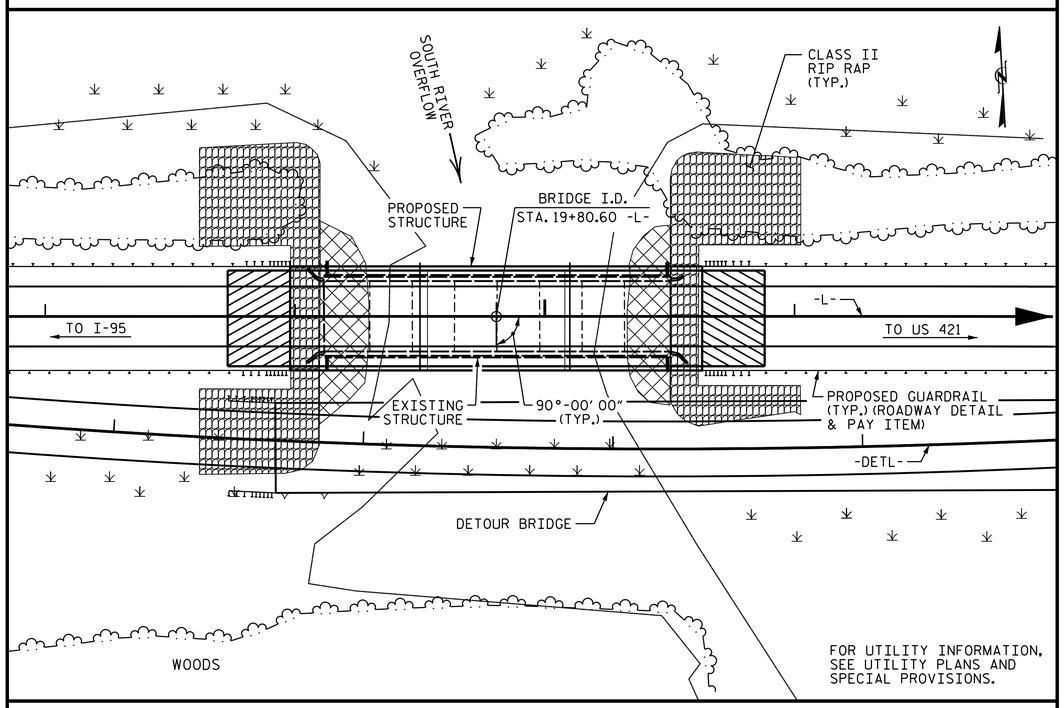

LOCATION SKETCH

HYDRAULIC DATA

DESIGN DISCHARGE	= 6560 CFS
FREQUENCY OF DESIGN DISCHARGE	= 50 YR.
DESIGN HIGH WATER ELEVATION	= 118.1
DRAINAGE AREA	= 163 SQ. MI.
BASE DISCHARGE (Q100)	= 7820 CFS
BASE HIGH WATER ELEVATION	= 119.1

OVERTOPPING FLOOD DATA

OVERTOPPING DISCHARGE	= 19260 CFS
FREQUENCY OF OVERTOPPING FLOOD	= 500+ YR.
OVERTOPPING FLOOD ELEVATION	= 124.5 *

* OVERTOPPING IS APPROXIMATELY STATION 23+65.00 -L-

NOTES

ASSUMED LIVE LOAD = HL-93 OR ALTERNATE LOADING.

THIS BRIDGE HAS BEEN DESIGNED IN ACCORDANCE WITH THE AASHTO LRFD BRIDGE DESIGN SPECIFICATIONS.

THIS BRIDGE IS LOCATED IN SEISMIC ZONE 1.

FOR OTHER DESIGN DATA AND GENERAL NOTES, SEE SHEET SN.

FOR EROSION CONTROL MEASURES SEE EROSION CONTROL PLANS.

THIS STRUCTURE HAS BEEN DESIGNED IN ACCORDANCE WITH "HEC 18 - EVALUATING SCOUR AT BRIDGES".

THE EXISTING STRUCTURE CONSISTING OF 9 SPANS: 1 @ 17'-6", 6 @ 17'-0" AND 2 @ 17'-6", WITH A CLEAR ROADWAY WIDTH OF 28'-0" AND REINFORCED CONCRETE FLOOR ON TIMBER JOISTS WITH 5" AWS; ON END BENTS CONSISTING OF REINFORCED CONCRETE CAPS ON TIMBER JOISTS AND BENTS CONSISTING OF REINFORCED CONCRETE CAPS ON TIMBER PILES AND STEEL CRUTCH BENTS SHALL BE REMOVED.

THE SUBSTRUCTURE OF THE EXISTING BRIDGE INDICATED ON THE PLANS IS FROM THE BEST INFORMATION AVAILABLE. SINCE THIS INFORMATION IS SHOWN FOR THE CONVENIENCE OF THE CONTRACTOR, THE CONTRACTOR SHALL HAVE NO CLAIM WHATSOEVER AGAINST THE DEPARTMENT OF TRANSPORTATION FOR ANY DELAYS OR ADDITIONAL COST INCURRED BASED ON DIFFERENCES BETWEEN THE EXISTING BRIDGE SUBSTRUCTURE SHOWN ON THE PLANS AND THE ACTUAL CONDITIONS AT THE PROJECT SITE.

FOR CRANE SAFETY, SEE SPECIAL PROVISIONS.

FOR BENTS 1 & 2, ONLY PARTIAL GALVANIZING OF THE PILES IS REQUIRED. SEE BENT SHEETS FOR REQUIRED GALVANIZED LENGTHS. PAYMENT FOR PARTIALLY GALVANIZED PILES WILL BE MADE UNDER THE CONTRACT UNIT PRICE FOR GALVANIZED STEEL PILES.

PRESTRESSED CONCRETE DECK PANELS MAY BE USED IN LIEU OF METAL STAY-IN-PLACE FORMS IN ACCORDANCE WITH ARTICLE 420-3 OF THE STANDARD SPECIFICATIONS.

REMOVABLE FORMS MAY BE USED IN LIEU OF METAL STAY-IN-PLACE FORMS IN ACCORDANCE WITH ARTICLE 420-3 OF THE STANDARD SPECIFICATIONS.

FOR FIBER OPTIC CONDUIT SYSTEM, SEE SPECIAL PROVISIONS.

THE CONTRACTOR WILL BE REQUIRED TO CONSTRUCT, MAINTAIN AND AFTERWARDS REMOVE A TEMPORARY STRUCTURE AT STA. 18+32.40 -DETL- FOR USE DURING CONSTRUCTION OF THE PROPOSED STRUCTURE. FOR CONSTRUCTION, MAINTENANCE AND REMOVAL OF TEMPORARY STRUCTURE, SEE SPECIAL PROVISIONS.

THE BRIDGE RAILS ON THE TEMPORARY STRUCTURE SHALL BE DESIGNED FOR THE AASHTO LRFD TEST LEVEL 3 (TL-3) CRASH TEST CRITERIA. FOR CONSTRUCTION, MAINTENANCE AND REMOVAL OF TEMPORARY STRUCTURE, SEE SPECIAL PROVISIONS.

NEEDLE BEAMS WILL NOT BE ALLOWED UNLESS OTHERWISE CALLED FOR ON THE PLANS OR APPROVED BY THE ENGINEER.

FOR FALSEWORK AND FORMWORK, SEE SPECIAL PROVISIONS.

FOR GROUT FOR STRUCTURES, SEE SPECIAL PROVISIONS.

FOR SUBMITTAL OF WORKING DRAWINGS, SEE SPECIAL PROVISIONS.

FOR ASBESTOS ASSESSMENT FOR BRIDGE DEMOLITION AND RENOVATION ACTIVITIES, SEE SPECIAL PROVISIONS.

REMOVAL OF THE EXISTING BRIDGE SHALL BE PERFORMED IN A MANNER THAT PREVENTS DEBRIS FROM FALLING INTO THE WATER. THE CONTRACTOR SHALL SUBMIT DEMOLITION PLANS FOR REVIEW AND REMOVE THE BRIDGE IN ACCORDANCE WITH ARTICLE 402-2 OF THE STANDARD SPECIFICATIONS.

THE MATERIAL SHOWN IN THE CROSS-HATCHED AREA SHALL BE EXCAVATED FOR A DISTANCE OF 62 FT. EACH SIDE OF CENTERLINE ROADWAY AT END BENT 1 AND END BENT 2 AS DIRECTED BY THE ENGINEER. THIS WORK WILL BE PAID FOR AT THE CONTRACT LUMP SUM PRICE FOR UNCLASSIFIED STRUCTURE EXCAVATION. SEE SECTION 412 OF THE STANDARD SPECIFICATIONS.

FOR LIMITS OF TEMPORARY SHORING FOR MAINTENANCE OF TRAFFIC, SEE TRAFFIC CONTROL PLANS. FOR PAY ITEM FOR TEMPORARY SHORING FOR MAINTENANCE OF TRAFFIC, SEE ROADWAY PLANS.

PROJECT NO. B-4635

SAMPSON COUNTY

STATION: 19+80.60 -L-

SHEET 3 OF 3

STATE OF NORTH CAROLINA
DEPARTMENT OF TRANSPORTATION
RALEIGH

GENERAL DRAWING
BRIDGE ON US 13
OVER SOUTH RIVER OVERFLOW
BETWEEN
I-95 AND US421

NORTH CAROLINA PROFESSIONAL SEAL 26445 ENGINEER P. KOREY NEWTON

Docusigned by: P. Korey Newton
12/11/2019

DOCUMENT NOT CONSIDERED FINAL UNLESS ALL SIGNATURES COMPLETED

REVISIONS						SHEET NO.
NO.	BY:	DATE:	NO.	BY:	DATE:	S-3
1			3			TOTAL SHEETS
2			4			30

DRAWN BY : M.K. BEARD DATE : 2/5/19
CHECKED BY : W.C. SMITH DATE : 7/17/19
DESIGN ENGINEER OF RECORD: Z. MALIK DATE : 10/19

11-DEC-2019 10:58
H:\Structures\Plans\B4635_SMU_GD_810009.dgn
pknewton

LOAD AND RESISTANCE FACTOR RATING (LRFR) SUMMARY FOR PRESTRESSED CONCRETE GIRDERS

LEVEL		VEHICLE	WEIGHT (W) (TONS)	CONTROLLING LOAD RATING (#)	MINIMUM RATING FACTORS (RF)	TONS = W x RF	STRENGTH I LIMIT STATE											SERVICE III LIMIT STATE						COMMENT NUMBER
								MOMENT					SHEAR						MOMENT						
							LIVE-LOAD FACTORS $\gamma_{(LL)}$	DISTRIBUTION FACTORS (DF)	RATING FACTOR	SPAN	GIRDER LOCATION	DISTANCE FROM LEFT END OF SPAN (ft)	DISTRIBUTION FACTORS (DF)	RATING FACTOR	SPAN	GIRDER LOCATION	DISTANCE FROM LEFT END OF SPAN (ft)	LIVE-LOAD FACTORS $\gamma_{(LL)}$	DISTRIBUTION FACTORS (DF)	RATING FACTOR	SPAN	GIRDER LOCATION	DISTANCE FROM LEFT END OF SPAN (ft)	
DESIGN LOAD RATING		HL-93 (INVENTORY)	N/A	1	1.050	0.000	1.75	0.752	1.25	A	I	26.670	0.901	1.07	A	I	5.330	0.80	0.752	1.05	A	I	26.670	
		HL-93 (OPERATING)	N/A		1.050	0.000	1.35	0.752	1.62	A	I	26.670	0.901	1.39	A	I	5.330	N/A	0.752	1.05	A	I	26.670	
		HS-20 (INVENTORY)	36.000	2	1.273	45.815	1.75	0.752	1.56	A	I	32.000	0.901	1.27	A	I	16.000	0.80	0.752	1.32	A	I	26.670	
		HS-20 (OPERATING)	36.000		1.315	47.330	1.35	0.752	2.02	A	I	32.000	0.901	1.65	A	I	16.000	N/A	0.752	1.32	A	I	26.670	
LEGAL LOAD RATING	SINGLE VEHICLE (SV)	SNSH	13.500		2.751	37.136	1.40	0.752	4.08	A	I	26.670	0.901	3.42	A	I	16.000	0.80	0.752	2.75	A	I	26.670	
		SNGARBS2	20.000		2.140	42.793	1.40	0.752	3.13	A	I	32.000	0.901	2.54	A	I	16.000	0.80	0.752	2.14	A	I	26.670	
		SNAGRIS2	22.000		2.066	45.458	1.40	0.752	2.99	A	I	32.000	0.901	2.40	A	I	16.000	0.80	0.752	2.07	A	I	26.670	
		SNCOTTS3	27.250		1.371	37.370	1.40	0.752	2.04	A	I	26.670	0.901	1.72	A	I	16.000	0.80	0.752	1.37	A	I	26.670	
		SNAGGRS4	34.925		1.180	41.212	1.40	0.752	1.75	A	I	26.670	0.901	1.50	A	I	16.000	0.80	0.752	1.18	A	I	26.670	
		SNS5A	35.550		1.152	40.938	1.40	0.752	1.71	A	I	26.670	0.901	1.57	A	I	16.000	0.80	0.752	1.15	A	I	26.670	
		SNS6A	39.950		1.071	42.800	1.40	0.752	1.59	A	I	26.670	0.901	1.47	A	I	16.000	0.80	0.752	1.07	A	I	26.670	
		SNS7B	42.000		1.021	42.874	1.40	0.752	1.52	A	I	26.670	0.901	1.47	A	I	5.330	0.80	0.752	1.02	A	I	26.670	
	TRUCK TRACTOR SEMI-TRAILER (TTST)	TNAGRIT3	33.000		1.311	43.259	1.40	0.752	1.95	A	I	26.670	0.901	1.72	A	I	16.000	0.80	0.752	1.31	A	I	26.670	
		TNT4A	33.075		1.321	43.685	1.40	0.752	1.96	A	I	26.670	0.901	1.63	A	I	16.000	0.80	0.752	1.32	A	I	26.670	
		TNT6A	41.600		1.095	45.536	1.40	0.752	1.63	A	I	26.670	0.901	1.60	A	I	5.330	0.80	0.752	1.10	A	I	26.670	
		TNT7A	42.000		1.108	46.540	1.40	0.752	1.65	A	I	26.670	0.901	1.50	A	I	5.330	0.80	0.752	1.11	A	I	26.670	
		TNT7B	42.000		1.156	48.567	1.40	0.752	1.70	A	I	32.000	0.901	1.42	A	I	5.330	0.80	0.752	1.16	A	I	26.670	
		TNAGRIT4	43.000		1.095	47.073	1.40	0.752	1.62	A	I	32.000	0.901	1.36	A	I	16.000	0.80	0.752	1.10	A	I	26.670	
		TNAGT5A	45.000		1.025	46.136	1.40	0.752	1.52	A	I	26.670	0.901	1.38	A	I	5.330	0.80	0.752	1.03	A	I	26.670	
		TNAGT5B	45.000	3	1.007	45.305	1.40	0.752	1.49	A	I	26.670	0.901	1.29	A	I	16.000	0.80	0.752	1.01	A	I	26.670	

LOAD FACTORS:

DESIGN LOAD RATING FACTORS	LIMIT STATE	γ_{DC}	γ_{DW}
	STRENGTH I	1.25	1.50
	SERVICE III	1.00	1.00

NOTES:

MINIMUM RATING FACTORS ARE BASED ON THE STRENGTH I AND SERVICE III LIMIT STATES.

ALLOWABLE STRESSES FOR SERVICE III LIMIT STATE ARE AS REQUIRED FOR DESIGN.

COMMENTS:

1.
2.
3.
4.

(#) CONTROLLING LOAD RATING

(1) DESIGN LOAD RATING (HL-93)

(2) DESIGN LOAD RATING (HS-20)

(3) LEGAL LOAD RATING **

** SEE CHART FOR VEHICLE TYPE

GIRDER LOCATION

I - INTERIOR GIRDER
EL - EXTERIOR LEFT GIRDER
ER - EXTERIOR RIGHT GIRDER

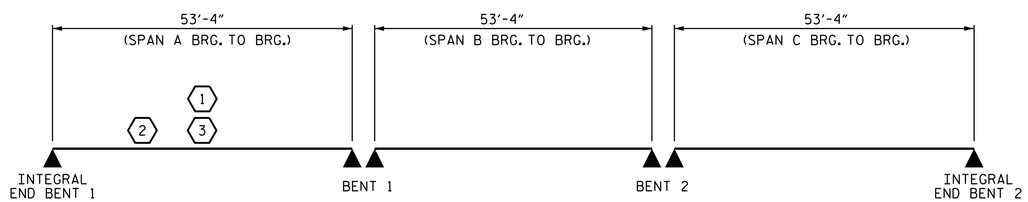

LRFR SUMMARY

PROJECT NO. B-4635

SAMPSON COUNTY

STATION: 19+80.60 -L-

NORTH CAROLINA PROFESSIONAL SEAL 26445 P.E. ENGINEER K. KORREY NEWTON

DocuSigned by: P. Korrey Newton 4FFB39CF42184C7...
2/11/2020

DOCUMENT NOT CONSIDERED FINAL UNLESS ALL SIGNATURES COMPLETED

STATE OF NORTH CAROLINA
DEPARTMENT OF TRANSPORTATION
RALEIGH

STANDARD

LRFR SUMMARY FOR PRESTRESSED CONCRETE GIRDERS
(NON-INTERSTATE TRAFFIC)

REVISIONS						SHEET NO.
NO.	BY:	DATE:	NO.	BY:	DATE:	S-4
1			3			TOTAL SHEETS
2			4			30

STD. NO. LRFR1

DESIGN ENGINEER OF RECORD: Z. MALIK	DATE : 10/19
ASSEMBLED BY : Z. MALIK	DATE : 10/4/18
CHECKED BY : W.C. SMITH	DATE : 7/17/19
DRAWN BY : MAA 1/08	REV. 11/12/08RR MAA/GM
CHECKED BY : GM/DI 2/08	REV. 10/1/11 MAA/GM
	REV. 12/17 MAA/THC

11-FEB-2020 16:04
H:\Structures\Plans\B4635_SMU_ LRFR_810009.dgn
pknewton

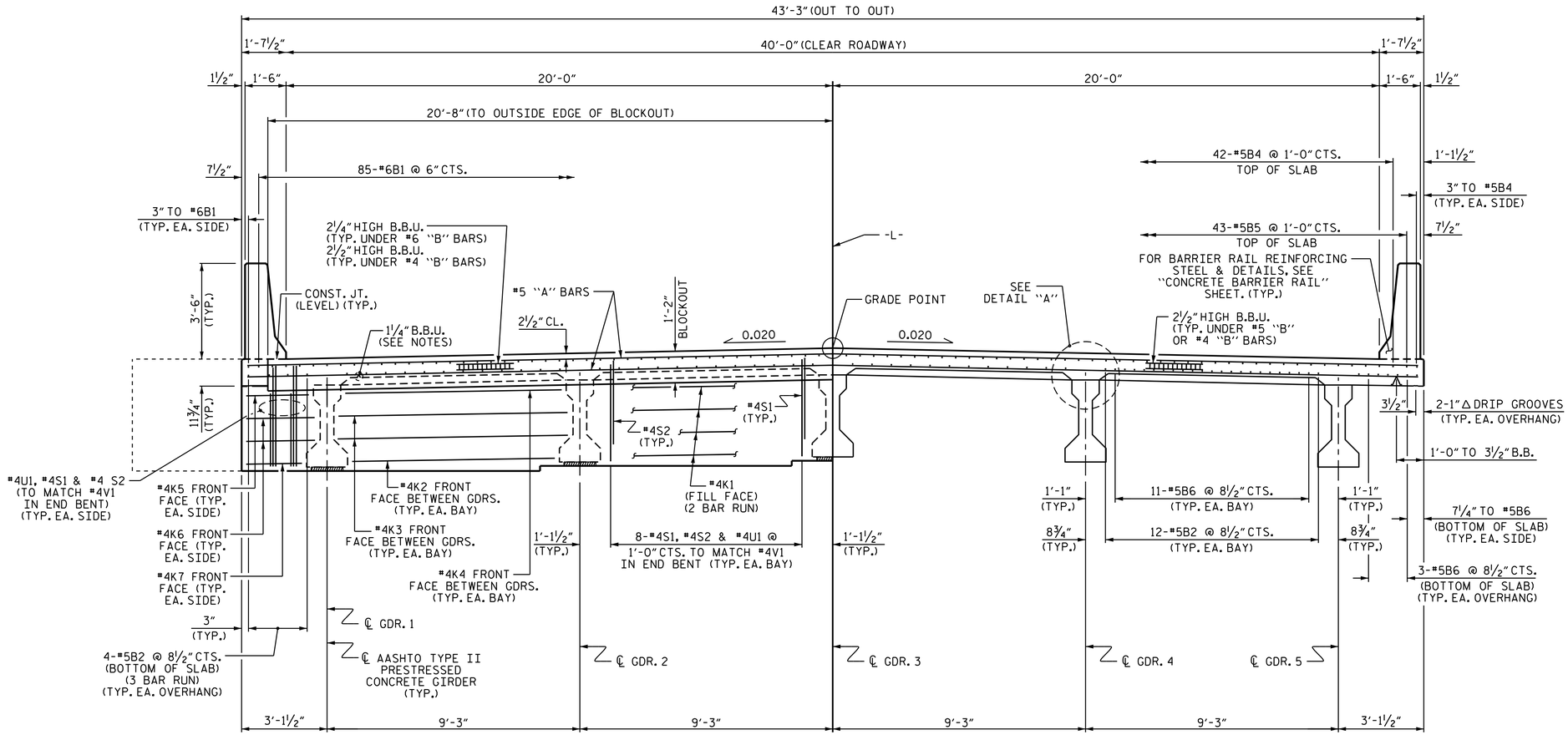

HALF SECTION - INTEGRAL END BENT DIAPHRAGM

HALF SECTION - LINK SLAB @ BENT

TYPICAL SECTION

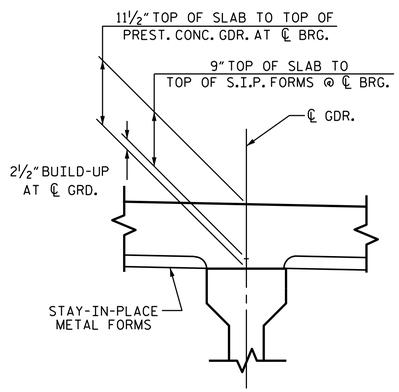

DETAIL "A"

NOTES

PROVIDE 1¼" HIGH BEAM BOLSTERS UPPER AT 4'-0" CTS. ATOP THE METAL STAY-IN-PLACE FORMS TO SUPPORT THE BOTTOM MAT OF "A" BARS. WHEN USING REMOVABLE FORMS, PROVIDE CONTINUOUS HIGH CHAIRS FOR METAL DECK (C.H.C.M.) @ 4'-0" CTS. WITH A HEIGHT TO SUPPORT THE BOTTOM MAT OF "A" BARS A CLEAR DISTANCE OF 2½" ABOVE THE TOP OF THE REMOVABLE FORM.

LONGITUDINAL STEEL MAY BE SHIFTED SLIGHTLY, AS NECESSARY, TO AVOID INTERFERENCE WITH STIRRUPS IN PRESTRESSED CONCRETE GIRDERS.

PREVIOUSLY CAST CONCRETE IN A CONTINUOUS UNIT SHALL HAVE ATTAINED A MINIMUM COMPRESSIVE STRENGTH OF 3,000 PSI BEFORE ADDITIONAL CONCRETE IS CAST IN THE UNIT.

BARRIER RAIL IN A CONTINUOUS UNIT SHALL NOT BE CAST UNTIL ALL SLAB CONCRETE IN THE UNIT HAS BEEN CAST AND HAS REACHED A MINIMUM COMPRESSIVE STRENGTH OF 3,000 PSI.

METAL STAY-IN-PLACE FORMS SHALL NOT BE WELDED TO THE SUPPORT ANGLES WITHIN THE LINK SLAB AREAS. SEE "PLAN OF SPANS" SHEETS FOR LOCATION.

NORTH CAROLINA PROFESSIONAL SEAL 26445 ENGINEER P. KOREY NEWTON

DocuSigned by: P. Korey Newton 4FFE35D1431B437...

1/8/2020

DOCUMENT NOT CONSIDERED FINAL UNLESS ALL SIGNATURES COMPLETED

PROJECT NO. B-4635

SAMPSON COUNTY

STATION: 19+80.60 -L-

SHEET 1 OF 2

STATE OF NORTH CAROLINA
DEPARTMENT OF TRANSPORTATION
RALEIGH

SUPERSTRUCTURE

TYPICAL SECTION

REVISIONS						SHEET NO.
NO.	BY:	DATE:	NO.	BY:	DATE:	S-5
1			3			TOTAL SHEETS
2			4			30

DRAWN BY : M.K. BEARD DATE : 06/19
CHECKED BY : W.C. SMITH DATE : 08/19
DESIGN ENGINEER OF RECORD: Z. MALIK DATE : 10/19

08-JAN-2020 12:57
H:\Structures\Plans\B4635_SMU_TS_810009.dgn
pknewton

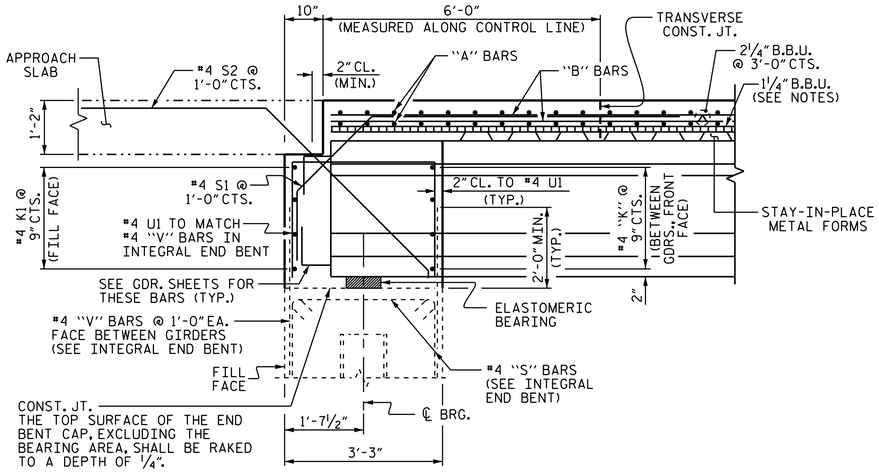

SECTION @ INTEGRAL END BENT

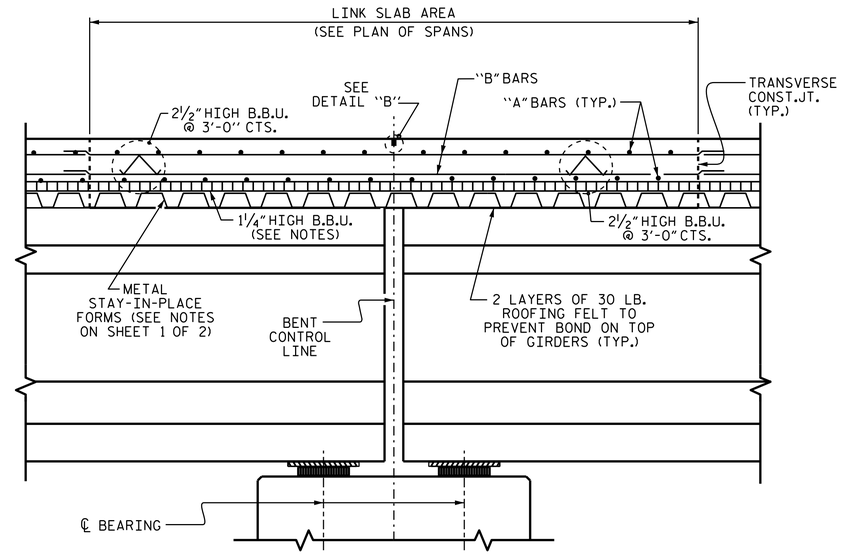

SECTION @ LINK SLAB

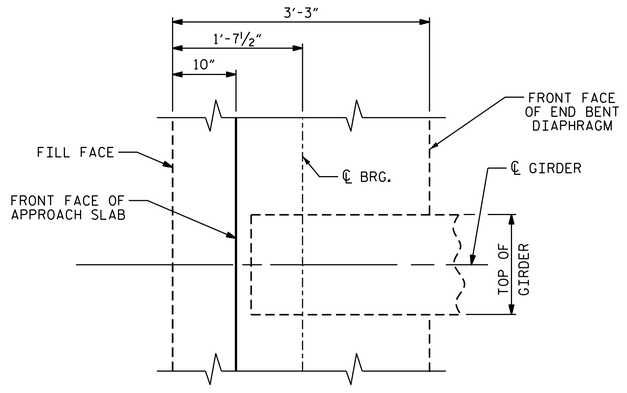

PLAN @ INTEGRAL END BENT

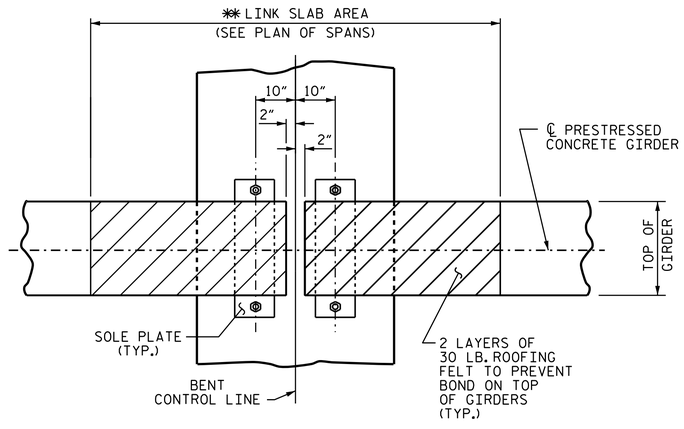

PLAN @ BENT

✱✱ THE TOP OF THE GIRDER IN THE AREA OF THE LINK SLAB SHALL BE SMOOTH AND FREE OF STIRRUPS OR ANCHOR STUDS.

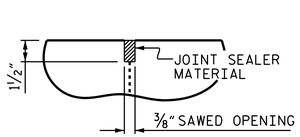

DETAIL "B"

A 1½" DEEP CONTRACTION JOINT AT BENT CONTROL LINE SHALL BE SAWN WITHIN 24 HOURS OF POURING THE DECK. THE JOINT SHALL BE FILLED WITH JOINT SEALER MATERIAL. THE JOINT SEALER MATERIAL SHALL CONFORM TO THE REQUIREMENTS OF TYPE B LOW MODULUS SILICONE SEALANT. SEE SECTION 1028 OF THE STANDARD SPECIFICATIONS.

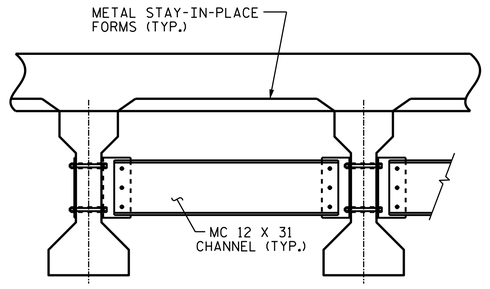

TYPICAL INTERMEDIATE DIAPHRAGM

SEE "INTERMEDIATE STEEL DIAPHRAGMS FOR TYPE II PRESTRESSED CONCRETE GIRDERS" SHEET FOR DETAILS.

PROJECT NO. B-4635

SAMPSON COUNTY

STATION: 19+80.60 -L-

SHEET 2 OF 2

STATE OF NORTH CAROLINA
DEPARTMENT OF TRANSPORTATION
RALEIGH

SUPERSTRUCTURE

TYPICAL SECTION

NORTH CAROLINA PROFESSIONAL SEAL 26445 ENGINEER P. KOREY NEWTON

DocuSigned by: P. Korey Newton 4FF829C1431B4C7... 2/11/2020

DRAWN BY : M.K. BEARD DATE : 06/19
CHECKED BY : W.C. SMITH DATE : 08/19
DESIGN ENGINEER OF RECORD: Z. MALIK DATE : 10/19

DOCUMENT NOT CONSIDERED FINAL UNLESS ALL SIGNATURES COMPLETED

REVISIONS					
NO.	BY:	DATE:	NO.	BY:	DATE:
1			3		
2			4		

SHEET NO. S-6

TOTAL SHEETS 30

11-FEB-2020 16:04
H:\Structures\Plans\B4635_SMU_TS_810009.dgn
pknewton

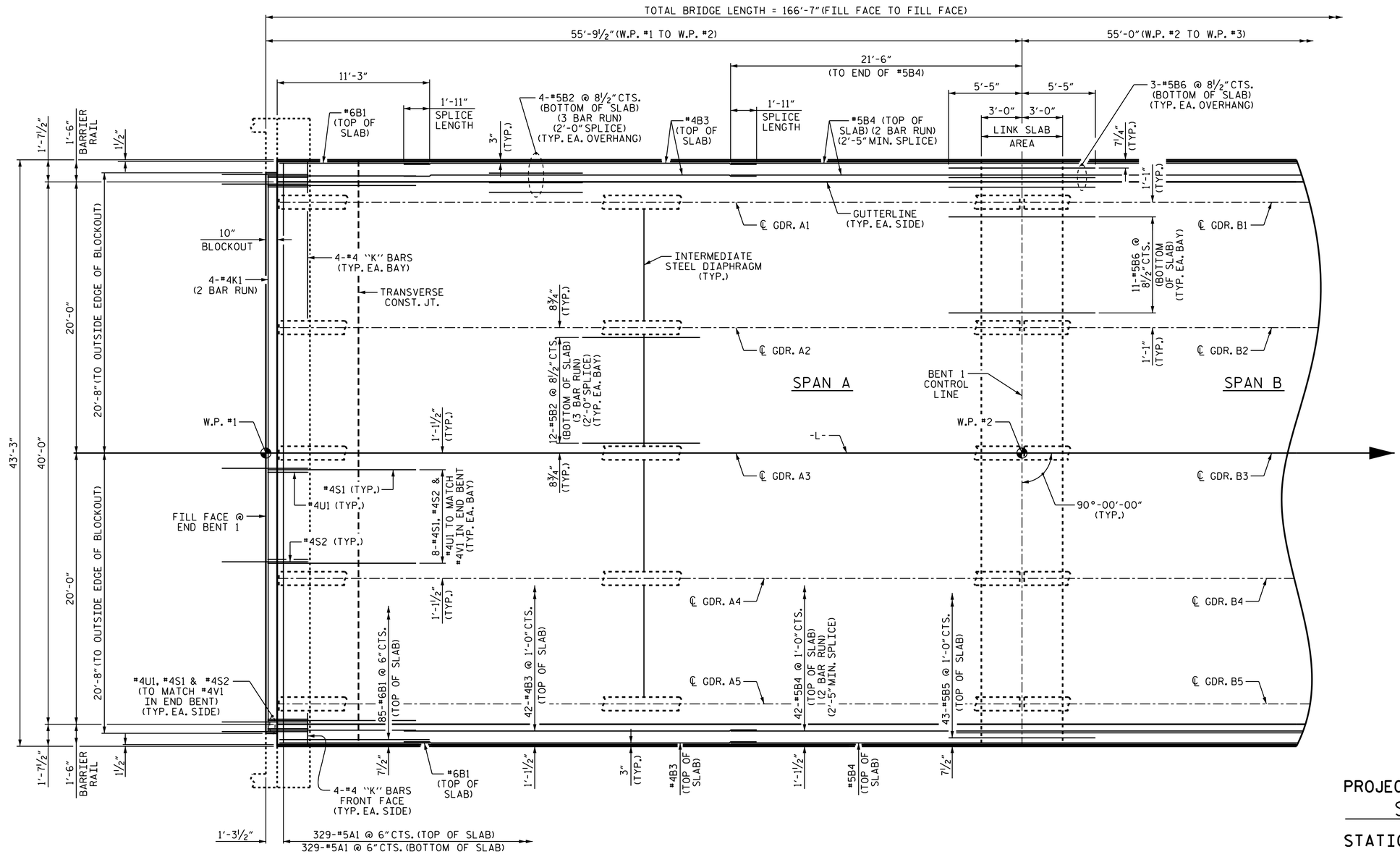

PLAN OF SPAN A

FOR INTERMEDIATE STEEL DIAPHRAGM DETAILS, SEE "INTERMEDIATE STEEL DIAPHRAGM" SHEET.

PROJECT NO. B-4635

SAMPSON COUNTY

STATION: 19+80.60 -L-

SHEET 1 OF 3

STATE OF NORTH CAROLINA
DEPARTMENT OF TRANSPORTATION
RALEIGH

SUPERSTRUCTURE

PLAN OF SPANS

NORTH CAROLINA PROFESSIONAL SEAL 26445 ENGINEER P. KOREY NEWTON

DocuSigned by: P. Korey Newton 4FFE39D1431B427...
1/8/2020

DRAWN BY : M.K. BEARD DATE : 06/19
CHECKED BY : W.C. SMITH DATE : 08/19
DESIGN ENGINEER OF RECORD: Z. MALIK DATE : 10/19

08-JAN-2020 12:57
H:\Structures\Plans\B4635_SMU_ S*_810009.dgn
pknewton

DOCUMENT NOT CONSIDERED FINAL UNLESS ALL SIGNATURES COMPLETED

REVISIONS						SHEET NO.
NO.	BY:	DATE:	NO.	BY:	DATE:	S-7
1			3			TOTAL SHEETS
2			4			30

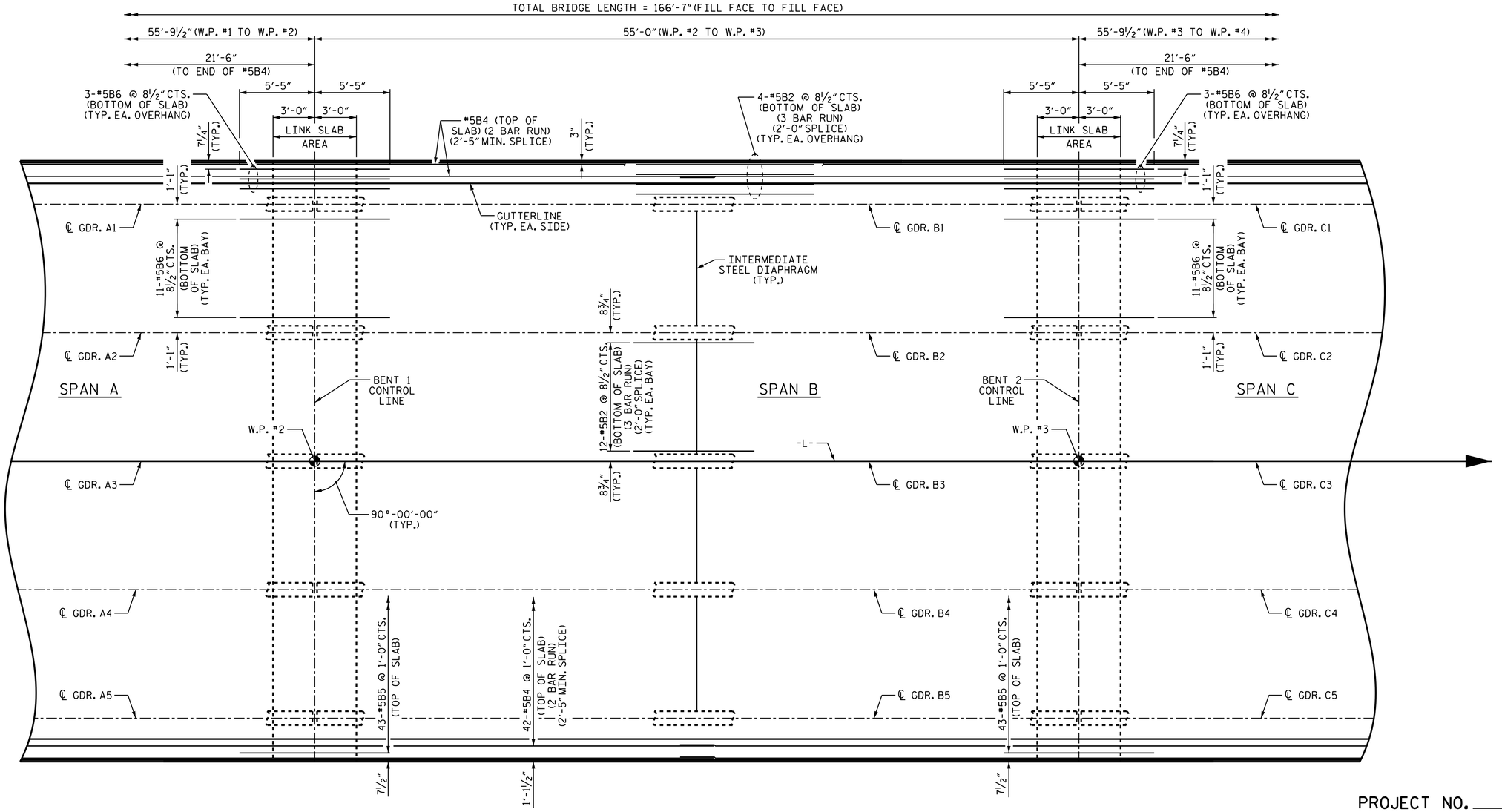

PLAN OF SPAN B

FOR INTERMEDIATE STEEL DIAPHRAGM DETAILS, SEE "INTERMEDIATE STEEL DIAPHRAGM" SHEET.

PROJECT NO. B-4635

SAMPSON COUNTY

STATION: 19+80.60 -L-

SHEET 2 OF 3

STATE OF NORTH CAROLINA
DEPARTMENT OF TRANSPORTATION
RALEIGH

SUPERSTRUCTURE

PLAN OF SPANS

NORTH CAROLINA PROFESSIONAL SEAL 26445 ENGINEER P. KOREY NEWTON

DocuSigned by: P. Korey Newton 4FFE39D1431B427...
1/8/2020

DOCUMENT NOT CONSIDERED FINAL UNLESS ALL SIGNATURES COMPLETED

REVISIONS					
NO.	BY:	DATE:	NO.	BY:	DATE:
1			3		
2			4		

SHEET NO. S-8

TOTAL SHEETS 30

DRAWN BY : M.K. BEARD DATE : 06/19
CHECKED BY : W.C. SMITH DATE : 08/19
DESIGN ENGINEER OF RECORD: Z. MALIK DATE : 10/19

08-JAN-2020 12:57
H:\Structures\Plans\B4635_SMU_ S*_810009.dgn
pknewton

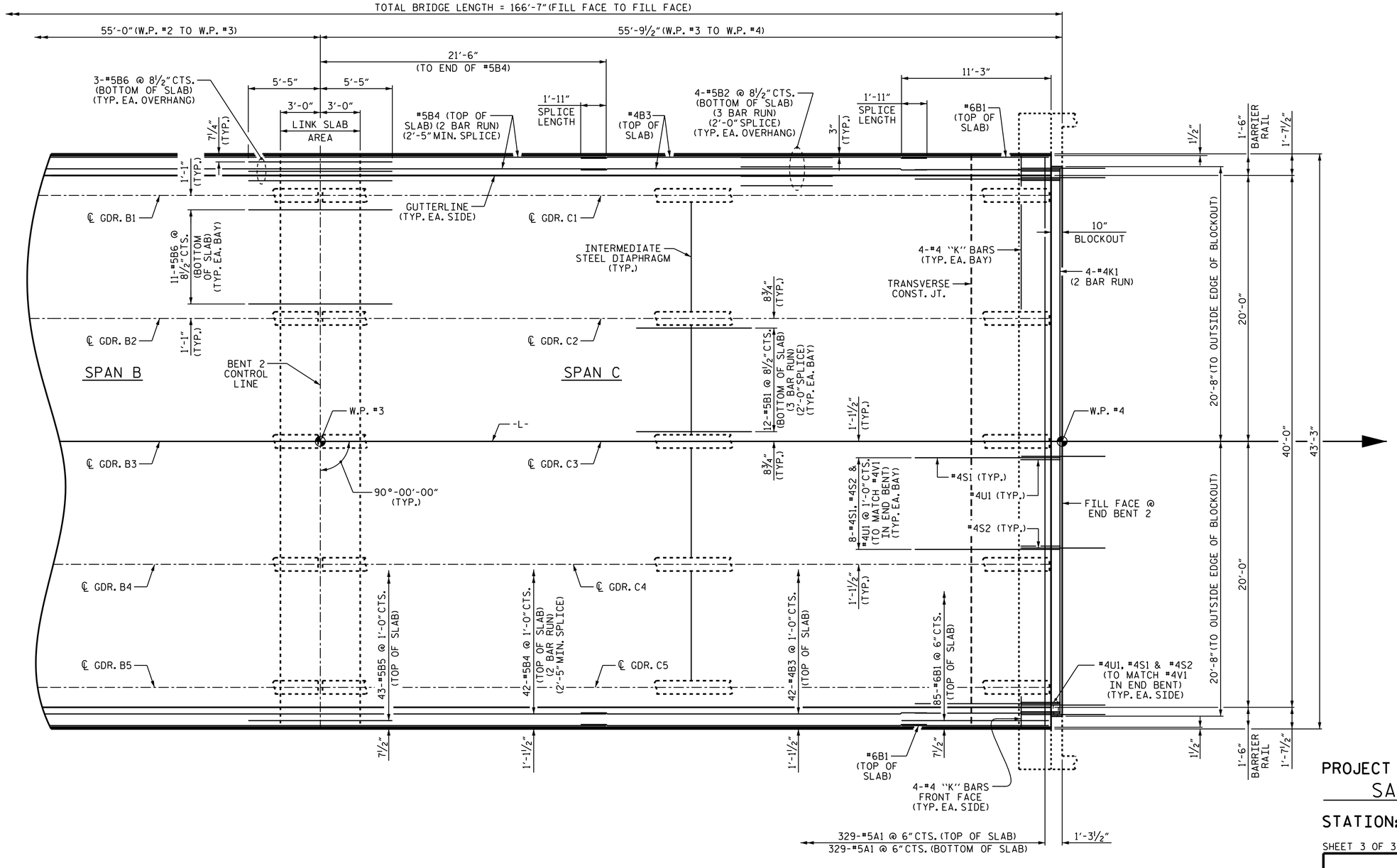

PLAN OF SPAN C

FOR INTERMEDIATE STEEL DIAPHRAGM DETAILS, SEE "INTERMEDIATE STEEL DIAPHRAGM" SHEET.

PROJECT NO. B-4635

SAMPSON COUNTY

STATION: 19+80.60 -L-

SHEET 3 OF 3

STATE OF NORTH CAROLINA
DEPARTMENT OF TRANSPORTATION
RALEIGH

SUPERSTRUCTURE

PLAN OF SPANS

NORTH CAROLINA PROFESSIONAL SEAL 26445 ENGINEER P. KOREY NEWTON

DocuSigned by: P. Korey Newton 4FFE39D1431B427...
1/8/2020

DRAWN BY : M.K. BEARD DATE : 06/19
CHECKED BY : W.C. SMITH DATE : 08/19
DESIGN ENGINEER OF RECORD: Z. MALIK DATE : 10/19

08-JAN-2020 12:57
H:\Structures\Plans\B4635_SMU_ S*_810009.dgn
pknewton

DOCUMENT NOT CONSIDERED FINAL UNLESS ALL SIGNATURES COMPLETED

REVISIONS						SHEET NO.
NO.	BY:	DATE:	NO.	BY:	DATE:	S-9
1			3			TOTAL SHEETS
2			4			30

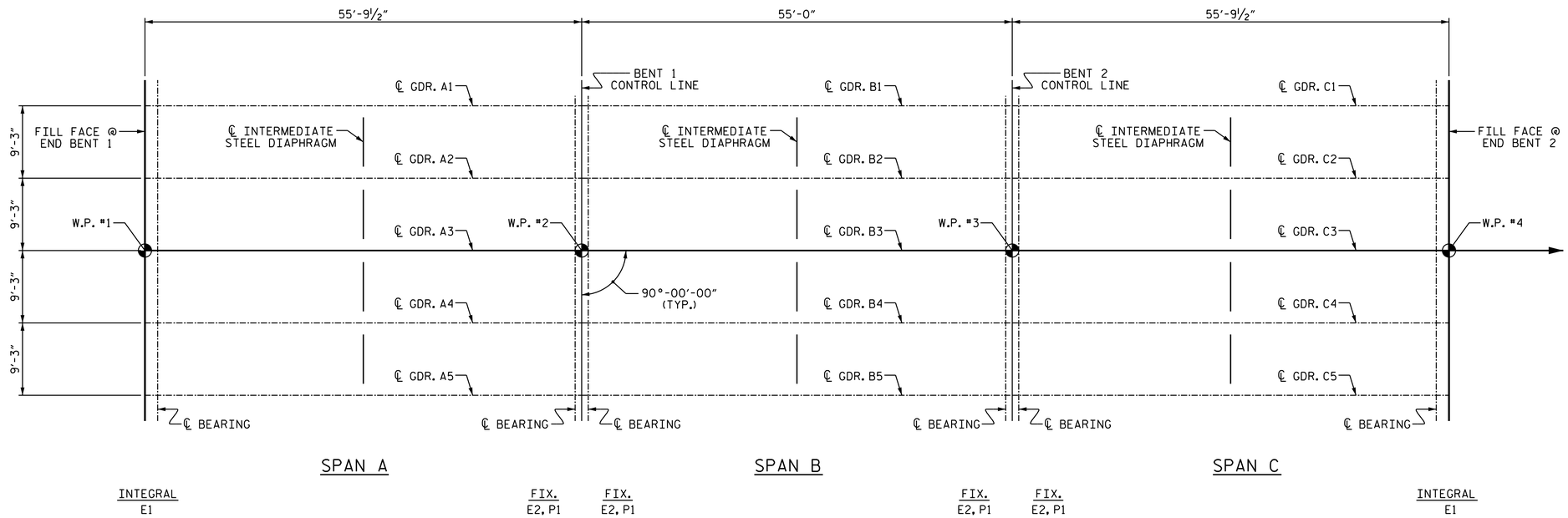

GIRDER LAYOUT

PROJECT NO. B-4635

SAMPSON COUNTY

STATION: 19+80.60 -L-

STATE OF NORTH CAROLINA
DEPARTMENT OF TRANSPORTATION
RALEIGH

SUPERSTRUCTURE

FRAMING PLAN

NORTH CAROLINA PROFESSIONAL SEAL 26445 ENGINEER P. KOREY NEWTON

DocuSigned by: P. Korey Newton
4FFE39D143184O7...
12/11/2019

DOCUMENT NOT CONSIDERED FINAL UNLESS ALL SIGNATURES COMPLETED

REVISIONS						SHEET NO.
NO.	BY:	DATE:	NO.	BY:	DATE:	S-10
1			3			TOTAL SHEETS
2			4			30

DRAWN BY : M.K. BEARD DATE : 07/19
CHECKED BY : W.C. SMITH DATE : 08/19
DESIGN ENGINEER OF RECORD: Z. MALIK DATE : 10/19

11-DEC-2019 10:58
H:\Structures\Plans\B4635_SMU_FP_810009.dgn
pknewton

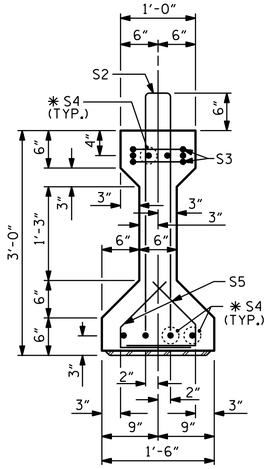

SECTION A-A

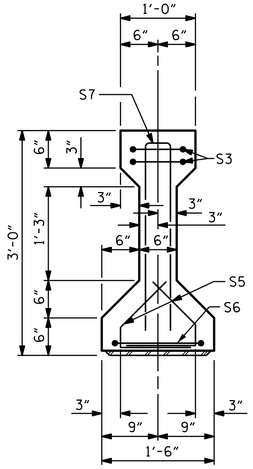

SECTION B-B

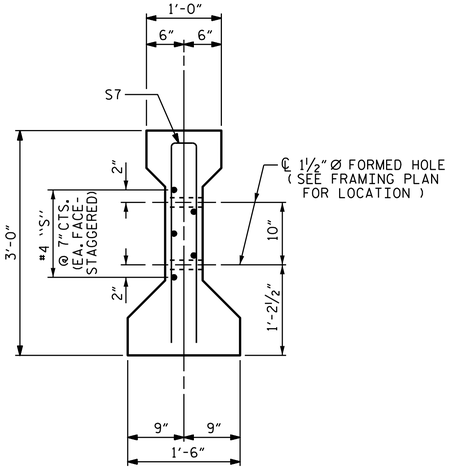

SECTION C-C

(S1 BARS NOT SHOWN)

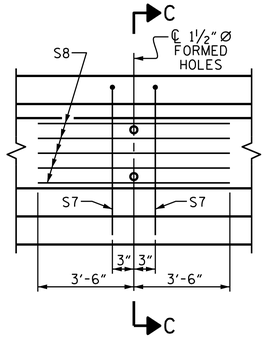

PARTIAL ELEVATION

SHOWING INTERMEDIATE DIAPHRAGM REINFORCING STEEL FOR GIRDER Nos. 1-5

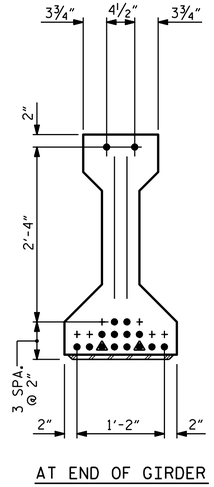

AT END OF GIRDER

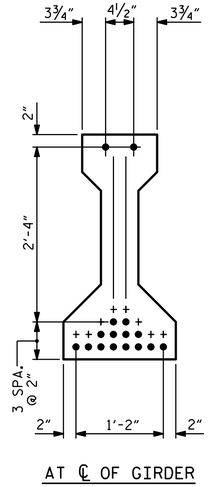

AT ℄ OF GIRDER

0.6" Ø LOW RELAXATION STRAND LAYOUT

▲ STRANDS DEBONDED 12'-0" FROM END OF GIRDER

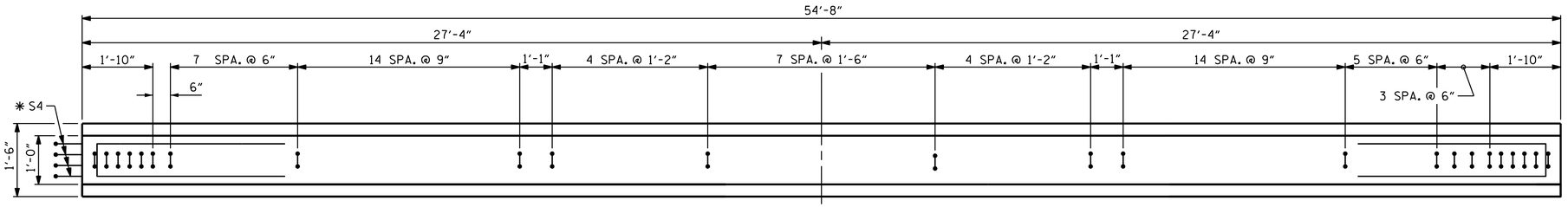

PLAN OF GIRDER

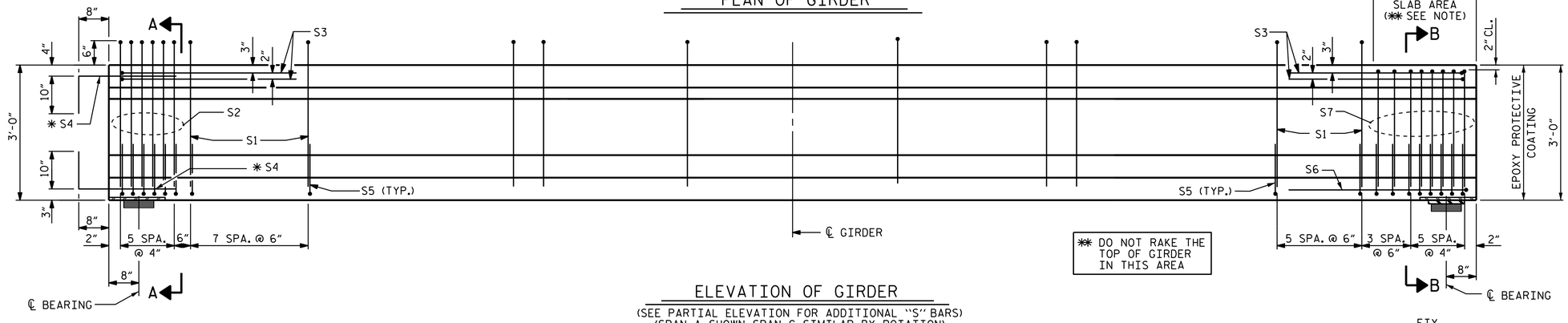

INTEGRAL END BENT

ELEVATION OF GIRDER

(SEE PARTIAL ELEVATION FOR ADDITIONAL "S" BARS)
(SPAN A SHOWN, SPAN C SIMILAR BY ROTATION)

✱✱ DO NOT RAKE THE TOP OF GIRDER IN THIS AREA

FIX

0.6" Ø L. R. GRADE 270 STRANDS

AREA (SQUARE INCHES)	ULTIMATE STRENGTH (LBS. PER STRAND)	APPLIED PRESTRESS (LBS. PER STRAND)
0.217	58,600	43,950

REINFORCING STEEL FOR ONE GIRDER

BAR	NUMBER	SIZE	TYPE	LENGTH	WEIGHT
S1	58	#4	1	6'-10"	265
S2	6	#5	1	6'-10"	43
S3	4	#4	1	8'-8"	23
✱S4	8	#5	STR	3'-8"	31
S5	28	#4	2	2'-4"	44
S6	1	#4	1	9'-2"	6
S7	10	#5	1	5'-8"	59
S8	5	#4	STR	7'-0"	23

✱ NOTE: S4 BARS SHALL BE BENT BEFORE SHIPMENT. HEAT BENDING SHALL NOT BE ALLOWED.

BAR TYPES

ALL BAR DIMENSIONS ARE OUT-TO-OUT

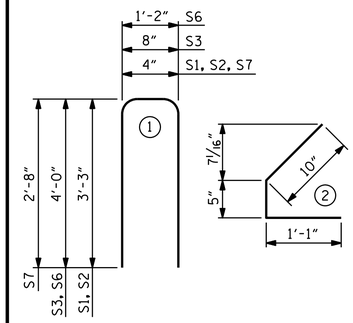

QUANTITIES FOR ONE GIRDER

	REINFORCING STEEL LB.	7500 PSI CONCRETE C.Y.	0.6" Ø L.R. STRANDS No.
	494	5.2	16

GIRDERS REQUIRED

NUMBER	LENGTH	TOTAL LENGTH
10	54'-8"	546.67

PROJECT NO. B-4635

SAMPSON COUNTY

STATION: 19+80.60 -L-

SHEET 1 OF 3

STATE OF NORTH CAROLINA
DEPARTMENT OF TRANSPORTATION
RALEIGH

STANDARD
AASHTO TYPE II
PRESTRESSED CONCRETE GIRDER
CONTINUOUS FOR LIVE LOAD
(SPAN A & C)

REVISIONS						SHEET NO.
NO.	BY:	DATE:	NO.	BY:	DATE:	S-11
1			3			TOTAL SHEETS
2			4			30

DESIGN ENGINEER OF RECORD: Z. MALIK DATE: 10/19		
ASSEMBLED BY : M.K. BEARD	DATE : 07/19	
CHECKED BY : W.C. SMITH	DATE : 07/19	
DRAWN BY : ELR 8/91	REV. 10/1/11	MAA/GM
CHECKED BY : GRP 8/91	REV. 1/15	MAA/TMC
	REV. 12/17	MAA/THC

NORTH CAROLINA PROFESSIONAL SEAL 26445 ENGINEER P. KOREY NEWTON

DocuSigned by: P. Korey Newton 4FFE9DD1431B427... 2/11/2020

DOCUMENT NOT CONSIDERED FINAL UNLESS ALL SIGNATURES COMPLETED

11-FEB-2020 17:52
H:\Structures\Plans\B4635_SMU_ G*_810009.dgn
pknewton

STD. NO. PCG4 (Sht. 2)

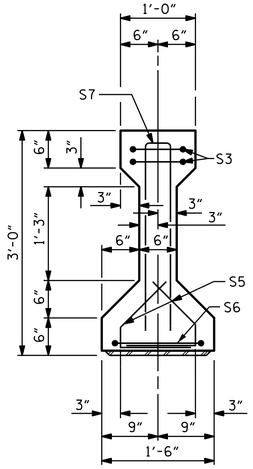

SECTION B-B

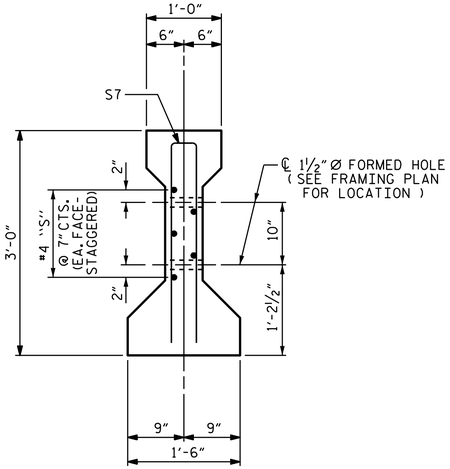

SECTION C-C

(S1 BARS NOT SHOWN)

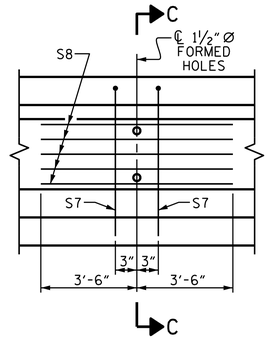

PARTIAL ELEVATION

SHOWING INTERMEDIATE DIAPHRAGM
REINFORCING STEEL FOR GIRDER Nos. 1-5

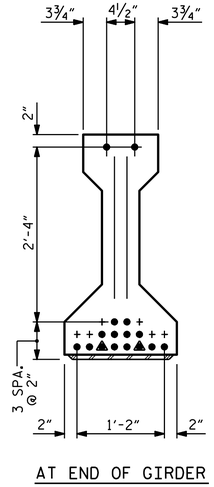

AT END OF GIRDER

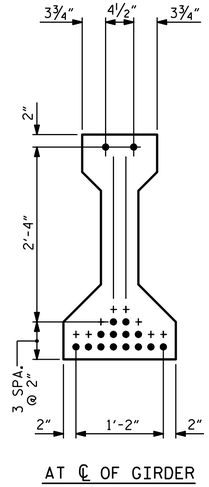

AT ℄ OF GIRDER

0.6" Ø LOW RELAXATION STRAND LAYOUT

▲ STRANDS DEBONDED 12'-0" FROM END OF GIRDER

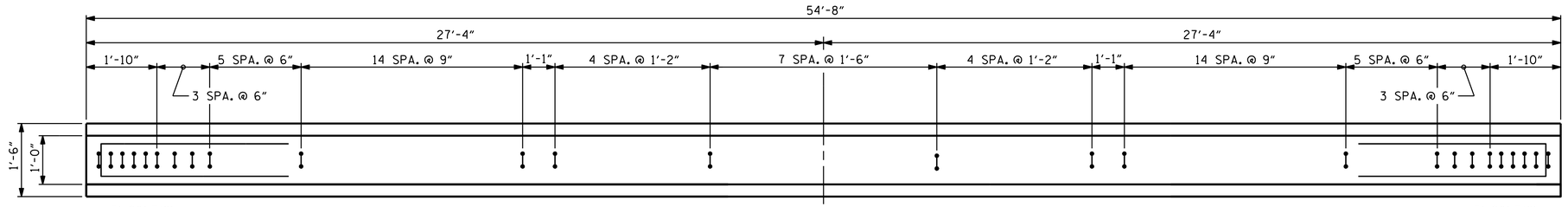

PLAN OF GIRDER

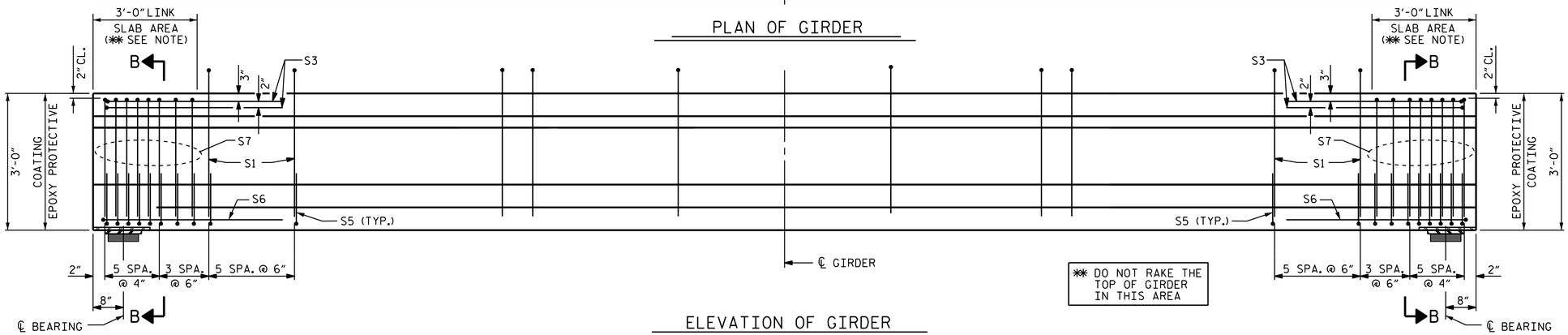

ELEVATION OF GIRDER

(SEE PARTIAL ELEVATION FOR ADDITIONAL "S" BARS)

0.6" Ø L. R. GRADE 270 STRANDS

AREA (SQUARE INCHES)	ULTIMATE STRENGTH (LBS. PER STRAND)	APPLIED PRESTRESS (LBS. PER STRAND)
0.217	58,600	43,950

REINFORCING STEEL FOR ONE GIRDER

BAR	NUMBER	SIZE	TYPE	LENGTH	WEIGHT
S1	63	#4	1	6'-10"	288
S3	4	#4	1	8'-8"	23
S5	28	#4	2	2'-4"	44
S6	2	#4	1	9'-2"	12
S7	14	#5	1	5'-8"	83
S8	5	#4	STR	7'-0"	23

BAR TYPES

ALL BAR DIMENSIONS ARE OUT-TO-OUT

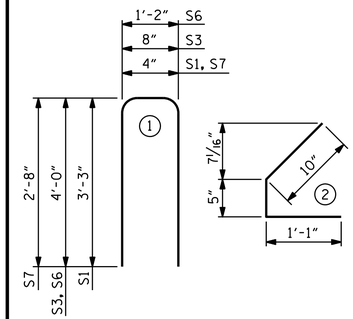

QUANTITIES FOR ONE GIRDER

	REINFORCING STEEL LB.	7500 PSI CONCRETE C.Y.	0.6" Ø L.R. STRANDS No.
	473	5.2	16

GIRDERS REQUIRED

NUMBER	LENGTH	TOTAL LENGTH
5	54'-8"	273.33

PROJECT NO. B-4635

SAMPSON COUNTY

STATION: 19+80.60 -L-

SHEET 2 OF 3

STATE OF NORTH CAROLINA
DEPARTMENT OF TRANSPORTATION
RALEIGH

STANDARD
AASHTO TYPE II
PRESTRESSED CONCRETE GIRDER
CONTINUOUS FOR LIVE LOAD
(SPAN B)

REVISIONS						SHEET NO.
NO.	BY:	DATE:	NO.	BY:	DATE:	S-12
1			3			TOTAL SHEETS
2			4			30

DESIGN ENGINEER OF RECORD: Z. MALIK DATE : 10/19

ASSEMBLED BY : M.K. BEARD DATE : 07/19
CHECKED BY : W.C. SMITH DATE : 07/19

DRAWN BY : ELR 8/91
CHECKED BY : GRP 8/91

REV. 10/1/11 MAA/GM
REV. 1/15 MAA/TMC
REV. 12/17 MAA/THC

NORTH CAROLINA PROFESSIONAL SEAL 26445 P.E. ENGINEER COREY NEWTON

DocuSigned by: P. Korey Newton 4FE5360143184D7... 2/10/2020

DOCUMENT NOT CONSIDERED FINAL UNLESS ALL SIGNATURES COMPLETED

10-FEB-2020 14:53
H:\Structures\Plans\B4635_SMU_ G*_810009.dgn
pknewton

STD. NO. PCG4 (Sht. 2)

DEAD LOAD DEFLECTION TABLE FOR GIRDERS

SPANS A, B & C											
0.6"Ø LOW RELAXATION	EXTERIOR GIRDERS 1 & 5										
TENTH POINTS	0	.1	.2	.3	.4	.5	.6	.7	.8	.9	0
CAMBER (GIRDER ALONE IN PLACE)	0	0.031	0.059	0.080	0.094	0.099	0.094	0.080	0.059	0.031	0
✱DEFLECTION DUE TO SUPERIMPOSED D.L.	0	0.021	0.040	0.054	0.064	0.067	0.064	0.054	0.040	0.021	0
FINAL CAMBER	0	1/8"	1/4"	5/16"	3/8"	3/8"	3/8"	5/16"	1/4"	1/8"	0

SPANS A, B & C											
0.6"Ø LOW RELAXATION	INTERIOR GIRDERS 2, 3 & 4										
TENTH POINTS	0	.1	.2	.3	.4	.5	.6	.7	.8	.9	0
CAMBER (GIRDER ALONE IN PLACE)	0	0.031	0.059	0.080	0.094	0.099	0.094	0.080	0.059	0.031	0
✱DEFLECTION DUE TO SUPERIMPOSED D.L.	0	0.024	0.045	0.061	0.072	0.075	0.072	0.061	0.045	0.024	0
FINAL CAMBER	0	1/16"	3/16"	1/4"	1/4"	1/4"	1/4"	1/4"	3/16"	1/16"	0

✱INCLUDES FUTURE WEARING SURFACE
ALL VALUES ARE SHOWN IN FEET (DECIMAL FORM), EXCEPT "FINAL CAMBER", WHICH IS GIVEN IN INCHES (FRACTION FORM).

NOTES

ALL PRESTRESSING STRANDS SHALL BE 7-WIRE LOW-RELAXATION GRADE 270 STRANDS AND SHALL CONFORM TO AASHTO M203 EXCEPT FOR SAMPLING REQUIREMENTS WHICH SHALL BE IN ACCORDANCE WITH THE STANDARD SPECIFICATIONS.

ALL REINFORCING STEEL SHALL BE GRADE 60.

APPLY EPOXY PROTECTIVE COATING TO END OF GIRDER SURFACES INDICATED IN ELEVATION VIEW.

EMBEDDED PLATE "B-1" SHALL BE GALVANIZED IN ACCORDANCE WITH THE STANDARD SPECIFICATIONS.

ANCHOR STUDS SHALL CONFORM TO AASHTO M169 GRADES 1010 THROUGH 1020 OR APPROVED EQUAL, AND SHALL MEET THE TYPE "B" REQUIREMENTS OF SUBSECTION 7.3 OF THE ANSI/AASHTO/AWS D1.5 BRIDGE WELDING CODE.

AT ENDS OF GIRDERS TO BE EMBEDDED IN CONCRETE DIAPHRAGMS OR END WALLS, PRESTRESSING STRANDS MAY EXTEND A MAXIMUM OF 2" BEYOND THE GIRDER ENDS. OTHERWISE, PRESTRESSING STRANDS SHALL BE CUT FLUSH WITH THE GIRDER ENDS.

THE TRANSFER OF LOAD FROM THE ANCHORAGES TO THE GIRDER SHALL BE DONE WHEN CONCRETE HAS REACHED A COMPRESSIVE STRENGTH OF NOT LESS THAN 6000 PSI.

DEPENDING ON THE TYPE OF SYSTEM USED TO SUPPORT THE DECK SLAB FORMS, PRESET ANCHORS MAY BE NECESSARY IN THE PRESTRESSED CONCRETE GIRDER.

THE TOP SURFACE OF THE GIRDER, EXCLUDING THE OUTSIDE 4", SHALL BE RAKED TO A DEPTH OF 1/4".

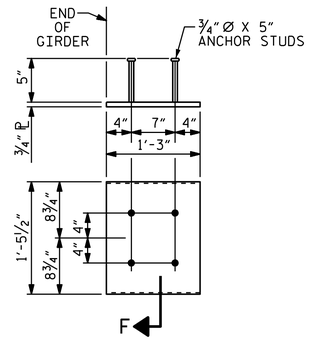

EMBEDDED PLATE "B-1" DETAILS
FOR AASHTO TYPE II GIRDER
(2 REQ'D PER GIRDER)

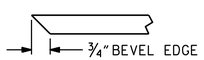

SECTION "F"
(SEE NOTES)

PROJECT NO. B-4635
SAMPSON COUNTY
STATION: 19+80.60 -L-

SHEET 3 OF 3

STATE OF NORTH CAROLINA
DEPARTMENT OF TRANSPORTATION
RALEIGH

STANDARD

PRESTRESSED CONCRETE GIRDER
CONTINUOUS FOR LIVE LOAD
DETAILS

NORTH CAROLINA PROFESSIONAL SEAL 26445 ENGINEER P. KOREY NEWTON

DocuSigned by: P. Korey Newton 4FFE38D142184D7...
12/11/2019

DOCUMENT NOT CONSIDERED FINAL UNLESS ALL SIGNATURES COMPLETED

REVISIONS						SHEET NO.
NO.	BY:	DATE:	NO.	BY:	DATE:	S-13
1			3			TOTAL SHEETS
2			4			30

DESIGN ENGINEER OF RECORD: Z. MALIK	DATE : 10/19	
ASSEMBLED BY : M.K. BEARD	DATE : 07/19	
CHECKED BY : W.C. SMITH	DATE : 07/19	
DRAWN BY : ELR 11/91	REV. 1/15	MAA/TMG
CHECKED BY : GRP 11/91	REV. 2/15	MAA/TMG
	REV. 12/17	MAA/THC

11-DEC-2019 10:58
H:\Structures\Plans\B4635_SMU_ G"_810009.dgn
pknewton

STD. NO. PCG9 (Sht. 1)

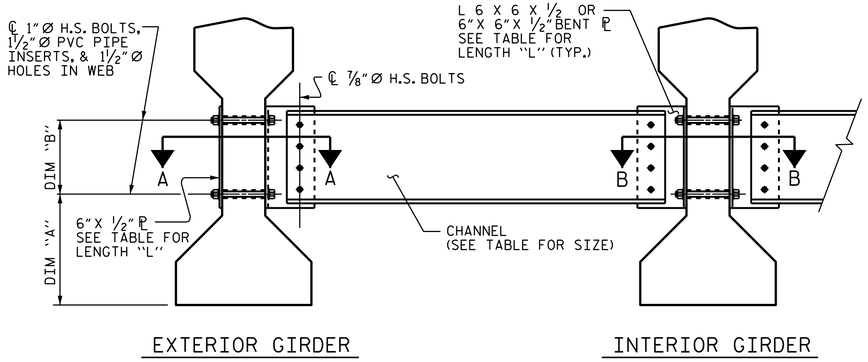

PART SECTION AT INTERMEDIATE DIAPHRAGM

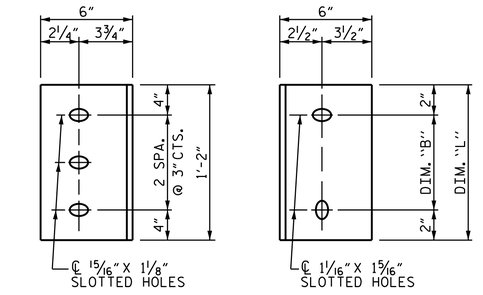

DIAPHRAGM FACE WEB FACE

CONNECTOR PLATE DETAILS

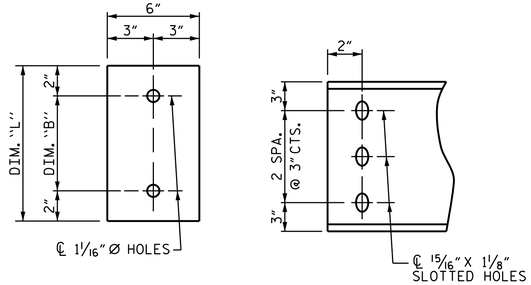

PLATE DETAILS CHANNEL END

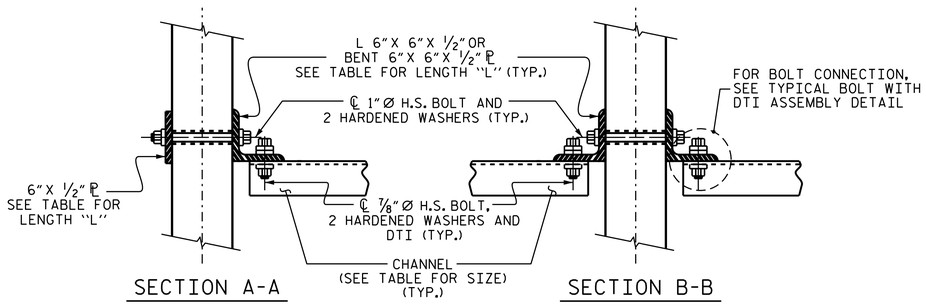

SECTION A-A SECTION B-B

CONNECTION DETAILS

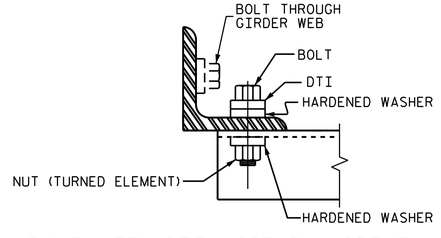

BOLT WITH DTI ASSEMBLY DETAIL

STRUCTURAL STEEL NOTES

ALL INTERMEDIATE DIAPHRAGM STEEL AND CONNECTOR PLATES SHALL BE AASHTO M270 GRADE 50 OR APPROVED EQUAL.

TENSION ON THE ASTM A325 BOLTS THROUGH THE CHANNEL MEMBER SHALL BE CALIBRATED USING DIRECT TENSION INDICATOR WASHERS IN ACCORDANCE WITH THE STANDARD SPECIFICATIONS.

TENSION ON THE ASTM A449 BOLTS THROUGH THE GIRDER WEB SHALL BE SNUG TIGHTENED FOLLOWED BY AN ADDITIONAL ¼ TURN.

THE PLATES, BENT PLATES, CHANNELS, AND ANGLES SHALL BE GALVANIZED OR METALLIZED IN ACCORDANCE WITH THE STANDARD SPECIFICATIONS. FOR THERMAL SPRAYED COATINGS (METALLIZATION), SEE SPECIAL PROVISIONS.

FOR METALLIZATION, APPLY A THERMAL SPRAYED COATING WITH A SEAL COAT TO ALL STEEL DIAPHRAGM SURFACES IN ACCORDANCE WITH THE DEPARTMENTS THERMAL SPRAYED COATINGS (METALLIZATION) PROGRAM, THERMAL SPRAYED COATINGS SPECIAL PROVISION AND SECTION 442 OF THE STANDARD SPECIFICATIONS.

FOR METALLIZATION, APPLY 1 COAT EACH OF 1080-12 BROWN AND 1080-12 GRAY PAINT ON THE EDGES AND THE WEB FACE OF THE CONNECTOR PLATE WHICH COMES IN CONTACT WITH THE CONCRETE GIRDER IN ACCORDANCE WITH SECTION 442 OF THE STANDARD SPECIFICATIONS.

GALVANIZE THE HIGH STRENGTH BOLTS, NUTS, WASHERS AND DIRECT TENSION INDICATORS IN ACCORDANCE WITH THE STANDARD SPECIFICATIONS.

USE AN ASTM F436 HARDENED WASHER WITH STANDARD AND SLOTTED HOLES UNDER EACH BOLT HEAD AND NUT.

FOR BOLTS THROUGH THE GIRDER WEB, PROVIDE SUFFICIENT LENGTH OF THREADS ON ALL BOLTS TO ACCOMMODATE WASHERS AND THE THICKNESS OF CONNECTING MEMBER PLUS AT LEAST ¼" PROJECTION BEYOND THE NUT.

INTERMEDIATE DIAPHRAGM ASSEMBLY SHALL COMPLY WITH SECTION 1072 OF THE STANDARD SPECIFICATIONS.

SUBMIT TWO SETS OF WORKING DRAWINGS FOR THE INTERMEDIATE DIAPHRAGM ASSEMBLY FOR REVIEW, COMMENTS AND ACCEPTANCE. AFTER REVIEW, COMMENTS, AND ACCEPTANCE, SUBMIT SEVEN SETS FOR DISTRIBUTION.

IN THE EXTERIOR BAYS, PLACE TEMPORARY STRUTS BETWEEN PRESTRESSED GIRDERS ADJACENT TO THE STEEL DIAPHRAGMS. STRUTS SHALL REMAIN IN PLACE 3 DAYS AFTER CONCRETE IS PLACED.

THE COST OF THE STEEL DIAPHRAGMS AND ASSEMBLIES SHALL BE INCLUDED IN THE UNIT PRICE BID FOR PRESTRESSED CONCRETE GIRDERS.

TABLE

GIRDER TYPE	CHANNEL SIZE	DIM "A"	DIM "B"	DIM "L"
II	MC 12 x 31	1'-2½"	10"	1'-2"

PROJECT NO. B-4635

SAMPSON COUNTY

STATION: 19+80.60 -L-

NORTH CAROLINA PROFESSIONAL SEAL 26445 ENGINEER P. KOREY NEWTON

DocuSigned by: P. Korey Newton 4FFE38D1421B407...

12/11/2019

STATE OF NORTH CAROLINA
DEPARTMENT OF TRANSPORTATION
RALEIGH

STANDARD

INTERMEDIATE STEEL DIAPHRAGMS FOR TYPE II PRESTRESSED CONCRETE GIRDERS

REVISIONS						SHEET NO.
NO.	BY:	DATE:	NO.	BY:	DATE:	S-14
1			3			TOTAL SHEETS
2			4			30

DOCUMENT NOT CONSIDERED FINAL UNLESS ALL SIGNATURES COMPLETED

ASSEMBLED BY : M.K. BEARD		DATE : 06/19	
CHECKED BY : W.C. SMITH		DATE : 07/19	
DRAWN BY : TLA 6/05	REV. 5/1/06RRR		KMM/GM
CHECKED BY : VC 6/05	REV. 10/1/11		MAA/GM
	REV. 12/17		MAA/THC

11-DEC-2019 10:58
H:\Structures\Plans\B4635_SMU. G*_810009.dgn
pknewton

STD. NO. PCG10 (SHT 3)

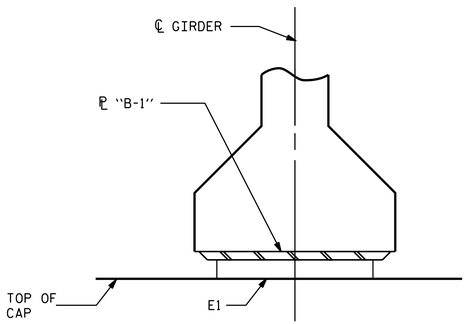

SECTION F-F

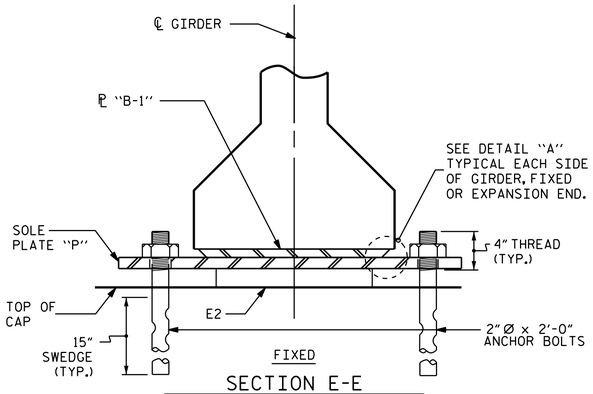

SECTION E-E

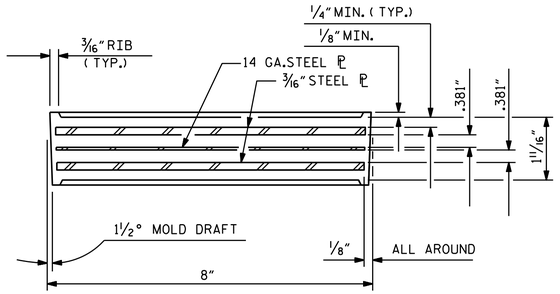

TYPICAL SECTION OF ELASTOMERIC BEARINGS

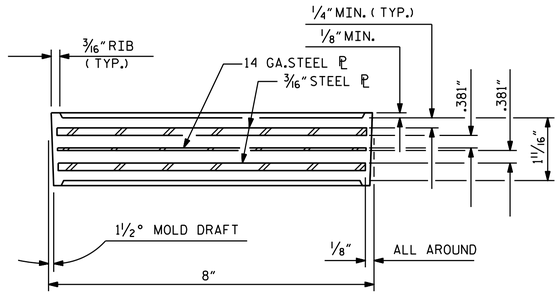

TYPICAL SECTION OF ELASTOMERIC BEARINGS

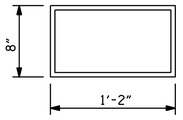

E1 (10 REQ'D)

PLAN VIEW OF ELASTOMERIC BEARING

TYPE II

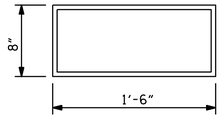

E2 (20 REQ'D)

PLAN VIEW OF ELASTOMERIC BEARING

TYPE III

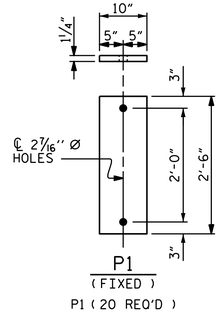

P1 (20 REQ'D)

SOLE PLATE DETAILS ("P")

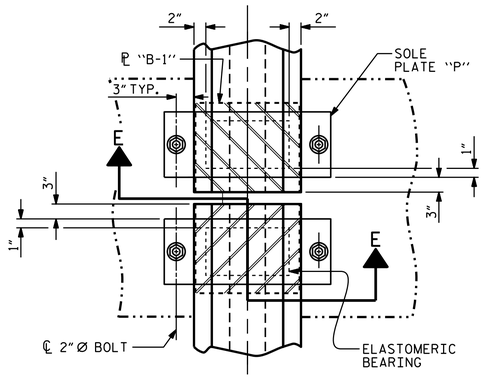

TYPICAL HALF-PLAN

(SHOWING CONTINUOUS BENT)

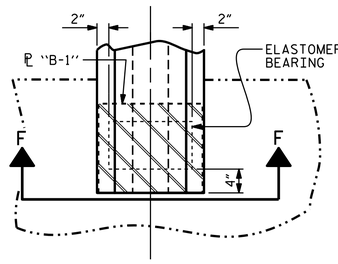

TYPICAL HALF-PLAN

(SHOWING INTEGRAL END BENT)

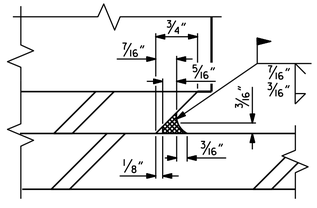

DETAIL "A"

NOTES

AT ALL FIXED POINTS OF SUPPORT, NUTS FOR ANCHOR BOLTS ARE TO BE TIGHTENED FINGER TIGHT AND THEN BACKED OFF 1/2 TURN. THE THREAD OF THE NUT AND BOLT SHALL THEN BE BURRED WITH A SHARP POINTED TOOL.

THE 2" Ø PIPE SLEEVE SHALL BE CUT FROM SCHEDULE 40 PVC PLASTIC PIPE. THE PVC PLASTIC PIPE SHALL MEET THE REQUIREMENTS OF ASTM D1785.

STEEL SOLE PLATES, ANCHOR BOLTS, NUTS, AND WASHERS SHALL BE GALVANIZED IN ACCORDANCE WITH THE STANDARD SPECIFICATIONS.

PRIOR TO WELDING, GRIND THE GALVANIZED SURFACE OF THE PORTION OF THE EMBEDDED PLATE AND SOLE PLATE THAT ARE TO BE WELDED. AFTER WELDING, DAMAGED GALVANIZED SURFACES SHALL BE REPAIRED IN ACCORDANCE WITH THE STANDARD SPECIFICATIONS.

WHEN WELDING THE SOLE PLATE TO THE EMBEDDED PLATE IN THE GIRDER, USE TEMPERATURE INDICATING WAX PENS, OR OTHER SUITABLE MEANS, TO ENSURE THAT THE TEMPERATURE OF THE SOLE PLATE DOES NOT EXCEED 300°F. TEMPERATURES ABOVE THIS MAY DAMAGE THE ELASTOMER.

SOLE PLATE "P", BOLTS, NUTS, WASHERS, AND PIPE SLEEVE SHALL BE INCLUDED IN THE PAY ITEM FOR PRESTRESSED CONCRETE GIRDERS.

ANCHOR BOLTS SHALL MEET THE REQUIREMENTS OF ASTM A449. NUTS SHALL MEET THE REQUIREMENTS OF AASHTO M291-DH OR AASHTO M292-2H. WASHERS SHALL MEET THE REQUIREMENTS OF AASHTO M293. SHOP DRAWINGS ARE NOT REQUIRED FOR ANCHOR BOLT, NUTS AND WASHERS. SHOP INSPECTION IS REQUIRED.

ALL SURFACES OF BEARING PLATES SHALL BE SMOOTH AND STRAIGHT.

THE ELASTOMER IN THE STEEL REINFORCED BEARINGS SHALL HAVE A SHEAR MODULUS OF 0.160 KSI, IN ACCORDANCE WITH AASHTO M251.

FOR STEEL REINFORCED ELASTOMERIC BEARINGS, SEE SPECIAL PROVISIONS.

ALL SOLE PLATES SHALL BE AASHTO M270 GRADE 36.

MAXIMUM ALLOWABLE SERVICE LOADS	
D.L.+L.L. (NO IMPACT)	
TYPE II	145 k
TYPE III	205 k

PROJECT NO. B-4635

SAMPSON COUNTY

STATION: 19+80.60 -L-

DESIGN ENGINEER OF RECORD: Z. MALIK	DATE : 10/19		
ASSEMBLED BY : M.K. BEARD	DATE : 07/19		
CHECKED BY : W.C. SMITH	DATE : 07/19		
DRAWN BY : WJH 8/89	REV. 6/13	AAC/MAA	
CHECKED BY : CRK 8/89	REV. 1/15	MAA/TMG	
	REV. 12/17	MAA/THC	

STATE OF NORTH CAROLINA
DEPARTMENT OF TRANSPORTATION
RALEIGH

STANDARD

ELASTOMERIC BEARING DETAILS

PRESTRESSED CONCRETE GIRDER SUPERSTRUCTURE

NORTH CAROLINA PROFESSIONAL SEAL 26445 ENGINEER P. KORRY NEWTON

DocuSigned by: P. Korry Newton 12/11/2019

DOCUMENT NOT CONSIDERED FINAL UNLESS ALL SIGNATURES COMPLETED

REVISIONS						SHEET NO.
NO.	BY:	DATE:	NO.	BY:	DATE:	S-15
1			3			TOTAL SHEETS
2			4			30

11-DEC-2019 10:58
H:\Structures\Plans\B4635_SMU_ BG_810009.dgn
pknewton

STD. NO. EB3 (SHT 1)

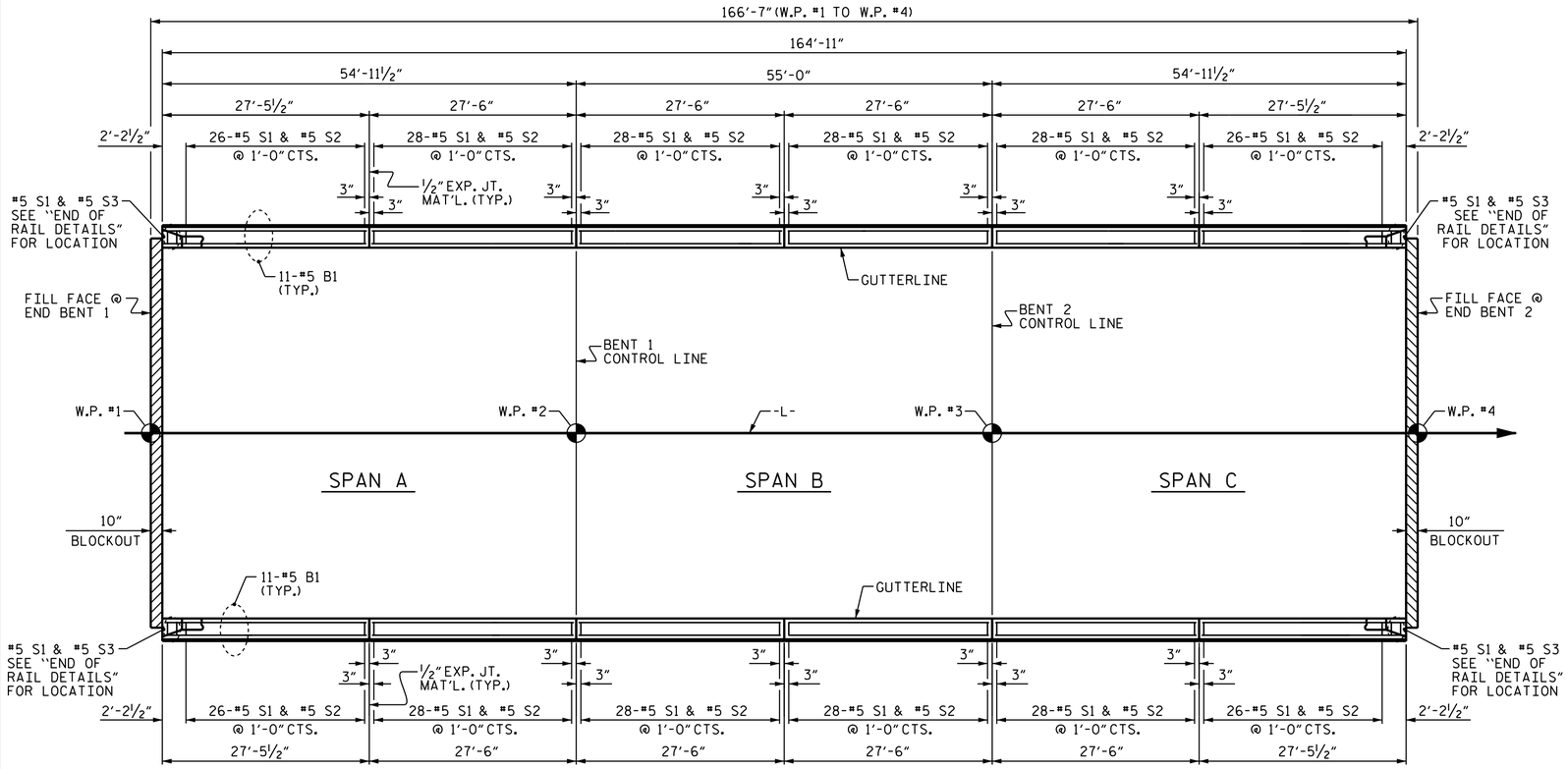

PLAN

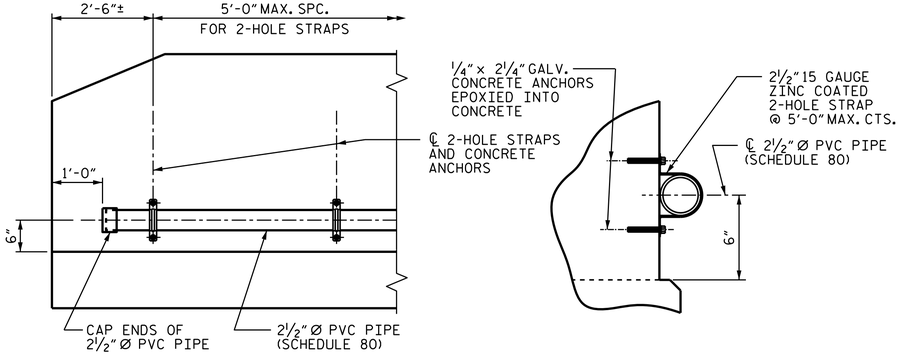

ELEVATION

SECTION

FIBER OPTIC CONDUIT SYSTEM DETAILS

2½" Ø SCHEDULE 80 PVC PIPE ATTACHED TO THE BACK OF BOTH RAILS FOR FUTURE FIBER OPTIC CABLE.

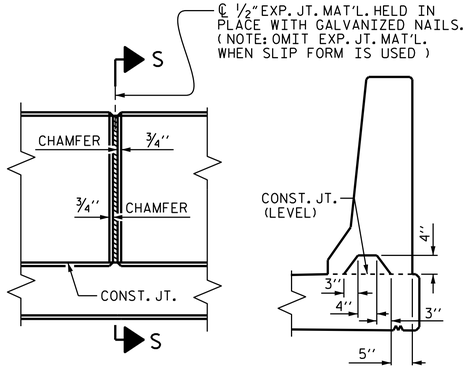

SECTION S-S

AT DAM IN OPEN JOINT (THIS IS TO BE USED ONLY WHEN SLIP FORM IS USED)

ELEVATION AT EXPANSION JOINTS

BARRIER RAIL DETAILS

NOTES

THE BARRIER RAIL SHALL NOT BE CAST UNTIL ALL SLAB CONCRETE IN THAT UNIT HAS BEEN CAST AND HAS REACHED A MINIMUM COMPRESSIVE STRENGTH OF 3,000 PSI.

ALL REINFORCING STEEL IN BARRIER RAILS SHALL BE EPOXY COATED.

GROOVED CONTRACTION JOINTS, 1"2" IN DEPTH, SHALL BE TOOLED IN ALL EXPOSED FACES OF THE BARRIER RAIL AND IN ACCORDANCE WITH ARTICLE 825-10(B) OF THE STANDARD SPECIFICATIONS. THE CONTRACTION JOINT SHALL BE LOCATED AT EACH THIRD POINT BETWEEN BARRIER RAIL EXPANSION JOINTS. ONLY ONE CONTRACTION JOINT IS REQUIRED AT MIDPOINT OF BARRIER RAIL SEGMENTS LESS THAN 20 FEET IN LENGTH AND NO CONTRACTION JOINTS ARE REQUIRED FOR THOSE SEGMENTS LESS THAN 10 FEET IN LENGTH.

FOR FIBER OPTIC CONDUIT SYSTEM, SEE SPECIAL PROVISIONS.

BAR TYPES

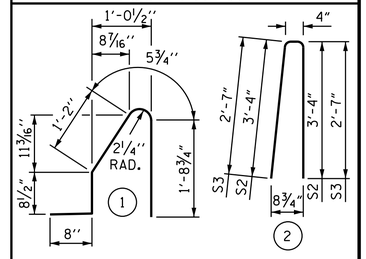

ALL BAR DIMENSIONS ARE OUT TO OUT

BILL OF MATERIAL

FOR CONCRETE BARRIER RAIL ONLY

BAR	NO.	SIZE	TYPE	LENGTH	WEIGHT
* B1	132	#5	STR	27'-1"	3729
* S1	336	#5	1	4'-9"	1665
* S2	328	#5	2	7'-0"	2395
* S3	8	#5	2	5'-6"	46

* EPOXY COATED REINFORCING STEEL	7835 LBS.
CLASS AA CONCRETE	44.8 CU. YDS.
CONCRETE BARRIER RAIL	329.83 LIN. FT.

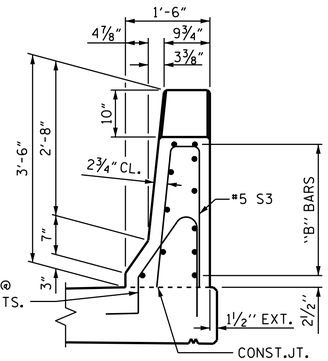

END VIEW

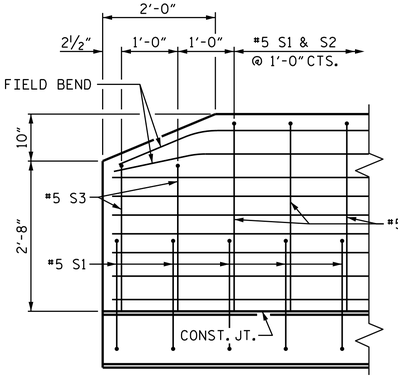

SIDE VIEW

END OF RAIL DETAILS

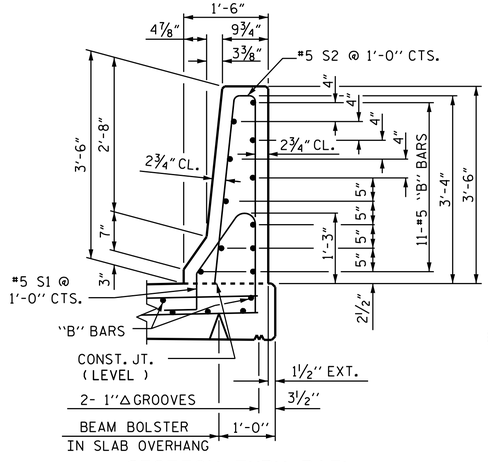

SECTION THRU RAIL

PROJECT NO. B-4635

SAMPSON COUNTY

STATION: 19+80.60 -L-

STATE OF NORTH CAROLINA
DEPARTMENT OF TRANSPORTATION
RALEIGH

STANDARD

CONCRETE BARRIER RAIL

DESIGN ENGINEER OF RECORD: Z. MALIK	DATE : 10/19		
ASSEMBLED BY : M.K. BEARD	DATE : 07/19		
CHECKED BY : W.C. SMITH	DATE : 07/19		
DRAWN BY : ARB 5/87	REV. 7/12	MAA/GM	
CHECKED BY : SJD 9/87	REV. 6/13	MAA/GM	
	REV. 12/17	MAA/THC	

DocuSigned by: P. Korey Newton 4FFE38D1421B407... 12/11/2019

NORTH CAROLINA PROFESSIONAL SEAL 26445 ENGINEER KOREY NEWTON

DOCUMENT NOT CONSIDERED FINAL UNLESS ALL SIGNATURES COMPLETED

REVISIONS						SHEET NO.
NO.	BY:	DATE:	NO.	BY:	DATE:	S-16
1			3			TOTAL SHEETS
2			4			30

11-DEC-2019 10:58
H:\Structures\Plans\B4635_SMU_ BR_810009.dgn
pknewton

STD. NO. CBR1 (SHT 1)

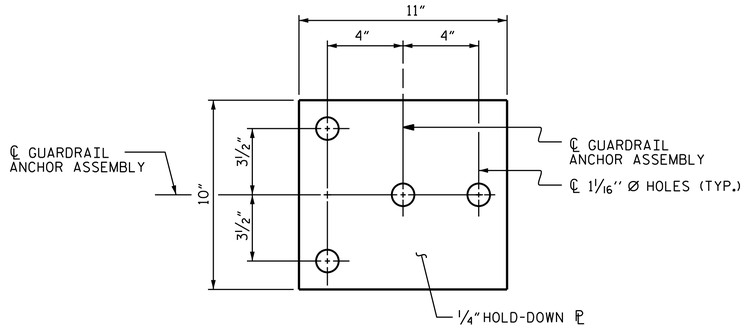

PLAN

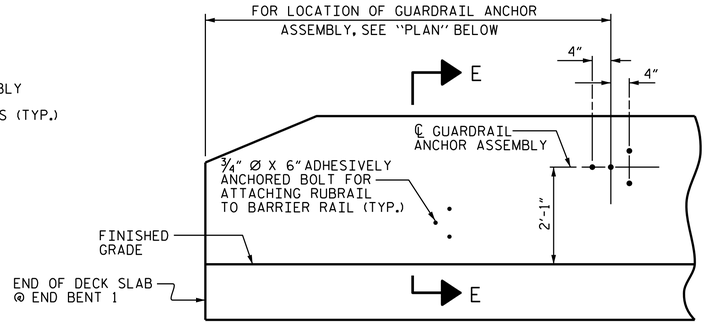

ELEVATION

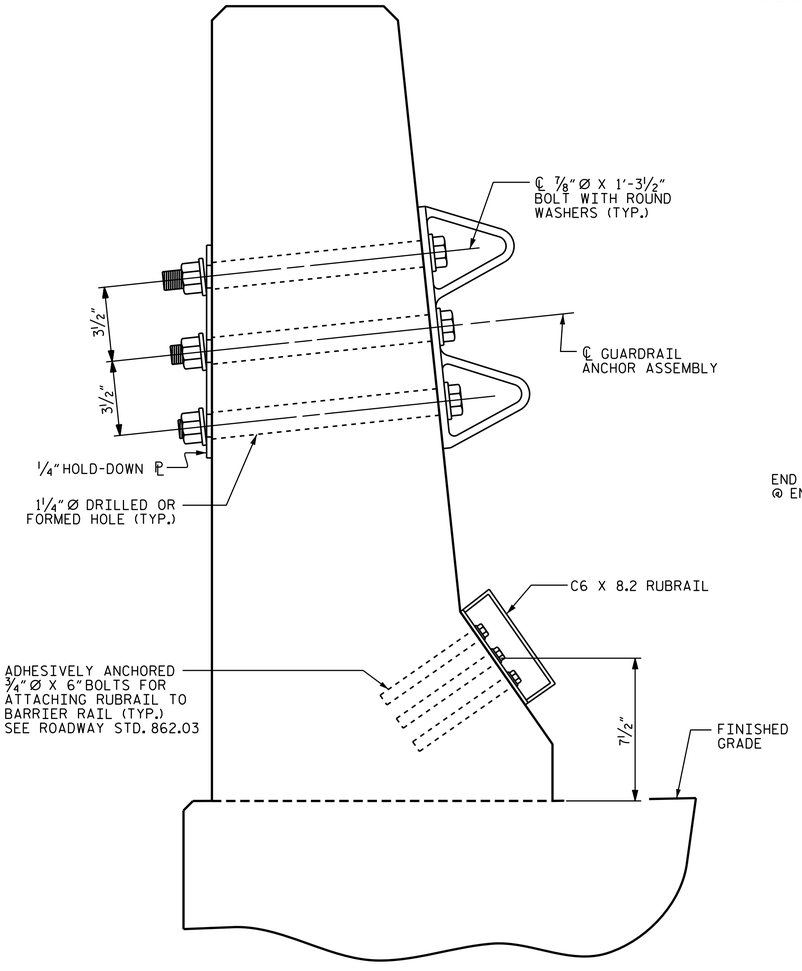

SECTION E-E

GUARDRAIL ANCHOR ASSEMBLY DETAILS

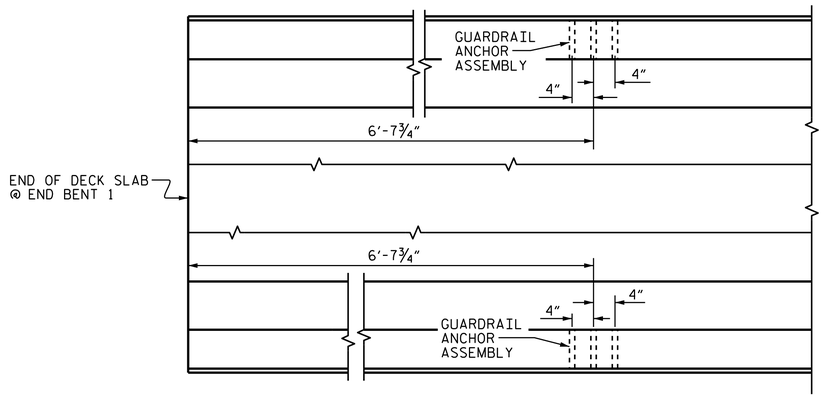

PLAN

LOCATION OF ANCHORS FOR GUARDRAIL

END BENT #1 SHOWN, END BENT #2 SIMILAR.

NOTES

THE GUARDRAIL ANCHOR ASSEMBLY SHALL CONSIST OF A 1/4" HOLD-DOWN PLATE AND 4 - 7/8" Ø BOLTS WITH NUTS AND WASHERS, RUBRAIL, AND ADHESIVELY ANCHORED BOLTS.

THE HOLD-DOWN PLATE SHALL CONFORM TO AASHTO M270 GRADE 36. AFTER FABRICATION, THE HOLD-DOWN PLATE SHALL BE HOT-DIP GALVANIZED IN ACCORDANCE WITH AASHTO M111.

BOLTS SHALL CONFORM TO THE REQUIREMENTS OF ASTM A307 AND NUTS SHALL CONFORM TO THE REQUIREMENTS OF AASHTO M291. BOLTS, NUTS AND WASHERS SHALL BE GALVANIZED. (AT THE CONTRACTOR'S OPTION, STAINLESS STEEL BOLTS, NUTS AND WASHERS MAY BE USED AS AN ALTERNATE FOR THE 7/8" Ø GALVANIZED BOLTS, NUTS AND WASHERS. THEY SHALL CONFORM TO OR EXCEED THE MECHANICAL REQUIREMENTS OF ASTM A307. THE USE OF THIS ALTERNATE SHALL BE APPROVED BY THE ENGINEER.)

THE GUARDRAIL ANCHOR ASSEMBLY IS REQUIRED AT ALL POINTS WHERE APPROACH GUARDRAIL IS TO BE ATTACHED TO THE END OF BARRIER RAIL. FOR POINTS OF ATTACHMENT, SEE SKETCH.

AFTER INSTALLATION, THE EXPOSED THREAD OF THE BOLT SHALL BE BURRED WITH A SHARP POINTED TOOL.

THE COST OF THE GUARDRAIL ANCHOR ASSEMBLY SHALL BE INCLUDED IN THE UNIT CONTRACT PRICE BID FOR CONCRETE BARRIER RAIL.

THE 1 1/4" Ø HOLES SHALL BE FORMED OR DRILLED WITH A CORE BIT. IMPACT TOOLS WILL NOT BE PERMITTED. ANY CONCRETE DAMAGED BY THIS WORK SHALL BE REPAIRED TO THE SATISFACTION OF THE ENGINEER.

THE C6 X 8.2 RUBRAIL IS TO BE ADHESIVELY ANCHORED TO THE RAIL USING THREE 3/4" Ø X 6" BOLTS WITH WASHERS. LEVEL ONE FIELD TESTING IS REQUIRED, AND THE YIELD LOAD OF THE 3/4" Ø BOLT IS 12 KIPS. FOR ADHESIVELY ANCHORED ANCHOR BOLTS OR DOWELS, SEE STANDARD SPECIFICATIONS. SEE ROADWAY STANDARD 862.03 FOR DETAILS AND LOCATION OF THE RUBRAIL.



SKETCH SHOWING POINTS OF ATTACHMENTS

✳ DENOTES GUARDRAIL ANCHOR ASSEMBLY

PROJECT NO. B-4635

SAMPSON COUNTY

STATION: 19+80.60 -L-

NORTH CAROLINA PROFESSIONAL SEAL 26445 ENGINEER P. KOREY NEWTON

Docusigned by: P. Korey Newton 4FF23BD1431B407...

12/11/2019

STATE OF NORTH CAROLINA
DEPARTMENT OF TRANSPORTATION
RALEIGH

STANDARD

GUARDRAIL ANCHORAGE FOR BARRIER RAIL

ASSEMBLED BY : M.K. BEARD	DATE : 07/19		
CHECKED BY : W.C. SMITH	DATE : 07/19		
DRAWN BY : TLA 5/06	REV. 7/12	MAA/GM	
CHECKED BY : GM 5/06	REV. 6/13	MAA/GM	
	REV. 12/17	MAA/THC	

DOCUMENT NOT CONSIDERED FINAL UNLESS ALL SIGNATURES COMPLETED

REVISIONS					
NO.	BY:	DATE:	NO.	BY:	DATE:
1			3		
2			4		

SHEET NO. S-17

TOTAL SHEETS 30

11-DEC-2019 10:58
H:\Structures\Plans\B4635_SMU_ BR_810009.dgn
pknewton

(SHT 1) STD. NO. GRA2

SUPERSTRUCTURE REINFORCING STEEL LENGTHS ARE BASED ON THE FOLLOWING MINIMUM SPLICE LENGTHS

BAR SIZE	SUPERSTRUCTURE EXCEPT APPROACH SLABS, PARAPETS, AND BARRIER RAILS		APPROACH SLABS		PARAPETS AND BARRIER RAILS
	EPOXY COATED	UNCOATED	EPOXY COATED	UNCOATED	
#4	1'-11"	1'-7"	1'-11"	1'-7"	2'-6"
#5	2'-5"	2'-0"	2'-5"	2'-0"	3'-1"
#6	2'-10"	2'-5"	3'-7"	2'-5"	3'-8"

SUPERSTRUCTURE BILL OF MATERIAL

	CLASS AA CONCRETE	REINFORCING STEEL	EPOXY COATED REINFORCING STEEL
	(CU.YDS.)	(LBS.)	(LBS.)
POUR #1	181.9	———	———
POUR #2	60.2	———	———
TOTALS**	242.1	25,964	25,688

**QUANTITIES FOR BARRIER RAIL ARE NOT INCLUDED

GROOVING BRIDGE FLOORS

APPROACH SLABS	1788.3 SQ.FT.
BRIDGE DECK	6089.6 SQ.FT.
TOTAL	7877.9 SQ.FT.

BILL OF MATERIAL

BAR	NO.	SIZE	TYPE	LENGTH	WEIGHT
✳ A1	329	#5	STR	42'-11"	14727
A2	329	#5	STR	42'-11"	14727
✳ B1	170	#6	STR	11'-1"	2830
B2	168	#5	STR	56'-3"	9856
✳ B3	88	#4	STR	26'-1"	1533
✳ B4	88	#5	STR	50'-3"	4612
✳ B5	86	#5	STR	10'-10"	972
B6	50	#5	STR	10'-10"	565
K1	16	#4	STR	22'-5"	240
K2	8	#4	STR	7'-5"	40
K3	16	#4	STR	8'-4"	89
K4	8	#4	STR	7'-11"	42
K5	4	#4	STR	2'-3"	6
K6	8	#4	STR	2'-6"	13
K7	4	#4	STR	2'-0"	5
✳ S1	72	#4	1	11'-11"	573
✳ S2	72	#4	1	9'-2"	441
U1	72	#4	2	7'-11"	381

REINFORCING STEEL 25,964 LBS.
✳ EPOXY COATED REINF. STEEL 25,688 LBS.

BAR TYPES

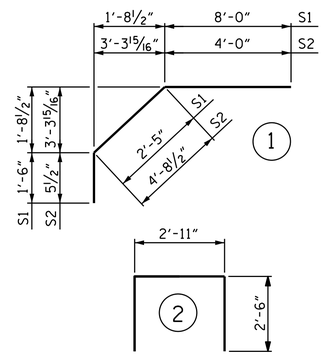

ALL BAR DIMENSIONS ARE OUT TO OUT

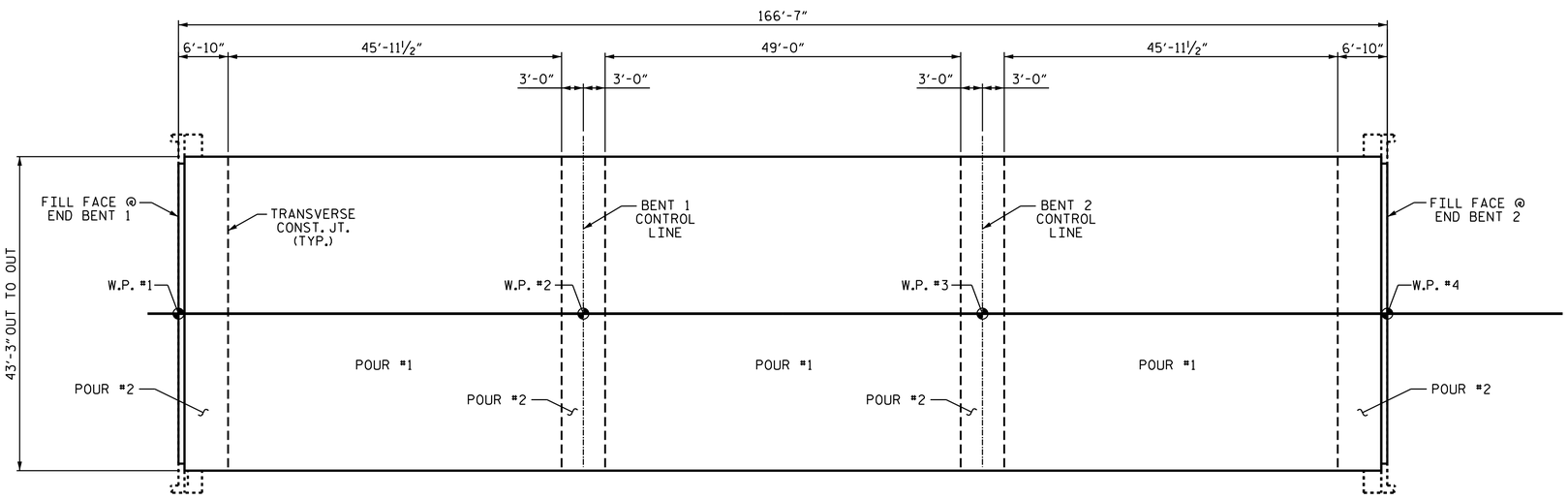

LAYOUT FOR COMPUTING AREA OF REINFORCED CONCRETE DECK SLAB (SQ.FT. = 7133)

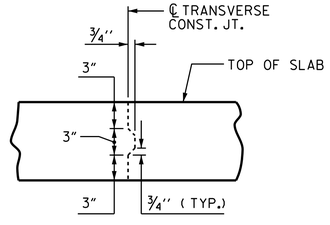

TRANSVERSE CONSTRUCTION JOINT DETAIL

NOTE: REINFORCING STEEL IN SLAB NOT SHOWN.
LONGITUDINAL REINFORCING STEEL SHALL BE CONTINUOUS THRU JOINT

PROJECT NO. B-4635
SAMPSON COUNTY
STATION: 19+80.60 -L-

STATE OF NORTH CAROLINA
DEPARTMENT OF TRANSPORTATION
RALEIGH
STANDARD
SUPERSTRUCTURE BILL OF MATERIAL

NORTH CAROLINA PROFESSIONAL SEAL 26445 ENGINEER P. KOREY NEWTON

DocuSigned by: P. Korey Newton 4FFE39D2431B407...
1/8/2020

DESIGN ENGINEER OF RECORD: Z. MALIK DATE : 10/19
ASSEMBLED BY : M.K. BEARD DATE : 07/19
CHECKED BY : W.C. SMITH DATE : 07/19
DRAWN BY : JMB 5/87
CHECKED BY : SJD 9/87
REV. 10/1/11 MAA/GM
REV. 12/17 MAA/THC
REV. 06/19 BNB/THC

DOCUMENT NOT CONSIDERED FINAL UNLESS ALL SIGNATURES COMPLETED

REVISIONS					
NO.	BY:	DATE:	NO.	BY:	DATE:
1			3		
2			4		

SHEET NO. S-18
TOTAL SHEETS 30

08-JAN-2020 12:57
H:\Structures\Plans\B4635_SMU_ BOM_810009.dgn
pknewton

STD. NO. BOM1

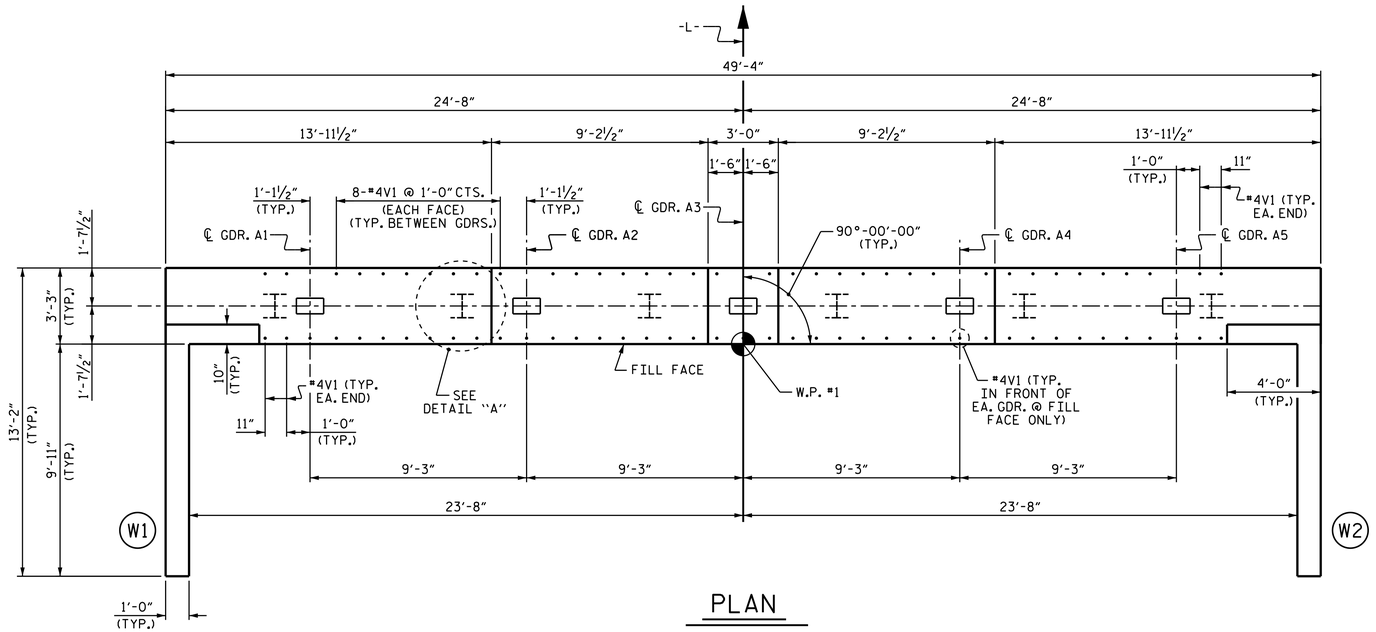

PLAN

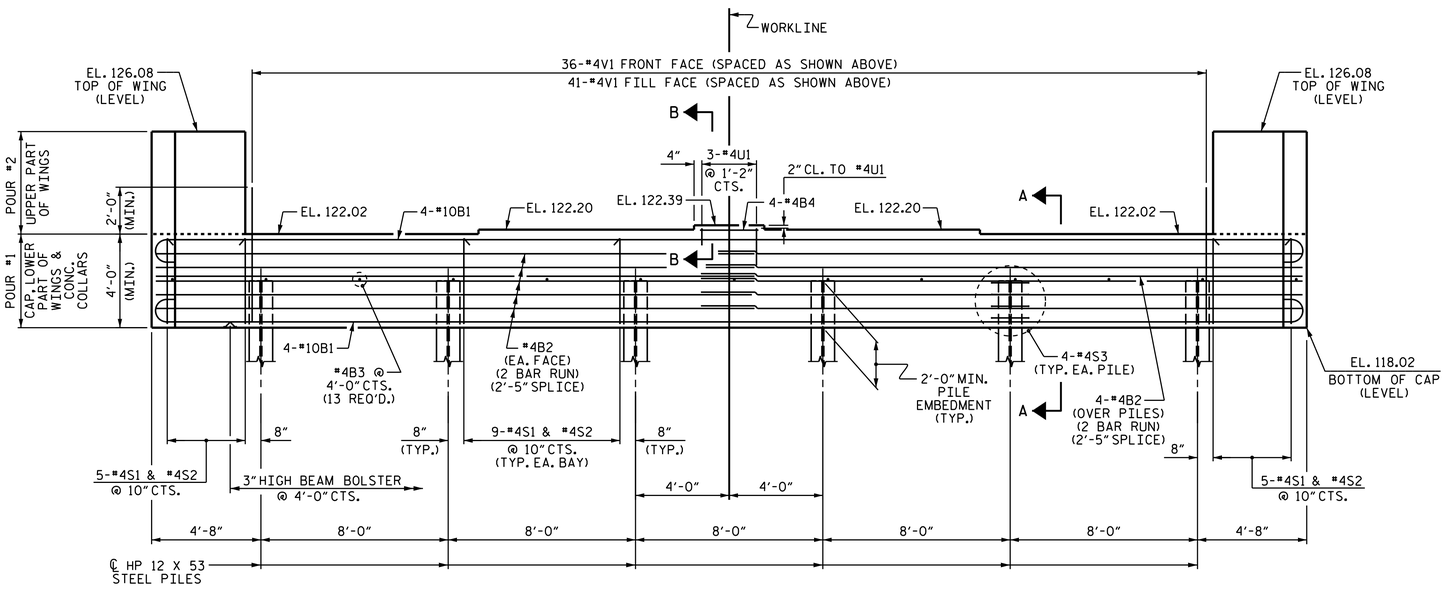

ELEVATION

WINGS NOT SHOWN FOR CLARITY.
FOR SECTION A-A & B-B, SEE SHEET 3 OF 3.
CONCRETE COLLARS FOR STEEL PILES NOT SHOWN IN PLAN & ELEVATION VIEWS FOR CLARITY.
SEE "CORROSION PROTECTION FOR STEEL PILES DETAIL", SHEET 3 OF 3.

NOTES

STIRRUPS IN CAP MAY BE SHIFTED AS NECESSARY TO CLEAR #4V1 BARS.

THE TOP SURFACE OF THE END BENT CAP, EXCEPT THE BEARING AREA, SHALL BE RAKED TO A DEPTH OF ¼".

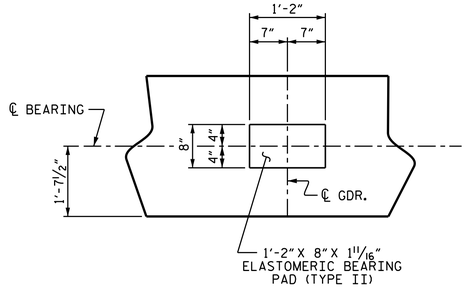

DETAIL "A"
(TYP. EA. GDR.)

PROJECT NO. B-4635
SAMPSON COUNTY
STATION: 19+80.60 -L-

SHEET 1 OF 3

STATE OF NORTH CAROLINA
DEPARTMENT OF TRANSPORTATION
RALEIGH

SUBSTRUCTURE

INTEGRAL
END BENT 1

NORTH CAROLINA PROFESSIONAL SEAL 26445 ENGINEER P. KOREY NEWTON

DocuSigned by: P. Korey Newton
4FF839D1431B407...
2/11/2020

DOCUMENT NOT CONSIDERED FINAL UNLESS ALL SIGNATURES COMPLETED

REVISIONS						SHEET NO.
NO.	BY:	DATE:	NO.	BY:	DATE:	S-19
1			3			TOTAL SHEETS
2			4			30

DRAWN BY : M.K. BEARD DATE : 03/19
CHECKED BY : W.C. SMITH DATE : 07/19
DESIGN ENGINEER OF RECORD: D.R. SHACKELFORD DATE : 10/19

11-FEB-2020 16:04
H:\Structures\Plans\B4635_SMU_ EB_810009.dgn
pknewton

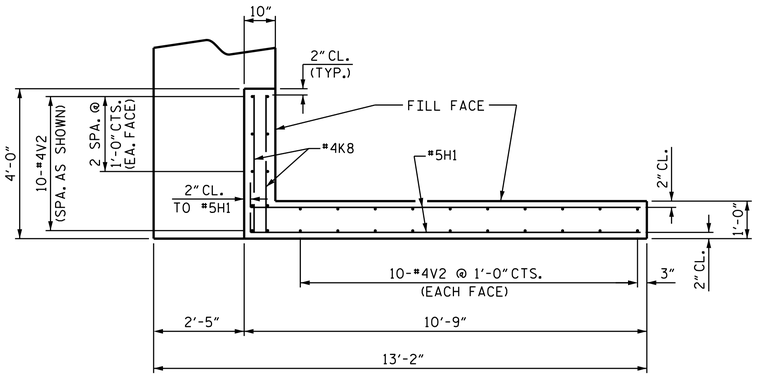

PLAN OF WING W1

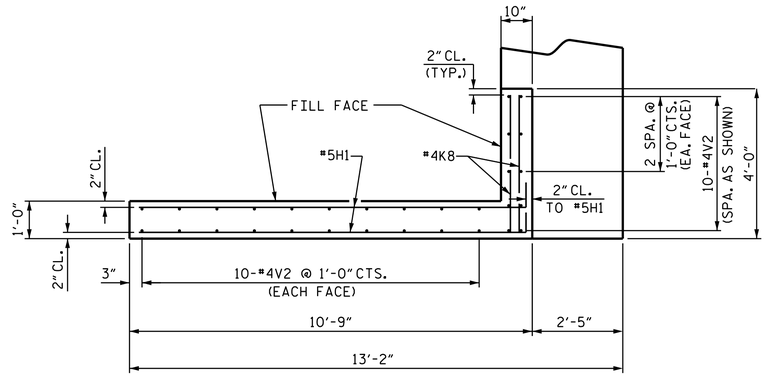

PLAN OF WING W2

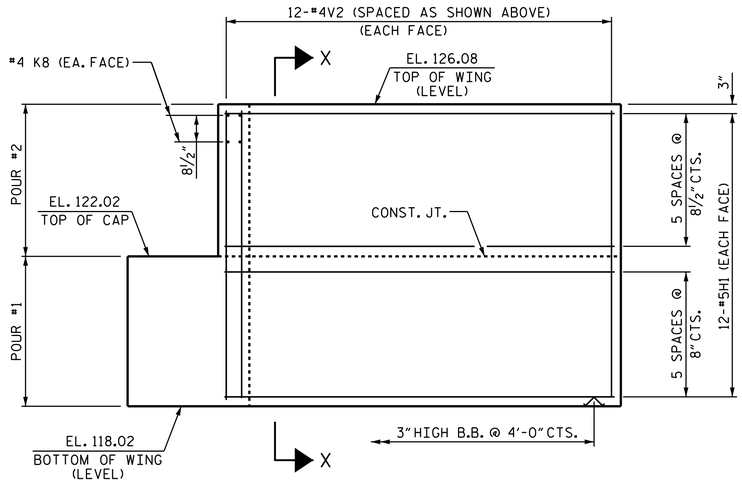

ELEVATON OF WING W1

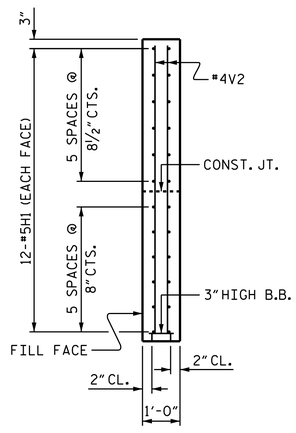

SECTION X-X

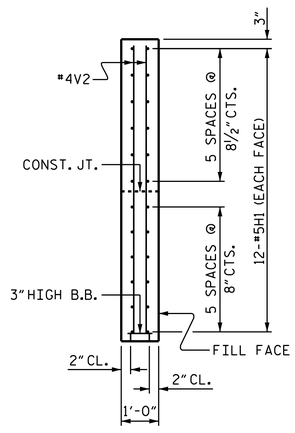

SECTION Y-Y

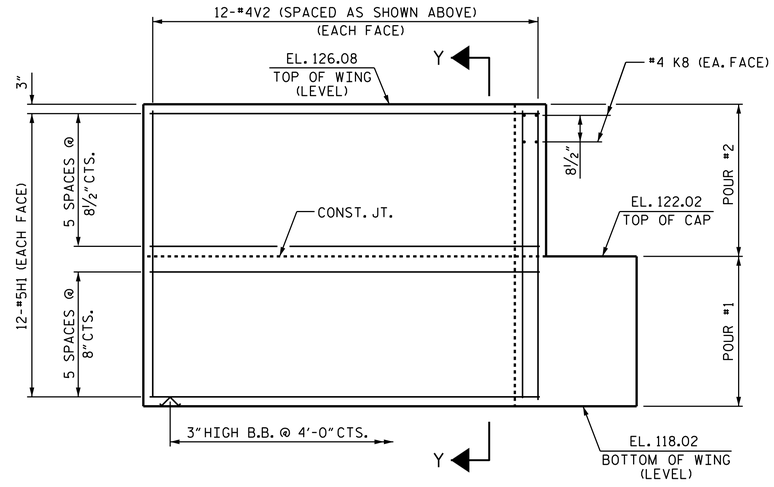

ELEVATON OF WING W2

PROJECT NO. B-4635

SAMPSON COUNTY

STATION: 19+80.60 -L-

SHEET 2 OF 3

STATE OF NORTH CAROLINA
DEPARTMENT OF TRANSPORTATION
RALEIGH

SUBSTRUCTURE

INTEGRAL
END BENT 1

NORTH CAROLINA PROFESSIONAL SEAL 26445 ENGINEER P. KOREY NEWTON

DocuSigned by: P. Korey Newton
4FFE3901431B407...
12/11/2019

DOCUMENT NOT CONSIDERED FINAL UNLESS ALL SIGNATURES COMPLETED

REVISIONS						SHEET NO.
NO.	BY:	DATE:	NO.	BY:	DATE:	S-20
1			3			TOTAL SHEETS
2			4			30

DRAWN BY : M.K. BEARD DATE : 03/19
CHECKED BY : W.C. SMITH DATE : 07/19
DESIGN ENGINEER OF RECORD: D.R. SHACKELFORD DATE : 10/19

11-DEC-2019 10:58
H:\Structures\Plans\B4635_SMU_ EB_810009.dgn
pknewton

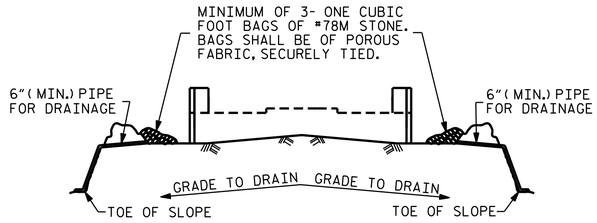

BAGGED STONE AND PIPE SHALL BE PLACED IMMEDIATELY AFTER COMPLETION OF END BENT EXCAVATION. PIPE MAY BE EITHER CONCRETE, CORRUGATED STEEL, CORRUGATED ALUMINUM ALLOY, OR CORRUGATED PLASTIC. PERFORATED PIPE WILL NOT BE ALLOWED.

BAGGED STONE SHALL REMAIN IN PLACE UNTIL THE ENGINEER DIRECTS THAT IT BE REMOVED. THE CONTRACTOR SHALL REMOVE AND DISPOSE OF SILT ACCUMULATIONS AT BAGGED STONE WHEN SO DIRECTED BY THE ENGINEER. BAGS SHALL BE REMOVED AND REPLACED WHENEVER THE ENGINEER DETERMINES THAT THEY HAVE DETERIORATED AND LOST THEIR EFFECTIVENESS.

NO SEPARATE PAYMENT WILL BE MADE FOR THIS WORK AND THE ENTIRE COST OF THIS WORK SHALL BE INCLUDED IN THE UNIT CONTRACT PRICE BID FOR THE SEVERAL PAY ITEMS.

TEMPORARY DRAINAGE AT END BENT

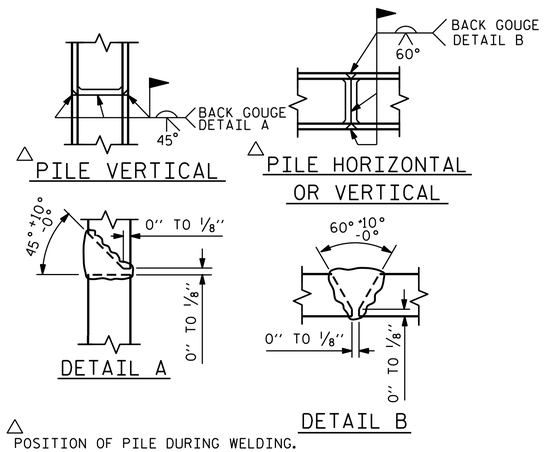

△ POSITION OF PILE DURING WELDING.

PILE SPLICE DETAILS

BAR TYPES

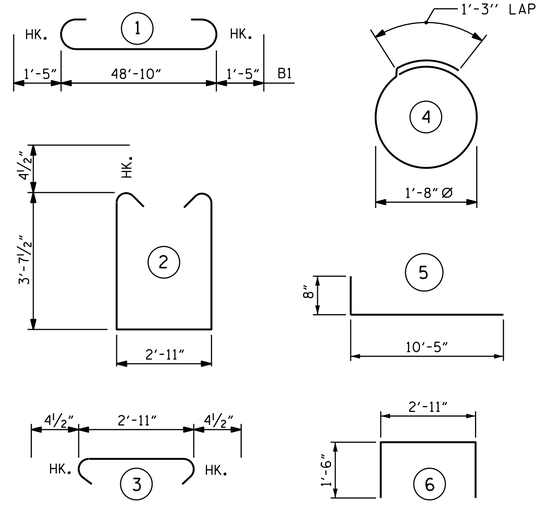

ALL BAR DIMENSIONS ARE OUT TO OUT.

BILL OF MATERIAL

BAR	NO.	SIZE	TYPE	LENGTH	WEIGHT
B1	8	#10	1	51'-8"	1779
B2	28	#4	STR	25'-9"	482
B3	13	#4	STR	2'-11"	25
B4	4	#4	STR	2'-8"	7
H1	48	#5	5	11'-1"	555
K8	8	#4	STR	3'-8"	20
S1	55	#4	2	10'-11"	401
S2	55	#4	3	3'-8"	135
S3	24	#4	4	6'-6"	104
U1	3	#4	6	5'-11"	12
V1	77	#4	STR	6'-2"	317
V2	60	#4	STR	7'-8"	307

REINFORCING STEEL = 4144 LBS

CLASS A CONCRETE

POUR #1 (CAP, COLLARS, & LOWER PART OF WINGS) = 28.3 C.Y.

POUR #2 (UPPER PART OF WINGS) = 4.0 C.Y.

TOTAL = 32.3 C.Y.

HP 12 X 53 STEEL PILES

No. 6 LIN FT. 360

PILE REDRIVES EA. 3

PILE DRIVING EQUIPMENT SETUP FOR HP 12 X 53 STEEL PILES NO. 6

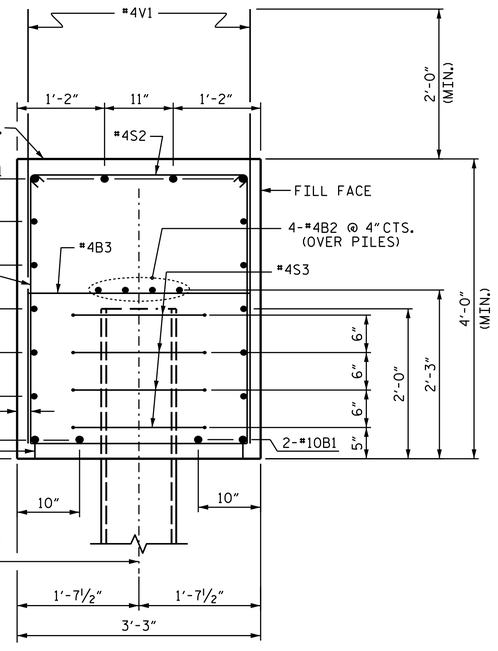

SECTION A-A

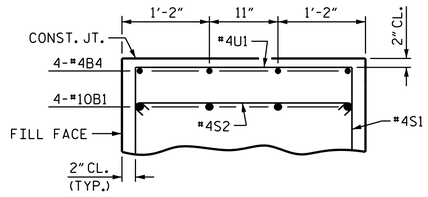

PARTIAL SECTION B-B

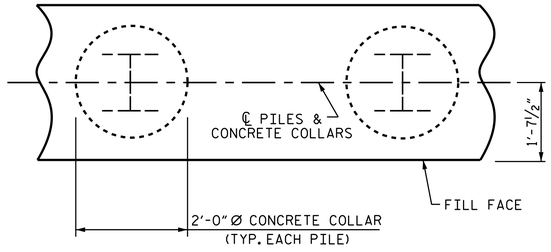

PLAN

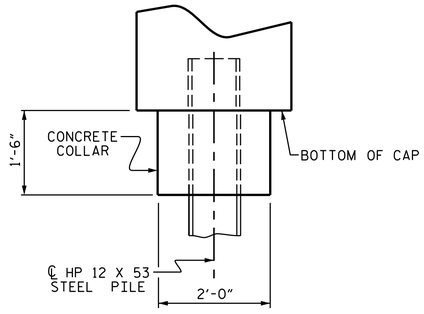

ELEVATION

CORROSION PROTECTION FOR STEEL PILES DETAIL

PROJECT NO. B-4635

SAMPSON COUNTY

STATION: 19+80.60 -L-

SHEET 3 OF 3

STATE OF NORTH CAROLINA
DEPARTMENT OF TRANSPORTATION
RALEIGH

SUBSTRUCTURE

INTEGRAL END BENT 1

NORTH CAROLINA PROFESSIONAL SEAL 26445 ENGINEER P. KOREY NEWTON

Docusigned by: P. Korey Newton 12/11/2019

DRAWN BY : M.K. BEARD DATE : 03/19
CHECKED BY : W.C. SMITH DATE : 07/19
DESIGN ENGINEER OF RECORD: D.R. SHACKELFORD DATE : 10/19

DOCUMENT NOT CONSIDERED FINAL UNLESS ALL SIGNATURES COMPLETED

REVISIONS						SHEET NO.
NO.	BY:	DATE:	NO.	BY:	DATE:	S-21
1			3			TOTAL SHEETS
2			4			30

11-DEC-2019 10:58
H:\Structures\Plans\B4635_SMU_EB_810009.dgn
pknewton

NOTES

STIRRUPS IN CAP MAY BE SHIFTED AS NECESSARY TO CLEAR ANCHOR BOLTS.

★ INVERT ALTERNATE STIRRUPS.

FOR ADDITIONAL REINFORCING STEEL IN PP 18 x 0.50 GALVANIZED STEEL PILES, SEE SHEET 3 OF 3.

GALVANIZE THE TOP OF EACH INTERIOR BENT PILE A MINIMUM OF 40 FEET. GALVANIZE IN ACCORDANCE WITH SECTION 1076 OF THE STANDARD SPECIFICATIONS.

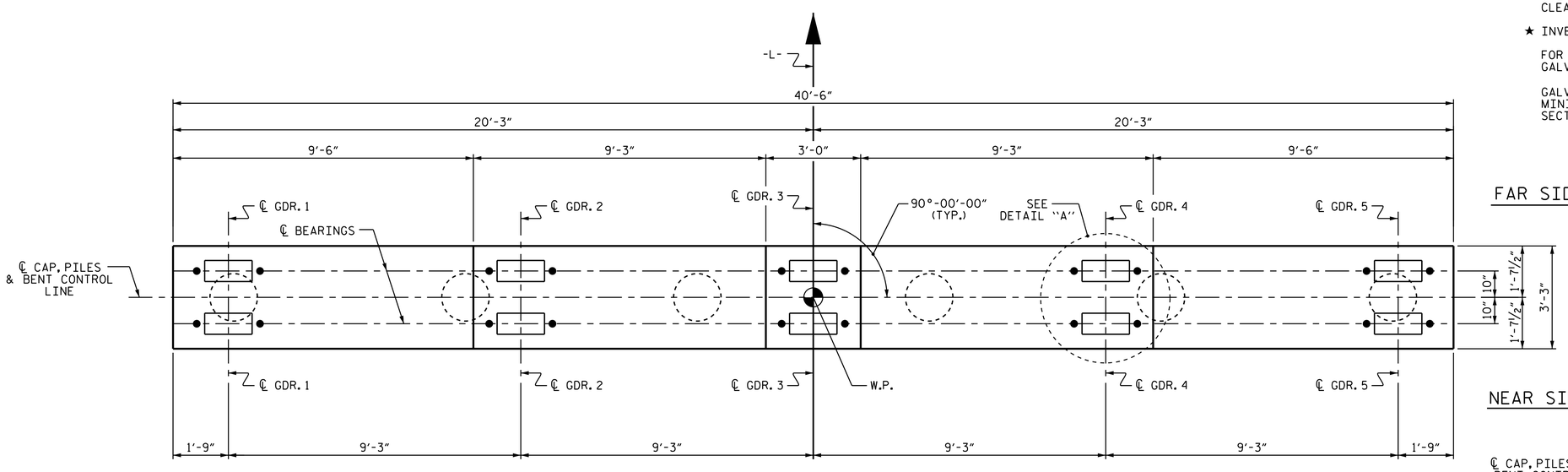

PLAN

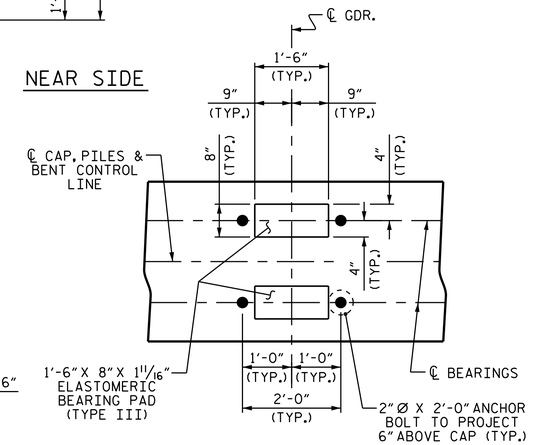

DETAIL "A"
(TYP. EA. GDR.)

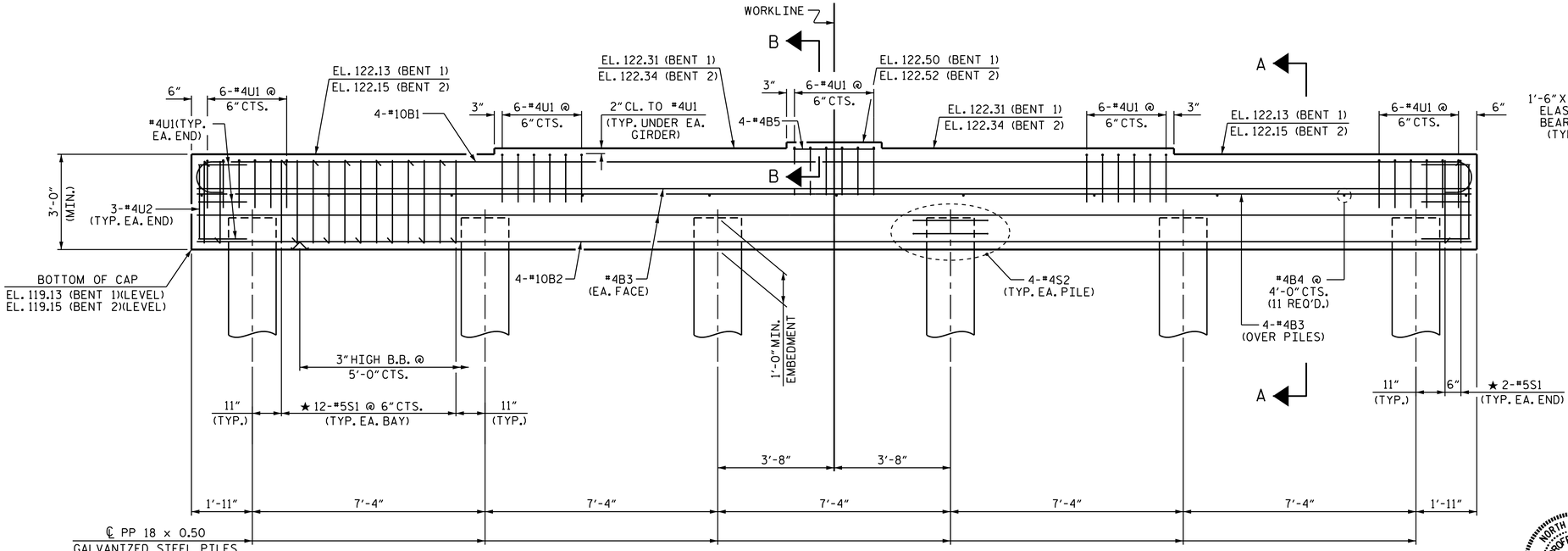

ELEVATION
(FOR SECTION A-A & B-B, SEE SHEET 2 OF 3)

PROJECT NO. B-4635
SAMPSON COUNTY
STATION: 19+80.60 -L-

SHEET 1 OF 3

STATE OF NORTH CAROLINA
DEPARTMENT OF TRANSPORTATION
RALEIGH

SUBSTRUCTURE

BENTS 1 & 2

NORTH CAROLINA PROFESSIONAL SEAL 26445 ENGINEER P. KOREY NEWTON

DocuSigned by: P. Korey Newton
4FFE3BD143184D7...
12/11/2019

DOCUMENT NOT CONSIDERED FINAL UNLESS ALL SIGNATURES COMPLETED

REVISIONS						SHEET NO.
NO.	BY:	DATE:	NO.	BY:	DATE:	S-22
1			3			TOTAL SHEETS
2			4			30

DRAWN BY : M.K. BEARD DATE : 03/19
CHECKED BY : W.C. SMITH DATE : 07/19
DESIGN ENGINEER OF RECORD: D.R. SHACKELFORD DATE : 10/19

11-DEC-2019 10:58
H:\Structures\Plans\B4635_SMU_ B*_810009.dgn
pknewton

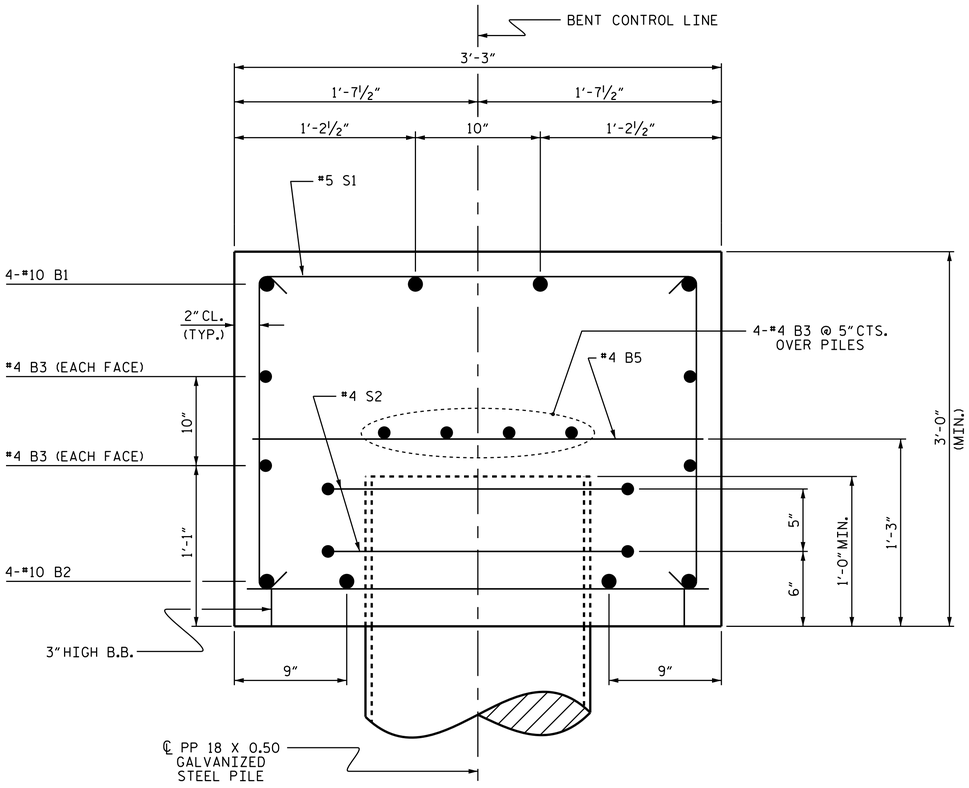

SECTION A-A

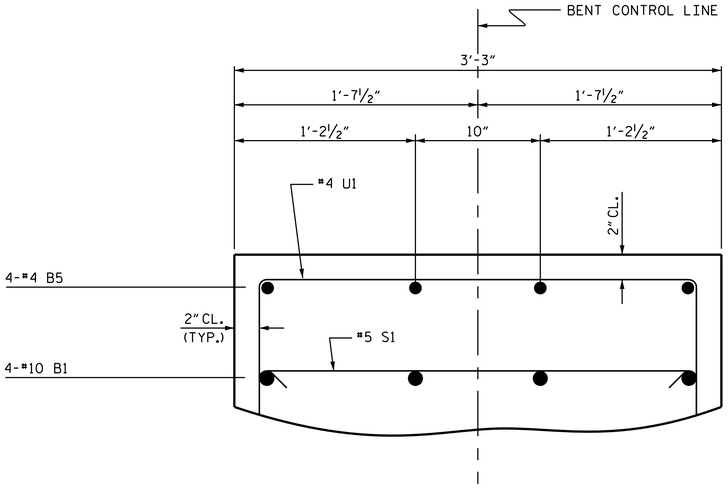

SECTION B-B

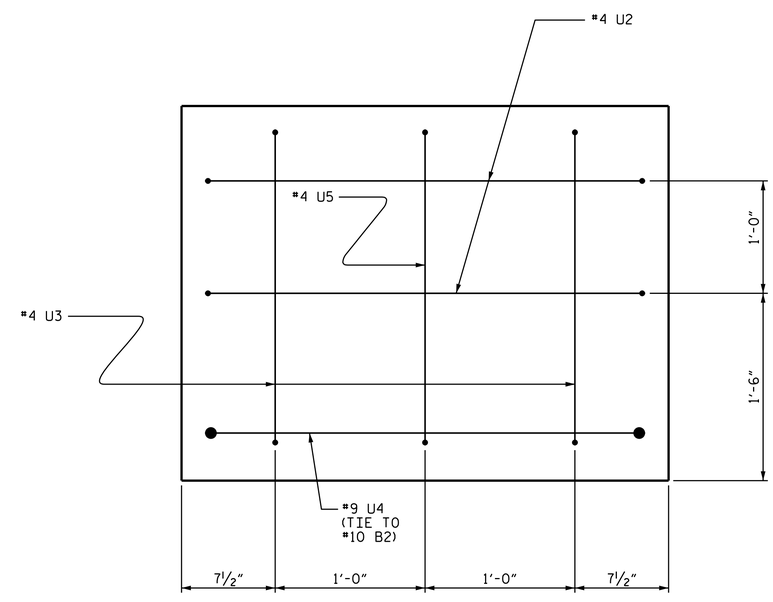

END OF CAP VIEW

(TYPICAL BOTH ENDS)

BAR TYPES

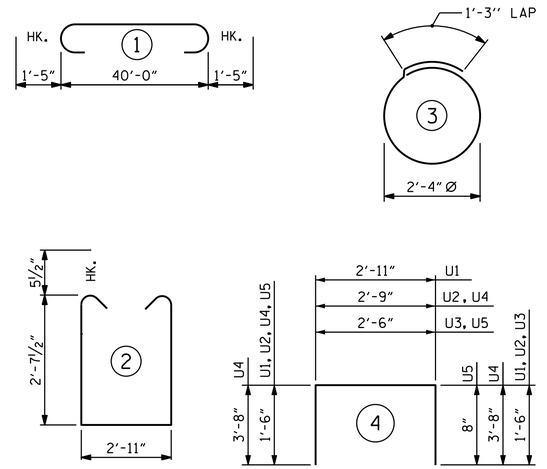

ALL BAR DIMENSIONS ARE OUT TO OUT.

BILL OF MATERIAL

FOR ONE BENT

BAR	NO.	SIZE	TYPE	LENGTH	WEIGHT
B1	4	#10	1	42'-10"	737
B2	4	#10	STR	40'-2"	691
B3	8	#4	STR	40'-0"	214
B4	11	#4	STR	2'-11"	21
B5	4	#4	STR	2'-8"	7
S1	64	#5	2	9'-1"	606
S2	12	#4	3	8'-7"	69
U1	30	#4	4	5'-11"	119
U2	6	#4	4	5'-9"	23
U3	4	#4	4	5'-6"	15
U4	2	#9	4	10'-1"	69
U5	2	#4	4	4'-8"	6

REINFORCING STEEL (FOR ONE BENT) 2577 LBS

CLASS A CONCRETE BREAKDOWN (FOR ONE BENT)

TOTAL CLASS A CONCRETE ▲ 14.8 C.Y.

PP 18 x 0.50 GALVANIZED STEEL PILES (FOR ONE BENT)

No. 6 LIN. FT. 300.0

PIPE PILE PLATES NO. 6

PILE DRIVING EQUIPMENT SETUP FOR PP 18 x 0.50 GALVANIZED STEEL PILES (FOR ONE BENT) NO. 6

PILE REDRIVES NO. 3

▲ CONCRETE DISPLACED BY THE PP 18 x 0.50 GALVANIZED STEEL PILES HAS BEEN DEDUCTED FROM THE CONCRETE QUANTITY.

PROJECT NO. B-4635

SAMPSON COUNTY

STATION: 19+80.60 -L-

SHEET 2 OF 3

STATE OF NORTH CAROLINA
DEPARTMENT OF TRANSPORTATION
RALEIGH

SUBSTRUCTURE

BENTS 1 & 2

NORTH CAROLINA PROFESSIONAL SEAL 26445 ENGINEER P. KOREY NEWTON

DocuSigned by: P. Korey Newton 4FFE3901431B407... 12/11/2019

DOCUMENT NOT CONSIDERED FINAL UNLESS ALL SIGNATURES COMPLETED

REVISIONS						SHEET NO.
NO.	BY:	DATE:	NO.	BY:	DATE:	S-23
1			3			TOTAL SHEETS
2			4			30

DRAWN BY : M.K. BEARD DATE : 03/19
CHECKED BY : W.C. SMITH DATE : 07/19
DESIGN ENGINEER OF RECORD: D.R. SHACKELFORD DATE : 10/19

11-DEC-2019 10:58
H:\Structures\Plans\B4635_SMU_ B*_810009.dgn
pknewton

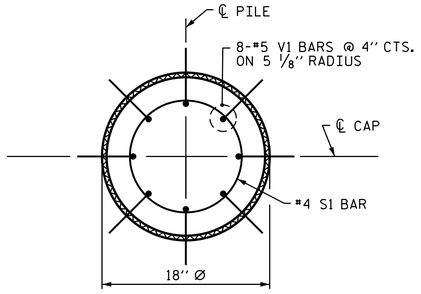

PLAN

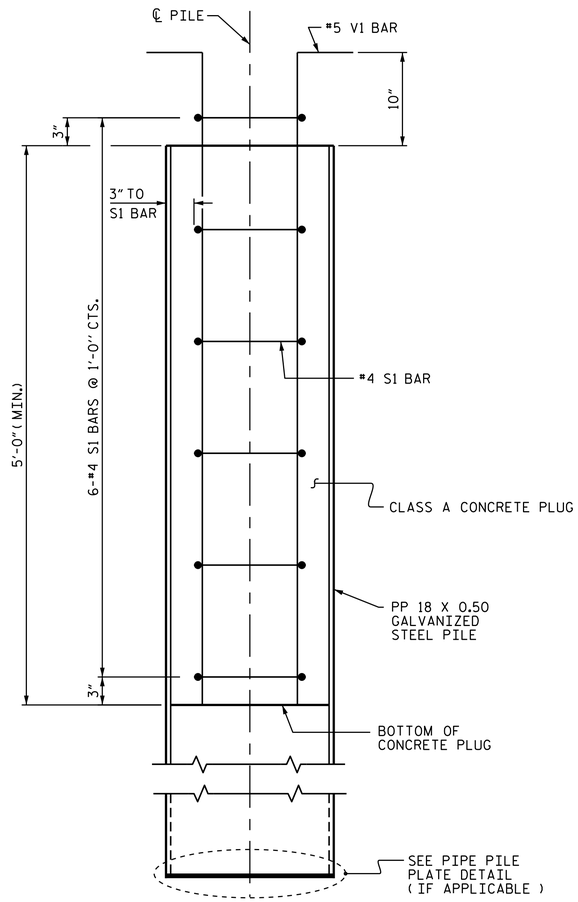

ELEVATION

PP 18 X 0.50 GALVANIZED STEEL PILE

(OPEN OR CLOSED END)

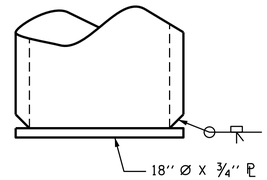

PIPE PILE PLATE DETAIL
(IF APPLICABLE)

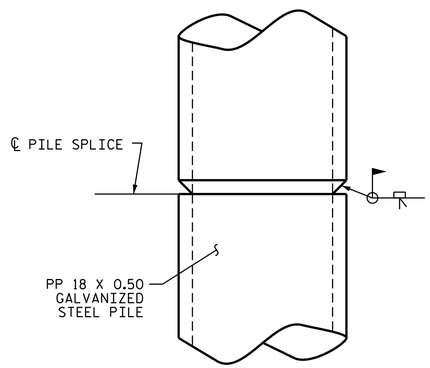

PIPE PILE SPLICE DETAIL

NOTES

PIPE PILES SHALL BE IN ACCORDANCE WITH SECTION 1084 OF THE STANDARD SPECIFICATIONS.

GALVANIZE STEEL PIPE PILES IN ACCORDANCE WITH SECTION 1076 OF THE STANDARD SPECIFICATIONS UNLESS METALLIZING IS REQUIRED. GALVANIZING OR METALLIZING PIPE PILE PLATES IS NOT REQUIRED.

PIPE PILE PLATES, IF REQUIRED, SHALL BE IN ACCORDANCE WITH SECTION 450 OF THE STANDARD SPECIFICATIONS.

REMOVE AND REPLACE OR REPAIR TO THE SATISFACTION OF THE ENGINEER PILES THAT ARE DAMAGED, DEFORMED OR COLLAPSED DURING INSTALLATION OR DRIVING.

PILE SPLICES SHALL BE IN ACCORDANCE WITH THE STANDARD SPECIFICATIONS AND AWS D1.1.

FOR CLOSED END PIPE PILES, REMOVE ALL SOIL AND WATER FROM INSIDE THE PILES JUST PRIOR TO PLACING REINFORCING STEEL AND CONCRETE FOR THE CONCRETE PLUG.

FOR OPEN END PIPE PILES, REMOVE ENOUGH SOIL AND WATER FROM INSIDE THE PILES TO CONSTRUCT THE CONCRETE PLUG WITHOUT FOULING THE CONCRETE.

FORM THE CONCRETE PLUG SUCH THAT THE REINFORCING STEEL OR CONCRETE DOES NOT MOVE AND THE CLEARANCE FROM THE REINFORCING STEEL TO THE INSIDE OF THE PILE IS MAINTAINED AFTER CONCRETE PLACEMENT. DO NOT PLACE CONCRETE IN THE BENT CAP UNTIL THE CONCRETE PLUG HAS ATTAINED A MINIMUM COMPRESSIVE STRENGTH OF 1500 PSI.

THE REINFORCING STEEL, CLASS A CONCRETE, AND GALVANIZING ARE CONSIDERED INCIDENTAL TO THE CONTRACT UNIT PRICE BID PER LINEAR FOOT FOR PP 18 X 0.50 GALVANIZED STEEL PILES.

BILL OF MATERIAL FOR ONE PP 18 X 0.50 GALVANIZED STEEL PILE

BAR	NO.	SIZE	TYPE	LENGTH	WEIGHT
S1	6	#4	1	4'-5''	18
V1	8	#5	2	6'-8''	56
REINFORCING STEEL =					74 LBS.

CLASS A CONCRETE

5'-0'' MINIMUM PLUG 0.3 CY

BAR TYPES

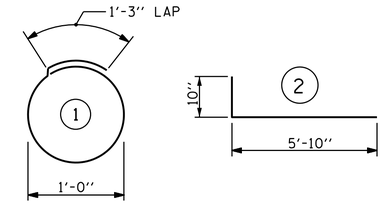

ALL BAR DIMENSIONS ARE OUT TO OUT.

PROJECT NO. B-4635

SAMPSON COUNTY

STATION: 19+80.60 -L-

SHEET 3 OF 3

STATE OF NORTH CAROLINA
DEPARTMENT OF TRANSPORTATION
RALEIGH

STANDARD

18'' STEEL PIPE PILE

NORTH CAROLINA PROFESSIONAL SEAL 26445 ENGINEER P. KOREY NEWTON

DocuSigned by: P. Korey Newton 4FFE38D1431B407... 12/11/2019

DOCUMENT NOT CONSIDERED FINAL UNLESS ALL SIGNATURES COMPLETED

REVISIONS					
NO.	BY:	DATE:	NO.	BY:	DATE:
1			3		
2			4		

SHEET NO. S-24

TOTAL SHEETS 30

STD. NO. SPP3

ASSEMBLED BY : M.K. BEARD		DATE : 03/19	
CHECKED BY : W.C. SMITH		DATE : 07/19	
DRAWN BY : RWW 1/01	REV. 5/1/06R		MAA/KMM
CHECKED BY : LES 1/01	REV. 10/1/11		MAA/GM
	REV. 12/17		MAA/THC

11-DEC-2019 10:58
H:\Structures\Plans\B4635_SMU_ B*_810009.dgn
pknewton

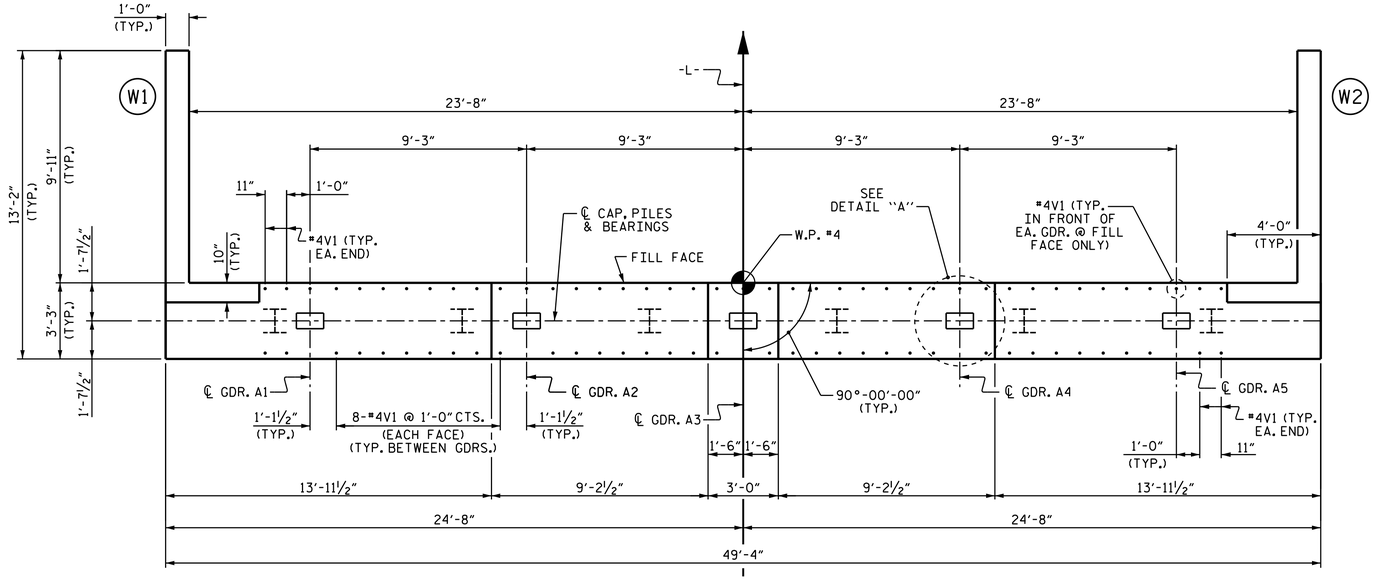

PLAN

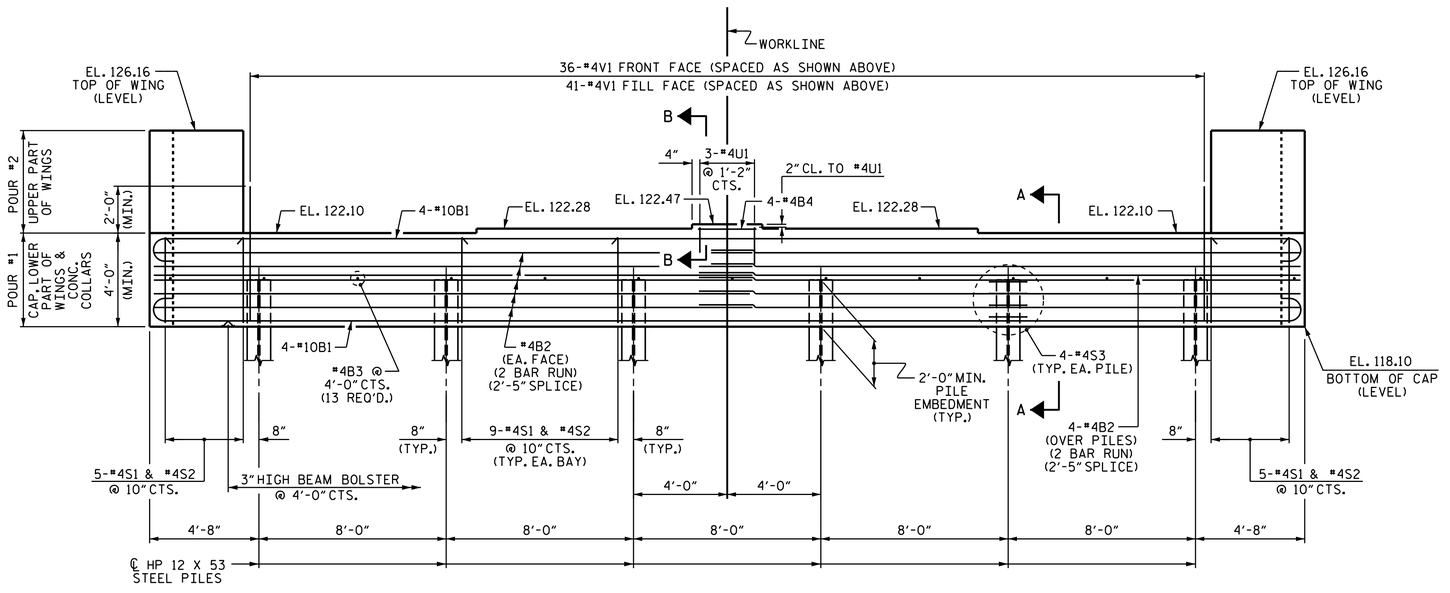

ELEVATION

WINGS NOT SHOWN FOR CLARITY.
FOR SECTION A-A & B-B, SEE SHEET 3 OF 3.
CONCRETE COLLARS FOR STEEL PILES NOT SHOWN IN PLAN & ELEVATION VIEWS FOR CLARITY.
SEE "CORROSION PROTECTION FOR STEEL PILES DETAIL", SHEET 3 OF 3.

NOTES

STIRRUPS IN CAP MAY BE SHIFTED AS NECESSARY TO CLEAR #4V1 BARS.

THE TOP SURFACE OF THE END BENT CAP, EXCEPT THE BEARING AREA, SHALL BE RAKED TO A DEPTH OF 1/4".

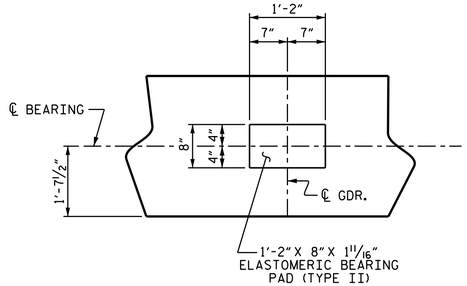

DETAIL "A"
(TYP. EA. GDR.)

PROJECT NO. B-4635
SAMPSON COUNTY
STATION: 19+80.60 -L-

SHEET 1 OF 3

STATE OF NORTH CAROLINA
DEPARTMENT OF TRANSPORTATION
RALEIGH

SUBSTRUCTURE

INTEGRAL END BENT 2

NORTH CAROLINA PROFESSIONAL SEAL 26445 ENGINEER KOREY NEWTON

DocuSigned by: P. Korey Newton 4FFB39D1421B477... 2/11/2020

DOCUMENT NOT CONSIDERED FINAL UNLESS ALL SIGNATURES COMPLETED

REVISIONS						SHEET NO.
NO.	BY:	DATE:	NO.	BY:	DATE:	S-25
1			3			TOTAL SHEETS
2			4			30

DRAWN BY :	M.K. BEARD	DATE : 03/19
CHECKED BY :	W.C. SMITH	DATE : 07/19
DESIGN ENGINEER OF RECORD:	D.R. SHACKELFORD	DATE : 10/19

11-FEB-2020 16:04
H:\Structures\Plans\B4635_SMU_ EB_810009.dgn
pknewton

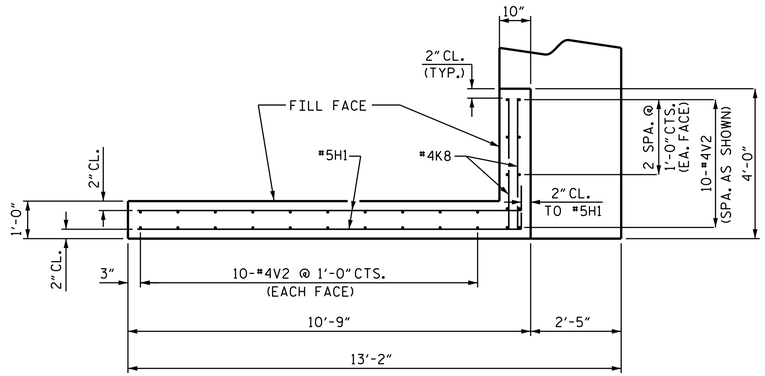

PLAN OF WING W1

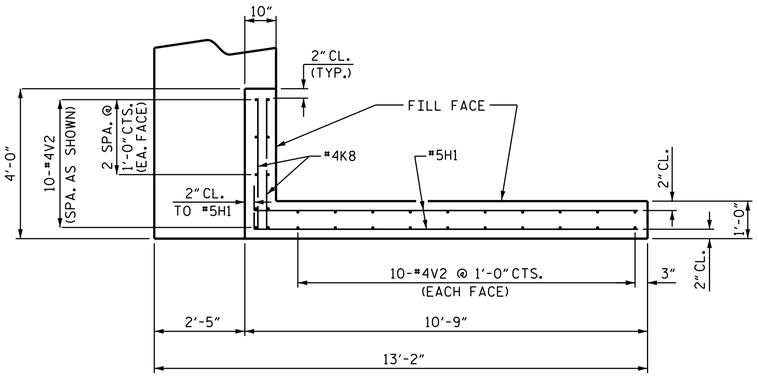

PLAN OF WING W2

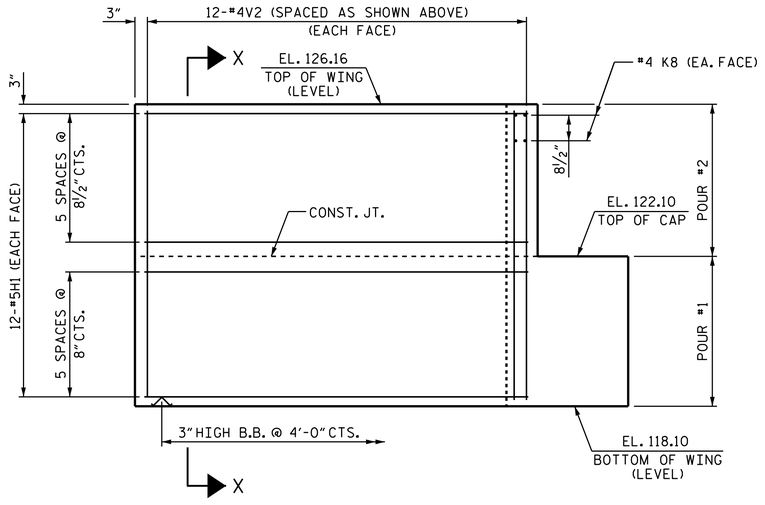

ELEVATON OF WING W1

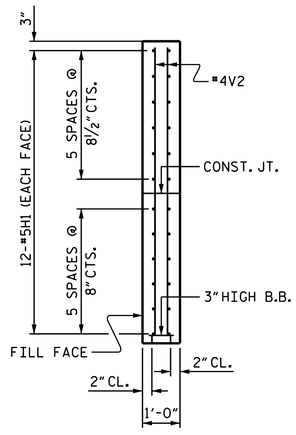

SECTION X-X

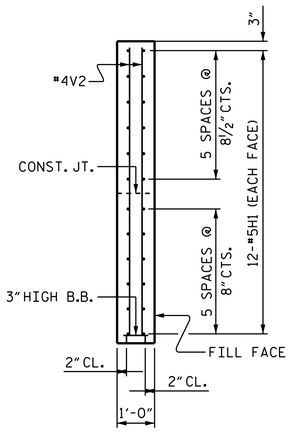

SECTION Y-Y

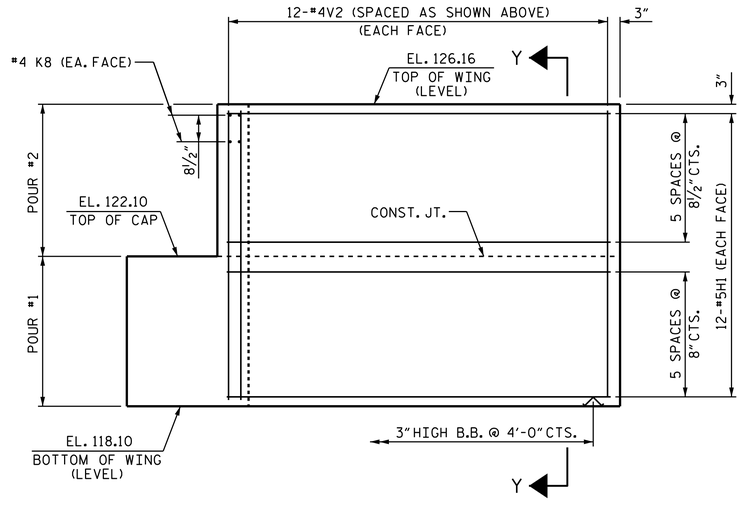

ELEVATON OF WING W2

PROJECT NO. B-4635

SAMPSON COUNTY

STATION: 19+80.60 -L-

SHEET 2 OF 3

STATE OF NORTH CAROLINA
DEPARTMENT OF TRANSPORTATION
RALEIGH

SUBSTRUCTURE

INTEGRAL END BENT 2

NORTH CAROLINA PROFESSIONAL SEAL 26445 ENGINEER P. KOREY NEWTON

DocuSigned by: P. Korey Newton 4FFE3D014318407...
12/11/2019

DRAWN BY : M.K. BEARD DATE : 03/19
CHECKED BY : W.C. SMITH DATE : 07/19
DESIGN ENGINEER OF RECORD: D.R. SHACKELFORD DATE : 10/19

DOCUMENT NOT CONSIDERED FINAL UNLESS ALL SIGNATURES COMPLETED

REVISIONS						SHEET NO.
NO.	BY:	DATE:	NO.	BY:	DATE:	S-26
1			3			TOTAL SHEETS
2			4			30

11-DEC-2019 10:58
H:\Structures\Plans\B4635_SMU_ EB_810009.dgn
pknewton

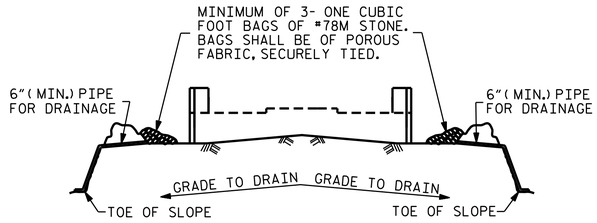

BAGGED STONE AND PIPE SHALL BE PLACED IMMEDIATELY AFTER COMPLETION OF END BENT EXCAVATION. PIPE MAY BE EITHER CONCRETE, CORRUGATED STEEL, CORRUGATED ALUMINUM ALLOY, OR CORRUGATED PLASTIC. PERFORATED PIPE WILL NOT BE ALLOWED.

BAGGED STONE SHALL REMAIN IN PLACE UNTIL THE ENGINEER DIRECTS THAT IT BE REMOVED. THE CONTRACTOR SHALL REMOVE AND DISPOSE OF SILT ACCUMULATIONS AT BAGGED STONE WHEN SO DIRECTED BY THE ENGINEER. BAGS SHALL BE REMOVED AND REPLACED WHENEVER THE ENGINEER DETERMINES THAT THEY HAVE DETERIORATED AND LOST THEIR EFFECTIVENESS.

NO SEPARATE PAYMENT WILL BE MADE FOR THIS WORK AND THE ENTIRE COST OF THIS WORK SHALL BE INCLUDED IN THE UNIT CONTRACT PRICE BID FOR THE SEVERAL PAY ITEMS.

TEMPORARY DRAINAGE AT END BENT

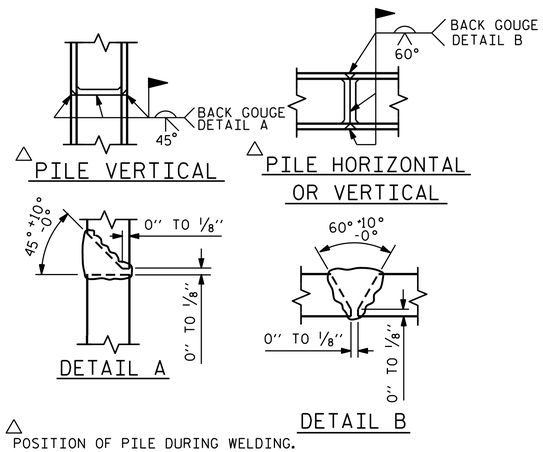

△ POSITION OF PILE DURING WELDING.

PILE SPLICE DETAILS

BAR TYPES

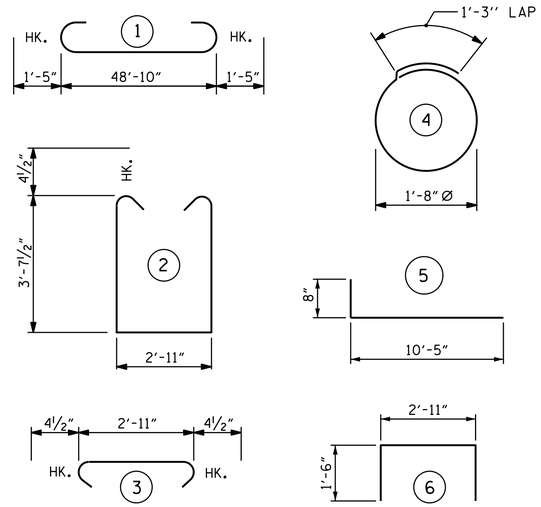

ALL BAR DIMENSIONS ARE OUT TO OUT.

BILL OF MATERIAL

BAR	NO.	SIZE	TYPE	LENGTH	WEIGHT
B1	8	#10	1	51'-8"	1779
B2	28	#4	STR	25'-9"	482
B3	13	#4	STR	2'-11"	25
B4	4	#4	STR	2'-8"	7
H1	48	#5	5	11'-1"	555
K8	8	#4	STR	3'-8"	20
S1	55	#4	2	10'-11"	401
S2	55	#4	3	3'-8"	135
S3	24	#4	4	6'-6"	104
U1	3	#4	6	5'-11"	12
V1	77	#4	STR	6'-2"	317
V2	60	#4	STR	7'-8"	307

REINFORCING STEEL = 4144 LBS

CLASS A CONCRETE

POUR #1 (CAP, COLLARS, & LOWER PART OF WINGS) = 28.3 C.Y.

POUR #2 (UPPER PART OF WINGS) = 4.0 C.Y.

TOTAL = 32.3 C.Y.

HP 12 X 53 STEEL PILES

No. 6 LIN FT. 360

PILE REDRIVES EA. 3

PILE DRIVING EQUIPMENT SETUP FOR HP 12 X 53 STEEL PILES NO. 6

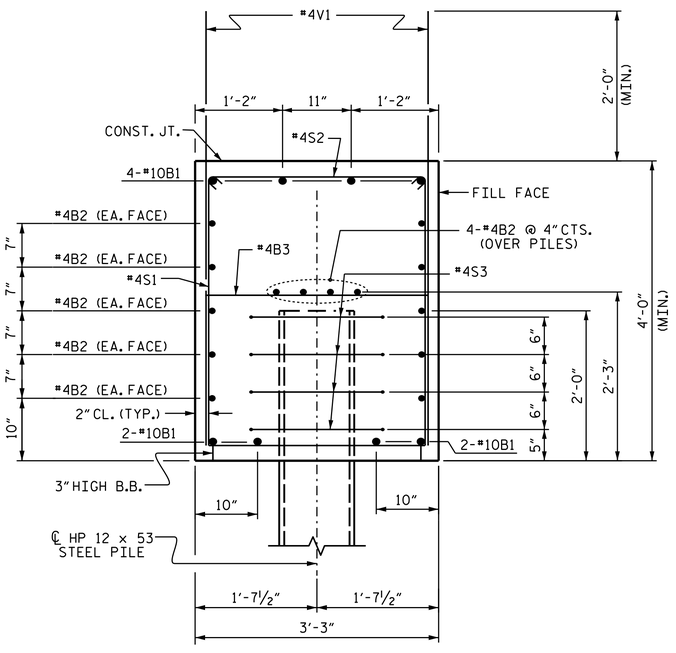

SECTION A-A

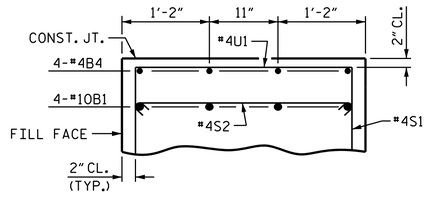

PARTIAL SECTION B-B

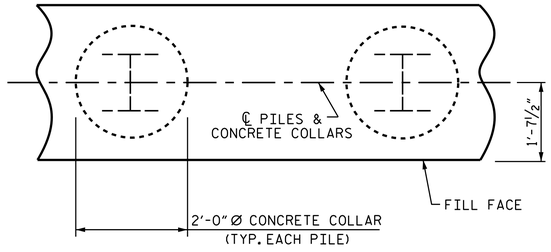

PLAN

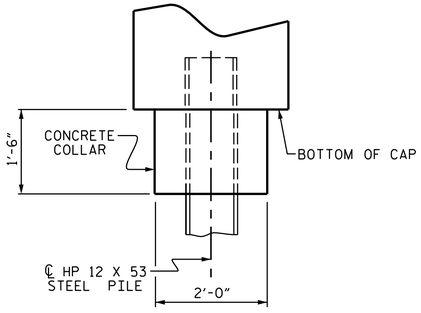

ELEVATION

CORROSION PROTECTION FOR STEEL PILES DETAIL

PROJECT NO. B-4635

SAMPSON COUNTY

STATION: 19+80.60 -L-

SHEET 3 OF 3

STATE OF NORTH CAROLINA
DEPARTMENT OF TRANSPORTATION
RALEIGH

SUBSTRUCTURE

INTEGRAL END BENT 2

NORTH CAROLINA PROFESSIONAL SEAL 26445 ENGINEER P. KOREY NEWTON

Docusigned by: P. Korey Newton 12/11/2019

DOCUMENT NOT CONSIDERED FINAL UNLESS ALL SIGNATURES COMPLETED

REVISIONS					
NO.	BY:	DATE:	NO.	BY:	DATE:
1			3		
2			4		

SHEET NO. S-27

TOTAL SHEETS 30

DRAWN BY : M.K. BEARD DATE : 03/19
CHECKED BY : W.C. SMITH DATE : 07/19
DESIGN ENGINEER OF RECORD: D.R. SHACKELFORD DATE : 10/19

11-DEC-2019 10:58
H:\Structures\Plans\B4635_SMU_EB_810009.dgn
pknewton

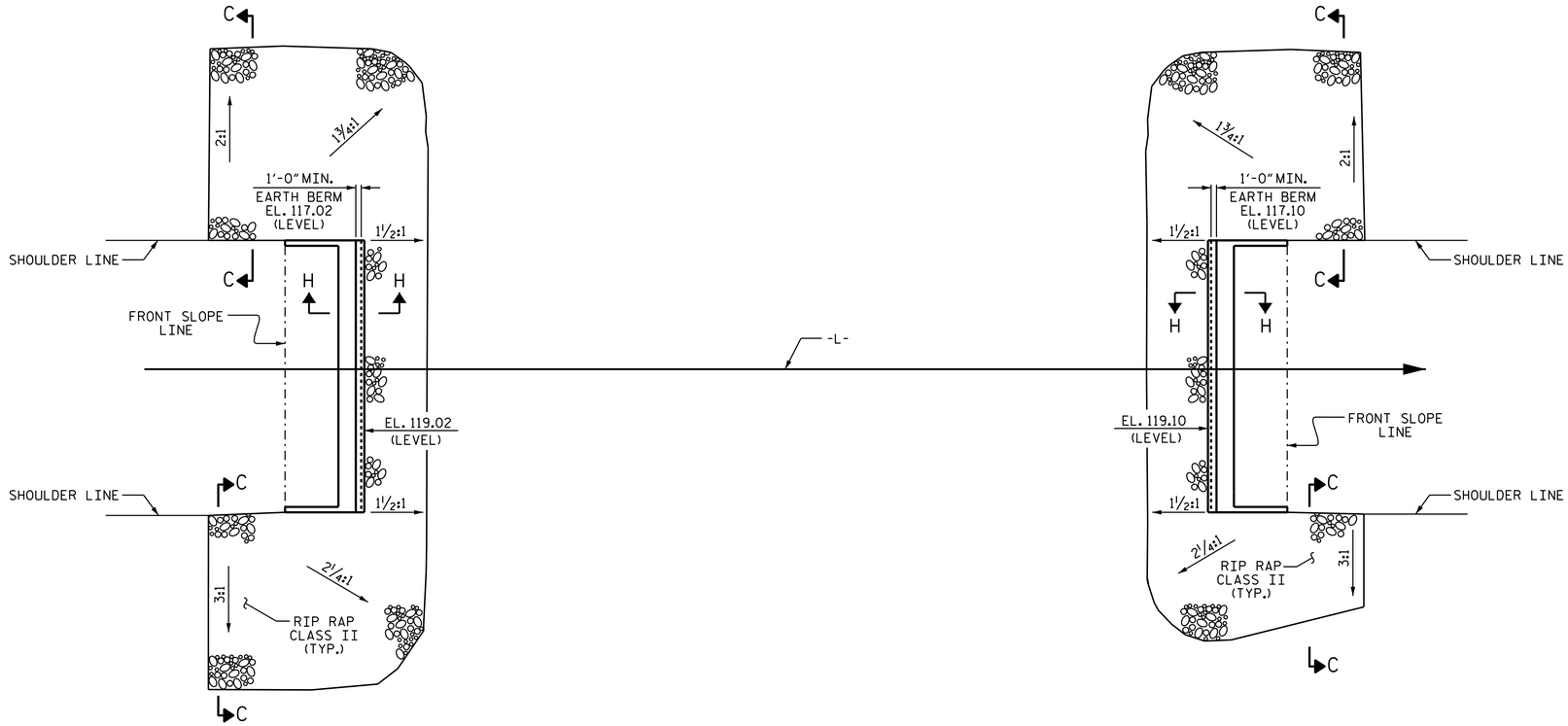

INTEGRAL
END BENT 1

INTEGRAL
END BENT 2

PLAN

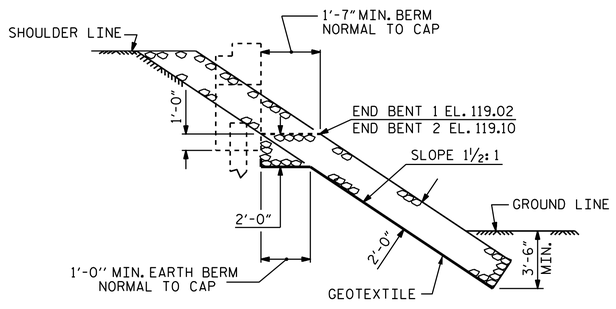

SECTION H-H

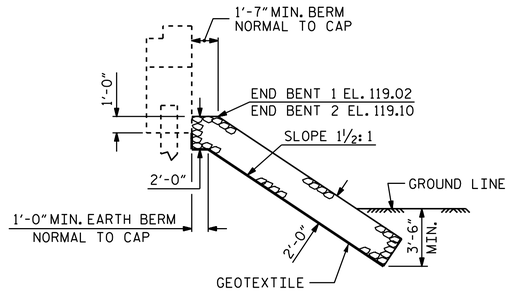

℄ SECTION
BERM RIP RAPPED

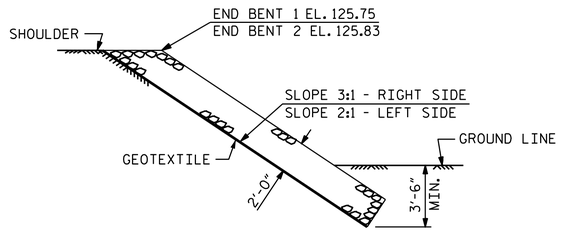

SECTION C-C

ESTIMATED QUANTITIES

BRIDGE @ STA. 19+80.60 -L-	RIP RAP CLASS II (2'-0" THICK)	GEOTEXTILE FOR DRAINAGE
	TONS	SQUARE YARDS
END BENT 1	325	360
END BENT 2	320	355

PROJECT NO. B-4635

SAMPSON COUNTY

STATION: 19+80.60 -L-

STATE OF NORTH CAROLINA
DEPARTMENT OF TRANSPORTATION
RALEIGH

RIP RAP DETAILS

NORTH CAROLINA PROFESSIONAL SEAL 26445 ENGINEER P. KOREY NEWTON

DocuSigned by: P. Korey Newton 12/11/2019

DOCUMENT NOT CONSIDERED FINAL UNLESS ALL SIGNATURES COMPLETED

REVISIONS						SHEET NO.
NO.	BY:	DATE:	NO.	BY:	DATE:	S-28
1			3			TOTAL SHEETS
2			4			30

ASSEMBLED BY : M.K. BEARD	DATE : 02/19
CHECKED BY : W.C. SMITH	DATE : 08/19
DRAWN BY : REK 1/84	REV. 10/1/11 MAA/GM
CHECKED BY : RDU 1/84	REV. 12/21/11 MAA/GM
	REV. 12/17 MAA/THC

11-DEC-2019 10:58
H:\Structures\Plans\B4635_SMU_ RR_810009.dgn
pknewton

STD. NO. RR1 (Sht 2)

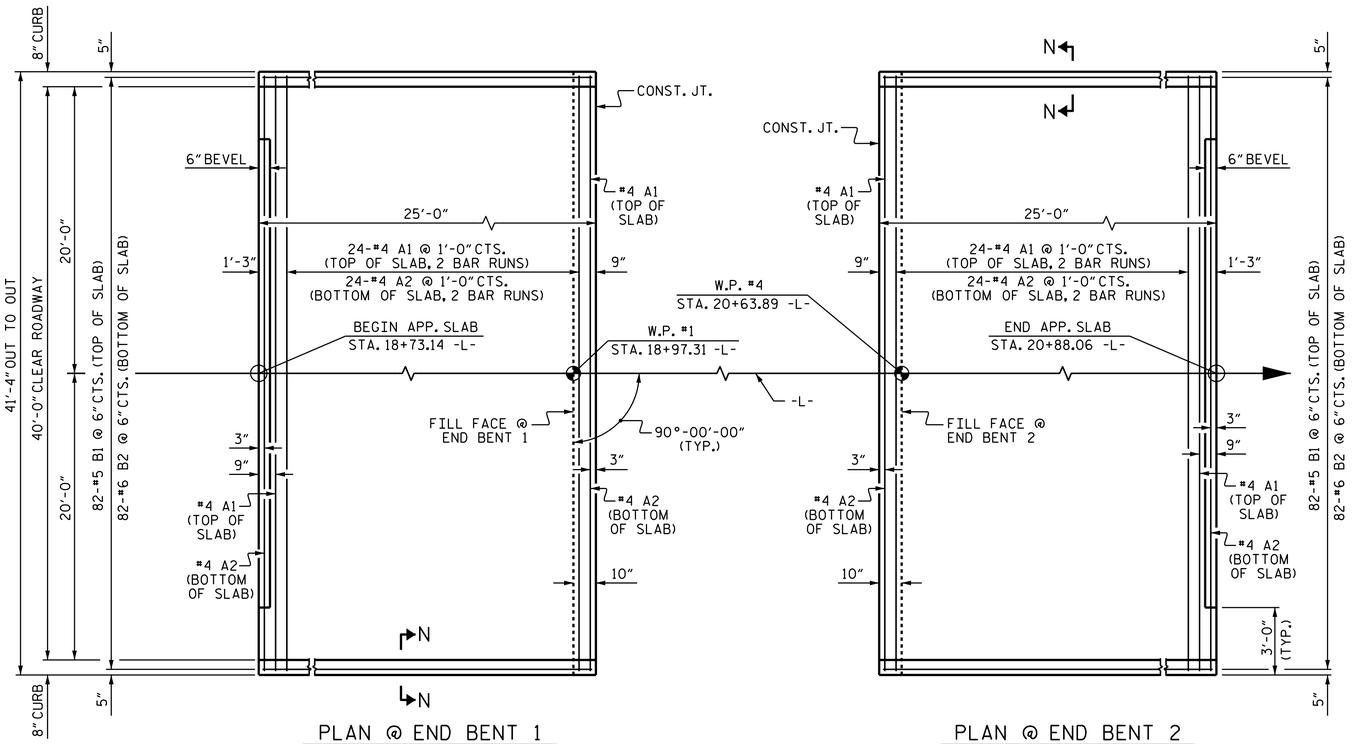

DIMENSIONS SHOWN ARE TYPICAL FOR BOTH APPROACH SLABS

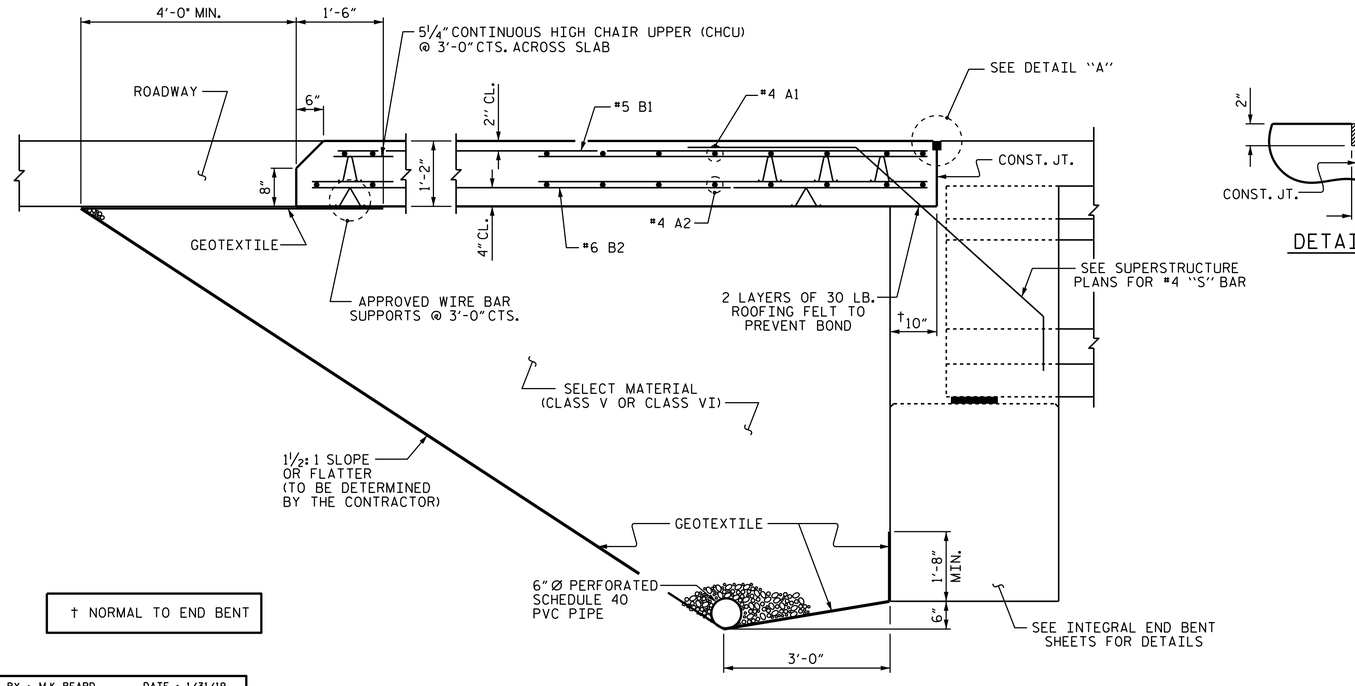

† NORMAL TO END BENT

SECTION THRU SLAB

(TYPE I - STANDARD APPROACH FILL)

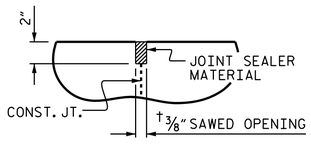

DETAIL "A"

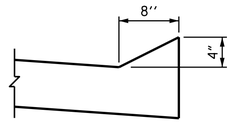

SECTION N-N

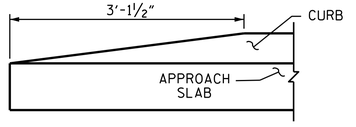

END OF CURB WITHOUT SHOULDER BERM GUTTER

NOTES

APPROACH SLAB SHALL NOT BE CONSTRUCTED PRIOR TO COMPLETION OF THE BRIDGE DECK.

FOR BRIDGE APPROACH FILL INCLUDING GEOTEXTILE, 6" Ø DRAINAGE PIPE, AND SELECT MATERIAL, SEE ROADWAY PLANS.

GEOTEXTILE SHALL BE TYPE 1 IN ACCORDANCE WITH THE STANDARD SPECIFICATIONS SECTION 1056.

SELECT MATERIAL BACKFILL (CLASS V OR CLASS VI) SHALL BE IN ACCORDANCE WITH STANDARD SPECIFICATIONS SECTION 1016.

SELECT MATERIAL BACKFILL IS TO BE CONTINUOUS ALONG FILL FACE OF BACKWALL FROM OUTSIDE EDGE TO OUTSIDE EDGE OF APPROACH SLAB.

FOR THE 6" Ø DRAINAGE PIPE OUTLET(S), SEE ROADWAY STANDARD DRAWINGS.

AREA BETWEEN THE WINGWALL AND APPROACH SLAB SHALL BE GRADED TO DRAIN THE WATER AWAY FROM THE FILL FACE OF THE BRIDGE AND SHALL BE PAVED. SEE ROADWAY PLANS.

THE JOINT OPENING AT THE APPROACH SLAB/DECK INTERFACE SHALL BE SAWED NO MORE THAN 12 HOURS AFTER THE APPROACH SLAB IS CAST. THE JOINT SHALL BE CLEANED OF ALL DEBRIS BEFORE THE SEALANT IS APPLIED. THE JOINT SEALER MATERIAL SHALL CONFORM TO THE REQUIREMENTS OF SECTION 1028-3 OF THE STANDARD SPECIFICATIONS.

AT THE CONTRACTORS OPTION, "TYPE A - ALTERNATE APPROACH FILL" IN LIEU OF "TYPE I - STANDARD APPROACH FILL" MAY BE CONSTRUCTED AT NO ADDITIONAL COST TO THE DEPARTMENT. SEE SHEET 2 OF 2 FOR DETAILS AND NOTES.

BILL OF MATERIAL

FOR ONE APPROACH SLAB (2 REQ'D)

BAR	NO.	SIZE	TYPE	LENGTH	WEIGHT
✱ A1	52	#4	STR	21'-6"	747
A2	52	#4	STR	21'-6"	747
✱ B1	82	#5	STR	24'-2"	2067
B2	82	#6	STR	24'-8"	3038
REINFORCING STEEL				LBS.	3785
✱ EPOXY COATED REINFORCING STEEL				LBS.	2814
CLASS AA CONCRETE				C. Y.	45.0

SPLICE LENGTHS

BAR SIZE	EPOXY COATED	UNCOATED
#4	1'-11"	1'-7"
#5	2'-5"	2'-0"
#6	3'-7"	2'-5"

PROJECT NO. B-4635

SAMPSON COUNTY

STATION: 19+80.60 -L-

SHEET 1 OF 2

NORTH CAROLINA PROFESSIONAL SEAL 26445 ENGINEER P. KOREY NEWTON

Docusigned by: P. Korey Newton 4FF53B01431B407...

12/11/2019

DOCUMENT NOT CONSIDERED FINAL UNLESS ALL SIGNATURES COMPLETED

STATE OF NORTH CAROLINA
DEPARTMENT OF TRANSPORTATION
RALEIGH

STANDARD

BRIDGE APPROACH SLAB FOR INTEGRAL ABUTMENT WITH FLEXIBLE PAVEMENT

REVISIONS						SHEET NO.
NO.	BY:	DATE:	NO.	BY:	DATE:	S-29
1			3			TOTAL SHEETS
2			4			30

ASSEMBLED BY : M.K. BEARD	DATE : 1/31/19
CHECKED BY : W.C. SMITH	DATE : 08/19
DRAWN BY : TLA 10/05	REV. 12/21/11 MAA/GM
CHECKED BY : GM 5/06	REV. 6/13 MAA/GM
	REV. 12/17 MAA/THC

11-DEC-2019 10:58
H:\Structures\Plans\B4635_SMU_ AS_810009.dgn
pknewton

STD. NO. BAS5 (SHT 1)

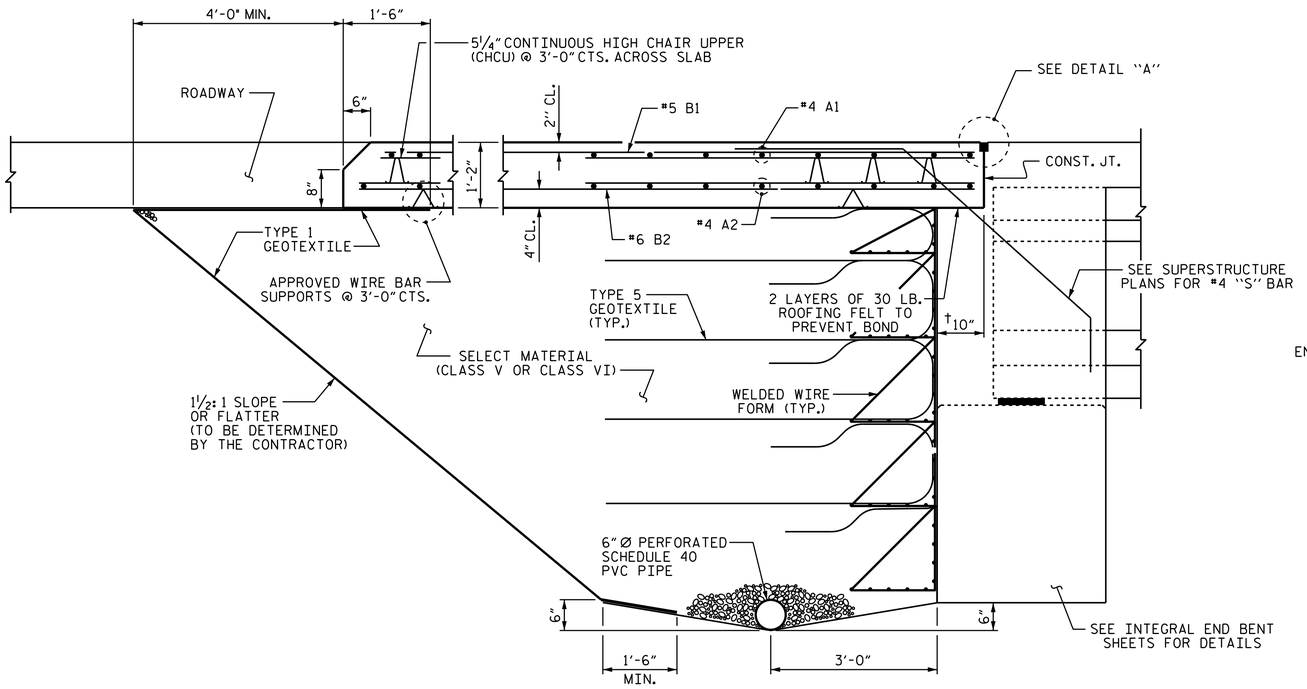

SECTION THRU SLAB

(TYPE A - ALTERNATE APPROACH FILL)

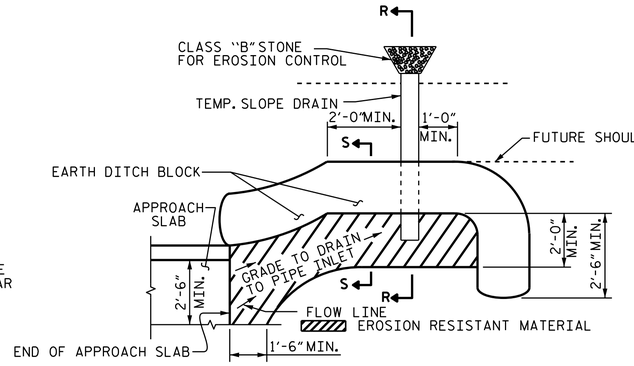

NOTE: IMMEDIATELY AFTER THE CONSTRUCTION OF THE APPROACH SLAB, THE CONTRACTOR SHALL PROVIDE TEMPORARY BERM AND SLOPE DRAIN. CONTRACTOR SHALL GRADE TO PIPE INLET AND PROVIDE EROSION RESISTANT MATERIAL AS SHOWN. THE EROSION RESISTANT MATERIAL SHALL BE EITHER 1) ASPHALT PLANT MIX, TYPE 1 OR TYPE 2, MIN. 2" DEPTH, 2) EROSION CONTROL MAT, OR 3) CONCRETE, AS DIRECTED BY THE ENGINEER. THE SLOPE DRAIN SHALL CONSIST OF A NON-PERFORATED TEMPORARY DRAINAGE PIPE, 12 INCHES IN DIAMETER.

PLAN VIEW

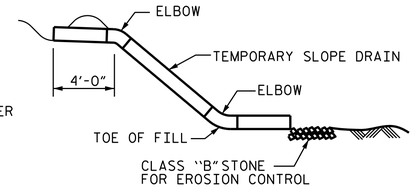

SECTION R-R

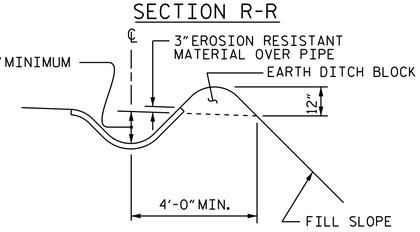

SECTION S-S

TEMPORARY BERM AND SLOPE DRAIN DETAILS

(TO BE USED WHEN SHOULDER BERM GUTTER IS REQUIRED)

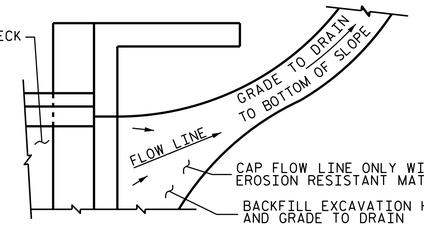

NOTE: IF THE APPROACH SLAB IS NOT CONSTRUCTED IMMEDIATELY AFTER THE BACKFILLING OF THE END BENT EXCAVATION, GRADE TO DRAIN TO THE BOTTOM OF THE SLOPE AND PROVIDE EROSION RESISTANT MATERIAL, SUCH AS FIBERGLASS ROVING OR AS DIRECTED BY THE ENGINEER TO PREVENT SOIL EROSION AND TO PROTECT THE AREA ADJACENT TO THE STRUCTURE. THE CONTRACTOR WILL BE REQUIRED TO REMOVE THESE MATERIALS PRIOR TO CONSTRUCTION OF THE APPROACH SLAB.

TEMPORARY DRAINAGE DETAIL

PROJECT NO. B-4635

SAMPSON COUNTY

STATION: 19+80.60 -L-

SHEET 2 OF 2

STATE OF NORTH CAROLINA
DEPARTMENT OF TRANSPORTATION
RALEIGH

STANDARD

BRIDGE APPROACH SLAB DETAILS

NORTH CAROLINA PROFESSIONAL SEAL 26445 ENGINEER P. KOREY NEWTON

DocuSigned by: P. Korey Newton 4FFE38D1421B407... 12/11/2019

DOCUMENT NOT CONSIDERED FINAL UNLESS ALL SIGNATURES COMPLETED

REVISIONS						SHEET NO.
NO.	BY:	DATE:	NO.	BY:	DATE:	S-30
1			3			TOTAL SHEETS
2			4			30

ASSEMBLED BY : M.K. BEARD	DATE : 1/31/19
CHECKED BY : W.C. SMITH	DATE : 08/19
DRAWN BY : TLA 10/05	REV. 12/21/11 MAA/GM
CHECKED BY : GM 5/06	REV. 6/13 MAA/GM
	REV. 12/17 MAA/THC

11-DEC-2019 10:58
H:\Structures\Plans\B4635_SMU_ AS_810009.dgn
pknewton

STD. NO. BAS5 (SHT 1)

STANDARD NOTES

DESIGN DATA:

SPECIFICATIONS	A.A.S.H.T.O. (CURRENT)
LIVE LOAD	SEE PLANS
IMPACT ALLOWANCE	SEE A.A.S.H.T.O.
STRESS IN EXTREME FIBER OF STRUCTURAL STEEL - AASHTO M270 GRADE 36	20,000 LBS. PER SQ. IN.
- AASHTO M270 GRADE 50W	27,000 LBS. PER SQ. IN.
- AASHTO M270 GRADE 50	27,000 LBS. PER SQ. IN.
REINFORCING STEEL IN TENSION - GRADE 60	24,000 LBS. PER SQ. IN.
CONCRETE IN COMPRESSION	1,200 LBS. PER SQ. IN.
CONCRETE IN SHEAR	SEE A.A.S.H.T.O.
STRUCTURAL TIMBER - TREATED OR UNTREATED EXTREME FIBER STRESS	1,800 LBS. PER SQ. IN.
COMPRESSION PERPENDICULAR TO GRAIN OF TIMBER	375 LBS. PER SQ. IN.
EQUIVALENT FLUID PRESSURE OF EARTH	30 LBS. PER CU. FT. (MINIMUM)

MATERIAL AND WORKMANSHIP:

EXCEPT AS MAY OTHERWISE BE SPECIFIED ON PLANS OR IN THE SPECIAL PROVISIONS, ALL MATERIAL AND WORKMANSHIP SHALL BE IN ACCORDANCE WITH THE 2018 "STANDARD SPECIFICATIONS FOR ROADS AND STRUCTURES" OF THE N. C. DEPARTMENT OF TRANSPORTATION.

STEEL SHEET PILING FOR PERMANENT OR TEMPORARY APPLICATIONS SHALL BE HOT ROLLED.

CONCRETE:

UNLESS OTHERWISE REQUIRED ON PLANS, CLASS A CONCRETE SHALL BE USED FOR ALL PORTIONS OF ALL STRUCTURES WITH THE EXCEPTION THAT: CLASS AA CONCRETE SHALL BE USED IN BRIDGE SUPERSTRUCTURES, ABUTMENT BACKWALLS, AND APPROACH SLABS; AND CLASS B CONCRETE SHALL BE USED FOR SLOPE PROTECTION AND RIP RAP.

CONCRETE CHAMFERS:

UNLESS OTHERWISE NOTED ON THE PLANS, ALL EXPOSED CORNERS ON STRUCTURES SHALL BE CHAMFERED ¾" WITH THE FOLLOWING EXCEPTIONS: TOP CORNERS OF CURBS MAY BE ROUNDED TO 1½" RADIUS WHICH IS BUILT INTO CURB FORMS; CORNERS OF TRANSVERSE FLOOR EXPANSION JOINTS SHALL BE ROUNDED WITH A ¼" FINISHING TOOL UNLESS OTHERWISE REQUIRED ON PLANS; AND CORNERS OF EXPANSION JOINTS IN THE ROADWAY FACES AND TOPS OF CURBS AND SIDEWALKS SHALL BE ROUNDED TO A ¼" RADIUS WITH A FINISHING STONE OR TOOL UNLESS OTHERWISE REQUIRED ON PLANS.

DOWELS:

DOWELS WHEN INDICATED ON PLANS AS FOR CULVERT EXTENSIONS, SHALL BE EMBEDDED AT LEAST 12" INTO THE OLD CONCRETE AND GROUTED INTO PLACE WITH 1:2 CEMENT MORTAR.

ALLOWANCE FOR DEAD LOAD DEFLECTION, SETTLEMENT, ETC. IN CASTING SUPERSTRUCTURES:

BRIDGES SHALL BE BUILT ON THE GRADE OR VERTICAL CURVE SHOWN ON PLANS. SLABS, CURBS AND PARAPETS SHALL CONFORM TO THE GRADE OR CURVE.

ALL DIMENSIONS WHICH ARE GIVEN IN SECTION AND ARE AFFECTED BY DEAD LOAD DEFLECTIONS ARE DIMENSIONS AT CENTER LINE OF BEARING UNLESS OTHERWISE NOTED ON PLANS. IN SETTING FORMS FOR STEEL BEAM BRIDGES AND PRESTRESSED CONCRETE GIRDER BRIDGES, ADJUSTMENTS SHALL BE MADE DUE TO THE DEAD LOAD DEFLECTIONS FOR THE ELEVATIONS SHOWN. WHERE BLOCKS ARE SHOWN OVER BEAMS FOR BUILDING UP TO THE SLAB, THE VERTICAL DIMENSIONS OF THE BLOCKS SHALL BE ADJUSTED BETWEEN BEARINGS TO COMPENSATE FOR DEAD LOAD DEFLECTIONS, VERTICAL CURVE ORDINATE, AND ACTUAL BEAM CAMBER. WHERE BOTTOM OF SLAB IS IN LINE WITH BOTTOM OF TOP FLANGES, DEPTH OF SLAB BETWEEN BEARINGS SHALL BE ADJUSTED TO COMPENSATE FOR DEAD LOAD DEFLECTION, VERTICAL CURVE ORDINATE, AND ACTUAL BEAM CAMBER.

IN SETTING FALSEWORK AND FORMS FOR REINFORCED CONCRETE SPANS, AN ALLOWANCE SHALL BE MADE FOR DEAD LOAD DEFLECTIONS, SETTLEMENT OF FALSEWORK, AND PERMANENT CAMBER WHICH SHALL BE PROVIDED FOR IN ADDITION TO THE ELEVATIONS SHOWN. AFTER REMOVAL OF THE FALSEWORK, THE FINISHED STRUCTURES SHALL CONFORM TO THE PROFILE AND ELEVATIONS SHOWN ON THE PLANS AND CONSTRUCTION ELEVATIONS FURNISHED BY THE ENGINEER.

DETAILED DRAWINGS FOR FALSEWORK OR FORMS FOR BRIDGE SUPERSTRUCTURE AND ANY STRUCTURE OR PARTS OF A STRUCTURE AS NOTED ON THE PLANS SHALL BE SUBMITTED TO THE ENGINEER FOR APPROVAL BEFORE CONSTRUCTION OF THE FALSEWORK OR FORMS IS STARTED.

REINFORCING STEEL:

ALL REINFORCING STEEL SHALL BE DEFORMED. DIMENSIONS RELATIVE TO PLACEMENT OF REINFORCING ARE TO CENTERS OF BARS UNLESS OTHERWISE INDICATED IN THE PLANS. DIMENSIONS ON BAR DETAILS ARE TO CENTERS OF BARS OR ARE OUT TO OUT AS INDICATED ON PLANS.

WIRE BAR SUPPORTS SHALL BE PROVIDED FOR REINFORCING STEEL WHERE INDICATED ON THE PLANS. WHEN BAR SUPPORT PIECES ARE PLACED IN CONTINUOUS LINES, THEY SHALL BE SO PLACED THAT THE ENDS OF THE SUPPORTING WIRES SHALL BE LAPPED TO LOCK LEGS ON ADJOINING PIECES.

STRUCTURAL STEEL:

AT THE CONTRACTOR'S OPTION, HE MAY SUBSTITUTE ⅞" Ø SHEAR STUDS FOR THE ¾" Ø STUDS SPECIFIED ON THE PLANS. THIS SUBSTITUTION SHALL BE MADE AT THE RATE OF 3 - ⅞" Ø STUDS FOR 4 - ¾" Ø STUDS, AND STUD SPACING CHANGES SHALL BE MADE AS NECESSARY TO PROVIDE THE SAME EQUIVALENT NUMBER OF ⅞" Ø STUDS ALONG THE BEAM AS SHOWN FOR ¾" Ø STUDS BASED ON THE RATIO OF 3 - ⅞" Ø STUDS FOR 4 - ¾" Ø STUDS. STUDS OF THE LENGTH SPECIFIED ON THE PLANS MUST BE PROVIDED. THE MAXIMUM SPACING SHALL BE 2'-0".

EXCEPT AT THE INTERIOR SUPPORTS OF CONTINUOUS BEAMS WHERE THE COVER PLATE IS IN CONTACT WITH BEARING PLATE, THE CONTRACTOR MAY, AT HIS OPTION, SUBSTITUTE FOR THE COVER PLATES DESIGNATED ON THE PLANS COVER PLATES OF THE EQUIVALENT AREA PROVIDED THESE PLATES ARE AT LEAST 5/16" IN THICKNESS AND DO NOT EXCEED A WIDTH EQUAL TO THE FLANGE WIDTH LESS 2" OR A THICKNESS EQUAL TO 2 TIMES THE FLANGE THICKNESS. THE SIZE OF FILLET WELDS SHALL CONFORM TO THE REQUIREMENTS OF THE CURRENT ANSI/AASHTO/AWS "BRIDGE WELDING CODE". ELECTROSLAG WELDING WILL NOT BE PERMITTED.

WITH THE SOLE EXCEPTION OF EDGES AT SURFACES WHICH BEAR ON OTHER SURFACES, ALL SHARP EDGES AND ENDS OF SHAPES AND PLATES SHALL BE SLIGHTLY ROUNDED BY SUITABLE MEANS TO A RADIUS OF APPROXIMATELY 1/16 INCH OR EQUIVALENT FLAT SURFACE AT A SUITABLE ANGLE PRIOR TO PAINTING, GALVANIZING, OR METALLIZING.

HANDRAILS AND POSTS:

METAL STANDARDS AND FACES OF THE CONCRETE END POSTS FOR THE METAL RAIL SHALL BE SET NORMAL TO THE GRADE OF THE CURB, UNLESS OTHERWISE SHOWN ON PLANS. THE METAL RAIL AND TOPS OF CONCRETE POSTS USED WITH THE ALUMINUM RAIL SHALL BE BUILT PARALLEL TO THE GRADE OF THE CURB.

METAL HANDRAILS SHALL BE IN ACCORDANCE WITH THE PLANS. RAILS SHALL BE AS MANUFACTURED FOR BRIDGE RAILING. CASTINGS SHALL BE OF A UNIFORM APPEARANCE. FINS AND OTHER DEFORMATIONS RESULTING FROM CASTING OR OTHERWISE SHALL BE REMOVED IN A MANNER SO THAT A UNIFORM COLORING OF THE COMPLETED CASTING SHALL BE OBTAINED. CASTINGS WITH DISCOLORATIONS OR OF NON-UNIFORM COLORING WILL NOT BE ACCEPTED. CERTIFIED MILL REPORTS ARE REQUIRED FOR METAL RAILS AND POSTS.

SPECIAL NOTES:

GENERALLY, IN CASE OF DISCREPANCY, THIS STANDARD SHEET OF NOTES SHALL GOVERN OVER THE SPECIFICATIONS, BUT THE REMAINDER OF THE PLANS SHALL GOVERN OVER NOTES HEREON, AND SPECIAL PROVISIONS SHALL GOVERN OVER ALL. SEE SPECIFICATIONS ARTICLE 105-4.

ENGLISH

JANUARY, 1990

STD. NO. SN

REV. 6-16-95 EEM ω RGW REV. 5-7-03 RWW ω JTE REV. 10-1-11 MAA ω GM
REV. 8-16-99 RWW ω LES REV. 5-1-06 TLA ω GM REV. 12-17 MAA ω THC

11-DEC-2019 10:58
H:\Structures\Plans\B4635_SMU_SN_810009.dgn
pknewton