STATE	PROJECT REFERENCE NO.	SHEET NO.	TOTAL SHEETS
NC	17BP.3.R.14	1	60

STATE PROJ. NO.		DESCRIPTION
17BP.3.R.14		CONST

PROJECT: 17BP.3.R.14

CONTRACT: DC00060

See Sheet 1-A For Index of Sheets

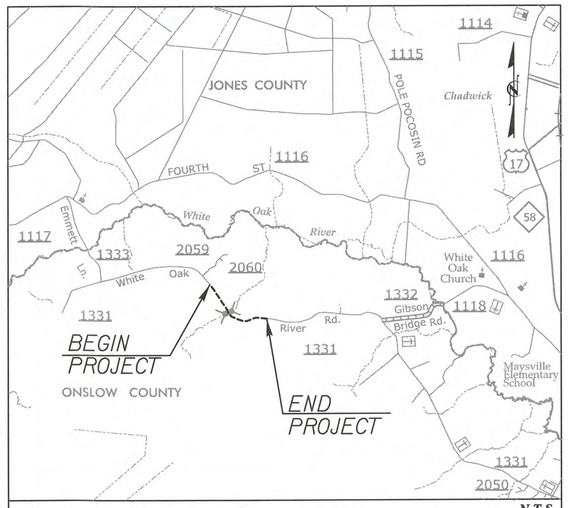

VICINITY MAP

N.T.S.

ONSITE DETOUR

STATE OF NORTH CAROLINA
DIVISION OF HIGHWAYS

ONSLOW COUNTY

LOCATION: BRIDGE NO. 193 OVER FORK BRANCH ON SR 1331 (WHITE OAK RIVER RD.)

TYPE OF WORK: GRADING, PAVING, WIDENING, DRAINAGE, CULVERT & GUARDRAIL

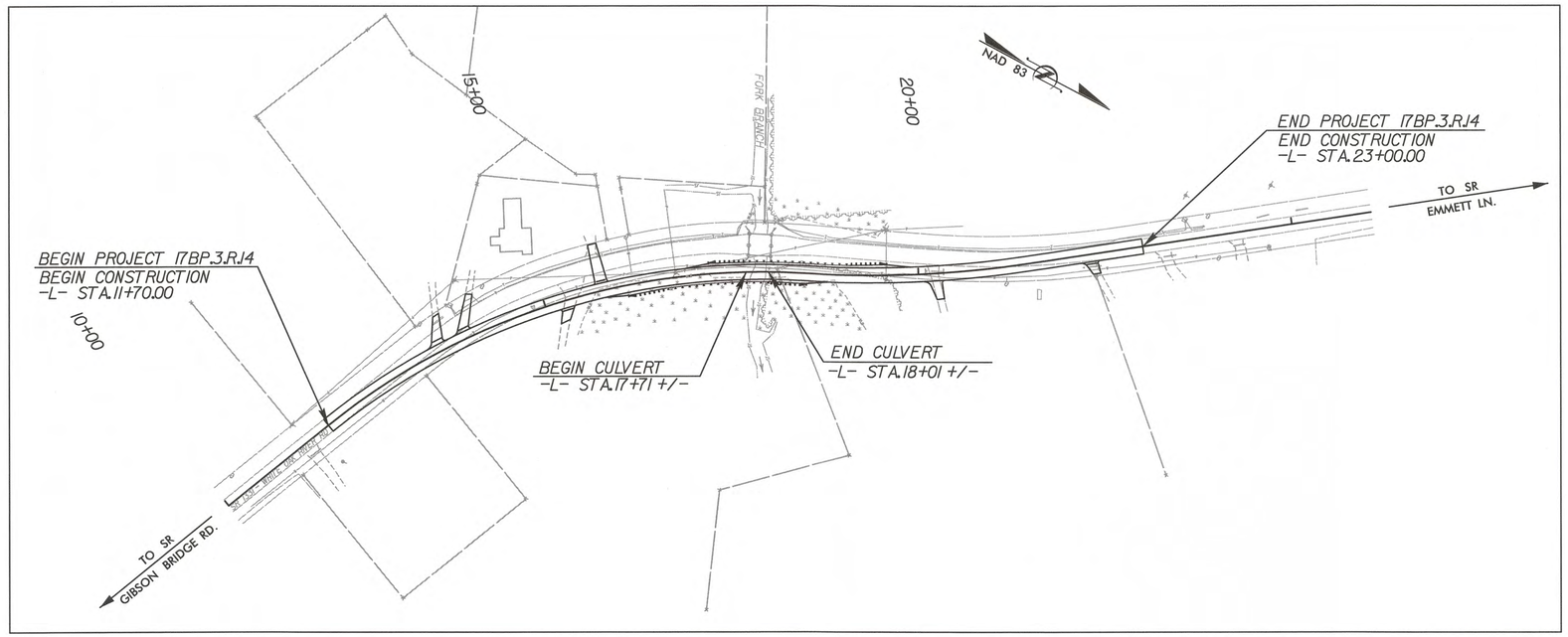

CLEARING ON THIS PROJECT SHALL BE PERFORMED TO THE LIMITS ESTABLISHED BY METHOD II.

GRAPHIC SCALES

50 25 0 50 100
PLANS

50 25 0 50 100
PROFILE (HORIZONTAL)

10 5 0 10 20
PROFILE (VERTICAL)

DESIGN DATA

ADT 2005 = 1300
ADT 2035 = 2600
DHV = 10%
D = 60%
T = 6% *
STATUTORY = 55 MPH
ADVISORY = 50 MPH
* TTST 2% DUAL 4%

SUB REGIONAL TIER

PROJECT LENGTH

LENGTH OF ROADWAY PROJECT 17BP.3.R.14 =	0.208 MI.
LENGTH OF STRUCTURE PROJECT 17BP.3.R.14 =	0.006 MI.
TOTAL LENGTH OF PROJECT 17BP.3.R.14 =	0.214 MI.

Prepared In the Office of:

HNTB

HNTB NORTH CAROLINA, P.C.
343 E. Six Forks Road, Suite 200
Raleigh, North Carolina 27609
NC License No: C-1554

2012 STANDARD SPECIFICATIONS

RIGHT OF WAY DATE:
JUNE 13, 2013

LETTING DATE:
APRIL 17, 2014

ENRICO A. ROQUE, P.E.
PROJECT ENGINEER

ANTHONY THOMPSON, P.E.
PROJECT DESIGNER

AMANDA GLYNN, P.E.
NCDOT CONTACT

HYDRAULICS ENGINEER

NORTH CAROLINA PROFESSIONAL SEAL 15764 ENGINEER JAMES A. BYRD

SIGNATURE: James A. Byrd P.E. 3/7/14

ROADWAY DESIGN ENGINEER

NORTH CAROLINA PROFESSIONAL SEAL 19824 ENGINEER ENRICO A. ROQUE

SIGNATURE: Enrico A. Roque P.E. 3/10/14

DIVISION OF HIGHWAYS
STATE OF NORTH CAROLINA

STATE OF NORTH CAROLINA DEPARTMENT OF TRANSPORTATION

P.E.
STATE HIGHWAY DESIGN ENGINEER

3/7/2014
1:44:15 PM
...\Proj\66-0193_rdy_tsh.dgn

HNTB NORTH CAROLINA, P.C.
343 E. Six Forks Road, Suite 200
Raleigh, North Carolina 27609
NC License No: C-1554

PROJECT REFERENCE NO.	SHEET NO.
17BP.3.R.14	1-A
R/W SHEET NO.	
ROADWAY DESIGN ENGINEER	HYDRAULICS ENGINEER

NORTH CAROLINA PROFESSIONAL SEAL 19824 ENGINEER
11/26/13

INDEX OF SHEETS

SHEET NUMBER	SHEET
1	TITLE SHEET
1-A	INDEX OF SHEETS, GENERAL NOTES & LIST OF STANDARDS
1-B	SYMBOLOGY SHEET
2	TYPICAL SECTION SHEET
3	EARTHWORK, PAVEMENT REMOVAL, GUARDRAIL SUMMARY, ROW SUMMARY, & DRAINAGE SUMMARY SHEET
4	PLAN & PROFILE SHEET
TMP-1 THRU TMP-4	TRAFFIC CONTROL PLANS
EC-1 THRU EC-8	EROSION CONTROL PLANS
X-1 THRU X-7	-L- CROSS SECTION SHEETS
UC-1 THRU UC-4	UTILITY CONSTRUCTION PLANS
UO-1 THRU UO-2	UTILITIES BY OTHERS PLANS
	ROADWAY SUBSURFACE INVESTIGATION
	STRUCTURE SUBSURFACE INVESTIGATION

GENERAL NOTES:

GENERAL NOTES: 2012 SPECIFICATIONS
EFFECTIVE: 01-17-2012
REVISED: 07-30-2012

GRADE LINE:
GRADING AND SURFACING:

THE GRADE LINES SHOWN DENOTE THE FINISHED ELEVATION OF THE PROPOSED SURFACING AT GRADE POINTS SHOWN ON THE TYPICAL SECTIONS. GRADE LINES MAY BE ADJUSTED AT THEIR BEGINNING AND ENDING AND AT STRUCTURES AS DIRECTED BY THE ENGINEER IN ORDER TO SECURE A PROPER TIE-IN.

CLEARING:

CLEARING ON THIS PROJECT SHALL BE PERFORMED TO THE LIMITS ESTABLISHED BY METHOD II.

SUPERELEVATION:

ALL CURVES ON THIS PROJECT SHALL BE SUPERELEVATED IN ACCORDANCE WITH STD. NO. 225.04
SUPERELEVATION IS TO BE REVOLVED ABOUT THE GRADE POINTS SHOWN ON THE TYPICAL SECTIONS.

SHOULDER CONSTRUCTION:

ASPHALT, EARTH, AND CONCRETE SHOULDER CONSTRUCTION ON THE HIGH SIDE OF SUPERELEVATED CURVES SHALL BE IN ACCORDANCE WITH

SIDE ROADS:

THE CONTRACTOR WILL BE REQUIRED TO DO ALL NECESSARY WORK TO PROVIDE SUITABLE CONNECTIONS WITH ALL ROADS, STREETS, AND DRIVES ENTERING THIS PROJECT. THIS WORK WILL BE PAID FOR AT THE CONTRACT UNIT PRICE FOR THE PARTICULAR ITEMS INVOLVED.

DRIVEWAYS:

DRIVEWAYS SHALL BE CONSTRUCTED IN ACCORDANCE WITH STD. 848.02 USING 3' RADII OR RADII AS SHOWN ON THE PLANS. LOCATIONS OF DRIVES WILL BE AS SHOWN ON THE PLANS OR AS DIRECTED BY THE ENGINEER.

GUARDRAIL:

THE GUARDRAIL LOCATIONS SHOWN ON THE PLANS MAY BE ADJUSTED DURING CONSTRUCTION AS DIRECTED BY THE ENGINEER. THE CONTRACTOR SHOULD CONSULT WITH THE ENGINEER PRIOR TO ORDERING GUARDRAIL MATERIAL.

SUBSURFACE PLANS:

ROADWAY AND STRUCTURE SUBSURFACE INVESTIGATION DOCUMENTS ARE PROVIDED WITH THIS SET OF PLANS.

UTILITIES:

UTILITY OWNERS ON THIS PROJECT ARE

Power - Jones-Onslow EMC

Water - ONWASA

Phone - Centurylink

ANY RELOCATION OF EXISTING UTILITIES WILL BE ACCOMPLISHED BY OTHERS, EXCEPT AS SHOWN ON THE PLANS.
UTILITIES BY OTHERS PLANS INCLUDED IN THE PROJECT.)
RIGHT-OF-WAY MARKERS:

ALL RIGHT-OF-WAY MARKERS ON THIS PROJECT SHALL BE PLACED BY OTHERS.

EFF. 01-17-2012
REV. 10-30-2012

2012 ROADWAY ENGLISH STANDARD DRAWINGS

The following Roadway Standards as appear in "Roadway Standard Drawings" Highway Design Branch - N. C. Department of Transportation - Raleigh, N. C., Dated January, 2012 are applicable to this project and by reference hereby are considered a part of these plans:

STD.NO.	TITLE
DIVISION 2 - EARTHWORK	
200.03	Method of Clearing - Method II
225.02	Guide for Grading Subgrade - Secondary and Local
225.04	Method of Obtaining Superelevation - Two Lane Pavement
DIVISION 3 - PIPE CULVERTS	
300.01	Method of Pipe Installation
310.10	Driveway Pipe Construction
DIVISION 5 - SUBGRADE, BASES AND SHOULDERS	
560.01	Method of Shoulder Construction - High Side of Superelevated Curve - Method I
DIVISION 8 - INCIDENTALS	
848.02	Driveway Turnout - Radius Type
862.01	Guardrail Placement
862.02	Guardrail Installation
876.01	Rip Rap In Channels

-L- CENTERLINE COORDINATE LIST			
POINT	STATION	NORTHING	EASTING
POT	10+00.00	428897.5783	2506433.7500
BEG	11+70.00	428964.3378	2506277.4069
PC	11+73.75	428965.8103	2506273.9586
PRC	18+45.28	429423.7820	2505803.6771
PT	21+44.41	429680.8071	2505651.7139
END	23+00.00	429805.8097	2505559.0677
POT	26+06.16	430051.7793	2505376.7664

NOTE: SEE SHEET NO. 4 FOR DATUM DESCRIPTION

REVISIONS

11/25/2013
4:18:29 PM
...\Proj\66-0193_rdy_gen.dgn

PROJECT REFERENCE NO.	SHEET NO.
17BP.3.RJ4	1-B

Note: Not to Scale

S.U.E. = Subsurface Utility Engineering

STATE OF NORTH CAROLINA
DIVISION OF HIGHWAYS

CONVENTIONAL PLAN SHEET SYMBOLS

BOUNDARIES AND PROPERTY:

- State Line
- County Line
- Township Line
- City Line
- Reservation Line
- Property Line
- Existing Iron Pin — EIP
- Property Corner
- Property Monument — ECM
- Parcel/Sequence Number — 123
- Existing Fence Line
- Proposed Woven Wire Fence
- Proposed Chain Link Fence
- Proposed Barbed Wire Fence
- Existing Wetland Boundary — WLB
- Proposed Wetland Boundary — WLB
- Existing Endangered Animal Boundary — EAB
- Existing Endangered Plant Boundary — EPB

BUILDINGS AND OTHER CULTURE:

- Gas Pump Vent or U/G Tank Cap
- Sign — S
- Well — W
- Small Mine
- Foundation
- Area Outline
- Cemetery
- Building
- School
- Church
- Dam

HYDROLOGY:

- Stream or Body of Water
- Hydro, Pool or Reservoir
- Jurisdictional Stream — JS
- Buffer Zone 1 — BZ 1
- Buffer Zone 2 — BZ 2
- Flow Arrow
- Disappearing Stream
- Spring
- Wetland
- Proposed Lateral, Tail, Head Ditch — FLOW
- False Sump

RAILROADS:

- Standard Gauge — CSX TRANSPORTATION
- RR Signal Milepost — MILEPOST 35
- Switch — SWITCH
- RR Abandoned
- RR Dismantled

RIGHT OF WAY:

- Baseline Control Point
- Existing Right of Way Marker
- Existing Right of Way Line
- Proposed Right of Way Line — RW
- Proposed Right of Way Line with Iron Pin and Cap Marker — RW
- Proposed Right of Way Line with Concrete or Granite Marker — RW
- Existing Control of Access — CA
- Proposed Control of Access — CA
- Existing Easement Line — E
- Proposed Temporary Construction Easement — E
- Proposed Temporary Drainage Easement — TDE
- Proposed Permanent Drainage Easement — PDE
- Proposed Permanent Utility Easement — PUE

ROADS AND RELATED FEATURES:

- Existing Edge of Pavement
- Existing Curb
- Proposed Slope Stakes Cut — C
- Proposed Slope Stakes Fill — F
- Proposed Wheel Chair Ramp — WCR
- Proposed Wheel Chair Ramp Curb Cut — WCC
- Curb Cut for Future Wheel Chair Ramp — CCFR
- Existing Metal Guardrail
- Proposed Guardrail
- Existing Cable Guiderail
- Proposed Cable Guiderail
- Equality Symbol
- Pavement Removal

VEGETATION:

- Single Tree
- Single Shrub
- Hedge
- Woods Line
- Orchard
- Vineyard — Vineyard

EXISTING STRUCTURES:

MAJOR:

- Bridge, Tunnel or Box Culvert — CONC
- Bridge Wing Wall, Head Wall and End Wall — CONC WW

MINOR:

- Head and End Wall — CONC HW
- Pipe Culvert
- Footbridge
- Drainage Box: Catch Basin, DI or JB — CB
- Paved Ditch Gutter
- Storm Sewer Manhole — S
- Storm Sewer — S

UTILITIES:

POWER:

- Existing Power Pole
- Proposed Power Pole
- Existing Joint Use Pole
- Proposed Joint Use Pole
- Power Manhole — P
- Power Line Tower
- Power Transformer
- U/G Power Cable Hand Hole — HH
- H-Frame Pole
- Recorded U/G Power Line — P
- Designated U/G Power Line (S.U.E.*) — P

TELEPHONE:

- Existing Telephone Pole
- Proposed Telephone Pole
- Telephone Manhole — T
- Telephone Booth
- Telephone Pedestal — T
- Telephone Cell Tower
- U/G Telephone Cable Hand Hole — HH
- Recorded U/G Telephone Cable — T
- Designated U/G Telephone Cable (S.U.E.*) — T
- Recorded U/G Telephone Conduit — TC
- Designated U/G Telephone Conduit (S.U.E.*) — TC
- Recorded U/G Fiber Optics Cable — T FO
- Designated U/G Fiber Optics Cable (S.U.E.*) — T FO

WATER:

- Water Manhole — W
- Water Meter
- Water Valve
- Water Hydrant
- Recorded U/G Water Line — W
- Designated U/G Water Line (S.U.E.*) — W
- Above Ground Water Line — A/G Water

TV:

- TV Satellite Dish
- TV Pedestal — C
- TV Tower
- U/G TV Cable Hand Hole — HH
- Recorded U/G TV Cable — TV
- Designated U/G TV Cable (S.U.E.*) — TV
- Recorded U/G Fiber Optic Cable — TV FO
- Designated U/G Fiber Optic Cable (S.U.E.*) — TV FO

GAS:

- Gas Valve
- Gas Meter
- Recorded U/G Gas Line — G
- Designated U/G Gas Line (S.U.E.*) — G
- Above Ground Gas Line — A/G Gas

SANITARY SEWER:

- Sanitary Sewer Manhole
- Sanitary Sewer Cleanout
- U/G Sanitary Sewer Line — SS
- Above Ground Sanitary Sewer — A/G Sanitary Sewer
- Recorded SS Forced Main Line — FSS
- Designated SS Forced Main Line (S.U.E.*) — FSS

MISCELLANEOUS:

- Utility Pole
- Utility Pole with Base
- Utility Located Object
- Utility Traffic Signal Box — S
- Utility Unknown U/G Line — ?UTL
- U/G Tank; Water, Gas, Oil
- A/G Tank; Water, Gas, Oil
- U/G Test Hole (S.U.E.*)
- Abandoned According to Utility Records — AATUR
- End of Information — E.O.I.

HNTB
HNTB NORTH CAROLINA, P.C.
343 E. Six Forks Road, Suite 200
Raleigh, North Carolina 27609
NC License No: C-1554

PROJECT REFERENCE NO.	SHEET NO.
17BP.3.R.14	2
R/W SHEET NO.	
ROADWAY DESIGN ENGINEER	HYDRAULICS ENGINEER

NORTH CAROLINA PROFESSIONAL SEAL ENGINEER RICHARD OLIVER
11/20/13

PAVEMENT SCHEDULE

C1	PROP. APPROX. 3" ASPHALT CONCRETE SURFACE COURSE, TYPE SF9.5A, AT AN AVERAGE RATE OF 165 LBS. PER SQ. YARD IN EACH OF TWO LAYERS.
E1	PROP. APPROX. 5" ASPHALT CONCRETE BASE COURSE, TYPE B25.0B, AT AN AVERAGE RATE OF 570 LBS. PER SQ. YARD.
E2	PROP. VARIABLE DEPTH ASPHALT CONCRETE BASE COURSE, TYPE B25.0B AT AN AVERAGE RATE OF 114 LBS. PER SQ. YARD PER INCH. DEPTH TO BE PLACED IN LAYERS NOT GREATER THAN 5.5" IN DEPTH OR LESS THAN 3" IN DEPTH.
T	EARTH MATERIAL
U	EXISTING PAVEMENT
W	WEDGING (SEE DETAIL)

ALL PAVEMENT EDGE SLOPES ARE 1:1 UNLESS SHOWN OTHERWISE

USE TYPICAL SECTION NO. 1 FROM:
-L- STA. 13+50.00 TO -L- STA. 21+00.00

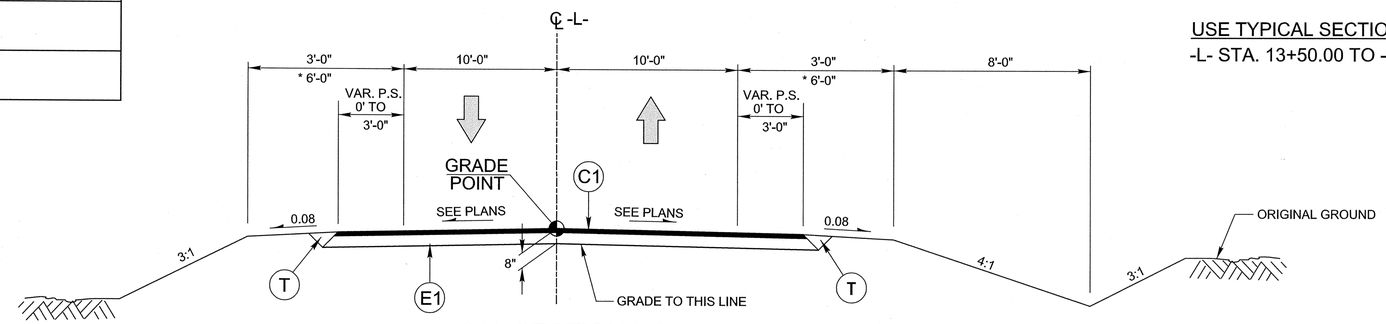

TYPICAL SECTION NO. 1

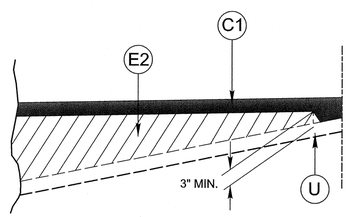

DETAIL SHOWING METHOD OF WEDGING

SEE TYPICAL SECTIONS

USE TYPICAL SECTION NO. 2 FROM:
-L- STA. 11+70.00 TO -L- STA. 13+50.00
-L- STA. 21+00.00 TO -L- STA. 23+00.00

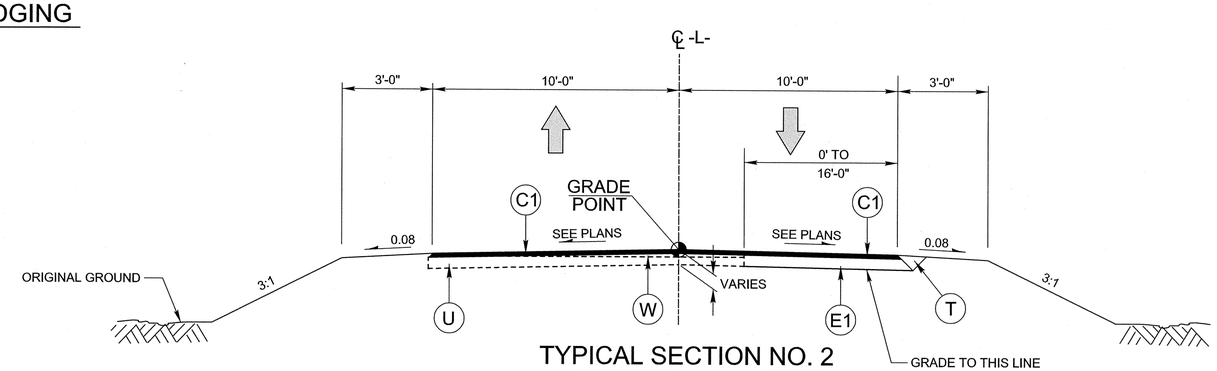

TYPICAL SECTION NO. 2

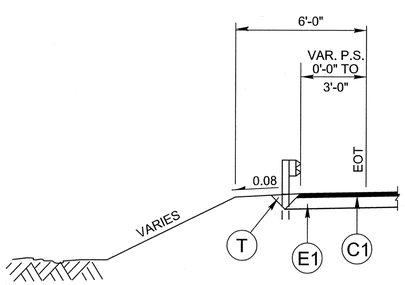

DETAIL SHOWING GUARDRAIL PLACEMENT

SEE PLANS FOR GUARDRAIL LOCATIONS

NOTES: * SHOULDER WIDTH INCREASED 3' WITH THE USE OF GUARDRAIL

REVISIONS

11/20/2013
12:05:29 PM
...\Proj\66-0193_rdy_typ.dgn

HNTB
HNTB NORTH CAROLINA, P.C.
343 E. Six Forks Road, Suite 200
Raleigh, North Carolina 27609
NC License No: C-1554

PROJECT REFERENCE NO.	SHEET NO.
17BP.3.R.14	3
R/W SHEET NO.	
ROADWAY DESIGN ENGINEER	HYDRAULICS ENGINEER

NORTH CAROLINA PROFESSIONAL SEAL 19824 ENGINEER JACQUELINE R. GUDGER
11/25/13

ROW AREA DATA SUMMARY

PARCEL NO.	PROPERTY OWNERS NAMES	TOTAL ACREAGE	AREA TAKEN	AREA REMAINING RT.	AREA REMAINING LT.	CONST. EASE.	PERM. DRAIN. EASE.	TEMP. DRAIN. EASE.
1	LOUIS STROBEL JR	–	0.50 AC					
2	NELDA H MORGAN	–	0.26 AC					
3	TEENY MARIE TAIT aka MARIE STROBEL MORTON	–	1908.2 SF					

DRAINAGE SUMMARY

STATION / SIZE / THICKNESS OR GAUGE	LOCATION (LT,RT, OR CL)	STRUCTURE NO. FROM	STRUCTURE NO. TO	TOP ELEVATION	INVERT ELEVATION	INVERT ELEVATION	SLOPE CRITICAL	CLASS III R.C. PIPE (UNLESS NOTED OTHERWISE) 15"	18"	24"	QUANTITIES FOR DRAINAGE STRUCTURES: PER EACH (0 THRU 5.0')	TOTAL L.F. FOR PAY QUANTITY SHALL BE COL. 'A' + (1.3 X COL. 'B'): A 5.0' THRU 10.0'	B 10.0' AND ABOVE	SIDE DRAIN PIPE 15"	18"	24"	GRATED T.B.D.I., TYPE 'B' STD. 840.36	D.I. FRAME AND GRATE STD. 840.20		REMARKS
–L– 13+54.18	LT													24						
–L– 13+93.50	LT													24						
–L– 15+22.71	RT													28						
–L– 15+79.48	LT													24						
–L– 20+25.82	RT													24						
–L– 22+32.91	RT													24						
TOTAL														148						

ABBREVIATIONS

C.B.	CATCH BASIN
N.D.I.	NARROW DROP INLET
D.I.	DROP INLET
M.D.I.	MEDIAN DROP INLET
M.D.I. (N.S.)	MEDIAN DROP INLET (NARROW SLOT)
J.B.	JUNCTION BOX
M.H.	MANHOLE
T.B.D.I.	TRAFFIC BEARING DROP INLET
T.B.J.B.	TRAFFIC BEARING JUCTION BOX

PAVEMENT REMOVAL SUMMARY
IN SQUARE YARDS

LOCATION	REMOVAL OF ASPHALT PAVEMENT	BREAKING OF ASPHALT PAVEMENT
-L- STA. 11+95 TO 17+76	1212	
-L- STA. 18+05 TO 22+90	736	
GRAND TOTAL	1948	
SAY	1950	

SUMMARY OF EARTHWORK
IN CUBIC YARDS

STATION	STATION	UNCLASSIFIED EXCAVATION	EMBANK. +%	BORROW	WASTE
–L– STA. 11+70.00	–L– STA. 23+00.00	1666	2852	2852	1666
PROJECT SUBTOTAL		1666	2852	2852	1666
WASTE TO REPLACE BORROW				0	0
PROJECT TOTAL		1666	2852	2852	1666
GRAND TOTALS:		1666		2852	
SAY:		1170		2860	

GUARDRAIL SUMMARY

SURVEY LINE	BEG. STA.	END STA.	LOCATION	LENGTH: STRAIGHT	SHOP CURVED	DOUBLE FACED	WARRANT POINT: APPROACH END	TRAILING END	"N" DIST. FROM E.O.L.	TOTAL SHOULDER WIDTH	FLARE LENGTH: APPROACH END	TRAILING END	W: APPROACH END	TRAILING END	ANCHORS: XI MOD	XI	GRAU 350	TYPE 350 (TL–3)	XIII	CAT–1	III	BIC	AT–1	IMPACT ATTENUATOR TYPE 350: EA	G	NG	SINGLE FACED GUARDRAIL	REMOVE EXISTING GUARDRAIL	REMOVE AND STOCKPILE EXISTING GUARDRAIL	REMARKS
–L–	16+11.57	18+52.68	RT	237.5			17+69.38	17+99.25	3	6	50	50	1	1			2													
–L–	17+21.97	19+58.65	LT	237.5			18+02.79	17+74.20	3	6	50	50	1	1			2													
	LESS ANCHOR DEDUCTIONS																													
	GRAU 350	4 @ 50.00'	=	200.00																										
			TOTAL	275.0													4													
			SAY	275.0																										
	(5 ADDITIONAL GUARDRAIL POST)																													

REVISIONS

11/25/2013
5:14:27 PM
...\R-5704\B99-0193_rdy_sum.dgn

PROJECT REFERENCE NO.	SHEET NO.
17BP.3.R.14	04
R/W SHEET NO.	
ROADWAY DESIGN ENGINEER	HYDRAULICS ENGINEER

HNTB
HNTB NORTH CAROLINA, P.C.
343 E. Six Forks Road, Suite 200
Raleigh, North Carolina 27609
NC License No: C-1554

PLAN

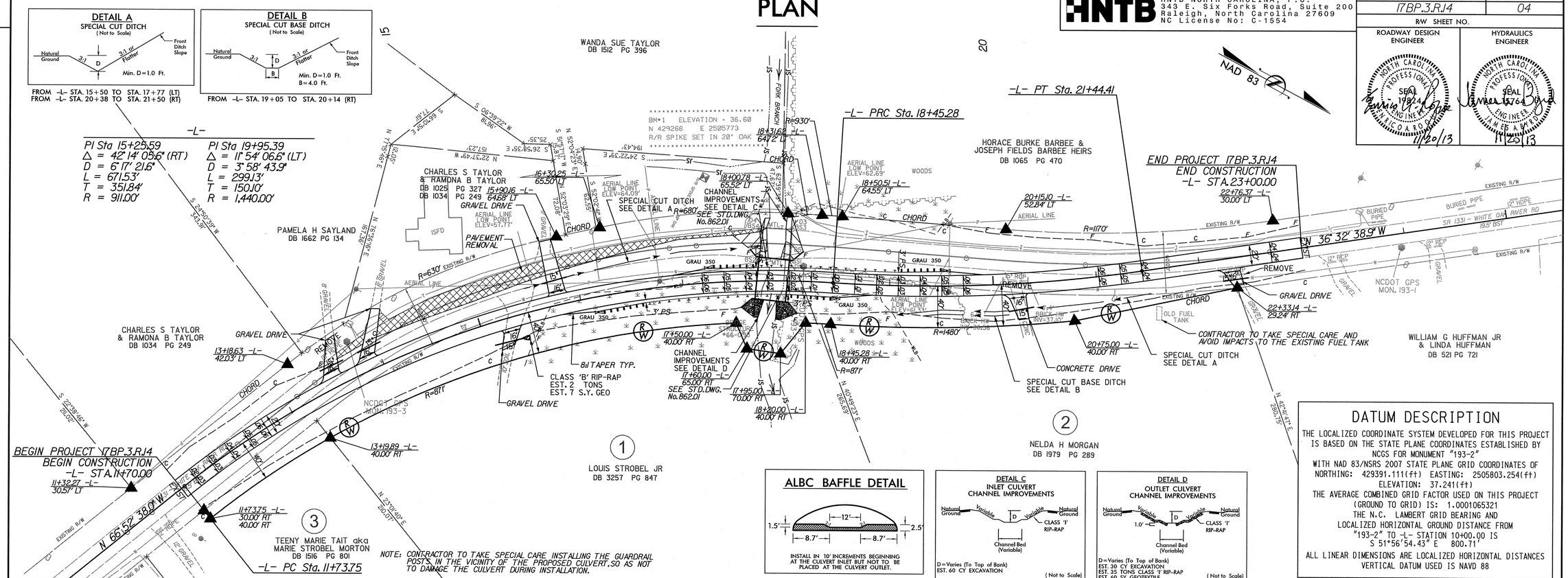

DATUM DESCRIPTION

THE LOCALIZED COORDINATE SYSTEM DEVELOPED FOR THIS PROJECT IS BASED ON THE STATE PLANE COORDINATES ESTABLISHED BY NCGS FOR MONUMENT "193-2"
WITH NAD 83/NSRS 2007 STATE PLANE GRID COORDINATES OF
NORTHING: 429391.111(ft) EASTING: 2505803.254(ft)
ELEVATION: 37.241(ft)
THE AVERAGE COMBINED GRID FACTOR USED ON THIS PROJECT (GROUND TO GRID) IS: 1.0001065321
THE N.C. LAMBERT GRID BEARING AND LOCALIZED HORIZONTAL GROUND DISTANCE FROM "193-2" TO -L- STATION 10+00.00 IS S 51°56'54.43" E 800.71'
ALL LINEAR DIMENSIONS ARE LOCALIZED HORIZONTAL DISTANCES
VERTICAL DATUM USED IS NAVD 88

PROFILE

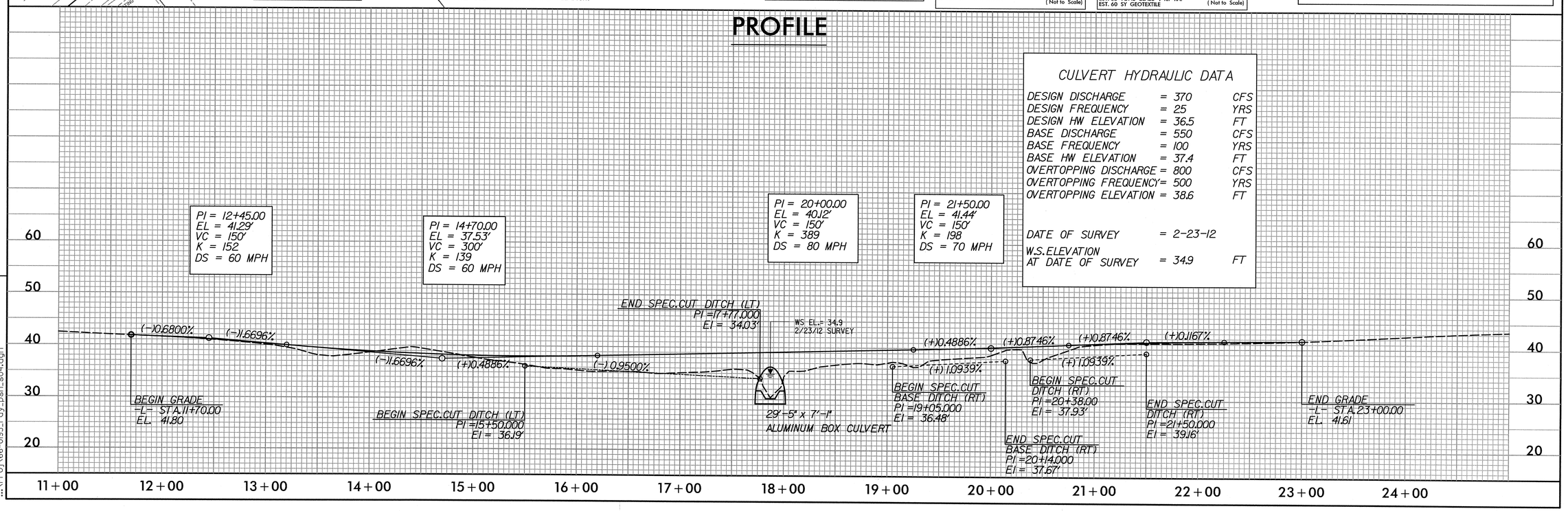

REVISIONS

11/20/2013
12:10:09 PM
...\Proj\66-0193_rdy_psh_s04.dgn

STATE OF NORTH CAROLINA
DIVISION OF HIGHWAYS

TRANSPORTATION MANAGEMENT PLAN

ONSLOW COUNTY

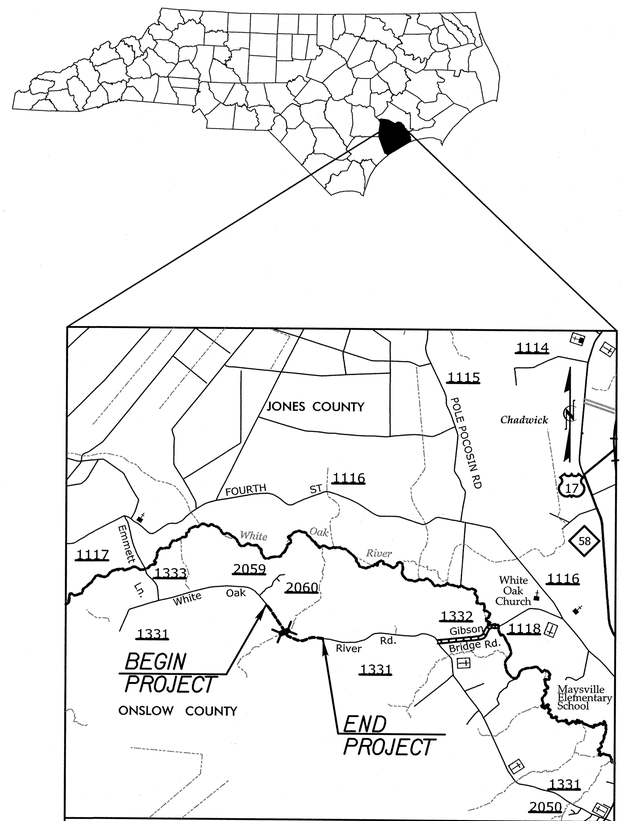

N.T.S.

VICINITY MAP ***ONSITE DETOUR***

INDEX OF SHEETS

SHEET NO.	TITLE
TMP-1	TITLE SHEET, INDEX OF SHEETS AND LIST OF APPLICABLE ROADWAY STANDARD DRAWINGS
TMP-1A	GENERAL NOTES
TMP-2	TEMPORARY CONCRETE BARRIER AT SHORING LOCATIONS
TMP-2A	RUMBLE STRIP DETAIL
TMP-3	PHASE I
TMP-4	PHASE II

ROADWAY STANDARD DRAWINGS

THE FOLLOWING ROADWAY STANDARDS AS SHOWN IN "ROADWAY STANDARD DRAWINGS" PROJECT SERVICES UNIT - N.C. DEPARTMENT OF TRANSPORTATION - RALEIGH, N.C. DATED JAN 2012 ARE APPLICABLE TO THIS PROJECT AND BY REFERENCE HEREBY ARE CONSIDERED A PART OF THESE PLANS:

STD. NO.	TITLE
1101.01	WORK ZONE ADVANCE WARNING SIGNS
1101.02	TEMPORARY LANE CLOSURES
1101.03	TEMPORARY ROAD CLOSURES
1101.11	TRAFFIC CONTROL DESIGN TABLES
1110.01	STATIONARY WORK ZONE SIGNS
1130.01	DRUMS
1145.01	BARRICADES
1150.01	FLAGGING DEVICES
1160.01	TEMPORARY CRASH CUSHION
1170.01	POSITIVE PROTECTION
1205.01	PAVEMENT MARKINGS - LINE TYPES & OFFSETS
1205.02	PAVEMENT MARKINGS - 2 LANE & MULTILANE ROADWAYS
1250.01	PAVEMENT MARKER SPACING
1251.01	RAISED PAVEMENT MARKERS - PERMANENT AND TEMPORARY
1261.01	GUARDRAIL AND BARRIER DELINEATOR SPACING
1261.02	GUARDRAIL AND BARRIER DELINEATOR TYPE
1262.01	GUARDRAIL END DELINEATION

HNTB

HNTB NORTH CAROLINA, P.C.
343 E. Six Forks Road, Suite 200
Raleigh, North Carolina 27609
NC License No: C-1554

R. B. EARLY, PE — *TRAFFIC CONTROL PROJECT ENGINEER*

J. A. PHILLIPS — *TRAFFIC CONTROL DESIGN ENGINEER*

APPROVED: Rhonda B. Early
DATE: 11.22.13

SEAL

NORTH CAROLINA PROFESSIONAL SEAL 023521 ENGINEER RHONDA B. EARLY

WORK ZONE SAFETY & MOBILITY
"from the MOUNTAINS to the COAST"

N.C.D.O.T. WORK ZONE TRAFFIC CONTROL
1561 MAIL SERVICE CENTER (MSC) RALEIGH, NC 27699-1561
750 N. GREENFIELD PARKWAY, GARNER, NC 27529 (DELIVERY)
PHONE: (919) 773-2800 FAX: (919) 771-2745

KATHERINE HITE, PE — *DIVISION TRAFFIC ENGINEER*

DIVISION OF HIGHWAYS * STATE OF NORTH CAROLINA * DEPARTMENT OF TRANSPORTATION * WORK ZONE TRAFFIC CONTROL

SHEET NO.
TMP-1

17BP.3.R.14

TIP PROJECT:

12:47:55 PM
...\TCP\BR193_tc_TCP_01_title.dgn
$$$$USERNAME$$$$

PROJ. REFERENCE NO.	SHEET NO.
17BP.3.R.14	TMP-1A

GENERAL NOTES

CHANGES MAY BE REQUIRED WHEN PHYSICAL DIMENSIONS IN THE DETAIL DRAWINGS, STANDARD DETAILS, AND ROADWAY DETAILS ARE NOT ATTAINABLE TO MEET FIELD CONDITIONS OR RESULT IN DUPLICATE OR UNDESIRED OVERLAPPING OF DEVICES. MODIFICATION MAY INCLUDE: MOVING, SUPPLEMENTING, COVERING, OR REMOVAL OF DEVICES AS DIRECTED BY THE ENGINEER.

THE FOLLOWING GENERAL NOTES APPLY AT ALL TIMES FOR THE DURATION OF THE CONSTRUCTION PROJECT EXCEPT WHEN OTHERWISE NOTED IN THE PLAN OR DIRECTED BY THE ENGINEER.

LANE AND SHOULDER CLOSURE REQUIREMENTS

A) REMOVE LANE CLOSURE DEVICES FROM THE LANE WHEN WORK IS NOT BEING PERFORMED BEHIND THE LANE CLOSURE OR WHEN A LANE CLOSURE IS NO LONGER NEEDED OR AS DIRECTED BY THE ENGINEER.

B) WHEN PERSONNEL AND/OR EQUIPMENT ARE WORKING WITHIN 15 FT OF AN OPEN TRAVEL LANE, CLOSE THE NEAREST OPEN SHOULDER USING ROADWAY STANDARD DRAWING NO. 1101.04 UNLESS THE WORK AREA IS PROTECTED BY BARRIER OR GUARDRAIL OR A LANE CLOSURE IS INSTALLED.

TRAFFIC PATTERN ALTERATIONS

C) NOTIFY THE ENGINEER TWENTY ONE (21) CALENDAR DAYS PRIOR TO ANY TRAFFIC PATTERN ALTERATION.

SIGNING

D) INSTALL ADVANCE WORK ZONE WARNING SIGNS WHEN WORK IS WITHIN 40 FT FROM THE EDGE OF TRAVEL LANE AND NO MORE THAN THREE (3) DAYS PRIOR TO THE BEGINNING OF CONSTRUCTION.

E) ENSURE ALL NECESSARY SIGNING IS IN PLACE PRIOR TO ALTERING ANY TRAFFIC PATTERN.

TRAFFIC CONTROL DEVICES

F) PLACE TYPE III BARRICADES, WITH "ROAD CLOSED" SIGN R11-2 ATTACHED, OF SUFFICIENT LENGTH TO CLOSE ENTIRE ROADWAY.

PAVEMENT MARKINGS AND MARKERS

G) INSTALL PAVEMENT MARKINGS ON THE FINAL SURFACE AS FOLLOWS:

ROAD NAME	MARKING	MARKERS
SR 1331 (WHITE OAK RIVER RD.)	PAINT	RAISED

H) TIE PROPOSED PAVEMENT MARKING LINES TO EXISTING PAVEMENT MARKING LINES.

I) REMOVE/REPLACE ANY CONFLICTING/DAMAGED PAVEMENT MARKINGS.

J) PASSING ZONE WILL BE DETERMINED IN THE FIELD AND MUST BE APPROVED BY THE ENGINEER.

REVISIONS

QA/QC STAGE:
REVIEW:
CONCUR:
REVISE:
VERIFY:

u:\90\DPM\DR193_tp_TCP_01_title.dgn
$$$$USERNAME$$$$

8/17/99

HNTB NORTH CAROLINA, P.C.
343 E. Six Forks Road, Suite 200
Raleigh, North Carolina 27609
NC License No: C-1554

APPROVED: Rhonda B. Early DATE: 11-22-19

SEAL

NORTH CAROLINA PROFESSIONAL SEAL 023521 ENGINEER RHONDA B. EARLY

DIVISION OF HIGHWAYS * STATE OF NORTH CAROLINA * DEPARTMENT OF TRANSPORTATION * WORK ZONE TRAFFIC CONTROL

TRANSPORTATION MANAGEMENT PLAN

GENERAL NOTES

PROJ. REFERENCE NO.	SHEET NO.
17BP.3.R.14	TMP-2

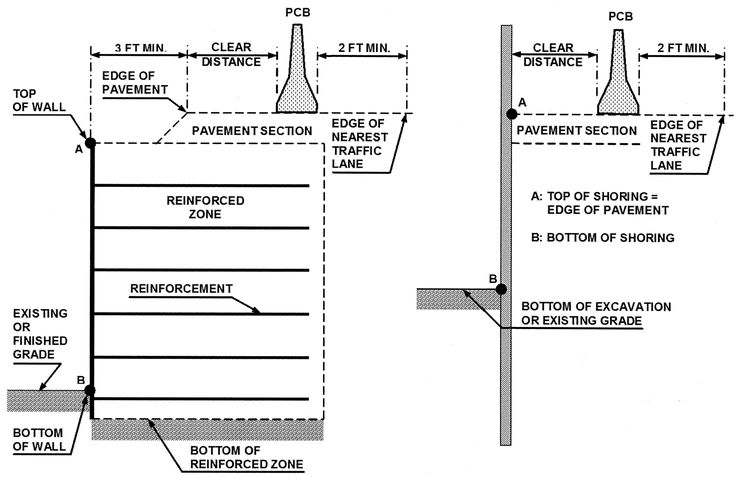

NOTE: WALL OR SHORING HEIGHT = A - B

FIGURE A

NOTES

1- REFER TO THE TRAFFIC CONTROL PLANS FOR TEMPORARY SHORING LOCATIONS AND NOTES.

2- REFER TO THE "TEMPORARY SHORING" PROJECT SPECIAL PROVISION FOR INFORMATION ABOUT TEMPORARY SHORING AND PORTABLE CONCRETE BARRIER (PCB).

3- PCB IS REQUIRED IF TEMPORARY SHORING IS LOCATED WITHIN THE CLEAR ZONE IN ACCORDANCE WITH THE AASHTO ROADSIDE DESIGN GUIDE. DO NOT PLACE BARRIER DIRECTLY ON ANY SURFACE OTHER THAN ASPHALT OR CONCRETE. (CONTACT NCDOT PAVEMENT MANAGEMENT UNIT FOR APPLICABLE PAVEMENT DESIGN).

4- BASED ON THE CLEAR DISTANCE, OFFSET, DESIGN SPEED AND PAVEMENT TYPE, CHOOSE AN UNANCHORED OR ANCHORED PCB FROM THE TABLE SHOWN IN FIGURE B. CLEAR DISTANCE IS DEFINED AS SHOWN IN FIGURE A AND OFFSET IS DEFINED AS SHOWN IN FIGURE B.

5- AT THE CONTRACTOR'S OPTION OR IF THE MINIMUM REQUIRED CLEAR DISTANCE IS NOT AVAILABLE, SET PCB NEXT TO AND UP AGAINST THE TRAFFIC SIDE OF THE TEMPORARY SHORING EXCEPT FOR BARRIER ABOVE TEMPORARY WALLS. PCB WITH THE MINIMUM REQUIRED CLEAR DISTANCE IS REQUIRED ABOVE TEMPORARY WALLS.

6- USE NCDOT PORTABLE CONCRETE BARRIER (PCB) IN ACCORDANCE WITH ROADWAY STANDARD DRAWING NO. 1170.01 AND SECTION 1170 OF THE STANDARD SPECIFICATIONS.

7- PCB REQUIREMENTS FOR TEMPORARY WALLS APPLY TO TEMPORARY MECHANICALLY STABILIZED EARTH (MSE) WALLS AND TEMPORARY SOIL NAIL WALLS.

8- SET PCB WITH A MINIMUM HORIZONTAL DISTANCE OF 2 FT BETWEEN THE FRONT FACE OF THE BARRIER AND THE EDGE OF THE NEAREST TRAFFIC LANE AS SHOWN IN FIGURE A UNLESS OTHERWISE SHOWN IN THE PLANS AND OR AS APPROVED BY THE ENGINEER.

9- FOR PCB ABOVE AND BEHIND TEMPORARY WALLS, PROVIDE A MINIMUM DISTANCE OF 3 FT BETWEEN THE EDGE OF PAVEMENT AND THE WALL FACE AS SHOWN IN FIGURE A. IF THESE MINIMUM REQUIRED DISTANCES ARE NOT AVAILABLE, CONTACT THE ENGINEER.

10- TABLE SHOWN IN FIGURE B IS BASED ON NCDOT RESEARCH PROJECT NO. 2005-010 WITH VEHICLE TYPE USED FOR NCHRP 350 CRASH TESTS. BARRIER DEFLECTIONS AND RESULTING MINIMUM REQUIRED CLEAR DISTANCES MIGHT VARY SIGNIFICANTLY FOR LARGER HEAVIER VEHICLES, RUNS OF BARRIER LESS THAN 200 FT IN LENGTH AND WET OR DRY PAVEMENT.

MINIMUM REQUIRED CLEAR DISTANCE, inches

Barrier Type	Pavement Type	Offset * ft	Design Speed, mph <30	31-40	41-50	51-60	61-70	71-80
Unanchored PCB	Asphalt	<8	24	26	29	32	36	40
		8-14	26	28	31	35	38	42
		14-20	27	29	34	36	39	43
		20-26	28	31	35	38	40	44
		26-32	29	32	36	39	42	45
		32-38	30	34	38	41	43	46
		38-44	31	34	41	43	45	48
		44-50	31	35	41	43	46	49
		50-56	32	36	42	44	47	50
		>56	32	36	42	45	47	51
	Concrete	<8	17	18	21	22	25	26
		8-14	19	20	23	25	26	29
		14-20	22	22	24	26	28	31
		20-26	23	24	26	27	30	34
		26-32	24	25	27	28	32	35
		32-38	24	26	27	30	33	36
		38-44	25	26	28	30	34	37
		44-50	26	26	28	32	35	37
		50-56	26	26	28	32	35	38
		>56	26	27	29	32	36	38
Anchored PCB	Asphalt	All Offsets	24 for All Design Speeds					
Anchored PCB	Concrete (including bridge approach slabs)	All Offsets	12 for All Design Speeds					

* See Figure Below

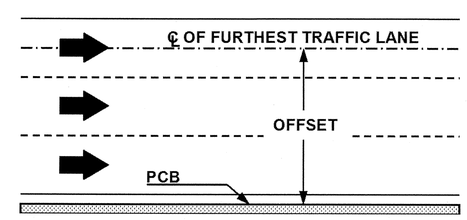

FIGURE B

APPROVED: Rhonda B. Early DATE: 11.22.13

SEAL

NORTH CAROLINA PROFESSIONAL SEAL 023521 ENGINEER RHONDA B. EARLY

DIVISION OF HIGHWAYS STATE OF NORTH CAROLINA DEPARTMENT OF TRANSPORTATION WORK ZONE TRAFFIC CONTROL

TRANSPORTATION MANAGEMENT PLAN
PORTABLE CONCRETE BARRIER
AT
TEMPORARY SHORING LOCATIONS

8/17/99

REVISIONS

QA/QC STAGE:

REVIEW:
CONCUR:
REVISE:
VERIFY:

12:58:49 PM
$$$$USERNAME$$$$
$$$$DATE$$$$
TMP_PCB_AT_SHORING.dgn

PROJ. REFERENCE NO.	SHEET NO.
17BP.3.R.14	TMP-2A

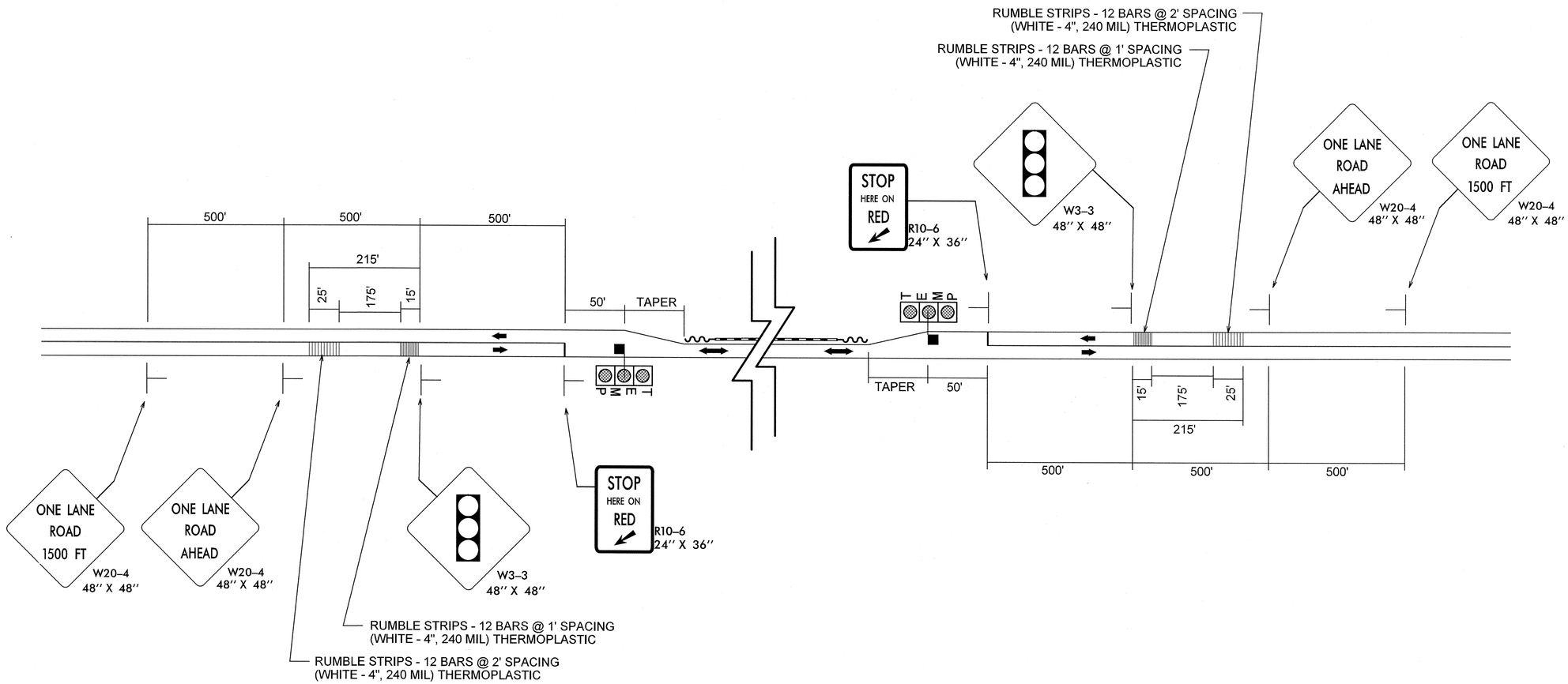

GENERAL NOTES:

1. TEMPORARY RUMBLE STRIP ARRAYS TO BE PLACED IN ADVANCE OF EACH TEMPORARY SIGNAL STATION.
2. TEMPORARY RUMBLE STRIPS ARE USED TO SUPPLEMENT A SERIES OF ADVANCED WARNING SIGNS AND SHALL BE INSTALLED AND REMOVED WHEN THE SIGNS ARE INSTALLED AND REMOVED.
3. REMOVE THE TEMPORARY RUMBLE STRIPS PRIOR TO REMOVING THE ASSOCIATED WARNING SIGNS.

HNTB
HNTB NORTH CAROLINA, P.C.
343 E. Six Forks Road, Suite 200
Raleigh, North Carolina 27609
NC License No: C-1554

APPROVED: Rhonda B. Early DATE: 11-22-13

SEAL

NORTH CAROLINA PROFESSIONAL SEAL 023521 ENGINEER RHONDA B. EARLY

DIVISION OF HIGHWAYS * STATE OF NORTH CAROLINA * DEPARTMENT OF TRANSPORTATION * WORK ZONE TRAFFIC CONTROL

TRANSPORTATION MANAGEMENT PLAN

RUMBLE STRIP DETAIL

8/17/99

REVISIONS

QA/QC STAGE:

REVIEW:

CONCUR:

REVISE:

VERIFY:

4:40:35 PM
C:\Bentley\Projects\TMP 02A rumble strips.dgn
$$$$USERNAME$$$$

PROJ. REFERENCE NO.	SHEET NO.
17BP.3.R.14	TMP-3

PHASING

NOTES:

REPLACE MARKINGS AND RETURN TRAFFIC TO THE CURRENT TRAFFIC PATTERN AT THE END OF EACH WORK PERIOD UNLESS OTHERWISE NOTED IN THE PHASING OR DIRECTED BY THE ENGINEER.

MAINTAIN VEHICULAR ACCESS TO ALL RESIDENCES AND BUSINESSES DURING THE LIFE OF THE CONTRACT UNLESS OTHERWISE NOTED IN THE PHASING OR DIRECTED BY THE ENGINEER.

COMPLETE ANY PROPOSED WIDENING IN SUCH A MANNER THAT PONDING OF WATER WILL NOT OCCUR IN THE TRAVEL LANE. THIS MAY REQUIRE A COMBINATION OF INSTALLATION OF PROPOSED PIPES, TEMPORARY PIPES, STEEL PLATES, AND TEMPORARY MEDIAN AND OUTSIDE DITCHES.

THE TERM RSD DENOTES "ROADWAY STANDARD DRAWING".

PHASE I

STEP 1: INSTALL WORK ZONE ADVANCE WARNING SIGNS ON -L- (SR 1331), ACCORDING TO RSD 1101.01.

STEP 2: AWAY FROM TRAFFIC, CONSTRUCT 31.5′ OF PROPOSED CULVERT AND TEMPORARY HEADWALL AS SHOWN IN EROSION CONTROL PLANS AND BELOW.

USING RSD 1101.02 (SHEET 1 OF 15) AS NEEDED, CONSTRUCT PROPOSED -L- FROM STA 14+50+/- TO STA 20+00+/- UP TO BUT NOT INCLUDING FINAL LAYER OF SURFACE COURSE. NOTE: THE FULL WIDTH OF PROPOSED PAVEMENT CANNOT BE CONSTRUCTED AT THIS TIME. A MINIMUM OF XX′ MUST BE CONSTRUCTED AT THIS TIME.

USING RSD 1101.02 (SHEET 1 OF 15), CONSTRUCT PROPOSED -L- FROM STA 11+75+/- TO STA 14+50+/- UP TO BUT NOT INCLUDING FINAL LAYER OF SURFACE COURSE.

AWAY FROM TRAFFIC, INSTALL PROPOSED PCB W/ CRASH CUSHIONS ON -L- FROM STA 16+25+/- TO STA 19+50+/- (LEFT).

STEP 3: USING RSD 1101.02 (SHEET 1 OF 15), MILL AND CONSTRUCT PROPOSED -L- FROM STA 21+00+/- TO 23+00+/- UP TO BUT NOT INCLUDING FINAL LAYER OF SURFACE COURSE.

STEP 4: WORKING IN A CONTINUOUS MANNER WITHOUT CEASING, USE RSD 1101.02 (SHEET 1 OF 15) TO SHIFT TRAFFIC TO LEFT SIDE OF EXISTING ROAD AND CONSTRUCT PROPOSED -L- FROM STA 20+00+/- TO STA 21+00+/-. PLACE TEMPORARY PAVEMENT MARKING ON -L- AS SHOWN IN PHASE II (SHEET TMP-4). INSTALL TEMPORARY SIGNALS AND TEMPORARY RUMBLE STRIPS AND SHIFT TRAFFIC TO NEW ALIGNMENT.

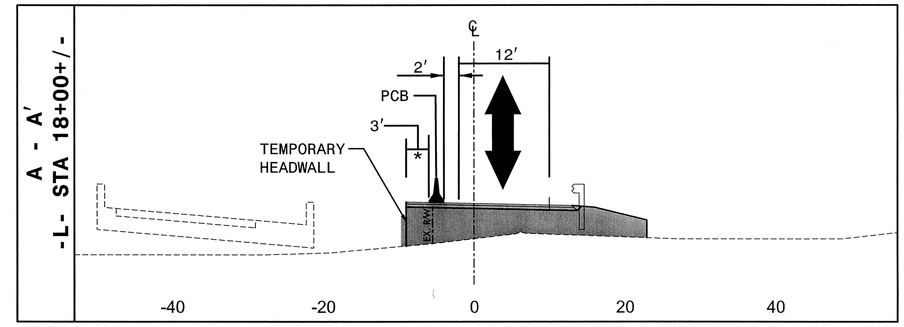

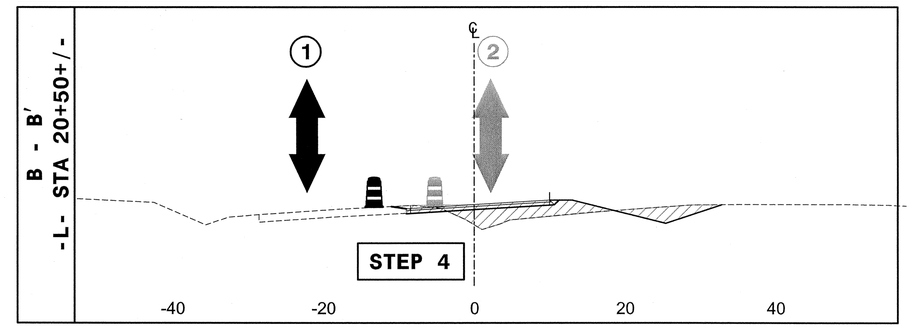

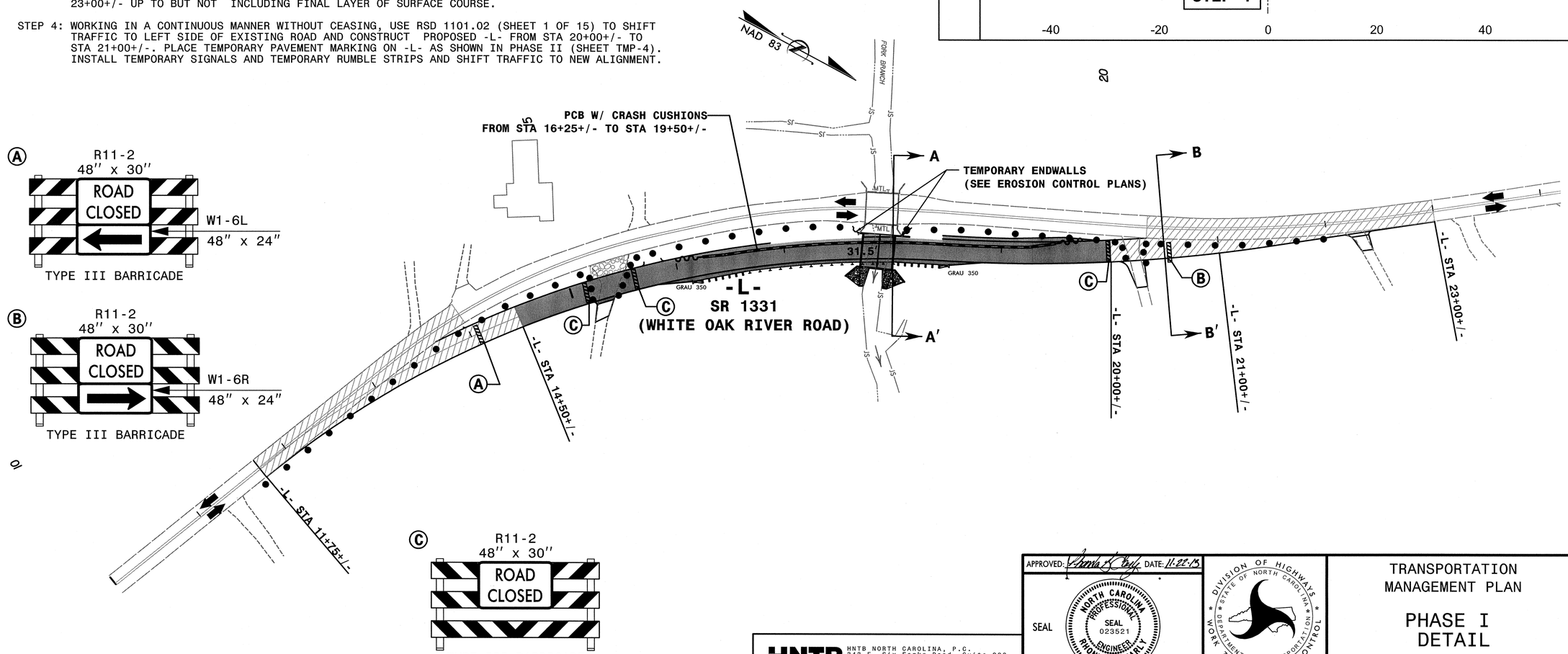

HNTB NORTH CAROLINA, P.C.
343 E. Six Forks Road, Suite 200
Raleigh, North Carolina 27609
NC License No: C-1554

APPROVED: Rhonda B. Early DATE: 11-22-13

SEAL

NORTH CAROLINA PROFESSIONAL SEAL 023521 ENGINEER RHONDA B. EARLY

DIVISION OF HIGHWAYS * STATE OF NORTH CAROLINA * DEPARTMENT OF TRANSPORTATION * WORK ZONE TRAFFIC CONTROL

TRANSPORTATION MANAGEMENT PLAN

PHASE I DETAIL

REVISIONS

8/17/99

QA/QC STAGE:

REVIEW:
CONCUR:
REVISE:
VERIFY:

12:45:52 PM
$$$$USERNAME$$$$
$$$$USERPROJECT$$$$

PROJ. REFERENCE NO.	SHEET NO.
17BP.3.R.14	TMP-4

PHASING

NOTES:

REPLACE MARKINGS AND RETURN TRAFFIC TO THE CURRENT TRAFFIC PATTERN AT THE END OF EACH WORK PERIOD UNLESS OTHERWISE NOTED IN THE PHASING OR DIRECTED BY THE ENGINEER.

MAINTAIN VEHICULAR ACCESS TO ALL RESIDENCES AND BUSINESSES DURING THE LIFE OF THE CONTRACT UNLESS OTHERWISE NOTED IN THE PHASING OR DIRECTED BY THE ENGINEER.

COMPLETE ANY PROPOSED WIDENING IN SUCH A MANNER THAT PONDING OF WATER WILL NOT OCCUR IN THE TRAVEL LANE. THIS MAY REQUIRE A COMBINATION OF INSTALLATION OF PROPOSED PIPES, TEMPORARY PIPES, STEEL PLATES, AND TEMPORARY MEDIAN AND OUTSIDE DITCHES.

THE TERM RSD DENOTES "ROADWAY STANDARD DRAWING".

PHASE II

STEP 1: AWAY FROM TRAFFIC, REMOVE EXISTING BRIDGE, COMPLETE PROPOSED CULVERT AND REMOVE TEMPORARY HEADWALL AS SHOWN IN EROSION CONTROL PLANS AND BELOW.

STEP 2: AWAY FROM TRAFFIC, CONSTRUCT PROPOSED -L- FROM STA 16+88+/- TO STA 18+46+/- UP TO BUT NOT INCLUDING FINAL LAYER OF SURFACE COURSE.

STEP 3: USING RSD 1101.02 (SHEET 1 OF 15) AS NEEDED, REMOVE ABANDONED ROADBED AND COMPLETE REMAINING SHOULDER CONSTRUCTION.

STEP 4: USING RSD 1101.02 (SHEET 1 OF 15), REMOVE PCB PLACED IN PHASE I, STEP 2.

STEP 5: USING RSD 1101.02 (SHEET 1 OF 15), PLACE FINAL LAYER OF SURFACE COURSE, AND FINAL PAVEMENT MARKING & MARKERS FOR TWO-LANE TWO-WAY PATTERN. REMOVE TEMPORARY SIGNALS, SIGNS AND DEVICES AND OPEN -L- TO FINAL PATTERN.

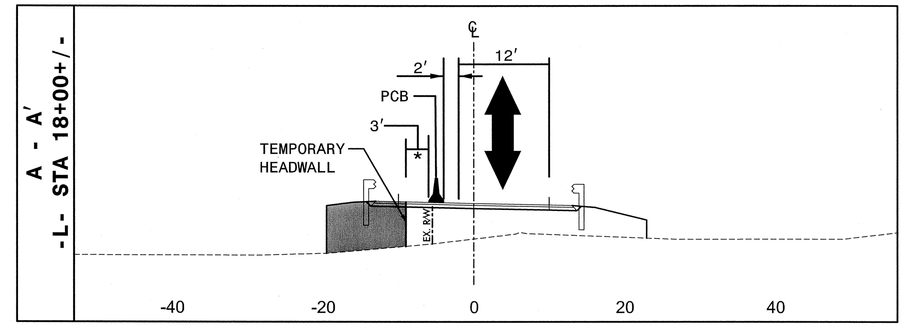

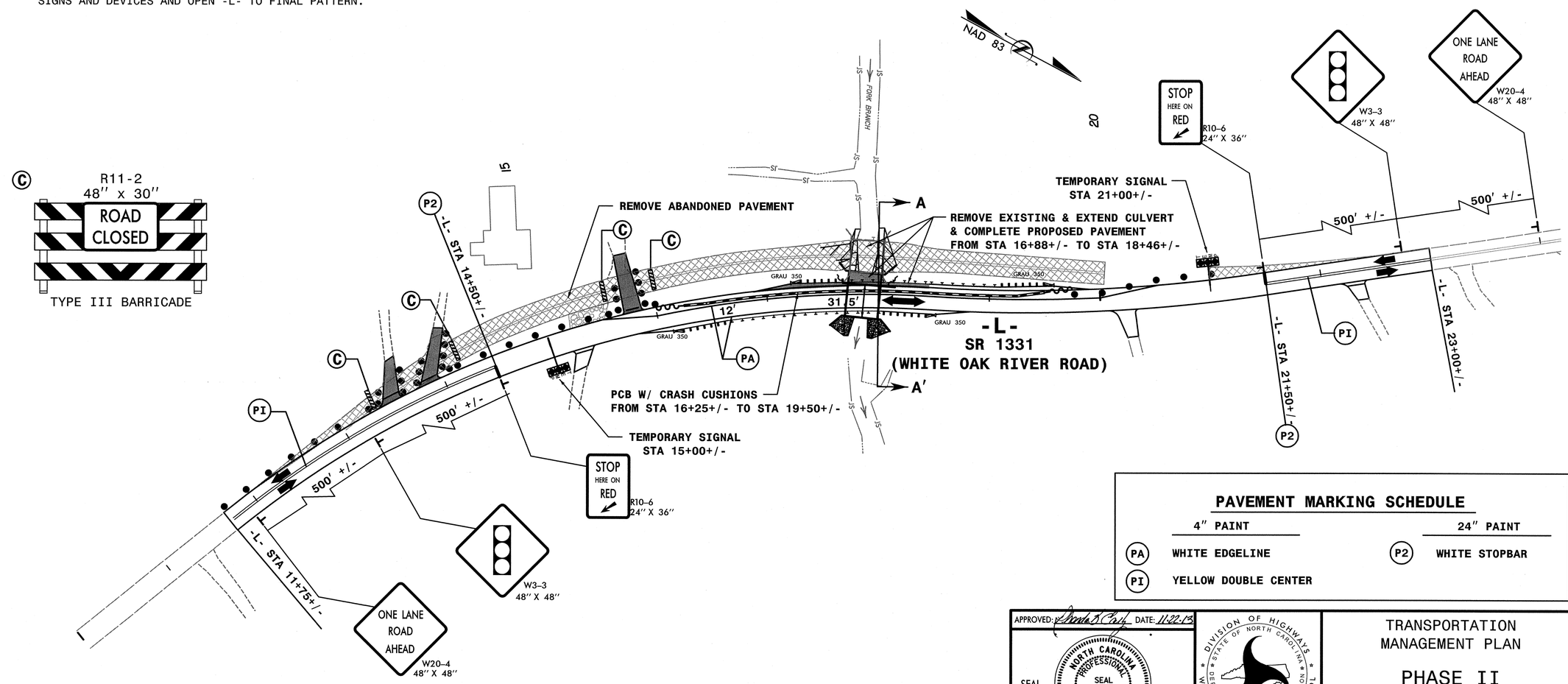

PAVEMENT MARKING SCHEDULE

	4" PAINT		24" PAINT
PA	WHITE EDGELINE	P2	WHITE STOPBAR
PI	YELLOW DOUBLE CENTER		

APPROVED: DATE: 11-22-13

SEAL

NORTH CAROLINA PROFESSIONAL SEAL 023521 ENGINEER RHONDA B. EARLY

DIVISION OF HIGHWAYS STATE OF NORTH CAROLINA DEPARTMENT OF TRANSPORTATION WORK ZONE TRAFFIC CONTROL

TRANSPORTATION MANAGEMENT PLAN

PHASE II DETAIL

HNTB NORTH CAROLINA, P.C.
343 E. Six Forks Road, Suite 200
Raleigh, North Carolina 27609
NC License No: C-1554

REVISIONS

8/17/99

QA/QC STAGE:

REVIEW:
CONCUR:
REVISE:
VERIFY:

12:52:46 PM
$$$$USERNAME$$$$
$$$$DATE$$$$
P1D2.dgn

TIP PROJECT: 17BP.3.R.14

STATE	STATE PROJECT REFERENCE NO.	SHEET NO.	TOTAL SHEETS
N.C.	17BP.3.R.14	EC-1	8

STATE PROJ. NO.	F.A. PROJ. NO.	DESCRIPTION

STATE OF NORTH CAROLINA
DIVISION OF HIGHWAYS

PLAN FOR PROPOSED
HIGHWAY EROSION CONTROL

LOCATION: ONSLOW COUNTY BRIDGE NO. 193 OVER UT TO FORK BRANCH ON SR 1331 (WHITE OAK RIVER RD.)

TYPE OF WORK: LOW IMPACT BRIDGE REPLACEMENT

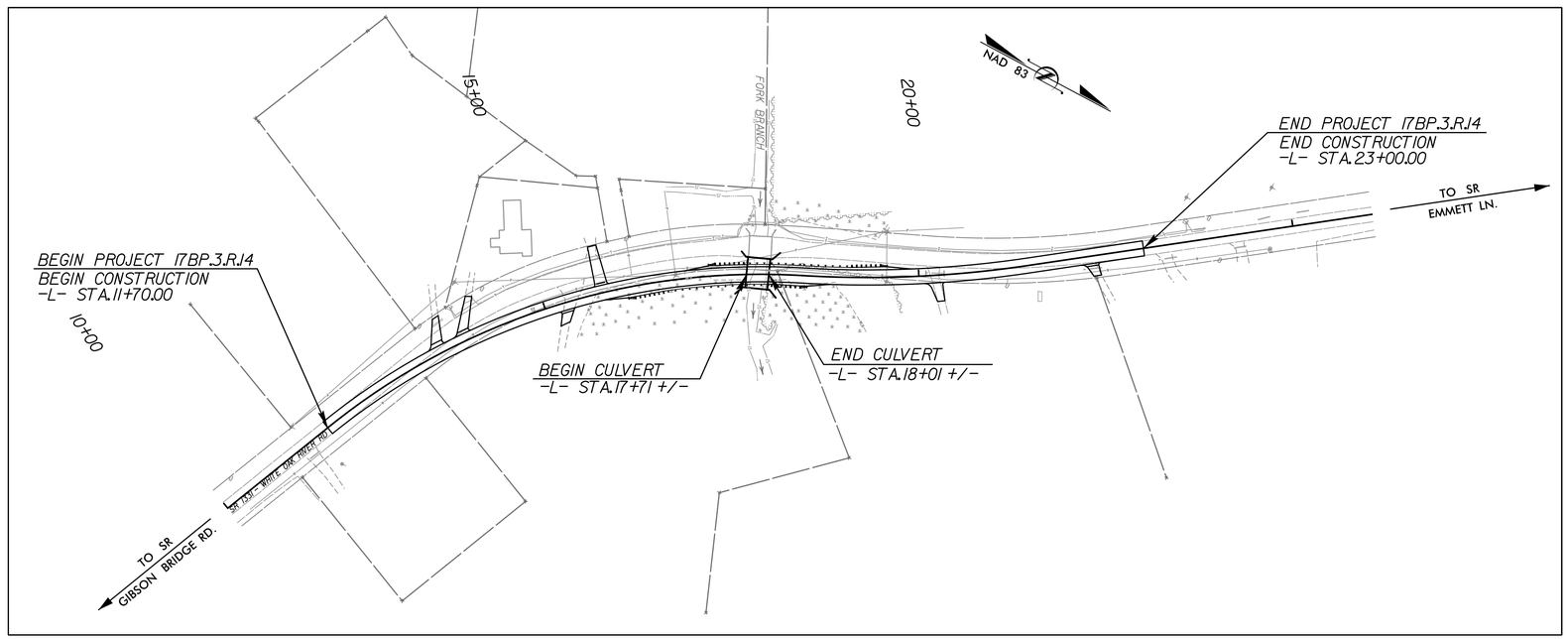

EROSION AND SEDIMENT CONTROL MEASURES

Std. #	Description	Symbol
1630.03	Temporary Silt Ditch	TSD
1630.05	Temporary Diversion	TD
1605.01	Temporary Silt Fence	
1606.01	Special Sediment Control Fence	
1622.01	Temporary Berms and Slope Drains	
	Silt Basin Type B	
1633.01	Temporary Rock Silt Check Type-A	
	Temporary Rock Silt Check Type-A with Matting and Polyacrylamide (PAM)	
	Temporary Rock Silt Check Type-B	
	Wattle / Coir Fiber Wattle	
	Wattle / Coir Fiber Wattle with Polyacrylamide (PAM)	
1634.01	Temporary Rock Sediment Dam Type-A	
1634.02	Temporary Rock Sediment Dam Type-B	
1635.01	Rock Pipe Inlet Sediment Trap Type-A	
1635.02	Rock Pipe Inlet Sediment Trap Type-B	
1630.04	Stilling Basin	
1630.06	Special Stilling Basin	
	Rock Inlet Sediment Trap:	
1632.01	Type A	A
1632.02	Type B	B
1632.03	Type C	C
	Skimmer Basin	
	Tiered Skimmer Basin	
	Infiltration Basin	

THIS PROJECT CONTAINS EROSION CONTROL PLANS FOR CLEARING AND GRUBBING PHASE OF CONSTRUCTION.

GRAPHIC SCALE

0
PLANS

0
PROFILE (HORIZONTAL)

0
PROFILE (VERTICAL)

ROADSIDE ENVIRONMENTAL UNIT
DIVISION OF HIGHWAYS
STATE OF NORTH CAROLINA

THESE EROSION AND SEDIMENT CONTROL PLANS COMPLY WITH THE REGULATIONS SET FORTH BY THE NCG-010000 GENERAL CONSTRUCTION PERMIT EFFECTIVE AUGUST 3, 2011 ISSUED BY THE NORTH CAROLINA DEPARTMENT OF ENVIRONMENT AND NATURAL RESOURCES DIVISION OF WATER QUALITY.

Prepared in the Office of:

HNTB NORTH CAROLINA, P.C.
343 E. Six Forks Road, Suite 200
Raleigh, North Carolina 27609
NC License No: C-1554

2012 STANDARD SPECIFICATIONS

PHILLIP E. ROGERS, P.E.
EROSION CONTROL
LEVEL III-A
CERTIFICATION #330

Roadway Standard Drawings

The following roadway english standards as appear in "Roadway Standard Drawings"– Roadway Design Unit – N. C. Department of Transportation – Raleigh, N. C., dated January 2012 and the latest revison thereto are applicable to this project and by reference hereby are considered a part of these plans.

1604.01	Railroad Erosion Control Detail	1632.01	Rock Inlet Sediment Trap Type A
1605.01	Temporary Silt Fence	1632.02	Rock Inlet Sediment Trap Type B
1606.01	Special Sediment Control Fence	1632.03	Rock Inlet Sediment Trap Type C
1607.01	Gravel Construction Entrance	1633.01	Temporary Rock Silt Check Type A
1622.01	Temporary Berms and Slope Drains	1633.02	Temporary Rock Silt Check Type B
1630.01	Riser Basin	1634.01	Temporary Rock Sediment Dam Type A
1630.02	Silt Basin Type B	1634.02	Temporary Rock Sediment Dam Type B
1630.03	Temporary Silt Ditch	1635.01	Rock Pipe Inlet Sediment Trap Type A
1630.04	Stilling Basin	1635.02	Rock Pipe Inlet Sediment Trap Type B
1630.05	Temporary Diversion	1640.01	Coir Fiber Baffle
1630.06	Special Stilling Basin	1645.01	Temporary Stream Crossing
1631.01	Matting Installation		

10:11:12 AM
$$$$USERNAME$$$$

COIR FIBER WATTLE DETAIL

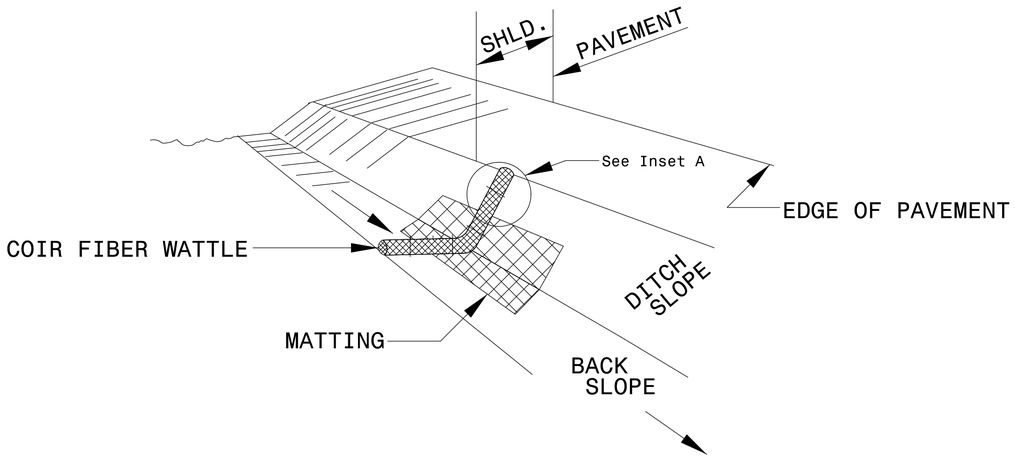

ISOMETRIC VIEW

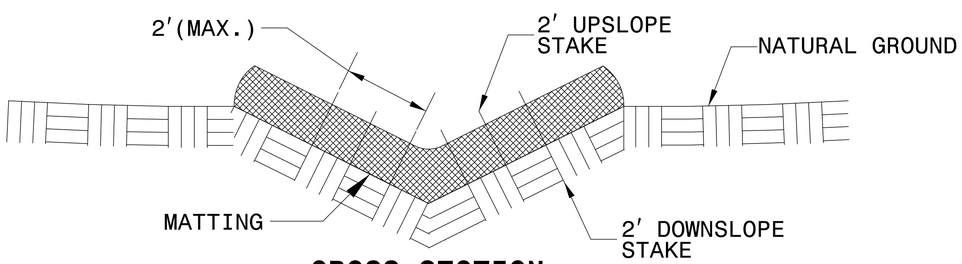

CROSS SECTION VEE DITCH

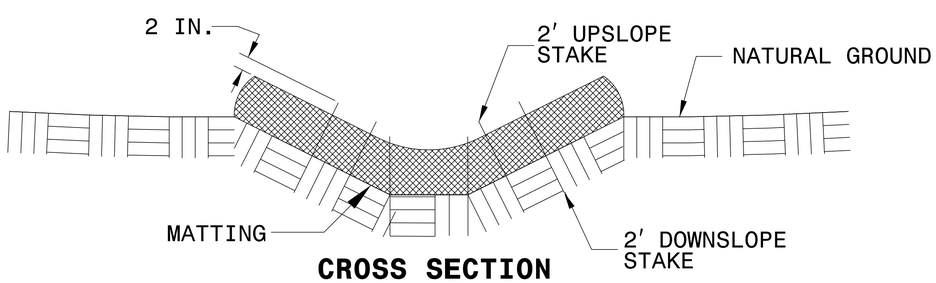

CROSS SECTION TRAPEZOIDAL DITCH

NOTES:

USE MINIMUM 12 IN. DIAMETER COIR FIBER (COCONUT FIBER) WATTLE.

USE 2 FT. WOODEN STAKES WITH A 2 IN. BY 2 IN. NOMINAL CROSS SECTION.

ONLY INSTALL WATTLE(S) TO A HEIGHT IN DITCH SO FLOW WILL NOT WASH AROUND WATTLE AND SCOUR DITCH SLOPES AND AS DIRECTED.

INSTALL A MINIMUM OF 2 UPSLOPE STAKES AND 4 DOWNSLOPE STAKES AT AN ANGLE TO WEDGE WATTLE TO BOTTOM OF DITCH.

PROVIDE STAPLES MADE OF 0.125 IN. DIAMETER STEEL WIRE FORMED INTO A U SHAPE NOT LESS THAN 12″ IN LENGTH.

INSTALL STAPLES APPROXIMATELY EVERY 1 LINEAR FOOT ON BOTH SIDES OF WATTLE AND AT EACH END TO SECURE IT TO THE SOIL.

INSTALL MATTING IN ACCORDANCE WITH SECTION 1631 OF THE STANDARD SPECIFICATIONS.

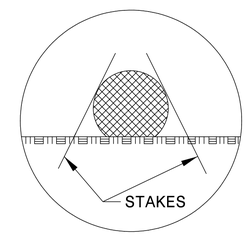

INSET A

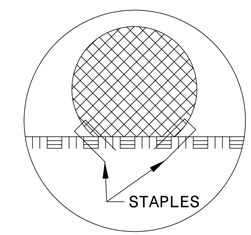

INSET B

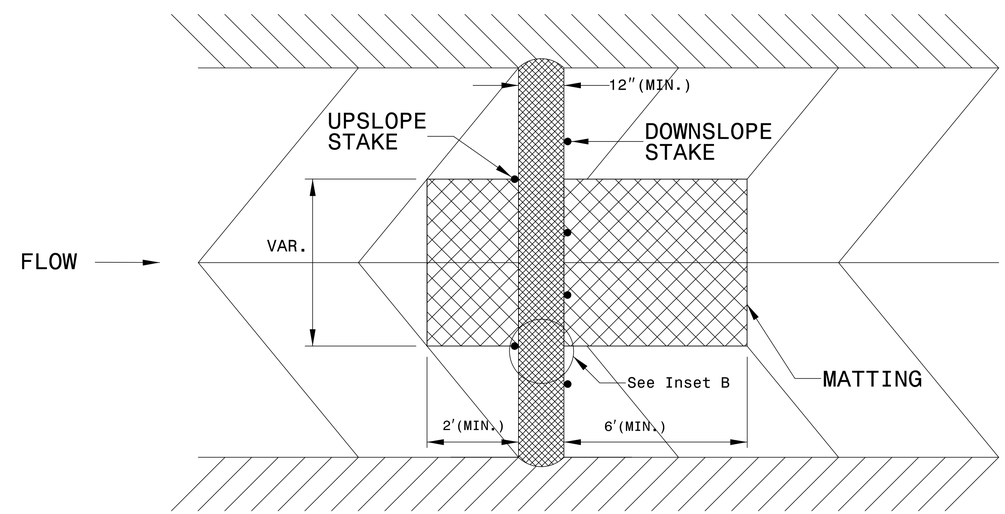

TOP VIEW

6/2/99
10:43:35 AM
$$$$USERNAME$$$$

PROJECT REFERENCE NO.	SHEET NO.
17BP.3.R.14	EC-3

COIR FIBER WATTLE WITH POLYACRYLAMIDE (PAM) DETAIL

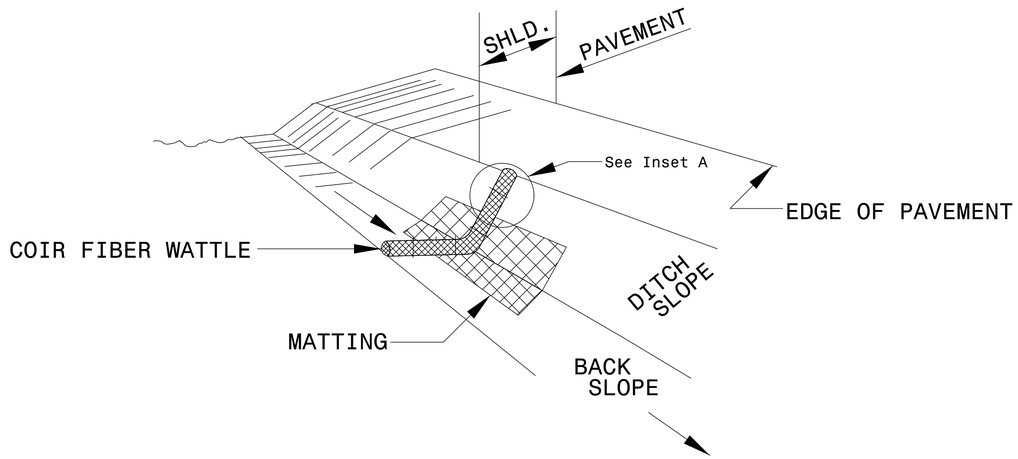

ISOMETRIC VIEW

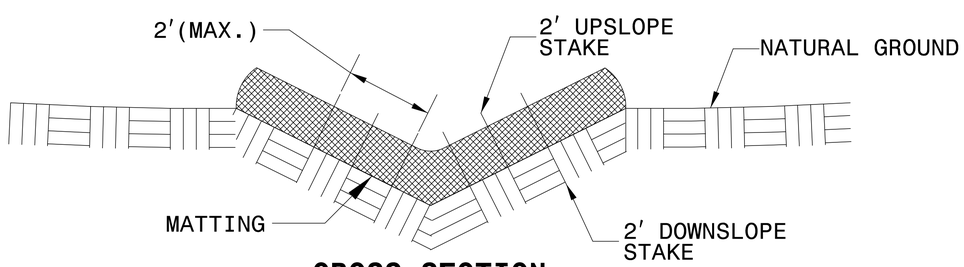

CROSS SECTION VEE DITCH

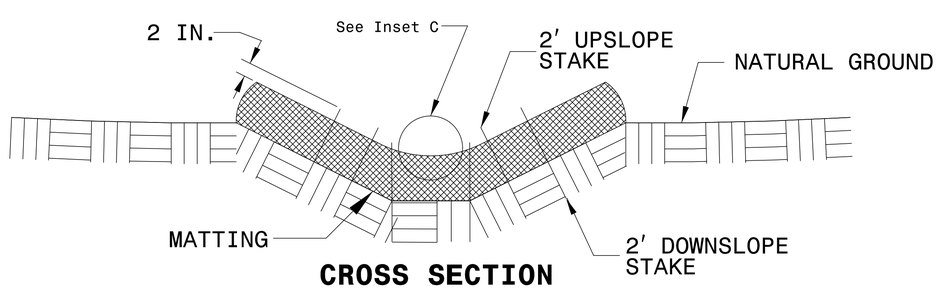

CROSS SECTION TRAPEZOIDAL DITCH

NOTES:

USE MINIMUM 12 IN. DIAMETER COIR FIBER (COCONUT FIBER) WATTLE.

USE 2 FT. WOODEN STAKES WITH A 2 IN. BY 2 IN. NOMINAL CROSS SECTION.

ONLY INSTALL WATTLE(S) TO A HEIGHT IN DITCH SO FLOW WILL NOT WASH AROUND WATTLE AND SCOUR DITCH SLOPES AND AS DIRECTED.

INSTALL A MINIMUM OF 2 UPSLOPE STAKES AND 4 DOWNSLOPE STAKES AT AN ANGLE TO WEDGE WATTLE TO BOTTOM OF DITCH.

PROVIDE STAPLES MADE OF 0.125 IN. DIAMETER STEEL WIRE FORMED INTO A U SHAPE NOT LESS THAN 12" IN LENGTH.

INSTALL STAPLES APPROXIMATELY EVERY 1 LINEAR FOOT ON BOTH SIDES OF WATTLE AND AT EACH END TO SECURE IT TO THE SOIL.

INSTALL MATTING IN ACCORDANCE WITH SECTION 1631 OF THE STANDARD SPECIFICATIONS.

PRIOR TO POLYACRYLAMIDE (PAM) APPLICATION, OBTAIN A SOIL SAMPLE FROM PROJECT LOCATION, AND FROM OFFSITE MATERIAL, AND ANALYZE FOR APPROPRIATE PAM FLOCCULANT TO BE APPLIED TO EACH WATTLE.

INITIALLY APPLY 2 OUNCES OF ANIONIC OR NEUTRALLY CHARGED PAM OVER WATTLE WHERE WATER WILL FLOW AND 1 OUNCE OF PAM ON MATTING ON EACH SIDE OF WATTLE. REAPPLY PAM AFTER EVERY RAINFALL EVENT THAT IS EQUAL TO OR EXCEEDS 0.50 IN.

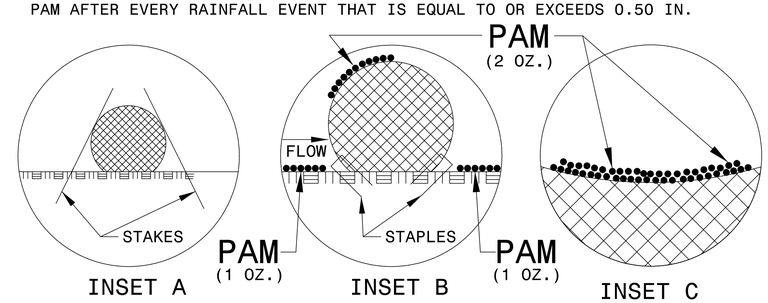

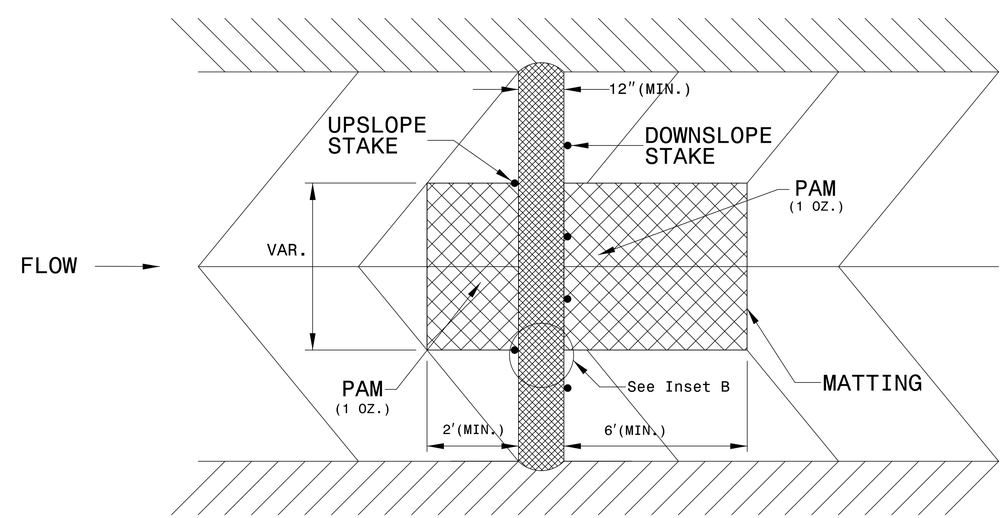

TOP VIEW

6/2/99

10:38 AM
jobnamo.ec_detail.dgn
$$$$USERNAME$$$$

PROJECT REFERENCE NO.	SHEET NO.
17BP.3.R.14	EC-4

SILT FENCE COIR FIBER WATTLE BREAK DETAIL

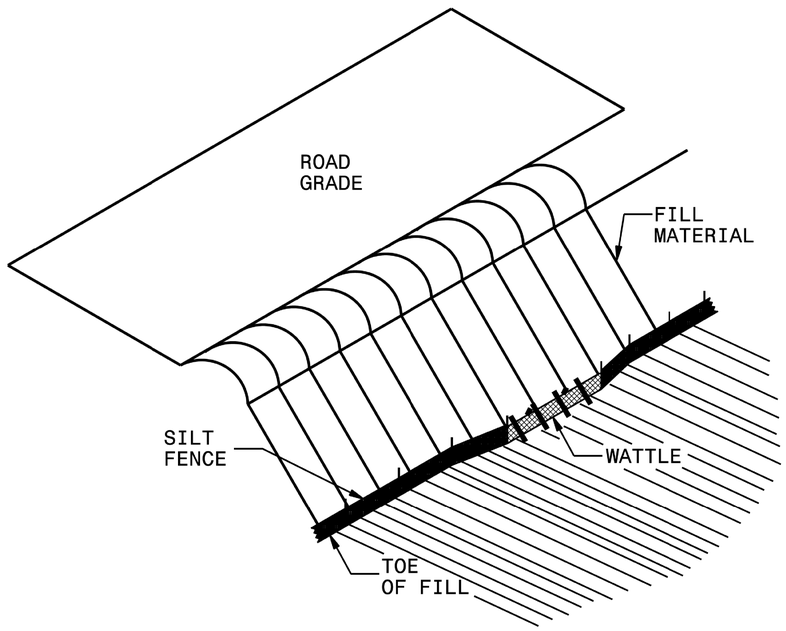

ISOMETRIC VIEW

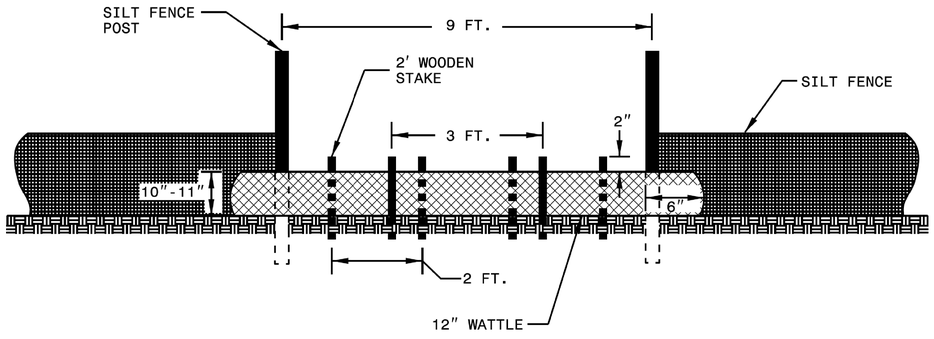

VIEW FROM SLOPE

NOTES:

USE MINIMUM 12 IN. DIAMETER COIR FIBER (COCONUT FIBER) WATTLE AND LENGTH OF 10 FT.

EXCAVATE A 1 TO 2 INCH TRENCH FOR WATTLE TO BE PLACED.

DO NOT PLACE WATTLE ON TOE OF SLOPE.

USE 2 FT. WOODEN STAKES WITH A 2 IN. BY 2 IN. NOMINAL CROSS SECTION.

INSTALL A MINIMUM OF 2 UPSLOPE STAKES AND 4 DOWNSLOPE STAKES AT AN ANGLE TO WEDGE WATTLE TO GROUND.

PROVIDE STAPLES MADE OF 0.125 IN. DIAMETER STEEL WIRE FORMED INTO A U SHAPE NOT LESS THAN 12" IN LENGTH.

INSTALL STAPLES APPROXIMATELY EVERY 1 LINEAR FOOT ON BOTH SIDES OF WATTLE AND AT EACH END TO SECURE IT TO THE SOIL.

WATTLE INSTALLATION CAN BE ON OUTSIDE OF THE SILT FENCE AS DIRECTED.

INSTALL TEMPORARY SILT FENCE IN ACCORDANCE WITH SECTION 1605 OF THE STANDARD SPECIFICATIONS.

INSET A

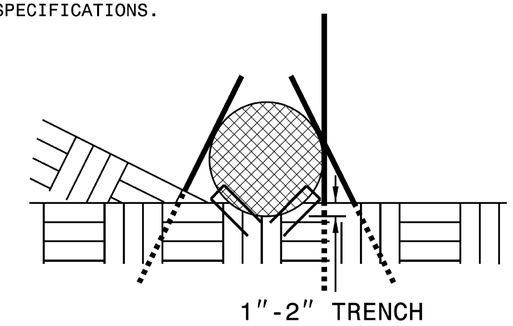

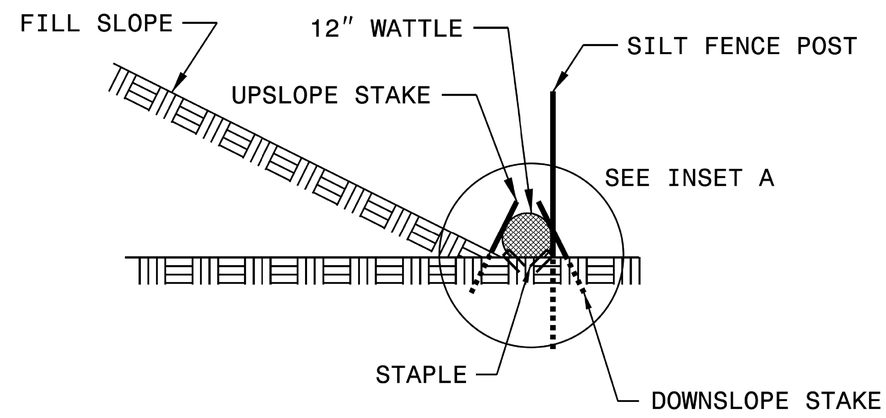

SIDE VIEW

DIVISION OF HIGHWAYS
STATE OF NORTH CAROLINA

SOIL STABILIZATION TIMEFRAMES

SITE DESCRIPTION	STABILIZATION TIME	TIMEFRAME EXCEPTIONS
PERIMETER DIKES, SWALES, DITCHES AND SLOPES	7 DAYS	NONE
HIGH QUALITY WATER (HQW) ZONES	7 DAYS	NONE
SLOPES STEEPER THAN 3:1	7 DAYS	IF SLOPES ARE 10' OR LESS IN LENGTH AND ARE NOT STEEPER THAN 2:1, 14 DAYS ARE ALLOWED.
SLOPES 3:1 OR FLATTER	14 DAYS	7 DAYS FOR SLOPES GREATER THAN 50' IN LENGTH.
ALL OTHER AREAS WITH SLOPES FLATTER THAN 4:1	14 DAYS	NONE, EXCEPT FOR PERIMETERS AND HQW ZONES.

CLEARING & GRUBBING PLAN

HNTB NORTH CAROLINA, P.C.
343 E. Six Forks Road, Suite 200
Raleigh, North Carolina 27609
NC License No: C-1554

PROJECT REFERENCE NO.	SHEET NO.
17BP.3.R.14	EC-6
R/W SHEET NO.	

PHILLIP E. ROGERS, P.E.
EROSION CONTROL
LEVEL III-A
CERTIFICATION #330

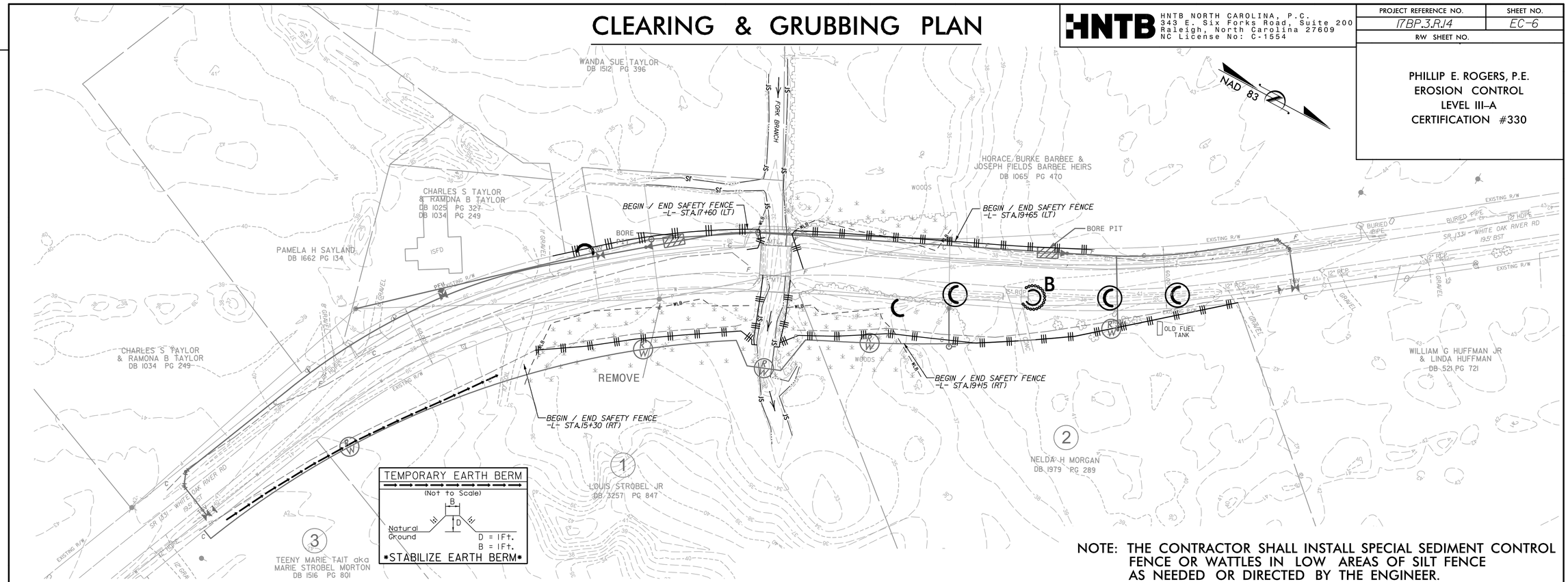

NOTE: THE CONTRACTOR SHALL INSTALL SPECIAL SEDIMENT CONTROL FENCE OR WATTLES IN LOW AREAS OF SILT FENCE AS NEEDED OR DIRECTED BY THE ENGINEER.

PROFILE

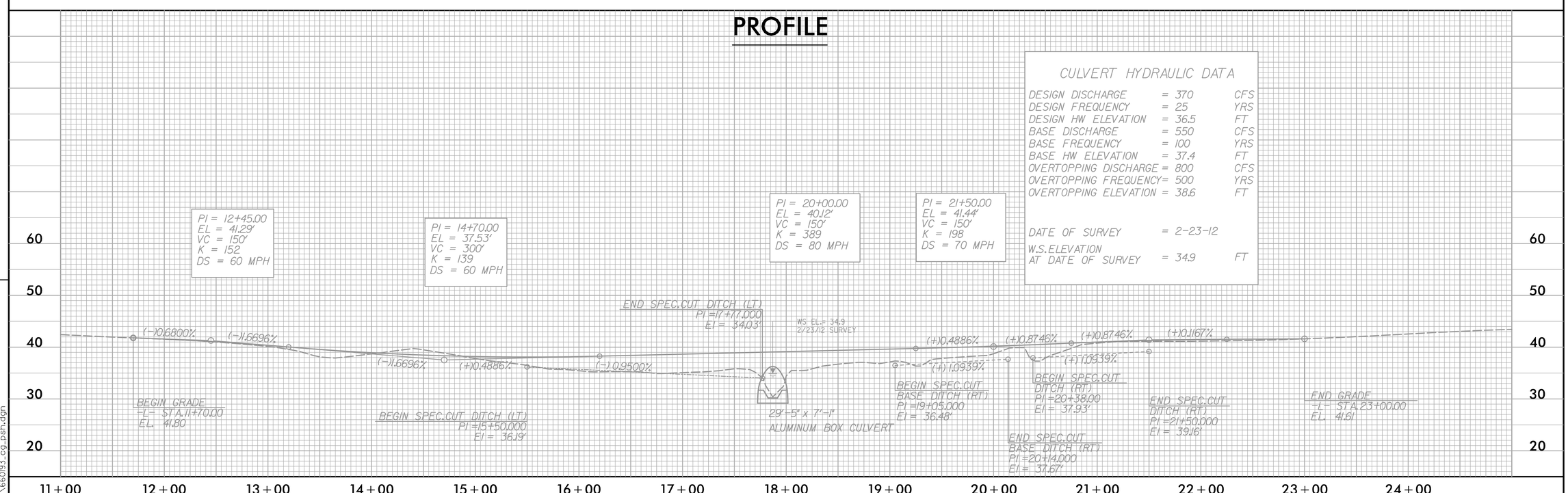

CULVERT HYDRAULIC DATA

DESIGN DISCHARGE	= 370	CFS
DESIGN FREQUENCY	= 25	YRS
DESIGN HW ELEVATION	= 36.5	FT
BASE DISCHARGE	= 550	CFS
BASE FREQUENCY	= 100	YRS
BASE HW ELEVATION	= 37.4	FT
OVERTOPPING DISCHARGE	= 800	CFS
OVERTOPPING FREQUENCY	= 500	YRS
OVERTOPPING ELEVATION	= 38.6	FT
DATE OF SURVEY	= 2-23-12	
W.S.ELEVATION AT DATE OF SURVEY	= 34.9	FT

REVISIONS

11/13/2013
3:44:19 PM
...\660193_cg_psh.dgn

EROSION CONTROL PLAN

HNTB NORTH CAROLINA, P.C.
343 E. Six Forks Road, Suite 200
Raleigh, North Carolina 27609
NC License No: C-1554

PROJECT REFERENCE NO.	SHEET NO.
17BP.3.R.14	EC-7
R/W SHEET NO.	

PHILLIP E. ROGERS, P.E.
EROSION CONTROL
LEVEL III-A
CERTIFICATION #330

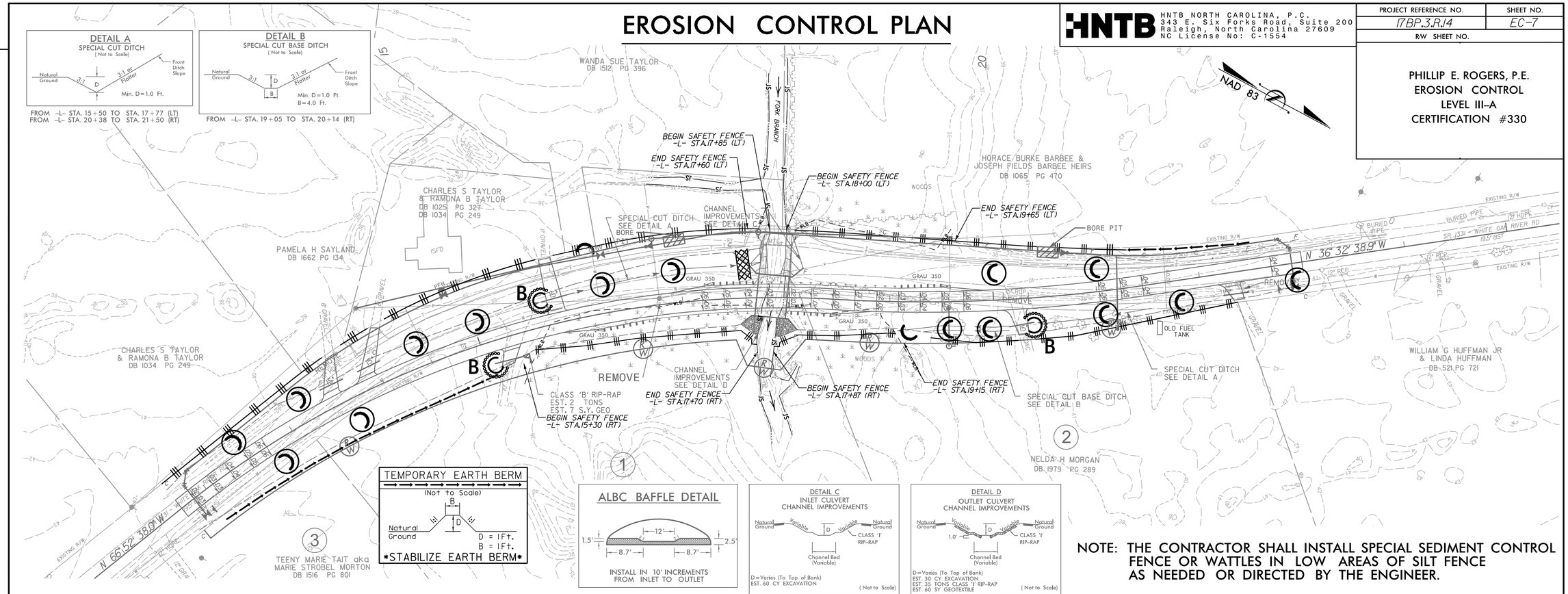

NOTE: THE CONTRACTOR SHALL INSTALL SPECIAL SEDIMENT CONTROL FENCE OR WATTLES IN LOW AREAS OF SILT FENCE AS NEEDED OR DIRECTED BY THE ENGINEER.

PROFILE

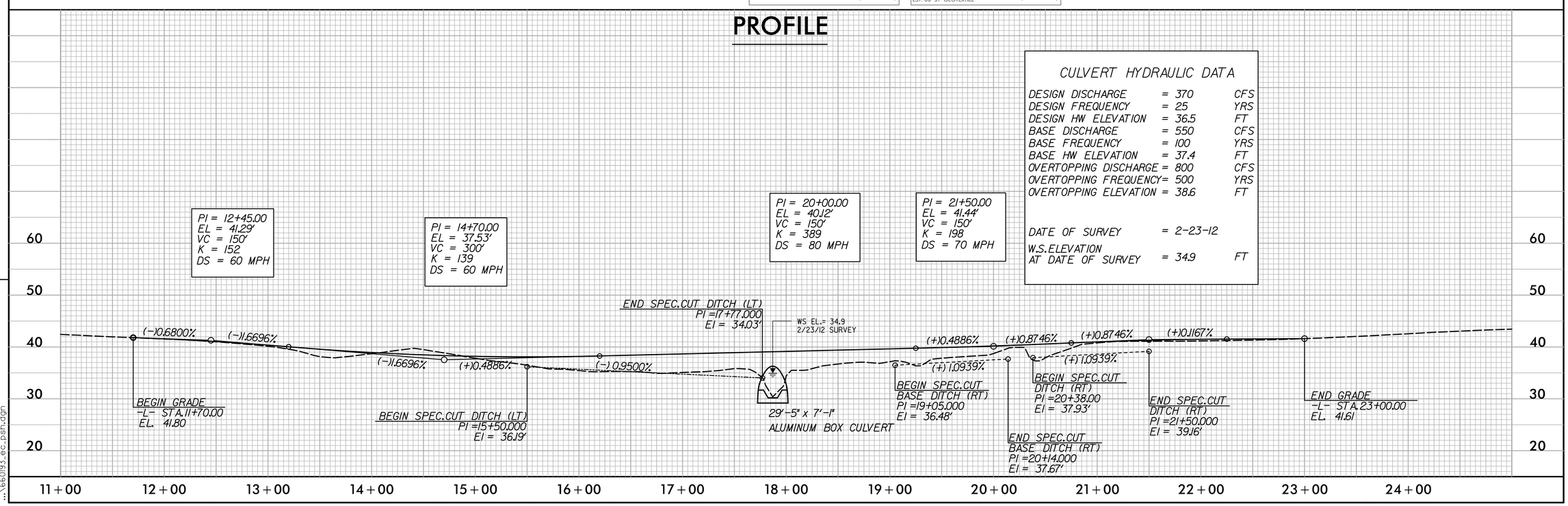

REVISIONS

11/13/2013
3:45:01 PM
...\660193_ec_psh.dgn

ONSLOW COUNTY 0193 CULVERT PHASING
FORK BRANCH

HNTB NORTH CAROLINA, P.C.
343 E. Six Forks Road, Suite 200
Raleigh, North Carolina 27609
NC License No: C-1554

DATE: NOVEMBER 25, 2013

PROJECT REFERENCE NO.	SHEET NO.
17BP.3.R.14	EC-8
R/W SHEET NO.	

PHILLIP E. ROGERS, P.E.
EROSION CONTROL
LEVEL III-A
CERTIFICATION #330

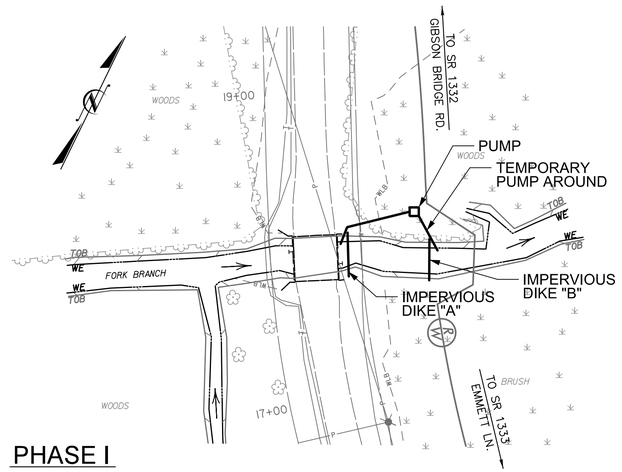

PHASE I

1. INSTALL IMPERVIOUS DIKES "A" & "B" AS SHOWN.
2. REMOVE A PORTION OF EACH DOWNSTREAM WINGWALL AS SHOWN.
3. INSTALL PIPE AND PUMP. THEN PUMP FORK BRANCH AROUND CONSTRUCTION AREA.
4. DEWATER CONSTRUCTION AREA INTO SPECIAL STILLING BASIN(S).

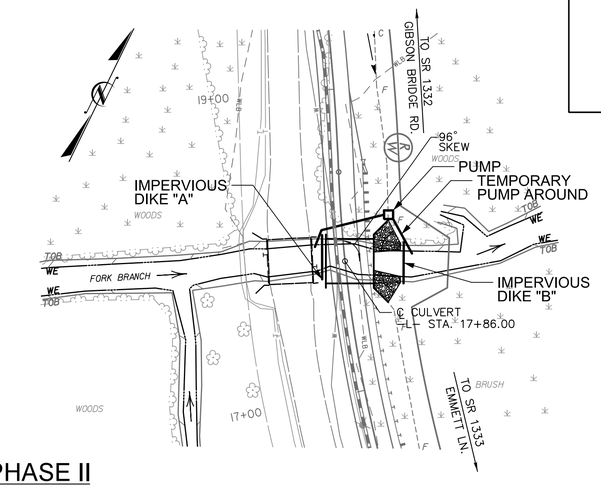

PHASE II

1. INSTALL 31.5' OF PROPOSED ALUMINUM BOX CULVERT WITH TEMPORARY HEADWALL & PARTIALLY CONSTRUCT ROADWAY AS SHOWN.
2. UPON COMPLETION OF DOWNSTREAM CHANNEL IMPROVEMENTS AND RIP RAP PLACEMENT, REMOVE IMPERVIOUS DIKES, PUMP AND TEMPORARY PUMP AROUND.
3. SHIFT TRAFFIC ONTO NEW LOCATION, IN ACCORDANCE WITH THE TRAFFIC CONTROL PLANS.

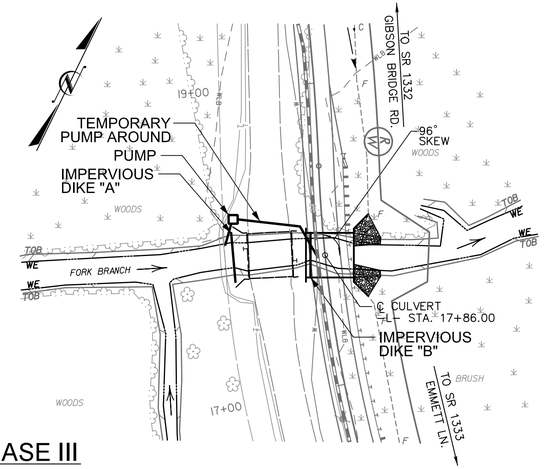

PHASE III

1. INSTALL IMPERVIOUS DIKES "A" & "B" AS SHOWN.
2. INSTALL PIPE AND PUMP. THEN PUMP FORK BRANCH AROUND CONSTRUCTION AREA.
3. DEWATER CONSTRUCTION AREA INTO SPECIAL STILLING BASIN(S).
4. REMOVE THE EXISTING BRIDGE AND CONSTRUCT THE REMAINING 9' OF PROPOSED ALUMINUM BOX CULVERT AND HEADWALL.

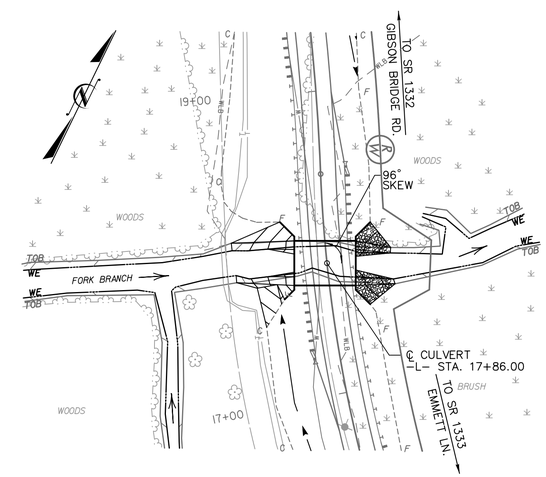

PHASE IV

1. UPON COMPLETION OF UPSTREAM CHANNEL IMPROVEMENTS, REMOVE IMPERVIOUS DIKES "A" & "B" AND TEMPORARY PIPE.
2. COMPLETE CONSTRUCTION OF PROPOSED ROADWAY.

PROJ. REFERENCE NO.	SHEET NO.	TOTAL SHEETS
17BP.3.R.14	X-1	7

Note: Approximate quantities only. Unclassified Excavation, Borrow Excavation, Shoulder Borrow, Fine Grading, Clearing and Grubbing, Breaking of Existing Pavement, and Removal of Existing Pavement will be paid for at the contract lump sum price for "Grading."

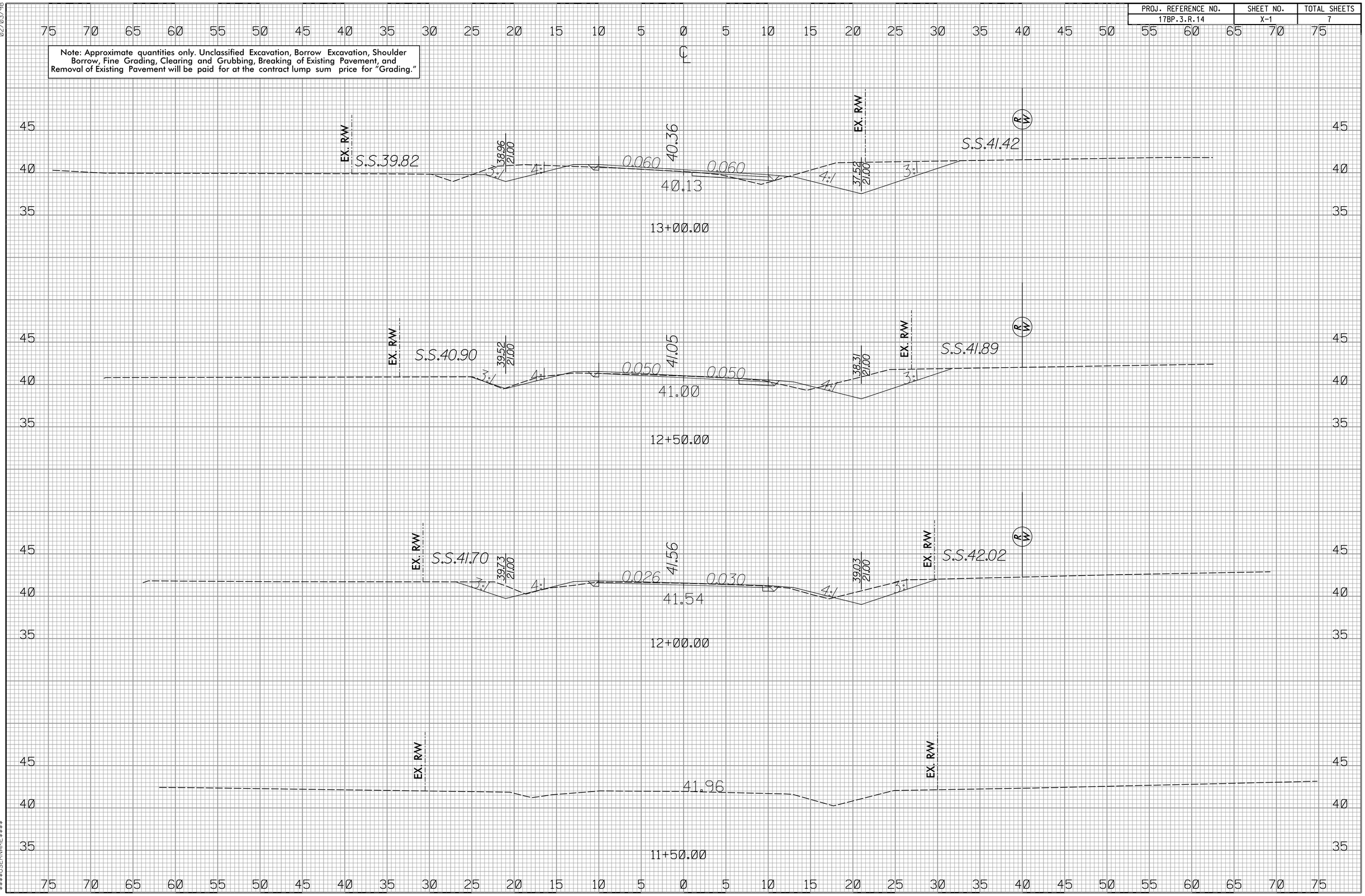

02/03/98

2:31:55 PM
$$$$USERNAME$$$$

PROJ. REFERENCE NO.	SHEET NO.	TOTAL SHEETS
17BP.3.R.14	X-2	7

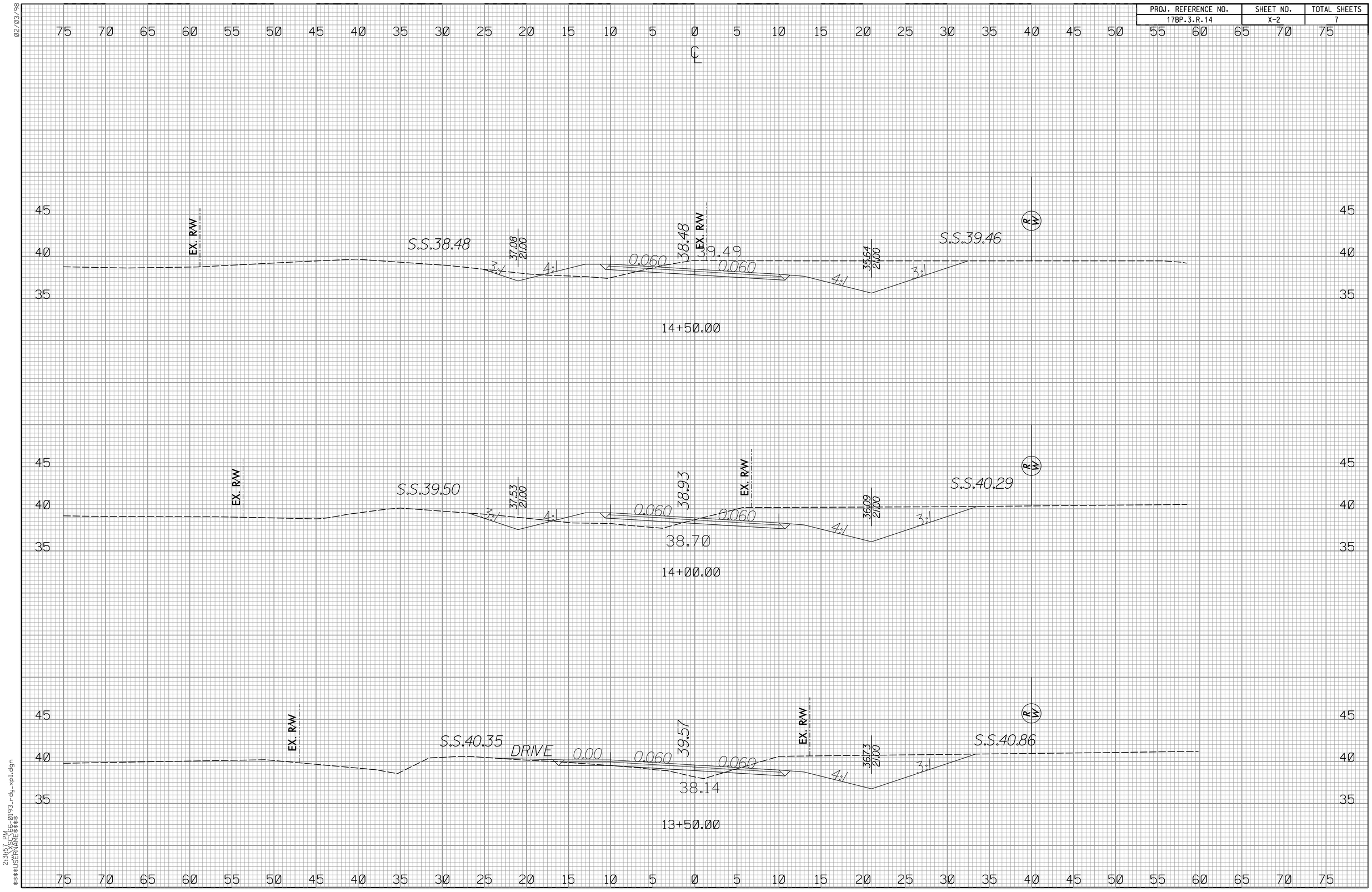

02/03/98

2:31:57 PM
$$$$USERNAME$$$$
X:\SCV\66-0193-rdy-xpl.dgn

PROJ. REFERENCE NO.	SHEET NO.	TOTAL SHEETS
17BP.3.R.14	X-3	7

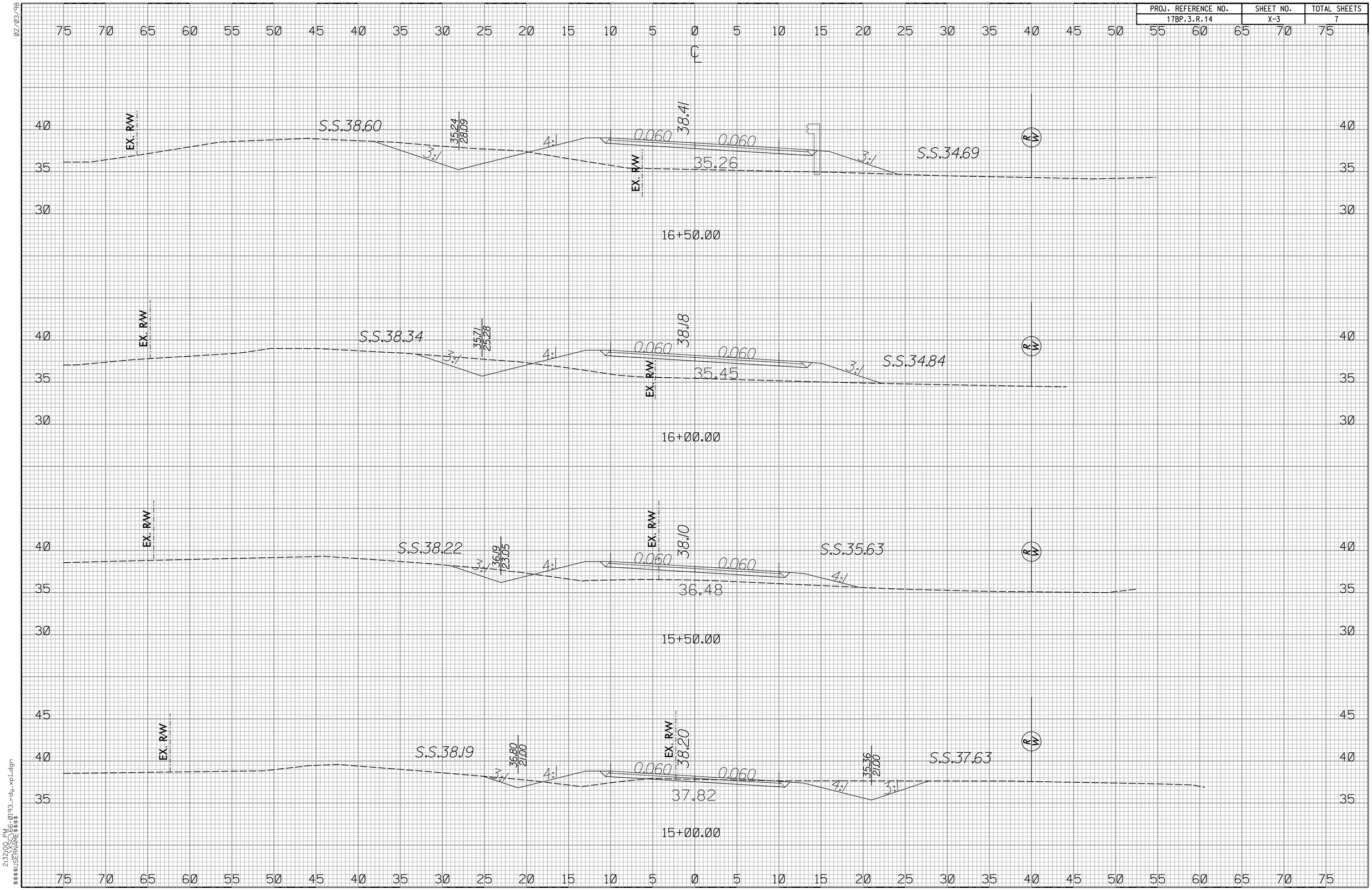

02/03/98

2:32:00 PM
$$$$USERNAME$$$$
$$$$DGNFILE$$$$ 86-0193_rdy_xpl.dgn

PROJ. REFERENCE NO.	SHEET NO.	TOTAL SHEETS
17BP.3.R.14	X-4	7

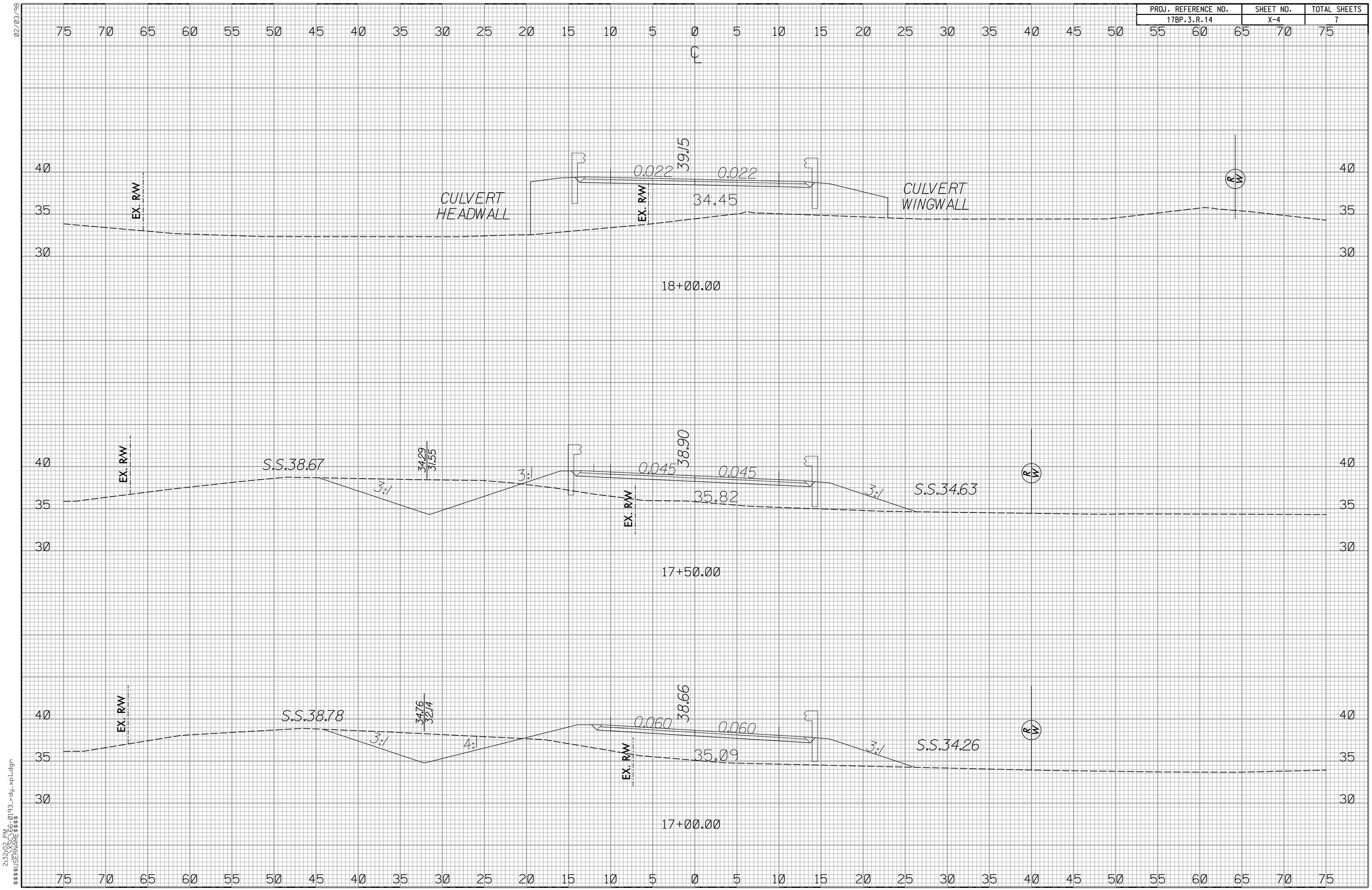

02/03/98

2:32:02 PM
$$$$USERNAME$$$$
X:\SC\86-0193_rdy_xpl.dgn

PROJ. REFERENCE NO.	SHEET NO.	TOTAL SHEETS
17BP.3.R.14	X-5	7

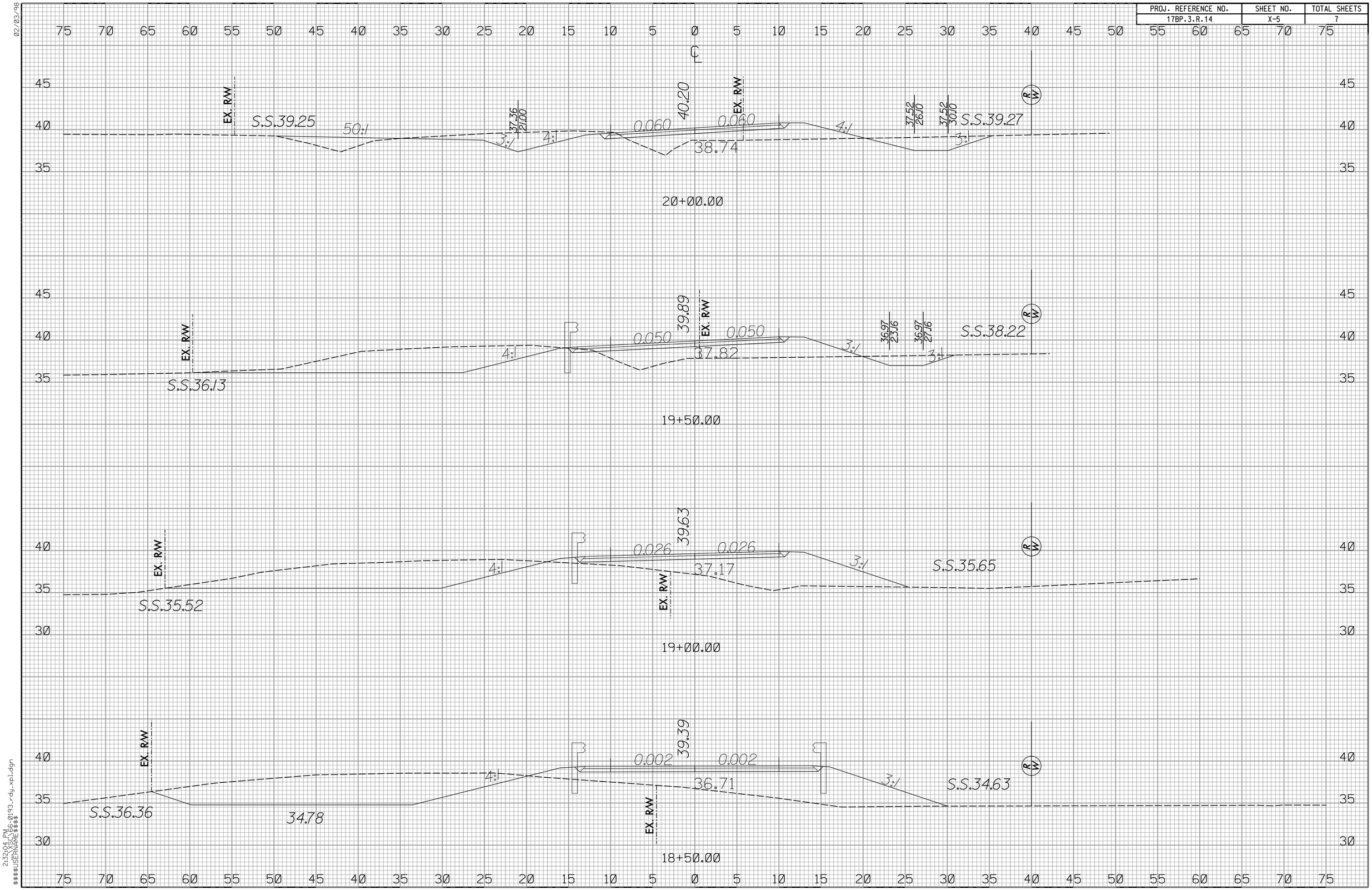

02/03/98

2:32:04 PM
$$$$USERNAME$$$$

PROJ. REFERENCE NO.	SHEET NO.	TOTAL SHEETS
17BP.3.R.14	X-6	7

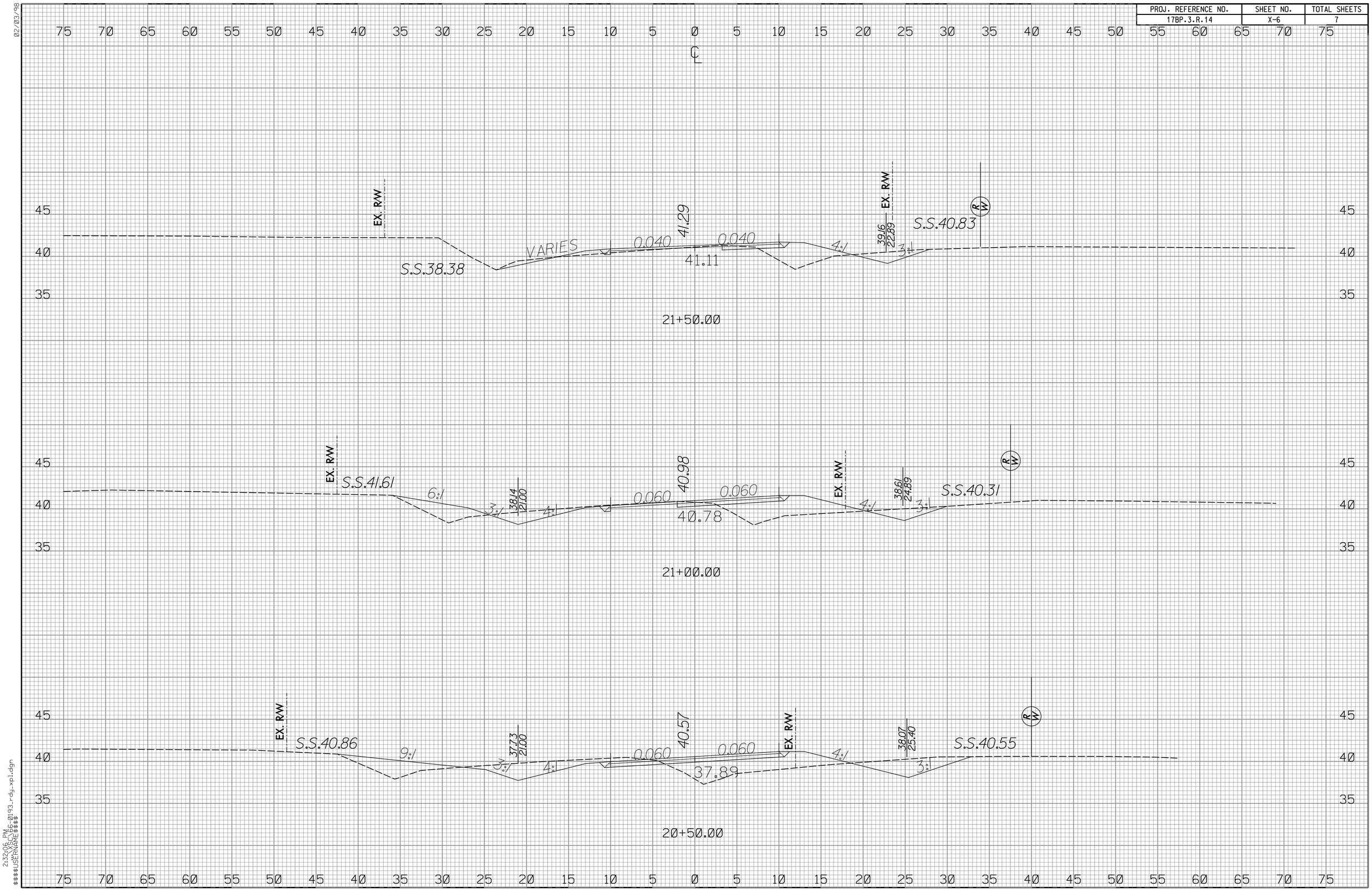

02/03/98

2:32:06 PM
$$$$USERNAME$$$$ 86-0193-rdy_xpl.dgn

PROJ. REFERENCE NO.	SHEET NO.	TOTAL SHEETS
17BP.3.R.14	X-7	7

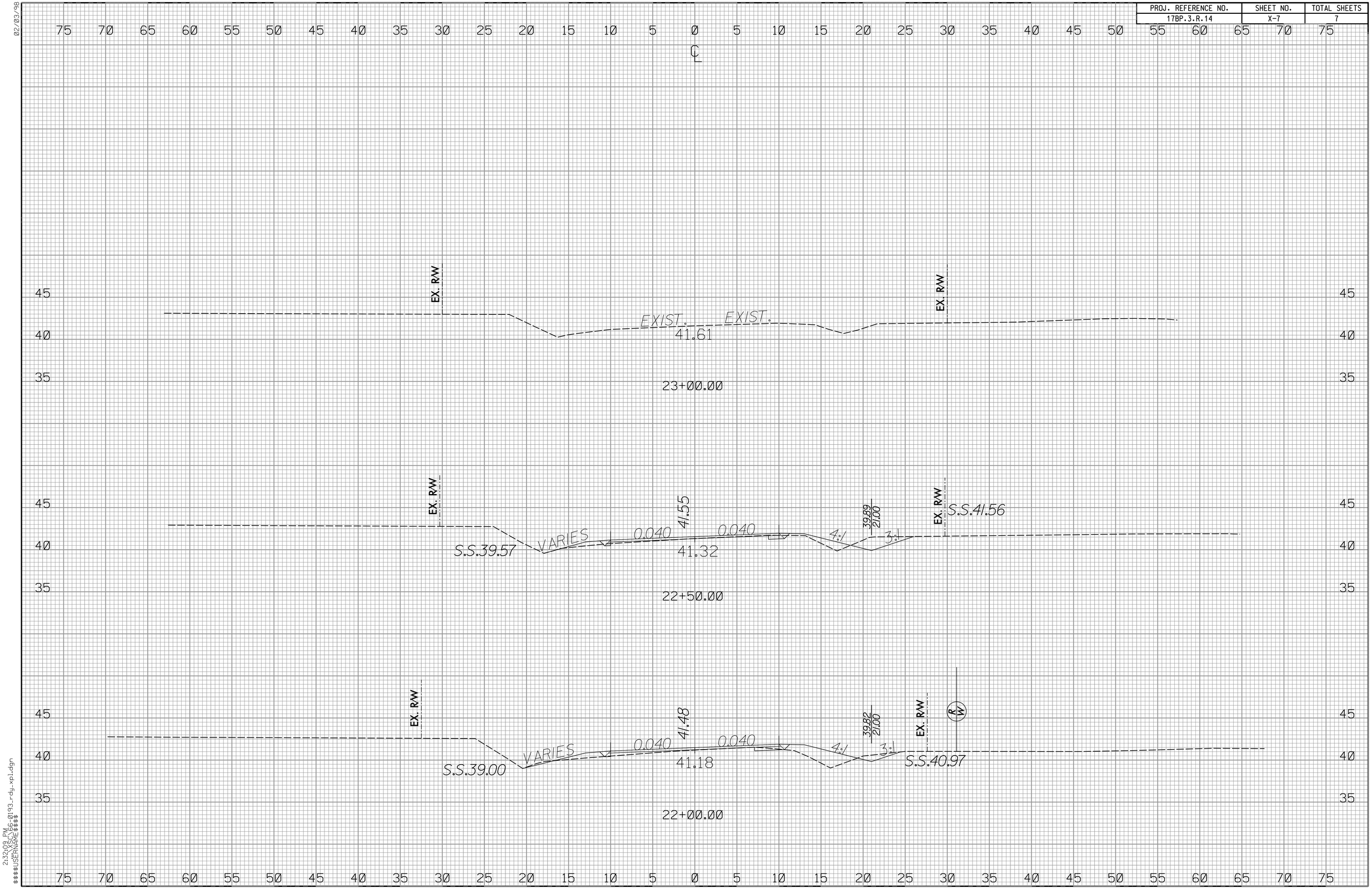

02/03/98

2:32:09 PM
$$$$USERNAME$$$$

STATE	STATE PROJECT REFERENCE NO.	SHEET NO.	TOTAL SHEETS
N.C.	17BP.3.R.14	UC-1	7

UTILITY DESIGN ENGINEER

NORTH CAROLINA PROFESSIONAL SEAL 026361 ENGINEER KEVIN C. ZDIEK

2013-SEP-19

HNTB NORTH CAROLINA, P.C.
343 E. Six Forks Road, Suite 200
Raleigh, North Carolina 27609
NC License No: C-1554

DATE: SEPTEMBER 19, 2013

STATE OF NORTH CAROLINA
DIVISION OF HIGHWAYS

ONSLOW COUNTY

LOCATION: BRIDGE NO. 193 OVER FORK BRANCH ON SR 1331 (WHITE OAK RIVER RD.)

TYPE OF WORK: UTILITIES CONSTRUCTION

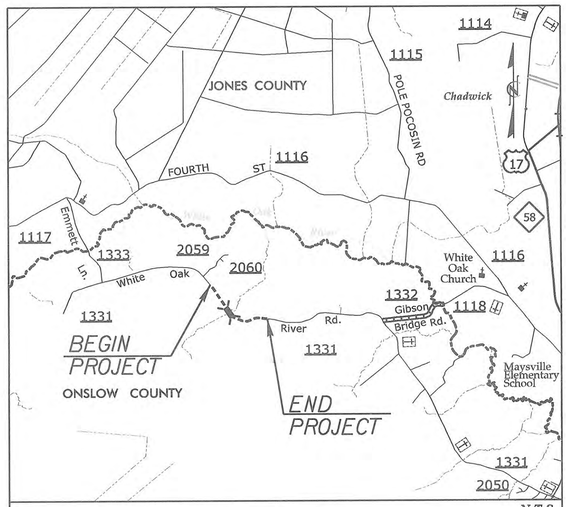

VICINITY MAP — N.T.S. — ONSITE DETOUR

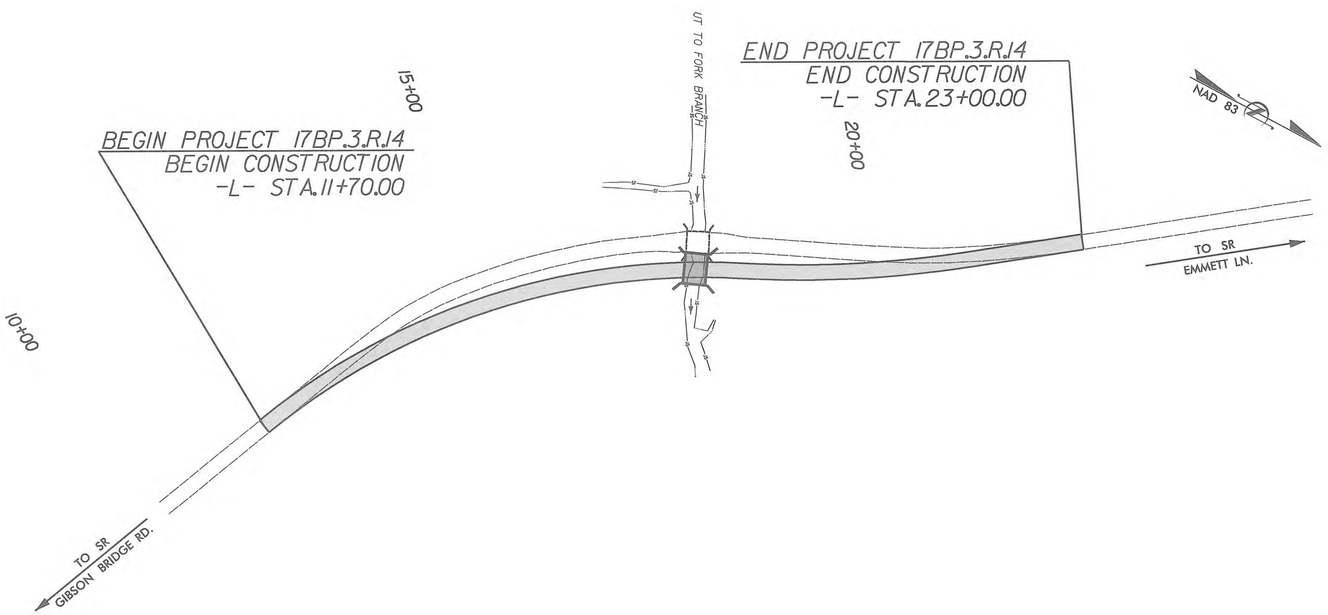

PROJECT: 17BP.3.R.14

CONTRACT:

$$$$DATE$$$$
9/19/2013
P:\OBS\0696\04\0200\ONSLOW_BR193\Utilities\Roy_Lu\Proj\66-0193_UC_U01.dgn

GRAPHIC SCALES

50 25 0 50 100
PLANS

50 25 0 50 100
PROFILE (HORIZONTAL)

10 5 0 10 20
PROFILE (VERTICAL)

PROJECT LENGTH

LENGTH OF ROADWAY PROJECT 17BP.3.R.14 =	0.20 MI.
LENGTH OF STRUCTURE PROJECT 17BP.3.R.14 =	0.01 MI.
TOTAL LENGTH OF PROJECT 17BP.3.R.14 =	0.21 MI.

INDEX OF SHEETS

SHEET NO.	DESCRIPTION
UC-1	TITLE SHEET
UC-2	SYMBOLOGY SHEET
UC-3	GENERAL NOTES SHEET
UC-3A TO UC-3C	DETAIL SHEETS
UC-4	PLAN SHEET

UTILITY OWNERS ON PROJECT

WATER – ONSLOW WATER & SEWER AUTHORITY (ONWASA)

UTILITY DESIGN BY:

MA Engineering CONSULTANTS, INC.
598 East Chatham Street, Suite 137 Cary, NC 27511
Phone: 919.297.0220 Fax. 919.297.0221

NCDOT PROJECT ENGINEER:
AMANDA GLYNN, P.E.
PREPARED FOR:
NORTH CAROLINA
DEPARTMENT OF TRANSPORTATION
DIVISION BRIDGE PROGRAM

PROJECT REFERENCE NO.	SHEET NO.
17BP.3.R.14	UC-2

STATE OF NORTH CAROLINA
DIVISION OF HIGHWAYS

UTILITIES PLAN SHEET SYMBOLS

2013-SEP-19

PROPOSED WATER SYMBOLS

- Water Line (Sized as Shown) — 12" WL
- 11¼ Degree Bend
- 22½ Degree Bend
- 45 Degree Bend
- 90 Degree Bend
- Plug
- Tee
- Cross
- Reducer
- Gate Valve — GV
- Butterfly Valve — BV
- Tapping Valve — TGV
- Line Stop — LS
- Line Stop with Bypass — LS/BP
- Blow Off — BO
- Fire Hydrant — PFH
- Relocate Fire Hydrant — RFH
- Remove Fire Hydrant — REM FH
- Water Meter — PWM
- Relocate Water Meter — RWM
- Remove Water Meter — REM WM
- Water Pump Station — PS(W)
- RPZ Backflow Preventer — PBPZ
- DCV Backflow Preventer — PBFP
- Relocate RPZ Backflow Preventer — RRPZ
- Relocate DCV Backflow Preventer — RBFP

PROPOSED SEWER SYMBOLS

- Gravity Sewer Line (Sized as Shown) — 12" SS
- Force Main Sewer Line (Sized as Shown) — 12" FSS
- Manhole (Sized per Note)
- Sewer Pump Station — PS(SS)

PROPOSED MISCELLANOUS UTILITIES SYMBOLS

- Power Pole
- Telephone Pole
- Joint Use Pole
- Telephone Pedestal — TEL PED
- Utility Line by Others (Type as Shown) — PROP O/H POW LINES
- Trenchless Installation — 12" TL INSTALL
- Encasement by Open Cut — 24" ENCAS BY OC
- Encasement — 24" ENCASEMENT
- Thrust Block
- Air Release Valve — AR
- Utility Vault — UV
- Concrete Pier — CP
- Steel Pier — SP
- Plan Note — NOTE
- Pay Item Note — PAY ITEM

EXISTING UTILITIES SYMBOLS

- Power Pole
- Telephone Pole
- Joint Use Pole
- Utility Pole
- Utility Pole with Base
- H-Frame Pole
- Power Transmission Line Tower
- Water Manhole
- Power Manhole
- Telephone Manhole
- Sanitary Sewer Manhole
- Hand Hole for Cable
- Power Transformer
- Telephone Pedestal
- CATV Pedestal
- Gas Valve
- Gas Meter
- Located Miscellaneous Utility Object
- Abandoned According to Utility Records — AATUR
- End of Information — E.O.I.
- *Underground Power Line — P
- *Underground Telephone Cable — T
- *Underground Telephone Conduit — TC
- *Underground Fiber Optics Telephone Cable — T FO
- *Underground TV Cable — TV
- *Underground Fiber Optics TV Cable — TV FO
- *Underground Gas Pipeline — G
- Aboveground Gas Pipeline — A/G Gas
- *Underground Water Line — W
- Aboveground Water Line — A/G Water
- *Underground Gravity Sanitary Sewer Line — SS
- Aboveground Gravity Sanitary Sewer Line — A/G Sanitary Sewer
- *Underground SS Forced Main Line — FSS
- Underground Unknown Utility Line — ?UTL
- SUE Test Hole
- Water Meter
- Water Valve
- Fire Hydrant
- Sanitary Sewer Cleanout

*For Existing Utilities

- Utility Line Drawn from Record (Type as Shown) — W
- Designated Utility Line (Type as Shown) — W

REV: 2/1/2012

5/14/99
4\10202\DESIGN\8193\Utilities\Pay-Ins\pay\98-2193_UC_UC2.dgn
8/9/2013 10:05:55 AM

PROJECT REFERENCE NO.	SHEET NO.
17BP.3.R.14	UC-3

UTILITY DESIGN ENGINEER

NORTH CAROLINA PROFESSIONAL SEAL ENGINEER KEVIN C. JONES

2013-DEC-09

MA Engineering CONSULTANTS, INC. 598 E. Chatham Street, Suite 137 Cary, N. C. 27511

HNTB HNTB NORTH CAROLINA, P.C. 343 E. Six Forks Road, Suite 200 Raleigh, North Carolina 27609 NC License No: C-1584

DATE: DECEMBER 9, 2013

UTILITY CONSTRUCTION

GENERAL NOTES:

1. THE PROPOSED UTILITY CONSTRUCTION SHALL MEET THE APPLICABLE REQUIREMENTS OF NC DEPARTMENT OF TRANSPORTATION'S "STANDARD SPECIFICATIONS FOR ROADS AND STRUCTURES" DATED JANUARY 2012.

2. THE EXISTING UTILITIES BELONG TO ONSLOW WATER & SEWER AUTHORITY.

   CONTACT: CARL H. BAKER, P.E.
   PHONE: 910-937-7521

3. ALL WATER LINES TO BE INSTALLED WITHIN COMPLIANCE OF THE RULES AND REGULATIONS OF THE NORTH CAROLINA DEPARTMENT OF ENVIRONMENTAL AND NATURAL RESOURCES, DIVISION OF WATER RESOURCES - PUBLIC WATER SUPPLY SECTION. ALL SEWER LINES TO BE INSTALLED WITHIN COMPLIANCE OF THE RULES AND REGULATIONS OF THE NORTH CAROLINA DEPARTMENT OF ENVIRONMENT AND NATURAL RESOURCES, DIVISION OF WATER RESOURCES - WATER QUALITY SECTION. PERFORM ALL WORK IN ACCORDANCE WITH THE APPLICABLE PLUMBING CODES.

4. THE UTILITY OWNER OWNS THE EXISTING UTILITY FACILITIES AND WILL OWN THE NEW UTILITY FACILITIES AFTER ACCEPTANCE BY THE DEPARTMENT AND UTILITY OWNER. THE DEPARTMENT OWNS THE CONSTRUCTION CONTRACT AND HAS ADMINISTRATIVE AUTHORITY. COMMUNICATIONS AND DECISIONS BETWEEN THE CONTRACTOR AND UTILITY OWNER ARE NOT BINDING UPON THE DEPARTMENT OR THIS CONTRACT UNLESS AUTHORIZED BY THE ENGINEER. AGREEMENTS BETWEEN THE UTILITY OWNER AND CONTRACTOR FOR THE WORK THAT IS NOT PART OF THIS CONTRACT OR IS SECONDARY TO THIS CONTRACT ARE ALLOWED, BUT ARE NOT BINDING UPON THE DEPARTMENT.

5. PROVIDE ACCESS FOR THE DEPARTMENT PERSONNEL AND THE OWNER'S REPRESENTATIVES TO ALL PHASES OF CONSTRUCTION. NOTIFY DEPARTMENT PERSONNEL AND THE UTILITY OWNER TWO WEEKS PRIOR TO COMMENCEMENT OF ANY WORK AND ONE WEEK PRIOR TO SERVICE INTERRUPTION. KEEP UTILITY OWNERS' REPRESENTATIVES INFORMED OF WORK PROGRESS AND PROVIDE OPPROTUNITY FOR INSPECTION OF CONSTRUCTION AND TESTING.

6. THE PLANS DEPICT THE BEST AVAILABLE INFORMATION FOR THE LOCATION, SIZE, AND TYPE OF MATERIAL FOR ALL EXISTING UTILITIES. MAKE INVESTIGATIONS FOR DETERMINING THE EXACT LOCATION, SIZE, AND TYPE MATERIAL OF THE EXISTING FACILITIES AS NECESSARY FOR THE CONSTRUCTION OF THE PROPOSED UTILITIES AND FOR AVOIDING DAMAGE TO EXISTING FACILITIES. REPAIR ANY DAMAGE INCURRED TO EXISTING FACILITIES TO THE ORIGINAL OR BETTER CONDITION AT NO ADDITONAL COST TO THE DEPARTMENT.

7. MAKE FINAL CONNECTIONS OF THE NEW WORK TO THE EXISTING SYSTEM WHERE INDICATED ON THE PLANS, AS REQUIRED TO FIT THE ACTUAL CONDITIONS, OR AS DIRECTED.

8. MAKE CONNECTIONS BETWEEN EXISTING AND PROPOSED UTILITIES AT TIMES MOST CONVENIENT TO THE PUBLIC, WITHOUT ENDANGERING THE UTILITY SERVICE, AND IN ACCORDANCE WITH THE UTILITY OWNER'S REQUIREMENTS. MAKE CONNECTIONS ON WEEKENDS, AT NIGHT, AND ON HOLIDAYS IF NECESSARY.

9. ALL UTILITY MATERIALS SHALL BE APPROVED PRIOR TO DELIVERY TO THE PROJECT. SEE 1500-7, " SUBMITTALS AND RECORDS" IN SECTION 1500 OF THE STANDARD SPECIFICATIONS. THE UTILITY OWNER SHALL BE INCLUDED IN THE SUBMITTAL REVIEW AND ALLOWED 10 CALENDAR DAYS TO REVIEW THE SUBMITTALS FOR APPROVAL. MATERIALS SUPPLIED ON THE PROJECT THAT ARE NOT SPECIFICALLY IDENTIFIED ON THE PLANS OR IN NCDOT STANDARDS SHALL MEET THE STANDARD SPECIFICATIONS OF THE UTILITY OWNER.

10. CONTRACTOR SHALL NOTIFY NC ONE-CALL AT 1-800-632-4949 PRIOR TO COMMENCEMENT OF ANY CONSTRUCTION ACTIVITY SUCH THAT ALL EXISTING UTILITIES CAN BE MARKED. FURTHERMORE, THE CONTRACTOR SHALL MAKE EVERY EFFORT TO CONTACT ANY UTILITY OWNERS THAT ARE NOT MEMBERS OF NC ONE-CALL AND HAVE FACILITIES RESIDING WITHIN THE PROJECT LIMITS.

PROJECT SPECIFIC NOTES:

1. ALL WATER LINE PIPE FOR OPEN TRENCH CONSTRUCTION SHALL BE PVC C900 DR-18 AND INSTALLED WITH JOINT RESTRAINTS.

2. ALL WATER LINE PIPE FOR TRENCHLESS CONSTRUCTION SHALL BE HDPE DR-9 AND BE APPROPRIATELY LABELLED WITH THE SERVICE IDENTIFICATION STRIPES.

3. ALL WATER LINE FITTINGS, 4-INCHES THROUGH 14-INCHES IN DIAMETER, SHALL BE DUCTILE IRON PIPE (CLASS 350).

4. ANY BENDS OF PVC WATER PIPE NOT SPECIFICALLY CALLED OUT WITH A 90, 45, 22.5, OR 11.25 DEGREE BEND FITTING, SHALL BE CONSTRUCTED BY A RADIAL BEND OF THE PIPE AS NOTED ON THE PLANS OR IN ACCORDANCE WITH THE PIPE MANUFACTURER'S SPECIFICATIONS (WHICHEVER IS MORE STRINGENT) - OR A COMBINATION OF BEND FITTINGS AND A RADIAL BEND OF THE PIPE. DEFLECTION OF PIPE JOINTS ON PVC PIPE MATERIAL IS NOT AN ACCEPTABLE METHOD OF PIPE BENDING.

5. ALL FITTINGS (BENDS, TEES, CROSSES, REDUCERS, PLUGS, ETC.) SHALL BE ADEQUATELY RESTRAINED BY THE USE OF RESTRAINING GLANDS AND CAST IN PLACE CONCRETE THRUST RESTRAINTS.

6. THE EXISTING 12" WATER LINE SHALL BE RESTRAINED ON THE PORTION TO REMAIN AFTER VALVE INSTALLATION. THE CONTRACTOR SHALL EXCAVATE THE EXISTING PVC LINE AND INSTALL THE BELL RESTRAINT CLAMPS AT EVERY BELL JOINT FOR THE DISTANCE NOTED IN THE TABLE ON SHEET UC-3B.

7. ALL ELEVATIONS MEASURED FROM CENTER OF PIPE.

8. THE DRILL PATH SHALL BE BACKREAMED WITH A 16" BOREHOLE WHEN PIPE IS PULLED THROUGH.

9. CONTRACTOR'S ATTENTION IS DIRECTED TO SECTIONS 102, 107, AND 1550 OF THE STANDARD SPECIFICATIONS CONCERNING TRENCHLESS INSTALLATION. IT IS CONTRACTOR'S RESPONSIBILITY TO HAVE BORE PATH DESIGNED AND SEALED BY A LICENSED NORTH CAROLINA PROFESSIONAL ENGINEER. NO DAMAGE IS ALLOWED TO RIVER, WETLANDS, OR BUFFER ZONES.

UTILITY OWNERS ON THIS PROJECT:

1. ONSLOW WATER & SEWER AUTHORITY
   UTILITY: 12" WATER LINE
   CONTACT: MATTHEW HYPES, PE
   PHONE: (910) 937-7525

REVISIONS

8/17/99

PROJECT REFERENCE NO.	SHEET NO.
17BP.3.R.14	UC-3A

UTILITY DESIGN ENGINEER

NORTH CAROLINA PROFESSIONAL SEAL ENGINEER KEVIN C. ZDES

2013-SEP-13

MA Engineering CONSULTANTS, INC. 598 E. Chatham Street, Suite 137, Cary, N. C. 27511

HNTB HNTB NORTH CAROLINA, P.C. 343 E. Six Forks Road, Suite 200 Raleigh, North Carolina 27609 NC License No: C-1554

DATE: SEPTEMBER 19, 2013

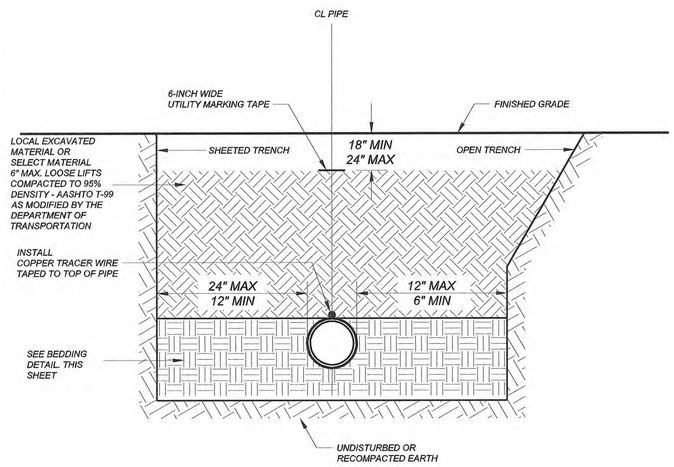

NOTES:
1. ALL SHORING & TRENCHING SHALL COMPLY WITH OSHA SAFETY STANDARDS FOR THE CONSTRUCTION INDUSTRY.
2. BELL HOLES NOT SHOWN.
3. ALL BACKFILL MATERIAL SHALL BE FREE OF ROCKS, FOREIGN MATERIAL, AND FROZEN EARTH.

GENERAL TRENCH DETAIL
NTS

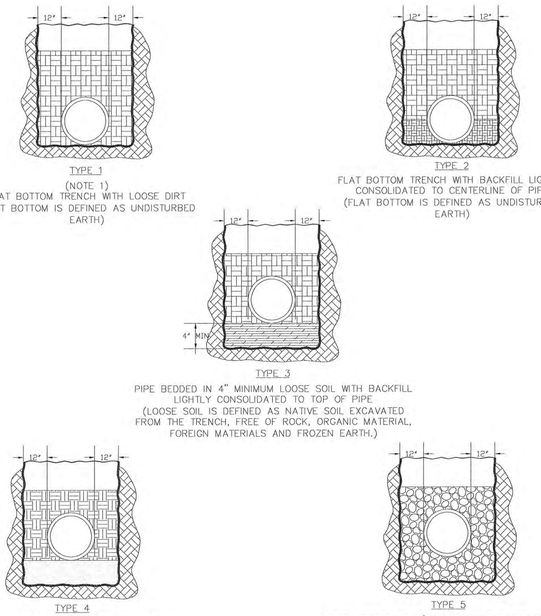

TYPE 1
(NOTE 1)
FLAT BOTTOM TRENCH WITH LOOSE DIRT
(FLAT BOTTOM IS DEFINED AS UNDISTURBED EARTH)

TYPE 2
FLAT BOTTOM TRENCH WITH BACKFILL LIGHTLY CONSOLIDATED TO CENTERLINE OF PIPE
(FLAT BOTTOM IS DEFINED AS UNDISTURBED EARTH)

TYPE 3
PIPE BEDDED IN 4" MINIMUM LOOSE SOIL WITH BACKFILL LIGHTLY CONSOLIDATED TO TOP OF PIPE
(LOOSE SOIL IS DEFINED AS NATIVE SOIL EXCAVATED FROM THE TRENCH, FREE OF ROCK, ORGANIC MATERIAL, FOREIGN MATERIALS AND FROZEN EARTH.)

TYPE 4
PIPE BEDDED IN SAND, GRAVEL, OR CRUSHED STONE TO A DEPTH OF 1/8 PIPE DIAMETER, 4" MINIMUM WITH BACKFILL COMPACTED TO TOP OF PIPE.
(APPROXIMATELY 80 PERCENT STANDARD PROCTOR, AASHTO T-99)

TYPE 5
PIPE BEDDED TO IT'S CENTERLINE IN COMPACTED GRANULAR MATERIAL, 4" MINIMUM UNDER PIPE. COMPACTED GRANULAR OR SELECT MATERIAL TO TOP OF PIPE. (APPROXIMATELY 90 PERCENT STANDARD PROCTOR, AASTO T-99)
(SELECT MATERIAL IS DEFINED AS NATIVE SOIL EXCAVATED FROM THE TRENCH, FREE OF ROCKS, ORGANIC MATERIAL, FOREIGN MATERIALS AND FROZEN EARTH)

NOTES:
1. FOR NORMAL PIPE SIZES 14 INCH AND LARGER, CONSIDERATION SHOULD BE GIVEN TO THE USE OF LAYING CONDITIONS OTHER THAN TYPE 1.
2. CONSIDERATION OF THE PIPE-ZONE EMBEDMENT CONDITIONS INCLUDED IN THIS FIGURE MAY BE INFLUENCE BY FACTORS OTHER THAN PIPE STRENGTH. FOR ADDITIONAL INFORMATION ON PIPE BEDDING AND BACKFILL, SEE ANSI/AWWA C600.

PIPE BEDDING DETAIL

STANDARD UTILITY MARKER FOR WATER MAIN
NTS

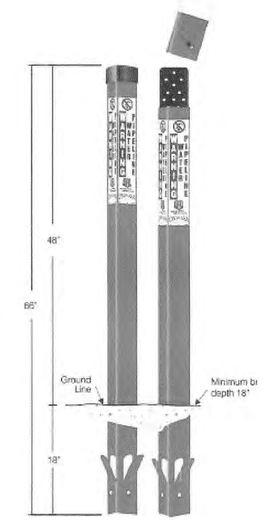

PARTS LIST
1- RHINO #TVF66UB - RHINO TRIVIEWFLEX, 66" BLUE WITH BLACK CAP OR
1- RHINO #TV166UW2 - RHINO TRIVIEW TEST STATION, 66", 2 INSIDE TERMINALS, BLUE WITH WHITE CAP
1- CAP LOCK - TS-LOCK FOR TEST STATIONS
3- DECAL # SD-8516K CUSTOM DECALS

NOTES:

THE TRIGRIP ANCHOR FLAPS SHALL BE EXTENDED PRIOR TO BURIAL OF THE POST. SOIL SHALL BE COMPACTED DURING PLACEMENT OF MARKER POST.

ALL MATERIALS SHALL BE PROVIDED BY RHINO MARKING & PROTECTION SYSTEMS, INC.

INSTALL ABOVE-GROUND UTILITY MARKERS AT HORIZONTAL BENDS, MAIN-LINE VALVE BOXES (NOT WITHIN 10 FEET OF A HYDRANT ASSEMBLY BRANCH), ENDS OF DIRECTIONAL BORES, BANK EDGE OF ALL CHANNELS CROSSED BY DIRECTIONAL BORES, EACH SIDE OF A ROADWAY CROSSING, AND ALONG THE PIPING ALIGNMENT.

THE MAXIMUM SPACING FOR THE ABOVE-GROUND UTILITY MARKERS SHALL BE 500 LINEAR FEET.

IN LOCATIONS WHERE THERE ARE MULTIPLE HORIZONTAL BENDS IN CLOSE PROXIMITY, ONE MARKER WILL BE SUFFICIENT TO DEMONSTRATE THE CHANGE IN DIRECTION.

UTILITY MARKERS DESIGNED TO PROVIDE ACCESS TO TRACER WIRE SHALL BE INSTALLED AT EVERY THIRD MARKER, OR EVERY 1000 FEET OF PIPE, WHICHEVER IS LESSER.

TRACER WIRE ACCESSIBLE ABOVE-GROUND UTILITY MARKERS SHALL ALSO BE INSTALLED AT ENDS OF DIRECTIONAL BORES.

MAXIMUM TRENCH WIDTH
AT TOP OF PIPE

NOMINAL PIPE SIZE (INCHES)	TRENCH WIDTH (INCHES)	NOMINAL PIPE SIZE (INCHES)	TRENCH WIDTH (INCHES)
4	28	20	44
6	30	24	48
8	32	30	54
10	34	36	60
12	36	42	66
14	38	48	54	72
16	40	54	78
18	42		

8/17/99

9/19/2013
P:\DBS\0696\014\0200\ONSLOW_BR193\Utilities\Rdy_Ut\Proj\66-0193_UC_UC3A.dgn
2:13:03 PM

RESTRAINED JOINT TABLE FOR 12" PVC PIPE

FITTING	REQUIRED RESTRAINED LENGTH (FT) OF PVC PIPE BY DEPTH OF COVER							
HORIZONTAL BENDS	**3 FT**	**4 FT**	**5 FT**	**6 FT**	**7 FT**	**8 FT**	**9 FT**	**10 FT**
12 INCH DIA - 11.25 DEG	5	4	3	3	3	3	2	2
12 INCH DIA - 22.5 DEG	9	7	7	6	5	5	4	4
12 INCH DIA - 45 DEG	17	15	13	12	10	8	9	8
12 INCH DIA - 90 DEG	41	35	31	27	25	22	20	19
VERTICAL DOWN BENDS	**3 FT**	**4 FT**	**5 FT**	**6 FT**	**7 FT**	**8 FT**	**9 FT**	**10 FT**
12 INCH DIA - 11.25 DEG	15	13	11	10	8	8	7	6
12 INCH DIA - 22.5 DEG	31	25	21	19	17	15	14	12
12 INCH DIA - 45 DEG	63	52	44	38	34	31	28	25
VERTICAL UP BENDS	**3 FT**	**4 FT**	**5 FT**	**6 FT**	**7 FT**	**8 FT**	**9 FT**	**10 FT**
12 INCH DIA - 11.25 DEG	5	4	3	3	3	3	2	2
12 INCH DIA - 22.5 DEG	9	7	7	6	5	5	4	4
12 INCH DIA - 45 DEG	17	15	13	12	10	10	9	8
DEAD ENDS / VALVES	**3 FT**	**4 FT**	**5 FT**	**6 FT**	**7 FT**	**8 FT**	**9 FT**	**10 FT**
12 INCH DIA	118	101	88	79	71	64	59	54
REDUCERS	**3 FT**	**4 FT**	**5 FT**	**6 FT**	**7 FT**	**8 FT**	**9 FT**	**10 FT**
14 INCH X 12 INCH	35	30	26	23	21	19	18	16

ASSUMPTIONS

LAYING PIPE CONDITION = TYPE 4
SOIL DESIGNATION = ML WITH GRANULAR BACKFILL

DESIGN PRESSURE = 200 PSI (TEST PRESSURE)
SAFETY FACTOR = 1.5

NOTES:

1. RL = RUN LENGTH BETWEEN FIRST JOINTS OF PIPE ALONG THE RUN OF TEE.
2. RESTRAINED LENGTH IS MEASURED AS FOLLOWS:
   A. HORIZONTAL/VERTICAL BENDS: ALONG EACH SIDE OF BEND
   B. HORIZONTAL/VERTICAL BENDS - OFFSETS: ALONG THE OTHER SIDE OF EACH BEND. ALL PIPE BETWEEN THE TWO BENDS SHALL BE RESTRAINED JOINT.
   C. DEAD ENDS: ALONG PIPE FROM THE PLUG.
   D. VALVES: ALONG THE PIPE IN EACH DIRECTION FROM THE VALVE.
   E. TEES: ALONG THE BRANCH PIPE FROM THE TEE.
3. WHEN IT IS NOT POSSIBLE TO INSTALL RESTRAINED LENGTHS AS NOTED BY THIS TABLE, THE CONTRACTOR SHALL INSTALL THE APPROPRIATE CONCRETE THRUST RESTRAINTS AS PER THE DETAILS HEREIN.
4. MINIMUM COVER OVER PVC PIPE IS 3 FEET.
5. FITTINGS SHALL BE DUCTILE IRON.
6. JOINT RESTRAINT SHALL BE BELL RESTRAINT CLAMPS, AS SPECIFIED BY UTILITY OWNER.

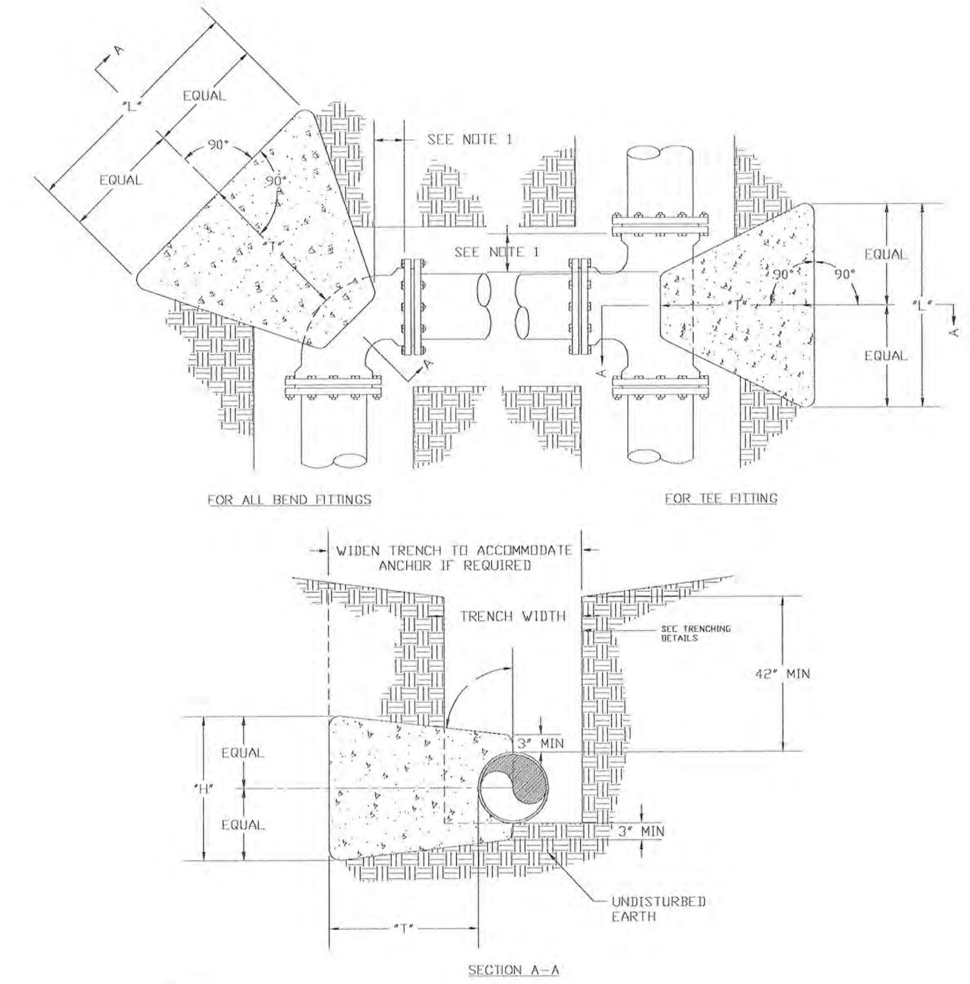

NOTES:
1. CONCRETE BLOCKING IS TO BE FORMED TO ENSURE ACCESSIBILITY TO FITTINGS AND POURED AGAINST UNDISTURBED EARTH.
2. ALL FITTINGS SHALL BE WRAPPED IN POLYETHYLENE TO PREVENT CONCRETE FROM CONTACTING FITTINGS, BOLTS, OR ENDS OF MECHANICAL JOINT BENDS.
3. CONCRETE TO BE MINIMUM 3,000 PSI @ 28 DAYS.
4. WHEN SACKRETE IS TO BE USED, IT SHALL BE PROPERLY MIXED PER MANUFACTURER SPECIFICATIONS.
5. FOR REQUIRED DIMENSIONS, SEE THRUST BLOCKING DETAIL 2

THRUST BLOCKING DETAIL 1

TEST PRESSURE = 150 PSI

PIPE SIZE	TYPE FITTING	DIMENSIONS (FT) "L"	"H"	"T"	VOLUME CONCRETE CU. YD.
<4 INCHES	11 1/4°	----	----	----	----
	22 1/2°	1.00	1.00	1.50	0.06
	45°	1.00	1.00	1.50	0.06
	90°	1.00	1.00	2.50	0.09
	TEE	1.00	1.00	2.00	0.07
INCHES	11 1/4°	1.00	1.00	2.50	0.09
	22 1/2°	1.00	1.00	2.50	0.09
	45°	1.00	1.00	2.50	0.09
	90°	1.50	1.50	2.50	0.15
	TEE	1.50	1.50	2.00	0.12
6 INCHES	11 1/4°	1.50	1.50	2.50	0.15
	22 1/2°	1.50	1.50	2.50	0.15
	45°	1.50	1.50	2.50	0.15
	90°	2.00	2.00	3.00	0.28
	TEE	2.00	2.00	2.50	0.23
8 INCHES	11 1/4°	2.00	2.00	2.50	0.23
	22 1/2°	2.00	2.00	2.50	0.23
	45°	2.00	2.00	2.75	0.25
	90°	3.00	2.00	3.00	0.39
	TEE	3.00	2.00	2.50	0.32
12 INCHES	11 1/4°	2.00	2.00	3.00	0.28
	22 1/2°	2.00	2.00	3.00	0.28
	45°	3.00	2.50	3.00	0.47
	90°	4.50	3.00	3.50	0.94
	TEE	4.50	3.00	3.00	0.81
16 INCHES	11 1/4°	2.00	2.00	3.00	0.28
	22 1/2°	3.00	2.00	3.00	0.39
	45°	4.00	3.00	3.50	0.84
	90°	6.50	3.50	3.50	1.54
	TEE	6.50	3.50	3.00	1.32

TEST PRESSURE = 200 PSI

PIPE SIZE	TYPE FITTING	DIMENSIONS (FT) "L"	"H"	"T"	VOLUME CONCRETE CU. YD.
<4 INCHES	11 1/4°	1.00	1.00	1.00	0.04
	22 1/2°	1.00	1.00	1.50	0.06
	45°	1.00	1.00	1.50	0.06
	90°	1.50	1.50	2.50	0.15
	TEE	1.50	1.50	2.00	0.12
INCHES	11 1/4°	1.00	1.00	2.50	0.09
	22 1/2°	1.00	1.00	2.50	0.09
	45°	1.50	1.50	2.50	0.15
	90°	1.50	1.50	2.50	0.15
	TEE	1.50	1.50	2.00	0.12
6 INCHES	11 1/4°	1.50	1.50	2.50	0.15
	22 1/2°	1.50	1.50	2.50	0.15
	45°	1.50	1.50	2.50	0.15
	90°	2.50	2.00	3.00	0.33
	TEE	2.50	2.00	2.50	0.28
8 INCHES	11 1/4°	2.00	2.00	2.50	0.23
	22 1/2°	2.00	2.00	2.50	0.23
	45°	2.00	2.00	2.75	0.23
	90°	4.00	2.00	3.00	0.50
	TEE	4.00	2.00	2.50	0.42
12 INCHES	11 1/4°	2.00	2.00	3.00	0.28
	22 1/2°	3.00	2.00	3.00	0.39
	45°	4.00	2.50	3.00	0.61
	90°	5.50	3.00	3.50	1.13
	TEE	5.50	3.00	3.00	0.97
16 INCHES	11 1/4°	2.00	2.00	3.00	0.28
	22 1/2°	4.00	2.00	3.00	0.50
	45°	5.50	3.00	3.50	1.13
	90°	7.50	4.00	3.50	2.01
	TEE	7.50	4.00	3.00	1.72

CHART NOTES:
1. IF BLOCKING EXCAVATION IS IN LIGHTLY COMPACTED FILL AREAS, OR IN AREAS WHERE BOULDERS OR STUMPS HAVE BEEN REMOVED, BLOCKING SIZE MUST BE RE-SIZED FOR THE SPECIFIC LOCATION/CIRCUMSTANCE BY A NC LICENSED PROFESSIONAL ENGINEER.
2. BLOCKING SIZES SHOWN IN THESE TABLES ASSUME THE FOLLOWING:
   a. BLOCKING IS CONSTRUCTED IN RESIDUAL SOILS AS SHOWN IN DETAIL.
   b. SOIL BEARING PRESSURE = 2000 PSF
   c. VELOCITY OF FLOW = 15 FPS
3. THIS DETAIL NOT APPLICABLE TO REDUCING BENDS.
4. NEITHER THE WEIGHT OF THE CONCRETE BLOCKING NOR FRICTION BETWEEN CONCRETE BLOCKING AND SOIL WAS ADDED INTO BLOCKING SIZES COMPUTATION. THEREFORE, BLOCKING SIZE IS CONSERVATIVE.

THRUST BLOCKING DETAIL 2

PROJECT REFERENCE NO.	SHEET NO.
17BP.3.R.14	UC-3B

UTILITY DESIGN ENGINEER

MA Engineering CONSULTANTS, INC. 598 E. Chatham Street, Suite 137 Cary, N. C. 27511

HNTB NORTH CAROLINA, P.C. 343 E. Six Forks Road, Suite 200 Raleigh, North Carolina 27609 NC License No: C-1554

DATE: SEPTEMBER 19, 2013

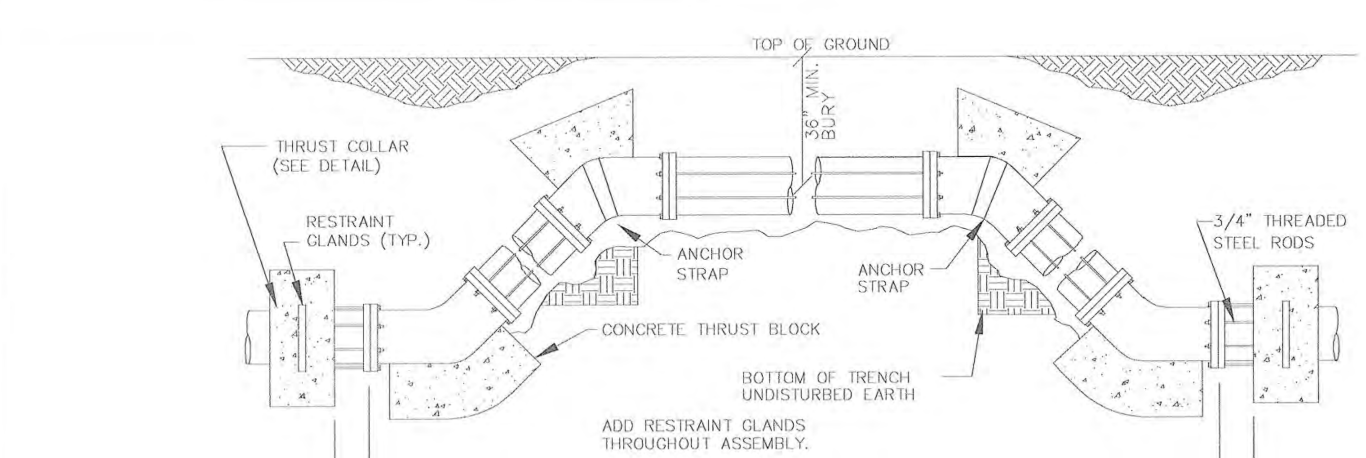

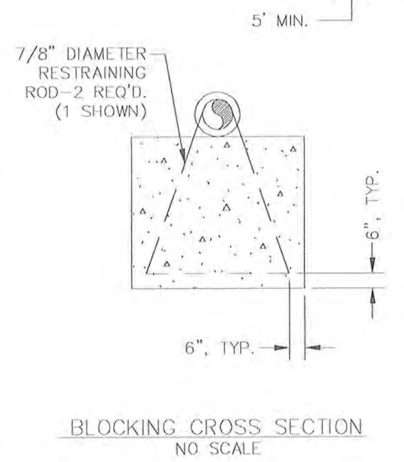

ROD REQUIREMENTS

SIZE OF BEND	STATIC THRUST IN POUNDS	NO. OF RODS REQUIRED
6"	4,328	4
8"	7,694	4
12"	17,312	4
16"	30,779	8
24"	69,252	8

GENERAL NOTES:
1. ALL FITTINGS SHALL BE WRAPPED IN POLYETHYLENE TO PREVENT CONCRETE FROM CONTACTING FITTINGS, BOLTS, OR ENDS OF MECHANICAL JOINT BENDS.
2. EACH FITTING SHALL BE SECURED BY TWO FORMS OF RESTRAINT. RESTRAINING GLANDS AND CONCRETE THRUST BLOCKING ARE PREFERRED. WEDGE-ACTION RESTRAINT GLANDS (I.E. MEGALUGS) ARE APPROVED ONLY FOR USE ON DUCTILE IRON PIPE. FULL-CIRCUMFERENTIAL PIPE RESTRAINT GLANDS (I.E. GRIP RINGS) MAY BE USED ON PVC OR DUCTILE IRON PIPE. ALL RESTRAINT GLANDS SHALL BE SPECIFICALLY DESIGNED FOR USE ON THE TYPE OF PIPE FOR WHICH THEY ARE BEING INSTALLED. OTHER FORMS OF RESTRAINT SUCH AS THREADED ROD, BELL RESTRAINT HARNESSES, ETC. MAY BE APPROVED BY ONWASA ON A CASE-BY-CASE BASIS.
3. IF APPROVED FOR USE BY ONWASA, STEEL RODS AND BOLTS SHALL BE 3/4" HOT DIPPED GALVANIZED.
4. MUST USE DUCTILE IRON EYE BOLTS WHERE NECESSARY.

THRUST BLOCKING DETAIL 3

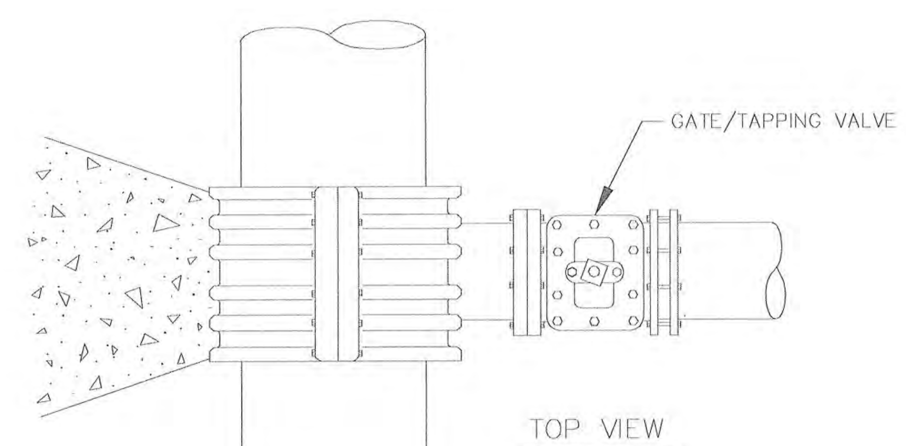

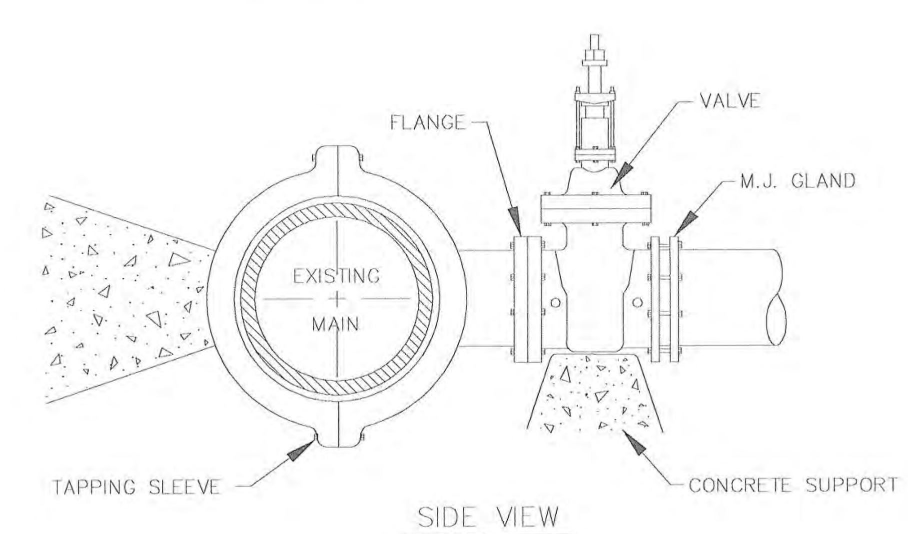

NOTES:
1. CONCRETE SHALL NOT CONTACT GLANDS, BOLTS OR ENDS OF MECHANICAL BOLTS, OR ENDS OF MECHANICAL JOINT FITTINGS. TAPPING SLEEVE AND BOTTOM OF VALVE SHALL BE WRAPPED IN POLYETHYLENE.
2. SEE STANDARD THRUST BLOCK TABLE FOR AREA OF CONCRETE REQUIRED.

4" AND LARGER TAPPING SLEEVE AND VALVE ASSEMBLY

NOTES:
1. A PROFILE AND PLAN SHALL BE PROVIDED FROM ENTRY TO EXIT FOR EACH DIRECTIONAL BORE SECTION BY THE DIRECTIONAL BORE CONTRACTOR.
2. ALL BORE SECTIONS SHALL BE HYDROSTATICALLY TESTED, PER SPECIFICATIONS UPON COMPLETION OF INSTALLATION AND PRIOR TO CONNECTION TO THE MAIN WATER LINE.
3. LENGTH OF CROSSING, LOCATION OF INSPECTION/OBSERVATION EXCAVATION, NUMBER OF P.E. PIPE JOINTS, LOCATION OF BORE MACHINE, AUGER ENTRANCE LOCATION, AND TIE-IN POINTS ARE TO BE APPROVED BY ONWASA PRIOR TO ANY START OF WORK OR ORDERING MATERIALS.
4. THE BORE DEVELOPED FOR THE LEAD IN END OF THE PIPE SHALL BE KEPT AT A MINIMUM DIAMETER FOR THE PIPE INSTALLATION. THE LEAD IN END SHALL BE PULLED THROUGH WITHOUT THE M.J. FLANGE ATTACHED FOR LARGER THAN 6" PIPE INSTALLATION. THE M.J. FLANGE FOR SAID LEAD IN END SHALL BE INSTALLED AFTER THE PIPE INSTALLATION WITH THE USE OF A SPLIT M.J. FLANGE.
5. IF BURIED OBSTRUCTIONS ARE LOCATED IN THE LENGTH OF THE DIRECTIONAL BORE, DIRECTIONAL BORE CONTRACTOR SHALL AVOID CONFLICT WITH THESE OBSTRUCTIONS BY GOING UNDER A MINIMUM OF 12" WITH PROPOSED PIPE UNLESS OTHERWISE SPECIFIED OR IDENTIFIED IN GENERAL NOTES ON SHEET, OR IN SPECIFICATIONS.

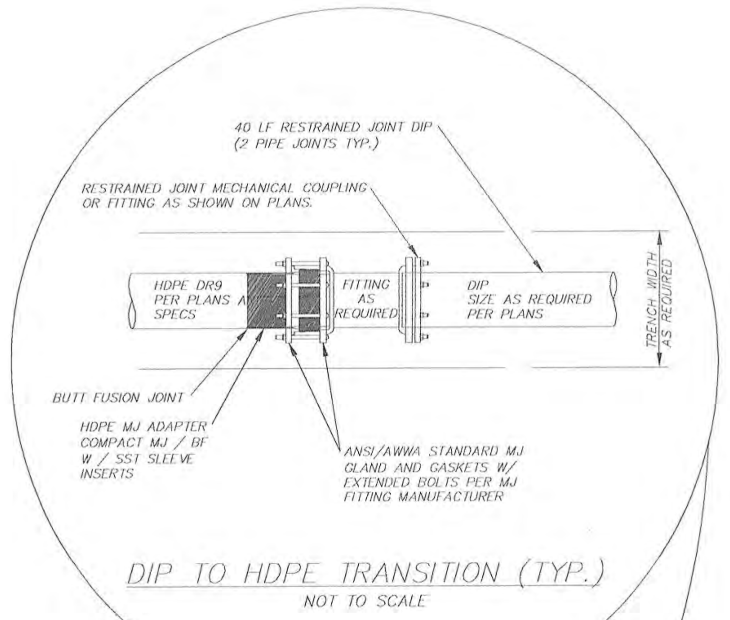

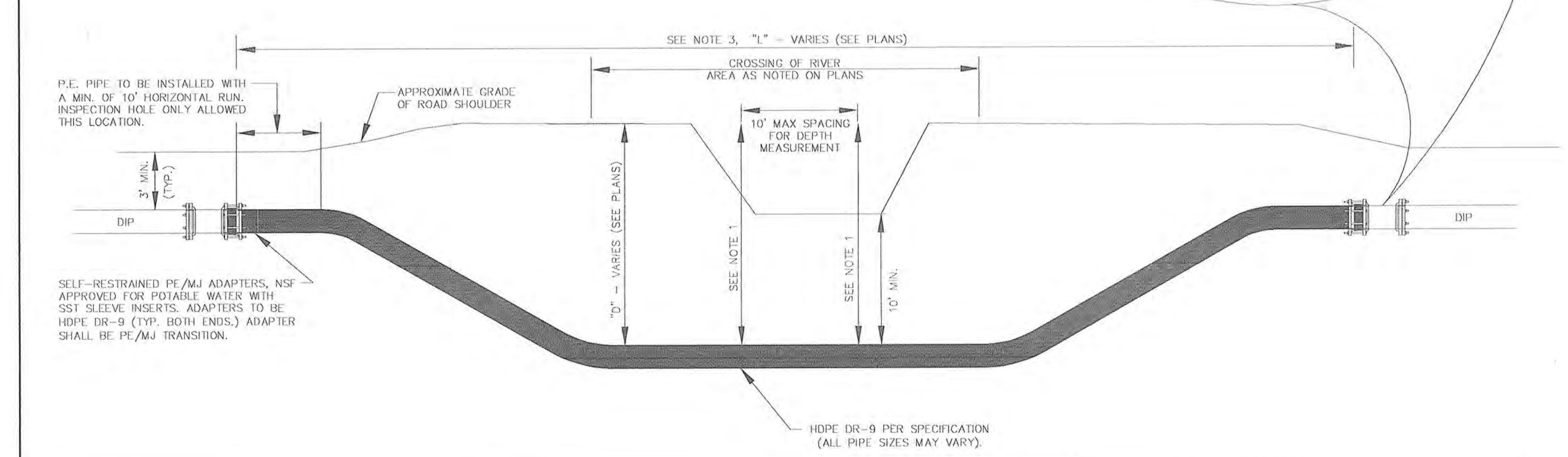

HORIZONTAL DIRECTION DRILL DETAIL

8/17/99
9/19/2013 ...\0696\014\0220\ONSLOW_BR193\Utilities\Rdy_Util\Prop_\66-2193_UC_UC3B.dgn

PROJECT REFERENCE NO.	SHEET NO.
17BP.3.R.14	UC-3C

UTILITY DESIGN ENGINEER

NORTH CAROLINA PROFESSIONAL SEAL 042890 ENGINEER KEVIN C. ZUDES

2013-SEP-19

MA Engineering CONSULTANTS, INC. — 598 E. Chatham Street, Suite 137, Cary, N. C. 27511

HNTB — HNTB NORTH CAROLINA, P.C. 343 E. Six Forks Road, Suite 200 Raleigh, North Carolina 27609 NC License No: C-1554

DATE: SEPTEMBER 19, 2013

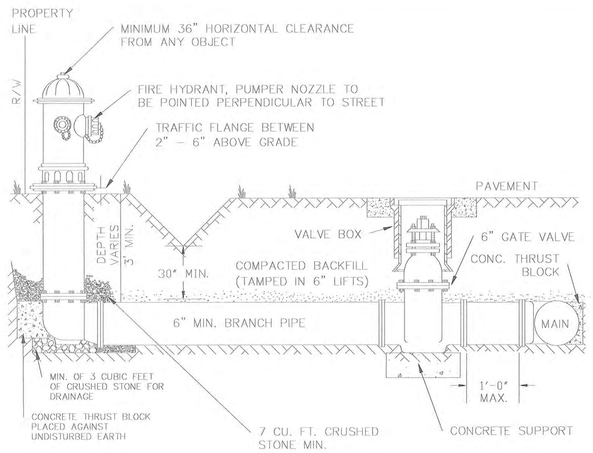

NOTES:

1. FIRE HYDRANT MANUFACTURER SHALL BE AS REQUIRED BY PROJECT SPECIFICATIONS.
2. FIRE HYDRANT SHALL BE INSTALLED USING HYDRANT TEE.
3. BRANCH PIPE SHALL BE DUCTILE IRON.
4. FIRE HYDRANTS WILL BE INSTALLED IN TRUE VERTICAL POSITION.
5. ALL JOINTS ON FIRE HYDRANT ASSEMBLIES SHALL BE RESTRAINED.
6. ALL FIRE HYDRANTS SHALL BE LOCATED WITHIN DEDICATED STREET RIGHT-OF-WAY OR A 20-FOOT PUBLICLY DEDICATED PERMANENT UTILITY EASEMENT TO ONWASA.
7. INSTALL BOLLARD GUARD POST AS PER DRAWINGS OR CONDITIONS MANDATE.

ANYTIME SITE WORK, CONSTRUCTION, ROAD WORK, OR ANY OTHER WORK CHANGES THE GRADE OF THE FIRE HYDRANT, THE CONTRACTOR IS RESPONSIBLE FOR ADJUSTING THE FIRE HYDRANT TO STAY WITHIN COMPLIANCE.

FIRE HYDRANT DETAIL

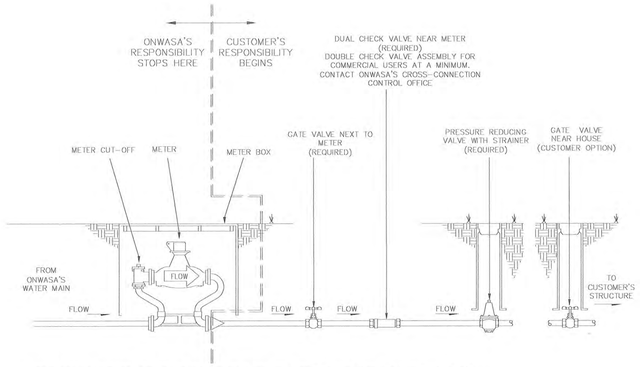

North Carolina Plumbing Code Section 608 requires a gate valve, backflow prevention and a pressure reducing valve on all connections with the Public Water Supply.

1. A gate valve, backflow device in the form of a Dual Check Valve for residential (Double Check Valve Assemblies for commercial at a minimum), and a pressure reducing valve MUST be installed directly behind the meter (see diagram above).
2. An additional gate valve located near the house is recommended, but not required.
3. All materials shall be pressure rated to one hundred-fifty (150 psi).
4. The water meter will be locked upon installation. Please contact the Onslow Water and Sewer Authority (ONWASA) twenty-four (24) hours in advance to schedule the inspection of the valves.
5. All valves MUST be installed prior to unlocking the meter.

Meter Placement Note:

Place the blue flag approximately thirty (30) feet from the center of the road Utility Right of Way for proper placement of ONWASA's water meter. All efforts will be made to install the meter where it is marked; however, ONWASA reserves the right to place the meter in the most feasible location to all parties involved. If the blue flag is not placed in a feasible location, it may result in a delay of installation.

METER INSTALLATION DETAIL

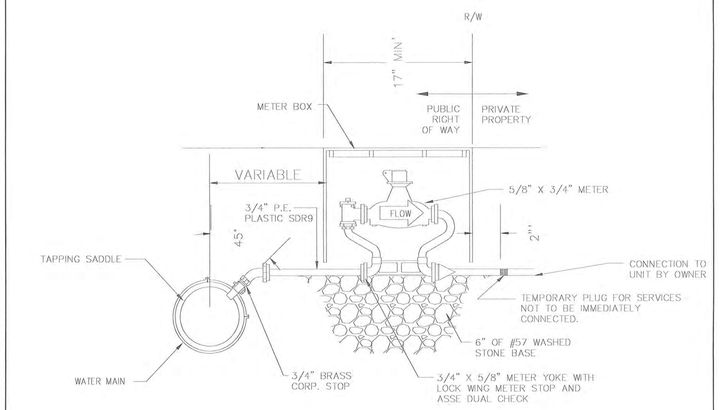

NOTE: METER BOX TO BE SUPPORTED ON BRICK OR BLOCK

WATER METER DETAIL

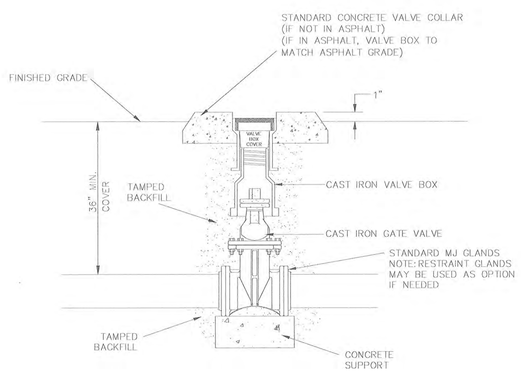

IN LINE VALVE DETAIL

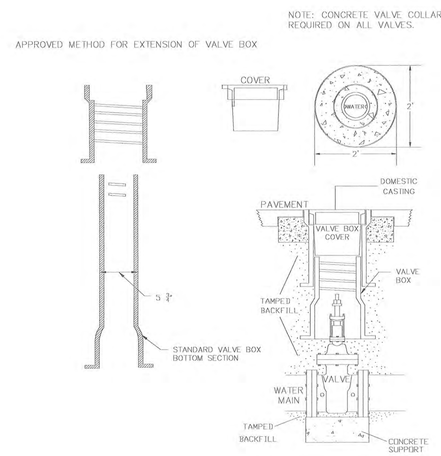

VALVE BOX DETAIL

8/17/99

8/19/2013
P:\ODS\0696\014\10200\ONSLOW_BR193\Utilities\Proj\A68-0193_UC-UC3C.dgn

PROJECT REFERENCE NO.	SHEET NO.
17BP.3.R.14	UC-4

UTILITY DESIGN ENGINEER

NORTH CAROLINA PROFESSIONAL SEAL ENGINEER KEVIN C. ZOEB

2013-SEP-20

MA Engineering CONSULTANTS, INC. 598 E. Chatham Street, Suite 137 Cary, N. C. 27511

HNTB NORTH CAROLINA, P.C. 343 E. Six Forks Road, Suite 200 Raleigh, North Carolina 27609 NC License No: C-1554

DATE: SEPTEMBER 19, 2013

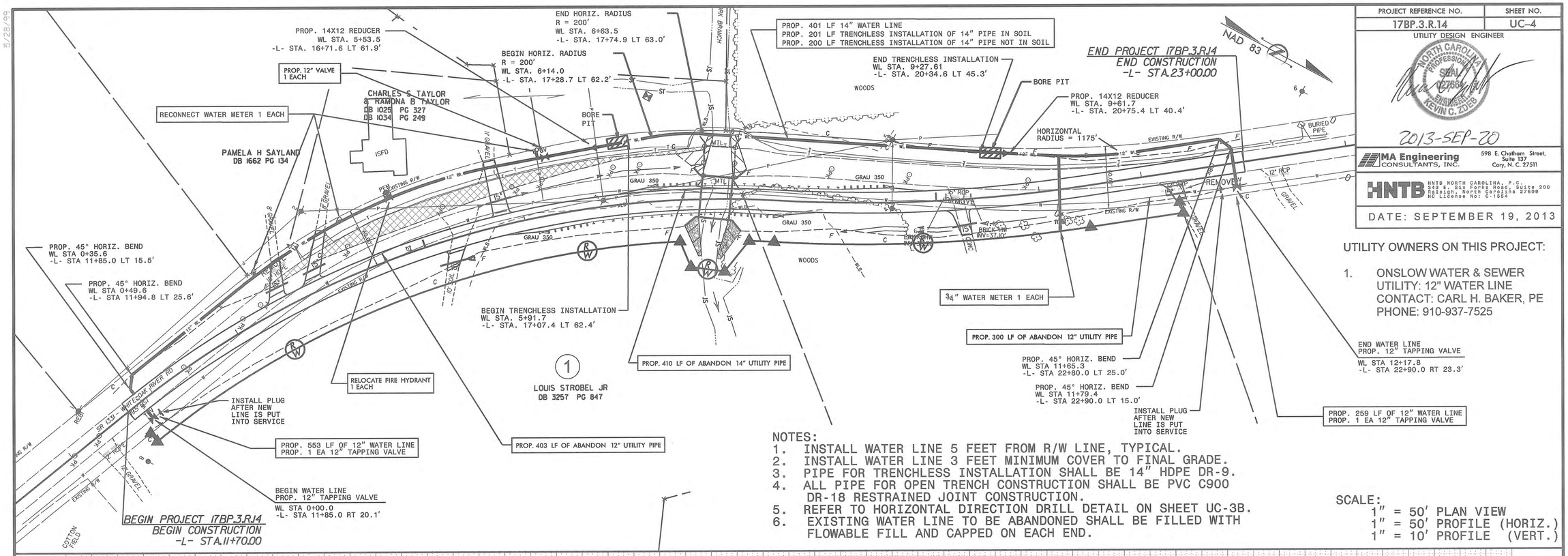

UTILITY OWNERS ON THIS PROJECT:

1. ONSLOW WATER & SEWER UTILITY: 12" WATER LINE CONTACT: CARL H. BAKER, PE PHONE: 910-937-7525

NOTES:
1. INSTALL WATER LINE 5 FEET FROM R/W LINE, TYPICAL.
2. INSTALL WATER LINE 3 FEET MINIMUM COVER TO FINAL GRADE.
3. PIPE FOR TRENCHLESS INSTALLATION SHALL BE 14" HDPE DR-9.
4. ALL PIPE FOR OPEN TRENCH CONSTRUCTION SHALL BE PVC C900 DR-18 RESTRAINED JOINT CONSTRUCTION.
5. REFER TO HORIZONTAL DIRECTION DRILL DETAIL ON SHEET UC-3B.
6. EXISTING WATER LINE TO BE ABANDONED SHALL BE FILLED WITH FLOWABLE FILL AND CAPPED ON EACH END.

SCALE:
1" = 50' PLAN VIEW
1" = 50' PROFILE (HORIZ.)
1" = 10' PROFILE (VERT.)

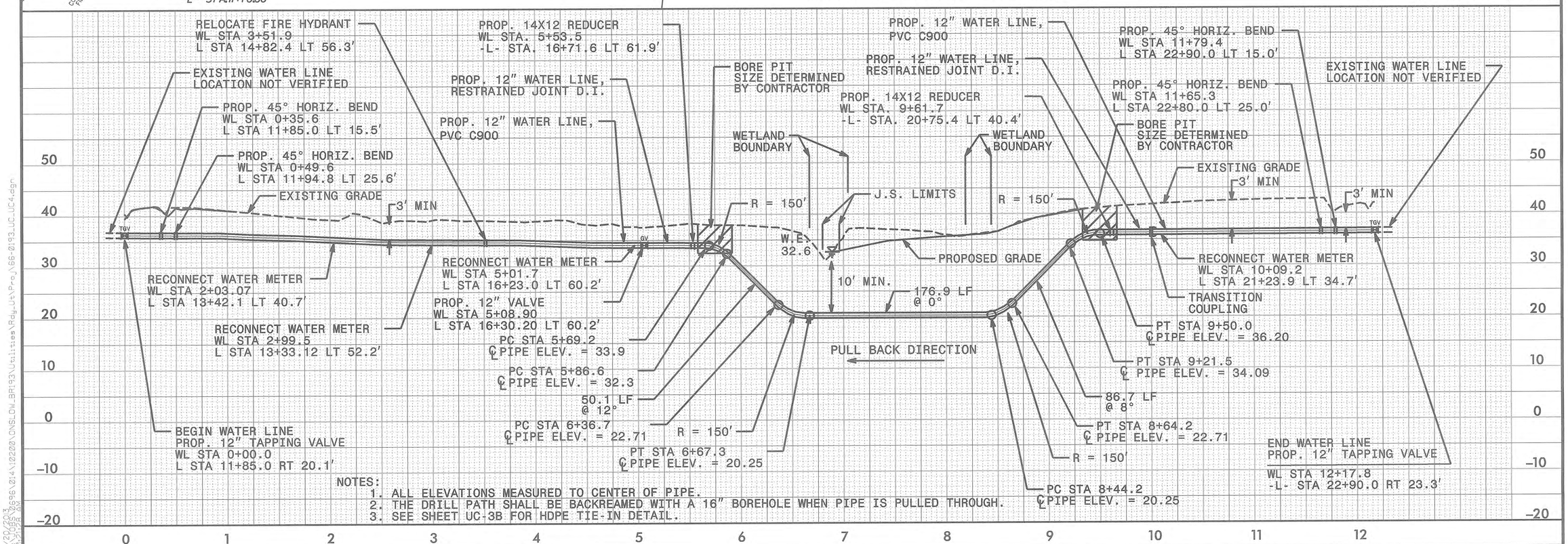

NOTES:
1. ALL ELEVATIONS MEASURED TO CENTER OF PIPE.
2. THE DRILL PATH SHALL BE BACKREAMED WITH A 16" BOREHOLE WHEN PIPE IS PULLED THROUGH.
3. SEE SHEET UC-3B FOR HDPE TIE-IN DETAIL.

5/28/99

9/20/2013 R:\Projects\0696\014\10200\ONSLOW_BR193\Utilities\Rdy_Ut\Proj\66-0193_UC_UC4.dgn 2012/28 AM

09/08/99

TIP PROJECT: 17BP.3.R.14

CONTRACT:

T.I.P. NO.	SHEET NO.
17BP.3.R.14	UO–1

STATE OF NORTH CAROLINA
DIVISION OF HIGHWAYS

UTILITIES BY OTHERS PLANS
ONSLOW COUNTY

LOCATION: BRIDGE NO. 193 OVER UT TO FORK BRANCH ON SR 1331 (WHITE OAK RIVER RD.)

TYPE OF WORK: UTILITY BY OTHERS RELOCATION

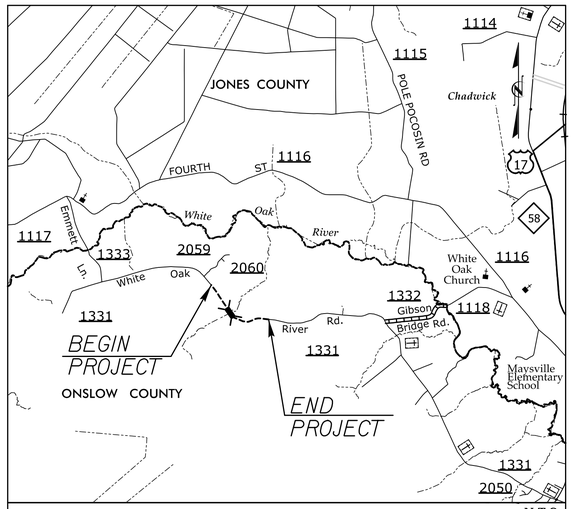

VICINITY MAP — N.T.S. — ONSITE DETOUR

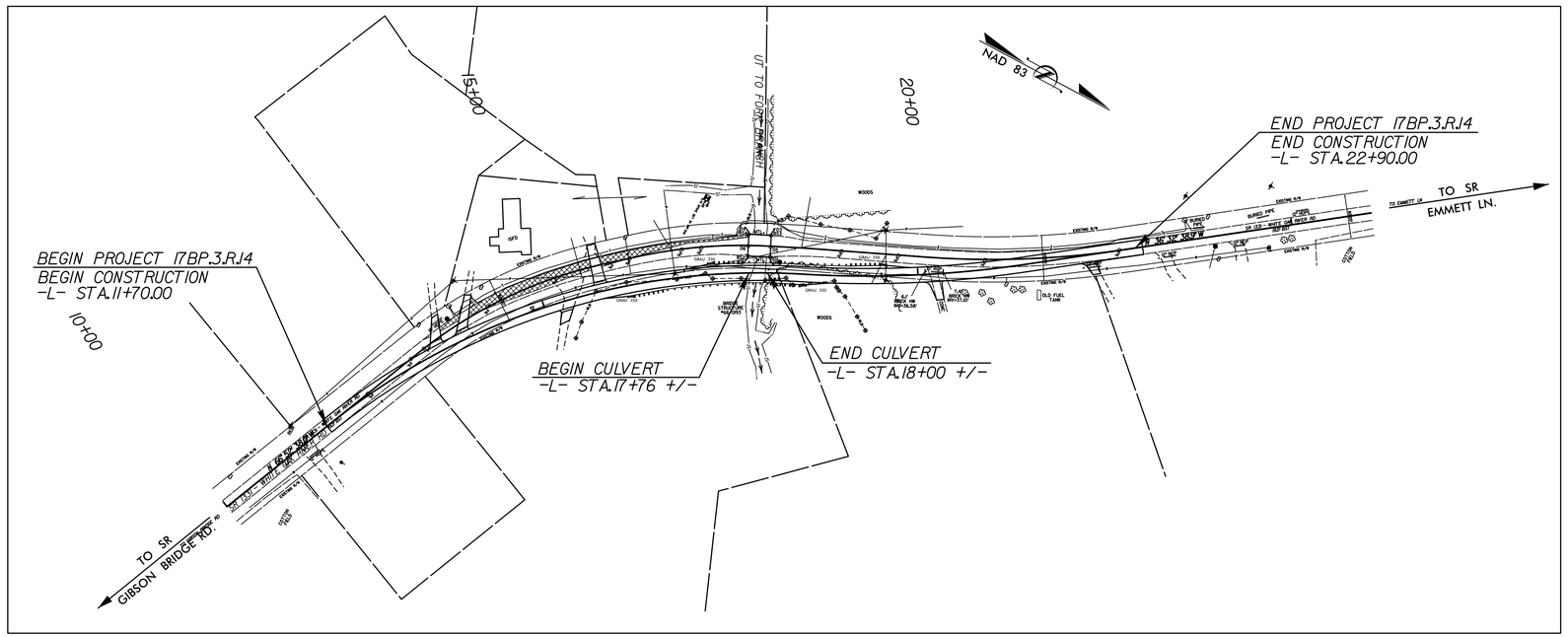

GRAPHIC SCALES

50 25 0 50 100 — PLANS

50 25 0 50 100 — PROFILE (HORIZONTAL)

10 5 0 10 20 — PROFILE (VERTICAL)

INDEX OF SHEETS

SHEET NO.	DESCRIPTION
UO–1	TITLE SHEET
UO–2	PLAN SHEET

UTILITY OWNERS ON PROJECT

(1) POWER – JONES ONSLOW EMC
KEN JONES
UTILITY CONVERSION MANAGER
259 WESTERN BLVD
JACKSONVILLE, NC 28546
910–353–1940 EXT. 306

UTILITY DESIGN BY:
MA Engineering CONSULTANTS, INC.
598 East Chatham Street Suite 137 Cary, NC 27511
Phone: 919 297 0220 Fax: 919 297 0221

NCDOT PROJECT ENGINEER:
AMANDA GLYNN, P.E.
PREPARED FOR:
NORTH CAROLINA
DEPARTMENT OF TRANSPORTATION
DIVISION BRIDGE PROGRAM

3:40:14 PM
**\Utilities\66-0193_UO-1.dgn
$$$$USERNAME$$$$

PROJECT REFERENCE NO.	SHEET NO.
17BP.3.R.14	U0-2

UTILITIES BY OTHERS

NOTE:
ALL PROPOSED UTILITY WORK SHOWN ON THIS SHEET WILL BE DONE BY OTHERS

MA Engineering CONSULTANTS, INC.
598 E. Chatham Street, Suite 137
Cary, N. C. 27511

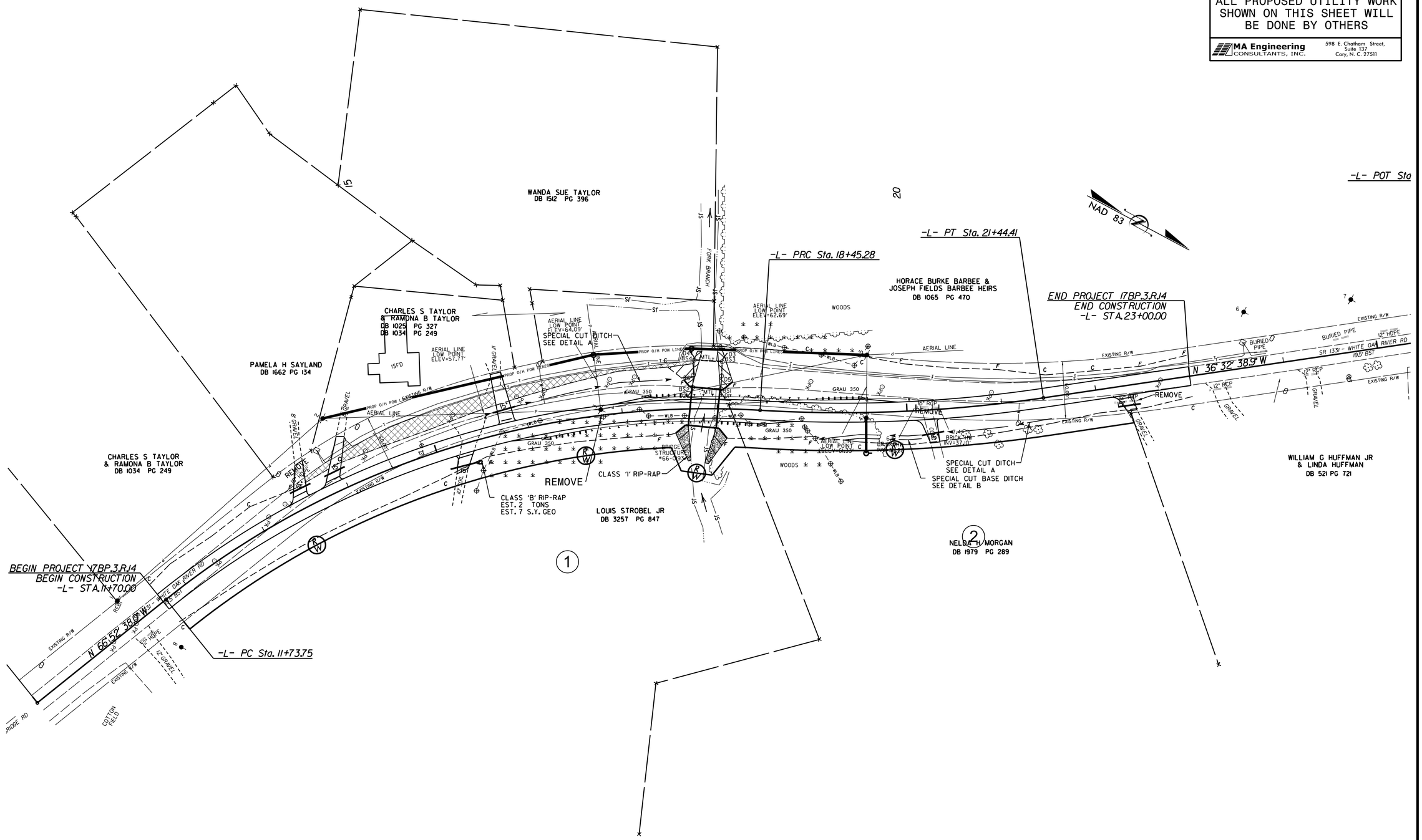

STATE	STATE PROJECT REFERENCE NO.	SHEET NO.	TOTAL SHEETS
N.C.	SF-660193	1	8

STATE PROJ. NO.	F.A. PROJ. NO.	DESCRIPTION
		P.E.
		R/W & UTIL.

NOTE: SEE SHEET 3 FOR PLAN SHEET LAYOUT AT TIME OF INVESTIGATION

STATE OF NORTH CAROLINA
DEPARTMENT OF TRANSPORTATION
DIVISION OF HIGHWAYS
GEOTECHNICAL ENGINEERING UNIT

ROADWAY SUBSURFACE INVESTIGATION

PROJ. REFERENCE NO. 17BP.3.R.14 (SF-660193) F.A. PROJ. _____

COUNTY ONSLOW

PROJECT DESCRIPTION BRIDGE NO. 193 OVER UT TO FORK BRANCH ON SR 1331 (WHITE OAK RIVER RD.)

RECOMMENDATIONS

CONTENTS

LINE	STATION	PLAN	PROFILE
-L-	11+70 TO 23+00	4	5

CROSS SECTIONS

LINE	STATION	PLAN
-L-	15+50 TO 19+00	6-8

CAUTION NOTICE

THE SUBSURFACE INFORMATION AND THE SUBSURFACE INVESTIGATION ON WHICH IT IS BASED WERE MADE FOR THE PURPOSE OF STUDY, PLANNING, AND DESIGN, AND NOT FOR CONSTRUCTION OR PAY PURPOSES. THE VARIOUS FIELD BORING LOGS, ROCK CORES, AND SOIL TEST DATA AVAILABLE MAY BE REVIEWED OR INSPECTED IN RALEIGH BY CONTACTING THE N. C. DEPARTMENT OF TRANSPORTATION GEOTECHNICAL ENGINEERING UNIT AT (919) 707-6850. NEITHER THE SUBSURFACE PLANS AND REPORTS, NOR THE FIELD BORING LOGS, ROCK CORES, OR SOIL TEST DATA ARE PART OF THE CONTRACT.

GENERAL SOIL AND ROCK STRATA DESCRIPTIONS AND INDICATED BOUNDARIES ARE BASED ON A GEOTECHNICAL INTERPRETATION OF ALL AVAILABLE SUBSURFACE DATA AND MAY NOT NECESSARILY REFLECT THE ACTUAL SUBSURFACE CONDITIONS BETWEEN BORINGS OR BETWEEN SAMPLED STRATA WITHIN THE BOREHOLE. THE LABORATORY SAMPLE DATA AND THE IN SITU (IN-PLACE) TEST DATA CAN BE RELIED ON ONLY TO THE DEGREE OF RELIABILITY INHERENT IN THE STANDARD TEST METHOD. THE OBSERVED WATER LEVELS OR SOIL MOISTURE CONDITIONS INDICATED IN THE SUBSURFACE INVESTIGATIONS ARE AS RECORDED AT THE TIME OF THE INVESTIGATION. THESE WATER LEVELS OR SOIL MOISTURE CONDITIONS MAY VARY CONSIDERABLY WITH TIME ACCORDING TO CLIMATIC CONDITIONS INCLUDING TEMPERATURES, PRECIPITATION, AND WIND, AS WELL AS OTHER NON-CLIMATIC FACTORS.

THE BIDDER OR CONTRACTOR IS CAUTIONED THAT DETAILS SHOWN ON THE SUBSURFACE PLANS ARE PRELIMINARY ONLY AND IN MANY CASES THE FINAL DESIGN DETAILS ARE DIFFERENT. FOR BIDDING AND CONSTRUCTION PURPOSES, REFER TO THE CONSTRUCTION PLANS AND DOCUMENTS FOR FINAL DESIGN INFORMATION ON THIS PROJECT. THE DEPARTMENT DOES NOT WARRANT OR GUARANTEE THE SUFFICIENCY OR ACCURACY OF THE INVESTIGATION MADE, NOR THE INTERPRETATIONS MADE, OR OPINION OF THE DEPARTMENT AS TO THE TYPE OF MATERIALS AND CONDITIONS TO BE ENCOUNTERED. THE BIDDER OR CONTRACTOR IS CAUTIONED TO MAKE SUCH INDEPENDENT SUBSURFACE INVESTIGATIONS AS HE DEEMS NECESSARY TO SATISFY HIMSELF AS TO CONDITIONS TO BE ENCOUNTERED ON THIS PROJECT. THE CONTRACTOR SHALL HAVE NO CLAIM FOR ADDITIONAL COMPENSATION OR FOR AN EXTENSION OF TIME FOR ANY REASON RESULTING FROM THE ACTUAL CONDITIONS ENCOUNTERED AT THE SITE DIFFERING FROM THOSE INDICATED IN THE SUBSURFACE INFORMATION.

PERSONNEL
T.C. BOTTOMS

INVESTIGATED BY T.C. BOTTOMS
CHECKED BY D.N. ARGENBRIGHT
SUBMITTED BY D.N. ARGENBRIGHT
DATE JULY 2012

NORTH CAROLINA PROFESSIONAL SEAL 036278 ENGINEER MAJID KHAZAEI
7/17/12

NORTH CAROLINA LICENSED SEAL 2240 GEOLOGIST TYLER C. BOTTOMS
7/17/12

CONTRACT: ID: SF-660193

DRAWN BY: C.P. TURNER

NOTE - THE INFORMATION CONTAINED HEREIN IS NOT IMPLIED OR GUARANTEED BY THE N. C. DEPARTMENT OF TRANSPORTATION AS BEING ACCURATE NOR IT IS CONSIDERED TO BE PART OF THE PLANS, SPECIFICATIONS, OR CONTRACT FOR THE PROJECT.

NOTE - BY HAVING REQUESTED THIS INFORMATION THE CONTRACTOR SPECIFICALLY WAIVES ANY CLAIMS FOR INCREASED COMPENSATION OR EXTENSION OF TIME BASED ON DIFFERENCES BETWEEN THE CONDITIONS INDICATED HEREIN AND THE ACTUAL CONDITIONS AT THE PROJECT SITE.

PROJECT REFERENCE NO.	SHEET NO.
SF-660193	2 OF 8

NORTH CAROLINA DEPARTMENT OF TRANSPORTATION

DIVISION OF HIGHWAYS

GEOTECHNICAL ENGINEERING UNIT

SUBSURFACE INVESTIGATION

SOIL AND ROCK LEGEND, TERMS, SYMBOLS, AND ABBREVIATIONS

SOIL DESCRIPTION

SOIL IS CONSIDERED TO BE THE UNCONSOLIDATED, SEMI-CONSOLIDATED, OR WEATHERED EARTH MATERIALS THAT CAN BE PENETRATED WITH A CONTINUOUS FLIGHT POWER AUGER, AND YIELD LESS THAN 100 BLOWS PER FOOT ACCORDING TO STANDARD PENETRATION TEST (AASHTO T206, ASTM D-1586). SOIL CLASSIFICATION IS BASED ON THE AASHTO SYSTEM. BASIC DESCRIPTIONS GENERALLY SHALL INCLUDE: CONSISTENCY, COLOR, TEXTURE, MOISTURE, AASHTO CLASSIFICATION, AND OTHER PERTINENT FACTORS SUCH AS MINERALOGICAL COMPOSITION, ANGULARITY, STRUCTURE, PLASTICITY, ETC. EXAMPLE:

VERY STIFF, GRAY, SILTY CLAY, MOIST WITH INTERBEDDED FINE SAND LAYERS, HIGHLY PLASTIC, A-7-6

SOIL LEGEND AND AASHTO CLASSIFICATION

GENERAL CLASS.	GRANULAR MATERIALS (≤ 35% PASSING #200)							SILT-CLAY MATERIALS (> 35% PASSING #200)				ORGANIC MATERIALS		
GROUP CLASS.	A-1		A-3	A-2				A-4	A-5	A-6	A-7	A-1, A-2 A-3	A-4, A-5 A-6, A-7	
	A-1-a	A-1-b		A-2-4	A-2-5	A-2-6	A-2-7				A-7-5 A-7-6			
SYMBOL														
% PASSING #10	50 MX											GRANULAR SOILS	SILT-CLAY SOILS	MUCK, PEAT
#40	30 MX	50 MX	51 MN											
#200	15 MX	25 MX	10 MX	35 MX	35 MX	35 MX	35 MX	36 MN	36 MN	36 MN	36 MN			
LIQUID LIMIT				40 MX	41 MN	40 MX	41 MN	40 MX	41 MN	40 MX	41 MN	SOILS WITH LITTLE OR MODERATE AMOUNTS OF ORGANIC MATTER		HIGHLY ORGANIC SOILS
PLASTIC INDEX	6 MX		NP	10 MX	10 MX	11 MN	11 MN	10 MX	10 MX	11 MN	11 MN			
GROUP INDEX	0		0	0		4 MX		8 MX	12 MX	16 MX	16 MX			
USUAL TYPES OF MAJOR MATERIALS	STONE FRAGS. GRAVEL, AND SAND		FINE SAND	SILTY OR CLAYEY GRAVEL AND SAND				SILTY SOILS		CLAYEY SOILS				
GEN. RATING AS A SUBGRADE	EXCELLENT TO GOOD							FAIR TO POOR				FAIR TO POOR	POOR	UNSUITABLE

PI OF A-7-5 SUBGROUP IS ≤ LL - 30 ; PI OF A-7-6 SUBGROUP IS > LL - 30

CONSISTENCY OR DENSENESS

PRIMARY SOIL TYPE	COMPACTNESS OR CONSISTENCY	RANGE OF STANDARD PENETRATION RESISTENCE (N-VALUE)	RANGE OF UNCONFINED COMPRESSIVE STRENGTH (TONS/FT^2)
GENERALLY GRANULAR MATERIAL (NON-COHESIVE)	VERY LOOSE LOOSE MEDIUM DENSE DENSE VERY DENSE	<4 4 TO 10 10 TO 30 30 TO 50 >50	N/A
GENERALLY SILT-CLAY MATERIAL (COHESIVE)	VERY SOFT SOFT MEDIUM STIFF STIFF VERY STIFF HARD	<2 2 TO 4 4 TO 8 8 TO 15 15 TO 30 >30	<0.25 0.25 TO 0.50 0.5 TO 1.0 1 TO 2 2 TO 4 >4

TEXTURE OR GRAIN SIZE

U.S. STD. SIEVE SIZE	4	10	40	60	200	270
OPENING (MM)	4.76	2.00	0.42	0.25	0.075	0.053

BOULDER (BLDR.)	COBBLE (COB.)	GRAVEL (GR.)	COARSE SAND (CSE. SD.)	FINE SAND (F SD.)	SILT (SL.)	CLAY (CL.)

GRAIN SIZE MM: 305 | 75 | 2.0 | 0.25 | 0.05 | 0.005

GRAIN SIZE IN.: 12 | 3

SOIL MOISTURE - CORRELATION OF TERMS

SOIL MOISTURE SCALE (ATTERBERG LIMITS)	FIELD MOISTURE DESCRIPTION	GUIDE FOR FIELD MOISTURE DESCRIPTION
	- SATURATED - (SAT.)	USUALLY LIQUID; VERY WET, USUALLY FROM BELOW THE GROUND WATER TABLE
LL — LIQUID LIMIT		
PLASTIC RANGE (PI)	- WET - (W)	SEMISOLID; REQUIRES DRYING TO ATTAIN OPTIMUM MOISTURE
PL — PLASTIC LIMIT		
OM — OPTIMUM MOISTURE	- MOIST - (M)	SOLID; AT OR NEAR OPTIMUM MOISTURE
SL — SHRINKAGE LIMIT		
	- DRY - (D)	REQUIRES ADDITIONAL WATER TO ATTAIN OPTIMUM MOISTURE

PLASTICITY

	PLASTICITY INDEX (PI)	DRY STRENGTH
NONPLASTIC	0-5	VERY LOW
LOW PLASTICITY	6-15	SLIGHT
MED. PLASTICITY	16-25	MEDIUM
HIGH PLASTICITY	26 OR MORE	HIGH

COLOR

DESCRIPTIONS MAY INCLUDE COLOR OR COLOR COMBINATIONS (TAN, RED, YELLOW-BROWN, BLUE-GRAY). MODIFIERS SUCH AS LIGHT, DARK, STREAKED, ETC. ARE USED TO DESCRIBE APPEARANCE.

GRADATION

WELL GRADED - INDICATES A GOOD REPRESENTATION OF PARTICLE SIZES FROM FINE TO COARSE.
UNIFORM - INDICATES THAT SOIL PARTICLES ARE ALL APPROXIMATELY THE SAME SIZE. (ALSO POORLY GRADED)
GAP-GRADED - INDICATES A MIXTURE OF UNIFORM PARTICLES OF TWO OR MORE SIZES.

ANGULARITY OF GRAINS

THE ANGULARITY OR ROUNDNESS OF SOIL GRAINS IS DESIGNATED BY THE TERMS: ANGULAR, SUBANGULAR, SUBROUNDED, OR ROUNDED.

MINERALOGICAL COMPOSITION

MINERAL NAMES SUCH AS QUARTZ, FELDSPAR, MICA, TALC, KAOLIN, ETC. ARE USED IN DESCRIPTIONS WHENEVER THEY ARE CONSIDERED OF SIGNIFICANCE.

COMPRESSIBILITY

SLIGHTLY COMPRESSIBLE	LIQUID LIMIT LESS THAN 31
MODERATELY COMPRESSIBLE	LIQUID LIMIT EQUAL TO 31-50
HIGHLY COMPRESSIBLE	LIQUID LIMIT GREATER THAN 50

PERCENTAGE OF MATERIAL

ORGANIC MATERIAL	GRANULAR SOILS	SILT - CLAY SOILS
TRACE OF ORGANIC MATTER	2 - 3%	3 - 5%
LITTLE ORGANIC MATTER	3 - 5%	5 - 12%
MODERATELY ORGANIC	5 - 10%	12 - 20%
HIGHLY ORGANIC	>10%	>20%

OTHER MATERIAL	
TRACE	1 - 10%
LITTLE	10 - 20%
SOME	20 - 35%
HIGHLY	35% AND ABOVE

GROUND WATER

- WATER LEVEL IN BORE HOLE IMMEDIATELY AFTER DRILLING
- STATIC WATER LEVEL AFTER 24 HOURS
- PW PERCHED WATER, SATURATED ZONE, OR WATER BEARING STRATA
- SPRING OR SEEP

MISCELLANEOUS SYMBOLS

- ROADWAY EMBANKMENT (RE) WITH SOIL DESCRIPTION
- SOIL SYMBOL
- ARTIFICIAL FILL (AF) OTHER THAN ROADWAY EMBANKMENT
- INFERRED SOIL BOUNDARY
- INFERRED ROCK LINE
- ALLUVIAL SOIL BOUNDARY
- 25/025 DIP & DIP DIRECTION OF ROCK STRUCTURES
- SPT DPT DMT VST PMT TEST BORING
- AUGER BORING
- CORE BORING
- MW MONITORING WELL
- PIEZOMETER INSTALLATION
- SLOPE INDICATOR INSTALLATION
- CONE PENETROMETER TEST
- SOUNDING ROD
- TEST BORING W/ CORE
- SPT N-VALUE
- REF SPT REFUSAL

ABBREVIATIONS

AR - AUGER REFUSAL
BT - BORING TERMINATED
CL. - CLAY
CPT - CONE PENETRATION TEST
CSE. - COARSE
DMT - DILATOMETER TEST
DPT - DYNAMIC PENETRATION TEST
e - VOID RATIO
F - FINE
FOSS. - FOSSILIFEROUS
FRAC. - FRACTURED, FRACTURES
FRAGS. - FRAGMENTS
HI. - HIGHLY
MED. - MEDIUM
MICA. - MICACEOUS
MOD. - MODERATELY
NP - NON PLASTIC
ORG. - ORGANIC
PMT - PRESSUREMETER TEST
SAP. - SAPROLITIC
SD. - SAND, SANDY
SL. - SILT, SILTY
SLI. - SLIGHTLY
TCR - TRICONE REFUSAL
w - MOISTURE CONTENT
V - VERY
VST - VANE SHEAR TEST
WEA. - WEATHERED
γ - UNIT WEIGHT
γ_d - DRY UNIT WEIGHT

SAMPLE ABBREVIATIONS

S - BULK
SS - SPLIT SPOON
ST - SHELBY TUBE
RS - ROCK
RT - RECOMPACTED TRIAXIAL
CBR - CALIFORNIA BEARING RATIO

EQUIPMENT USED ON SUBJECT PROJECT

DRILL UNITS:
- [ ] MOBILE B-___
- [ ] BK-51
- [ ] CME-45C
- [ ] CME-550
- [ ] PORTABLE HOIST
- [ ] _____
- [ ] _____

ADVANCING TOOLS:
- [ ] CLAY BITS
- [ ] 6" CONTINUOUS FLIGHT AUGER
- [ ] 8" HOLLOW AUGERS
- [ ] HARD FACED FINGER BITS
- [ ] TUNG.-CARBIDE INSERTS
- [ ] CASING [ ] W/ ADVANCER
- [ ] TRICONE ____" STEEL TEETH
- [ ] TRICONE ____" TUNG.-CARB.
- [ ] CORE BIT
- [ ] _____

HAMMER TYPE:
- [ ] AUTOMATIC [ ] MANUAL

CORE SIZE:
- [ ] -B_____
- [ ] -N_____
- [ ] -H_____

HAND TOOLS:
- [ ] POST HOLE DIGGER
- [X] HAND AUGER
- [ ] SOUNDING ROD
- [X] VANE SHEAR TEST
- [ ] _____

ROCK DESCRIPTION

HARD ROCK IS NON-COASTAL PLAIN MATERIAL THAT IF TESTED, WOULD YIELD SPT REFUSAL. AN INFERRED ROCK LINE INDICATES THE LEVEL AT WHICH NON-COASTAL PLAIN MATERIAL WOULD YIELD SPT REFUSAL. SPT REFUSAL IS PENETRATION BY A SPLIT SPOON SAMPLER EQUAL TO OR LESS THAN 0.1 FOOT PER 60 BLOWS. IN NON-COASTAL PLAIN MATERIAL, THE TRANSITION BETWEEN SOIL AND ROCK IS OFTEN REPRESENTED BY A ZONE OF WEATHERED ROCK.
ROCK MATERIALS ARE TYPICALLY DIVIDED AS FOLLOWS:

WEATHERED ROCK (WR)	NON-COASTAL PLAIN MATERIAL THAT WOULD YIELD SPT N VALUES > 100 BLOWS PER FOOT IF TESTED.
CRYSTALLINE ROCK (CR)	FINE TO COARSE GRAIN IGNEOUS AND METAMORPHIC ROCK THAT WOULD YIELD SPT REFUSAL IF TESTED. ROCK TYPE INCLUDES GRANITE, GNEISS, GABBRO, SCHIST, ETC.
NON-CRYSTALLINE ROCK (NCR)	FINE TO COARSE GRAIN METAMORPHIC AND NON-COASTAL PLAIN SEDIMENTARY ROCK THAT WOULD YEILD SPT REFUSAL IF TESTED. ROCK TYPE INCLUDES PHYLLITE, SLATE, SANDSTONE, ETC.
COASTAL PLAIN SEDIMENTARY ROCK (CP)	COASTAL PLAIN SEDIMENTS CEMENTED INTO ROCK, BUT MAY NOT YIELD SPT REFUSAL. ROCK TYPE INCLUDES LIMESTONE, SANDSTONE, CEMENTED SHELL BEDS, ETC.

WEATHERING

FRESH	ROCK FRESH, CRYSTALS BRIGHT, FEW JOINTS MAY SHOW SLIGHT STAINING. ROCK RINGS UNDER HAMMER IF CRYSTALLINE.
VERY SLIGHT (V. SLI.)	ROCK GENERALLY FRESH, JOINTS STAINED, SOME JOINTS MAY SHOW THIN CLAY COATINGS IF OPEN, CRYSTALS ON A BROKEN SPECIMEN FACE SHINE BRIGHTLY. ROCK RINGS UNDER HAMMER BLOWS IF OF A CRYSTALLINE NATURE.
SLIGHT (SLI.)	ROCK GENERALLY FRESH, JOINTS STAINED AND DISCOLORATION EXTENDS INTO ROCK UP TO 1 INCH. OPEN JOINTS MAY CONTAIN CLAY. IN GRANITOID ROCKS SOME OCCASIONAL FELDSPAR CRYSTALS ARE DULL AND DISCOLORED. CRISTALLINE ROCKS RING UNDER HAMMER BLOWS.
MODERATE (MOD.)	SIGNIFICANT PORTIONS OF ROCK SHOW DISCOLORATION AND WEATHERING EFFECTS. IN GRANITOID ROCKS, MOST FELDSPARS ARE DULL AND DISCOLORED, SOME SHOW CLAY. ROCK HAS DULL SOUND UNDER HAMMER BLOWS AND SHOWS SIGNIFICANT LOSS OF STRENGTH AS COMPARED WITH FRESH ROCK.
MODERATELY SEVERE (MOD. SEV.)	ALL ROCK EXCEPT QUARTZ DISCOLORED OR STAINED. IN GRANITOID ROCKS, ALL FELDSPARS DULL AND DISCOLORED AND A MAJORITY SHOW KAOLINIZATION. ROCK SHOWS SEVERE LOSS OF STRENGTH AND CAN BE EXCAVATED WITH A GEOLOGIST'S PICK. ROCK GIVES "CLUNK" SOUND WHEN STRUCK. *IF TESTED, WOULD YIELD SPT REFUSAL*
SEVERE (SEV.)	ALL ROCK EXCEPT QUARTZ DISCOLORED OR STAINED. ROCK FABRIC CLEAR AND EVIDENT BUT REDUCED IN STRENGTH TO STRONG SOIL. IN GRANITOID ROCKS ALL FELDSPARS ARE KAOLINIZED TO SOME EXTENT. SOME FRAGMENTS OF STRONG ROCK USUALLY REMAIN. *IF TESTED, YIELDS SPT N VALUES > 100 BPF*
VERY SEVERE (V SEV.)	ALL ROCK EXCEPT QUARTZ DISCOLORED OR STAINED. ROCK FABRIC ELEMENTS ARE DISCERNIBLE BUT THE MASS IS EFFECTIVELY REDUCED TO SOIL STATUS, WITH ONLY FRAGMENTS OF STRONG ROCK REMAINING. SAPROLITE IS AN EXAMPLE OF ROCK WEATHERED TO A DEGREE SUCH THAT ONLY MINOR VESTIGES OF THE ORIGINAL ROCK FABRIC REMAIN. *IF TESTED, YIELDS SPT N VALUES < 100 BPF*
COMPLETE	ROCK REDUCED TO SOIL. ROCK FABRIC NOT DISCERNIBLE, OR DISCERNIBLE ONLY IN SMALL AND SCATTERED CONCENTRATIONS. QUARTZ MAY BE PRESENT AS DIKES OR STRINGERS. SAPROLITE IS ALSO AN EXAMPLE.

ROCK HARDNESS

VERY HARD	CANNOT BE SCRATCHED BY KNIFE OR SHARP PICK. BREAKING OF HAND SPECIMENS REQUIRES SEVERAL HARD BLOWS OF THE GEOLOGIST'S PICK.
HARD	CAN BE SCRATCHED BY KNIFE OR PICK ONLY WITH DIFFICULTY. HARD HAMMER BLOWS REQUIRED TO DETACH HAND SPECIMEN.
MODERATELY HARD	CAN BE SCRATCHED BY KNIFE OR PICK. GOUGES OR GROOVES TO 0.25 INCHES DEEP CAN BE EXCAVATED BY HARD BLOW OF A GEOLOGIST'S PICK. HAND SPECIMENS CAN BE DETACHED BY MODERATE BLOWS.
MEDIUM HARD	CAN BE GROOVED OR GOUGED 0.05 INCHES DEEP BY FIRM PRESSURE OF KNIFE OR PICK POINT. CAN BE EXCAVATED IN SMALL CHIPS TO PIECES 1 INCH MAXIMUM SIZE BY HARD BLOWS OF THE POINT OF A GEOLOGIST'S PICK.
SOFT	CAN BE GROVED OR GOUGED READILY BY KNIFE OR PICK. CAN BE EXCAVATED IN FRAGMENTS FROM CHIPS TO SEVERAL INCHES IN SIZE BY MODERATE BLOWS OF A PICK POINT. SMALL, THIN PIECES CAN BE BROKEN BY FINGER PRESSURE.
VERY SOFT	CAN BE CARVED WITH KNIFE. CAN BE EXCAVATED READILY WITH POINT OF PICK. PIECES 1 INCH OR MORE IN THICKNESS CAN BE BROKEN BY FINGER PRESSURE. CAN BE SCRATCHED READILY BY FINGERNAIL.

FRACTURE SPACING

TERM	SPACING
VERY WIDE	MORE THAN 10 FEET
WIDE	3 TO 10 FEET
MODERATELY CLOSE	1 TO 3 FEET
CLOSE	0.16 TO 1 FEET
VERY CLOSE	LESS THAN 0.16 FEET

BEDDING

TERM	THICKNESS
VERY THICKLY BEDDED	> 4 FEET
THICKLY BEDDED	1.5 - 4 FEET
THINLY BEDDED	0.16 - 1.5 FEET
VERY THINLY BEDDED	0.03 - 0.16 FEET
THICKLY LAMINATED	0.008 - 0.03 FEET
THINLY LAMINATED	< 0.008 FEET

INDURATION

FOR SEDIMENTARY ROCKS, INDURATION IS THE HARDENING OF THE MATERIAL BY CEMENTING, HEAT, PRESSURE, ETC.

FRIABLE	RUBBING WITH FINGER FREES NUMEROUS GRAINS; GENTLE BLOW BY HAMMER DISINTEGRATES SAMPLE.
MODERATELY INDURATED	GRAINS CAN BE SEPARATED FROM SAMPLE WITH STEEL PROBE; BREAKS EASILY WHEN HIT WITH HAMMER.
INDURATED	GRAINS ARE DIFFICULT TO SEPARATE WITH STEEL PROBE; DIFFICULT TO BREAK WITH HAMMER.
EXTREMELY INDURATED	SHARP HAMMER BLOWS REQUIRED TO BREAK SAMPLE; SAMPLE BREAKS ACROSS GRAINS.

TERMS AND DEFINITIONS

ALLUVIUM (ALLUV.) - SOILS THAT HAVE BEEN TRANSPORTED BY WATER.

AQUIFER - A WATER BEARING FORMATION OR STRATA.

ARENACEOUS - APPLIED TO ROCKS THAT HAVE BEEN DERIVED FROM SAND OR THAT CONTAIN SAND.

ARGILLACEOUS - APPLIED TO ALL ROCKS OR SUBSTANCES COMPOSED OF CLAY MINERALS, OR HAVING A NOTABLE PROPORTION OF CLAY IN THEIR COMPOSITION, AS SHALE, SLATE, ETC.

ARTESIAN - GROUND WATER THAT IS UNDER SUFFICIENT PRESSURE TO RISE ABOVE THE LEVEL AT WHICH IT IS ENCOUNTERED, BUT WHICH DOES NOT NECESSARILY RISE TO OR ABOVE THE GROUND SURFACE.

CALCAREOUS (CALC.) - SOILS THAT CONTAIN APPRECIABLE AMOUNTS OF CALCIUM CARBONATE.

COLLUVIUM - ROCK FRAGMENTS MIXED WITH SOIL DEPOSITED BY GRAVITY ON SLOPE OR AT BOTTOM OF SLOPE.

CORE RECOVERY (REC.) - TOTAL LENGTH OF ALL MATERIAL RECOVERED IN THE CORE BARREL DIVIDED BY TOTAL LENGTH OF CORE RUN AND EXPRESSED AS A PERCENTAGE.

DIKE - A TABULAR BODY OF IGNEOUS ROCK THAT CUTS ACROSS THE STRUCTURE OF ADJACENT ROCKS OR CUTS MASSIVE ROCK.

DIP - THE ANGLE AT WHICH A STRATUM OR ANY PLANAR FEATURE IS INCLINED FROM THE HORIZONTAL.

DIP DIRECTION (DIP AZIMUTH) - THE DIRECTION OR BEARING OF THE HORIZONTAL TRACE OF THE LINE OF DIP, MEASURED CLOCKWISE FROM NORTH.

FAULT - A FRACTURE OR FRACTURE ZONE ALONG WHICH THERE HAS BEEN DISPLACEMENT OF THE SIDES RELATIVE TO ONE ANOTHER PARALLEL TO THE FRACTURE.

FISSILE - A PROPERTY OF SPLITTING ALONG CLOSELY SPACED PARALLEL PLANES.

FLOAT - ROCK FRAGMENTS ON SURFACE NEAR THEIR ORIGINAL POSITION AND DISLODGED FROM PARENT MATERIAL.

FLOOD PLAIN (FP) - LAND BORDERING A STREAM, BUILT OF SEDIMENTS DEPOSITED BY THE STREAM.

FORMATION (FM.) - A MAPPABLE GEOLOGIC UNIT THAT CAN BE RECOGNIZED AND TRACED IN THE FIELD.

JOINT - FRACTURE IN ROCK ALONG WHICH NO APPRECIABLE MOVEMENT HAS OCCURRED.

LEDGE - A SHELF-LIKE RIDGE OR PROJECTION OF ROCK WHOSE THICKNESS IS SMALL COMPARED TO ITS LATERAL EXTENT.

LENS - A BODY OF SOIL OR ROCK THAT THINS OUT IN ONE OR MORE DIRECTIONS.

MOTTLED (MOT.) - IRREGULARLY MARKED WITH SPOTS OF DIFFERENT COLORS. MOTTLING IN SOILS USUALLY INDICATES POOR AERATION AND LACK OF GOOD DRAINAGE.

PERCHED WATER - WATER MAINTAINED ABOVE THE NORMAL GROUND WATER LEVEL BY THE PRESENCE OF AN INTERVENING IMPERVIOUS STRATUM.

RESIDUAL (RES.) SOIL - SOIL FORMED IN PLACE BY THE WEATHERING OF ROCK.

ROCK QUALITY DESIGNATION (RQD) - A MEASURE OF ROCK QUALITY DESCRIBED BY TOTAL LENGTH OF ROCK SEGMENTS EQUAL TO OR GREATER THAN 4 INCHES DIVIDED BY THE TOTAL LENGTH OF CORE RUN AND EXPRESSED AS A PERCENTAGE.

SAPROLITE (SAP.) - RESIDUAL SOIL THAT RETAINS THE RELIC STRUCTURE OR FABRIC OF THE PARENT ROCK.

SILL - AN INTRUSIVE BODY OF IGNEOUS ROCK OF APPROXIMATELY UNIFORM THICKNESS AND RELATIVELY THIN COMPARED WITH ITS LATERAL EXTENT, THAT HAS BEEN EMPLACED PARALLEL TO THE BEDDING OR SCHISTOSITY OF THE INTRUDED ROCKS.

SLICKENSIDE - POLISHED AND STRIATED SURFACE THAT RESULTS FROM FRICTION ALONG A FAULT OR SLIP PLANE.

STANDARD PENETRATION TEST (PENETRATION RESISTANCE) (SPT) - NUMBER OF BLOWS (N OR BPF) OF A 140 LB. HAMMER FALLING 30 INCHES REQUIRED TO PRODUCE A PENETRATION OF 1 FOOT INTO SOIL WITH A 2 INCH OUTSIDE DIAMETER SPLIT SPOON SAMPLER. SPT REFUSAL IS PENETRATION EQUAL TO OR LESS THAN 0.1 FOOT PER 60 BLOWS.

STRATA CORE RECOVERY (SREC.) - TOTAL LENGTH OF STRATA MATERIAL RECOVERED DIVIDED BY TOTAL LENGTH OF STRATUM AND EXPRESSED AS A PERCENTAGE.

STRATA ROCK QUALITY DESIGNATION (SRQD) - A MEASURE OF ROCK QUALITY DESCRIBED BY TOTAL LENGTH OF ROCK SEGMENTS WITHIN A STRATUM EQUAL TO OR GREATER THAN 4 INCHES DIVIDED BY THE TOTAL LENGTH OF STRATA AND EXPRESSED AS A PERCENTAGE.

TOPSOIL (TS.) - SURFACE SOILS USUALLY CONTAINING ORGANIC MATTER.

BENCH MARK:

ELEVATION: FT.

NOTES:

APPROXIMATE LIMITS OF ORGANIC SOILS

VST VANE SHEER TEST

STATE	PROJECT REFERENCE NO.	SHEET NO.	TOTAL SHEETS
NC	17BP.3.R.14	3	8

STATE PROJ. NO.		DESCRIPTION
17BP.3.R.14		CONST

PROJECT: 17BP.3.R.14

CONTRACT:

See Sheet 1-A For Index of Sheets

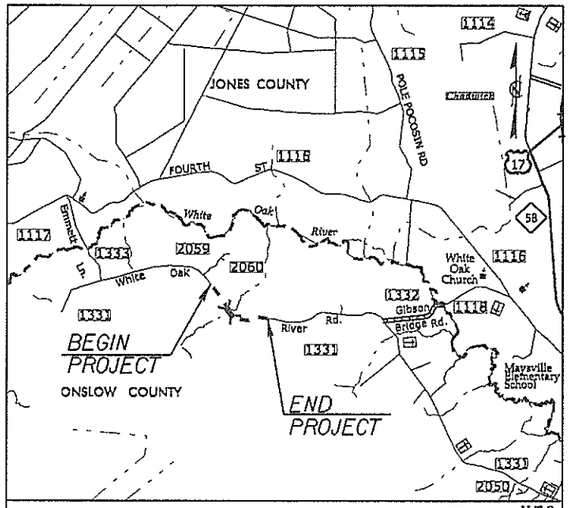

VICINITY MAP

N.T.S.

ONSITE DETOUR

STATE OF NORTH CAROLINA
DIVISION OF HIGHWAYS

ONSLOW COUNTY

LOCATION: BRIDGE NO. 193 OVER UT TO FORK BRANCH ON SR 1331 (WHITE OAK RIVER RD.)

TYPE OF WORK: GRADING, PAVING, WIDENING, DRAINAGE, CULVERT & GUARDRAIL

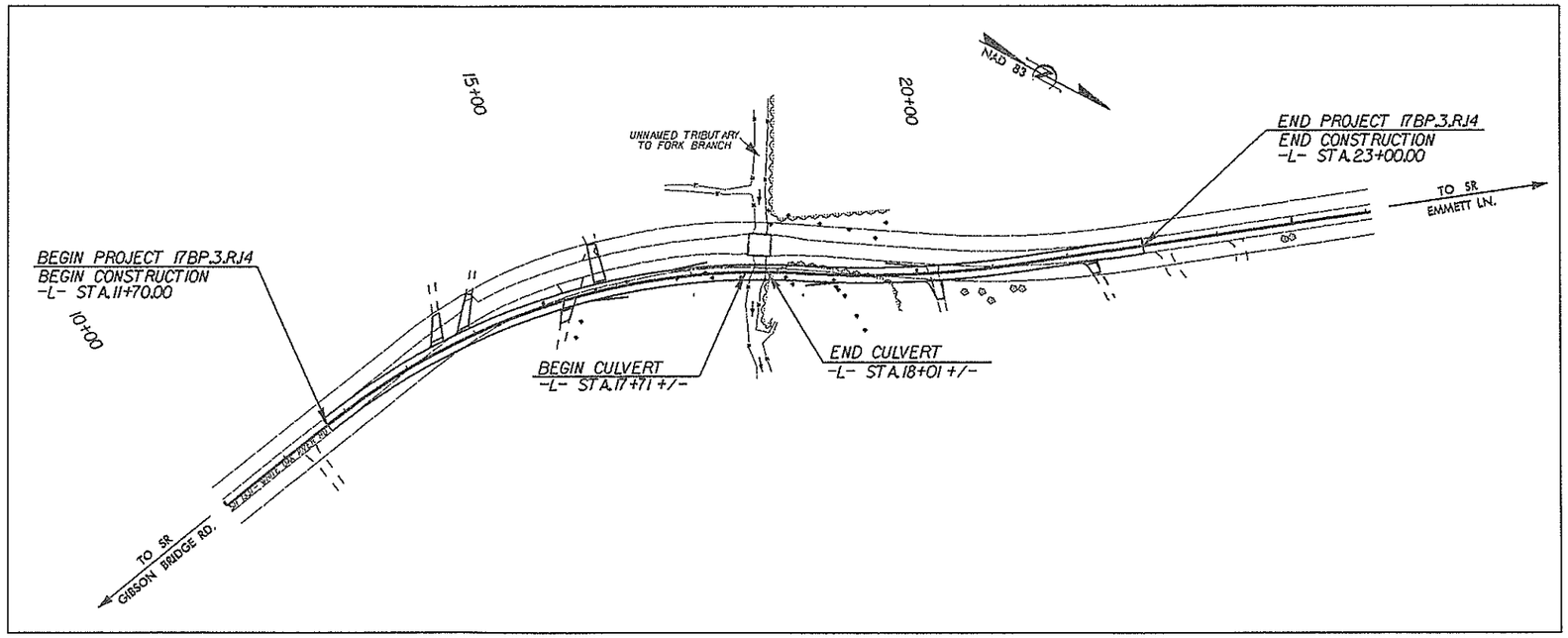

CLEARING ON THIS PROJECT SHALL BE PERFORMED TO THE LIMITS ESTABLISHED BY METHOD II.

GRAPHIC SCALES

50 25 0 50 100
PLANS

50 25 0 50 100
PROFILE (HORIZONTAL)

10 5 0 10 20
PROFILE (VERTICAL)

DESIGN DATA

ADT 2005 = 1300
ADT 2035 = 2600
DHV = 10%
D = 60%
T = 6% *
STATUTORY = 55 MPH
ADVISORY = 40 MPH
* TTST 2% DUAL 4%

PROJECT LENGTH

LENGTH OF ROADWAY PROJECT 17BP.3.R.14 = 0.21 MI.
LENGTH OF STRUCTURE PROJECT 17BP.3.R.14 = 0.00 MI.
TOTAL LENGTH OF PROJECT 17BP.3.R.14 = 0.21 MI.

Prepared in the Office of:

HNTB NORTH CAROLINA, P.C.
343 E. Six Forks Road, Suite 200
Raleigh, North Carolina 27609
NC License No: C-1554

2012 STANDARD SPECIFICATIONS

RIGHT OF WAY DATE:
MAY 31, 2012

LETTING DATE:
DECEMBER 20, 2012

ENRICO A. ROQUE, P.E.
PROJECT ENGINEER

ANTHONY THOMPSON, P.E.
PROJECT DESIGNER

AMANDA GLYNN, P.E.
NCDOT CONTACT

HYDRAULICS ENGINEER
SIGNATURE: P.E.

ROADWAY DESIGN ENGINEER
SIGNATURE: P.E.

DIVISION OF HIGHWAYS
STATE OF NORTH CAROLINA

P.E.
STATE HIGHWAY DESIGN ENGINEER

$$$$DATE$$$$
17-JUL-2012 08:58
L:\ERO\Greenville Investigation\TIP\SF660193_GEO_RDY_ONSLOW\CADD_GEOTECH\Site&Sub\SF660193_GEO_RDY_TITLE.dgn

PROJECT REFERENCE NO.	SHEET NO.
SF-6601.93	4
R/W SHEET NO.	
ROADWAY DESIGN ENGINEER	HYDRAULICS ENGINEER

INCOMPLETE PLANS
DO NOT USE FOR R/W ACQUISITION

PRELIMINARY PLANS
DO NOT USE FOR CONSTRUCTION

8/17/99

REVISIONS

NAD 83

-L-

PI Sta 15+25.59	PI Sta 19+95.39
Δ = 42° 14' 05.6" (RT)	Δ = 11° 54' 06.6" (LT)
D = 6° 17' 21.6"	D = 3° 58' 43.9"
L = 671.53'	L = 299.13'
T = 351.84'	T = 150.10'
R = 911.00'	R = 1,440.00'

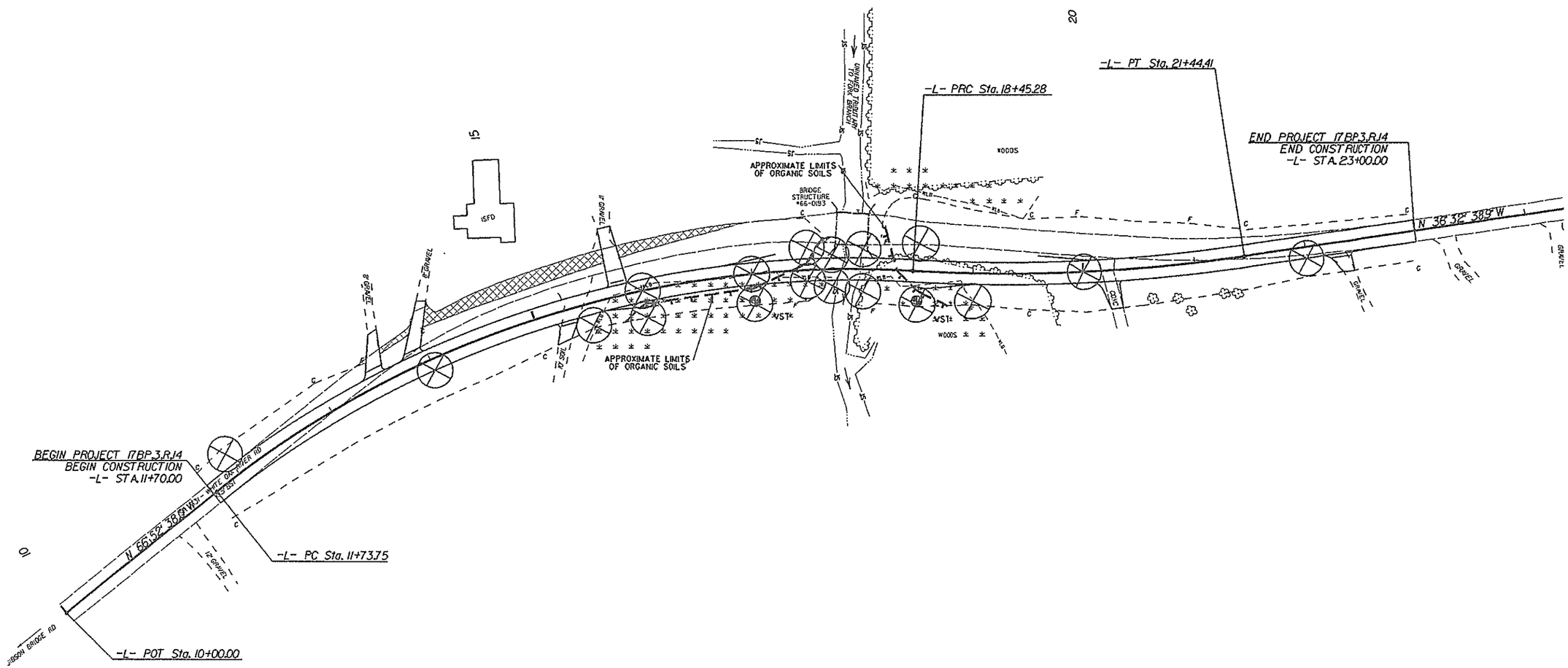

17-JUL-2012 09:00
C:\FHWA\Greenville_Investigation\TIP\SF6601.93_GEO_RDY_ONSLOW\CADD_GEOTECH\Site&Sub\66-0193_rdy_dsn.dgn

5/28/99

PROJECT REFERENCE NO.	SHEET NO.
SF-660193	5
ROADWAY DESIGN ENGINEER	HYDRAULICS ENGINEER

INCOMPLETE PLANS
DO NOT USE FOR R/W ACQUISITION

PRELIMINARY PLANS
DO NOT USE FOR CONSTRUCTION

Ⓐ MEDIUM STIFF ORANGE, GRAY AND BROWN SANDY SILT, MOIST TO WET (ALLUVIAL)

Ⓑ MEDIUM STIFF TO STIFF BROWN MODERATELY ORGANIC SAND, MOIST TO SATURATED, AND SOFT BROWN SILT WITH LITTLE ORGANIC MATERIAL, MOIST TO WET (ALLUVIAL)

Ⓒ STIFF ORANGE SANDY CLAY, MOIST (ROADWAY EMBANKMENT)

Ⓓ MEDIUM DENSE BROWN SAND, MOIST (ROADWAY EMBANKMENT)

SOIL TEST RESULTS

SAMPLE NO.	OFFSET	STATION	DEPTH INTERVAL	AASHTO CLASS.	L.L.	P.I.	% BY WEIGHT C.SAND	F.SAND	SILT	CLAY	% PASSING (SIEVES) 10	40	200	% MOISTURE	% ORGANIC
S-1	22 LT	12+00	0.0-4.0	A-4(1)	26	10	16.0	46.6	15.1	22.3	100	96	40	19.0	-
S-2	22 LT	12+00	4.0-6.0	A-2-4(0)	21	NP	19.5	63.2	4.2	13.2	96	87	18	-	-
S-3	10 RT	14+00	0.0-4.0	A-2-4(0)	17	1	20.1	54.7	11.0	14.2	97	90	27	-	-
S-4	10 RT	14+00	4.0-6.0	A-2-6(0)	30	14	35.9	40.5	4.4	19.3	86	67	21	-	-
S-5	CL	16+00	0.0-6.0	A-2-4(0)	19	2	36.1	34.7	19.1	10.1	99	86	32	-	-
S-7	CL	20+00	0.0-6.0	A-2-6(0)	32	12	43.4	33.7	6.7	16.2	98	78	24	27.0	-

VANE SHEAR TESTS

STATION	OFFSET	DEPTH	SR (psf)
17+00	24 RT	0.5	1211
17+00	24 RT	1.0	1086
17+00	24 RT	1.5	814
17+00	24 RT	2.0	940
17+00	24 RT	2.5	1086
17+00	24 RT	3.0	1420
18+50	27 RT	0.5	1086
18+50	27 RT	1.0	1420
18+50	27 RT	1.5	1002
18+50	27 RT	2.0	563
18+50	27 RT	2.5	1002
18+50	27 RT	3.0	668
18+50	27 RT	3.5	1503

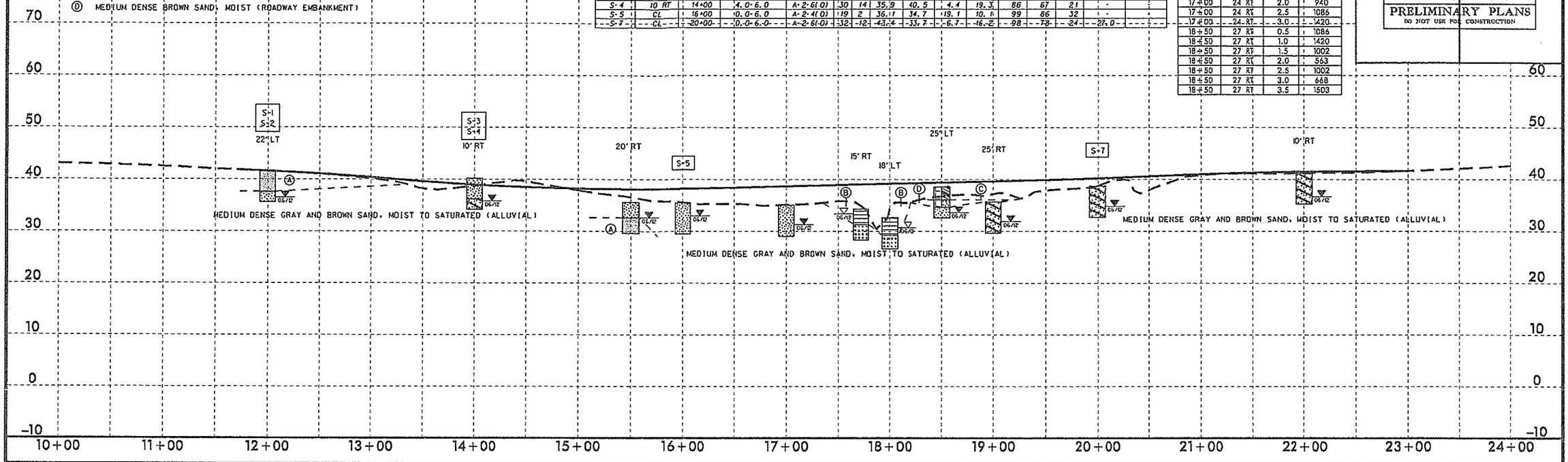

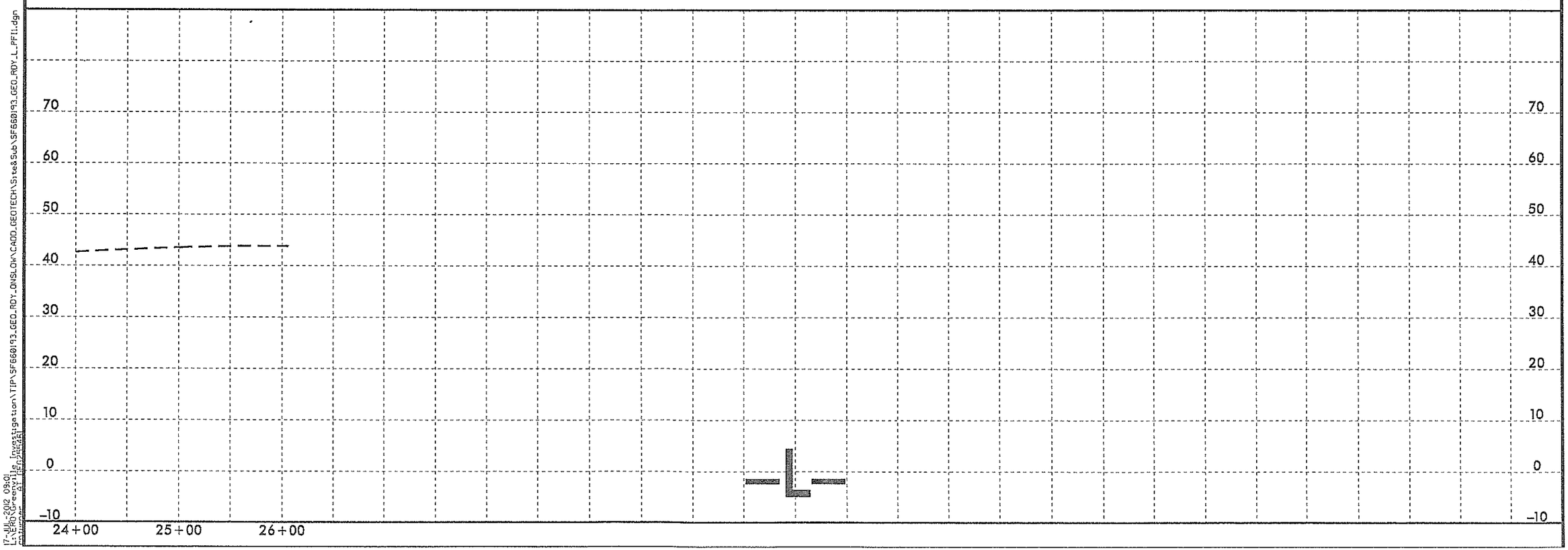

17-JUL-2002 09:01
C:\PROJECTS\Greenville Investigation\TIP\SF660193_GEO_RDY_ONSLOW\CADD_GEOTECH\Site&Sub\SF660193_GEO_RDY_L_PFI1.dgn

PROJ. REFERENCE NO.	SHEET NO.
SF-660193	6

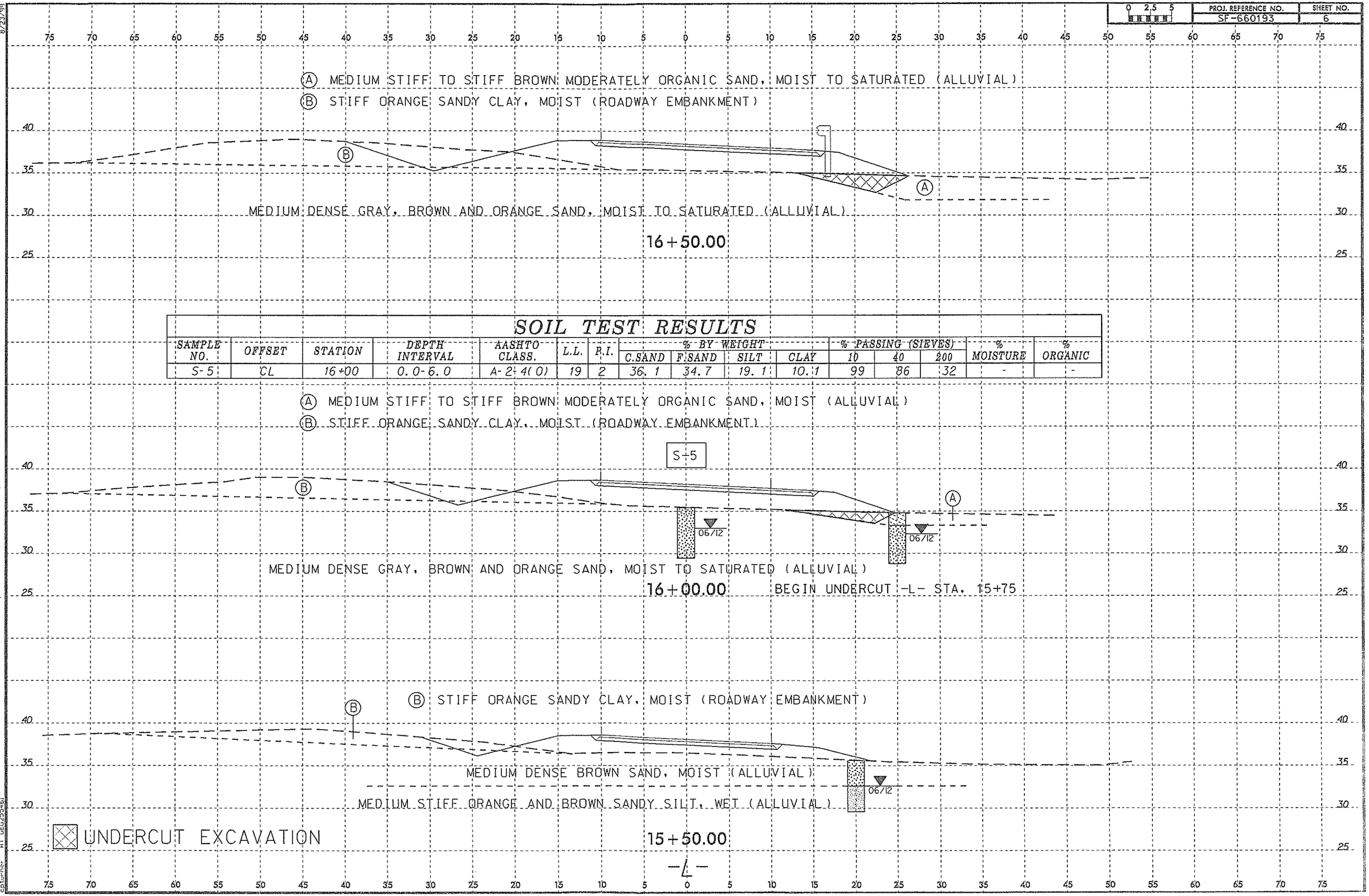

SOIL TEST RESULTS

SAMPLE NO.	OFFSET	STATION	DEPTH INTERVAL	AASHTO CLASS.	L.L.	P.I.	% BY WEIGHT C.SAND	% BY WEIGHT F.SAND	% BY WEIGHT SILT	% BY WEIGHT CLAY	% PASSING (SIEVES) 10	% PASSING (SIEVES) 40	% PASSING (SIEVES) 200	% MOISTURE	% ORGANIC
S-5	CL	16+00	0.0-6.0	A-2-4(0)	19	2	36.1	34.7	19.1	10.1	99	86	32	-	-

8/23/99
16-JUL-2012 14:31
L:\HEAD\Greenville\Geotechnical Investigation\TIP\SF660193_GEO_RDY_ONSLOW\CADD_GEOTECH\xsec\SF660193_GEO_RDY_xsr.dgn
pburner AT DEC2530

PROJ. REFERENCE NO.	SHEET NO.
SF-660193	7

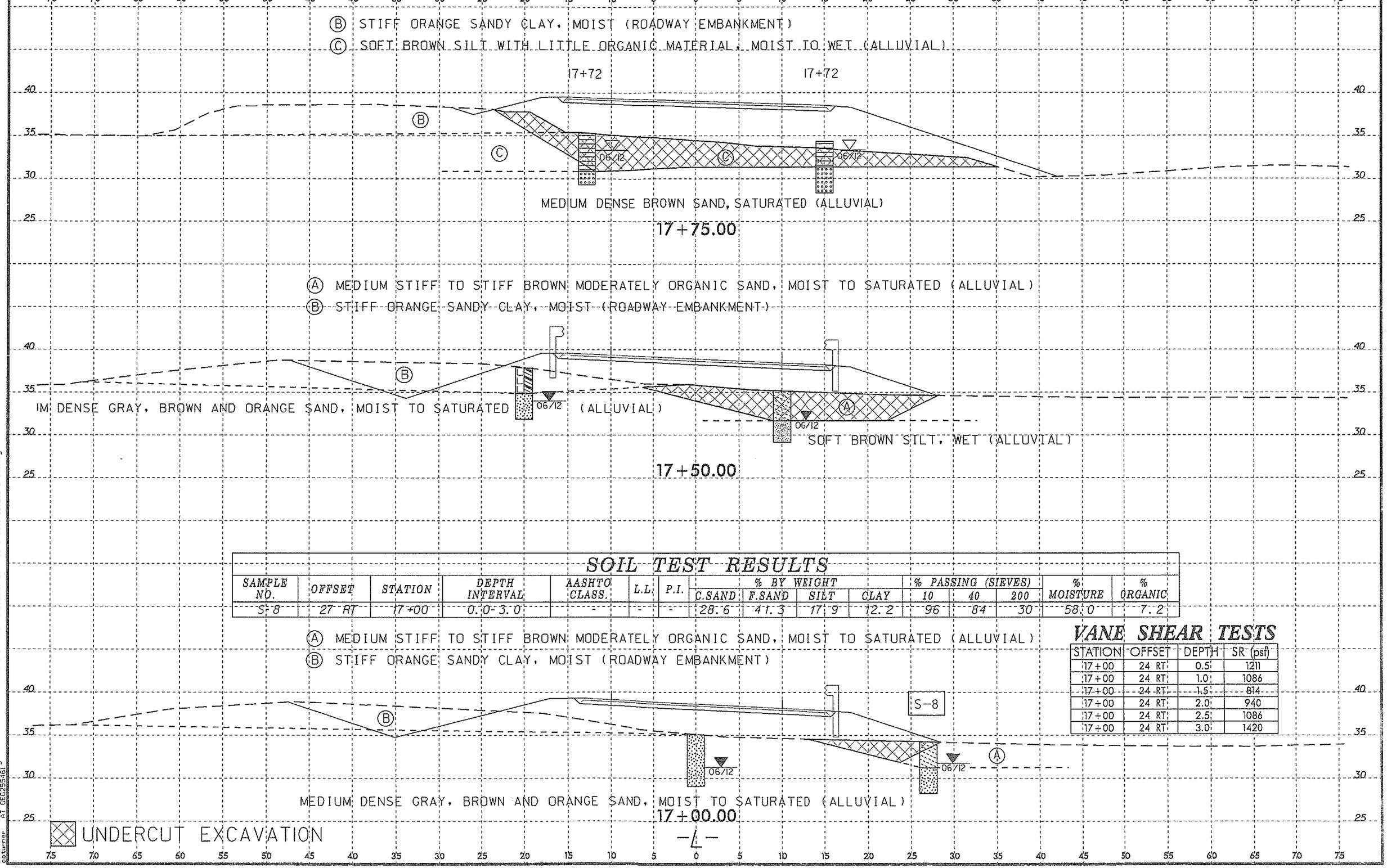

SOIL TEST RESULTS

SAMPLE NO.	OFFSET	STATION	DEPTH INTERVAL	AASHTO CLASS.	L.L.	P.I.	% BY WEIGHT C.SAND	F.SAND	SILT	CLAY	% PASSING (SIEVES) 10	40	200	% MOISTURE	% ORGANIC
S-8	27 RT	17+00	0.0-3.0	-	-	-	28.6	41.3	17.9	12.2	96	84	30	58.0	7.2

VANE SHEAR TESTS

STATION	OFFSET	DEPTH	SR (psf)
17+00	24 RT	0.5	1211
17+00	24 RT	1.0	1086
17+00	24 RT	1.5	814
17+00	24 RT	2.0	940
17+00	24 RT	2.5	1086
17+00	24 RT	3.0	1420

8/23/99

(6-JUL-2012 14:31)
c:\pw_work\pw_temp\pw0000\GEO_255481\
courtner

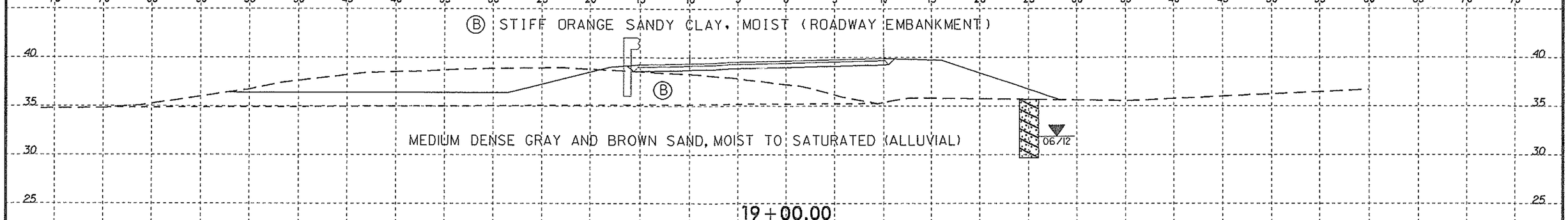

SOIL TEST RESULTS

SAMPLE NO.	OFFSET	STATION	DEPTH INTERVAL	AASHTO CLASS.	L.L.	P.I.	% BY WEIGHT C.SAND	F.SAND	SILT	CLAY	% PASSING (SIEVES) 10	40	200	% MOISTURE	% ORGANIC
S-6	30 RT	18+50	0.0-3.5	-	-	-	15.6	57.1	17.1	10.1	98	85	28	-	8.2

Ⓐ MEDIUM STIFF TO STIFF BROWN MODERATELY ORGANIC SAND, MOIST TO SATURATED (ALLUVIAL)
Ⓑ STIFF ORANGE SANDY CLAY, MOIST (ROADWAY EMBANKMENT)
Ⓒ MEDIUM DENSE BROWN SAND, MOIST (ROADWAY EMBANKMENT)

VANE SHEAR TESTS

STATION	OFFSET	DEPTH	SR (psf)
18+50	27 RT	0.5	1086
18+50	27 RT	1.0	1420
18+50	27 RT	1.5	1002
18+50	27 RT	2.0	563
18+50	27 RT	2.5	1002
18+50	27 RT	3.0	668
18+50	27 RT	3.5	1503

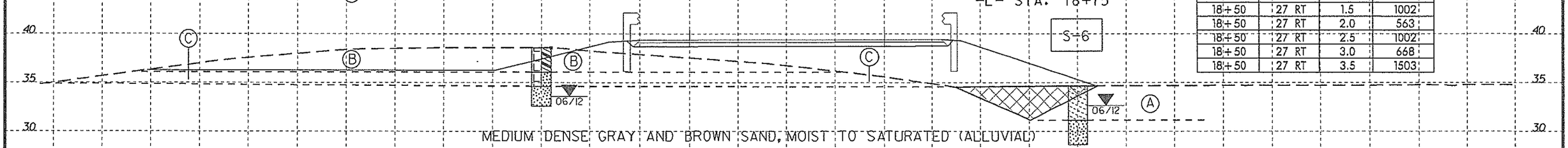

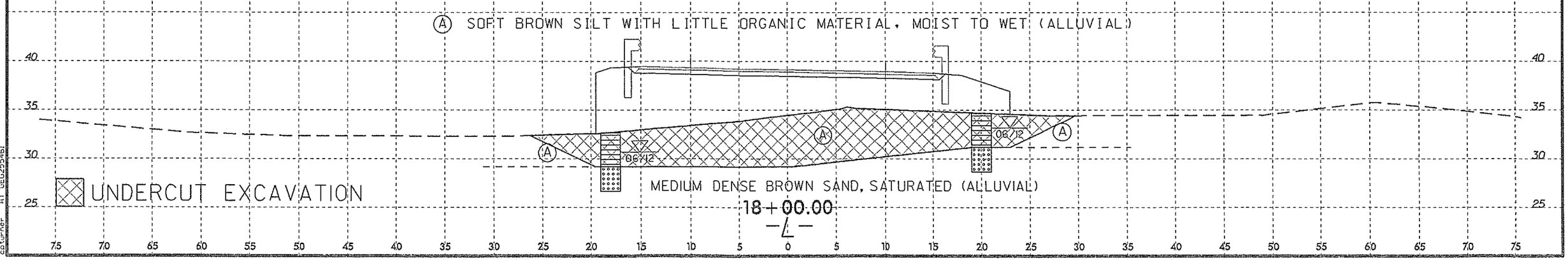

8/23/99
16-JUL-2012 14:33
C:\Bentley\Projects\Site Investigation\TIP\SF660193_GEO_RDY_ONSLOW\CADD_GEOTECH\xsec\SF660193_GEO_RDY_xsec.dgn
Microstation Version: V8 (25516)

STATE	STATE PROJECT REFERENCE NO.	SHEET NO.	TOTAL SHEETS
N.C.	SF-660193	1	9

STATE OF NORTH CAROLINA
DEPARTMENT OF TRANSPORTATION
DIVISION OF HIGHWAYS
GEOTECHNICAL ENGINEERING UNIT

STRUCTURE SUBSURFACE INVESTIGATION

PROJ. REFERENCE NO. 17BP.3.R.14 (SF-660193) F.A. PROJ. _____

COUNTY ONSLOW

PROJECT DESCRIPTION BRIDGE NO. 193 ON SR 1331 (WHITE OAK RIVER RD.) OVER UNNAMED TRIBUTARY TO FORK BRANCH AT -L- STA. 17+86

PROJECT: 17BP.3.R.14

ID: SF-660193

CONTENTS

SHEET	DESCRIPTION
1	TITLE SHEET
2	LEGEND
3	SITE PLAN
4	PROFILE
5-6	CROSS SECTIONS
7-9	BORE LOGS

CAUTION NOTICE

THE SUBSURFACE INFORMATION AND THE SUBSURFACE INVESTIGATION ON WHICH IT IS BASED WERE MADE FOR THE PURPOSE OF STUDY, PLANNING, AND DESIGN AND NOT FOR CONSTRUCTION OR PAY PURPOSES. THE VARIOUS FIELD BORING LOGS, ROCK CORES, AND SOIL TEST DATA AVAILABLE MAY BE REVIEWED OR INSPECTED IN RALEIGH BY CONTACTING THE N. C. DEPARTMENT OF TRANSPORTATION, GEOTECHNICAL ENGINEERING UNIT AT (919) 707-6850. NEITHER THE SUBSURFACE PLANS AND REPORTS, NOR THE FIELD BORING LOGS, ROCK CORES, OR SOIL TEST DATA ARE PART OF THE CONTRACT.

GENERAL SOIL AND ROCK STRATA DESCRIPTIONS AND INDICATED BOUNDARIES ARE BASED ON A GEOTECHNICAL INTERPRETATION OF ALL AVAILABLE SUBSURFACE DATA AND MAY NOT NECESSARILY REFLECT THE ACTUAL SUBSURFACE CONDITIONS BETWEEN BORINGS OR BETWEEN SAMPLED STRATA WITHIN THE BOREHOLE. THE LABORATORY SAMPLE DATA AND THE IN SITU (IN-PLACE) TEST DATA CAN BE RELIED ON ONLY TO THE DEGREE OF RELIABILITY INHERENT IN THE STANDARD TEST METHOD. THE OBSERVED WATER LEVELS OR SOIL MOISTURE CONDITIONS INDICATED ON THE SUBSURFACE INVESTIGATIONS ARE AS RECORDED AT THE TIME OF THE INVESTIGATION. THESE WATER LEVELS OR SOIL MOISTURE CONDITIONS MAY VARY CONSIDERABLY WITH TIME ACCORDING TO CLIMATIC CONDITIONS INCLUDING TEMPERATURES, PRECIPITATION, AND WIND, AS WELL AS OTHER NON-CLIMATIC FACTORS.

THE BIDDER OR CONTRACTOR IS CAUTIONED THAT DETAILS SHOWN ON THE SUBSURFACE PLANS ARE PRELIMINARY ONLY AND IN MANY CASES THE FINAL DESIGN DETAILS ARE DIFFERENT. FOR BIDDING AND CONSTRUCTION PURPOSES, REFER TO THE CONSTRUCTION PLANS AND DOCUMENTS FOR FINAL DESIGN INFORMATION ON THIS PROJECT. THE DEPARTMENT DOES NOT WARRANT OR GUARANTEE THE SUFFICIENCY OR ACCURACY OF THE INVESTIGATION MADE, NOR THE INTERPRETATIONS MADE, OR OPINION OF THE DEPARTMENT AS TO THE TYPE OF MATERIALS AND CONDITIONS TO BE ENCOUNTERED. THE BIDDER OR CONTRACTOR IS CAUTIONED TO MAKE SUCH INDEPENDENT SUBSURFACE INVESTIGATIONS AS HE DEEMS NECESSARY TO SATISFY HIMSELF AS TO CONDITIONS TO BE ENCOUNTERED ON THIS PROJECT. THE CONTRACTOR SHALL HAVE NO CLAIM FOR ADDITIONAL COMPENSATION OR FOR AN EXTENSION OF TIME FOR ANY REASON RESULTING FROM THE ACTUAL CONDITIONS ENCOUNTERED AT THE SITE DIFFERING FROM THOSE INDICATED IN THE SUBSURFACE INFORMATION.

PERSONNEL

T.C. BOTTOMS

J.R. SWARTLEY

R.E. SMITH

INVESTIGATED BY T.C. BOTTOMS

CHECKED BY D.N. ARGENBRIGHT

SUBMITTED BY D.N. ARGENBRIGHT

DATE JULY 2012

NORTH CAROLINA LICENSED SEAL 2240 GEOLOGIST TYLER C. BOTTOMS

7/11/12

DRAWN BY: C.P. TURNER

NOTE - THE INFORMATION CONTAINED HEREIN IS NOT IMPLIED OR GUARANTEED BY THE N. C. DEPARTMENT OF TRANSPORTATION AS BEING ACCURATE NOR IT IS CONSIDERED TO BE PART OF THE PLANS, SPECIFICATIONS, OR CONTRACT FOR THE PROJECT.

NOTE - BY HAVING REQUESTED THIS INFORMATION THE CONTRACTOR SPECIFICALLY WAIVES ANY CLAIMS FOR INCREASED COMPENSATION OR EXTENSION OF TIME BASED ON DIFFERENCES BETWEEN THE CONDITIONS INDICATED HEREIN AND THE ACTUAL CONDITIONS AT THE PROJECT SITE.

PROJECT REFERENCE NO.	SHEET NO.
SF-660193	2 OF 9

NORTH CAROLINA DEPARTMENT OF TRANSPORTATION

DIVISION OF HIGHWAYS

GEOTECHNICAL ENGINEERING UNIT

SUBSURFACE INVESTIGATION

SOIL AND ROCK LEGEND, TERMS, SYMBOLS, AND ABBREVIATIONS

SOIL DESCRIPTION

SOIL IS CONSIDERED TO BE THE UNCONSOLIDATED, SEMI-CONSOLIDATED, OR WEATHERED EARTH MATERIALS THAT CAN BE PENETRATED WITH A CONTINUOUS FLIGHT POWER AUGER, AND YIELD LESS THAN 100 BLOWS PER FOOT ACCORDING TO STANDARD PENETRATION TEST (AASHTO T206, ASTM D-1586). SOIL CLASSIFICATION IS BASED ON THE AASHTO SYSTEM. BASIC DESCRIPTIONS GENERALLY SHALL INCLUDE: CONSISTENCY, COLOR, TEXTURE, MOISTURE, AASHTO CLASSIFICATION, AND OTHER PERTINENT FACTORS SUCH AS MINERALOGICAL COMPOSITION, ANGULARITY, STRUCTURE, PLASTICITY, ETC. EXAMPLE:

VERY STIFF, GRAY, SILTY CLAY, MOIST WITH INTERBEDDED FINE SAND LAYERS, HIGHLY PLASTIC, A-7-6

SOIL LEGEND AND AASHTO CLASSIFICATION

GENERAL CLASS.	GRANULAR MATERIALS (≤ 35% PASSING #200)							SILT-CLAY MATERIALS (> 35% PASSING #200)				ORGANIC MATERIALS		
GROUP CLASS.	A-1		A-3	A-2				A-4	A-5	A-6	A-7	A-1, A-2 A-3	A-4, A-5 A-6, A-7	
	A-1-a	A-1-b		A-2-4	A-2-5	A-2-6	A-2-7				A-7-5 A-7-6			
SYMBOL														
% PASSING # 10	50 MX											GRANULAR SOILS	SILT-CLAY SOILS	MUCK, PEAT
# 40	30 MX	50 MX	51 MN											
# 200	15 MX	25 MX	10 MX	35 MX	35 MX	35 MX	35 MX	36 MN	36 MN	36 MN	36 MN			
LIQUID LIMIT	6 MX		NP	40 MX	41 MN	40 MX	41 MN	40 MX	41 MN	40 MX	41 MN	SOILS WITH LITTLE OR MODERATE AMOUNTS OF ORGANIC MATTER		HIGHLY ORGANIC SOILS
PLASTIC INDEX				10 MX	10 MX	11 MN	11 MN	10 MX	10 MX	11 MN	11 MN			
GROUP INDEX	0		0	0		4 MX		8 MX	12 MX	16 MX	No MX			
USUAL TYPES OF MAJOR MATERIALS	STONE FRAGS. GRAVEL, AND SAND		FINE SAND	SILTY OR CLAYEY GRAVEL AND SAND				SILTY SOILS		CLAYEY SOILS				UNSUITABLE
GEN. RATING AS A SUBGRADE	EXCELLENT TO GOOD							FAIR TO POOR				FAIR TO POOR	POOR	

PI OF A-7-5 SUBGROUP IS ≤ LL - 30 ; PI OF A-7-6 SUBGROUP IS > LL - 30

CONSISTENCY OR DENSENESS

PRIMARY SOIL TYPE	COMPACTNESS OR CONSISTENCY	RANGE OF STANDARD PENETRATION RESISTENCE (N-VALUE)	RANGE OF UNCONFINED COMPRESSIVE STRENGTH (TONS/FT²)
GENERALLY GRANULAR MATERIAL (NON-COHESIVE)	VERY LOOSE LOOSE MEDIUM DENSE DENSE VERY DENSE	<4 4 TO 10 10 TO 30 30 TO 50 >50	N/A
GENERALLY SILT-CLAY MATERIAL (COHESIVE)	VERY SOFT SOFT MEDIUM STIFF STIFF VERY STIFF HARD	<2 2 TO 4 4 TO 8 8 TO 15 15 TO 30 >30	<0.25 0.25 TO 0.50 0.5 TO 1.0 1 TO 2 2 TO 4 >4

TEXTURE OR GRAIN SIZE

U.S. STD. SIEVE SIZE	4	10	40	60	200	270
OPENING (MM)	4.76	2.00	0.42	0.25	0.075	0.053

BOULDER (BLDR.)	COBBLE (COB.)	GRAVEL (GR.)	COARSE SAND (CSE. SD.)	FINE SAND (F SD.)	SILT (SL.)	CLAY (CL.)

GRAIN SIZE MM: 305 | 75 | 2.0 | 0.25 | 0.05 | 0.005

GRAIN SIZE IN.: 12 | 3

SOIL MOISTURE - CORRELATION OF TERMS

SOIL MOISTURE SCALE (ATTERBERG LIMITS)	FIELD MOISTURE DESCRIPTION	GUIDE FOR FIELD MOISTURE DESCRIPTION
	- SATURATED - (SAT.)	USUALLY LIQUID; VERY WET, USUALLY FROM BELOW THE GROUND WATER TABLE
LL — LIQUID LIMIT		
PLASTIC RANGE (PI)	- WET - (W)	SEMISOLID; REQUIRES DRYING TO ATTAIN OPTIMUM MOISTURE
PL — PLASTIC LIMIT		
OM — OPTIMUM MOISTURE	- MOIST - (M)	SOLID; AT OR NEAR OPTIMUM MOISTURE
SL — SHRINKAGE LIMIT		
	- DRY - (D)	REQUIRES ADDITIONAL WATER TO ATTAIN OPTIMUM MOISTURE

PLASTICITY

	PLASTICITY INDEX (PI)	DRY STRENGTH
NONPLASTIC	0-5	VERY LOW
LOW PLASTICITY	6-15	SLIGHT
MED. PLASTICITY	16-25	MEDIUM
HIGH PLASTICITY	26 OR MORE	HIGH

COLOR

DESCRIPTIONS MAY INCLUDE COLOR OR COLOR COMBINATIONS (TAN, RED, YELLOW-BROWN, BLUE-GRAY). MODIFIERS SUCH AS LIGHT, DARK, STREAKED, ETC. ARE USED TO DESCRIBE APPEARANCE.

GRADATION

WELL GRADED - INDICATES A GOOD REPRESENTATION OF PARTICLE SIZES FROM FINE TO COARSE.
UNIFORM - INDICATES THAT SOIL PARTICLES ARE ALL APPROXIMATELY THE SAME SIZE. (ALSO POORLY GRADED)
GAP-GRADED - INDICATES A MIXTURE OF UNIFORM PARTICLES OF TWO OR MORE SIZES.

ANGULARITY OF GRAINS

THE ANGULARITY OR ROUNDNESS OF SOIL GRAINS IS DESIGNATED BY THE TERMS: ANGULAR, SUBANGULAR, SUBROUNDED, OR ROUNDED.

MINERALOGICAL COMPOSITION

MINERAL NAMES SUCH AS QUARTZ, FELDSPAR, MICA, TALC, KAOLIN, ETC. ARE USED IN DESCRIPTIONS WHENEVER THEY ARE CONSIDERED OF SIGNIFICANCE.

COMPRESSIBILITY

SLIGHTLY COMPRESSIBLE	LIQUID LIMIT LESS THAN 31
MODERATELY COMPRESSIBLE	LIQUID LIMIT EQUAL TO 31-50
HIGHLY COMPRESSIBLE	LIQUID LIMIT GREATER THAN 50

PERCENTAGE OF MATERIAL

ORGANIC MATERIAL	GRANULAR SOILS	SILT - CLAY SOILS
TRACE OF ORGANIC MATTER	2 - 3%	3 - 5%
LITTLE ORGANIC MATTER	3 - 5%	5 - 12%
MODERATELY ORGANIC	5 - 10%	12 - 20%
HIGHLY ORGANIC	>10%	>20%

OTHER MATERIAL	
TRACE	1 - 10%
LITTLE	10 - 20%
SOME	20 - 35%
HIGHLY	35% AND ABOVE

GROUND WATER

- WATER LEVEL IN BORE HOLE IMMEDIATELY AFTER DRILLING
- STATIC WATER LEVEL AFTER 24 HOURS
- PW PERCHED WATER, SATURATED ZONE, OR WATER BEARING STRATA
- SPRING OR SEEP

MISCELLANEOUS SYMBOLS

- ROADWAY EMBANKMENT (RE) WITH SOIL DESCRIPTION
- SOIL SYMBOL
- ARTIFICIAL FILL (AF) OTHER THAN ROADWAY EMBANKMENT
- INFERRED SOIL BOUNDARY
- INFERRED ROCK LINE
- ALLUVIAL SOIL BOUNDARY
- 25/025 DIP & DIP DIRECTION OF ROCK STRUCTURES
- SPT DPT DMT VST PMT TEST BORING
- AUGER BORING
- CORE BORING
- MW MONITORING WELL
- PIEZOMETER INSTALLATION
- SLOPE INDICATOR INSTALLATION
- CONE PENETROMETER TEST
- SOUNDING ROD
- TEST BORING W/ CORE
- SPT N-VALUE
- REF SPT REFUSAL

ABBREVIATIONS

AR - AUGER REFUSAL
BT - BORING TERMINATED
CL. - CLAY
CPT - CONE PENETRATION TEST
CSE. - COARSE
DMT - DILATOMETER TEST
DPT - DYNAMIC PENETRATION TEST
e - VOID RATIO
F - FINE
FOSS. - FOSSILIFEROUS
FRAC. - FRACTURED, FRACTURES
FRAGS. - FRAGMENTS
HI. - HIGHLY
MED. - MEDIUM
MICA. - MICACEOUS
MOD. - MODERATELY
NP - NON PLASTIC
ORG. - ORGANIC
PMT - PRESSUREMETER TEST
SAP. - SAPROLITIC
SD. - SAND, SANDY
SL. - SILT, SILTY
SLI. - SLIGHTLY
TCR - TRICONE REFUSAL
w - MOISTURE CONTENT
V - VERY
VST - VANE SHEAR TEST
WEA. - WEATHERED
γ - UNIT WEIGHT
γ_d - DRY UNIT WEIGHT

SAMPLE ABBREVIATIONS

S - BULK
SS - SPLIT SPOON
ST - SHELBY TUBE
RS - ROCK
RT - RECOMPACTED TRIAXIAL
CBR - CALIFORNIA BEARING RATIO

EQUIPMENT USED ON SUBJECT PROJECT

DRILL UNITS:
- ☐ MOBILE B-___
- ☐ BK-51
- ☐ CME-45C
- ☐ CME-550
- ☐ PORTABLE HOIST
- ☐ _____
- ☐ _____

ADVANCING TOOLS:
- ☐ CLAY BITS
- ☐ 6" CONTINUOUS FLIGHT AUGER
- ☐ 8" HOLLOW AUGERS
- ☐ HARD FACED FINGER BITS
- ☐ TUNG.-CARBIDE INSERTS
- ☐ CASING ☐ W/ ADVANCER
- ☐ TRICONE ____" STEEL TEETH
- ☐ TRICONE ____" TUNG.-CARB.
- ☐ CORE BIT
- ☐ _____

HAMMER TYPE:
- ☐ AUTOMATIC ☐ MANUAL

CORE SIZE:
- ☐ -B_____
- ☐ -N_____
- ☐ -H_____

HAND TOOLS:
- ☐ POST HOLE DIGGER
- ☐ HAND AUGER
- ☐ SOUNDING ROD
- ☐ VANE SHEAR TEST
- ☐ _____

ROCK DESCRIPTION

HARD ROCK IS NON-COASTAL PLAIN MATERIAL THAT IF TESTED, WOULD YIELD SPT REFUSAL. AN INFERRED ROCK LINE INDICATES THE LEVEL AT WHICH NON-COASTAL PLAIN MATERIAL WOULD YIELD SPT REFUSAL. SPT REFUSAL IS PENETRATION BY A SPLIT SPOON SAMPLER EQUAL TO OR LESS THAN 0.1 FOOT PER 60 BLOWS. IN NON-COASTAL PLAIN MATERIAL, THE TRANSITION BETWEEN SOIL AND ROCK IS OFTEN REPRESENTED BY A ZONE OF WEATHERED ROCK.
ROCK MATERIALS ARE TYPICALLY DIVIDED AS FOLLOWS:

WEATHERED ROCK (WR)	NON-COASTAL PLAIN MATERIAL THAT WOULD YIELD SPT N VALUES > 100 BLOWS PER FOOT IF TESTED.
CRYSTALLINE ROCK (CR)	FINE TO COARSE GRAIN IGNEOUS AND METAMORPHIC ROCK THAT WOULD YIELD SPT REFUSAL IF TESTED. ROCK TYPE INCLUDES GRANITE, GNEISS, GABBRO, SCHIST, ETC.
NON-CRYSTALLINE ROCK (NCR)	FINE TO COARSE GRAIN METAMORPHIC AND NON-COASTAL PLAIN SEDIMENTARY ROCK THAT WOULD YEILD SPT REFUSAL IF TESTED. ROCK TYPE INCLUDES PHYLLITE, SLATE, SANDSTONE, ETC.
COASTAL PLAIN SEDIMENTARY ROCK (CP)	COASTAL PLAIN SEDIMENTS CEMENTED INTO ROCK, BUT MAY NOT YIELD SPT REFUSAL. ROCK TYPE INCLUDES LIMESTONE, SANDSTONE, CEMENTED SHELL BEDS, ETC.

WEATHERING

FRESH	ROCK FRESH, CRYSTALS BRIGHT, FEW JOINTS MAY SHOW SLIGHT STAINING. ROCK RINGS UNDER HAMMER IF CRYSTALLINE.
VERY SLIGHT (V SLI.)	ROCK GENERALLY FRESH, JOINTS STAINED, SOME JOINTS MAY SHOW THIN CLAY COATINGS IF OPEN, CRYSTALS ON A BROKEN SPECIMEN FACE SHINE BRIGHTLY. ROCK RINGS UNDER HAMMER BLOWS IF OF A CRYSTALLINE NATURE.
SLIGHT (SLI.)	ROCK GENERALLY FRESH, JOINTS STAINED AND DISCOLORATION EXTENDS INTO ROCK UP TO 1 INCH. OPEN JOINTS MAY CONTAIN CLAY. IN GRANITOID ROCKS SOME OCCASIONAL FELDSPAR CRYSTALS ARE DULL AND DISCOLORED. CRYSTALLINE ROCKS RING UNDER HAMMER BLOWS.
MODERATE (MOD.)	SIGNIFICANT PORTIONS OF ROCK SHOW DISCOLORATION AND WEATHERING EFFECTS. IN GRANITOID ROCKS, MOST FELDSPARS ARE DULL AND DISCOLORED, SOME SHOW CLAY. ROCK HAS DULL SOUND UNDER HAMMER BLOWS AND SHOWS SIGNIFICANT LOSS OF STRENGTH AS COMPARED WITH FRESH ROCK.
MODERATELY SEVERE (MOD. SEV.)	ALL ROCK EXCEPT QUARTZ DISCOLORED OR STAINED. IN GRANITOID ROCKS, ALL FELDSPARS DULL AND DISCOLORED AND A MAJORITY SHOW KAOLINIZATION. ROCK SHOWS SEVERE LOSS OF STRENGTH AND CAN BE EXCAVATED WITH A GEOLOGIST'S PICK. ROCK GIVES "CLUNK" SOUND WHEN STRUCK. *IF TESTED, WOULD YIELD SPT REFUSAL*
SEVERE (SEV.)	ALL ROCK EXCEPT QUARTZ DISCOLORED OR STAINED. ROCK FABRIC CLEAR AND EVIDENT BUT REDUCED IN STRENGTH TO STRONG SOIL. IN GRANITOID ROCKS ALL FELDSPARS ARE KAOLINIZED TO SOME EXTENT. SOME FRAGMENTS OF STRONG ROCK USUALLY REMAIN. *IF TESTED, YIELDS SPT N VALUES > 100 BPF*
VERY SEVERE (V SEV.)	ALL ROCK EXCEPT QUARTZ DISCOLORED OR STAINED. ROCK FABRIC ELEMENTS ARE DISCERNIBLE BUT THE MASS IS EFFECTIVELY REDUCED TO SOIL STATUS, WITH ONLY FRAGMENTS OF STRONG ROCK REMAINING. SAPROLITE IS AN EXAMPLE OF ROCK WEATHERED TO A DEGREE SUCH THAT ONLY MINOR VESTIGES OF THE ORIGINAL ROCK FABRIC REMAIN. *IF TESTED, YIELDS SPT N VALUES < 100 BPF*
COMPLETE	ROCK REDUCED TO SOIL. ROCK FABRIC NOT DISCERNIBLE, OR DISCERNIBLE ONLY IN SMALL AND SCATTERED CONCENTRATIONS. QUARTZ MAY BE PRESENT AS DIKES OR STRINGERS. SAPROLITE IS ALSO AN EXAMPLE.

ROCK HARDNESS

VERY HARD	CANNOT BE SCRATCHED BY KNIFE OR SHARP PICK. BREAKING OF HAND SPECIMENS REQUIRES SEVERAL HARD BLOWS OF THE GEOLOGIST'S PICK.
HARD	CAN BE SCRATCHED BY KNIFE OR PICK ONLY WITH DIFFICULTY. HARD HAMMER BLOWS REQUIRED TO DETACH HAND SPECIMEN.
MODERATELY HARD	CAN BE SCRATCHED BY KNIFE OR PICK. GOUGES OR GROOVES TO 0.25 INCHES DEEP CAN BE EXCAVATED BY HARD BLOW OF A GEOLOGIST'S PICK. HAND SPECIMENS CAN BE DETACHED BY MODERATE BLOWS.
MEDIUM HARD	CAN BE GROOVED OR GOUGED 0.05 INCHES DEEP BY FIRM PRESSURE OF KNIFE OR PICK POINT. CAN BE EXCAVATED IN SMALL CHIPS TO PEICES 1 INCH MAXIMUM SIZE BY HARD BLOWS OF THE POINT OF A GEOLOGIST'S PICK.
SOFT	CAN BE GROVED OR GOUGED READILY BY KNIFE OR PICK. CAN BE EXCAVATED IN FRAGMENTS FROM CHIPS TO SEVERAL INCHES IN SIZE BY MODERATE BLOWS OF A PICK POINT. SMALL, THIN PIECES CAN BE BROKEN BY FINGER PRESSURE.
VERY SOFT	CAN BE CARVED WITH KNIFE. CAN BE EXCAVATED READILY WITH POINT OF PICK. PIECES 1 INCH OR MORE IN THICKNESS CAN BE BROKEN BY FINGER PRESSURE. CAN BE SCRATCHED READILY BY FINGERNAIL.

FRACTURE SPACING

TERM	SPACING
VERY WIDE	MORE THAN 10 FEET
WIDE	3 TO 10 FEET
MODERATELY CLOSE	1 TO 3 FEET
CLOSE	0.16 TO 1 FEET
VERY CLOSE	LESS THAN 0.16 FEET

BEDDING

TERM	THICKNESS
VERY THICKLY BEDDED	> 4 FEET
THICKLY BEDDED	1.5 - 4 FEET
THINLY BEDDED	0.16 - 1.5 FEET
VERY THINLY BEDDED	0.03 - 0.16 FEET
THICKLY LAMINATED	0.008 - 0.03 FEET
THINLY LAMINATED	< 0.008 FEET

INDURATION

FOR SEDIMENTARY ROCKS, INDURATION IS THE HARDENING OF THE MATERIAL BY CEMENTING, HEAT, PRESSURE, ETC.

FRIABLE	RUBBING WITH FINGER FREES NUMEROUS GRAINS; GENTLE BLOW BY HAMMER DISINTEGRATES SAMPLE.
MODERATELY INDURATED	GRAINS CAN BE SEPARATED FROM SAMPLE WITH STEEL PROBE; BREAKS EASILY WHEN HIT WITH HAMMER.
INDURATED	GRAINS ARE DIFFICULT TO SEPARATE WITH STEEL PROBE; DIFFICULT TO BREAK WITH HAMMER.
EXTREMELY INDURATED	SHARP HAMMER BLOWS REQUIRED TO BREAK SAMPLE; SAMPLE BREAKS ACROSS GRAINS.

TERMS AND DEFINITIONS

ALLUVIUM (ALLUV.) - SOILS THAT HAVE BEEN TRANSPORTED BY WATER.

AQUIFER - A WATER BEARING FORMATION OR STRATA.

ARENACEOUS - APPLIED TO ROCKS THAT HAVE BEEN DERIVED FROM SAND OR THAT CONTAIN SAND.

ARGILLACEOUS - APPLIED TO ALL ROCKS OR SUBSTANCES COMPOSED OF CLAY MINERALS, OR HAVING A NOTABLE PROPORTION OF CLAY IN THEIR COMPOSITION, AS SHALE, SLATE, ETC.

ARTESIAN - GROUND WATER THAT IS UNDER SUFFICIENT PRESSURE TO RISE ABOVE THE LEVEL AT WHICH IT IS ENCOUNTERED, BUT WHICH DOES NOT NECESSARILY RISE TO OR ABOVE THE GROUND SURFACE.

CALCAREOUS (CALC.) - SOILS THAT CONTAIN APPRECIABLE AMOUNTS OF CALCIUM CARBONATE.

COLLUVIUM - ROCK FRAGMENTS MIXED WITH SOIL DEPOSITED BY GRAVITY ON SLOPE OR AT BOTTOM OF SLOPE.

CORE RECOVERY (REC.) - TOTAL LENGTH OF ALL MATERIAL RECOVERED IN THE CORE BARREL DIVIDED BY TOTAL LENGTH OF CORE RUN AND EXPRESSED AS A PERCENTAGE.

DIKE - A TABULAR BODY OF IGNEOUS ROCK THAT CUTS ACROSS THE STRUCTURE OF ADJACENT ROCKS OR CUTS MASSIVE ROCK.

DIP - THE ANGLE AT WHICH A STRATUM OR ANY PLANAR FEATURE IS INCLINED FROM THE HORIZONTAL.

DIP DIRECTION (DIP AZIMUTH) - THE DIRECTION OR BEARING OF THE HORIZONTAL TRACE OF THE LINE OF DIP, MEASURED CLOCKWISE FROM NORTH.

FAULT - A FRACTURE OR FRACTURE ZONE ALONG WHICH THERE HAS BEEN DISPLACEMENT OF THE SIDES RELATIVE TO ONE ANOTHER PARALLEL TO THE FRACTURE.

FISSILE - A PROPERTY OF SPLITTING ALONG CLOSELY SPACED PARALLEL PLANES.

FLOAT - ROCK FRAGMENTS ON SURFACE NEAR THEIR ORIGINAL POSITION AND DISLODGED FROM PARENT MATERIAL.

FLOOD PLAIN (FP) - LAND BORDERING A STREAM, BUILT OF SEDIMENTS DEPOSITED BY THE STREAM.

FORMATION (FM.) - A MAPPABLE GEOLOGIC UNIT THAT CAN BE RECOGNIZED AND TRACED IN THE FIELD.

JOINT - FRACTURE IN ROCK ALONG WHICH NO APPRECIABLE MOVEMENT HAS OCCURRED.

LEDGE - A SHELF-LIKE RIDGE OR PROJECTION OF ROCK WHOSE THICKNESS IS SMALL COMPARED TO ITS LATERAL EXTENT.

LENS - A BODY OF SOIL OR ROCK THAT THINS OUT IN ONE OR MORE DIRECTIONS.

MOTTLED (MOT.) - IRREGULARLY MARKED WITH SPOTS OF DIFFERENT COLORS. MOTTLING IN SOILS USUALLY INDICATES POOR AERATION AND LACK OF GOOD DRAINAGE.

PERCHED WATER - WATER MAINTAINED ABOVE THE NORMAL GROUND WATER LEVEL BY THE PRESENCE OF AN INTERVENING IMPERVIOUS STRATUM.

RESIDUAL (RES.) SOIL - SOIL FORMED IN PLACE BY THE WEATHERING OF ROCK.

ROCK QUALITY DESIGNATION (RQD) - A MEASURE OF ROCK QUALITY DESCRIBED BY TOTAL LENGTH OF ROCK SEGMENTS EQUAL TO OR GREATER THAN 4 INCHES DIVIDED BY THE TOTAL LENGTH OF CORE RUN AND EXPRESSED AS A PERCENTAGE.

SAPROLITE (SAP.) - RESIDUAL SOIL THAT RETAINS THE RELIC STRUCTURE OR FABRIC OF THE PARENT ROCK.

SILL - AN INTRUSIVE BODY OF IGNEOUS ROCK OF APPROXIMATELY UNIFORM THICKNESS AND RELATIVELY THIN COMPARED WITH ITS LATERAL EXTENT, THAT HAS BEEN EMPLACED PARALLEL TO THE BEDDING OR SCHISTOSITY OF THE INTRUDED ROCKS.

SLICKENSIDE - POLISHED AND STRIATED SURFACE THAT RESULTS FROM FRICTION ALONG A FAULT OR SLIP PLANE.

STANDARD PENETRATION TEST (PENETRATION RESISTANCE) (SPT) - NUMBER OF BLOWS IN OR BPF) OF A 140 LB. HAMMER FALLING 30 INCHES REQUIRED TO PRODUCE A PENETRATION OF 1 FOOT INTO SOIL WITH A 2 INCH OUTSIDE DIAMETER SPLIT SPOON SAMPLER. SPT REFUSAL IS PENETRATION EQUAL TO OR LESS THAN 0.1 FOOT PER 60 BLOWS.

STRATA CORE RECOVERY (SREC.) - TOTAL LENGTH OF STRATA MATERIAL RECOVERED DIVIDED BY TOTAL LENGTH OF STRATUM AND EXPRESSED AS A PERCENTAGE.

STRATA ROCK QUALITY DESIGNATION (SRQD) - A MEASURE OF ROCK QUALITY DESCRIBED BY TOTAL LENGTH OF ROCK SEGMENTS WITHIN A STRATUM EQUAL TO OR GREATER THAN 4 INCHES DIVIDED BY THE TOTAL LENGTH OF STRATA AND EXPRESSED AS A PERCENTAGE.

TOPSOIL (TS.) - SURFACE SOILS USUALLY CONTAINING ORGANIC MATTER.

BENCH MARK: BM-1: RAILROAD SPIKE IN 20" OAK AT -L- STA. 17+27.57, 102' LT

ELEVATION: 36.60 FT.

NOTES:

PROJECT REFERENCE NO.	SHEET
SF-660193	3 OF 9

SITE PLAN

0 30 60
FEET

SKEW = 96°

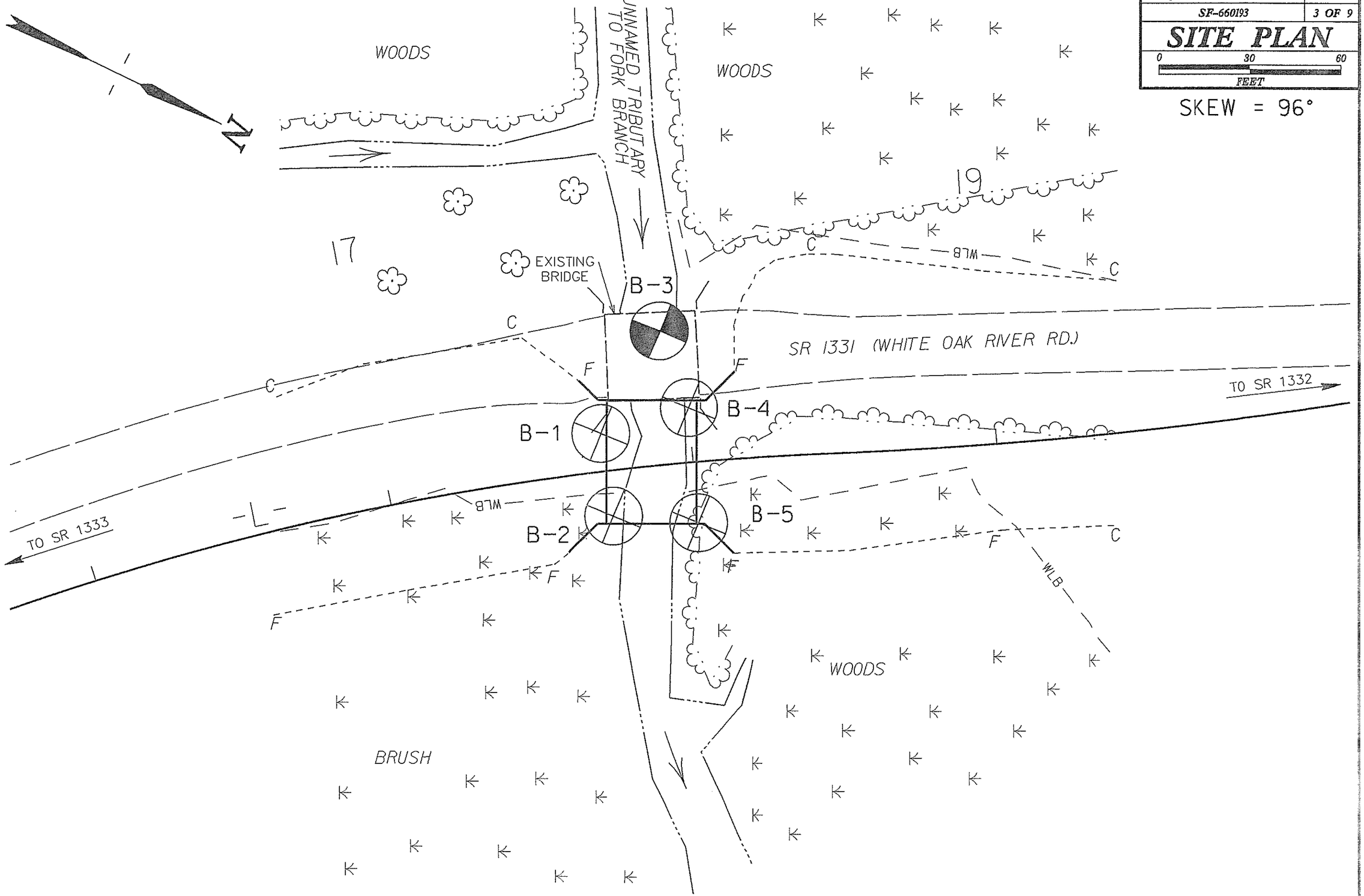

PROJECT REFERENCE NO.	SHEET NO.
SF-660193	4 OF 9
ROADWAY DESIGN ENGINEER	HYDRAULICS ENGINEER

INCOMPLETE PLANS
DO NOT USE FOR R/W ACQUISITION
PRELIMINARY PLANS
DO NOT USE FOR CONSTRUCTION

PROFILE THROUGH BORINGS PROJECTED ALONG -L-

VE = 2.0

Ⓐ SOFT BROWN SILT WITH LITTLE ORGANIC MATERIAL, MOIST TO WET (ALLUVIAL)
Ⓑ MEDIUM DENSE BROWN SAND, SATURATED (ALLUVIAL)

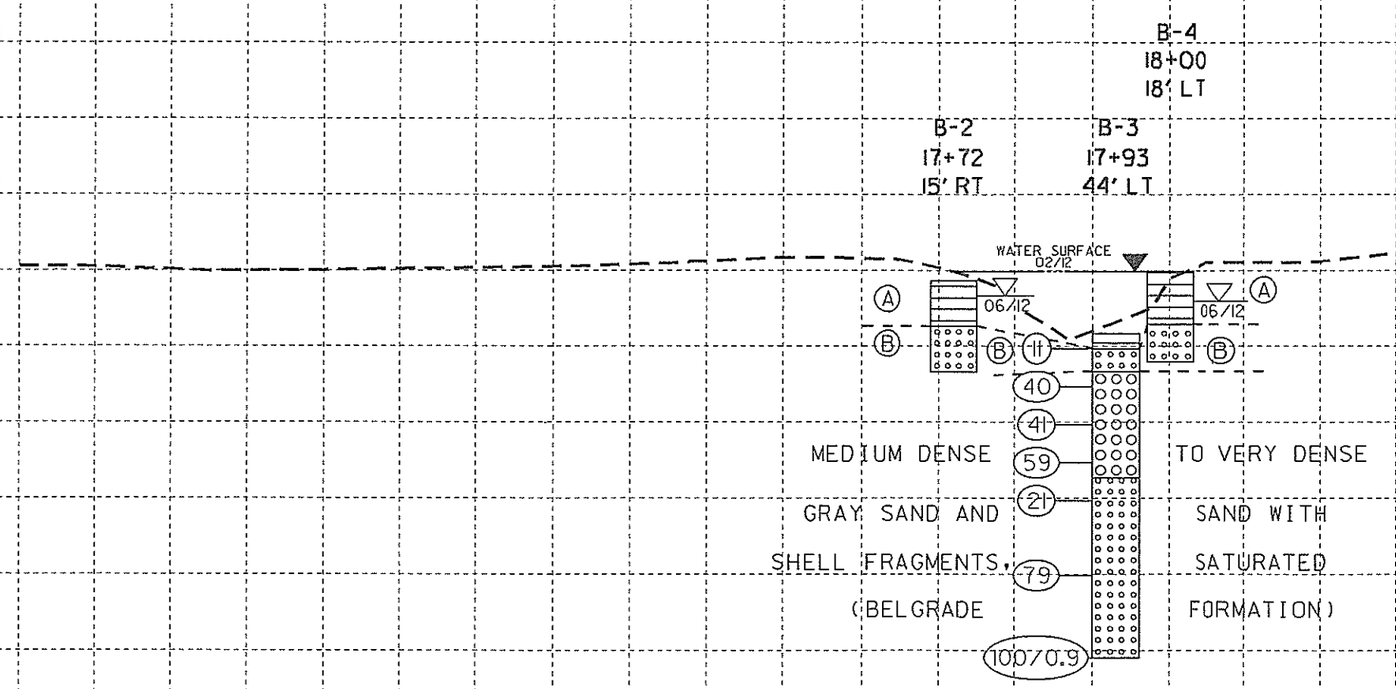

NOTE: GROUNDLINE PROFILE ALONG -L- TAKEN FROM CULVERT SURVEY AND HYDRAULIC DESIGN REPORT PROVIDED.

NOTE: INFERRED STRATIGRAPHY IS DRAWN THROUGH THE BORINGS WITH BOTH PROJECTED ONTO PROFILE.

16+50 17+00 17+50 18+00 18+50 19+00

80 75 70 65 60 55 50 45 40 35 30 25 20 15 10 5 0 -5 -10 -15 -20

5/14/99
11-JUL-2012 11:07
L:\ERO\Greenville Investigation\TIP\SF660193_GEO_CULVERT0193_ONSLOW\CADD_GEOTECH\Site&Sub\660193_GEO_CULVERT_GTM.dgn
Bentley - BT (PE,25,4A)

NCDOT GEOTECHNICAL ENGINEERING UNIT
BORELOG REPORT

WBS 17BP.3.R.14	TIP SF-660193	COUNTY ONSLOW	GEOLOGIST Bottoms, T. C.
SITE DESCRIPTION BRIDGE NO. 193 ON -L- (SR 1331) OVER UNNAMED TRIBUTARY TO FORK BRANCH			GROUND WTR (ft)
BORING NO. B-1	STATION 17+72	OFFSET 13 ft LT	ALIGNMENT -L-
COLLAR ELEV. 35.5 ft	TOTAL DEPTH 6.0 ft	NORTHING 429,349	EASTING 2,505,819
DRILL RIG/HAMMER EFF./DATE N/A		DRILL METHOD Hand Auger	HAMMER TYPE N/A
DRILLER N/A	START DATE 06/12/12	COMP. DATE 06/12/12	SURFACE WATER DEPTH N/A

GROUND WTR (ft): 0 HR. 2.0; 24 HR. N/A

ELEV (ft)	DRIVE ELEV (ft)	DEPTH (ft)	BLOW COUNT 0.5ft	0.5ft	0.5ft	BLOWS PER FOOT 0 25 50 75 100	SAMP. NO.	MOI	LOG	SOIL AND ROCK DESCRIPTION ELEV. (ft)	DEPTH (ft)
35.5										GROUND SURFACE	0.0
31.0										ALLUVIAL SOFT BROWN SILT WITH LITTLE ORGANIC MATERIAL, MOIST TO WET	4.5
29.5										ALLUVIAL MEDIUM DENSE BROWN SAND, SATURATED	6.0

Boring Terminated at Elevation 29.5 ft in Medium Dense Sand

WBS 17BP.3.R.14	TIP SF-660193	COUNTY ONSLOW	GEOLOGIST Bottoms, T. C.
SITE DESCRIPTION BRIDGE NO. 193 ON -L- (SR 1331) OVER UNNAMED TRIBUTARY TO FORK BRANCH			GROUND WTR (ft)
BORING NO. B-2	STATION 17+72	OFFSET 15 ft RT	ALIGNMENT -L-
COLLAR ELEV. 34.5 ft	TOTAL DEPTH 6.0 ft	NORTHING 429,366	EASTING 2,505,850
DRILL RIG/HAMMER EFF./DATE N/A		DRILL METHOD Hand Auger	HAMMER TYPE N/A
DRILLER N/A	START DATE 06/12/12	COMP. DATE 06/12/12	SURFACE WATER DEPTH N/A

GROUND WTR (ft): 0 HR. 1.0; 24 HR. N/A

ELEV (ft)	DRIVE ELEV (ft)	DEPTH (ft)	BLOW COUNT 0.5ft	0.5ft	0.5ft	BLOWS PER FOOT 0 25 50 75 100	SAMP. NO.	MOI	LOG	SOIL AND ROCK DESCRIPTION	
34.5										GROUND SURFACE	0.0
31.5										ALLUVIAL SOFT BROWN SILT WITH LITTLE ORGANIC MATERIAL, MOIST TO WET	3.0
28.5										ALLUVIAL MEDIUM DENSE BROWN SAND, SATURATED	6.0

Boring Terminated at Elevation 28.5 ft in Medium Dense Sand

NCDOT BORE DOUBLE 17BP.3.4.14_CULVERT.GPJ NC_DOT.GDT 7/11/12

NCDOT GEOTECHNICAL ENGINEERING UNIT
BORELOG REPORT

WBS 17BP.3.R.14	**TIP** SF-660193	**COUNTY** ONSLOW	**GEOLOGIST** Swartley, J. R.
SITE DESCRIPTION BRIDGE NO. 193 ON -L- (SR 1331) OVER UNNAMED TRIBUTARY TO FORK BRANCH			**GROUND WTR (ft)**
BORING NO. B-3	**STATION** 17+93	**OFFSET** 44 ft LT	**ALIGNMENT** -L- — 0 HR. N/A
COLLAR ELEV. 30.9 ft	**TOTAL DEPTH** 21.3 ft	**NORTHING** 429,356	**EASTING** 2,505,788 — 24 HR. N/A
DRILL RIG/HAMMER EFF./DATE GFO1042 CME-550 91% 05/23/2012		**DRILL METHOD** Mud Rotary	**HAMMER TYPE** Automatic
DRILLER Smith, R. E.	**START DATE** 06/28/12	**COMP. DATE** 06/28/12	**SURFACE WATER DEPTH** 2.2ft

ELEV (ft)	DRIVE ELEV (ft)	DEPTH (ft)	BLOW COUNT 0.5ft	0.5ft	0.5ft	BLOWS PER FOOT (0 25 50 75 100)	SAMP. NO.	MOI	LOG	SOIL AND ROCK DESCRIPTION — ELEV. (ft)	DEPTH (ft)
35											
										WATER SURFACE (06/28/12)	
	30.9	0.0								GROUND SURFACE	
30			WOH	2	9	11				30.9	0.0
										ALLUVIAL BROWN SILT WITH LITTLE ORGANIC MATERIAL, WET	
	28.4	2.5	5	20	20	40				29.9	1.0
										ALLUVIAL BROWN SAND, SATURATED	
25	25.9	5.0	19	24	17	41				28.4	2.5
										COASTAL PLAIN GRAY CALCAREOUS SAND AND SAND WITH SHELL FRAGMENTS, SATURATED (BELGRADE FORMATION)	
	23.4	7.5	24	29	30	59					
20	20.9	10.0	10	9	12	21				21.4	9.5
15	16.0	14.9	20	36	43	79					
10	11.0	19.9	28	50	50/0.4	100/0.9				9.6	21.3
										Boring Terminated at Elevation 9.6 ft in Very Dense Sand	

NCDOT BORE DOUBLE 17BP.3.4.14_CULVERT.GPJ NC_DOT.GDT 7/11/12

NCDOT GEOTECHNICAL ENGINEERING UNIT
BORELOG REPORT

WBS 17BP.3.R.14	TIP SF-660193	COUNTY ONSLOW	GEOLOGIST Bottoms, T. C.
SITE DESCRIPTION BRIDGE NO. 193 ON -L- (SR 1331) OVER UNNAMED TRIBUTARY TO FORK BRANCH			GROUND WTR (ft)
BORING NO. B-4	STATION 18+00	OFFSET 18 ft LT	ALIGNMENT -L-
COLLAR ELEV. 34.6 ft	TOTAL DEPTH 6.0 ft	NORTHING 429,375	EASTING 2,505,808
DRILL RIG/HAMMER EFF./DATE N/A		DRILL METHOD Hand Auger	HAMMER TYPE N/A
DRILLER N/A	START DATE 06/12/12	COMP. DATE 06/12/12	SURFACE WATER DEPTH N/A

GROUND WTR (ft): 0 HR. 2.0; 24 HR. N/A

ELEV (ft)	DRIVE ELEV (ft)	DEPTH (ft)	BLOW COUNT 0.5ft	0.5ft	0.5ft	BLOWS PER FOOT 0 25 50 75 100	SAMP. NO.	MOI	LOG	SOIL AND ROCK DESCRIPTION ELEV. (ft)	DEPTH (ft)
35										34.6 GROUND SURFACE	0.0
								▽		ALLUVIAL SOFT BROWN SILT WITH LITTLE ORGANIC MATERIAL, MOIST TO WET	
										31.1	3.5
30										ALLUVIAL MEDIUM DENSE BROWN SAND, SATURATED	
										28.6	6.0

Boring Terminated at Elevation 28.6 ft in Medium Dense Sand

WBS 17BP.3.R.14	TIP SF-660193	COUNTY ONSLOW	GEOLOGIST Bottoms, T. C.
SITE DESCRIPTION BRIDGE NO. 193 ON -L- (SR 1331) OVER UNNAMED TRIBUTARY TO FORK BRANCH			GROUND WTR (ft)
BORING NO. B-5	STATION 18+00	OFFSET 20 ft RT	ALIGNMENT -L-
COLLAR ELEV. 34.5 ft	TOTAL DEPTH 6.0 ft	NORTHING 429,392	EASTING 2,505,841
DRILL RIG/HAMMER EFF./DATE N/A		DRILL METHOD Hand Auger	HAMMER TYPE N/A
DRILLER N/A	START DATE 06/12/12	COMP. DATE 06/12/12	SURFACE WATER DEPTH N/A

GROUND WTR (ft): 0 HR. 1.5; 24 HR. N/A

ELEV (ft)	DRIVE ELEV (ft)	DEPTH (ft)	BLOW COUNT 0.5ft	0.5ft	0.5ft	BLOWS PER FOOT 0 25 50 75 100	SAMP. NO.	MOI	LOG	SOIL AND ROCK DESCRIPTION ELEV. (ft)	DEPTH (ft)
35										34.5 GROUND SURFACE	0.0
								▽		ALLUVIAL SOFT BROWN SILT WITH LITTLE ORGANIC MATERIAL, MOIST TO WET	
										31.0	3.5
30										ALLUVIAL MEDIUM DENSE BROWN SAND, SATURATED	
										28.5	6.0

Boring Terminated at Elevation 28.5 ft in Medium Dense Sand

HNTB NORTH CAROLINA, P.C.
343 E. Six Forks Road, Suite 200
Raleigh, North Carolina 27609
NC License No: C-1554

PROJECT REFERENCE NO.	SHEET NO.
17BP.3.R.14	04
R/W SHEET NO.	
ROADWAY DESIGN ENGINEER	HYDRAULICS ENGINEER

REVISIONS

PLAN

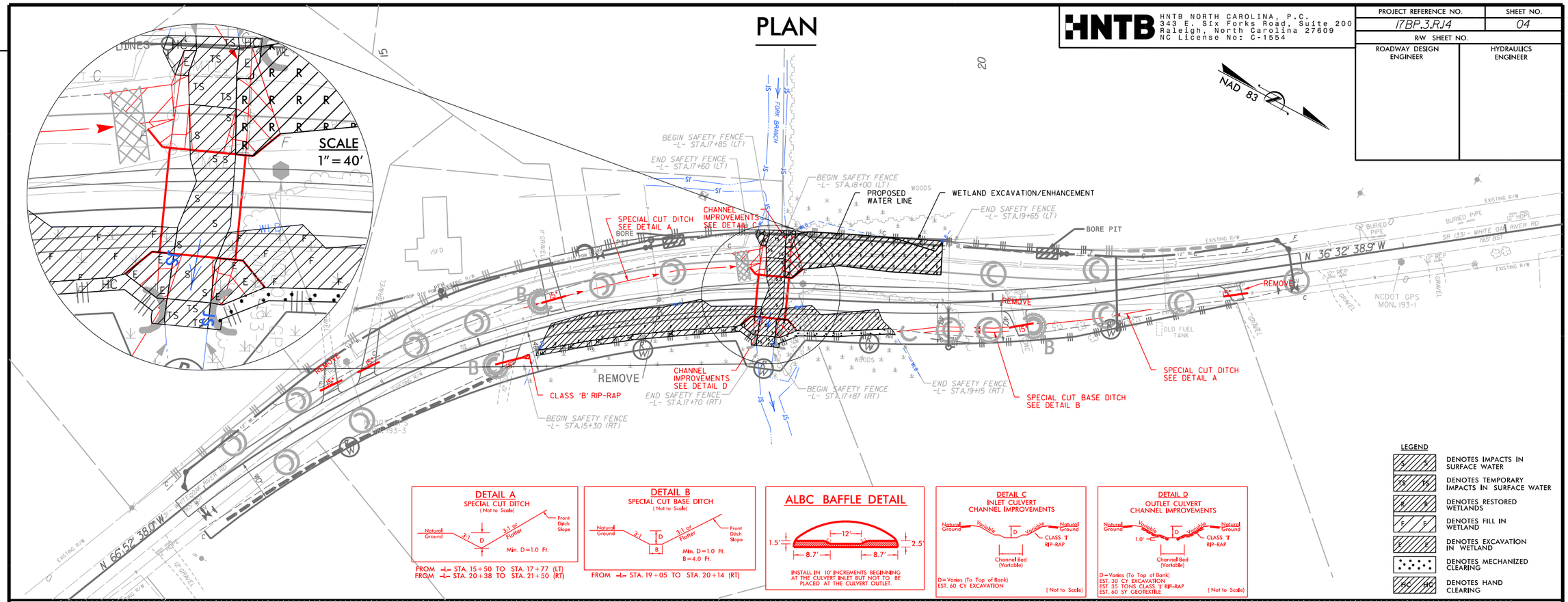

PROFILE

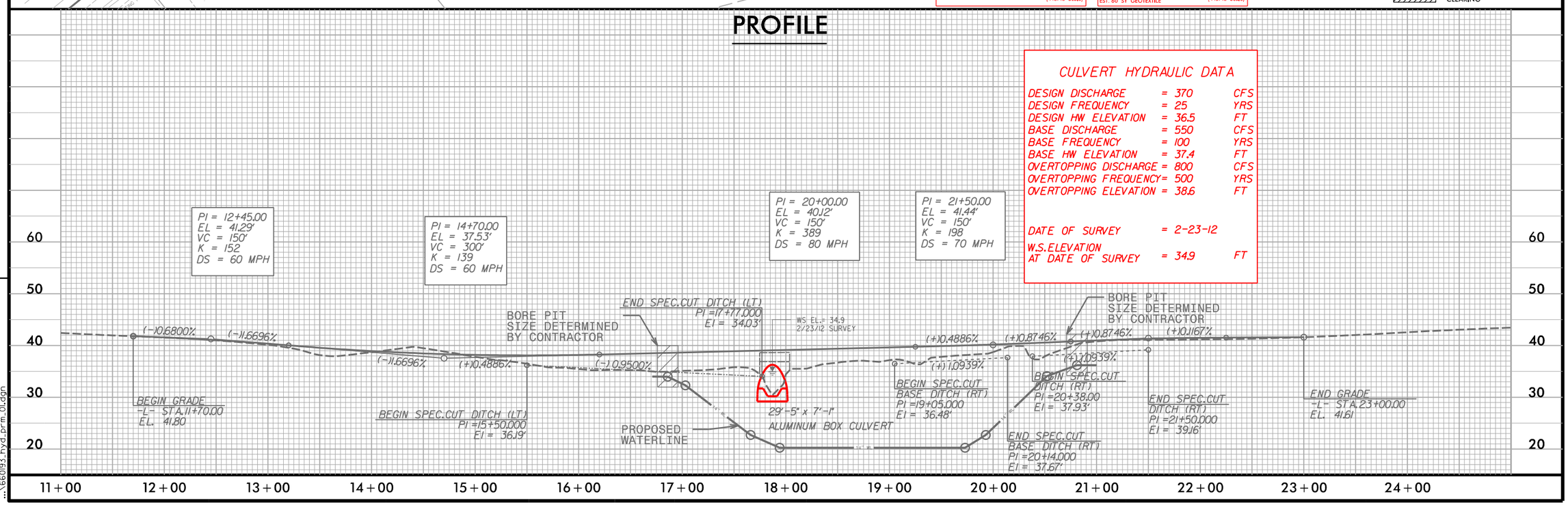

11/20/2013
4:10:06 PM
...\66093_hyd_prm_01.dgn

HNTB NORTH CAROLINA, P.C.
343 E. Six Forks Road, Suite 200
Raleigh, North Carolina 27609
NC License No: C-1554

PROJECT REFERENCE NO.	SHEET NO.
17BP.3.R.14	04
R/W SHEET NO.	
ROADWAY DESIGN ENGINEER	HYDRAULICS ENGINEER

REVISIONS

PLAN

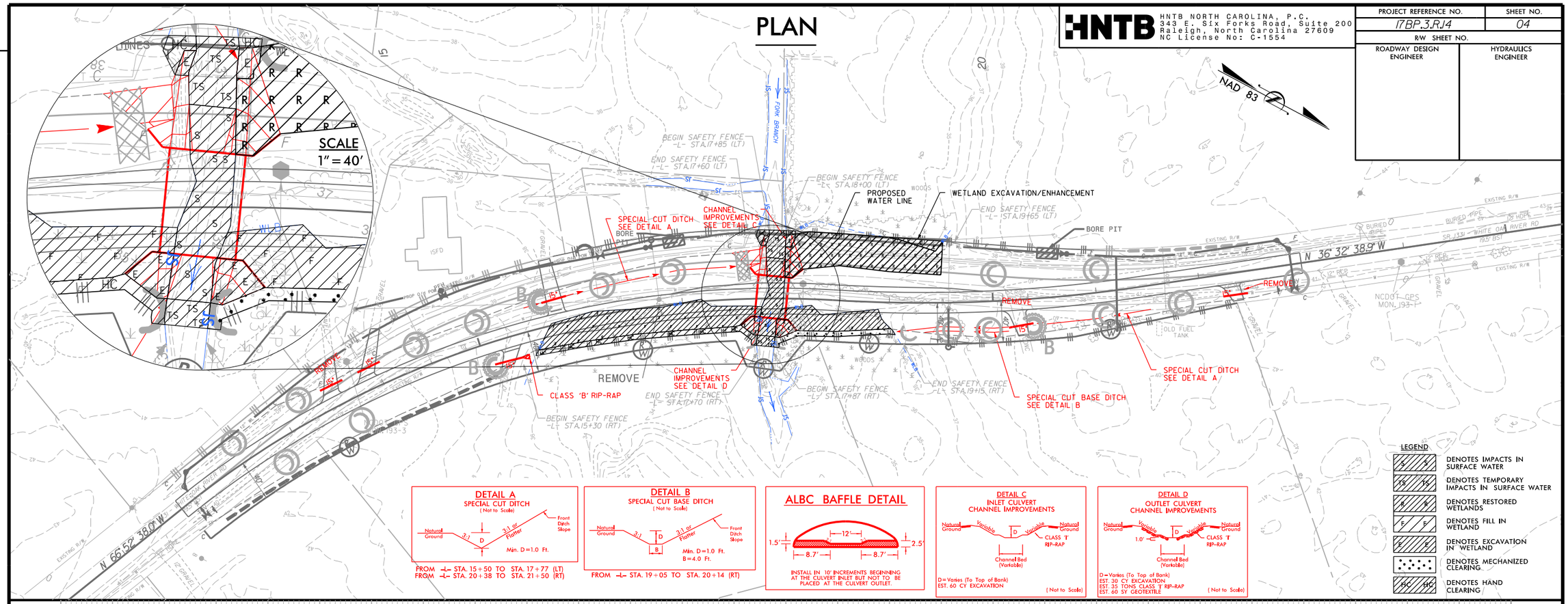

DETAIL A
SPECIAL CUT DITCH
(Not to Scale)

FROM -L- STA. 15+50 TO STA. 17+77 (LT)
FROM -L- STA. 20+38 TO STA. 21+50 (RT)

DETAIL B
SPECIAL CUT BASE DITCH
(Not to Scale)

FROM -L- STA. 19+05 TO STA. 20+14 (RT)

ALBC BAFFLE DETAIL

INSTALL IN 10' INCREMENTS BEGINNING AT THE CULVERT INLET BUT NOT TO BE PLACED AT THE CULVERT OUTLET.

DETAIL C
INLET CULVERT CHANNEL IMPROVEMENTS

D=Varies (To Top of Bank)
EST. 60 CY EXCAVATION
(Not to Scale)

DETAIL D
OUTLET CULVERT CHANNEL IMPROVEMENTS

D=Varies (To Top of Bank)
EST. 30 CY EXCAVATION
EST. 35 TONS CLASS 'I' RIP-RAP
EST. 60 SY GEOTEXTILE
(Not to Scale)

PROFILE

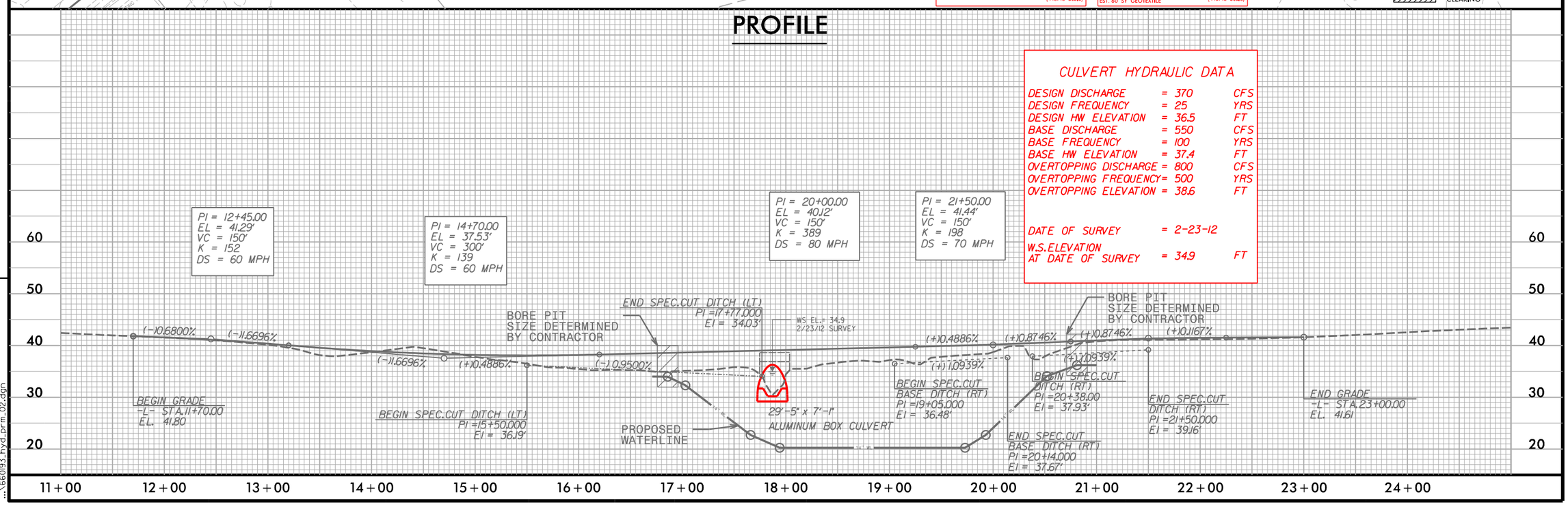

CULVERT HYDRAULIC DATA

DESIGN DISCHARGE	= 370	CFS
DESIGN FREQUENCY	= 25	YRS
DESIGN HW ELEVATION	= 36.5	FT
BASE DISCHARGE	= 550	CFS
BASE FREQUENCY	= 100	YRS
BASE HW ELEVATION	= 37.4	FT
OVERTOPPING DISCHARGE	= 800	CFS
OVERTOPPING FREQUENCY	= 500	YRS
OVERTOPPING ELEVATION	= 38.6	FT
DATE OF SURVEY	= 2-23-12	
W.S.ELEVATION AT DATE OF SURVEY	= 34.9	FT

11/20/2013
4:10:51 PM
...\66019B_hyd_prm_02.dgn