NOT TO SCALE

HINDE ENGINEERING
License No. C-2639
401 Harrison Oaks Blvd., Suite 145 Cary, NC 27513

DOCUMENT NOT CONSIDERED FINAL UNLESS ALL SIGNATURES COMPLETED

PROJECT REFERENCE NO.	SHEET NO.
W-5601A	UC-3A
DESIGNED BY: RBW	
DRAWN BY: RBW	
CHECKED BY: CLS	
APPROVED BY: RBW	
REVISED:	
NORTH CAROLINA DEPARTMENT OF TRANSPORTATION	
UTILITIES ENGINEERING SEC. PHONE:(919)707-6690 FAX:(919)250-4151	UTILITY CONSTRUCTION PLANS ONLY

NORTH CAROLINA PROFESSIONAL SEAL 10157 ENGINEER RONALD B. WILKINS
DocuSigned by: Ronald B. Wilkins
12/28/2017

UTILITY CONSTRUCTION

PROJECT TYPICAL DETAILS

TRENCH DETAIL

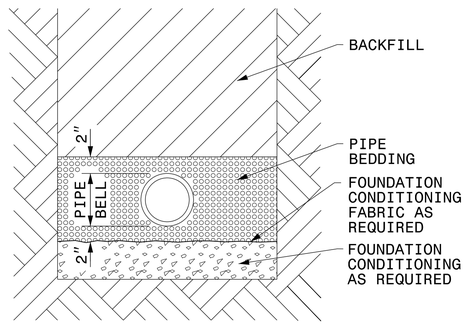

PLACE FOUNDATION CONDITIONING MATERIAL BELOW BEDDING IF REQUIRED, AS DIRECTED BY ENGINEER. PIPE BEDDED IN SELECT MATERIAL, CLASS II (TYPE 1) OR CLASS III. TRENCH BACKFILLED IN LOOSE 6" LAYERS COMPACTED TO TOP OF TRENCH USING LOCAL EXCAVATED MATERIAL IF APPROVED BY THE ENGINEER, OR SELECT MATERIAL. ALL MATERIAL SHALL BE FREE OF ROCKS, FOREIGN MATERIAL, AND FROZEN EARTH. COMPACTION SHALL BE TO APPROXIMATELY 95% DENSITY IN ACCORDANCE WITH AASHTO T-99 AS MODIFIED BY THE DEPARTMENT OF TRANSPORTATION.

MAXIMUM TRENCH WIDTH AT TOP OF PIPE

NOMINAL PIPE SIZE (INCHES)	TRENCH WIDTH (INCHES)	NOMINAL PIPE SIZE (INCHES)	TRENCH WIDTH (INCHES)
4	28	20	44
6	30	24	48
8	32	30	54
10	34	36	60
12	36	42	66
14	38	48	72
16	40	54	78
18	42		

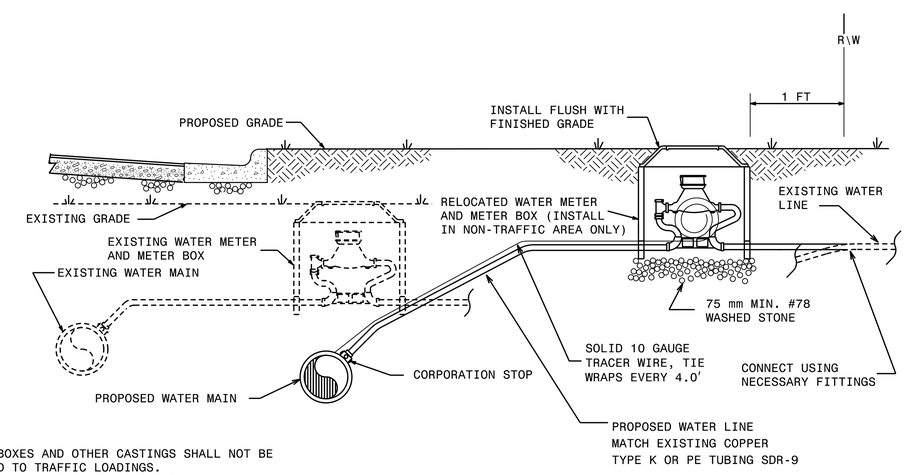

1. METER BOXES AND OTHER CASTINGS SHALL NOT BE EXPOSED TO TRAFFIC LOADINGS.
2. METERS SHALL READ IN CUBIC FEET.
3. METERS SHALL BE PROVIDED BY CITY OF ROCKY MOUNT.
4. CORP STOPS, CURB STOPS AND CONNECTORS SHALL BE SOLID BRASS IAW AWWA C800.
5. WATER METERS ARE TO BE LOCATED 3' RIGHT OF SEWER STACK.
6. INSTALL DETECTABLE SOLID 10 GUAGE TRACER WIRE. USE TIE WRAPS @ 48" INTERVALS TO SECURE WIRE TO PIPE.
7. TRACER WIRE SHALL BE STUBBED OUT MIN. 12" @ EA. METER BOX.

WATER METER RELOCATION DETAIL

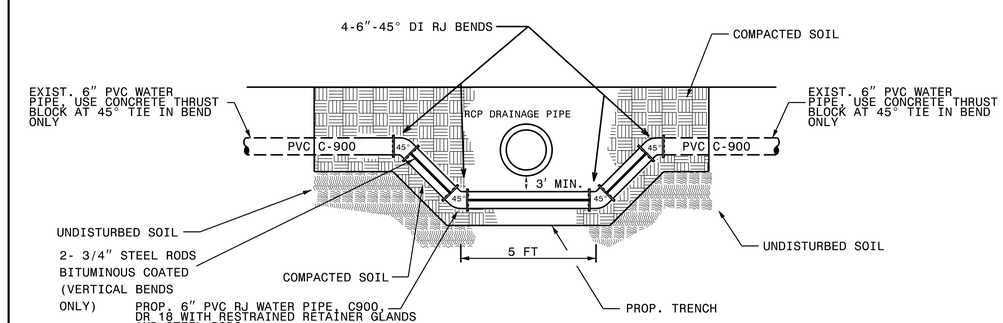

WATER PIPE CROSSING STORM DRAIN

28-DEC-2017 11:02
C:\Program Files\PROJECTS\2015\A20151100.00 Mulkey - W-5601A Onslow County\Design\Utilities\Engineering\UC\Proj\2018 Standard Plans\W-5601A_Ut_dtl_UC3A_psh_2018.dgn
$$$$USERNAME$$$$