DocuSign Envelope ID: 57F8C133-ECB6-4D08-AB1E-779FC91ECD1C

6/2/99

PAVEMENT SCHEDULE

C1	PROP. APPROX. 3″ ASPHALT CONCRETE SURFACE COURSE TYPE S9.5B, AT AN AVERAGE RATE OF 165 LBS. PER SQ. YD. IN EACH OF TWO LAYERS.
C2	PROP. APPROX. 1.5″ ASPHALT CONCRETE SURFACE COURSE TYPE S9.5B, AT AN AVERAGE RATE OF 165 LBS. PER SQ. YD.
C3	PROP. VAR. DEPTH ASPHALT CONCRETE SURFACE COURSE, TYPE S9.5B, AT AN AVERAGE RATE OF 110 LBS. PER SQ. YD. PER 1″ DEPTH TO BE PLACED IN LAYERS NOT LESS THAN 1.5″ IN DEPTH OR GREATER THAN 2″ IN DEPTH.
E1	PROP. APPROX. 5.5″ ASPHALT CONCRETE BASE COURSE, TYPE B25.0C, AT AN AVERAGE RATE OF 627 LBS. PER SQ. YD.
E2	PROP. APPROX. 7.5″ ASPHALT CONCRETE BASE COURSE, TYPE B25.0C AT AN AVERAGE RATE OF 427.5 LBS. PER SQ. YD. IN EACH OF TWO LAYERS.
E3	PROP. VAR. DEPTH ASPHALT CONCRETE BASE COURSE, TYPE B25.0C, AT AN AVERAGE RATE OF 114 LBS. PER SQ. YD. PER 1″ DEPTH TO BE PLACED IN LAYERS NOT LESS THAN 3″ IN DEPTH OR GREATER THAN 5.5″ IN DEPTH.
T	EARTH MATERIAL.
U	EXISTING PAVEMENT.
V	VARIABLE MILLING DEPTH 0′ TO 1.5″
W1	WEDGING EXISTING PAVEMENT.

NOTE: ALL PAVEMENT EDGE SLOPES ARE 1:1 UNLESS OTHERWISE NOTED.

CALYX
ENGINEERS + CONSULTANTS
6750 TRYON ROAD
CARY, NC 27518
phone: 919.851.1912
CALYXengineers.com
NC License # F-1333

PROJECT REFERENCE NO.	SHEET NO.
W-5601A	2A-1

ROADWAY DESIGN ENGINEER
NORTH CAROLINA PROFESSIONAL ENGINEER SEAL 15759 STEPHEN C. BRONDI
DocuSigned by: Stephen C. Brondi
6/12/2018

PAVEMENT DESIGN ENGINEER
NORTH CAROLINA PROFESSIONAL ENGINEER SEAL 022896 CLARK S. MORRISON
DocuSigned by: Clark S. Morrison
2/14/2018

DOCUMENT NOT CONSIDERED FINAL UNLESS ALL SIGNATURES COMPLETED

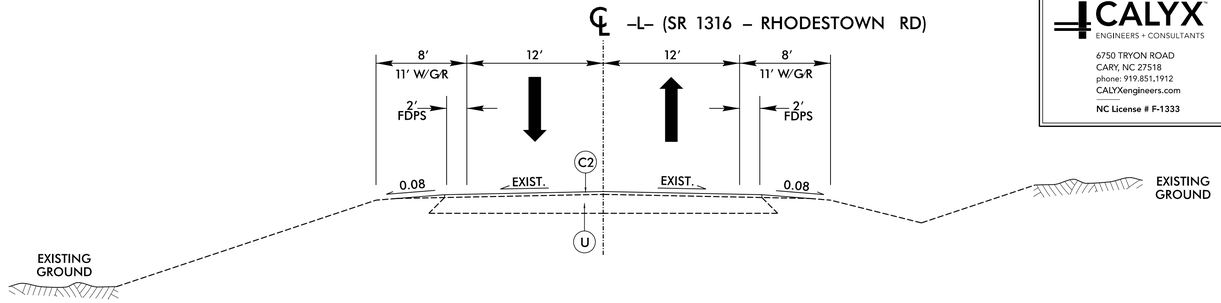

TYPICAL SECTION NO. 1

USE TYPICAL SECTION NO. 1 AS FOLLOWS:
–L– STA. 10+15.00 TO STA. 11+20.00

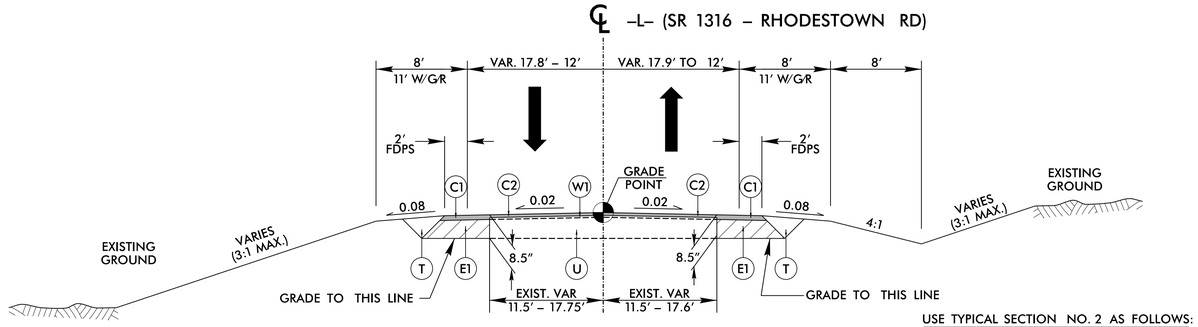

TYPICAL SECTION NO. 2

USE TYPICAL SECTION NO. 2 AS FOLLOWS:
–L– STA. 11+20.00 TO STA. 16+48.00
–L– STA. 24+75.00 TO STA. 29+30.00

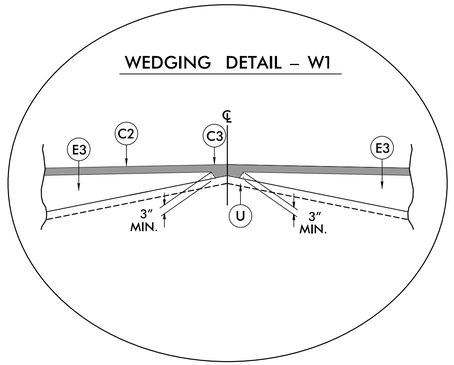

TYPICAL SECTION NO. 3

USE TYPICAL SECTION NO. 3 AS FOLLOWS:
–L– STA. 16+48.00 TO STA. 24+75.00

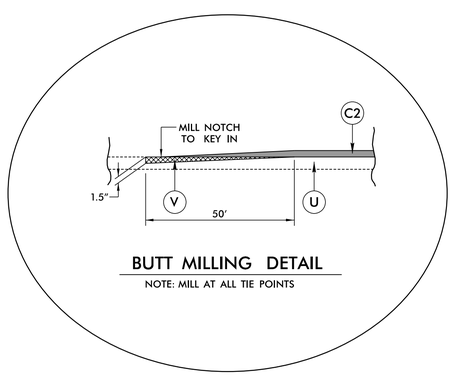

BUTT MILLING DETAIL

NOTE: MILL AT ALL TIE POINTS

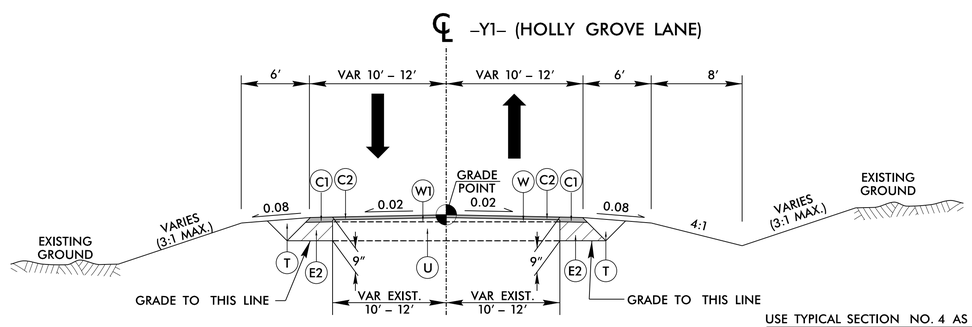

TYPICAL SECTION NO. 4

USE TYPICAL SECTION NO. 4 AS FOLLOWS:
–Y1– STA. 10+12.01 TO STA. 11+71.00

2/12/2018
R:\Roadway\Proj\W-5601A_rdy_TYP.dgn
mwilkinson