DocuSign Envelope ID: D48AE18D-8407-40B7-91B3-0F09D79FB893

09/08/99
3/21/2023
pw:\\aecom-na-pw.bentley.com:AECOM_USA_North_Carolina\Documents\60512233-U-5914 - NC 133\900-CAD GIS\910_CAD\70_NCDOT_TIP\Roadway\Proj\U5914_Rdy_tsh.dgn
patrick.mcpherson

TIP PROJECT: U-5914

CONTRACT: DC00424

See Sheet 1A For Index of Sheets
See Sheet 1B For Conventional Symbols

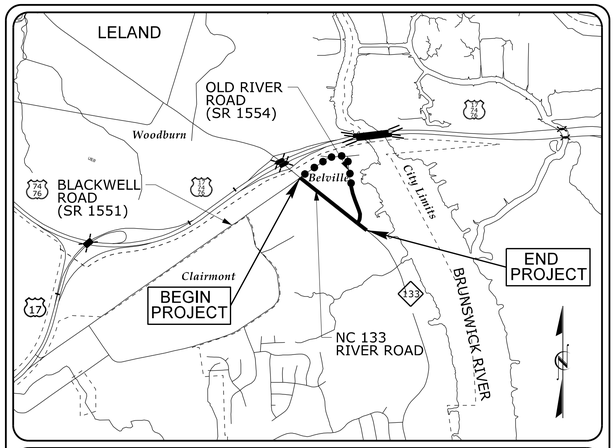

VICINITY MAP

NOT TO SCALE ••• DETOUR

STATE OF NORTH CAROLINA
DIVISION OF HIGHWAYS

BRUNSWICK COUNTY

LOCATION: NC 133 FROM SR 1551 (BLACKWELL ROAD) TO SR 1554 (OLD RIVER ROAD) EAST OF OLD RIVER

TYPE OF WORK: GRADING, PAVING, WIDENING, STRUCTURES, DRAINAGE RESURFACING, SIGNALS, AND SIGNING

STATE	STATE PROJECT REFERENCE NO.	SHEET NO.	TOTAL SHEETS
N.C.	U-5914	1	

STATE PROJ. NO.	F.A. PROJ. NO.	DESCRIPTION
44647.1.1		PE
44647.2.1		R/W
44647.3.1		CONST



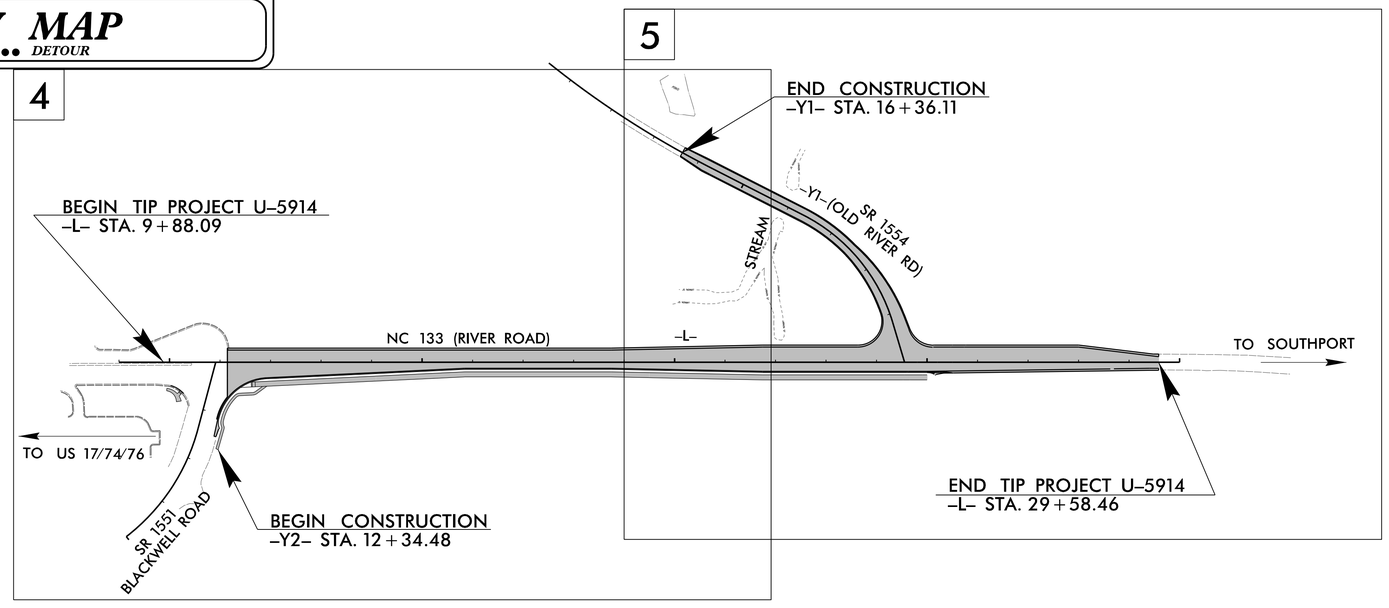

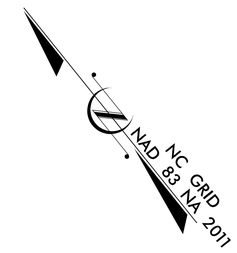

SUBMITTAL: 100% PLANS
DATE: FEBUARY 24, 2023

DOCUMENT NOT CONSIDERED FINAL UNLESS ALL SIGNATURES COMPLETED

GRAPHIC SCALES

50 25 0 50 100
PLANS

50 25 0 50 100
PROFILE (HORIZONTAL)

10 5 0 10 20
PROFILE (VERTICAL)

DESIGN DATA

ADT 2019 = 22,700
ADT 2039 = 32,100
K = 10 %
D = 60 %
T = 4 % *
V = 50 MPH
* TTST =1% DUAL 3%
FUNC CLASS =
MINOR ARTERIAL
TIER

PROJECT LENGTH

LENGTH ROADWAY TIP PROJECT U-5914 = 0.373 MILES
TOTAL LENGTH OF TIP PROJECT U-5914 = 0.373 MILES

Prepared in the Office of:
AECOM
NC FIRM LICENSE No: F-0342
5438 Wade Park Blvd, Suite 200
Raleigh, NC 27607
(919) 854-6200

2018 STANDARD SPECIFICATIONS

RIGHT OF WAY DATE:
JANUARY 10, 2022

LETTING DATE:
APRIL 20, 2023

EDWARD G. EDENS, P.E.
PROJECT ENGINEER

PATRICK B. MCPHERSON, E.I.
PROJECT DESIGN ENGINEER

ERIC C. MURRAY
PROJECT ENGINEER
NCDOT CONTACT

HYDRAULICS ENGINEER
DocuSigned by:
SIGNATURE: P.E. 3/21/2023
NORTH CAROLINA PROFESSIONAL SEAL 037863 ENGINEER MEME D. BUSCEMI

ROADWAY DESIGN ENGINEER
DocuSigned by:
Edward Glenn Edens, Jr., PE
SIGNATURE: P.E. 3/21/2023
NORTH CAROLINA PROFESSIONAL SEAL 18470 ENGINEER EDWARD GLENN EDENS, JR.

STATE OF NORTH CAROLINA DEPARTMENT OF TRANSPORTATION

DocuSign Envelope ID: D48AE18D-8407-40B7-91B3-0F09D79FB893

STATE OF NORTH CAROLINA, DIVISION OF HIGHWAYS

INDEX OF SHEETS, GENERAL NOTES AND 2018 ROADWAY ENGLISH STANDARD DRAWINGS

PROJECT REFERENCE NO.	SHEET NO.
U-5914	1A

ROADWAY DESIGN ENGINEER

NORTH CAROLINA PROFESSIONAL SEAL 18470 ENGINEER

DocuSigned by: Edward Collins, Jr., PE
5A6D1CEC4FA4A8...

3/21/2023

Prepared in the Office of: AECOM 5438 Wade Park, Boulevard, Suite 200 Raleigh, NC 27607 (919) 461-1100 NC FIRM LICENSE No: F-0342

DOCUMENT NOT CONSIDERED FINAL UNLESS ALL SIGNATURES COMPLETED

U-5914: INDEX OF SHEETS

SHEET NUMBER	SHEET
1	TITLE SHEET
1A	INDEX OF SHEETS, GENERAL NOTES AND LIST OF STANDARD DRAWINGS
1B	CONVENTIONAL SYMBOLS
2A-1 THRU 2A-2	TYPICAL SECTIONS
2A-3	HANDRAIL DETAIL
2A-4	CURB RAMP DETAIL
2C-1	GUARDRAIL INSTALLATION DETAIL
2D-1	DRAINAGE DETAIL
3B-1	ROADWAY SUMMARIES
3D-1THRU 3D-2	DRAINAGE SUMMARIES
3G-1	GEOTECHNICAL SUMMARIES
3P-1	PARCEL INDEX
4 THRU 5	PLAN SHEETS
6	PROFILE SHEETS
RW-01 THRU RW-05	RIGHT OF WAY / SURVEY PLANS
TMP-1 THRU TMP-04	TRANSPORTATION MANAGEMENT PLANS
PMP-1 THRU PMP-3	PAVEMENT MARKING & SIGNING
EC-01 THRU EC-07	EROSION CONTROL PLANS
SIG-1.0 THRU SIG-2.6	SIGNAL PLANS
UC-01 THRU UC-06	UTILITY CONSTRUCTION PLANS
UO-1 THRU UO-3	UTILITIES BY OTHERS PLANS
X-0 THRU X-11	CROSS SECTIONS
C-01 THRU C-06	CULVERT SHEETS

EFF. 01-16-2018
REV.

2018 ROADWAY ENGLISH STANDARD DRAWINGS

The following Roadway Standards as appear in "Roadway Standard Drawings" Highway Design Branch -
N. C. Department of Transportation - Raleigh, N. C., Dated January, 2018 are applicable to this project
and by reference hereby are considered a part of these plans:

STD.NO.	TITLE
DIVISION 2 - EARTHWORK	
200.03	Method of Clearing - Method III
225.02	Guide for Grading Subgrade - Secondary and Local
225.03	Deceleration and Acceleration Lanes
225.04	Method of Obtaining Superelevation - Two Lane Pavement
DIVISION 3 - PIPE CULVERTS	
300.01	Method of Pipe Installation
DIVISION 5 - SUBGRADE, BASES AND SHOULDERS	
560.01	Method of Shoulder Construction - High Side of Superelevated Curve - Method I
DIVISION 6 - ASPHALT BASES AND PAVEMENTS	
654.01	Pavement Repairs
DIVISION 8 - INCIDENTALS	
806.01	Concrete Right-of-Way Marker
838.07	Conc. Endwall for Single & Double Pipe Culvrts - 40"x31" thru 66"x51" Arch 90 Skew
838.22	Reinforced Concrete Endwall - for Double and Triple 54" Pipes 90 Skew
838.33	Reinforced Concrete Endwall - for Single 66" Pipe 90 Skew
840.02	Concrete Catch Basin - 12" thru 54" Pipe
840.03	Frame, Grates and Hood - for Use on Standard Catch Basin
840.54	Manhole Frame and Cover
846.01	Concrete Curb, Gutter and Curb & Gutter
848.01	Concrete Sidewalk
848.04	Street Turnout
848.05	Curb Ramp - Proposed Curb & Gutter
848.06	Curb Ramp - Existing Curb & Gutter
852.01	Concrete Islands
862.01	Guardrail Placement
862.02	Guardrail Installation
876.02	Guide for Rip Rap at Pipe Outlets

GENERAL NOTES: 2018 SPECIFICATIONS
EFFECTIVE: 01-16-2018
REVISED:

GRADING AND SURFACING:

THE GRADE LINES SHOWN DENOTE THE FINISHED ELEVATION OF THE PROPOSED SURFACING AT GRADE POINTS SHOWN ON THE TYPICAL SECTIONS. WHERE NO GRADE LINES ARE SHOWN, THE PROFILES SHOWN DENOTE THE TOP ELEVATION OF THE EXISTING PAVEMENT ALONG THE CENTER LINE OF SURVEY ON WHICH THE PROPOSED RESURFACING WILL BE PLACED. GRADE LINES MAY BE ADJUSTED BY THE ENGINEER IN ORDER TO SECURE A PROPER TIE-IN.

CLEARING:

CLEARING ON THIS PROJECT SHALL BE PERFORMED TO THE LIMITS ESTABLISHED BY METHOD III.

SUPERELEVATION:

ALL CURVES ON THIS PROJECT SHALL BE SUPERELEVATED IN ACCORDANCE WITH STD. NO. 225.04 AND STD. NO. 225.05 USING THE RATE OF SUPERELEVATION AND RUNOFF SHOWN ON THE PLANS. SUPERELEVATION IS TO BE REVOLVED ABOUT THE GRADE POINTS SHOWN ON THE TYPICAL SECTIONS.

SHOULDER CONSTRUCTION:

ASPHALT, EARTH, AND CONCRETE SHOULDER CONSTRUCTION ON THE HIGH SIDE OF SUPERELEVATED CURVES SHALL BE IN ACCORDANCE WITH STD. NO. 560.02.

SIDE ROADS:

THE CONTRACTOR WILL BE REQUIRED TO DO ALL NECESSARY WORK TO PROVIDE SUITABLE CONNECTIONS WITH ALL ROADS, STREETS, AND DRIVES ENTERING THIS PROJECT. THIS WORK WILL BE PAID FOR AT THE CONTRACT UNIT PRICE FOR THE PARTICULAR ITEMS INVOLVED.

STREET TURNOUT:

STREET RETURNS SHALL BE CONSTRUCTED IN ACCORDANCE WITH STD. NO. 848.04 USING THE RADII NOTED ON PLANS.

GUARDRAIL:

THE GUARDRAIL LOCATIONS SHOWN ON THE PLANS MAY BE ADJUSTED DURING CONSTRUCTION AS DIRECTED BY THE ENGINEER. THE CONTRACTOR SHOULD CONSULT WITH THE ENGINEER PRIOR TO ORDERING GUARDRAIL MATERIAL.

UTILITIES:

ANY RELOCATION OF EXISTING UTILITIES WILL BE ACCOMPLISHED BY OTHERS.

RIGHT-OF-WAY MARKERS:

ALL RIGHT-OF-WAY MARKERS ON THIS PROJECT SHALL BE PLACED BY OTHERS.

CURB RAMPS:

CURB RAMPS ARE SHOWN ON THE PLANS AT APPROXIMATE LOCATIONS.
CONSTRUCT ALL CURB RAMPS ACCORDANCE WITH STD 848.05 AND/OR 848.06.

8/17/99
P:\CAD\70_NCDOT_TIP\Roadway\Proj\U5914_Rdy_tsh.dgn
3/21/2023
pw:\\aecom-na-pw.bentley.com:AECOM_USA_North_Carolina\Documents\60512233-U-5914 - NC 133\900-CAD GIS\910_CAD\70_NCDOT_TIP\Roadway\Proj\U5914_Rdy_tsh.dgn
patrick.meghan

PROJECT REFERENCE NO.	SHEET NO.
U-5914	1B

STATE OF NORTH CAROLINA, DIVISION OF HIGHWAYS

CONVENTIONAL PLAN SHEET SYMBOLS

Note: Not to Scale **S.U.E. = Subsurface Utility Engineering*

BOUNDARIES AND PROPERTY:

- State Line
- County Line
- Township Line
- City Line
- Reservation Line
- Property Line
- Existing Iron Pin — EIP
- Computed Property Corner
- Property Monument — ECM
- Parcel/Sequence Number — 123
- Existing Fence Line
- Proposed Woven Wire Fence
- Proposed Chain Link Fence
- Proposed Barbed Wire Fence
- Existing Wetland Boundary — WLB
- Proposed Wetland Boundary — WLB
- Existing Endangered Animal Boundary — EAB
- Existing Endangered Plant Boundary — EPB
- Existing Historic Property Boundary — HPB
- Known Contamination Area: Soil — S
- Potential Contamination Area: Soil — S
- Known Contamination Area: Water — W
- Potential Contamination Area: Water — W
- Contaminated Site: Known or Potential

BUILDINGS AND OTHER CULTURE:

- Gas Pump Vent or U/G Tank Cap
- Sign — S
- Well — W
- Small Mine
- Foundation
- Area Outline
- Cemetery
- Building
- School
- Church
- Dam

HYDROLOGY:

- Stream or Body of Water
- Hydro, Pool or Reservoir
- Jurisdictional Stream — JS
- Buffer Zone 1 — BZ 1
- Buffer Zone 2 — BZ 2
- Flow Arrow
- Disappearing Stream
- Spring
- Wetland
- Proposed Lateral, Tail, Head Ditch — FLOW
- False Sump

RAILROADS:

- Standard Gauge — CSX TRANSPORTATION
- RR Signal Milepost — MILEPOST 35
- Switch — SWITCH
- RR Abandoned
- RR Dismantled

RIGHT OF WAY & PROJECT CONTROL:

- Secondary Horiz and Vert Control Point
- Primary Horiz Control Point
- Primary Horiz and Vert Control Point
- Exist Permanent Easement Pin and Cap
- New Permanent Easement Pin and Cap
- Vertical Benchmark
- Existing Right of Way Marker
- Existing Right of Way Line
- New Right of Way Line — RW
- New Right of Way Line with Pin and Cap — RW
- New Right of Way Line with Concrete or Granite R/W Marker — RW
- New Control of Access Line with Concrete C/A Marker — CA
- Existing Control of Access — CA
- New Control of Access — CA
- Existing Easement Line — E
- New Temporary Construction Easement — E
- New Temporary Drainage Easement — TDE
- New Permanent Drainage Easement — PDE
- New Permanent Drainage / Utility Easement — DUE
- New Permanent Utility Easement — PUE
- New Temporary Utility Easement — TUE
- New Aerial Utility Easement — AUE

ROADS AND RELATED FEATURES:

- Existing Edge of Pavement
- Existing Curb
- Proposed Slope Stakes Cut — C
- Proposed Slope Stakes Fill — F
- Proposed Curb Ramp — CR
- Existing Metal Guardrail
- Proposed Guardrail
- Existing Cable Guiderail
- Proposed Cable Guiderail
- Equality Symbol
- Pavement Removal

VEGETATION:

- Single Tree
- Single Shrub
- Hedge
- Woods Line
- Orchard
- Vineyard — Vineyard

EXISTING STRUCTURES:

MAJOR:

- Bridge, Tunnel or Box Culvert — CONC
- Bridge Wing Wall, Head Wall and End Wall — CONC WW

MINOR:

- Head and End Wall — CONC HW
- Pipe Culvert
- Footbridge
- Drainage Box: Catch Basin, DI or JB — CB
- Paved Ditch Gutter
- Storm Sewer Manhole — S
- Storm Sewer — S

UTILITIES:

POWER:

- Existing Power Pole
- Proposed Power Pole
- Existing Joint Use Pole
- Proposed Joint Use Pole
- Power Manhole — P
- Power Line Tower
- Power Transformer
- U/G Power Cable Hand Hole
- H-Frame Pole
- U/G Power Line LOS B (S.U.E.*) — P
- U/G Power Line LOS C (S.U.E.*) — P
- U/G Power Line LOS D (S.U.E.*) — P

TELEPHONE:

- Existing Telephone Pole
- Proposed Telephone Pole
- Telephone Manhole — T
- Telephone Pedestal — T
- Telephone Cell Tower
- U/G Telephone Cable Hand Hole — HH
- U/G Telephone Cable LOS B (S.U.E.*) — T
- U/G Telephone Cable LOS C (S.U.E.*) — T
- U/G Telephone Cable LOS D (S.U.E.*) — T
- U/G Telephone Conduit LOS B (S.U.E.*) — TC
- U/G Telephone Conduit LOS C (S.U.E.*) — TC
- U/G Telephone Conduit LOS D (S.U.E.*) — TC
- U/G Fiber Optics Cable LOS B (S.U.E.*) — T FO
- U/G Fiber Optics Cable LOS C (S.U.E.*) — T FO
- U/G Fiber Optics Cable LOS D (S.U.E.*) — T FO

WATER:

- Water Manhole — W
- Water Meter
- Water Valve
- Water Hydrant
- U/G Water Line LOS B (S.U.E*) — W
- U/G Water Line LOS C (S.U.E*) — W
- U/G Water Line LOS D (S.U.E*) — W
- Above Ground Water Line — A/G Water

TV:

- TV Pedestal — C
- TV Tower
- U/G TV Cable Hand Hole — HH
- U/G TV Cable LOS B (S.U.E.*) — TV
- U/G TV Cable LOS C (S.U.E.*) — TV
- U/G TV Cable LOS D (S.U.E.*) — TV
- U/G Fiber Optic Cable LOS B (S.U.E.*) — TV FO
- U/G Fiber Optic Cable LOS C (S.U.E.*) — TV FO
- U/G Fiber Optic Cable LOS D (S.U.E.*) — TV FO

GAS:

- Gas Valve
- Gas Meter
- U/G Gas Line LOS B (S.U.E.*) — G
- U/G Gas Line LOS C (S.U.E.*) — G
- U/G Gas Line LOS D (S.U.E.*) — G
- Above Ground Gas Line — A/G Gas

SANITARY SEWER:

- Sanitary Sewer Manhole
- Sanitary Sewer Cleanout
- U/G Sanitary Sewer Line — SS
- Above Ground Sanitary Sewer — A/G Sanitary Sewer
- SS Forced Main Line LOS B (S.U.E.*) — FSS
- SS Forced Main Line LOS C (S.U.E.*) — FSS
- SS Forced Main Line LOS D (S.U.E.*) — FSS

MISCELLANEOUS:

- Utility Pole
- Utility Pole with Base
- Utility Located Object
- Utility Traffic Signal Box — S
- Utility Unknown U/G Line LOS B (S.U.E.*) — ?UTL
- U/G Tank; Water, Gas, Oil
- Underground Storage Tank, Approx. Loc. — UST
- A/G Tank; Water, Gas, Oil
- Geoenvironmental Boring
- U/G Test Hole LOS A (S.U.E.*)
- Abandoned According to Utility Records — AATUR
- End of Information — E.O.I.

DocuSign Envelope ID: 60515E3E-9E62-4668-948D-618F78EBA483

8/17/99

PAVEMENT SCHEDULE FINAL PAVEMENT DESIGN	
C1	PROP. APPROX. 1.5″ ASPHALT CONCRETE SURFACE COURSE, TYPE S9.5B, AT AN AVERAGE RATE OF 165 LBS. PER SQ. YD.
C2	PROP. APPROX. 2″ ASPHALT CONCRETE SURFACE COURSE, TYPE S9.5B, AT AN AVERAGE RATE OF 110 LBS. PER SQ. YD IN EACH OF TWO LAYERS.
C3	PROP. APPROX. 3″ ASPHALT CONCRETE SURFACE COURSE, TYPE S9.5B, AT AN AVERAGE RATE OF 165 LBS. PER SQ. YD IN EACH OF TWO LIFTS
C4	PROP. VAR. DEPTH ASPHALT CONCRETE SURFACE COURSE, TYPE S9.5B, AT AN AVERAGE RATE OF 110 LBS. PER SQ. YD. PER 1″ DEPTH TO BE PLACED IN LAYERS NOT TO EXCEED 1.5″ IN DEPTH
D1	PROP. APPROX. 4″ ASPHALT CONCRETE INTERMEDIATE COURSE, TYPE I19.0C, AT AN AVERAGE RATE OF 456 LBS. PER SQ. YD.
D2	PROP. VAR. DEPTH ASPHALT CONCRETE INTERMEDIATE COURSE, TYPE I19.0C, AT AN AVERAGE RATE OF 114 LBS. PER SQ. YD. PER 1″ DEPTH TO BE PLACED IN LAYERS NOT LESS THAN 2.5″ OR GREATER THAN 4″ IN DEPTH.
E1	PROP. APPROX. 4″ ASPHALT CONCRETE BASE COURSE, TYPE B25.0C, AT AN AVERAGE RATE OF 456 LBS. PER SQ. YD.
E2	PROP. VAR. DEPTH ASPHALT CONCRETE BASE COURSE, TYPE B25.0C, AT AN AVERAGE RATE OF 114 LBS. PER SQ. YD. PER 1″ DEPTH, TO BE PLACED IN LAYERS NOT GREATER THAN 5.5″ IN DEPTH OR LESS THEN 4″ IN DEPTH.
J	PROP. 8″ AGGREGATE BASE COURSE
R	2′-6″ CONCRETE CURB AND GUTTER
S	CONCRETE SIDEWALK
T	EARTH MATERIAL
U	EXISTING PAVEMENT
W	VARIABLE DEPTH ASPHALT PAVEMENT (SEE STANDARD WEDGING DETAIL)

PAVEMENT EDGE SLOPES ARE 1:1 UNLESS SHOWN OTHERWISE
AGGREGATE BASE & ASPHALT BASE SHELF IS 6″ UNLESS SHOWN OTHERWISE

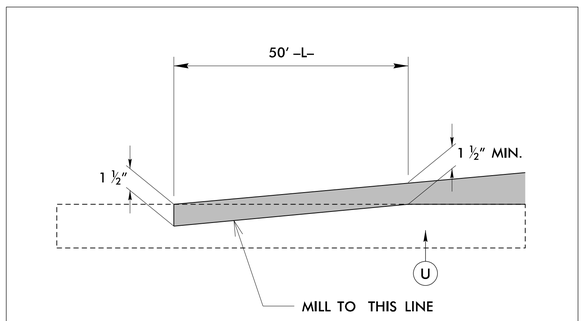

DETAIL SHOWING MILLED PAVEMENT TIE–IN

℄ –L– RIVER ROAD SE (NC 133)

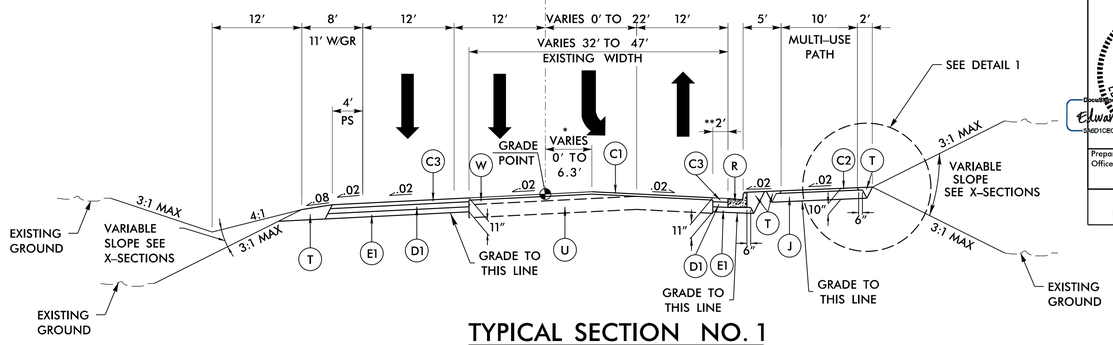

TYPICAL SECTION NO. 1

–L– STA. 11+14.38 TO STA. 18+74.00

* CROWN POINT OFFSET FROM CENTERLINE VARIES 6.3′ RT AT STA. 11+14.38 TO 0′ AT STA. 12+64.38

** REMOVE AND REPLACE 2′ OF EXISTING PAVEMENT ADJACENT TO PROPOSED CURB AND GUTTER

℄ –L– RIVER ROAD SE (NC 133)

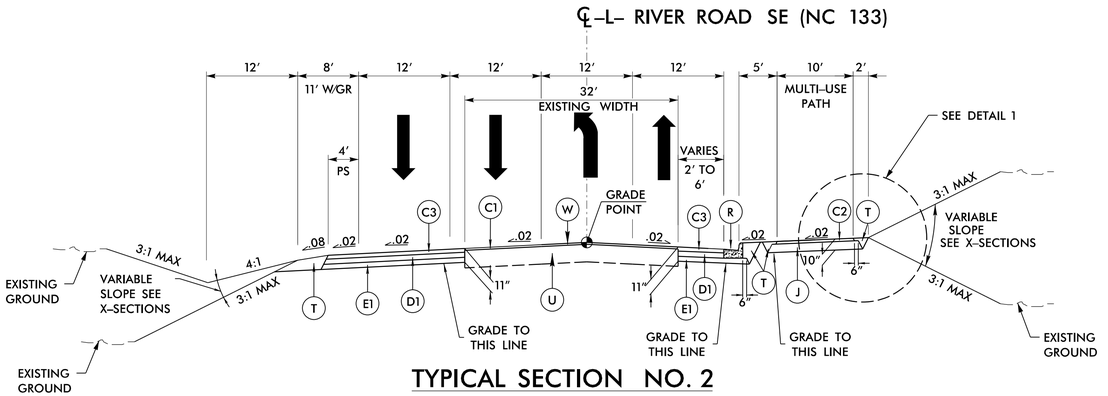

TYPICAL SECTION NO. 2

–L– STA. 18+74.00 TO STA. 29+58.46

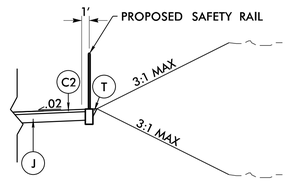

DETAIL 1

–L– STA. 12+75.00 TO STA. 14+50.00

–L– STA. 20+75.00 TO STA. 25+25.00

℄ –L–

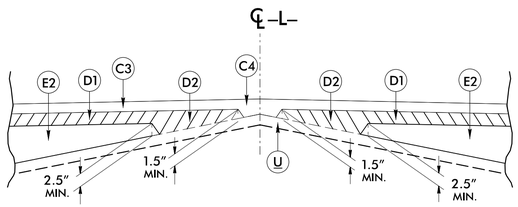

Detail Showing Method of Wedging

WEDGING DETAIL

PROJECT REFERENCE NO.	SHEET NO.
U-5914	2A-1
R/W SHEET NO.	

ROADWAY DESIGN ENGINEER
NORTH CAROLINA PROFESSIONAL SEAL 18470 ENGINEER EDWARD ALLEN FOGLEMAN, JR.
Docusigned by: Edward Allen Fogleman Jr. 5A01D1CECAFF4A0...
3/7/2023

PAVEMENT DESIGN ENGINEER
NORTH CAROLINA PROFESSIONAL SEAL 022896 ENGINEER GLENN THOMAS MORRISON
Docusigned by: Glenn Morrison B0A110DD1E2E4A8...
3/8/2023

Prepared in the Office of: AECOM NC FIRM LICENSE No: F-0342 5438 Wade Park Boulevard, Suite 200 Raleigh, NC 27607 (919) 461-1100

DOCUMENT NOT CONSIDERED FINAL UNLESS ALL SIGNATURES COMPLETED

2/28/2023
pw:\\aecom-na-pw.bentley.com:AECOM_USA_North_Carolina\Documents\60512233-U-5914 - NC 133\900-CAD GIS\910_CAD\70_NCDOT_TIP\Roadway\Proj\U5914_Rdy_typ.dgn
patrick.morrison

DocuSign Envelope ID: 60515E3E-9E62-4668-948D-618F78EBA483

8/17/99

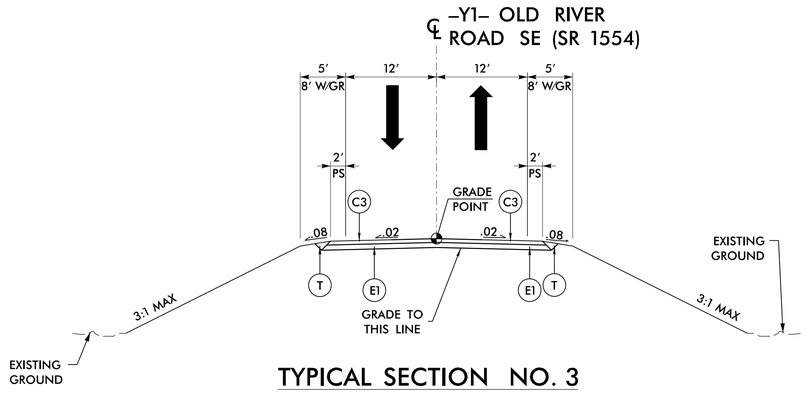

TYPICAL SECTION NO. 3

–Y1– STA. 10+31.30 TO STA. 15+25.00

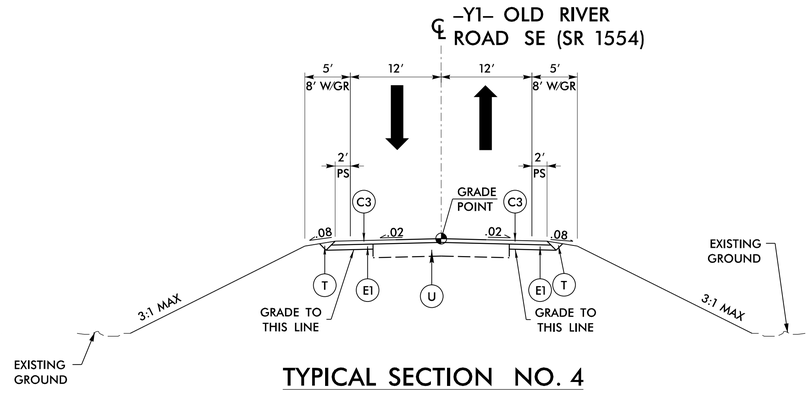

TYPICAL SECTION NO. 4

–Y1– STA. 15+25.00 TO STA. 16+36.11

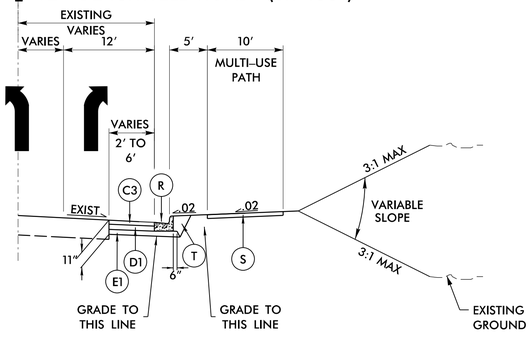

TYPICAL SECTION NO. 5

–Y2– STA. 12+34.48 TO STA. 13+77.26

PROJECT REFERENCE NO.	SHEET NO.
U-5914	2A-2
R/W SHEET NO.	

ROADWAY DESIGN ENGINEER

NORTH CAROLINA PROFESSIONAL SEAL 18470 ENGINEER EDWARD GLENN ROBBINS, JR.

DocuSigned by: Edward Robbins 5A4D1CECAFF...

3/7/2023

PAVEMENT DESIGN ENGINEER

NORTH CAROLINA PROFESSIONAL SEAL 022896 ENGINEER PAUL S MORRISON

DocuSigned by: Paul Morrison B0A110DD...

3/8/2023

Prepared in the Office of: AECOM

NC FIRM LICENSE No: F-0342
5438 Wade Park Boulevard, Suite 200
Raleigh, NC 27607
(919) 461-1100

DOCUMENT NOT CONSIDERED FINAL UNLESS ALL SIGNATURES COMPLETED

C1	1½″ S9.5B
C2	2″ S9.5B
C3	3″ S9.5B
C4	VAR S9.5B
D1	4″ I19.0C
D2	VAR I19.0C
E1	4″ B25.0C
E2	VAR B25.0C
J	8″ ABC
R	2′-6″ C&G
S	CONC. SIDEWALK
T	EARTH MATERIAL
U	EXIST. PVMT.
W	WEDGING DET.

3/3/2023
Bentley Systems, Inc. C:\Users\pmorrison\Documents\CAD\70_NCDOT_TIP\Roadway\Proj\U5914_Rdy_typ.dgn
Bentley Systems, Inc. C:\Users\pmorrison\Documents\CAD\70_NCDOT_TIP\Roadway\Proj\U5914_Rdy_typ.dgn
3/3/2023

DocuSign Envelope ID: 60515E3E-9E62-4668-948D-618F78EBA483

8/17/99

PROJECT REFERENCE NO.	SHEET NO.
U-5914	2A-3
R/W SHEET NO.	

ROADWAY DESIGN ENGINEER

NORTH CAROLINA PROFESSIONAL SEAL 18470 ENGINEER EDWARD GLENN BYERLY JR.

Digitally signed by Edward Glenn Byerly, PE
DN: cn=Edward Glenn Byerly, PE, o=AECOM, ou=Transportation, email=glenn.byerly@aecom.com, c=US
Date: 2023.03.07 15:57:39 -05'00'

3/7/2023

Prepared in the Office of: AECOM
NC FIRM LICENSE No: F-0342
5438 Wade Park Boulevard, Suite 200
Raleigh, NC 27607
(919) 461-1100

DOCUMENT NOT CONSIDERED FINAL UNLESS ALL SIGNATURES COMPLETED

SAFETY RAIL

HANDRAIL DETAIL

PLAN SHEET 4: STA. 12+75 TO STA. 14+50
PLAN SHEET 5: STA. 20+75 TO STA. 25+25

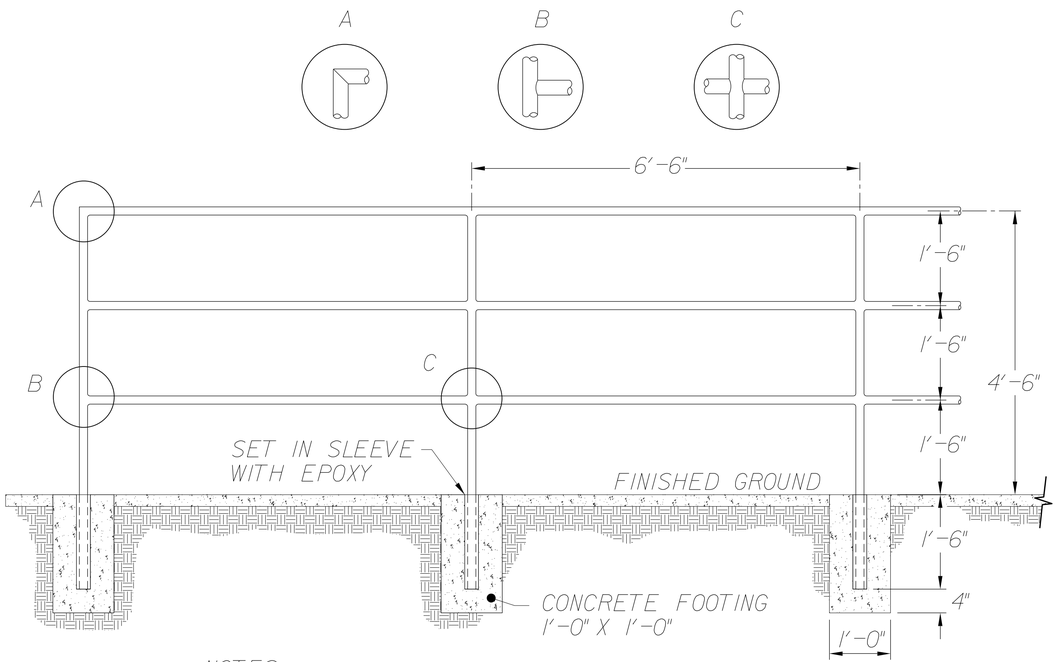

NOTES:
1. ALL CONCRETE TO BE CLASS A 3000 P.S.I. COMPRESSIVE STRENGTH.
2. TYPE OF PIPE TO BE USED IS 2" MAXIMUM OUTER DIAMETER, BLACK IRON, LOW CARBON PIPE.
3. ALL JOINTS TO HAVE A 1/2" FILLET WELD.
4. AFTER INSTALLATION PRIME AND PAINT ASSEMBLY WITH BLACK, ALL WEATHER ENAMEL.

3/3/2023
Date/Time: 3/3/2023 8:47:26 AM
Path: c:\pw\aecom-na-pw.bentley.com:aECOM_USA_North_Carolina\Documents\60512233-U-5914 - NC 133\900-CAD GIS\910_CAD\70_NCDOT_TIP\Roadway\Proj\U5914_Rdy_typ.dgn

DocuSign Envelope ID: 60515E3E-9E62-4668-948D-618F78EBA483

PROJECT REFERENCE NO.	SHEET NO.
U5914	2A-4

ROADWAY DESIGN ENGINEER

NORTH CAROLINA PROFESSIONAL SEAL 18470 ENGINEER GLENN EDWIN JR.

Edward Glenn Edwin Jr., PE

3/7/2023

DOCUMENT NOT CONSIDERED FINAL UNLESS ALL SIGNATURES COMPLETED

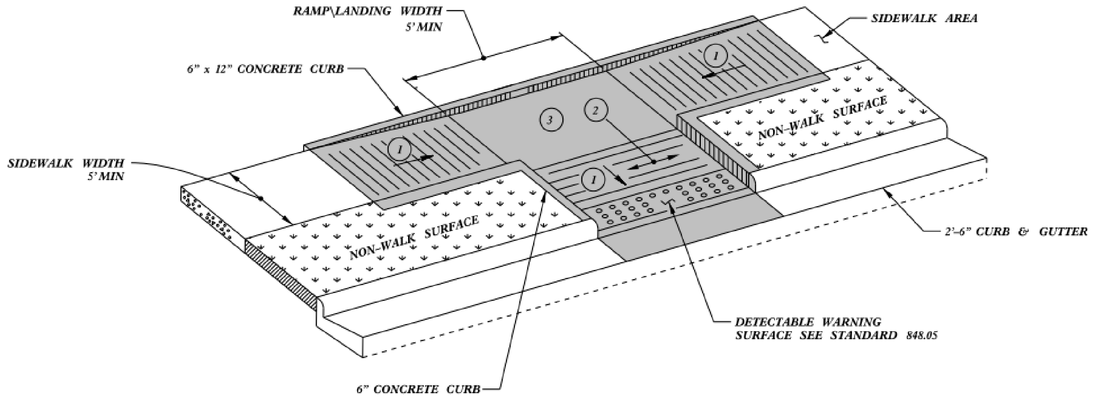

TYPE 3

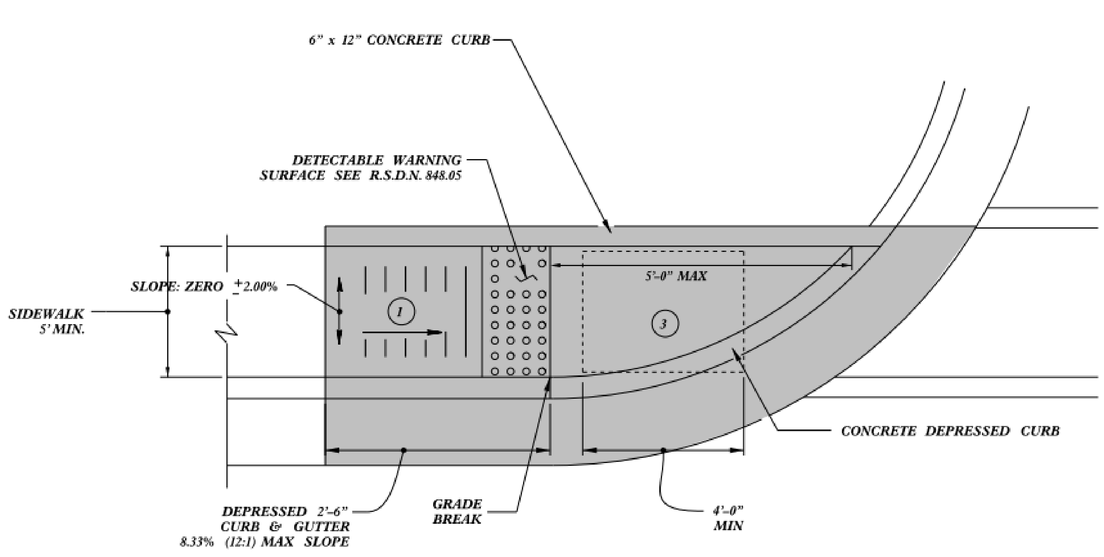

TYPE 1

PAY LIMITS FOR 1 CURB RAMP

1. 8.33% (12:1) MAX RAMP SLOPE
2. CROSS SLOPE: 2.00%
3. CURB RAMPS REQUIRE A (4'-0") MINIMUM LANDING WITH A MAXIMUM CROSS SLOPE AND LONGITUDINAL SLOPE OF 2.00% WHERE PEDESTRIANS PERFORM TURNING MANEUVERS. SLOPE TO DRAIN TO CURB.

REFER TO ROADWAY STANDARD DRAWING NUMBER 848.05 SHEET 3 OF 3 FOR ALL RAMP NOTES

6/2/99
2/28/2023
pw:\\aecom-na-pw.bentley.com:AECOM_USA_North_Carolina\Documents\60512233-U-5914 - NC 133\900-CAD GIS\910_CAD\70_NCDOT_TIP\Roadway\Proj\U5914_Rdy_typ.dgn
patrick.mcpherson

DocuSign Envelope ID: 60515E3E-9E62-4668-948D-618F78EBA483

PROJECT REFERENCE NO.	SHEET NO.
U-5914	2C-1

STATE OF
NORTH CAROLINA
DEPT. OF TRANSPORTATION
DIVISION OF HIGHWAYS
RALEIGH, N.C.

SPECIAL DETAIL FOR
GUARDRAIL PLACEMENT
25'-0" CLEAR SPAN

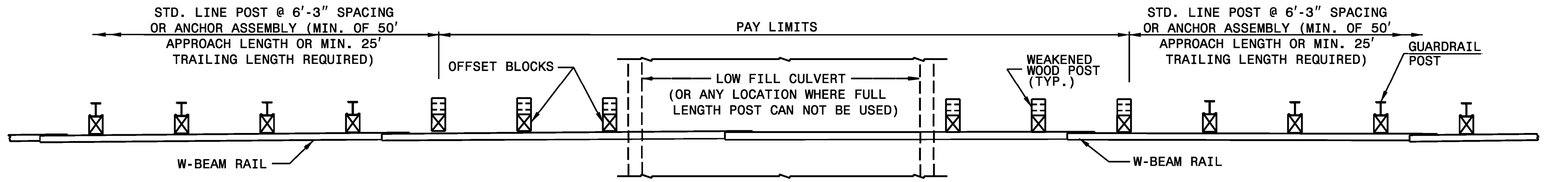

PLAN

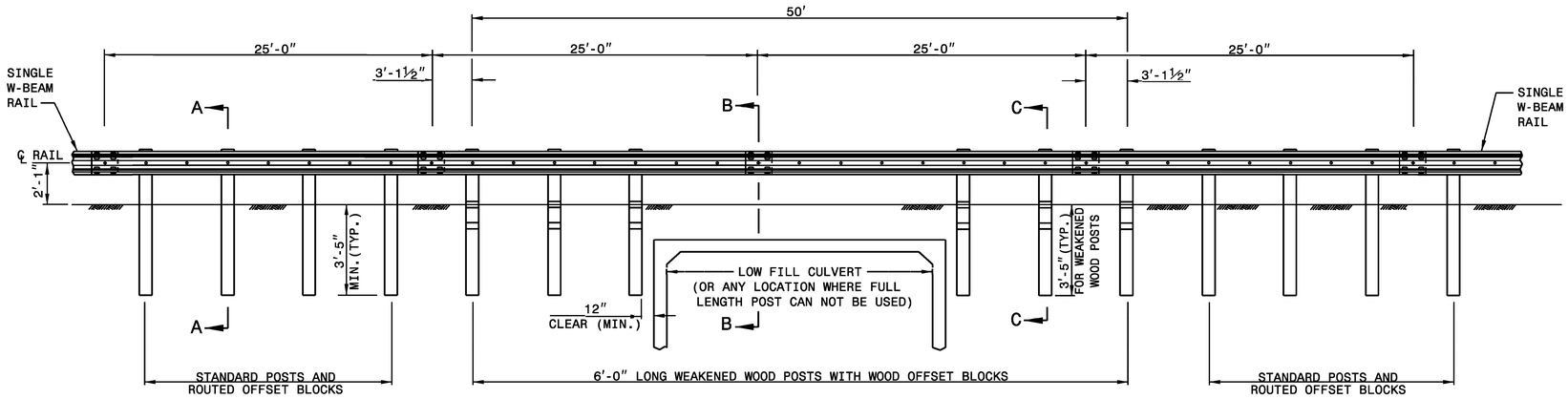

ELEVATION
25'-0" GUARDRAIL SPAN

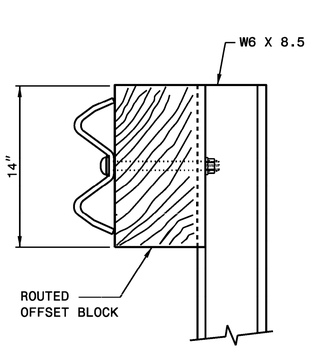

SECTION A-A

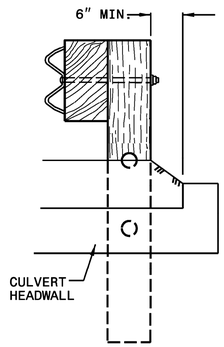

SECTION B-B

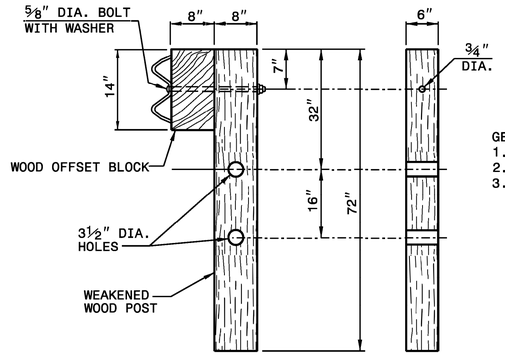

SECTION C-C FRONT
WEAKENED WOOD POST

GENERAL NOTES:
1. LAP RAIL IN THE DIRECTION OF TRAFFIC FLOW.
2. SEE ROADWAY PLANS FOR LOCATIONS AND CONTINUATION OF RAIL OR END SECTIONS.
3. MINIMUM DISTANCE OF 5 FEET BEHIND THE GUARDRAIL SHOULD BE CLEAR OF ANY FIXED-OBJECT HAZARDS THAT COULD SNAG AN IMPACTING VEHICLE.

SHEET - OF -
862D01

STATE OF
NORTH CAROLINA
DEPT. OF TRANSPORTATION
DIVISION OF HIGHWAYS
RALEIGH, N.C.

SPECIAL DETAIL FOR
GUARDRAIL PLACEMENT
25'-0" CLEAR SPAN

SHEET - OF -
862D01

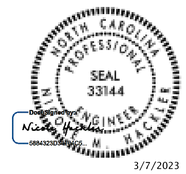

DOCUMENT NOT CONSIDERED FINAL
UNLESS ALL SIGNATURES COMPLETED

CONTRACTS STANDARDS
AND DEVELOPMENT UNIT
Office 919-707-6950 FAX 919-250-4119

25'-0" CLEAR SPAN
GUARDRAIL PLACEMENT

ORIGINAL BY: _____ DATE: _____
MODIFIED BY: _____ DATE: _____
CHECKED BY: _____ DATE: _____
FILE SPEC.: _____

DocuSign Envelope ID: D48AE18D-8407-40B7-91B3-0F09D79FB893

PROJECT REFERENCE NO.	SHEET NO.
U-5914	2D-1

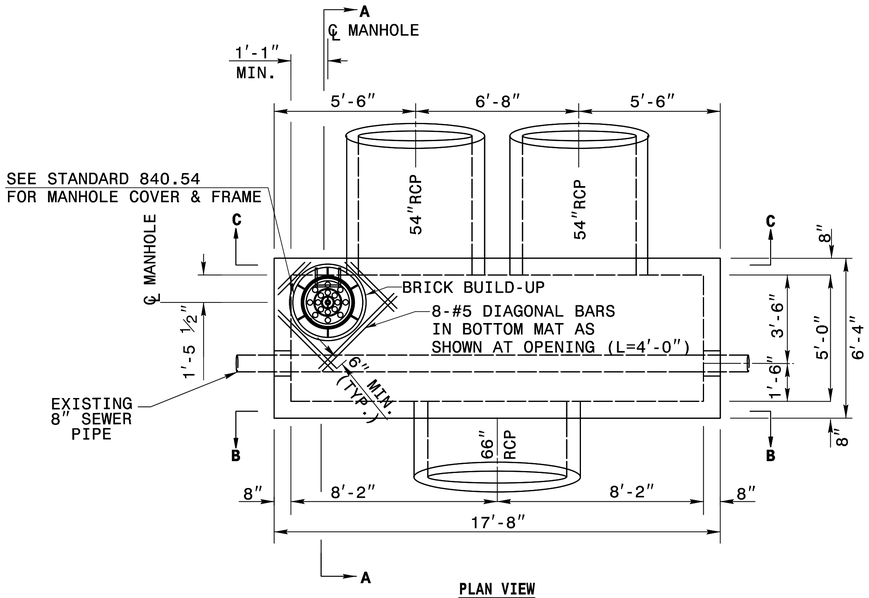

PLAN VIEW

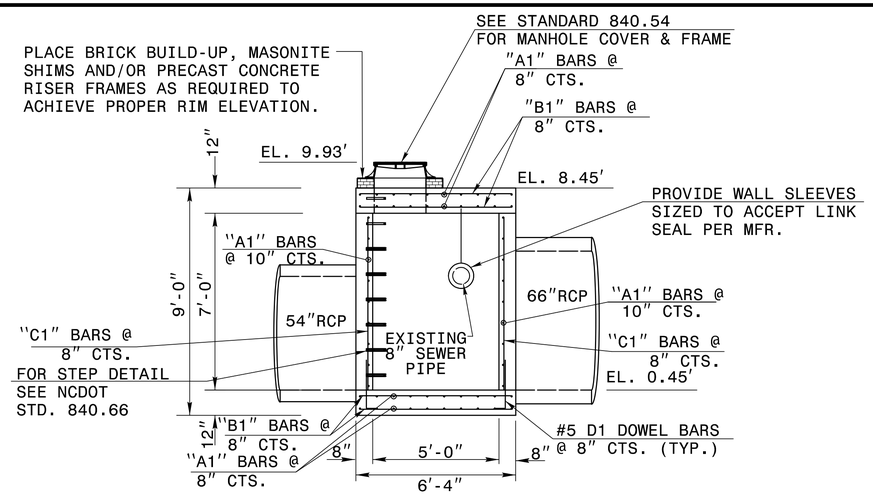

SECTION A-A

BILL OF MATERIALS				
BAR	QTY	SIZE	LENGTH	WEIGHT
A1	58	#5	17'-4"	1049
B1	126	#5	6'-0"	789
C1	74	#5	7'-0"	540
D1	74	#5	3'-6"	270
E1	36	#5	4'-6"	169
F1	8	#5	3'-8"	20
F2	8	#5	5'-10"	31
F3	4	#5	6'-10"	18
TOTAL REINF. STEEL (lbs.)				2886
TOTAL CONC. CU. YDS.				16.1

NO DEDUCTIONS HAVE BEEN MADE TO ACCOMMODATE PIPES.

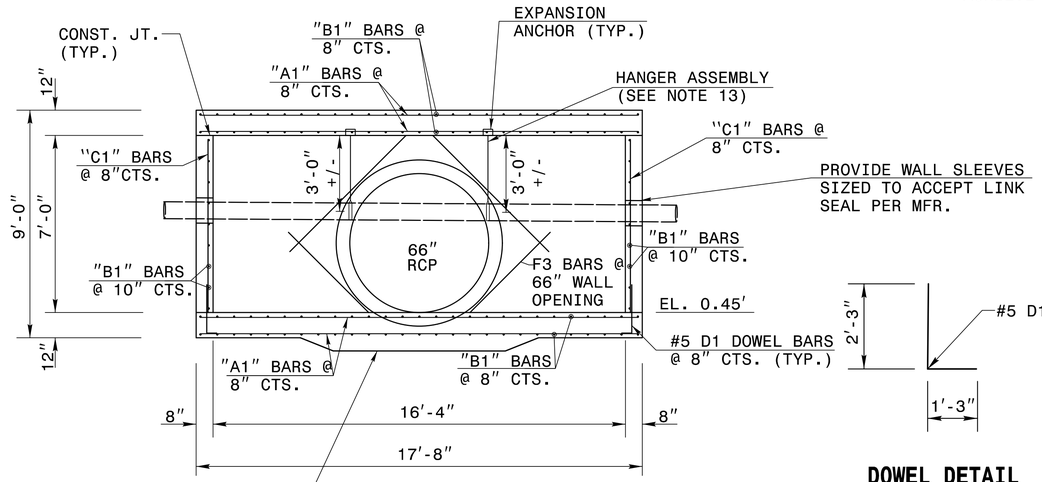

SECTION B-B

DOWEL DETAIL

NOTE: DOWEL BARS TO MATCH VERTICAL BARS IN WALL

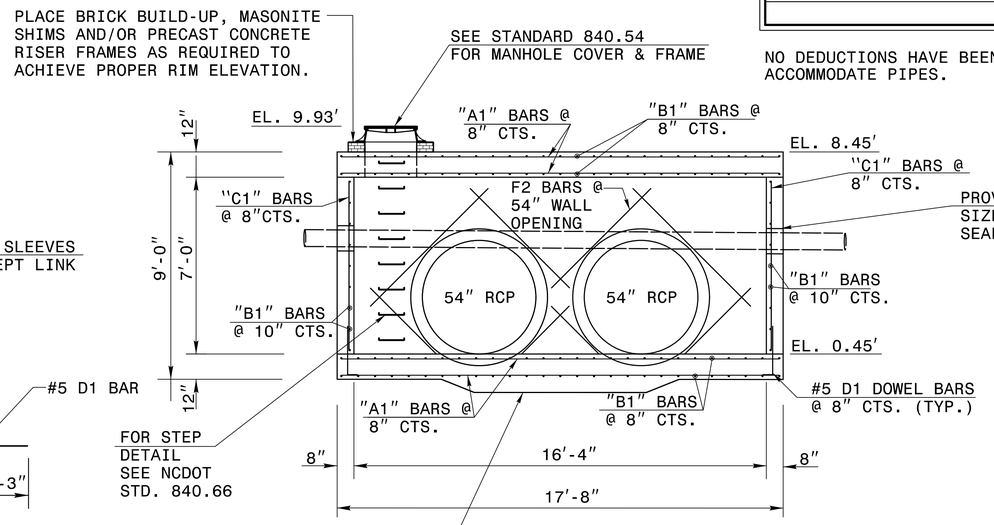

SECTION C-C

GENERAL NOTES:

1. USE CLASS "AA" CONCRETE THROUGHOUT.
2. CONSTRUCT CONCRETE BOX IN ACCORDANCE WITH SECTION 825 OF THE STANDARD SPECIFICATIONS.
3. CONSTRUCT BOTTOM SLAB ON A MINIMUM 6" SUB- BASE OF COMPACTED COARSE AGGREGATE.
4. USE FORMS TO CONSTRUCT THE BOTTOM SLAB.
5. ADJUST LENGTH OF STEEL BARS AS NEEDED TO COMPENSATE FOR PIPES AND ACCESS OPENING.
6. REINFORCING STEEL SHALL CONFORM TO ASTM A 615, GRADE 60 DEFORMED BARS.
7. CUT OR BEND STEEL BARS AS NEEDED TO PROVIDE 2" CLEARANCE.
8. PROVIDE UTILITY CONFLICT BOX WITH STEPS 12" ON CENTER. USE STEPS WHICH COMPLY WITH STD. DRAWING 840.66.
9. IF REINFORCED CONCRETE PIPE IS SET IN BOTTOM SLAB OF BOX,ADD TO SLAB AS SHOWN ON STD. NO. 840.00.
10. PROVIDE 2" DIAMETER WEEP HOLES IN THE WALL PERPENDICULAR TO TRAFFIC AND LOCATE 6" FROM PIPE OPENINGS AND JOINTS AND 1'-0" ABOVE OUTLET PIPE INVERT.
11. INSTALL STONE DRAINS OF A MIN. 1.0 CF OF NO. 78M STONE IN A POROUS FABRIC BAG OR WRAP AT EACH WEEP OR AS DIRECTED BY THE ENGINEER.
12. CHAMBER ALL EXPOSED CORNERS 1".
13. HANGERS SHALL BE GALVANIZED STEEL CLEVIS HANGERS SPACED AT 1/3RD POINTS (6'-0" MAX.) FOLLOW MFR RECOMMENDATIONS FOR CLEVIS HANGER INSTALLATION.
14. EXISTING SANITARY SEWER INSIDE THE UTILITY CONFLICT BOX WILL BE REPLACED WITH CLASS 350 DIP. SEE UTILITY PLANS UC-5 & UC-6.

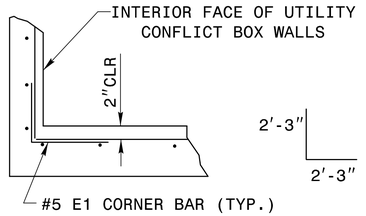

CORNER DETAIL

NOTE: SPACE CORNER BARS TO MATCH HORIZ. BARS IN WALL

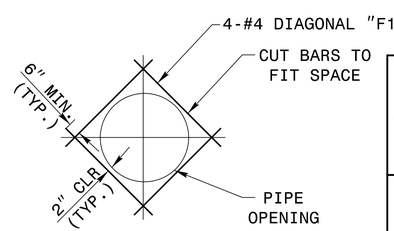

WALL OPENING REINFORCEMENT

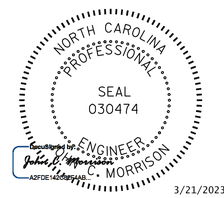

DOCUMENT NOT CONSIDERED FINAL UNLESS ALL SIGNATURES COMPLETED

AECOM
NC FIRM LICENSE No: F-0342
5438 Wade Park Blvd, Suite 200
Raleigh, NC 27607
(919) 854-6200

SPECIAL UTILITY CONFLICT BOX 1-66" RCP, 2-54" RCP

ORIGINAL BY:	KS	DATE:	4/11/2022
MODIFIED BY:		DATE:	
CHECKED BY:	CM	DATE:	4/11/2022
FILE SPEC.:			

$$$$$$$SYSTIME$$$$$$
$$$$$$$

PROJECT REFERENCE NO.	SHEET NO.
U-5914	2G-1

GEOTECHNICAL ENGINEER

NORTH CAROLINA PROFESSIONAL SEAL 032171 ENGINEER HYNJOUNG PARK

DocuSigned by: A7F1BDB1C5DA4E6... SIGNATURE 6/4/2018 DATE

ENGINEER

SIGNATURE DATE

DOCUMENT NOT CONSIDERED FINAL UNLESS ALL SIGNATURES COMPLETED

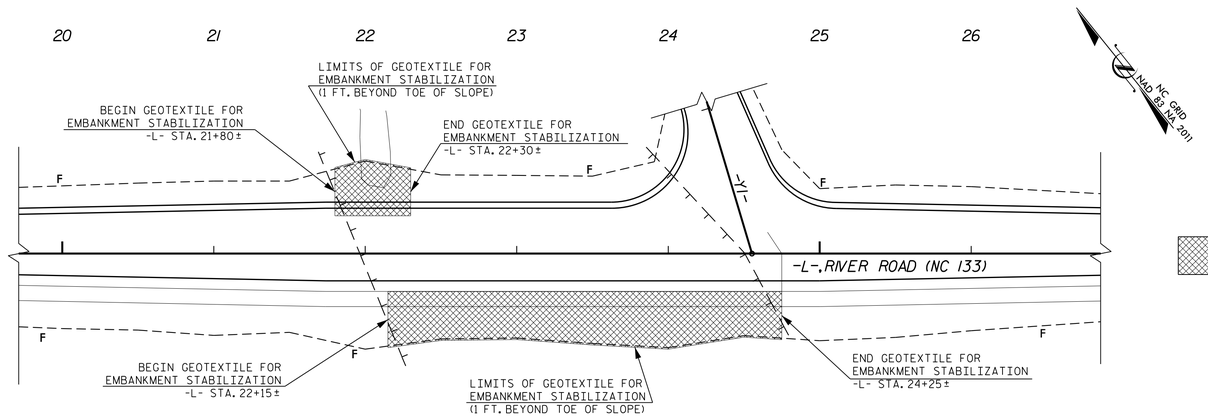

AREA OF GEOTEXTILE FOR EMBANKMENT STABILIZATION, MACHINE OR ROLL DIRECTION PERPENDICULAR TO EMBANKMENT CENTERLINE

PLAN VIEW
N.T.S.

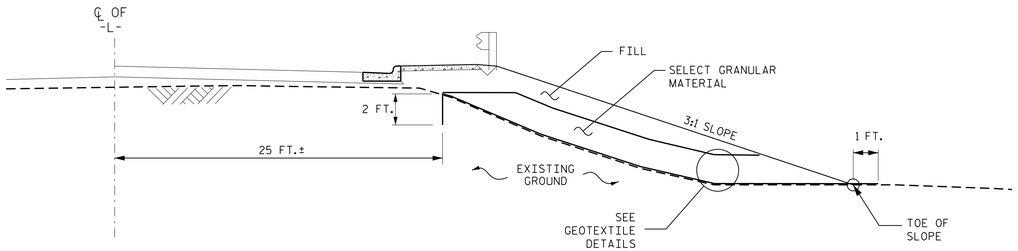

TYPICAL CROSS SECTION
N.T.S.

NOTES

1. DO NOT GRUB, ONLY CLEAR THE AREA WITHIN THE LIMITS OF THE GEOTEXTILE FOR EMBANKMENT STABILIZATION.
2. PLACE GEOTEXTILE FOR EMBANKMENT STABILIZATION PERPENDICULAR TO EMBANKMENT CENTERLINE ON THE EXISTING GROUND AS SHOWN IN THE PLAN OR AS DIRECTED BY THE ENGINEER.
3. PLACE THE GEOTEXTILE WITHOUT ANY WRINKLES OR CREASES.
4. PLACE 2 FT. OF SELECT GRANULAR MATERIAL ON THE GEOTEXTILE FOR EMBANKMENT STABILIZATION.
5. NO SEAMS OR JOINTS ARE ALLOWED IN THE MACHINE DIRECTION OF GEOTEXTILE.
6. THE TERMS ROLL AND MACHINE DIRECTION ARE USED INTERCHANGEABLY.
7. ALL JOINTS IN THE CROSS MACHINE DIRECTION MUST BE OVERLAPPED A MINMUM OF 18 INCHES.
8. FOR GEOTEXTILE FOR EMBANKMENT STABILIZATION , SEE GEOTEXTILE FOR EMBANKMENT STABILIZATION SPECIAL PROVISION.

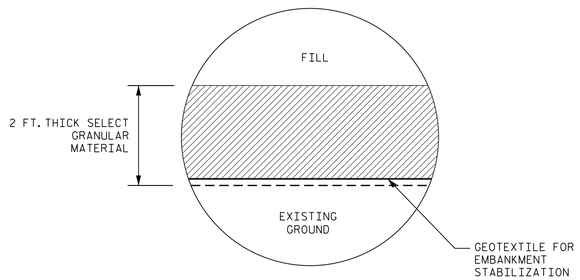

GEOTEXTILE DETAILS
N.T.S.

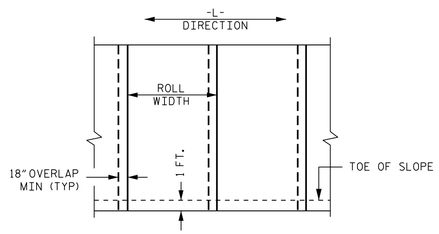

GEOTEXTILE OVERLAP DETAIL
(PLAN VIEW, N.T.S.)

QUANTITIES

GEOTEXTILE FOR EMBANKMENT STABILIZATION	1,100 SY*
SELECT GRANULAR MATERIAL	700 CY

* GEOTEXTILE FOR EMBANKMENT STABILIZATION ESTIMATED QUANTITY DOES NOT INCLUDE OVERLAPS OR WASTE.

PREPARED BY: J. PARK	DATE: 05/2018
REVIEWED BY: J. BATTS	DATE: 05/2018

NORTH CAROLINA DEPARTMENT OF TRANSPORTATION DIVISION OF HIGHWAYS

GEOTECHNICAL ENGINEERING UNIT

GEOTEXTILE FOR EMBANKMENT STABILIZATION DETAILS

REVISIONS

NO.	BY	DATE	NO.	BY	DATE
1			3		
2			4		

DocuSign Envelope ID: 60515E3E-9E62-4668-948D-618F78EBA483

COMPUTED BY: Patrick McPherson, EI
CHECKED BY: Ed Edens, PE

PROJECT REFERENCE NO.	SHEET NO.
U-5914	3B-1

STATE OF NORTH CAROLINA
DIVISION OF HIGHWAYS

SUMMARY OF EARTHWORK

IN CUBIC YARDS

Station	Station	Uncl. Excav.	Undercut	Embank. +%	Borrow	Waste
-L- 11+14.38	29+70.00	541		5949	5408	
-Y1- 10+31.30	16+36.11	8		1545	1537	
PROJECT TOTALS:		**549**	**0**	**7,494**	**6,945**	**0**
MATERIAL FOR SHOULDER CONSTRUCTION				470	470	
LOSS DUE TO CLEARING & GRUBBING				125		
ADDITIONAL UNDERCUT			600	750	750	
EARTH WASTE TO REPLACE BORROW					0	0
PROJECT TOTALS:		**549**	**600**	**8,839**	**8,165**	**0**
EST. 5% TO REPLACE TOP SOIL ON BORROW PIT					408	
GRAND TOTALS:		**549**	**600**	**8,839**	**8,573**	**0**
SAY:		**600**	**600**		**8,600**	

CONTINGENCY ITEMS PER NCDOT GEOTECHNICAL REPORT - DESIGN AND CONSTRUCTION RECOMMENDATIONS, DATED JUNE 4, 2018:
EST. SHALLOW UNDERCUT = 100 CUBIC YARDS
CLASS IV SUBGRADE STABILIZATION = 190 TONS

PAVEMENT REMOVAL SUMMARY

IN SQUARE YARDS

SURVEY LINE	Station	Station	LOCATION LT/RT/CL	ASPHALT REMOVAL	ASPHALT BREAKUP	CONCRETE REMOVAL	CONCRETE BREAKUP	REMARKS
L	11+71	20+00	RT	396.19				
L	25+34	26+41	RT	175.92				
L	28+95	29+70	LT	43.88				
Y1	10+19	10+74	CL	1738.65				
Y1	11+67	13+05	RT	1.56				
Y1	11+67	13+05	LT	1.16				
		TOTAL:		2,357.36				
		SAY:		2,360				

SUMMARY OF GUARDRAIL

"N" = DISTANCE FROM EDGE OF LANE TO FACE OF GUARDRAIL
TOTAL SHOULDER WIDTH = DISTANCE FROM EDGE OF TRAVEL LANE TO SHOULDER BREAK POINT.
FLARE LENGTH = DISTANCE FROM LAST SECTION OF PARALLEL GUARDRAIL TO END OF GUARDRAIL.
W = TOTAL WIDTH OF FLARE FROM BEGINNING OF TAPER TO END OF GUARDRAIL.
NG = NON-GATING IMPACT ATTENUATOR TYPE 350
G = GATING IMPACT ATTENUATOR TYPE 350

LINE	BEG. STA.	END STA.	LOC.	LENGTH			WARRANT POINT		"N" DIST.	TOTAL	FLARE LENGTH		W		ANCHORS							IMP. ATTEN. MIA-2			REMOVE EXISTING	SINGLE FACE CONCRETE	REMOVE AND STOCKPILE	REMARKS
				STRAIGHT	SHOP CURVED	DOUBLE FACED	APPR. END	TRAIL. END	FROM E.O.L.	SHLDR WIDTH	APPR. END	TRAIL. END	APPR. END	TRAIL. END	III	B-77	GREU TL-2	GREU TL-3	CABLE GUIDERAIL	CAT-1	TES	EA	G	NG	GUARDRAIL	CONCRETE BARRIER	STOCKPILE EXISTING	
-Y1-	11+98.78	14+70.20	RT	280.62			12+50.00	14+19.81	5	8	50	50	1	1				2										
-Y1-	11+97.41	15+50.00	LT	344.33			15+00.00	12+50.00	5	8	50	50	1	1				2										
-L-	21+00.66	22+29.00	RT																						129			
-L-	21+76.61	23+04.73	LT																						129			
			SUBTOTAL	**624.95**														**4**							258			
	ANCHOR UNIT DEDUCTIONS																											
		GREU TL-3 @ 50.00' EACH		-200.00																								
		GREU TL-2 @ 25.00' EACH		0.00																								
		B-77 @ 22.875' EACH		0.00																								
		CAT-1 @ 6.25' EACH		0.00																								
	ADDITIONAL GUARDRAIL POSTS = 5 EACH																											
			TOTAL	**424.9**														**4**							**258**			
			SAY	**425.0**														**4**							**258**			

USORLL1FBDNN3

COMPUTED BY: KDS DATE: 03/20/2023

CHECKED BY: MDB DATE: 03/20/2023

NORTH CAROLINA DEPARTMENT OF TRANSPORTATION
DIVISION OF HIGHWAYS

PROJECT NO.	SHEET NO.
U5914	3D-1

Note: Invert Elevations indicated are for Bid Purposes only and shall not be used for project construction stakeout.
See "Standard Specifications For Roads and Structures, Section 300-5".

LIST OF PIPES, ENDWALLS, ETC. (FOR PIPES 48 INCHES & UNDER)

LINE & STATION	OFFSET	STRUCTURE NUMBER FROM	STRUCTURE NUMBER TO	TOP ELEVATION FT.	INVERT ELEVATION FT.	INVERT ELEVATION FT.	MINIMUM REQUIRED SLOPE %	R.C. PIPE CLASS IV 12	15	18	24	30	36	42	48	R.C. PIPE CLASS V 12	15	18	24	30	36	42	48	54	60	66	72	78	84	ENDWALLS STD. 838.01 OR STD. 838.11 (UNLESS NOTED OTHERWISE) CY	REINFORCED ENDWALLS CY	DRAINAGE STRUCTURE MASONRY CY	QUANTITIES FOR DRAINAGE STRUCTURES NOTE: TOTAL LIN. FT. FOR PAY QUANTITY SHALL BE A + (1.3 X B) 0' THRU 5' EACH	A 5' THRU 10' LIN. FT.	B 10' AND ABOVE LIN. FT.	C.B. STD. 840.01 OR STD. 840.02	FRAME, GRATES, AND HOOD STD. 840.03 GRATE TYPE E	F	G	CONCRETE TRANSITIONAL SECTION D.I. STD. 852.04 OR STD. 852.06	C.B. STD. 852.05	OPEN THROAT C.B. STD. 840.04 OR STD. 840.05	CONCRETE BRIDGE APPROACH D.I. STD. 840.13	D.I. STD. 840.14 OR STD. 840.15	D.I. FRAME AND GRATES STD. 840.16	G.D.I. TYPE "A" STD. 840.17 OR STD. 840.26	G.D.I. TYPE "B" STD. 840.18 OR STD. 840.27	G.D.I. TYPE "D" STD. 840.19 OR STD. 840.28	G.D.I. (W.S. FLAT) FRAME WITH GRATE STD. 840.20	G.D.I. (W.S. FLAT) FRAME W/ 2 GRATES STD. 840.20	G.D.I. (W.S. SAG) FRAME W/ GRATE STD. 840.22	G.D.I. (W.S. SAG) FRAME W/ 2 GRATES STD. 840.22	G.D.I. (N.S. SAG) FRAME W/ GRATE STD. 840.24	G.D.I. (N.S. SAG) FRAME W/ 2 GRATES STD. 840.24	G.D.I. (N.S. FLAT) FRAME W/ GRATE STD. 840.29	G.D.I. (N.S. FLAT) FRAME W/ 2 GRATES STD. 840.29	DRIVEWAY D.I. STD. 840.30	FRAME W/ GRATE FOR DRIVEWAY STD. 840.30	J.B. STD. 840.31 OR STD. 840.32	ANGLED VANE GRATES AND FRAMES STD. 840.33	T.B.J.B. STD. 840.34	T.B.D.I. STD. 840.35	T.B.D.I. FOR STEEL GRATES STD. 840.36	STEEL FRAME WITH TWO GRATES STD. 840.37	TEMP STEEL PLATE COVER MASONRY DRAINAGE	#/#" SPRING BOX PIPE	SPRING BOX STD. 840.41	MIN DEPTH CONC C.B. SPECIAL DETAIL 840DD2	M.H. STD. 840.51, STD. 840.52, OR STD. 840.53	M.H. FRAME AND COVER STD. 840.54	PIPE REMOVAL LIN. FT.	REMARKS
L 12+86	28 RT	0401		19.2			1.4										32														1			1																										Minimum Depth CB
		0401	EX03		17.0	12.3																																																			
L 16+03	14 RT	0402		14.9			1.4										52														1			1																										Minimum Depth CB
		0402	0403		12.6	9.0																																																		
L 17+82	14 RT	0404		12.8			6.8										48														1			1																										Minimum Depth CB
		0404	0405		10.6	9.0																																																		
L 22+12	20 RT	0501		10.2			3.4																								1					1																								
		0501	0504		7.2	7.1	0.5		8																						1			1																								
L 20+48	17 RT	0502		10.8			0.5																								1			1																								
		0502	0504		7.8	7.0			152																																															
L 22+24	20 RT	0510		10.2			0.5																								1						1																							
		0510	0501		7.9	7.9	0.3		12																																															
L 24+54	60 RT	0511							84																																															
L 25+00	20 RT	0512																													1			1																								
		0512	0513		7.3	4.4	0.1		40																																														
L 24+55	57 RT																																																							63	

| | | | | | | | | | | | | | | | | | | |

USORLL7FBDNN3

COMPUTED BY: KDS DATE: 03/20/2023

CHECKED BY: MDB DATE: 03/20/2023

NORTH CAROLINA DEPARTMENT OF TRANSPORTATION
DIVISION OF HIGHWAYS

PROJECT NO.	SHEET NO.
U5914	3D-2

Note: Invert Elevations indicated are for Bid Purposes only and shall not be used for project construction stakeout.
See "Standard Specifications For Roads and Structures, Section 300-5".

LIST OF PIPES, ENDWALLS, ETC. (FOR PIPES 54 INCHES & OVER)

| LINE & STATION | OFFSET | STRUCTURE NUMBER FROM | STRUCTURE NUMBER TO | TOP ELEVATION FT. | INVERT ELEVATION FT. | INVERT ELEVATION FT. | MINIMUM REQUIRED SLOPE % | R.C. PIPE CLASS IV 12 | 15 | 18 | 24 | 30 | 36 | 42 | 48 | 54 | 60 | 66 | 72 | 78 | 84 | R.C. PIPE CLASS V 54 | 60 | 66 | 72 | 78 | 84 | ENDWALLS STD. 838.01 OR STD. 838.11 (UNLESS NOTED OTHERWISE) CY | REINFORCED ENDWALLS CY | DRAINAGE STRUCTURE MASONRY CY | QUANTITIES FOR DRAINAGE STRUCTURES NOTE: TOTAL LIN. FT. FOR PAY QUANTITY SHALL BE A + (1.3 X B) A 0' THRU 5' EACH | A 5' THRU 10' LIN. FT. | B 10' AND ABOVE LIN. FT. | C.B. STD. 840.01 OR STD. 840.02 | FRAME, GRATES, AND HOOD STD. 840.03 GRATE TYPE E | F | G | CONCRETE TRANSITIONAL SECTION D.I. STD. 852.04 OR STD. 852.06 | C.B. STD. 852.05 | OPEN THROAT C.B. STD. 840.04 OR STD. 840.05 | CONCRETE BRIDGE APPROACH D.I. STD. 840.13 | D.I. STD. 840.14 OR STD. 840.15 | D.I. FRAME AND GRATES STD. 840.16 | G.D.I. TYPE "A" STD. 840.17 OR STD. 840.26 | G.D.I. TYPE "B" STD. 840.18 OR STD. 840.27 | G.D.I. TYPE "D" STD. 840.19 OR STD. 840.28 | G.D.I. (W.S. FLAT) FRAME WITH GRATE STD. 840.20 | G.D.I. (W.S. FLAT) FRAME W/ 2 GRATES STD. 840.20 | G.D.I. (W.S. SAG) FRAME W/ GRATE STD. 840.22 | G.D.I. (W.S. SAG) FRAME W/ 2 GRATES STD. 840.22 | G.D.I. (N.S. SAG) FRAME W/ GRATE STD. 840.24 | G.D.I. (N.S. SAG) FRAME W/ 2 GRATES STD. 840.24 | G.D.I. (N.S. FLAT) FRAME W/ GRATE STD. 840.29 | G.D.I. (N.S. FLAT) FRAME W/ 2 GRATES STD. 840.29 | DRIVEWAY D.I. STD. 840.30 | FRAME W/ GRATE FOR DRIVEWAY STD. 840.30 | FRAME W/ GRATE STD. 840.31 OR STD. 840.32 | J.B. STD. 840.32 | ANGLED VANE GRATES AND FRAMES STD. 840.33 | T.B.J.B. STD. 840.34 | T.B.D.I. STD. 840.35 | T.B.D.I. FOR STEEL GRATES STD. 840.36 | STEEL FRAME WITH TWO GRATES STD. 840.37 | TEMP STEEL PLATE COVER MASONRY DRAINAGE | ##" SPRING BOX PIPE | SPRING BOX STD. 840.41 | UTILITY CONFLICT BOX SPECIAL DETAIL | M.H. STD. 840.51, STD. 840.52, OR STD. 840.53 | M.H. FRAME AND COVER STD. 840.54 | PIPE REMOVAL LIN. FT. | REMARKS |
|---|---|---

DocuSign Envelope ID: 60515E3E-9E62-4668-948D-618F78EBA483

COMPUTED BY: T.C. BOTTOMS DATE: 12/21/17
CHECKED BY: _____ DATE: _____

(1-16-18)

PROJECT NO.	SHEET NO.
U-5914	3G-1

STATE OF NORTH CAROLINA
DIVISION OF HIGHWAYS

SUMMARY OF SUBSURFACE DRAINAGE

LINE	Station	Station	Location LT/RT/CL	Drain Type* UD/BD/SD	LF
CONTINGENCY				SD	500
				TOTAL LF:	500

*UD = Underdrain
*BD = Blind Drain
*SD = Subsurface Drain

SUMMARY OF GEOTEXTILE FOR PAVEMENT STABILIZATION

LINE	Station	Station	Geotextile for Pavement Stabilization SY	Class IV Subgrade Stabilization TONS
CONTINGENCY				
		TOTAL SY/TONS:	0	0*

*Total tons of "Class IV Subgrade Stabilization" is only the estimated quantity for pavement stabilization and may only represent a portion of the subgrade stabilization quantity shown in the Item Sheets of the Proposal.

SUMMARY OF AGGREGATE SUBGRADE/STABILIZATION

LINE	Station	Station	Aggregate Type* ASU/AST	Aggregate Thickness INCHES	Shallow Undercut CY	Class IV Subgrade Stabilization TONS	Geotextile for Soil Stabilization SY	Stabilizer Aggregate TONS	Class IV Aggregate Stabilization TONS
CONTINGENCY			ASU	12	100	190	300		
			TOTAL CY/TONS/SY:		100	190**	300**	0	0

*ASU = Aggregate Subgrade
*AST = Aggregate Stabilization
**Total tons of "Class IV Subgrade Stabilization" and total square yards of "Geotextile for Soil Stabilization" are only the estimated quantities for ASU/AST and may only represent a portion of the subgrade stabilization and geotextile quantities shown in the Item Sheets of the Proposal.

SUMMARY OF ROCK PLATING

LINE	Beginning Slope (H:V)	Approx. Station	Ending Slope (H:V)	Approx. Station	Location LT/RT	Rock Plating Detail No. 1/2/3/4	Riprap Class* 1/2/B	Rock Plating SY
							TOTAL SY:	0

*Use Class 1, 2 or B riprap if riprap class is not shown for rock plating location.

SUMMARY OF REINFORCED SOIL SLOPES AND SLOPE EROSION CONTROL

LINE	Beginning Slope/ RSS (H:V)	Approx. Station	Ending Slope/ RSS (H:V)	Approx. Station	Location LT/RT	Reinforced Soil Slope (RSS) SY	Geocells SY	Coir Fiber Mat SY	Matting for Erosion Control SY
					TOTAL SY:	0	0	0*	0**

*Total square yards of "Coir Fiber Mat" is only the estimated quantity for slopes steeper than 2:1 (H:V) and may only represent a portion of the coir fiber mat quantity shown in the Item Sheets of the Proposal.
**Total square yards of "Matting for Erosion Control" is only the estimated quantity for RSS and may only represent a portion of the matting quantity shown in the Item Sheets of the Proposal.

SUMMARY OF PRE-SPLITTING OF ROCK

LINE	Beginning Rock Cut Slope (H:V)	Approx. Station	Ending Rock Cut Slope (H:V)	Approx. Station	Location LT/RT	Pre-splitting of Rock SY
					TOTAL SY:	0

SUMMARY OF SURCHARGES AND SURCHARGE WAITING PERIODS

LINE	Station	Station	Surcharge Height FT	MONTHS

SUMMARY OF SETTLEMENT GAUGES

Gauge No.	LINE and Station	Offset	
		Distance FT	Direction LT/RT
	TOTAL GAUGES (EACH):		

SUMMARY OF EMBANKMENT WAITING PERIODS

LINE	Station	Station	MONTHS

SUMMARY OF BRIDGE WAITING PERIODS

Bridge Description	End Bent/ Bent No.	MONTHS

DocuSign Envelope ID: 60515E3E-9E62-4668-948D-618F78EBA483

PROJ. REFERENCE NO.	SHEET NO.
U-5914	3P-1

STATE OF NORTH CAROLINA
DIVISION OF HIGHWAYS

PARCEL INDEX SHEET

PARCEL No.	SHEET No.	PROPERTY OWNER NAME
1	4	BELVILLE COMMONS POA, INC
2	4,5	URBAN SMART GROWTH BELVILLE, LLC
3	4	URBAN SMART GROWTH BELVILLE, LLC
4	5	URBAN SMART GROWTH BELVILLE, LLC
5	4,5	TOWN OF BELVILLE
6	5	NORTH CAROLINA STATE HWY COMM
7	5	TOWN OF BELVILLE
8	5	NORTH CAROLINA STATE HWY COMM

PARCEL No.	SHEET No.	PROPERTY OWNER NAME

DocuSign Envelope ID: 60515E3E-9E62-4668-948D-618F78EBA483

PROJECT REFERENCE NO.	SHEET NO.
U-5914	04
R/W SHEET NO.	

ROADWAY DESIGN ENGINEER — NORTH CAROLINA PROFESSIONAL SEAL 18470 — GLENN E. EDWARDS, JR. — 3/7/2023

HYDRAULICS ENGINEER — NORTH CAROLINA PROFESSIONAL SEAL 037863 — CHRISTOPHER D. BURGIN — 3/8/2023

Prepared in the Office of: AECOM — NC FIRM LICENSE No: F-0342, 5438 Wade Park Boulevard, Suite 200, Raleigh, NC 27607, (919) 461-1100

DOCUMENT NOT CONSIDERED FINAL UNLESS ALL SIGNATURES COMPLETED

REVISIONS

8/17/99

ADT 2019
ADT 2039 (IN HUNDREDS)

–L– RIVER ROAD (NC 133)

251 / 355	43 / 61	19 / 27	227 / 321

SR 1551 (BLACKWELL ROAD)

62 / 88

NAD 83 NC GRID N 2011

NORTH CAROLINA STATE HWY COMM
MB Y PG 227
MB 2.5, PG 176
DB 59 PG 183
MB 129 P 89

URBAN SMART GROWTH BELVILLE, LLC
DB 2851 PG 111
DB 2851 PG 105
DB 277 PG 808

TOWN OF BELVILLE
DB 4657 P 376
MB 129 P 89
MB Y PG 227
MB 2.5, PG 176
DB 59 PG 183

BROWNING MICHELLE L
DB 1681, PG 200
PB 27, PG 62

BROWNING WILLIAM H ET
BROWNING GLENDA
DB 3604, PG 177
PB 27, PG 62

THE PANTRY INC
DB 3885, PG 787
MB 91 PG 26

BELVILLE COMMONS POA, INC
DB 3683 PG 787
MB 91 PG 26

URBAN SMART GROWTH BELVILLE, LLC
DB 2851 PG 90
DB 277 PG 452

URBAN SMART GROWTH BELVILLE, LLC
DB 2851 PG 90
MB Y PG 227

URBAN SMART GROWTH BELVILLE, LLC
DB 4062 PG 848

URBAN SMART GROWTH BELVILLE, LLC
DB 2851 PG 90
DB 277 PG 452

TOWN OF BELVILLE
DB 3858 PG 1294
MB 91 PG 26

–L– POT Sta. 9+00.00

–Y2– POT Sta. 13+97.29

–L– POT Sta. 10+00.00

215' STORAGE
150' CROWN POINT TRANSITION
156' TAPER
253' TAPER
36'
CROWN POINT
RETAIN

300' TRANSITION

BEGIN TIP PROJECT U-5914
–L– Sta. 9+88.09

BEGIN PAVING
–L– Sta. 11+14.38

REMOVE AND REPLACE 2' OF EXISTING PAVEMENT ADJACENT TO PROPOSED CURB AND GUTTER

–Y2– PT Sta. 12+61.47

BEGIN CONSTRUCTION
–Y2– Sta. 12+34.48

BEGIN SAFETY RAIL
–L– STA. 12+75.00

END SAFETY RAIL
–L– STA. 14+50.00

DO NOT DISTURB EXIST. BRICK RETAINING WALL

MATCH EXISTING EDGE OF TRAVEL

BEGIN C&G
–L– STA. 10+97.12

TIE TO BELVILLE TOWNHALL PROJECT

EST. 2 TONS CLASS B RIP RAP
EST. 8 SY GEOTEXTILE

EST. 1 TONS CLASS B RIP RAP
EST. 5 SY GEOTEXTILE

EST. 1 TON CLASS B RIP RAP
EST. 5 SY GEOTEXTILE

–Y2– PC Sta. 10+00.00

–Y2–
PI Sta 11+35.60
△ = 37° 27' 10.3" (LT)
D = 14° 19' 26.2"
L = 261.47'
T = 135.60'
R = 400.00'

RIVER ROAD (NC 133) 120' PUBLIC R/W

RIVER ROAD (NC 133) 3F BST

RIVER ROAD (NC 133) NBL S 51°08' 57.2" E

RIVER ROAD (NC 133) SBL N 53° 42' 52.2" E

VARIABLE BST 120' PUBLIC R/W

10' MULTIUSE PATH

100' PROGRESS ENERGY RIGHT-OF-WAY

MATCHLINE –L– STA. 19+50.00 SEE SHEET 05

FOR –L– PROFILE SEE SHEET 6
FOR CURB RAMP DETAILS SEE SHEET 2A-4

3/3/2023
M:\Projects\60512233-U-5914 - NC 133\900-CAD GIS\910_CAD\70_NCDOT_TIP\Roadway\Pro\U5914_Rdy_psh04.dgn
AECOM_USA_North Carolina\Documents\60512233-U-5914 - NC 133\900-CAD GIS\910_CAD\70_NCDOT_TIP\Roadway\Pro\U5914_Rdy_psh04.dgn
bentley.com@aecom.com-na-pw
Rwebb2ac

DocuSign Envelope ID: 4798B29B-01DB-4053-8970-04C8C16D261A

PROJECT REFERENCE NO.	SHEET NO.
U-5914	05
R/W SHEET NO.	

ROADWAY DESIGN ENGINEER
NORTH CAROLINA PROFESSIONAL SEAL 18470 ENGINEER EDWARD GLENN FERRIS, JR.
DocuSigned by: Edward Glenn Ferris, Jr. 5A6D1CECAFF7444...
3/28/2023

HYDRAULICS ENGINEER
NORTH CAROLINA PROFESSIONAL SEAL 037863 ENGINEER KEVIN D. BRADEN
DocuSigned by: Kevin D. Braden 8F9B83FC6...
3/28/2023

Prepared in the Office of: AECOM
NC FIRM LICENSE No: F-0342
5438 Wade Park Boulevard, Suite 200
Raleigh, NC 27607
(919) 461-1100

DOCUMENT NOT CONSIDERED FINAL UNLESS ALL SIGNATURES COMPLETED

REVISIONS 8/17/99

MATCHLINE –L– STA. 19+50.00 SEE SHEET 04

SEE SHEET 04

ADT 2019
ADT 2039 (IN HUNDREDS)

–Y1– OLD RIVER ROAD: 21/28 | 15/20 | 6/8 | 227/321 | 218/309

–L– RIVER ROAD (NC 133)

NAD 83 NC GRID NA 2011

8 NORTH CAROLINA STATE HWY COMM DB 59 PG 183 MB 2.5 PG 176 MB 129 P 89

END CONSTRUCTION –Y1– Sta. 16+36.11

BOUNDARY IS THE NORMAL HIGH WATERLINE AS ESTABLISHED BY MB 129 P89

PC Sta. 15+67.32

+44.70 –Y1– 88.50' RT

+58.26 –Y1– EX. R/W

7 TOWN OF BELVILLE DB 4657 P 376 MB 129 P 89 MB Y PG 227 MB 2.5, PG 176 DB 59 PG 183

+52.11 –Y1– EX. R/W & 70.00' RT

ALTERNATIVE GUARDRAIL POST SPACING SEE STD. 862D01

EST. 30 TONS CLASS I RIP RAP
EST. 50 SY GEOTEXTILE
END CULVERT 14+02.53

+85.11 –Y1– EX. R/W & 70.00' RT

PT Sta. 13+67.44

+06.41 –Y1– 96.73' RT & EX. R/W

6 NORTH CAROLINA STATE HWY COMM DB 59 PG 183 MB 2.5 PG 176 MB 129 P 89

BOUNDARY IS THE NORMAL HIGH WATERLINE AS ESTABLISHED BY MB 129 P89

N 24° 10' 04.3" W

BEGIN CULVERT 14+17.60

2 @ 7'x6' RCBC w/ BURIED SEE DETAIL 2

CHANNEL TIE-IN

REMOVE

5 TOWN OF BELVILLE DB 4657 P 376 MB 129 P 89 MB Y PG 227 MB 2.5, PG 176 DB 59 PG 183

4 URBAN SMART GROWTH BELVILLE, LLC DB 2851 PG 90 MB Y PG 227

SR 1554 –Y1– OLD RIVER ROAD

PC Sta. 10+82.19

TOWN OF BELVILLE DB 4657 P 376 MB 129 P 89 MB Y PG 227 MB 2.5, PG 176 DB 59 PG 183

300' TRANSITION

200' STORAGE

+87.00 88.00' LT

+74.00

EST. 48 TONS CLASS I RIP RAP
EST. 89 SY GEOTEXTILE

+40.00 EX. R/W

+52.40 EX. R/W

UTILITY CONFLICT BOX SEE SHEET 2D-1

2@54" RCP-IV

–L– RIVER ROAD (NC 133)

10' MULTIUSE PATH

2'-6" C&G

BEGIN SAFETY RAIL –L– STA. 20+75.00

+91.00 EX. R/W & 73.00' LT

66" RCP-IV BURIED 1'

+11.00 EX. R/W & 73.00' LT

+03.00 EX. R/W & 74.00' LT

END SAFETY RAIL –L– STA. 25+00.00

2 URBAN SMART GROWTH BELVILLE, LLC DB 2851 PG 90 DB 277 PG 452

–L– POT Sta. 24+55.29 = –Y1– POT Sta. 10+00.00

SPECIAL DETAIL REQUIRED FOR CB 0401, 0402, AND 0404 TO ALLOW 1.5' MIN. DEPTH RATHER THAN 1.75'.

N 75°35'57" W 109.38'

N 22°15'45.6" E

300' STORAGE

TIE TO EXISTING DITCH

SPECIAL LATERAL V DITCH SEE DETAIL 1

100' TAPER

24' TYP.

+00.00

+55.60

EIR & CAP 0.56' OUTSIDE R/W

END TIP PROJECT U-5914

–L– Sta. 29+58.46

S 51°08'57.2" E

RIVER ROAD (NC 133) 31' BST 120' PUBLIC R/W

MATCH EXIST –L–

RETAIN

BY OTHERS

–L– POT Sta. 30+00.00

+99.00 EX. R/W

SPECIAL LATERAL V DITCH SEE DETAIL 3

TIE TO EXISTING DITCH TURN LANE AND MUP BY OTHERS

+54.00 81.00' RT

300' TAPER

MONICA C. WATSON DB 829 PG 937

–Y1– STA. 14+10

DETAIL 2

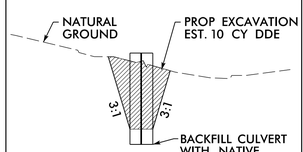

INLET CHANNEL
LOOKING DOWNSTREAM
(NOT TO SCALE)

*QTY FOR RIP RAP LIMITS ONLY.

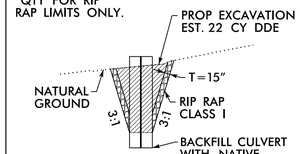

OUTLET CHANNEL
LOOKING UPSTREAM
(NOT TO SCALE)

DETAIL 1
SPECIAL LATERAL "V" DITCH
(Not to Scale)

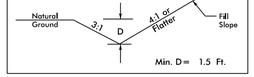

FROM –L– STA. 25+00 LT TO –L– STA. 29+50 LT

DETAIL 3
SPECIAL LATERAL "V" DITCH
(Not to Scale)

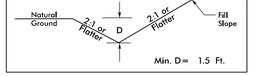

FROM –L– STA. 24+95 RT TO –L– STA. 27+50 RT

–Y1–
PI Sta 12+33.17
Δ = 46° 25' 49.9" (LT)
D = 16° 16' 38.0"
L = 285.25'
T = 150.98'
R = 352.00'
e = 4%

PI Sta 17+60.35
Δ = 11° 36' 08.8" (RT)
D = 3° 00' 56.0"
L = 384.75'
T = 193.04'
R = 1,900.00'

FOR –L– PROFILE SEE SHEET 6
FOR –Y1– PROFILE SEE SHEET 6
FOR CULVERT SEE SHEETS C1-01 TO C1-07

3/28/2023
pw:\\aecom-na-pw.bentley.com:AECOM_USA_North_Carolina\Documents\60512233-U-5914 - NC 133\900-CAD GIS\910_CAD\70_NCDOT_TIP\Roadway\Proj\U5914_Rdy_psh05.dgn
patrick.mcphersen

DocuSign Envelope ID: 60515E3E-9E62-4668-948D-618F78EBA483

PROJECT REFERENCE NO.	SHEET NO.
U-5914	06

ROADWAY DESIGN ENGINEER — NORTH CAROLINA PROFESSIONAL SEAL 18470 ENGINEER EDWARD GLENN ELLIS, JR. — 3/7/2023

HYDRAULICS ENGINEER — NORTH CAROLINA PROFESSIONAL SEAL 037863 ENGINEER JEFFREY D. BUSSEMI — 3/8/2023

Prepared in the Office of: AECOM — NC FIRM LICENSE No: F-0342, 5438 Wade Park Boulevard, Suite 200, Raleigh, NC 27607, (919) 461-1100

DOCUMENT NOT CONSIDERED FINAL UNLESS ALL SIGNATURES COMPLETED

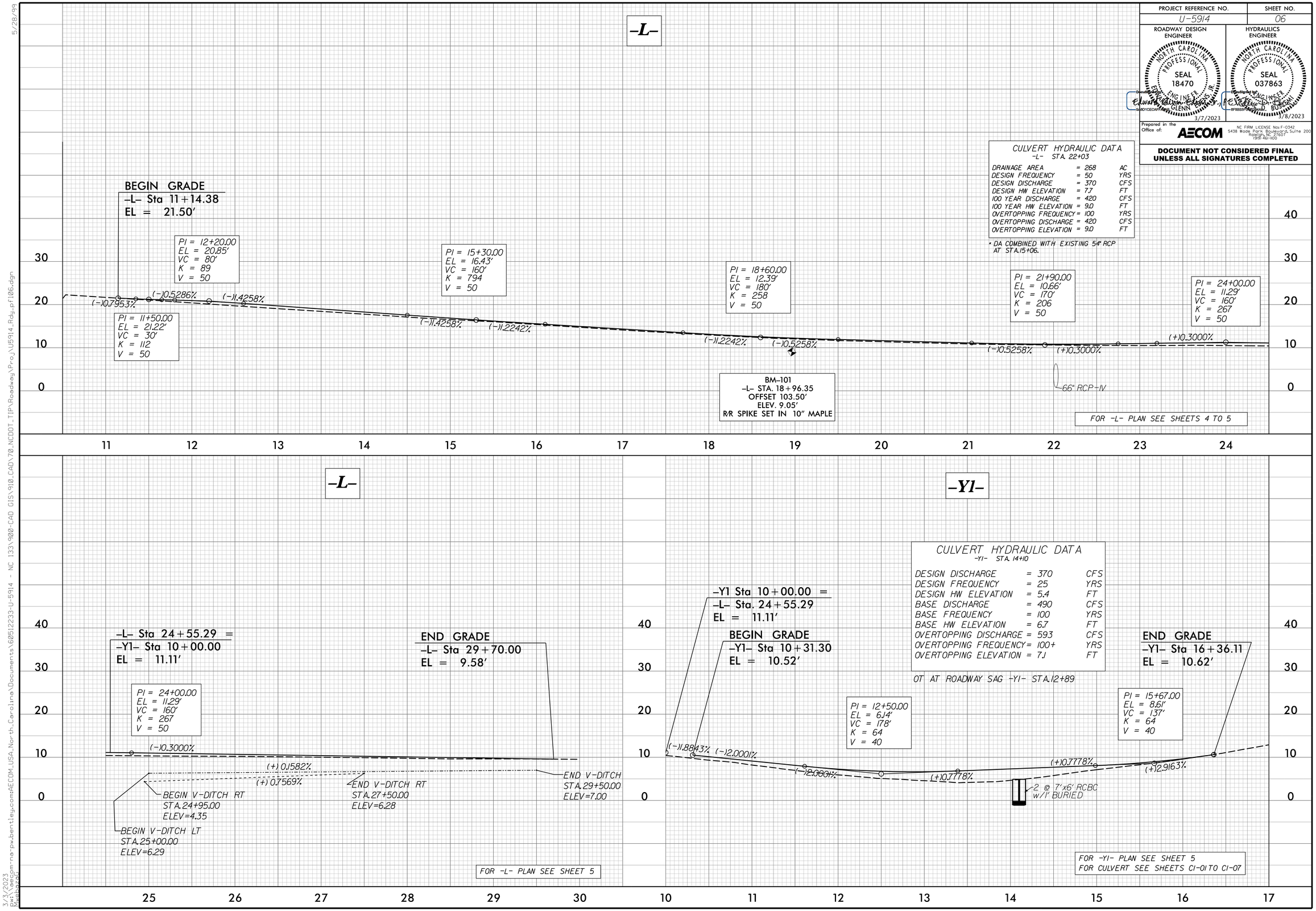

CULVERT HYDRAULIC DATA
-L- STA. 22+03

DRAINAGE AREA	= 268	AC
DESIGN FREQUENCY	= 50	YRS
DESIGN DISCHARGE	= 370	CFS
DESIGN HW ELEVATION	= 7.7	FT
100 YEAR DISCHARGE	= 420	CFS
100 YEAR HW ELEVATION	= 9.0	FT
OVERTOPPING FREQUENCY	= 100	YRS
OVERTOPPING DISCHARGE	= 420	CFS
OVERTOPPING ELEVATION	= 9.0	FT

* DA COMBINED WITH EXISTING 54" RCP AT STA.15+06.

CULVERT HYDRAULIC DATA
-Y1- STA. 14+10

DESIGN DISCHARGE	= 370	CFS
DESIGN FREQUENCY	= 25	YRS
DESIGN HW ELEVATION	= 5.4	FT
BASE DISCHARGE	= 490	CFS
BASE FREQUENCY	= 100	YRS
BASE HW ELEVATION	= 6.7	FT
OVERTOPPING DISCHARGE	= 593	CFS
OVERTOPPING FREQUENCY	= 100+	YRS
OVERTOPPING ELEVATION	= 7.1	FT

OT AT ROADWAY SAG -Y1- STA.12+89

5/28/99
3/3/2023
pw:\\aecom-na-pw.bentley.com:AECOM_USA_North_Carolina\Documents\60512233-U-5914 - NC 133\900-CAD GIS\910_CAD\70_NCDOT_TIP\Roadway\Proj\U5914_Rdy_pf106.dgn

STATE	STATE PROJECT REFERENCE NO.	SHEET NO.	TOTAL SHEETS
N.C.	U-5914	RW01	6

STATE OF NORTH CAROLINA
DIVISION OF HIGHWAYS

SURVEY CONTROL, EXISTING CENTERLINES, RIGHT OF WAY, EASEMENTS AND PROPERTY TIES

BRUNSWICK COUNTY

LOCATION: NC 133 FROM US 17/74/76 TO SR 1554(OLD RIVER RD.)

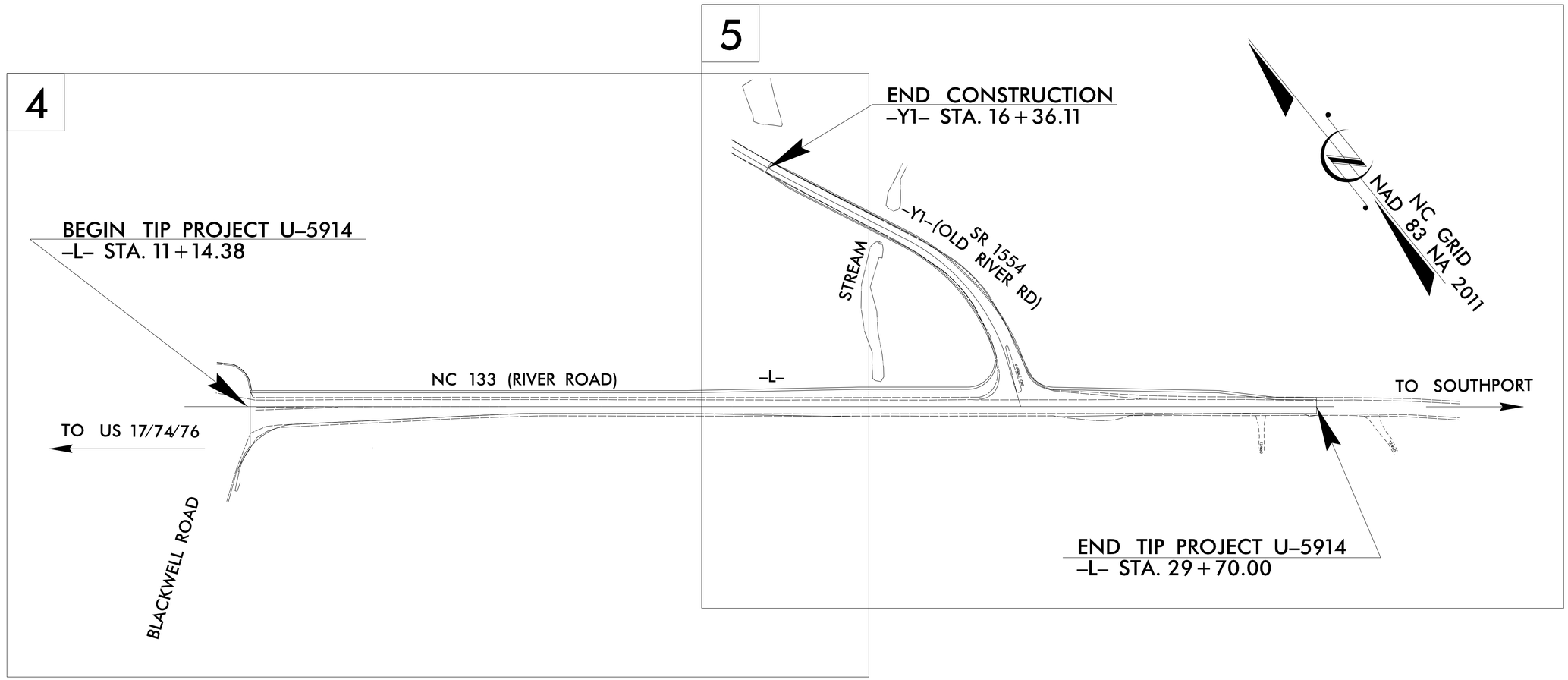

TIP PROJECT: U5914

09/08/99

18-JAN-2022 15:53
S:\Units\Div03\Projects\URBAN\Brunswick Co\U5914\Working\controlsheets\211130 REVISED CONTROL SHEETS\U5914_ls_rw01.dgn
mjduval AT LS-299896

GRAPHIC SCALE

50 25 0 50 100

PLANS

DATUM DESCRIPTION

THE LOCALIZED COORDINATE SYSTEM DEVELOPED FOR THIS PROJECT IS BASED ON THE STATE PLANE COORDINATES ESTABLISHED BY NCGS FOR MONUMENT "MCDONALDS" WITH NAD 83/NA 2011 STATE PLANE GRID COORDINATES OF NORTHING: 162,378.787(ft) EASTING: 2,322,247.834(ft) ELEVATION: 43.32(ft)
THE AVERAGE COMBINED GRID FACTOR USED ON THIS PROJECT (GROUND TO GRID) IS: 1.000046352
THE N.C. LAMBERT GRID BEARING AND LOCALIZED HORIZONTAL GROUND DISTANCE FROM "MCDONALDS" TO -L- STATION 10+00.00 IS N 51-05'02.82" W 22,283.93(ft)
ALL LINEAR DIMENSIONS ARE LOCALIZED HORIZONTAL DISTANCES
VERTICAL DATUM USED IS NAVD 88 GEOID G12NC

Prepared in the Office of:

LOCATION & SURVEYS
DIVISION 3
5310 BARBADOS BLVD. #102
CASTLE HAYNE, NC 28429
(910) 341-2280

2018 STANDARD SPECIFICATIONS

RIGHT OF WAY DATE:	***LETTING DATE:***
SEPTEMBER 26, 2019	***JUNE 2, 2022***

PROFESSIONAL LAND SURVEYOR

NORTH CAROLINA PROFESSIONAL SEAL L-4526 LAND SURVEYOR CHRISTOPHER J. SAWYER

DocuSigned by:
01/19/2022
SIGNATURE: Date:

STATE OF NORTH CAROLINA DEPARTMENT OF TRANSPORTATION

6/2/99

SURVEY CONTROL SHEET

W/ EXISTING CENTERLINE ALIGNMENTS PRIOR TO CONSTRUCTION

PROJECT REFERENCE NO.	SHEET NO.
U-5914	RW02C-1

Location and Surveys

LOCATION & SURVEYS
DIVISION 3
5310 BARBADOS BLVD. #102
CASTLE HAYNE, NC 28429
(910) 341-2280

PROJECT SURVEYOR

NORTH CAROLINA PROFESSIONAL LAND SURVEYOR SEAL L-4526 CHRISTOPHER J. SAWYER

DOCUMENT NOT CONSIDERED FINAL UNLESS ALL SIGNATURES COMPLETED

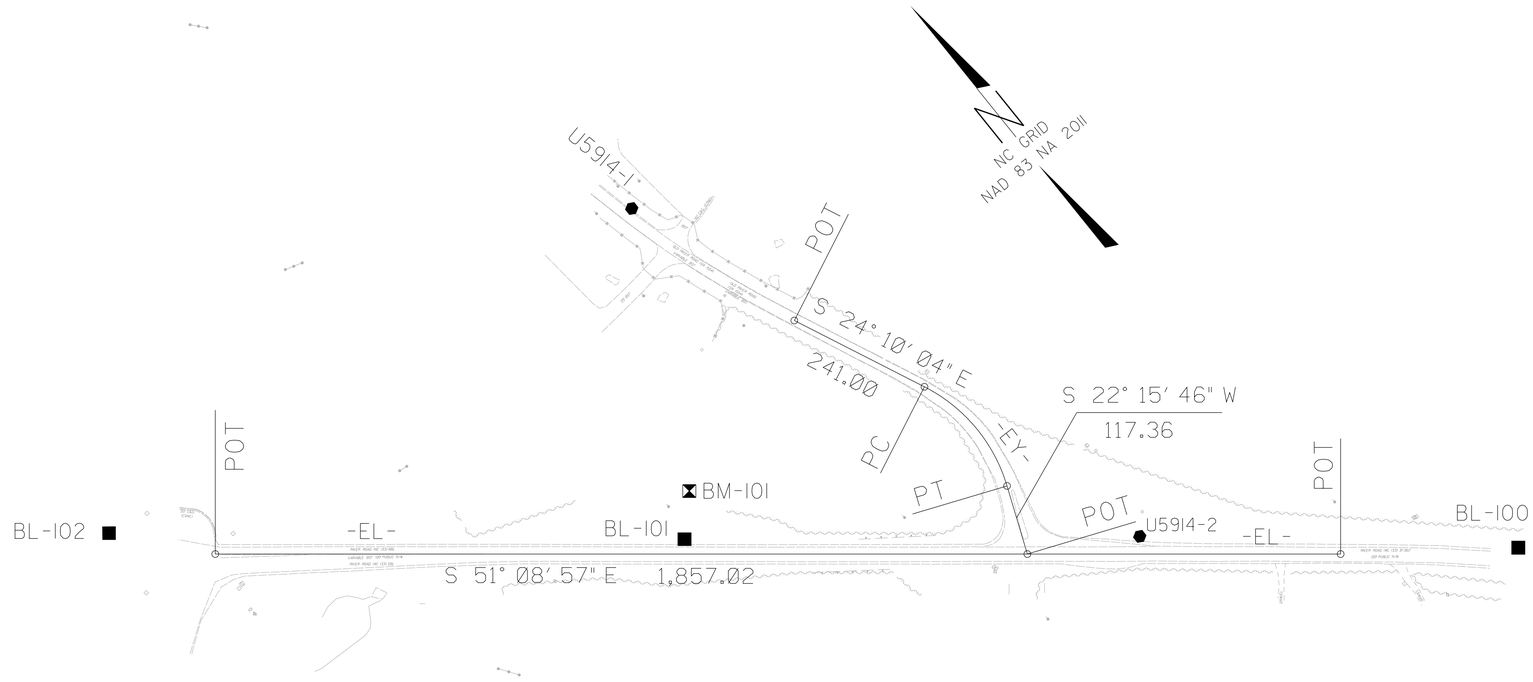

EL

POINT	N	E	BEARING	DIST
POT	176304.786	2304999.149		
LINE			S 51°08'57.2" E	1857.02
POT	175139.890	2306445.362		

EY

POINT	N	E	BEARING	DIST	DELTA	D	L	T	R
POT	176005.500	2305985.010							
LINE			S 24°10'04.3" E	241.00					
PC	175785.622	2306083.679							
CURVE			S 00°57'09.4" E	212.86	46°25'49.9"(RT)	21°13'14.4"	218.80	115.81	270.00
PT	175572.791	2306087.218							
LINE			S 22°15'45.6" W	117.36					
POT	175464.181	2306042.757							

I, CHRISTOPHER J. SAWYER, PLS, certify that the Project Control was [performed/verified] under my supervision from an actual GPS survey made under my supervision and the following information was used to perform the survey:

Class of survey: ***AA***
Type of GPS field procedure: NC-VRS-RTN
Dates of survey: June 2016 to July 2016
Datum/Epoch:NAD 83/NA 2011
Published/Fixed-control use: Project Control N/A for RTN
Localized around: "MCDONALDS"
Northing: 162378.787
Easting: 2322247.834
Combined grid factor: 1.000046352
Geoid model: G12NC
Units: US Survey Feet

I also certify that the Baseline Control for this project was completed under my direct and responsible charge from an actual survey made under my supervision; that all horizontal closures had a minimum ratio of precision of 1:20,000 (Class AA) and Vertical accuracy to Class A. Field work was performed from June 2016 to July 2016 , and all coordinates are based on NAD 83/2011 and all elevations are based on NAVD 88; that this survey was performed to meet the requirements of 21NCAC 56.1600 as applicable.

This 18th day of January, 2022.

DocuSigned by:
Christopher J. Sawyer
9700C82E1021467...
Professional Land Surveyor L-4526

BL

POINT	DESC.	NORTH	EAST	ELEVATION
BL-102	TRV MAG NAIL	176441.5265	2304884.2410	23.47
BL-101	TRV CAP & REBAR	175838.2732	2305617.5100	10.56
U59142	GPS CAP & REBAR	175370.5610	2306205.5350	8.53
BL-100	TRV CAP & REBAR	174964.2456	2306680.6000	9.34

BY

POINT	DESC.	NORTH	EAST	ELEVATION
U5914-1	GPS CAP & REBAR	176317.6830	2305891.9970	18.14
U5914-2	GPS CAP & REBAR	175370.5610	2306205.5350	8.53

***

PROPOSED ALIGNMENT CONTROL SHEET

PROJECT REFERENCE NO.	SHEET NO.
U-5914	RW02D-1

Location and Surveys

LOCATION AND SURVEYS
DIVISION 3
5310 BARBADOS BLVD. #102
CASTLE HAYNE, NC 28429
(910) 341-2280

PROJECT SURVEYOR

NORTH CAROLINA PROFESSIONAL SEAL L-4526 LAND SURVEYOR CHRISTOPHER J. SAWYER

DOCUMENT NOT CONSIDERED FINAL UNLESS ALL SIGNATURES COMPLETED

I, CHRISTOPHER J. SAWYER, PLS, certify that the data compiled came from available surveys/mapping performed by others and provided to me by NCDOT and do not certify to the accuracy or quality of the individual data sources.

This 18th day of January, 2022.

DocuSigned by:
9700CB2E1D21407...

Professional Land Surveyor L-4526

L

POINT	N	E	BEARING	DIST	DELTA	D	L	T	R
POT	176377.077	2304909.401							
LINE			S 51°08'57.2" E	2004.74					
PC	175119.514	2306470.658							
CURVE			S 49°39'29.2" E	156.13	02°58'56.0"(RT)	01°54'35.5"	156.15	78.09	3000.00
PT	175018.443	2306589.661							
LINE			S 48°10'01.2" E	58.22					
POT	174979.612	2306633.040							

Y1

POINT	N	E	BEARING	DIST	DELTA	D	L	T	R
POT	175464.181	2306042.757							
LINE			N 22°15'45.6" E	82.19					
PC	175540.241	2306073.893							
CURVE			N 00°57'09.4" W	277.51	46°25'49.9"(LT)	16°16'38.0"	285.25	150.98	352.00
PT	175817.710	2306069.280							
LINE			N 24°10'04.3" W	199.88					
PC	176000.074	2305987.445							
CURVE			N 18°21'59.9" W	384.10	11°36'08.8"(RT)	03°00'56.0"	384.75	193.04	1900.00
PT	176364.603	2305866.418							
LINE			N 12°33'55.5" W	2.87					
POT	176367.405	2305865.794							

NOTES:

1. PROJECT CONTROL WAS ESTABLISHED USING GNSS, THE GLOBAL NAVIGATION SATELLITE SYSTEM.

2. THE PROPOSED ALIGNMENT CONTROL DATA FOR THIS PROJECT HAS BEEN COMPILED FROM VARIOUS SOURCES. IF FURTHER INFORMATION REGARDING PROJECT CONTROL IS NEEDED, PLEASE CONTACT THE LOCATION AND SURVEYS UNIT.

REVISIONS

6/2/99

18-JAN-2022 16:29
S:\Units\Div03\Projects\URBAN\Brunswick Co\U5914\Working\control sheets\211130 REVISED CONTROL SHEETS\U5914_LS_rw02d-1.dgn
mjduval AT LS-299896

RIGHT OF WAY CONTROL SHEET

PROJECT REFERENCE NO.	SHEET NO.
U-5914	RW02E-1

Location and Surveys

LOCATION & SURVEYS
DIVISION 3
5310 BARBADOS BLVD. #102
CASTLE HAYNE, NC 28429
(910) 341-2280

PROJECT SURVEYOR

NORTH CAROLINA PROFESSIONAL SEAL L-4526 LAND SURVEYOR CHRISTOPHER J. SAWYER

DOCUMENT NOT CONSIDERED FINAL UNLESS ALL SIGNATURES COMPLETED

ROW MARKER IRON PIN AND CAP-E

ALIGN	STATION	OFFSET	NORTH	EAST
L	21+40.00	-58.36	175707.41306	2305833.82343
L	21+87.00	-88.00	175701.01135	2305889.01759
L	22+52.40	-88.00	175659.98400	2305939.95284

ROW MARKER PERMANENT EASEMENT-E

ALIGN	STATION	OFFSET	NORTH	EAST	
L	15+94.00	61.69	175956.42062	2305333.29978	
L	15+94.00	72.00	175948.39161	2305326.83256	
L	16+11.00	72.00	175937.72761	2305340.07186	
L	16+11.00	61.70	175945.75028	2305346.53397	
L	17+72.00	69.00	175839.06959	2305467.33771	
L	17+72.00	61.78	175844.69579	2305471.86951	
L	17+92.00	61.79	175832.14244	2305487.43914	
L	17+92.00	69.00	175826.52371	2305482.91336	
L	21+91.00	73.00	175573.11821	2305791.13836	NOT SET
L	21+91.00	61.98	175581.70308	2305798.05331	
L	22+11.00	61.99	175569.14973	2305813.62294	NOT SET
L	22+11.00	73.00	175560.57233	2305806.71401	
L	24+03.00	74.00	175439.35306	2305955.61294	
L	24+03.00	62.08	175448.63755	2305963.09141	NOT SET
L	25+99.00	62.17	175325.61471	2306115.67381	

ROW MARKER PERMANENT EASEMENT-E

ALIGN	STATION	OFFSET	NORTH	EAST
Y1	13+06.41	34.10	175768.5379	2306122.3808
Y1	13+06.41	96.73	175783.9367	2306183.0818
Y1	13+85.11	70.00	175862.4923	2306125.9091
Y1	13+85.11	29.10	175845.7487	2306088.5970
Y1	14+52.11	29.91	175907.2056	2306061.9005
Y1	14+52.11	70.00	175923.6197	2306098.4785
Y1	16+44.70	88.50	176104.2147	2306039.3590
Y1	16+58.26	29.85	176094.8030	2305979.9973

I , CHRISTOPHER J. SAWYER , certify that the right of way and permanent easement monumentation for this project shown herein was completed under my direct and responsible charge from an actual survey made under my supervision; that all horizontal closures had a minimum ratio of precision of 1:10,000 (Class A). Field work was performed from July 2021 to August 2021, and all coordinates are based on NAD83/2011; That this survey was performed to meet the requirements of 21NCAC 56.1600 as applicable.

This 18th day of January, 2022.

DocuSigned by:
Christopher J. Sawyer
97DCB2E1D21487...

Professional Land Surveyor L-4526

NOTES:

1. IF FURTHER INFORMATION REGARDING PROJECT CONTROL IS NEEDED PLEASE CONTACT THE LOCATION AND SURVEYS UNIT.

2. PROJECT CONTROL WAS ESTABLISHED USING GNSS, THE GLOBAL NAVIGATION SATELLITE SYSTEM.

REVISIONS

6/2/99

18-JAN-2022 16:32
S:\Units\Div03\Projects\URBAN\Brunswick Co\U5914\Working\control sheets\211130 REVISED CONTROL SHEETS\U5914_ls_rw02e-1.dgn
mjduval AT LS-299896

PROJECT REFERENCE NO.	SHEET NO.
U-5914	RW04

Location and Surveys

LOCATION & SURVEYS
DIVISION 3
5310 BARBADOS BLVD. #102
CASTLE HAYNE, NC 28429
(910) 341-2280

PROJECT SURVEYOR

NORTH CAROLINA PROFESSIONAL SEAL L-4526 LAND SURVEYOR CHRISTOPHER J. SAWYER

DOCUMENT NOT CONSIDERED FINAL UNLESS ALL SIGNATURES COMPLETED

I , CHRISTOPHER J. SAWYER , certify that the right of way and permanent easement monumentation for this project shown herein was completed under my direct and responsible charge from an actual survey made under my supervision; that all horizontal closures had a minimum ratio of precision of 1:10,000 (Class A). Field work was performed from July 2021 to August 2021, and all coordinates are based on NAD83/2011; That this survey was performed to meet the requirements of 21NCAC 56.1600 as applicable.

This 18th day of January, 2022.

DocuSigned by:

Professional Land Surveyor L-4526

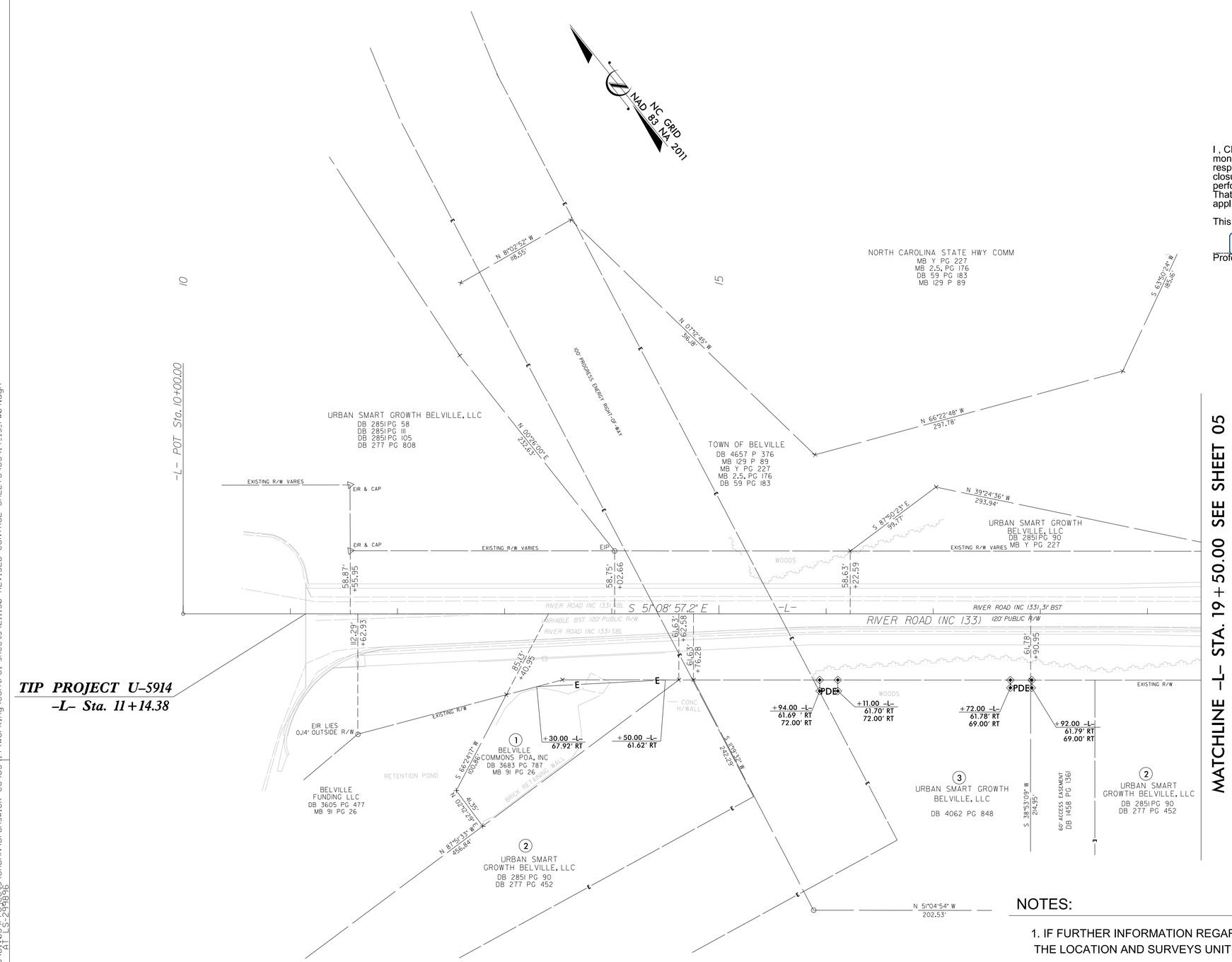

TIP PROJECT U-5914
-L- Sta. 11+14.38

MATCHLINE -L- STA. 19+50.00 SEE SHEET 05

NOTES:

1. IF FURTHER INFORMATION REGARDING PROJECT CONTROL IS NEEDED PLEASE CONTACT THE LOCATION AND SURVEYS UNIT.

2. PROJECT CONTROL WAS ESTABLISHED USING GNSS, THE GLOBAL NAVIGATION SATELLITE SYSTEM.

REVISIONS

6/2/99

18-JAN-2022 16:51
S:\Units\Div03\Projects\URBAN\Brunswick Co\U5914\Working\control sheets\211130 REVISED CONTROL SHEETS\U5914_ls_rw04.dgn
mjduval AT LS-299896

6/2/99

REVISIONS

PROJECT REFERENCE NO.	SHEET NO.
U-5914	RW05

Location and Surveys

LOCATION & SURVEYS
DIVISION 3
5310 BARBADOS BLVD. #102
CASTLE HAYNE, NC 28429
(910) 341-2280

PROJECT SURVEYOR

NORTH CAROLINA PROFESSIONAL SEAL L-4526 LAND SURVEYOR CHRISTOPHER J. SAWYER

DOCUMENT NOT CONSIDERED FINAL UNLESS ALL SIGNATURES COMPLETED

I , CHRISTOPHER J. SAWYER , certify that the right of way and permanent easement monumentation for this project shown herein was completed under my direct and responsible charge from an actual survey made under my supervision; that all horizontal closures had a minimum ratio of precision of 1:10,000 (Class A). Field work was performed from July 2021 to August 2021, and all coordinates are based on NAD83/2011; That this survey was performed to meet the requirements of 21NCAC 56.1600 as applicable.

This 18th day of January, 2022.

DocuSigned by:
Christopher Sawyer
6700C0F9F1D21407...

Professional Land Surveyor L-4526

NAD 83 NC GRID NA 2011

NORTH CAROLINA STATE HWY COMM
DB 59 PG 183
MB 2.5 PG 176
MB 129 P 89

BOUNDARY IS THE NORMAL HIGH WATERLINE AS ESTABLISHED BY MB 129 P89

END CONSTRUCTION
-Y1- Sta. 16+36.11

PC Sta. 15+67.32

PT Sta. 13+67.44

N 24° 10' 04.3" W

+58.26 -Y1- 29.85' RT
+44.70 -Y1- 88.50' RT
+52.11 -Y1- 29.91' RT 70.00' RT
+85.11 -Y1- 29.10' RT 70.00' RT
+06.41 -Y1- 34.10' RT 96.73' RT

PUE

OLD RIVER ROAD
VARIABLE WIDTH

CONC RW MON

EIP

WOODS

EXISTING R/W VARIES

SR 1554 -Y1- OLD RIVER ROAD

MARSH

VARIABLE CMP

CONC HEADWALL

GRAVEL

TOWN OF BELVILLE
DB 4657 P 376
MB 129 P 89
MB Y PG 227
MB 2.5, PG 176
DB 59 PG 183

URBAN SMART GROWTH BELVILLE, LLC
DB 2851 PG 90
MB Y PG 227

URBAN SMART GROWTH BELVILLE, LLC
DB 2851PG 90
DB 277 PG 452

MONICA C. WATSON
DB 829 PG 937

-Y1-

PI Sta 12+33.17	PI Sta 17+60.35
△ = 46° 25' 49.9" (LT)	△ = 11° 36' 08.8" (RT)
D = 16° 16' 38.0"	D = 3° 00' 56.0"
L = 285.25'	L = 384.75'
T = 150.98'	T = 193.04'
R = 352.00'	R = 1,900.00'
e = 4%	

PC Sta. 10+82.19
N 22° 15' 45.6" E

S 51° 08' 57.2" E

-L- RIVER ROAD (NC 133)

RIVER ROAD (NC 133) 31' BST
120' PUBLIC R/W

EIR & CAP
0.56' OUTSIDE R/W

EXISTING R/W

CONC RW MON

+87.00 -L- 88.00' LT
+40.00 -L- 58.36' LT
+52.40 -L- 88.00' LT
+40.00 -L- 61.95' RT
+91.00 -L- 61.98' RT 73.00' RT
+11.00 -L- 61.99' RT 73.00' RT
+03.00 -L- 62.08' RT 74.00' RT
+99.00 -L- 62.17' RT
+54.00 -L- 81.00' RT

-L- POT Sta.24+55.29 =
-Y1- POT Sta. 10+00.00

-L- POT Sta. 30+00.00

END TIP PROJECT U-5914
-L- Sta. 29+70.00

MATCHLINE -L- STA. 19+50.00 SEE SHEET 04

NOTES:

1. IF FURTHER INFORMATION REGARDING PROJECT CONTROL IS NEEDED PLEASE CONTACT THE LOCATION AND SURVEYS UNIT.

2. PROJECT CONTROL WAS ESTABLISHED USING GNSS, THE GLOBAL NAVIGATION SATELLITE SYSTEM.

18-JAN-2022 13:04
S:\Units\Projects\URBAN\Brunswick Co\U5914\Working\control sheets\211130 REVISED CONTROL SHEETS\u5914_ls_rw05.dgn
mjohnson (Autodesk)

DocuSign Envelope ID: DA8FCAD3-4D78-49CE-91F9-09622D5D506A

STATE OF NORTH CAROLINA
DIVISION OF HIGHWAYS

TRANSPORTATION MANAGEMENT PLAN

BRUNSWICK COUNTY

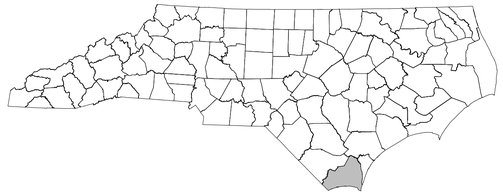

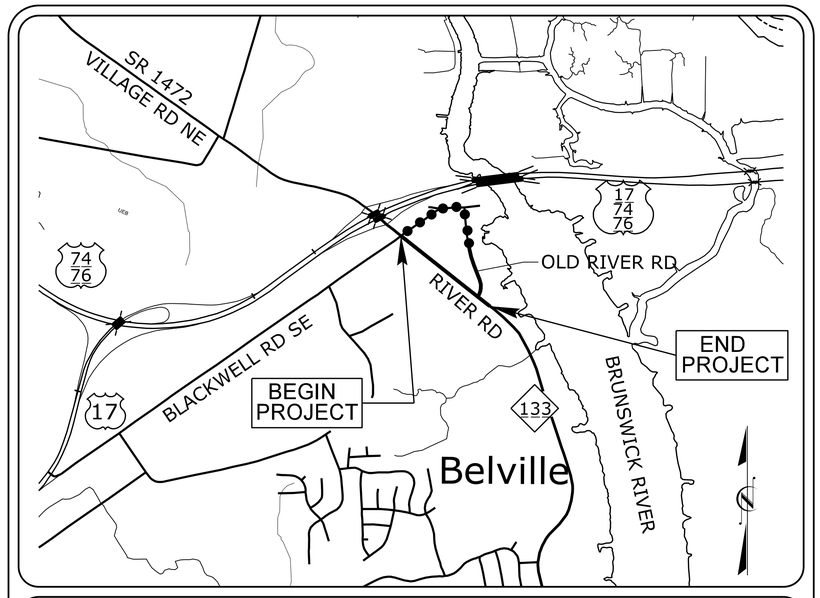

VICINITY MAP

NOT TO SCALE ●●● *DETOUR*

INDEX OF SHEETS

SHEET NO.	TITLE
TMP-1	TITLE SHEET, VICINITY MAP, AND INDEX OF SHEETS
TMP-1A	LIST OF APPLICABLE ROADWAY STANDARD DRAWINGS, AND LEGEND
TMP-1B	TRANSPORTATION OPERATIONS PLAN: (GENERAL NOTES, LOCAL NOTES)
TMP-1C	PROJECT PHASING
TMP-1D	SPECIAL SIGN DESIGN - OLD RIVER ROAD
TMP-02	TEMPORARY TRAFFIC CONTROL PHASE I DETAIL
TMP-03	TEMPORARY TRAFFIC CONTROL PHASE II DETAIL
TMP-04	TEMPORARY TRAFFIC CONTROL PHASE III DETAIL

SHEET NO.
TMP-1

U-5914

TIP PROJECT:



WORK ZONE SAFETY & MOBILITY
"from the MOUNTAINS to the COAST"

PLANS PREPARED BY:

JEFFREY KOONTZ, P.E.

PATRICK MCPHERSON, E.I.

NCDOT CONTACTS:

ERIC C. MURRAY
PROJECT ENGINEER

DIVISION OF HIGHWAYS · STATE OF NORTH CAROLINA · DEPARTMENT OF TRANSPORTATION · WORK ZONE TRAFFIC CONTROL

DOCUMENT NOT CONSIDERED FINAL UNLESS ALL SIGNATURES COMPLETED

AECOM
NC FIRM LICENSE No: F-0342
701 Corporate Center Drive, Suite 475
Raleigh, NC 27607
(919) 854-6200 - (919) 854-6259(FAX)

APPROVED: _____

DATE: _____

NORTH CAROLINA PROFESSIONAL ENGINEER SEAL 018122

3/7/2023

3/7/2023
pw:\\2ecom-na-pw.bentley.com:AECOM_USA_North_Carolina\Documents\60512233-U-5914 - NC 133\900-CAD GIS\910_CAD\70_NCDOT_TIP\Traffic\TrafficControl\TCP\U5914_TC_TMP_tsh.dgn
patrick.mcpherson

DocuSign Envelope ID: DA8FCAD3-4D78-49CE-91F9-09622D5D506A

PROJ. REFERENCE NO.	SHEET NO.
U-5914	TMP-1A

ROADWAY STANDARD DRAWINGS

THE FOLLOWING ROADWAY STANDARDS AS SHOWN IN "ROADWAY STANDARD DRAWINGS" - N.C. DEPARTMENT OF TRANSPORTATION - RALEIGH, N.C., DATED JANUARY 2018 ARE APPLICABLE TO THIS PROJECT AND BY REFERENCE HEREBY ARE CONSIDERED A PART OF THESE PLANS:

STD. NO.	TITLE
1101.01	WORK ZONE WARNING SIGNS
1101.02	TEMPORARY LANE CLOSURES
1101.03	TEMPORARY ROAD CLOSURES
1101.11	TRAFFIC CONTROL DESIGN TABLES
1110.01	STATIONARY WORK ZONE SIGNS
1110.02	PORTABLE WORK ZONE SIGNS
1115.01	FLASHING ARROW BOARDS
1130.01	DRUMS
1135.01	CONES
1145.01	BARRICADES
1150.01	FLAGGERS
1180.01	SKINNY DRUMS
1205.01	PAVEMENT MARKINGS - LINE TYPES AND OFFSETS
1205.02	PAVEMENT MARKINGS - TWO LANE AND MULTILANE ROADWAYS
1205.04	PAVEMENT MARKINGS - INTERSECTIONS
1205.05	PAVEMENT MARKINGS - TURN LANES
1205.08	PAVEMENT MARKINGS - SYMBOLS AND WORD MESSAGES
1205.09	PAINTED ISLANDS
1250.01	RAISED PAVEMENT MARKERS - INSTALLATION SPACING
1251.01	RAISED PAVEMENT MARKERS - (PERMANENT AND TEMPORARY)

LEGEND

GENERAL

- DIRECTION OF TRAFFIC FLOW
- DIRECTION OF PEDESTRIAN TRAFFIC FLOW
- EXIST. PVMT.
- NORTH ARROW
- PROPOSED PVMT.
- TEMP. SHORING (LOCATION PURPOSES ONLY)
- WORK AREA
- REMOVAL

SIGNALS

EXISTING PROPOSED TEMPORARY (TEMP)

PAVEMENT MARKINGS

- EXISTING LINES
- TEMPORARY LINES
- TEMPORARY LINES
- TEMPORARY LINES

TRAFFIC CONTROL DEVICES

- BARRICADE (TYPE III)
- CONE
- DRUM / SKINNY DRUM / TUBULAR MARKER
- TEMPORARY CRASH CUSHION
- FLASHING ARROW BOARD
- FLAGGER
- LAW ENFORCEMENT
- TRUCK MOUNTED ATTENUATOR (TMA)
- CHANGEABLE MESSAGE SIGN

TEMPORARY SIGNING

- PORTABLE SIGN
- STATIONARY SIGN
- STATIONARY OR PORTABLE SIGN

PAVEMENT MARKERS

- CRYSTAL/CRYSTAL
- CRYSTAL/RED
- YELLOW/YELLOW

PAVEMENT MARKING SYMBOLS

PAVEMENT MARKING SYMBOLS

TEMPORARY PAVEMENT MARKING INDEX

P1	WHITE EDGELINE (4")
P2	WHITE SOLID LANE LINE (4")
P5	2 FT. - 6 FT./SP WHITE MINISKIP (4")
P11	YELLOW SINGLE CENTER (4")
P13	YELLOW DOUBLE CENTER (4")
P42	YELLOW DIAGONAL (8")
P61	WHITE STOPBAR (24")
P70	LEFT TURN ARROW
P72	STRAIGHT ARROW

APPROVED: _____

DATE: _____

NORTH CAROLINA PROFESSIONAL SEAL 018122 ENGINEER JEFFREY A. KRONIT

Docusigned by: Jeffrey A. Kronit B4EBFECC0B6E4...

3/7/2023

DOCUMENT NOT CONSIDERED FINAL UNLESS ALL SIGNATURES COMPLETED

DIVISION OF HIGHWAYS · STATE OF NORTH CAROLINA · DEPARTMENT OF TRANSPORTATION · WORK ZONE TRAFFIC CONTROL

ROADWAY STANDARD DRAWINGS & LEGEND

2/20/2023
pw:\\aecom-na-pw.bentley.com:AECOM_USA_North_Carolina\Documents\60512233-U-5914 - NC 133\900-CAD GIS\910_CAD\70_NCDOT_TIP\Traffic\TrafficControl\TCP\U5914_TC_TMP_notes.dgn
patrick.mcpherson

DocuSign Envelope ID: DA8FCAD3-4D78-49CE-91F9-09622D5D506A

PROJ. REFERENCE NO.	SHEET NO.
U-5914	TMP-1B

GENERAL NOTES

CHANGES MAY BE REQUIRED WHEN PHYSICAL DIMENSIONS IN THE DETAIL DRAWINGS, STANDARD DETAILS, AND ROADWAY DETAILS ARE NOT ATTAINABLE TO MEET FIELD CONDITIONS OR RESULT IN DUPLICATE OR UNDESIRED OVERLAPPING OF DEVICES. MODIFICATION MAY INCLUDE: MOVING, SUPPLEMENTING, COVERING, OR REMOVAL OF DEVICES AS DIRECTED BY THE ENGINEER.

THE FOLLOWING GENERAL NOTES APPLY AT ALL TIMES FOR THE DURATION OF THE CONSTRUCTION PROJECT EXCEPT WHEN OTHERWISE NOTED IN THE PLAN OR DIRECTED BY THE ENGINEER.

TIME RESTRICTIONS - REQUIRES INTERMEDIATE CONTRACT TIME PROJECT SPECIAL PROVISIONS

A) DO NOT CLOSE OR NARROW TRAVEL LANES AS FOLLOWS:

ROAD NAME	DAY AND TIME RESTRICTIONS
NC 133 RIVER ROAD	MONDAY-FRIDAY 6:00 AM-9:00AM & 4:00 PM-6:00 PM
BLACKWELL ROAD	MONDAY-FRIDAY 7:00 AM-9:00AM & 4:00 PM-6:00 PM

B) DO NOT CLOSE OR NARROW TRAVEL LANES DURING HOLIDAYS AND SPECIAL EVENTS AS FOLLOWS:

ROAD NAME

NC 133 RIVER ROAD
BLACKWELL ROAD

HOLIDAY

1. FOR ANY UNEXPECTED OCCURRENCE THAT CREATES UNUSUALLY HIGH TRAFFIC VOLUMES, AS DIRECTED BY THE ENGINEER.
2. FOR NEW YEAR'S, BETWEEN THE HOURS OF 6:00 A.M. DECEMBER 31st TO 6:00 P.M. JANUARY 2ND. IF NEW YEAR'S DAY IS ON A FRIDAY, SATURDAY, SUNDAY, OR MONDAY THEN UNTIL 6:00 P.M. THE FOLLOWING TUESDAY.
3. FOR EASTER, BETWEEN THE HOURS OF 6:00 A.M. THURSDAY AND 6:00 P.M. MONDAY.
4. FOR MEMORIAL DAY, BETWEEN THE HOURS OF 6:00 A.M. FRIDAY TO 6:00 P.M. TUESDAY.
5. FOR INDEPENDENCE DAY, BETWEEN THE HOURS OF 6:00 A.M. THE DAY BEFORE INDEPENDENCE DAY AND 6:00 P.M. THE DAY AFTER INDEPENDENCE DAY.

   IF INDEPENDENCE DAY IS ON A FRIDAY, SATURDAY, SUNDAY OR MONDAY THEN BETWEEN THE HOURS OF 6:00 A.M. THE THURSDAY BEFORE INDEPENDENCE DAY AND 6:00 P.M. THE TUESDAY AFTER INDEPENDENCE DAY.
6. FOR LABOR DAY, BETWEEN THE HOURS OF 6:00 A.M. FRIDAY AND 6:00 P.M. TUESDAY.
7. FOR THANKSGIVING DAY, BETWEEN THE HOURS OF 6:00 A.M. TUESDAY TO 6:00 P.M. MONDAY.
8. FOR CHRISTMAS, BETWEEN THE HOURS OF 6:00 A.M. THE FRIDAY BEFORE THE WEEK OF CHRISTMAS DAY AND 6:00 P.M. THE FOLLOWING TUESDAY AFTER THE WEEK OF CHRISTMAS.

C) DO NOT STOP TRAFFIC AS FOLLOWS:

ROAD NAME	DAY AND TIME RESTRICTIONS	DURATION AND OPERATION
NC 133	MON-FRI 6A-9A & 4 PM-7 PM	15 MIN PAVEMENT MARKING 15 MIN SIGNAL MODIFICATION

D) DO NOT CONDUCT ANY HAULING OPERATIONS AGAINST THE FLOW OF TRAFFIC OF AN OPEN TRAVELWAY UNLESS THE HAULING OPERATION IS PROTECTED BY BARRIER OR GUARDRAIL OR AS DIRECTED BY THE ENGINEER.

LANE AND SHOULDER CLOSURE REQUIREMENTS

E) REMOVE LANE CLOSURE DEVICES FROM THE LANE WHEN WORK IS NOT BEING PERFORMED BEHIND THE LANE CLOSURE OR WHEN A LANE CLOSURE IS NO LONGER NEEDED OR AS DIRECTED BY THE ENGINEER.

F) WHEN PERSONNEL AND/OR EQUIPMENT ARE WORKING WITHIN 15 FT OF AN OPEN TRAVEL LANE, CLOSE THE NEAREST OPEN SHOULDER USING ROADWAY STANDARD DRAWING NO. 1101.04 UNLESS THE WORK AREA IS PROTECTED BY BARRIER OR GUARDRAIL OR A LANE CLOSURE IS INSTALLED.

G) WHEN PERSONNEL AND/OR EQUIPMENT ARE WORKING ON THE SHOULDER ADJACENT TO AN UNDIVIDED FACILITY AND WITHIN 5 FT OF AN OPEN TRAVEL LANE, CLOSE THE NEAREST OPEN TRAVEL LANE USING ROADWAY STANDARD DRAWING NO. 1101.02 UNLESS THE WORK AREA IS PROTECTED BY BARRIER OR GUARDRAIL.

WHEN PERSONNEL AND/OR EQUIPMENT ARE WORKING ON THE SHOULDER ADJACENT TO A DIVIDED FACILITY AND WITHIN 10 FT OF AN OPEN TRAVEL LANE, CLOSE THE NEAREST OPEN TRAVEL LANE USING ROADWAY STANDARD DRAWING NO. 1101.02 UNLESS THE WORK AREA IS PROTECTED BY BARRIER OR GUARDRAIL.

H) WHEN PERSONNEL AND/OR EQUIPMENT ARE WORKING WITHIN A LANE OF TRAVEL OF AN UNDIVIDED OR DIVIDED FACILITY, CLOSE THE LANE ACCORDING TO THE TRAFFIC CONTROL PLANS, ROADWAY STANDARD DRAWINGS, OR AS DIRECTED BY THE ENGINEER. CONDUCT THE WORK SO THAT ALL PERSONNEL AND/OR EQUIPMENT REMAIN WITHIN THE CLOSED TRAVEL LANE.

I) DO NOT WORK SIMULTANEOUSLY WITHIN 15 FT ON BOTH SIDES OF AN OPEN TRAVELWAY, RAMP, OR LOOP WITHIN THE SAME LOCATION UNLESS PROTECTED WITH GUARDRAIL OR BARRIER.

J) PROVIDE TRAFFIC CONTROL FOR APPROPRIATE LANE CLOSURES FOR SURVEYING DONE BY THE DEPARTMENT.

PAVEMENT EDGE DROP OFF REQUIREMENTS

K) BACKFILL AT A 6:1 SLOPE UP TO THE EDGE AND ELEVATION OF EXISTING PAVEMENT IN AREAS ADJACENT TO AN OPENED TRAVEL LANE THAT HAS AN EDGE OF PAVEMENT DROP-OFF AS FOLLOWS:

BACKFILL DROP-OFFS THAT EXCEED 2 INCHES ON ROADWAYS WITH POSTED SPEED LIMITS OF 45 MPH OR GREATER.

BACKFILL DROP-OFFS THAT EXCEED 3 INCHES ON ROADWAYS WITH POSTED SPEED LIMITS LESS THAN 45 MPH.

BACKFILL WITH SUITABLE COMPACTED MATERIAL, AS APPROVED BY THE ENGINEER, AT NO EXPENSE TO THE DEPARTMENT.

L) DO NOT EXCEED A DIFFERENCE OF 2 INCHES IN ELEVATION BETWEEN OPEN LANES OF TRAFFIC FOR NOMINAL LIFTS OF 1.5 INCHES. INSTALL ADVANCE WARNING "UNEVEN LANES" SIGNS (W8-11) 275 IN ADVANCE AND A MINIMUM OF EVERY HALF MILE THROUGHOUT THE UNEVEN AREA.

TRAFFIC PATTERN ALTERATIONS

M) NOTIFY THE ENGINEER THIRTY (30) CALENDAR DAYS PRIOR TO ANY TRAFFIC PATTERN ALTERATION.

SIGNING

N) INSTALL ADVANCE WORK ZONE WARNING SIGNS WHEN WORK IS WITHIN 40 FT FROM THE EDGE OF TRAVEL LANE AND NO MORE THAN THREE (3) DAYS PRIOR TO THE BEGINNING OF CONSTRUCTION.

O) PROVIDE SIGNING AND DEVICES REQUIRED TO CLOSE THE ROAD ACCORDING TO THE ROADWAY STANDARD DRAWINGS AND TRAFFIC CONTROL PLANS.

PROVIDE SIGNING REQUIRED FOR THE OFF-SITE DETOUR ROUTE AS SHOWN IN THE TRAFFIC CONTROL PLANS.

P) COVER OR REMOVE ALL SIGNS AND DEVICES REQUIRED TO CLOSE THE ROAD WHEN ROAD CLOSURE IS NOT IN OPERATION.

COVER OR REMOVE ALL SIGNS REQUIRED FOR THE OFF-SITE DETOUR WHEN THE DETOUR IS NOT IN OPERATION.

Q) ENSURE ALL NECESSARY SIGNING IS IN PLACE PRIOR TO ALTERING ANY TRAFFIC PATTERN.

TRAFFIC BARRIER

R) INSTALL AND SPACE DRUMS NO GREATER THAN TWICE THE POSTED SPEED LIMIT (MPH) TO CLOSE OR KEEP THE SECTION OF THE ROADWAY CLOSED UNTIL THE TEMPORARY BARRIER CAN BE PLACED OR AFTER THE TEMPORARY BARRIER IS REMOVED.

TRAFFIC CONTROL DEVICES

S) WHEN LANE CLOSURES ARE NOT IN EFFECT SPACE CHANNELIZING DEVICES IN WORK AREAS NO GREATER IN FEET THAN TWICE THE POSTED SPEED LIMIT (MPH) EXCEPT, 10 FT ON-CENTER IN RADII, AND 3 FT OFF THE EDGE OF AN OPEN TRAVELWAY.REFER TO STANDARD SPECIFICATIONS FOR ROADS AND STRUCTURES SECTIONS 1130 (DRUMS), 1135 (CONES) AND 1180 (SKINNY DRUMS) FOR ADDITIONAL REQUIREMENTS.

T) PLACE TYPE III BARRICADES, WITH "ROAD CLOSED" SIGN R11-2 ATTACHED, OF SUFFICIENT LENGTH TO CLOSE ENTIRE ROADWAY.

PAVEMENT MARKINGS AND MARKERS

U) INSTALL TEMPORARY PAVEMENT MARKINGS AND TEMPORARY PAVEMENT MARKERS ON INTERIM LAYERS OF PAVEMENT AS FOLLOWS:

ROAD NAME	MARKING	MARKER
US 133 RIVER ROAD	PAINT	TEMPORARY RAISED
OLD RIVER ROAD	PAINT	NONE

V) PLACE ONE APPLICATION OF PAINT FOR TEMPORARY TRAFFIC PATTERNS. PLACE A SECOND APPLICATION OF PAINT SIX (6) MONTHS AFTER THE INITIAL APPLICATION AND EVERY SIX MONTHS AS DIRECTED BY THE ENGINEER.

W) TIE PROPOSED PAVEMENT MARKING LINES TO EXISTING PAVEMENT MARKING LINES.

X) REMOVE/REPLACE ANY CONFLICTING/DAMAGED PAVEMENT MARKINGS AND MARKERS BY THE END OF EACH DAY'S OPERATION.

MISCELLANEOUS

Y) IN THE EVENT A TIE-IN CANNOT BE MADE IN ONE DAY'S TIME, BRING THE TIE-IN AREA TO AN APPROPRIATE ROADWAY ELEVATION AS DETERMINED BY THE ENGINEER. PLACE BLACK ON ORANGE "LOOSE GRAVEL" SIGNS (W8-7) AND BLACK ON ORANGE "PAVEMENT ENDS" SIGNS (W8-3) 100 AND 325 RESPECTIVELY IN ADVANCE OF THE UNEVEN AREAS. USE DRUMS TO DELINEATE THE EDGE OF ROADWAY ALONG UNPAVED AREAS.

PROJECT NOTES

1) CONTRACTOR SHALL MAINTAIN DRIVEWAY ACCESS AT ALL TIMES.

2) CONES OR SKINNY DRUMS MAY BE USED IN LIEU OF DRUMS.

3) CONTRACTOR SHALL NOT EXCEED MORE THAN 2,000' OF LANE CLOSURE AT ONE TIME UNLESS OTHERWISE DIRECTED BY THE ENGINEER.

4) ONE LANE-TWO WAY OPERATIONS RESTRICTED TO DAYLIGHT HOURS.

APPROVED: _____

DATE: _____

NORTH CAROLINA PROFESSIONAL ENGINEER SEAL 018122

Jeffrey A. Koontz 3/7/2023

DocuSigned by: B4EBFECCD5A4...

DOCUMENT NOT CONSIDERED FINAL UNLESS ALL SIGNATURES COMPLETED

DIVISION OF HIGHWAYS · STATE OF NORTH CAROLINA · DEPARTMENT OF TRANSPORTATION · WORK ZONE TRAFFIC CONTROL

TRANSPORTATION OPERATIONS PLAN

2/20/2023
pw:\\gecom-na-pw.bentley.com:AECOM_USA_North_Carolina\Documents\60512233-U-5914 - NC 133\900-CAD GIS\910_CAD\70_NCDOT_TIP\Traffic\TrafficControl\TCP\U5914_TC_TMP_notes.dgn
patrick.mcpherson

DocuSign Envelope ID: DA8FCAD3-4D78-49CE-91F9-09622D5D506A

PROJ. REFERENCE NO.	SHEET NO.
U-5914	TMP-1C

PHASE I

STEP 1) PRIOR TO BEGINNING ANY CONSTRUCTION ACTIVITY, INSTALL WORK ZONE ADVANCE WARNING SIGNS ON US 133 (RIVER ROAD), OLD RIVER ROAD, AND BLACKWELL ROAD USING RSD 1101.01 (SHEET 3 OF 3).

STEP 2) MAINTAIN EXISTING TRAFFIC PATTERNS AND INSTALL AND COVER OFF-SITE DETOUR SIGNS FOR OLD RIVER ROAD AS SHOWN ON TMP-02.

INTERMEDIATE CONTRACT TIME

COMPLETE THE FOLLOWING WORK OF PHASE I, STEPS 3 AND 4 FOR OLD RIVER ROAD IN ACCORDANCE WITH THE INTERMEDIATE CONTRACT TIME OF 90 CONSECUTIVE DAYS (SEE SPECIAL PROVISIONS).

STEP 3) PLACE BARRICADES TO CLOSE -Y1- (OLD RIVER RD), UNCOVER DETOUR SIGNS AND SHIFT TRAFFIC TO TEMPORARY DETOUR PATTERN.

CONSTRUCT BOX CULVERT AND -Y1- WIDENING, UP TO BUT NOT INCLUDING THE FINAL LAYER OF SURFACE COURSE ACCORDING TO THE FOLLOWING STATIONS: (SEE TMP-02)

-Y1- STA. 10+31+/- TO STA. 16+40+/-

PLACE TEMPORARY PAVEMENT MARKINGS (PAINT) AND MARKERS IN FINAL PATTERN AS SHOWN ON TMP-03.

STEP 4) REMOVE BARRICADES AND DETOUR SIGNING AND OPEN -Y1- (OLD RIVER RD) IN THE FINAL TRAFFIC PATTERN.

NOTE: PHASE II WORK MAY BEGIN PRIOR TO COMPLETING PHASE I.

PHASE II

STEP 1) USING RSD 1101.02 (SHEET 1 OF 14) AND FLAGGERS WITH POLICE AT THE BLACKWELL RD INTERSECTION AS NEEDED FOR ALTERNATING NC 133 LANE CLOSURES ALONG DAILY WORK ZONE, PLACE DRUMS ALONG -L- (RIVER RD.) TO CLOSE THE NORTHBOUND LANE AND MAINTAIN ALL TRAFFIC IN A 1-LANE, 2-WAY TRAFFIC PATTERN ON THE SOUTHBOUND LANE. CONSTRUCT THE FULL DEPTH PAVEMENT WIDENING OF NORTHBOUND NC 133 UP TO THE EXISTING EDGE AND ELEVATION ACCORDING TO THE FOLLOWING STATIONS: (SEE TMP-3)

-L- STA. 11+14+/- TO STA. 29+70+/- LT

RESET DRUMS AT THE END OF EACH DAY TO OPEN BOTH LANES TO 2-LANE, 2-WAY TRAFFIC.

STEP 2) USING RSD 1101.03 FOR TEMPORARY ROAD CLOSURE WITH FLAGGERS, INSTALL AND COVER THE SIGNAL MODIFICATION AT THE BLACKWELL ROAD INTERSECTION.

STEP 3) USING RSD 1101.02 (SHEET 1 OF 14) AND FLAGGERS, PLACE TEMP. PAVEMENT MARKINGS (PAINT) FOR 2-LANE, 2-WAY TRAFFIC AS SHOWN ON TMP-04, UNCOVER AND ACTIVATE THE SIGNAL MODIFICATION AND SHIFT TRAFFIC TO TEMPORARY 2-LANE, 2-WAY PATTERN FOR PHASE III CONSTRUCTION.

PHASE III

STEP 1) INSTALL DRUMS TO CLOSE THE BLACKWELL ST RIGHT TURN LANE (SEE TMP-04). WORKING AWAY FROM TRAFFIC OR USING RSD 1101.02 (SHEET 1 OF 14) AND FLAGGERS AS NEEDED FOR THE DAILY WORK ZONE, CONSTRUCT THE MULTIUSE PATH, SIDEWALK, CURB RAMP AND PAVEMENT WIDENING UP TO EXISTING EDGE OF PAVEMENT OF SOUTHBOUND NC 133 ACCORDING TO THE FOLLOWING STATIONS: (SEE TMP-4)

-L- STA. 10+00+/- TO STA. 29+70+/- RT

RESET DRUMS AT THE END OF EACH DAY TO OPEN BOTH LANES TO 2-LANE, 2-WAY TRAFFIC ALONG NC 133. MAINTAIN RIGHT TURN LANE CLOSURE ON BLACKWELL ST.

STEP 2) USING RSD 1101.03 AND FLAGGERS FOR TEMPORARY ROAD CLOSURE, INSTALL AND COVER THE FINAL SIGNAL AT THE BLACKWELL ROAD INTERSECTION.

PHASE IV (NOT DEPICTED)

STEP 1) USING RSD 1101.02 (SHEET 1 OF 14) AND FLAGGERS FOR ALTERNATING LANE CLOSURES ON NC 133 (RIVER ROAD) AND OLD RIVER ROAD, CONSTRUCT CONCRETE MONOLITHIC ISLAND ON OLD RIVER ROAD, PLACE WEDGING OVER NC 133, AND PLACE THE FINAL LAYERS OF SURFACE COURSE ON -L- AND -Y1- AND USING RSD 1205.01. 1205.02. 1205.04. 1205.05. 1205.08. 1250.01. AND 1251.01 PLACE FINAL PAVEMENT MARKINGS (THERMOPLASTIC) AND MARKERS (RAISED) ACCORDING TO THE FOLLOWING STATIONS: (SEE PAVEMENT MARKING PLANS)

-L- STA. 11+14+/- TO STA. 29+70+/-
- Y1- STA. 10+31+/- TO STA. 16+40+/-

UNCOVER AND ACTIVATE FINAL SIGNAL, REMOVE ALL DEVICES AND OPEN PROJECT TO TRAFFIC IN FINAL PATTERN.

APPROVED: _____

DATE: _____

NORTH CAROLINA PROFESSIONAL SEAL 018122 ENGINEER

Digitally signed by JEFFREY A. KOONTZ
DN: cn=JEFFREY A. KOONTZ, o=NCDOT, ou=Traffic Engineering Branch, email=jakoontz@ncdot.gov, c=US
Date: 2023.03.07 08:54:57 -05'00'

3/7/2023

DOCUMENT NOT CONSIDERED FINAL UNLESS ALL SIGNATURES COMPLETED

DIVISION OF HIGHWAYS · STATE OF NORTH CAROLINA · DEPARTMENT OF TRANSPORTATION · WORK ZONE TRAFFIC CONTROL

PROJECT PHASING

2/20/2023
D:\\acom-nd-pw.bentley.com:AECOM_USA_North_Carolina\Documents\60512233-U-5914 - NC 133\900-CAD GIS\910_CAD\70_NCDOT_TIP\Traffic\TrafficControl\TCP\U5914_TC_TMP_notes.dgn
patrick.mcpherson

DocuSign Envelope ID: DA8FCAD3-4D78-49CE-91F9-09622D5D506A

PROJ. REFERENCE NO.	SHEET NO.
U-5914	TMP-1D

SIGN NUMBER: D3-2
TYPE: D
QUANTITY: 1

SIGN WIDTH: 3′-0″
HEIGHT: 2′-0″
TOTAL AREA: 6.0 Sq.Ft.

BORDER TYPE: FLUSH
RECESS: 0.05″
WIDTH: 0.45″
RADII: 1.7″

NO. Z BARS:
LENGTH:

BACKG COLOR: Green
COPY COLOR: White

SYMBOL	X	Y	WID	HT

MAT'L: 0.063″ (1.6 mm) ALUMINUM
0.080″ (2.0 mm) ALUMINUM
0.125″ (3.2 mm) ALUMINUM

DESIGN BY: Patrick McPherson E.I. CHECKED BY: Jeff Koontz P.E. Sep 12, 2022
PROJECT ID: ID LOCATION: DIV: DIV

USE NOTES:

1. Legend and border(except those that are colored black) shall be direct applied Grade C sheeting.
2. Background shall be Grade A, B, or C reflective sheeting.
3. Shields; A, B, and C type arrows shall be on 0.032″ (0.8mm) aluminum with Grade C reflective sheeting and demountable.
4. Bottom panel shall be yellow Grade C sheeting. Legend shall be direct applied black non-reflective sheeting. Arrow shall be on 0.032″ aluminum, black non-reflective sheeting an demountable. Yellow panel is:

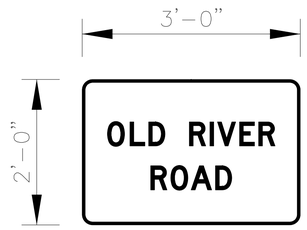

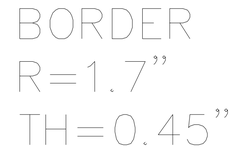

Spacing Factor is 1 unless specified otherwise

LETTER POSITIONS

Letter locations are panel edge to lower left corner

																										Series/Size Text Length
	O	L	D		R	I	V	E	R																	D 2000
	4.2	7.9	11	13.7	17.7	21.1	22.3	26	29.1																	27.7
	R	O	A	D																						D 2000
	11.3	14.6	18	22																						13.4

FILENAME: U5914_TC_TMP_PH_1

NORTH CAROLINA D.O.T. SIGN DETAIL

APPROVED: _____

DATE: _____

NORTH CAROLINA PROFESSIONAL SEAL 018122 ENGINEER JEFFREY A KOONTZ
DocuSigned by: Jeffrey A Koontz
3/7/2023

DOCUMENT NOT CONSIDERED FINAL UNLESS ALL SIGNATURES COMPLETED

DIVISION OF HIGHWAYS STATE OF NORTH CAROLINA DEPARTMENT OF TRANSPORTATION WORK ZONE TRAFFIC CONTROL

SIGNING DETAIL

2/20/2023
D:\\aecom-nc-pw.bentley.com:AECOM_USA_North_Carolina\Documents\60512233-U-5914 - NC 133\900-CAD GIS\90_CAD\70_NCDOT_TIP\Traffic\TraffiicControl\TCP\U5914_TC_TMP_notes.dgn
patrick.mcpherson

DocuSign Envelope ID: DA8FCAD3-4D78-49CE-91F9-09622D5D506A

PROJ. REFERENCE NO.	SHEET NO.
U-5914	TMP-02

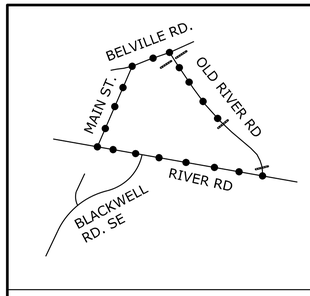

MAIN ST.

DETOUR M4-8 24″ x 12″
M6-1 21″ x 15″

ON RAMP

EXISTING SIGNAL

10

RIVER RD. SE

300′ 200′ 100′

BREAK LINE - THIS SHEET

MAIN ST.

END CONSTRUCTION
-Y1- STA. 16+40

END DETOUR M4-8 A 24″ X 18″

R11-2 60″ x 30″
ROAD CLOSED 0.2 MILES AHEAD LOCAL TRAFFIC ONLY
TYPE III BARRICADE

TO M4-5 24″ X 12″
OLD RIVER ROAD SP-1 36″ x 24″
M5-1 21″ X 15″

W20-3 48″ X 48″
ROAD CLOSED AHEAD
NEXT LEFT SP-4L 42″ X 12″

TO M4-5 24″ X 12″
OLD RIVER ROAD SP-1 36″ x 24″
M5-1 21″ X 15″

BLACKWELL RD. SE

15

PROP. RCBC

R11-2 48″ x 30″
ROAD CLOSED
TYPE III BARRICADE

OLD RIVER RD.

W20-3 48″ X 48″
ROAD CLOSED AHEAD
NEXT RIGHT SP-4R 42″ X 12″

DETOUR M4-8 24″ x 12″
M6-3 21″ x 15″

BEGIN CONSTRUCTION
-Y1- STA. 10+31

20 25 30

RIVER RD. SE

200′ 200′ 200′

BREAK LINE - THIS SHEET

ROAD CLOSED AHEAD W20-3 48″ x 48″
NEXT LEFT SP-4L 42″ X 12″

R11-2 48″ x 30″
ROAD CLOSED
TYPE III BARRICADE

APPROVED: _____

DATE: _____

NORTH CAROLINA PROFESSIONAL SEAL 018122 ENGINEER PATRICK A MCPHERSON

Docusigned by: Patrick A McPherson 84EBFECCD3F4...

3/7/2023

DOCUMENT NOT CONSIDERED FINAL UNLESS ALL SIGNATURES COMPLETED

DIVISION OF HIGHWAYS · STATE OF NORTH CAROLINA · DEPARTMENT OF TRANSPORTATION · WORK ZONE TRAFFIC CONTROL

PHASE I
DETAIL

2/20/2023
pw:\\aecom-na-pw.bentley.com:AECOM_USA_North_Carolina\Documents\60512233-U-5914 - NC 133\900-CAD GIS\910_CAD\70_NCDOT_TIP\Traffic\TrafficControl\TCP\U5914_TC_TMP_PSH_02.dgn
patrick.mcpherson

DocuSign Envelope ID: DA8FCAD3-4D78-49CE-91F9-09622D5D506A

PROJ. REFERENCE NO.	SHEET NO.
U-5914	TMP-03

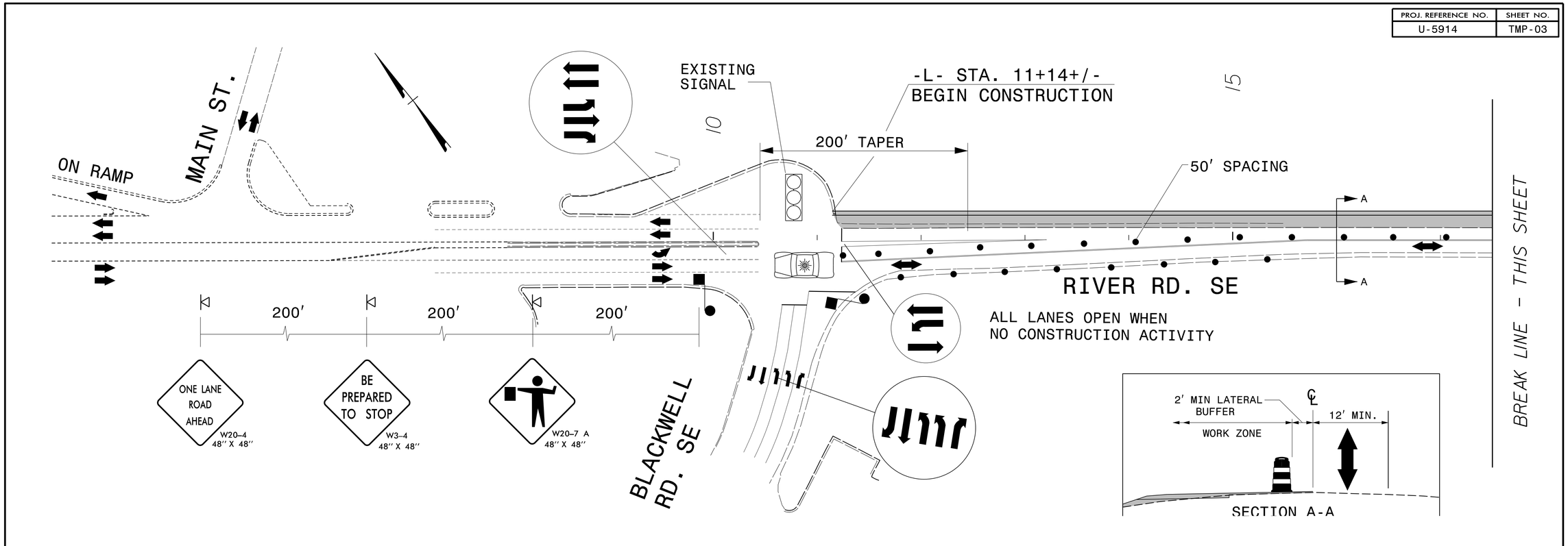

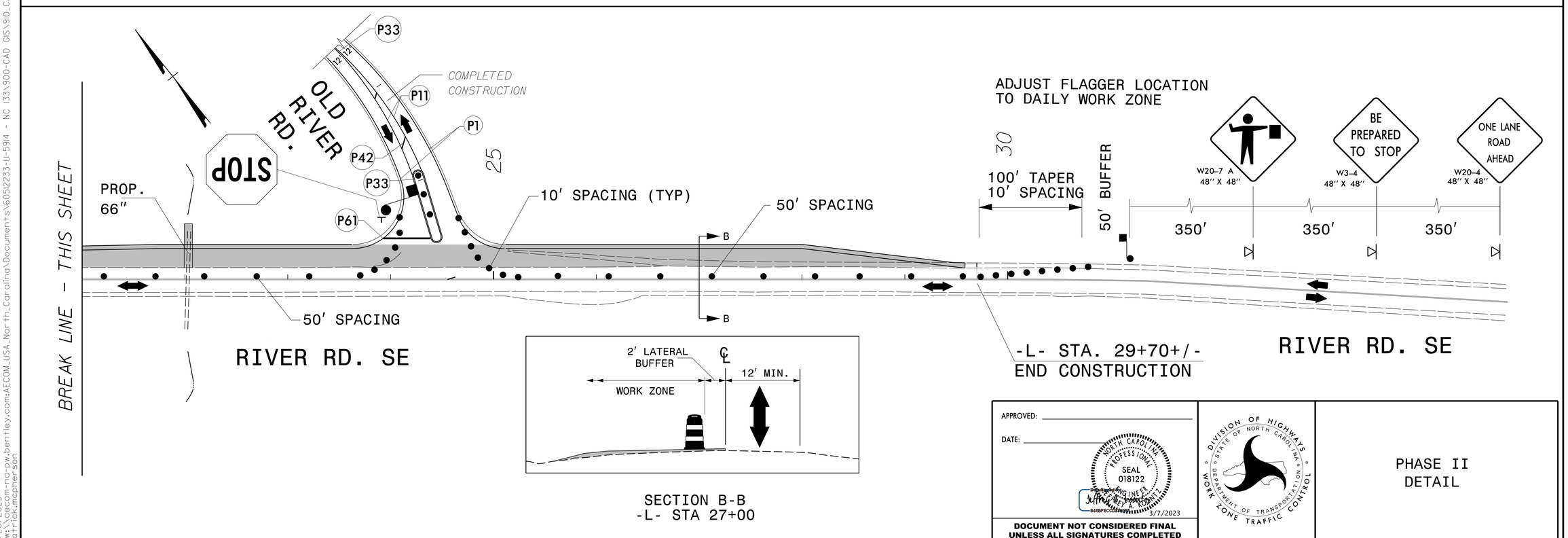

APPROVED:

DATE:

NORTH CAROLINA PROFESSIONAL SEAL 018122 ENGINEER JEFFREY A. KONITZ

3/7/2023

DOCUMENT NOT CONSIDERED FINAL UNLESS ALL SIGNATURES COMPLETED

DIVISION OF HIGHWAYS · STATE OF NORTH CAROLINA · DEPARTMENT OF TRANSPORTATION · WORK ZONE TRAFFIC CONTROL

PHASE II DETAIL

2/20/2023
pw:\\aecom-na-pw.bentley.com:AECOM_USA_North_Carolina\Documents\60512233-U-5914 - NC 133\900-CAD GIS\910_CAD\70_NCDOT_TIP\Traffic\TrafficControl\TCP\U5914_TC_TMP_PSH_03.dgn
patrick.mcpherson

DocuSign Envelope ID: DA8FCAD3-4D78-49CE-91F9-09622D5D506A

PROJ. REFERENCE NO.	SHEET NO.
U-5914	TMP-04

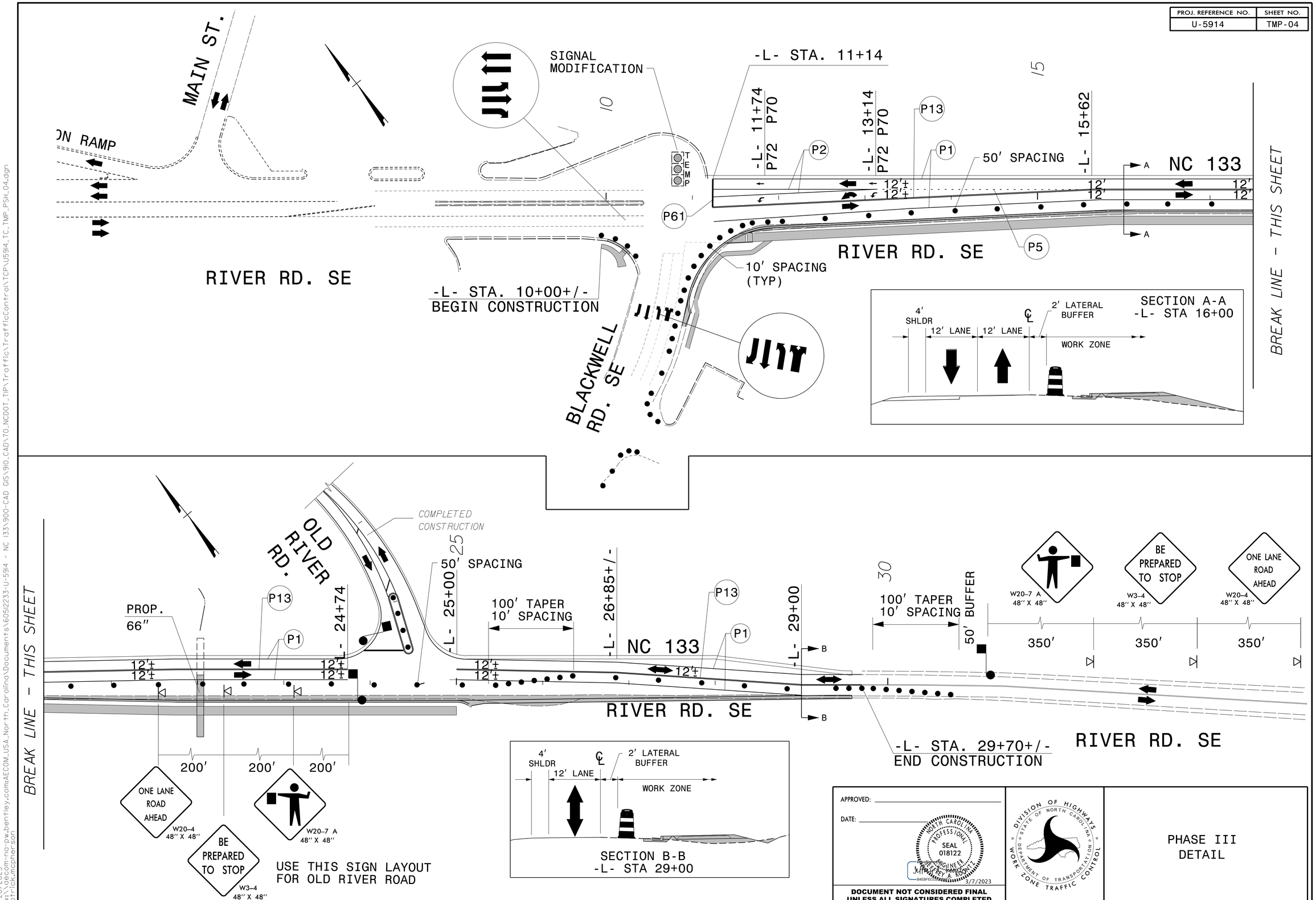

APPROVED:

DATE:

NORTH CAROLINA PROFESSIONAL SEAL 018122 ENGINEER JEFFREY A. ROONTZ

3/7/2023

DOCUMENT NOT CONSIDERED FINAL UNLESS ALL SIGNATURES COMPLETED

DIVISION OF HIGHWAYS STATE OF NORTH CAROLINA DEPARTMENT OF TRANSPORTATION WORK ZONE TRAFFIC CONTROL

PHASE III DETAIL

2/20/2023
pw:\\aecom-na-pw.bentley.com:AECOM_USA_North_Carolina\Documents\60512233-U-5914 - NC 133\900-CAD GIS\910_CAD\70_NCDOT_TIP\Traffic\TrafficControl\TCP\U5914_TC_TMP_PSH_04.dgn
patrick.mcpherson

DocuSign Envelope ID: 9C66ABFD-04A2-4FB8-9CFA-4A9398852C35

T.I.P.: U-5914

CONTRACT:

NCDOT

PAVEMENT MARKING & SIGNING PLAN

BRUNSWICK COUNTY

TIP NO.	SHEET NO.
U-5914	PMP-1

APPROVED: _____

DATE: _____

SEAL

NORTH CAROLINA PROFESSIONAL SEAL 018122 ENGINEER JEFFREY KOONTZ

DocuSigned by: Jeffrey Koontz B4EBFECC02D3

3/27/2023

DOCUMENT NOT CONSIDERED FINAL UNLESS ALL SIGNATURES COMPLETED

INDEX

SHEET NO.	DESCRIPTION
PMP-1	PAVEMENT MARKING PLAN TITLE AND SCHEDULE SHEET
PMP-1A	SIGNING NOTES AND QUANTITIES
PMP-2 THRU PMP-3	PAVEMENT MARKING DETAILS EXISTING & PROPOSED SIGNS

ROADWAY STANDARD DRAWING

THE FOLLOWING ROADWAY STANDARDS AS APPEAR IN "ROADWAY STANDARD DRAWINGS" - PROJECT SERVICES UNIT - N.C. DEPARTMENT OF TRANSPORTATION - RALEIGH, N.C., DATED JANUARY 2018 ARE APPLICABLE TO THIS PROJECT AND BY REFERENCE HEREBY ARE CONSIDERED A PART OF THESE PLANS:

STD. NO.	TITLE
904.10	ORIENTATION OF GROUND MOUNTED SIGNS
904.50	MOUNTING OF TYPE 'D','E' AND 'F' SIGNS ON 'U' CHANNEL POST
1205.01	PAVEMENT MARKINGS - LINE TYPES AND OFFSETS
1205.02	PAVEMENT MARKINGS - TWO-LANE AND MULTILANE ROADWAYS
1205.04	PAVEMENT MARKINGS - INTERSECTIONS
1205.05	PAVEMENT MARKINGS - TURN LANES
1205.08	PAVEMENT MARKINGS - SYMBOLS AND WORD MESSAGES
1205.09	PAVEMENT MARKINGS - PAINTED ISLANDS
1250.01	PAVEMENT MARKER SPACING
1251.01	RAISED PAVEMENT MARKERS - PERMANENT AND TEMPORARY
1253.01	RAISED PAVEMENT MARKERS - SNOWPLOWABLE

PAVEMENT MARKING SCHEDULE

SYMBOL	DESCRIPTION
T1	4" WHITE EDGELINE
T2	4" WHITE SOLID LANE LINE
T3	4" 10 FT. WHITE SKIP
T4	4" 3 FT. - 9 FT./SP WHITE MINISKIP
T5	4" 2 FT. - 6 FT./SP WHITE MINISKIP
T11	4" YELLOW SINGLE CENTER
T23	6" 3 FT-9 FT/SP WHITE MINISKIP
T33	4" YELLOW DOUBLE CENTER
T40	8" WHITE GORELINE
T51	12" WHITE DIAGONAL
T52	12" YELLOW DIAGONAL
T61	24" WHITE STOPBAR
T62	24" WHITE CROSSWALK LINE
T70	LEFT TURN ARROW
T71	RIGHT TURN ARROW
T72	STRAIGHT ARROW
T102	12" YIELD LINE TRIANGLE

GENERAL NOTES

THE FOLLOWING GENERAL NOTES APPLY AT ALL TIMES FOR THE DURATION OF THE CONSTRUCTION PROJECT, EXCEPT WHEN OTHERWISE NOTED IN THE PLAN, OR DIRECTED BY THE ENGINEER.

A) INSTALL PAVEMENT MARKINGS AND PAVEMENT MARKERS ON THE FINAL SURFACE AS FOLLOWS:

ROAD NAME	MARKING	MARKER
NC 133 (RIVER ROAD)	THERMOPLASTIC	NON-CAST IRON SNOWPLOWABLE
SR 1554 (OLD RIVER ROAD)	THERMOPLASTIC	RAISED
BLACKWELL ROAD SE	THERMOPLASTIC	RAISED

B) TIE PROPOSED PAVEMENT MARKING LINES TO EXISTING PAVEMENT MARKING LINES.

C) REMOVE/REPLACE ANY CONFLICTING/DAMAGED PAVEMENT MARKINGS AND MARKERS.

D) STOP BAR LOCATION AT NON-SIGNALIZED INTERSECTIONS MAY BE ADJUSTED AS DIRECTED BY THE ENGINEER.

E) UNLESS OTHERWISE SPECIFIED, HEATED-IN-PLACE THERMOPLASTIC MAY BE USED IN LIEU OF EXTRUDED THERMOPLASTIC FOR STOP BARS, SYMBOLS, CHARACTERS AND DIAGONALS. IF HEATED-IN-PLACE IS USED, IT SHALL BE PAID FOR USING THE EXTRUDED THERMOPLASTIC PAY ITEM.

PLAN PREPARED BY: AECOM

JEFF KOONTZ, P.E. SIGNING & DELINEATION STANDARDS ENGINEER

PATRICK MCPHERSON, E.I. SIGNING & DELINEATION PROJECT DESIGN ENGINEER

AECOM
NC FIRM LICENSE No: F-0342
701 Corporate Center Drive, Suite 475 Raleigh, NC 27607
(919) 854-6200 - (919) 854-6259(FAX)

3/27/2023
pw:\\aecom-na-pw.bentley.com:AECOM_USA_North_Carolina\Documents\60512233-U-5914 - NC 133\900-CAD GIS\910.CAD\70.NCDOT_TIP\Traffic\PMP\U5914_pmp01.dgn
patrick.mcpherson

DocuSign Envelope ID: F7F96581-7D6E-4E95-A025-CA4EA6B748BB

T.I.P.: U-5914

CONTRACT:

TIP NO.	SHEET NO.
U-5914	PMP-1A

APPROVED: _____

DATE: _____

SEAL

NORTH CAROLINA PROFESSIONAL SEAL 018122 ENGINEER

DocuSigned by: Jeffrey Brooks Lemmond
B4E8FECCE8E4...

3/7/2023

DOCUMENT NOT CONSIDERED FINAL UNLESS ALL SIGNATURES COMPLETED

SUMMARY OF QUANTITIES

ITEM NO.		ITEM DESCRIPTION	QUANTITY	UNIT
DESC. NO.	SECT. NO.			
4025000000	901	CONTRACTOR FURNISHED, TYPE E SIGN	29	S.F.
4072000000	903	SUPPORTS, 3 LB STEEL U-CHANNEL	120	L.F.
4096000000	904	SIGN ERECTION, TYPE E	6	EA.
4116100000	904	SIGN ERECTION, RELOCATE SIGN TYPE E (GROUND MOUNTED)	11	EA.
4116100000	904	SIGN ERECTION, RELOCATE SIGN TYPE D (GROUND MOUNTED)	4	EA.
4192000000	907	DISPOSAL OF SUPPORT, U-CHANNEL	14	EA.

GENERAL NOTES

1) ALL TYPE 'D' SIGNS SHALL BE MOUNTED ON TWO U-CHANNEL POSTS UNLESS OTHERWISE INDICATED ON THE PLANS.

2) IF REMOVAL OR RELOCATION OF SIGNS ON PRIVATE STREET (NON-STATE MAINTAINED) IS REQUIRED DUE TO CONSTRUCTION, THE CONTRACTOR SHALL INFORM THE ENGINEER. THE WORK WILL BE COMPLETED BY OTHERS.

3) WHEN NOT STATIONED OR DIMENSIONED ON PLANS, ALL 'E' AND 'F' SIGNS SHALL BE FIELD LOCATED BY THE ENGINEER.

4) ALL EXISTING SIGNS ON "U" CHANNEL POST WITHIN THE PROJECT LIMITS SHALL BE REMOVED AND DISPOSED OF UNLESS OTHERWISE NOTED ON PLANS.

5) THE BACKGROUND FOR TYPE E & F SIGNS SHALL BE TYPE C REFLECTIVE SHEETING.

PROJECT NOTES

1. RELOCATE TYPE E SIGN ON NEW U-CHANNEL SUPPORTS
2. RELOCATE TYPE D SIGN ON NEW U-CHANNEL SUPPORTS
3. RELOCATE HISTORIC MARKER AND EXISTING SUPPORT

★ SIGNALIZED INTERSECTION

(401) QUANTITY REQ'D 1	(402) QUANTITY REQ'D 1	(403) QUANTITY REQ'D 1	(404) QUANTITY REQ'D 2	(405) QUANTITY REQ'D 1
 36" X 36" R1-1	 30" X 30" R1-1	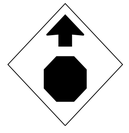 30" X 30" W3-1	 24" X 30" R4-7	 18" X 18" R1-5R
ONE "U" POST PER SIGN	ONE "U" POST PER SIGN	ONE "U" POST PER SIGN	ONE "U" POST PER SIGN	ONE "U" POST PER SIGN

2/20/2023
pw:\\aecom-na-pw.bentley.com:AECOM_USA_North_Carolina\Documents\60512233-U-5914 - NC 133\900-CAD GIS\910_CAD\70_NCDOT_TIP\Traffic\PMP\U5914_pmp01.dgn
patrick.mepherson

DocuSign Envelope ID: F7F96581-7D6E-4E95-A025-CA4EA6B748BB

TIP NO.	SHEET NO.
U-5914	PMP-02

APPROVED: _____

DATE: _____

SEAL

NORTH CAROLINA PROFESSIONAL SEAL 018122 ENGINEER JEFFREY A. KOONTZ

3/7/2023

DOCUMENT NOT CONSIDERED FINAL UNLESS ALL SIGNATURES COMPLETED

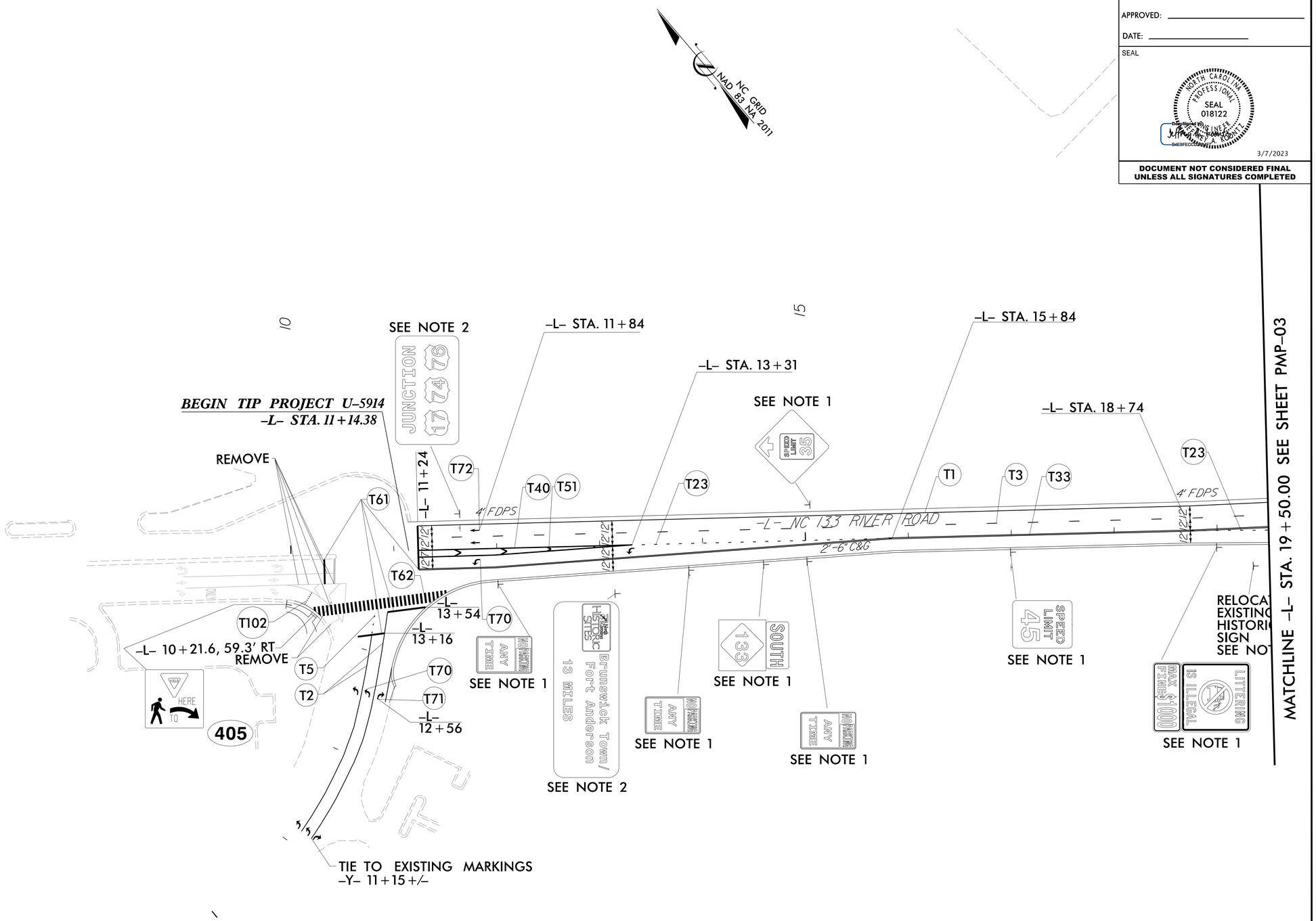

NOTE 1: RELOCATE TYPE E SIGN ON NEW U-CHANNEL SUPPORTS

NOTE 2: RELOCATE TYPE D SIGN ON NEW U-CHANNEL SUPPORTS

NOTE 3: RELOCATE HISTORIC MARKER AND EXISTING SUPPORT

PAVEMENT MARKING DETAILS EXISTING & PROPOSED SIGNS

DocuSign Envelope ID: F7F96581-7D6E-4E95-A025-CA4EA6B748BB

TIP NO.	SHEET NO.
U-5914	PMP-03

APPROVED: _____

DATE: _____

SEAL

NORTH CAROLINA PROFESSIONAL SEAL 018122 ENGINEER JEFFREY A. KOONTZ

3/7/2023

DOCUMENT NOT CONSIDERED FINAL UNLESS ALL SIGNATURES COMPLETED

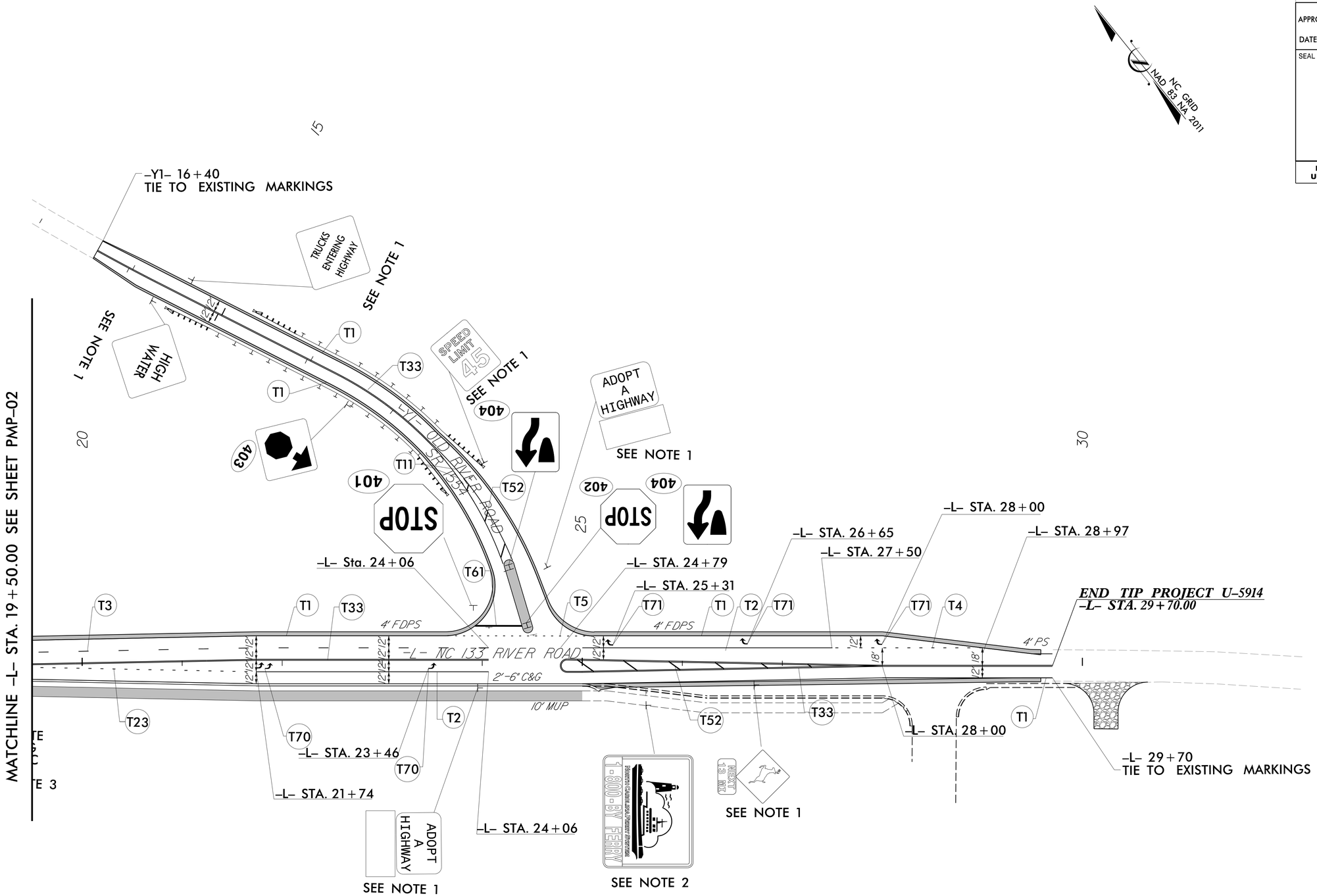

NOTE 1: RELOCATE TYPE E SIGN ON NEW U-CHANNEL SUPPORTS

NOTE 2: RELOCATE TYPE D SIGN ON NEW U-CHANNEL SUPPORTS

NOTE 3: RELOCATE HISTORIC MARKER AND EXISTING SUPPORT

PAVEMENT MARKING DETAILS EXISTING & PROPOSED SIGNS

TIP PROJECT: U-5914

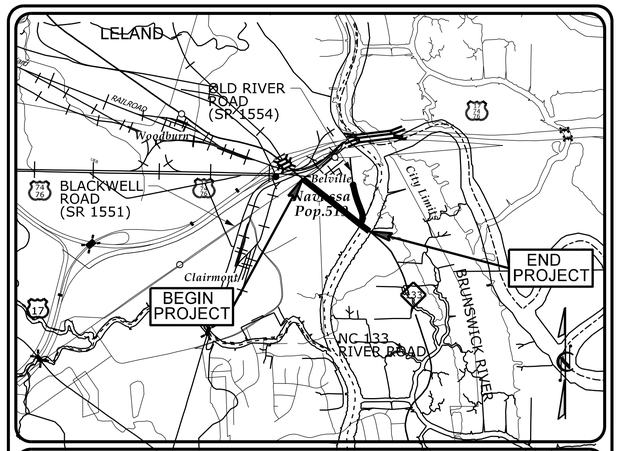

VICINITY MAP
NOT TO SCALE

STATE OF NORTH CAROLINA
DIVISION OF HIGHWAYS

PLAN FOR PROPOSED
HIGHWAY EROSION CONTROL

BRUNSWICK COUNTY

LOCATION: NC 133 FROM SR 1551 (BLACKWELL ROAD) TO SR 1554 (OLD RIVER ROAD)

TYPE OF WORK: GRADING, PAVING, WIDENING, AND DRAINAGE

NC GRID NAD 83 NA 2011

STATE	STATE PROJECT REFERENCE NO.	SHEET NO.	TOTAL SHEETS
N.C.	U-5914	EC-1	

STATE PROJ. NO.	F. A. PROJ. NO.	DESCRIPTION

EROSION AND SEDIMENT CONTROL MEASURES

Std. #	Description	Symbol
1630.03	Temporary Silt Ditch	TSD
1630.05	Temporary Diversion	TD
1605.01	Temporary Silt Fence	
1606.01	Special Sediment Control Fence	
1622.01	Temporary Berms and Slope Drains	
1630.02	Silt Basin Type B	
1633.01	Temporary Rock Silt Check Type-A	
	Temporary Rock Silt Check Type-A with Matting and Polyacrylamide (PAM)	
1633.02	Temporary Rock Silt Check Type-B	
	Wattle / Coir Fiber Wattle	SW CFW
	Wattle / Coir Fiber Wattle with Polyacrylamide (PAM)	
1634.01	Temporary Rock Sediment Dam Type-A	
1634.02	Temporary Rock Sediment Dam Type-B	
1635.01	Rock Pipe Inlet Sediment Trap Type-A	
1635.02	Rock Pipe Inlet Sediment Trap Type-B	
1630.04	Stilling Basin	
1630.06	Special Stilling Basin	
	Rock Inlet Sediment Trap:	
1632.01	Type A	A
1632.02	Type B	B
1632.03	Type C	C
	Skimmer Basin	
	Tiered Skimmer Basin	
	Infiltration Basin	

THIS PROJECT CONTAINS EROSION CONTROL PLANS FOR CLEARING AND GRUBBING PHASE OF CONSTRUCTION.

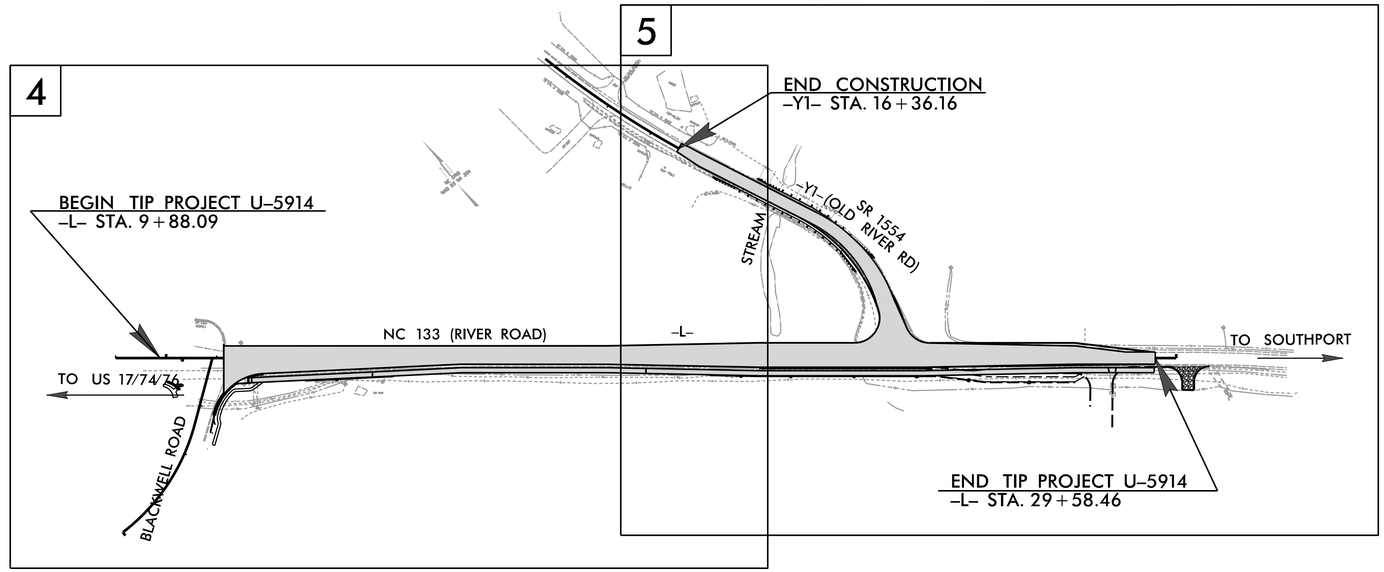

GRAPHIC SCALE

50 25 0 50 100
PLANS

THESE EROSION AND SEDIMENT CONTROL PLANS COMPLY WITH THE APPLICABLE REGULATIONS SET FORTH BY THE NCG-010000 GENERAL CONSTRUCTION PERMIT EFFECTIVE APRIL 1, 2019 AND ISSUED BY THE NORTH CAROLINA DEPARTMENT OF ENVIRONMENTAL QUALITY DIVISION OF WATER RESOURCES.

AECOM

Prepared in the Office of:

AECOM
Firm License No. F-0342
5438 Wade Park Boulevard, Suite 200
Raleigh NC 27607
(919) 461-1100

Designed by:

RENE REMY, CPESC, CPSWQ 3125
NAME *LEVEL III CERTIFICATION NO.*

Roadway Standard Drawings

The following roadway english standards as appear in "Roadway Standard Drawings"- Roadway Design Unit - N. C. Department of Transportation - Raleigh, N. C., dated January 2018 and the latest revison thereto are applicable to this project and by reference hereby are considered a part of these plans.

1604.01	Railroad Erosion Control Detail	1632.01	Rock Inlet Sediment Trap Type A
1605.01	Temporary Silt Fence	1632.02	Rock Inlet Sediment Trap Type B
1606.01	Special Sediment Control Fence	1632.03	Rock Inlet Sediment Trap Type C
1607.01	Gravel Construction Entrance	1633.01	Temporary Rock Silt Check Type A
1622.01	Temporary Berms and Slope Drains	1633.02	Temporary Rock Silt Check Type B
1630.01	Riser Basin	1634.01	Temporary Rock Sediment Dam Type A
1630.02	Silt Basin Type B	1634.02	Temporary Rock Sediment Dam Type B
1630.03	Temporary Silt Ditch	1635.01	Rock Pipe Inlet Sediment Trap Type A
1630.04	Stilling Basin	1635.02	Rock Pipe Inlet Sediment Trap Type B
1630.05	Temporary Diversion	1640.01	Coir Fiber Baffle
1630.06	Special Stilling Basin	1645.01	Temporary Stream Crossing
1631.01	Matting Installation		

9:07:34 AM
C:\pwworking\ranc\dms02030\U5914_EC_tsh.dgn
kong

PROJECT REFERENCE NO.	SHEET NO.
U-5914	EC-02

Prepared in the Office of: AECOM NC FIRM LICENSE No: F-0342 5438 Wade Park Boulevard, Suite 200 Raleigh, NC 27607 (919) 461-1100

8/17/99

REVISIONS

TEMPORARY ROCK SILT CHECK TYPE 'A' WITH EXCELSIOR MATTING AND POLYACRYLAMIDE (PAM)

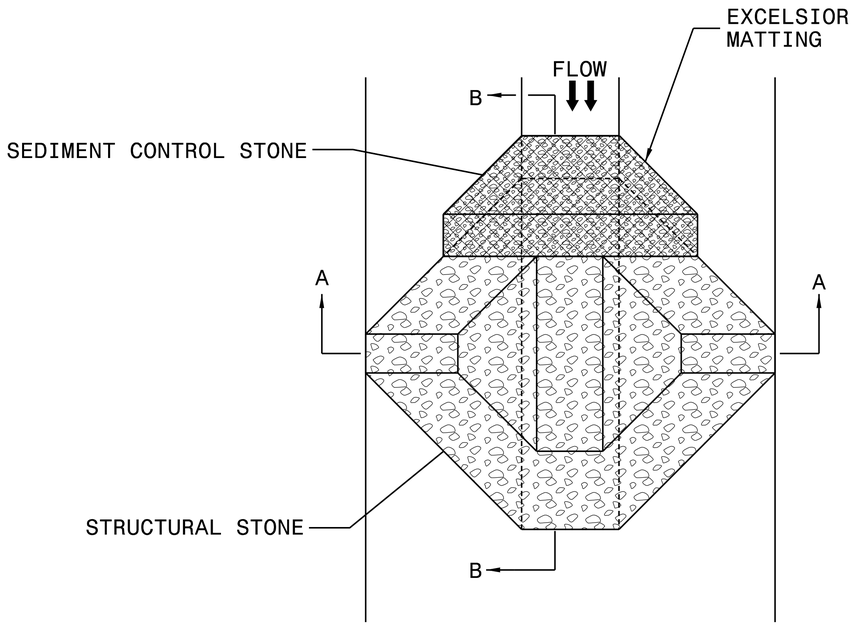

PLAN

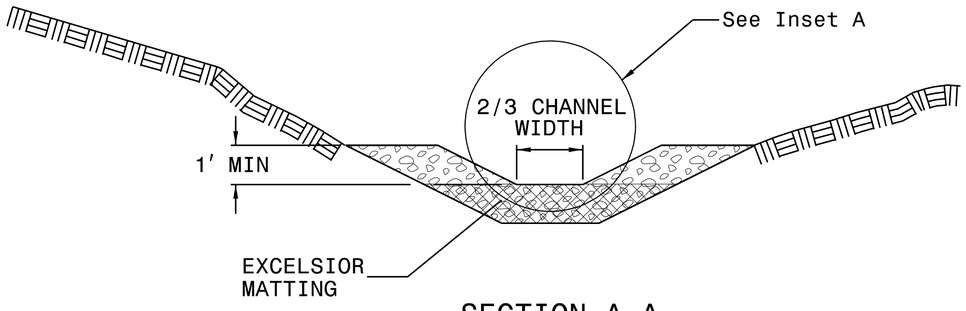

SECTION A-A

NOTES:

INSTALL TEMPORARY ROCK SILT CHECK TYPE A IN ACCORDANCE WITH ROADWAY STANDARD DRAWING NO. 1633.01.

USE EXCELSIOR FOR MATTING MATERIAL AND ANCHOR MATTING SECTION AT TOP AND BOTTOM WITH CLASS B STONE.

PRIOR TO POLYACRYLAMIDE (PAM) APPLICATION, OBTAIN A SOIL SAMPLE FROM PROJECT LOCATION, AND FROM OFFSITE MATERIAL, AND ANALYZE FOR APPROPRIATE PAM FLOCCULANT TO BE APPLIED TO EACH ROCK SILT CHECK.

INITIALLY APPLY 4 OUNCES OF POLYACRYLAMIDE (PAM) TO TOP OF MATTING SECTION AND AFTER EVERY RAINFALL EVENT THAT EQUALS OR EXCEEDS 0.50 INCHES.

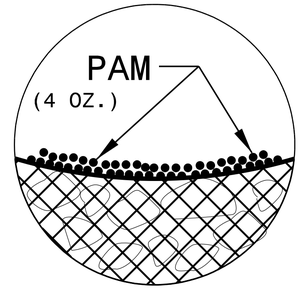

INSET A

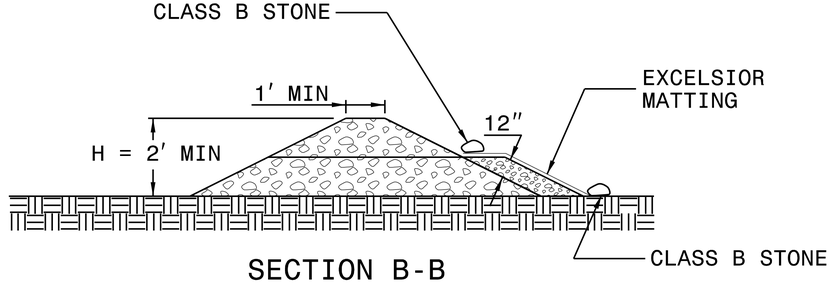

SECTION B-B

NOT TO SCALE

9:00 AM
C:\Documents and Setting\usnc\dms02030\U5914_EC_EC02.dgn
Reminder

PROJECT REFERENCE NO.	SHEET NO.
U-5914	EC-02A

Prepared in the Office of: AECOM NC FIRM LICENSE No: F-0342 5438 Wade Park Boulevard, Suite 200 Raleigh, NC 27607 (919) 461-1100

COIR FIBER WATTLE WITH POLYACRYLAMIDE (PAM) DETAIL

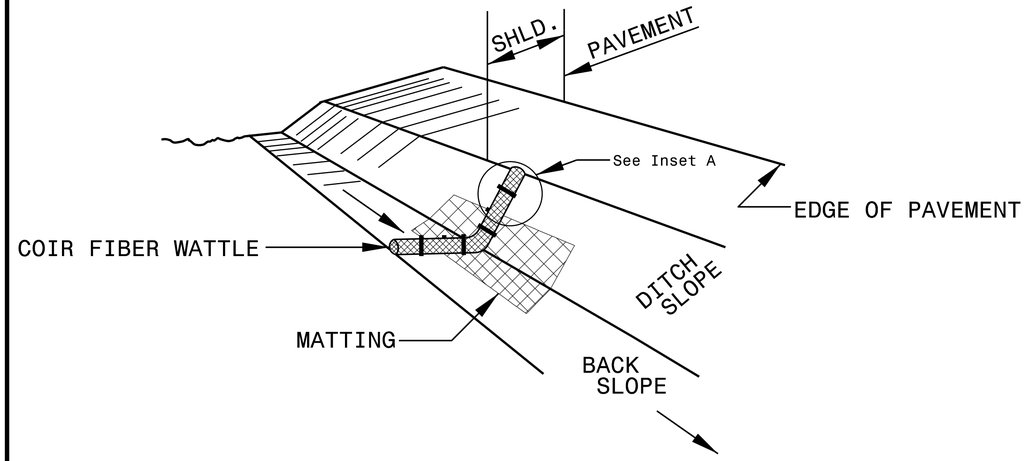

ISOMETRIC VIEW

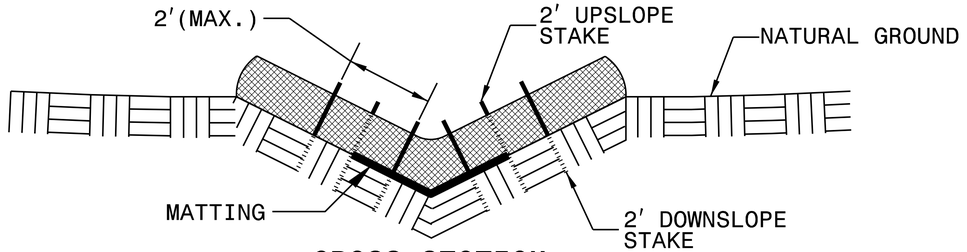

CROSS SECTION VEE DITCH

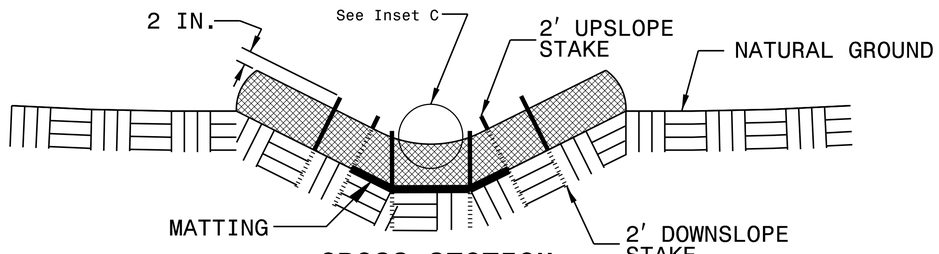

CROSS SECTION TRAPEZOIDAL DITCH

NOTES:

USE MINIMUM 12 IN. DIAMETER COIR FIBER (COCONUT FIBER) WATTLE.

USE 2 FT. WOODEN STAKES WITH A 2 IN. BY 2 IN. NOMINAL CROSS SECTION.

ONLY INSTALL WATTLE(S) TO A HEIGHT IN DITCH SO FLOW WILL NOT WASH AROUND WATTLE AND SCOUR DITCH SLOPES AND AS DIRECTED.

INSTALL A MINIMUM OF 2 UPSLOPE STAKES AND 4 DOWNSLOPE STAKES AT AN ANGLE TO WEDGE WATTLE TO BOTTOM OF DITCH.

PROVIDE STAPLES MADE OF 0.125 IN. DIAMETER STEEL WIRE FORMED INTO A U SHAPE NOT LESS THAN 12" IN LENGTH.

INSTALL STAPLES APPROXIMATELY EVERY 1 LINEAR FOOT ON BOTH SIDES OF WATTLE AND AT EACH END TO SECURE IT TO THE SOIL.

INSTALL MATTING IN ACCORDANCE WITH SECTION 1631 OF THE STANDARD SPECIFICATIONS.

PRIOR TO POLYACRYLAMIDE (PAM) APPLICATION, OBTAIN A SOIL SAMPLE FROM PROJECT LOCATION, AND FROM OFFSITE MATERIAL, AND ANALYZE FOR APPROPRIATE PAM FLOCCULANT TO BE APPLIED TO EACH WATTLE.

INITIALLY APPLY 2 OUNCES OF ANIONIC OR NEUTRALLY CHARGED PAM OVER WATTLE WHERE WATER WILL FLOW AND 1 OUNCE OF PAM ON MATTING ON EACH SIDE OF WATTLE. REAPPLY PAM AFTER EVERY RAINFALL EVENT THAT IS EQUAL TO OR EXCEEDS 0.50 IN.

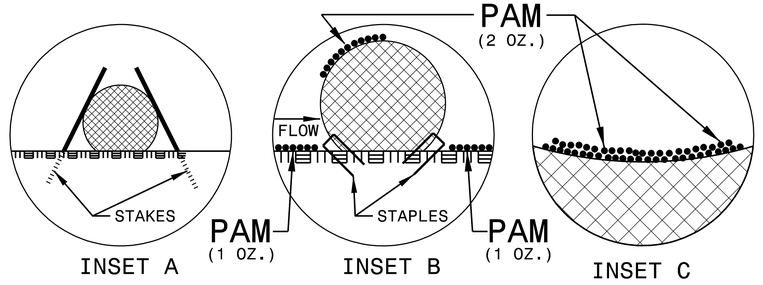

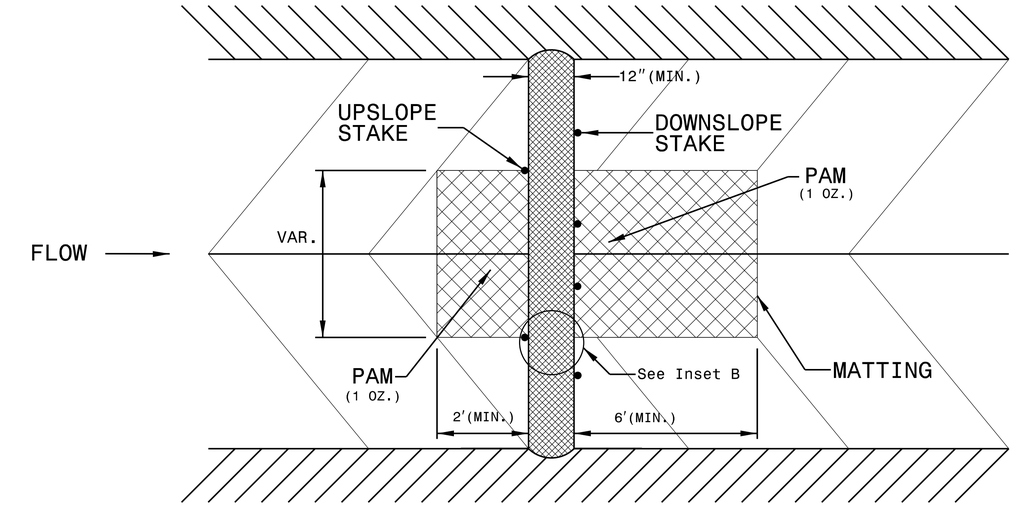

TOP VIEW

REVISIONS

8/17/99

9:14:30 AM
C:\pwworking\usnc\dms02030\U5914_EC_EC02A.dgn
RemiR

8/17/99

REVISIONS

PROJECT REFERENCE NO.	SHEET NO.
U-5914	EC-03

Prepared in the Office of: AECOM NC FIRM LICENSE No: F-0342 5438 Wade Park Boulevard, Suite 200 Raleigh, NC 27607 (919) 461-1100

DIVISION OF HIGHWAYS
STATE OF NORTH CAROLINA

SOIL STABILIZATION SUMMARY SHEET

MATTING FOR EROSION CONTROL

CONST SHEET NO.	LINE	FROM STATION	TO STATION	SIDE	ESTIMATE (SY)
5	-Y1-	12+00	14+50	RT	335
5	-Y1-	12+00	15+00	LT	400
		EXCELSIOR		SUBTOTAL	735
				SUBTOTAL	935
MISCELLANEOUS MATTING TO BE INSTALLED AS DIRECTED BY THE ENGINEER					1510
				TOTAL	2,445
				SAY	2,600

MATTING FOR EROSION CONTROL

CONST SHEET NO.	LINE	FROM STATION	TO STATION	SIDE	ESTIMATE (SY)
5	-L-	28+50	30+00	LT	200
		STRAW		SUBTOTAL	200

9:18:04 AM
C:\Projects\ng\usnc\dms02030\U5914_EC_EC03.dgn
Ramirez

PROJECT REFERENCE NO.	SHEET NO.
U-5914	EC-03A

Prepared in the Office of: AECOM NC FIRM LICENSE No: F-0342 5438 Wade Park Boulevard, Suite 200 Raleigh, NC 27607 (919) 461-1100

DIVISION OF HIGHWAYS
STATE OF NORTH CAROLINA

SOIL STABILIZATION TIMEFRAMES

SITE DESCRIPTION	STABILIZATION TIME	TIMEFRAME EXCEPTIONS
PERIMETER DIKES, SWALES, DITCHES AND SLOPES	7 DAYS	NONE
HIGH QUALITY WATER (HQW) ZONES	7 DAYS	NONE
SLOPES STEEPER THAN 3:1	7 DAYS	IF SLOPES ARE 10' OR LESS IN LENGTH AND ARE NOT STEEPER THAN 2:1, 14 DAYS ARE ALLOWED.
SLOPES 3:1 OR FLATTER	14 DAYS	7 DAYS FOR SLOPES GREATER THAN 50' IN LENGTH.
ALL OTHER AREAS WITH SLOPES FLATTER THAN 4:1	14 DAYS	NONE, EXCEPT FOR PERIMETERS AND HQW ZONES.

REVISIONS

8/17/99

9:21:24 AM
C:\pwworking\usnc\dms02030\U5914_EC_EC03A.dgn
RemiR

PROJECT REFERENCE NO.	SHEET NO.
U-5914	EC-04/CONST.04

Prepared in the Office of: AECOM NC FIRM LICENSE No: F-0342 5438 Wade Park Boulevard, Suite 200 Raleigh, NC 27607 (919) 461-1100

8/17/99

REVISIONS

ADT 2019
ADT 2039 (IN HUNDREDS)

-L- RIVER ROAD (NC 133)

251/355 — 43/61 — 19/27 — 227/321

SR 1551 (BLACKWELL ROAD) — 62/88

NOTE: UTILIZE FABRIC INSERT INLET PROTECTION DEVICES IN LIEU OF ROCK INLET SEDIMENT TRAPS TYPE C IN AREAS WHERE WATER MAY POND ON ROAD OPEN TO LIVE TRAFFIC.

NOTE: PLACE TEMPORARY ROCK SEDIMENT DAMS TYPE – B AND TEMPORARY ROCK SILT CHECKS TYPE – A AT DRAINAGE OUTLETS.

CLEARING AND GRUBBING EROSION CONTROL FOR CONSTRUCTION SHEET 4

Sta. 19+54.94
NC GRID NAD 83 NA 2011

-L- POT Sta. 10+00.00

MATCHLINE -L- STA. 19+50.00 SEE SHEET EC-05

NORTH CAROLINA STATE HWY COMM
MB Y PG 227
MB 2.5, PG 176
DB 59 PG 183
MB 129 P 89

BM-101 ELEVATION = 9.05'
N 175895 E 2305672
BL STATION 14+57.00 79 LEFT
R/R SPIKE SET IN 10" MAPLE

URBAN SMART GROWTH BELVILLE, LLC
DB 2851 PG 58
DB 2851 PG 111
DB 2851 PG 105
DB 277 PG 808

TOWN OF BELVILLE
DB 4657 P 376
MB 129 P 89
MB Y PG 227
MB 2.5, PG 176
DB 59 PG 183

215' STORAGE
150' CROWN POINT TRANSITION
156' TAPER
253' TAPER
300' TRANSITION
+14.38
+31.26
+74.00
+92.70
+84.46
36'
CROWN POINT
MATCH EXISTING EDGE OF TRAVEL

BEGIN TIP PROJECT U-5914
-L- Sta. 11+14.38

REMOVE AND REPLACE 2' OF EXISTING PAVEMENT ADJACENT TO PROPOSED CURB AND GUTTER

TIE TO BELVILLE TOWNHALL PROJECT

EST. 2 TONS CLASS B RIP RAP
EST. 8 SY GEOTEXTILE

BEGIN SAFETY RAIL -L- STA. 12+75.00

END SAFETY RAIL -L- STA. 14+50.00

DO NOT DISTURB EXIST. BRICK RETAINING WALL

EST. 1 TONS CLASS B RIP RAP
EST. 5 SY GEOTEXTILE

EST. 1 TON CLASS B RIP RAP
EST. 5 SY GEOTEXTILE

2'-6" C&G

10' MULTIUSE PATH

RIVER ROAD (NC 133) 120' PUBLIC R/W

RIVER ROAD (NC 133) NBL S 51°08'57.2" E

-L-

BELVILLE COMMONS POA, INC
DB 3683 PG 787
MB 91 PG 26

BELVILLE FUNDING LLC
DB 3605 PG 477
MB 91 PG 26

URBAN SMART GROWTH BELVILLE, LLC
DB 2851 PG 90
DB 277 PG 452

URBAN SMART GROWTH BELVILLE, LLC
DB 4062 PG 848

URBAN SMART GROWTH BELVILLE, LLC
DB 2851 PG 90
DB 277 PG 452

BILLBOARD
URBAN SMART GROWTH BELVILLE, LLC
DB 2851 PG 90
MB Y PG 227

60' ACCESS EASEMENT
DB 1458 PG 136

100' PROGRESS ENERGY RIGHT-OF-WAY

RETENTION POND

SR1551 BLACKWELL ROAD

8" PVC

-BL- 102

-BL- 101

N 87°51'33" W 456.84'

N 51°04'54" W 202.53'

N 39°24'36" W 293.94'

S 61°20'24" W 180.46'

N 66°22'48" W 297.78'

N 01°22'48" W 316.08'

N 89°02'52" W 118.55'

N 00°26'00" E 232.53'

S 87°50'23" E 56.77'

S 66°24'17" W 100.42'

S 38°53'09" W 214.95'

S 40°38'32" W 242.29'

N 87°51'33" W 456.84'

PROJECT REFERENCE NO.	SHEET NO.
U-5914	EC-04/CONST.04

Prepared in the Office of: AECOM NC FIRM LICENSE No: F-0342 5438 Wade Park Boulevard, Suite 200 Raleigh, NC 27607 (919) 461-1100

8/17/99

REVISIONS

ADT 2019
ADT 2039 (IN HUNDREDS)

–L– RIVER ROAD (NC 133)

251/355 | 43/61 | 19/27 | 227/321

SR 1551 (BLACKWELL ROAD) 62/88

NOTE: UTILIZE FABRIC INSERT INLET PROTECTION DEVICES IN LIEU OF ROCK INLET SEDIMENT TRAPS TYPE C IN AREAS WHERE WATER MAY POND ON ROAD OPEN TO LIVE TRAFFIC.

NOTE: PLACE TEMPORARY ROCK SEDIMENT DAMS TYPE – B AND TEMPORARY ROCK SILT CHECKS TYPE – A AT DRAINAGE OUTLETS.

CLEARING AND GRUBBING EROSION CONTROL FOR CONSTRUCTION SHEET 4

Sta. 19+54.94
NC GRID NAD 83 NA 2011

–L– POT Sta. 10+00.00

MATCHLINE –L– STA. 19+50.00 SEE SHEET EC-05

BEGIN TIP PROJECT U-5914
–L– Sta. 11+14.38

REMOVE AND REPLACE 2' OF EXISTING PAVEMENT ADJACENT TO PROPOSED CURB AND GUTTER

TIE TO BELVILLE TOWNHALL PROJECT

EST. 2 TONS CLASS B RIP RAP
EST. 8 SY GEOTEXTILE

BEGIN SAFETY RAIL –L– STA. 12+75.00

END SAFETY RAIL –L– STA. 14+50.00

DO NOT DISTURB EXIST. BRICK RETAINING WALL

MATCH EXISTING EDGE OF TRAVEL

215' STORAGE
150' CROWN POINT TRANSITION
156' TAPER
253' TAPER
300' TRANSITION

CROWN POINT

RIVER ROAD (NC 133) NBL S 51°08'57.2" E
VARIABLE BST 120" PUBLIC R/W
RIVER ROAD (NC 133) SBL

RIVER ROAD (NC 133) 120' PUBLIC R/W

10' MULTIUSE PATH

2'–6" C&G

EST. 1 TONS CLASS B RIP RAP
EST. 5 SY GEOTEXTILE

EST. 1 TON CLASS B RIP RAP
EST. 5 SY GEOTEXTILE

BM-101 ELEVATION = 9.05'
N 175895 E 2305672
BL STATION 14+57.00 79 LEFT
R/R SPIKE SET IN 10" MAPLE

NORTH CAROLINA STATE HWY COMM
MB Y PG 227
MB 2.5, PG 176
DB 59 PG 183
MB 129 P 89

URBAN SMART GROWTH BELVILLE, LLC
DB 2851 PG 58
DB 2851 PG 111
DB 2851 PG 105
DB 277 PG 808

TOWN OF BELVILLE
DB 4657 P 376
MB 129 P 89
MB Y PG 227
MB 2.5, PG 176
DB 59 PG 183

BELVILLE COMMONS POA, INC
DB 3683 PG 787
MB 91 PG 26

BELVILLE FUNDING LLC
DB 3605 PG 477
MB 91 PG 26

URBAN SMART GROWTH BELVILLE, LLC
DB 2851 PG 90
DB 277 PG 452

URBAN SMART GROWTH BELVILLE, LLC
DB 4062 PG 848

URBAN SMART GROWTH BELVILLE, LLC
DB 2851 PG 90
DB 277 PG 452

BILLBOARD
URBAN SMART GROWTH BELVILLE, LLC
DB 2851 PG 90
MB Y PG 227

60' ACCESS EASEMENT
DB 1458 PG 1361

100' PROGRESS ENERGY RIGHT-OF-WAY

RETENTION POND

RETAIN

WOODS

-BL- 102

-BL- 101

-L-

-L1-

8" PVC

30" C&G (CONC)

2'-6" C&G

EXISTING R/W

3:23:50 PM
C:\Projects\ing\usnc\dms02030\U5914_EC_psh4.dgn

PROJECT REFERENCE NO.	SHEET NO.
U-5914	EC-05/CONST.05

Prepared in the Office of: AECOM — NC FIRM LICENSE No: F-0342, 5438 Wade Park Boulevard, Suite 200, Raleigh, NC 27607, (919) 461-1100

8/17/99

REVISIONS

MATCHLINE –L– STA. 19+50.00 SEE SHEET EC-04

ADT 2019 / ADT 2039 (IN HUNDREDS)

–Y1– OLD RIVER ROAD: 21/28

–L– RIVER ROAD (NC 133): 227/321; 15/20; 6/8; 218/309

NAD 83 NC GRID NA 2011

CLEARING AND GRUBBING EROSION CONTROL FOR CONSTRUCTION SHEET 5

NOTE: UTILIZE FABRIC INSERT INLET PROTECTION DEVICES IN LIEU OF ROCK INLET SEDIMENT TRAPS TYPE C IN AREAS WHERE WATER MAY POND ON ROAD OPEN TO LIVE TRAFFIC.

NOTE: PLACE TEMPORARY ROCK SEDIMENT DAMS TYPE – B AND TEMPORARY ROCK SILT CHECKS TYPE – A AT DRAINAGE OUTLETS.

END CONSTRUCTION –Y1– Sta. 16+36.11

PC Sta. 15+67.32

PT Sta. 13+67.44

BEGIN CULVERT 14+17.60

END CULVERT 14+02.53

N 24° 10' 04.3" W

ALTERNATIVE GUARDRAIL POST SPACING SEE STD. 862.01

EST. 30 TONS CLASS I RIP RAP
EST. 50 SY GEOTEXTILE

+44.70 –Y1– 88.50' RT

+58.26 –Y1– EX. R/W

+52.11 –Y1– EX. R/W & 70.00' RT

+85.11 –Y1– EX. R/W & 70.00' RT

+06.41 –Y1– 96.73' RT & EX. R/W

+86.11

50' TAPER

24' TYP.

4' FDPS

2 @ 7'x6' RCBC w/1' BURIED SEE DETAIL 2

REMOVE CHANNEL TIE

REMOVE 15" RCP

REMOVE CONC. HEADWALL

66" RCP-IV BURIED 1'

15" RCP-IV

18" RCP-IV

24" RCP-IV

CB

DI

JB

MH

CONC RW MON

WOODS

EXISTING R/W

–L– RIVER ROAD (NC 133)

SR 1554 OLD RIVER ROAD –Y1–

10' MULTIUSE PATH

2'-6" C&G

300' TRANSITION

200' STORAGE

300' STORAGE

100' TAPER

300' TAPER

EST. 48 TONS CLASS I RIP RAP
EST. 89 SY GEOTEXTILE

TOP=9.78' INV=6.66'

TOP=7.47' INV=1.05'

TOP=7.5' INV=1.59'

TOP=8.77' INV=3.0'

TOP=6.99' INV=1.07'

TOP=8.27' INV=0.48'

TOP=9.90' INV=-0.59'

TOP=8.67' INV=-1.38'

INV=5.55'

INV=0.03'

INV=2.08'

INV=3.50'

BEGIN SAFETY RAIL –L– STA. 20+75.00

END SAFETY RAIL –L– STA. 25+00.00

–L– POT Sta.24+55.29 = –Y1– POT Sta. 10+00.00

–L– POT Sta. 30+00.00

PC Sta. 10+82.19

N 22°15'45.6" E

S 51°08'57.2" E

N 75°35'57" W 1016.38'

SPECIAL LATERAL V DITCH SEE DETAIL 1

SPECIAL LATERAL V DITCH SEE DETAIL 3

EIR & CAP 0.56' OUTSIDE R/W

TURN LANE AND MUP BY OTHERS

RIVER ROAD (NC 133) 31' BST
120' PUBLIC R/W

8" PVC

-BL- 100

END TIP PROJECT U-5914
–L– Sta. 29+58.46

8 NORTH CAROLINA STATE HWY COMM
DB 59 PG 183
MB 2.5 PG 176
MB 129 P 89

7 TOWN OF BELVILLE
DB 4657 P 376
MB 129 P 89
MB Y PG 227
MB 2.5, PG 176
DB 59 PG 183

6 NORTH CAROLINA STATE HWY COMM
DB 59 PG 183
MB 2.5 PG 176
MB 129 P 89

5 TOWN OF BELVILLE
DB 4657 P 376
MB 129 P 89
MB Y PG 227
MB 2.5, PG 176
DB 59 PG 183

4 URBAN SMART GROWTH BELVILLE, LLC
DB 285/PG 90
MB Y PG 227

2 URBAN SMART GROWTH BELVILLE, LLC
DB 285/PG 90
DB 277 PG 452

TOWN OF BELVILLE
DB 4657 P 376
MB 129 P 89
MB Y PG 227
MB 2.5, PG 176
DB 59 PG 183

MONICA C. WATSON
DB 829 PG 937

BOUNDARY IS THE NORMAL HIGH WATERLINE AS ESTABLISHED BY MB 129 P89

DETAIL 2

NATURAL GROUND; PROP EXCAVATION EST. 10 CY DDE; 3:1; BACKFILL CULVERT WITH NATIVE MATERIAL PER SPEC.

INLET CHANNEL LOOKING DOWNSTREAM (NOT TO SCALE)

*QTY FOR RIP RAP LIMITS ONLY.

PROP EXCAVATION EST. 22 CY DDE; T=15"; RIP RAP CLASS I; NATURAL GROUND; 3:1; BACKFILL CULVERT WITH NATIVE MATERIAL PER SPEC.

OUTLET CHANNEL LOOKING UPSTREAM (NOT TO SCALE)

–Y1– STA. 14+10

DETAIL 1
SPECIAL LATERAL 'V' DITCH
(Not to Scale)

Natural Ground; 3:1; D; 4:1 or Flatter; Fill Slope; Min. D= 1.5 Ft.

FROM –L– STA. 25+00 LT TO –L– STA. 29+50 LT

DETAIL 3
SPECIAL LATERAL 'V' DITCH
(Not to Scale)

Natural Ground; 2:1 or Flatter; D; 2:1 or Flatter; Fill Slope; Min. D= 1.5 Ft.

FROM –L– STA. 24+95 RT TO –L– STA. 27+50 RT

–Y1–
PI Sta 12+33.17
Δ = 46° 25' 49.9" (LT)
D = 16° 16' 38.0"
L = 285.25'
T = 150.98'
R = 352.00'
e = 4%

PI Sta 17+60.35
Δ = 11° 36' 08.8" (RT)
D = 3° 00' 56.0"
L = 384.75'
T = 193.04'
R = 1,900.00'

SPECIAL DETAIL REQUIRED FOR CB 0401, 0402, AND 0404 TO ALLOW 1.5' MIN. DEPTH RATHER THAN 1.75'.

8:27:43 AM
C:\Projects\Existing\usnc\dms02030\U5914_EC_pshs.dgn
Ramirez

PROJECT REFERENCE NO.	SHEET NO.
U-5914	EC-05A/CONST.05

Prepared in the Office of: AECOM NC FIRM LICENSE No: F-0342 5438 Wade Park Boulevard, Suite 200 Raleigh, NC 27607 (919) 461-1100

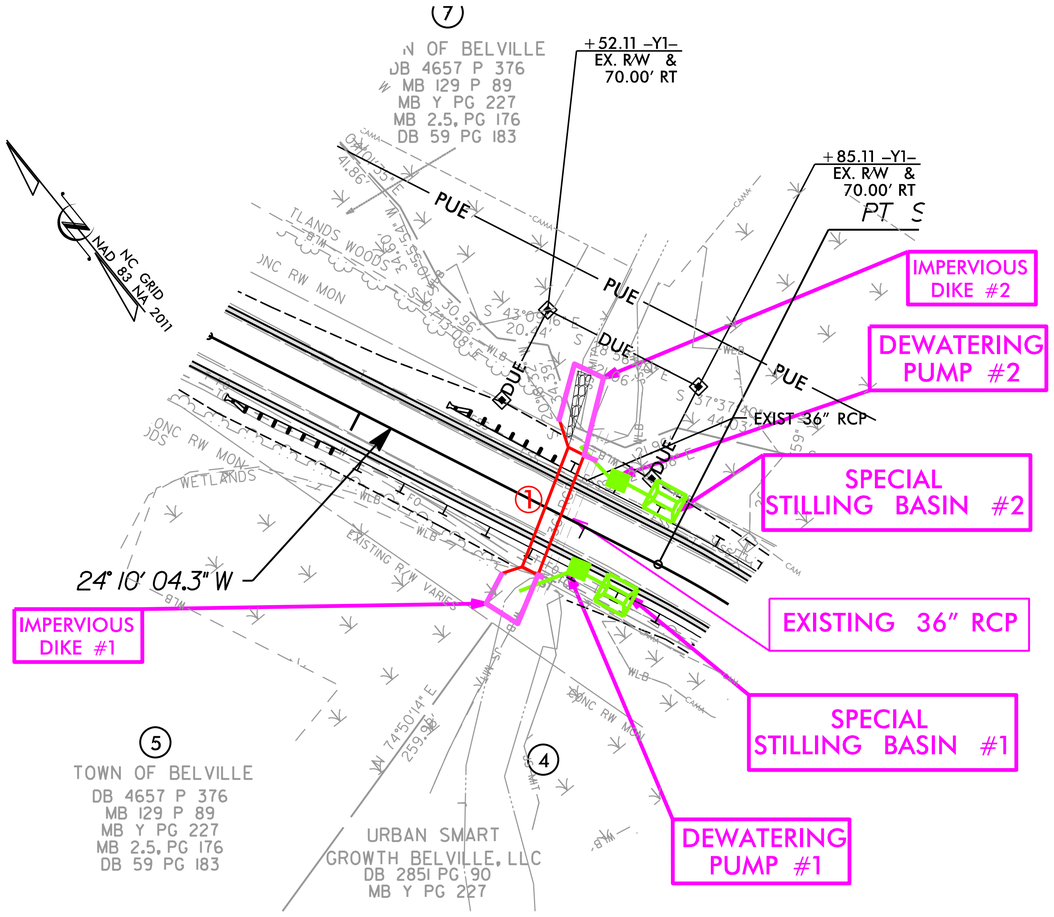

CONSTRUCTION SEQUENCE STA. 14+10 -Y1- FOR DUAL BARREL 7' X 6' RCBC

PHASE I

1. INSTALL IMPERVIOUS DIKES #1, #2, SPECIAL STILLING BASINS #1 AND #2, DEWATERING PUMPS #1 AND #2.
2. WHILE MAINTAINING FLOW IN THE EXISTING 36" RCP, CONSTRUCT 7' X 6' RCBC BARREL #1 AND OUTLET STABILIZATION AS SHOWN. USE DEWATERING PUMPS AS NEEDED TO MAINTAIN DRY WORK AREA.

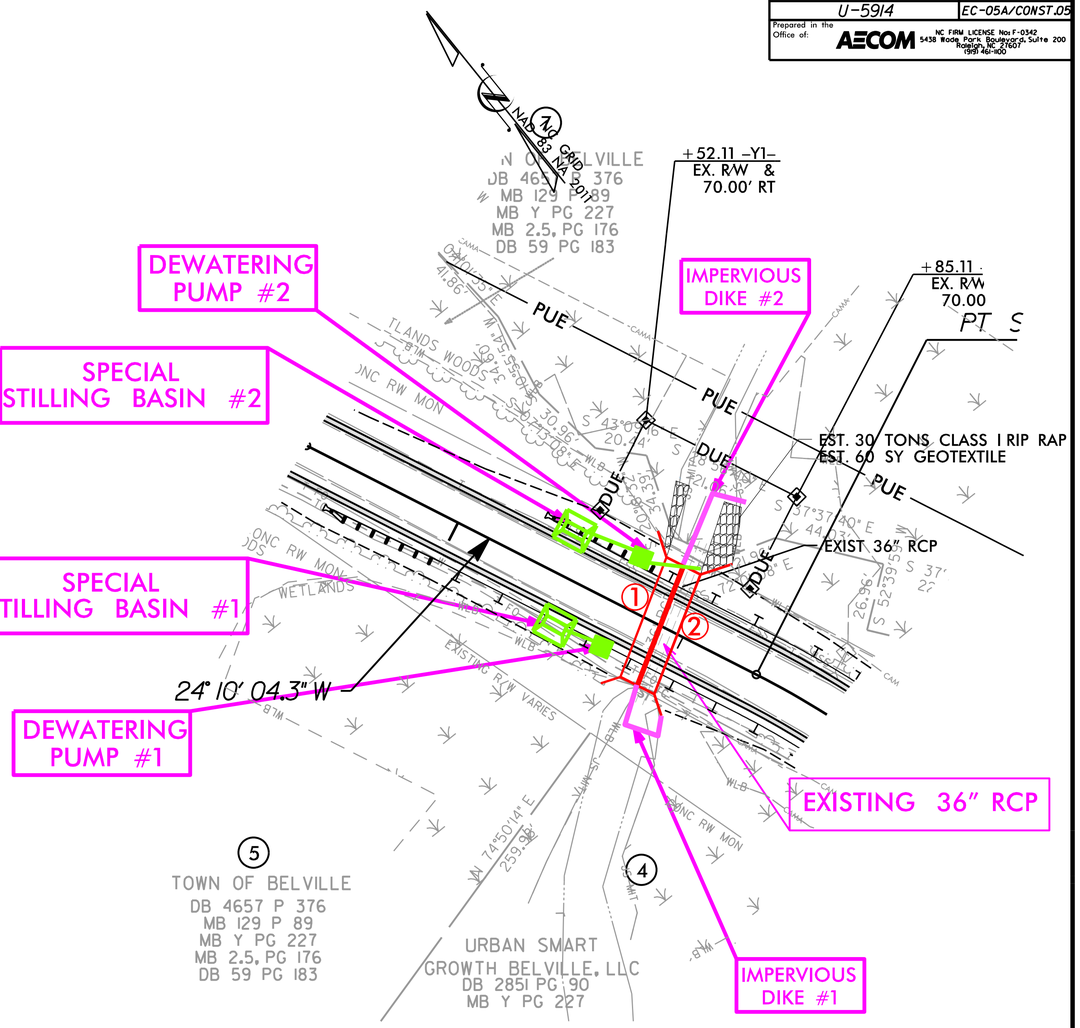

CONSTRUCTION SEQUENCE STA. 14+10 -Y1- FOR DUAL BARREL 7' X 6' RCBC

PHASE II

1. MODIFY IMPERVIOUS DIKES #1 AND #2 TO DIVERT FLOW INTO THE NEWLY CONSTRUCTED RCBC BARREL #1.
2. REMOVE THE EXISTING 36" RCP.
3. RELOCATE SPECIAL STILLING BASINS #1 AND #2 AND DEWATERING PUMPS #1 AND #2.
4. WHILE MAINTAINING FLOW THROUGH THE NEWLY CONSTRUCTED RCBC BARREL #1, CONSTRUCT 7'X 6' RCBC BARREL #2 AND OUTLET STABILIZATION AS SHOWN. USE DEWATERING PUMPS AS NEEDED TO MAINTAIN DRY WORK AREA.
5. REMOVE IMPERVIOUS DIKES #1 AND #2, SPECIAL STILLING BASINS #1 AND #2 AND DEWATERING PUMPS #1 AND #2.
6. COMPLETE ROADWAY.

REVISIONS

8/17/99

9:30:47 AM
C:\pwworking\usnc\dms02030\U5914_EC_psh5A.dgn

PROJECT REFERENCE NO.	SHEET NO.
U-5914	EC-05B/CONST.05

Prepared in the Office of: AECOM NC FIRM LICENSE No: F-0342 5438 Wade Park Boulevard, Suite 200 Raleigh, NC 27607 (919) 461-1100

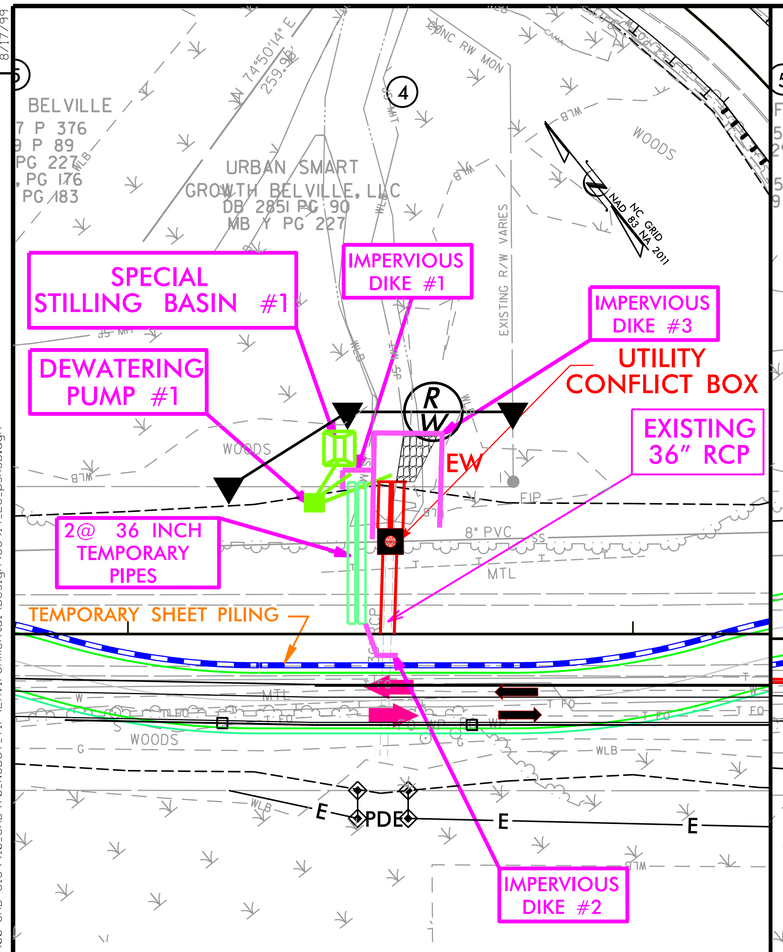

CONSTRUCTION SEQUENCE STA. 22+08 –L– FOR 66" RCP

PHASE I

1. SHIFT TRAFFIC ONTO THE TEMPORARY DETOUR ON THE SOUTH SIDE OF THE ROAD.
2. INSTALL IMPERVIOUS DIKE #1.
3. INSTALL TEMPORARY PIPES. USE DEWATERING PUMP AS NEEDED TO MAINTAIN DRY WORK AREA.
4. REMOVE IMPERVIOUS DIKE #1 AND DEWATERING HOSE.
4. DIVERT FLOW INTO THE TEMPORARY PIPES.
5. INSTALL IMPERVIOUS # 3. REMOVE A SECTION OF THE EXISTING 36" RCP FROM THE OUTLET END UP TO THE TEMPORARY SHEET PILING.
6. INSTALL IMPERVIOUS DIKE #2, SPECIAL STILLING BASIN #1, AND DEWATERING PUMP #1.
7. CONSTRUCT THE DUAL 54" RCP WITH ASSOCIATED EW, THE JUNCTION BOX, A SECTION OF THE 66" RCP FROM THE JUNCTION BOX TO IMPERVIOUS DIKE #2, AND THE EASTERN BANK OUTLET STABILIZATION AS SHOWN. USE DEWATERING PUMP AS NEEDED TO MAINTAIN DRY WORK AREA.
8. CONSTRUCT DETOUR ON NORTH SIDE OF ROAD.

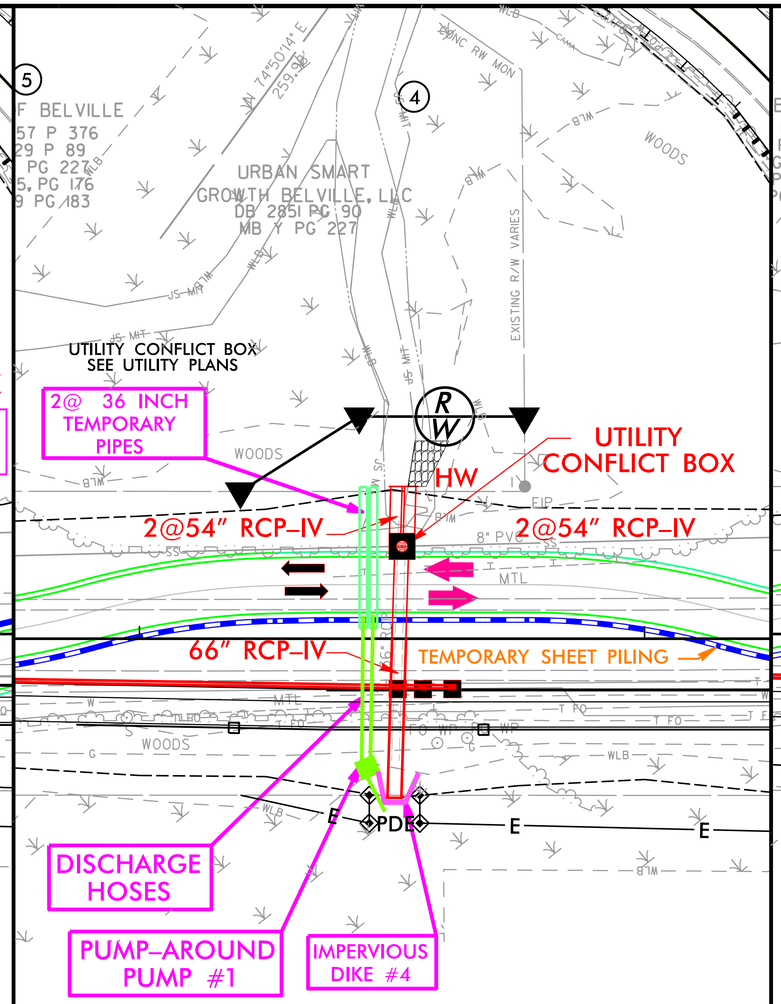

CONSTRUCTION SEQUENCE STA. 22+08 –L– FOR 66" RCP

PHASE II

1. SHIFT TRAFFIC ONTO THE TEMPORARY DETOUR ON THE NORTH SIDE OF THE ROAD.
2. INSTALL PUMP AROUND PUMP #1 AND CONNECTING HOSES.
3. REMOVE IMPERVIOUS DIKES #2 AND #3 FROM PHASE I AND INSTALL IMPERVIOUS DIKE #4.
4. REMOVE THE REMAINING SECTION OF THE EXISTING 36" RCP.
5. CONSTRUCT THE REMAINING SECTION OF THE 66" RCP AND THE ASSOCIATED DRAINAGE SYSTEM.

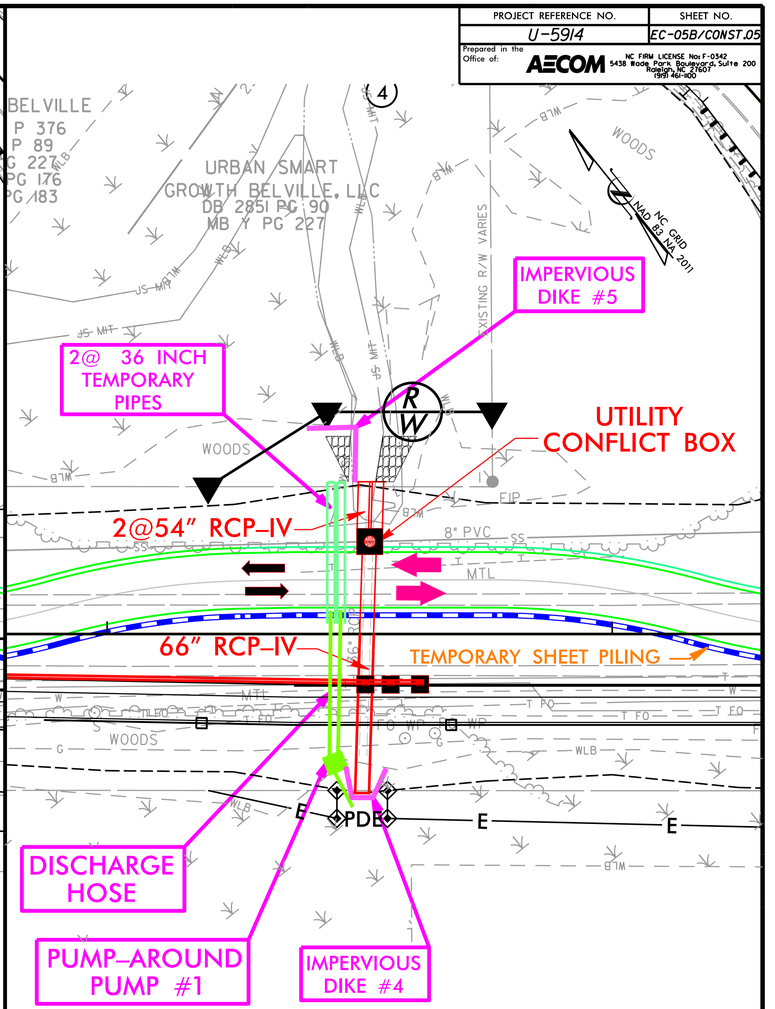

CONSTRUCTION SEQUENCE STA. 22+08 –L– FOR 66" RCP

PHASE III

1. REMOVE IMPERVIOUS DIKE #4, PUMP AROUND #1 AND DISCHARGE HOSES, AND DIVERT FLOW INTO THE 66" RCP.
2. FILL THE EXISTING TEMPORARY PIPES.
4. INSTALL IMPERVOIUS DIKE #5 AND CONSTRUCT THE WESTERN OUTLET BANK STABILIZATION.
5. REMOVE IMPERVIOUS DIKE #5.
6. COMPLETE ROADWAY.

REVISIONS

8/17/99

3:34:37 PM
pw:\\aecom-na-pw.bentley.com:AECOM_USA_North_Carolina\Documents\60512233-U-5914 - NC 133\900-CAD GIS\910_CAD\70_NCDOT_TIP\Environmental\Design\U5914_EC_psh5B.dgn
RemiR

PROJECT REFERENCE NO.	SHEET NO.
U-5914	EC-06/CONST.04

Prepared in the Office of: AECOM — NC FIRM LICENSE No: F-0342, 5438 Wade Park Boulevard, Suite 200, Raleigh, NC 27607, (919) 461-1100

8/17/99

REVISIONS

ADT 2019 (IN HUNDREDS)
ADT 2039 (IN HUNDREDS)

–L– RIVER ROAD (NC 133)

251 / 355	43 / 61	19 / 27	227 / 321

SR 1551 (BLACKWELL ROAD) — 62 / 88

NOTE: UTILIZE FABRIC INSERT INLET PROTECTION DEVICES IN LIEU OF ROCK INLET SEDIMENT TRAPS TYPE C IN AREAS WHERE WATER MAY POND ON ROAD OPEN TO LIVE TRAFFIC.

Place Matting for Erosion Control on Slope as Work Allows.
Sta. 12+50 Rt to Sta. 15+50 Rt

NC GRID NAD 83 NA 2011

BEGIN TIP PROJECT U-5914
–L– Sta. 9+88.09

–L– POT Sta. 9+00.00

–L– POT Sta. 13+97.29

–L– Sta. 10+00.00

–ELI– POT Sta. 10+00.00 =
–ELI– POT Sta. 36+00.00 (8.79' RT.)

–Y2– PT Sta. 10+00.00

–Y2– PT Sta. 12+61.41

–Y2– PT Sta. 23+15.63

–ELI– POT Sta. 35+87.50 =

–EL– PT Sta. 41+36.98

–BL– 101

–BL– 102

–L– Sta. 14+38

+31.26

+74.00

+84.46

+92.70

215' STORAGE
150' CROWN POINT TRANSITION
156' TAPER
253' TAPER
300' TRANSITION

CROWN POINT

2'R

30' R

S 51°08' 57.2" E

S 51°08'57" E

S 51°47'08" E

N 51°04'54" W 202.53'

N 57°42'52" E

RIVER ROAD (NC 133) NBL

RIVER ROAD (NC 133) SBL

VARIABLE BST 120' PUBLIC R/W

RIVER ROAD (NC 133) 120' PUBLIC R/W

10' MULTIUSE PATH

2'–6" C&G

4' PS

4' DPS

REMOVE AND REPLACE 2' OF EXISTING PAVEMENT ADJACENT TO PROPOSED CURB AND GUTTER

–Y2– PT Sta. 12+61.41

EST. 2 TONS CLASS B RIP RAP
EST. 8 SY GEOTEXTILE

BEGIN SAFETY RAIL
–L– STA. 12+75.00

END SAFETY RAIL
–L– STA. 14+50.00

DO NOT DISTURB EXIST. BRICK RETAINING WALL

MATCH EXISTING EDGE OF TRAVEL

BEGIN C&G
–L– STA. 10+97.12

TIE TO BELVILLE TOWNHALL PROJECT

RETAIN

+50.00 EX. R/W

+30.00 EX. R/W

+11.00 EX. R/W & 72.00' RT

+94.00 EX. R/W & 72.00' RT

+72.00 EX. R/W & 69.00' RT

+92.00 EX. R/W & 69.00' RT

EST. 1 TONS CLASS B RIP RAP
EST. 5 SY GEOTEXTILE

EST. 1 TON CLASS B RIP RAP
EST. 5 SY GEOTEXTILE

MATCHLINE –L– STA. 19+50.00 SEE SHEET EC–07

NORTH CAROLINA STATE HWY COMM
MB Y PG 227
MB 2.5, PG 176
DB 59 PG 183
MB 129 P 89

BM-101 ELEVATION = 9.05'
N 175895 E 2305672
BL STATION 14+57.00 79 LEFT
R/R SPIKE SET IN 10" MAPLE

TOWN OF BELVILLE
DB 4657 P 376
MB 129 P 89
MB Y PG 227
MB 2.5, PG 176
DB 59 PG 183

BROWNING MICHELLE L
DB 1681 PG 200
PB 27, PG 62

BROWNING WILLIAM H ET
BROWNING GLENDA
DB 3604, PG 877
PB 27, PG 62

THE PANTRY INC
DB 3683, PG 776
MB 91 PG 26
MB 91PG 27

BELVILLE COMMONS POA, INC
DB 3683 PG 787
MB 91 PG 26

URBAN SMART GROWTH BELVILLE, LLC
DB 285I PG III
DB 285I PG 105
DB 277 PG 452

URBAN SMART GROWTH BELVILLE, LLC
DB 285I PG 90
DB 277 PG 452

URBAN SMART GROWTH BELVILLE, LLC
DB 4062 PG 848

URBAN SMART GROWTH BELVILLE, LLC
DB 285I PG 90
MB Y PG 227

TOWN OF BELVILLE
DB 3858 PG 1294
MB 91 PG 26

DATUM DESCRIPTION

THE LOCALIZED COORDINATE SYSTEM DEVELOPED FOR THIS PROJECT IS BASED ON THE STATE PLANE COORDINATES ESTABLISHED BY NCGS FOR MONUMENT "MCDONALDS"
WITH NAD 83/NSRS 2007 STATE PLANE [illegible]
NORTHING: 162378.787(ft) EASTING: 2322247.834(ft)
ELEVATION: 43.32'(ft)
THE AVERAGE COMBINED GRID FACTOR USED ON THIS PROJECT

–Y2–
PI Sta 11+35.60
Δ = 37° 27' 10.3" (LT)
D = 14° 19' 26.2"
L = 261.47'
T = 135.60'
R = 400.00'

9:37:02 AM
C:\Projects\ncdot-ecing\usnc\dms020230\U5914_EC_psh6.dgn

PROJECT REFERENCE NO.	SHEET NO.
U-5914	EC-07/CONST.05

Prepared in the Office of: AECOM — NC FIRM LICENSE No: F-0342, 5438 Wade Park Boulevard, Suite 200, Raleigh, NC 27607, (919) 461-1100

8/17/99

REVISIONS

MATCHLINE –L– STA. 19+50.00 SEE SHEET EC-04

ADT 2019
ADT 2039 (IN HUNDREDS)

–Y1– OLD RIVER ROAD: 21/28

–L– RIVER ROAD (NC 133): 227/321 — 15/20 — 6/8 — 218/309

Place Matting for Erosion Control on Slope as Work Allows.
Sta. 12+00 RT to Sta. 14+50 RT
Sta. 12+00 LT to Sta. 15+00 LT

Place Matting for Erosion Control on Slopes Adjacent to Permitted Wetlands as Work Allows.

NAD 83 NC GRID NA 2011

NOTE: UTILIZE FABRIC INSERT INLET PROTECTION DEVICES IN LIEU OF ROCK INLET SEDIMENT TRAPS TYPE C IN AREAS WHERE WATER MAY POND ON ROAD OPEN TO LIVE TRAFFIC.

DETAIL 2

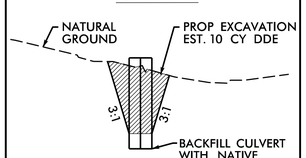

INLET CHANNEL
LOOKING DOWNSTREAM
(NOT TO SCALE)

*QTY FOR RIP RAP LIMITS ONLY.

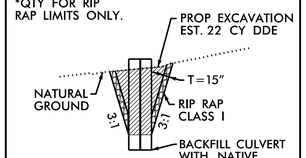

OUTLET CHANNEL
LOOKING UPSTREAM
(NOT TO SCALE)

–Y1– STA. 14+10

8 NORTH CAROLINA STATE HWY COMM
DB 59 PG 183
MB 2.5 PG 176
MB 129 P 89

END CONSTRUCTION
–Y1– Sta. 16+36.11

BOUNDARY IS THE NORMAL HIGH WATERLINE AS ESTABLISHED BY MB 129 P89

PC Sta. 15+67.32

7 TOWN OF BELVILLE
DB 4657 P 376
MB 129 P 89
MB Y PG 227
MB 2.5, PG 176
DB 59 PG 183

ALTERNATIVE GUARDRAIL POST SPACING SEE STD. 862.01

EST. 30 TONS CLASS I RIP RAP
EST. 50 SY GEOTEXTILE

PT Sta. 13+67.44

6 NORTH CAROLINA STATE HWY COMM
DB 59 PG 183
MB 2.5 PG 176
MB 129 P 89

BOUNDARY IS THE NORMAL HIGH WATERLINE AS ESTABLISHED BY MB 129 P89

N 24° 10' 04.3" W

BEGIN CULVERT 14+17.60

2 @ 7'x6' RCBC w/1' BURIED SEE DETAIL 2

CHANNEL TIE-IN

REMOVE

END CULVERT 14+02.53

5 TOWN OF BELVILLE
DB 4657 P 376
MB 129 P 89
MB Y PG 227
MB 2.5, PG 176
DB 59 PG 183

4 URBAN SMART GROWTH BELVILLE, LLC
DB 285 PG 90
MB Y PG 227

SR 1554 –Y1– OLD RIVER ROAD

300' TRANSITION

200' STORAGE

EST. 48 TONS CLASS I RIP RAP
EST. 89 SY GEOTEXTILE

UNDERGROUND UTILITY CONFLICT BOX SEE SHEET 2A

–L– RIVER ROAD (NC 133)

10' MULTIUSE PATH

2'-6" C&G

BEGIN SAFETY RAIL –L– STA. 20+75.00

2 URBAN SMART GROWTH BELVILLE, LLC
DB 285 PG 90
DB 277 PG 452

–L– POT Sta. 24+55.29 = –Y1– POT Sta. 10+00.00

PC Sta. 10+82.19

N 22° 15' 45.6" E

300' STORAGE

–U5914– 2

TIE TO EXISTING DITCH

50'R

5'R

50'R

S 51° 08' 57.2" E

66" RCP-IV BURIED 1'

END SAFETY RAIL –L– STA. 25+00.00

EST. 2 TON CLASS B RIP RAP
EST. 7 SY GEOTEXTILE

SPECIAL LATERAL V DITCH SEE DETAIL 3

TURN LANE AND MUP BY OTHERS

300' TAPER

MONICA C. WATSON
DB 829 PG 937

SPECIAL LATERAL V DITCH SEE DETAIL 1

100' TAPER

TIE TO EXISTING DITCH

RETAIN

–L– POT Sta. 30+00.00

END TIP PROJECT U-5914
–L– Sta. 29+58.46

RIVER ROAD (NC 133) 31' BST
120' PUBLIC R/W

–BL– 100

TOWN OF BELVILLE
DB 4657 P 376
MB 129 P 89
MB Y PG 227
MB 2.5, PG 176
DB 59 PG 183

N 75°35'57" W
1016.38

SPECIAL DETAIL REQUIRED FOR CB 0401, 0402, AND 0404 TO ALLOW 1.5' MIN. DEPTH RATHER THAN 1.75'.

–Y1–
PI Sta 12+33.17
Δ = 46° 25' 49.9" (LT)
D = 16° 16' 38.0"
L = 285.25'
T = 150.98'
R = 352.00'
e = 4%

PI Sta 17+60.35
Δ = 11° 36' 08.8" (RT)
D = 3° 00' 56.0"
L = 384.75'
T = 193.04'
R = 1,900.00'

DETAIL 1
SPECIAL LATERAL 'V' DITCH
(Not to Scale)

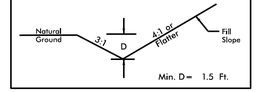

FROM –L– STA. 25+00 LT TO –L– STA. 29+50 LT

DETAIL 3
SPECIAL LATERAL 'V' DITCH
(Not to Scale)

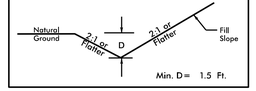

FROM –L– STA. 24+95 RT TO –L– STA. 27+50 RT

8:40:16 AM
C:\Projects\ncdot\ncdot_working\usnc\dms02030\U5914_EC_psh7.dgn
Roadway Design

DocuSign Envelope ID: 003C34F1-0EDF-417E-949A-4137107624CD

TIP PROJECT: U-5914

CONTRACT: DC00424

Project No.	Sheet No.
U-5914	Sig. 1.0

STATE OF NORTH CAROLINA
DIVISION OF HIGHWAYS

BRUNSWICK COUNTY



DOCUMENT NOT CONSIDERED FINAL UNLESS ALL SIGNATURES COMPLETED

LOCATION: NC 133 FROM SR 1551 (BLACKWELL ROAD) TO SR 1554 (OLD RIVER ROAD) EAST OF OLD RIVER

TYPE OF WORK: TRAFFIC SIGNALS

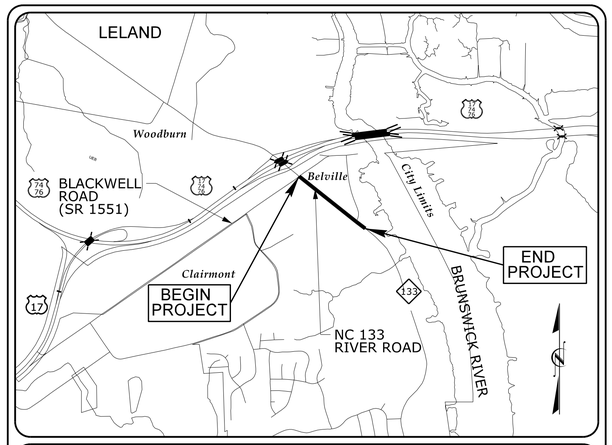

VICINITY MAP
NOT TO SCALE

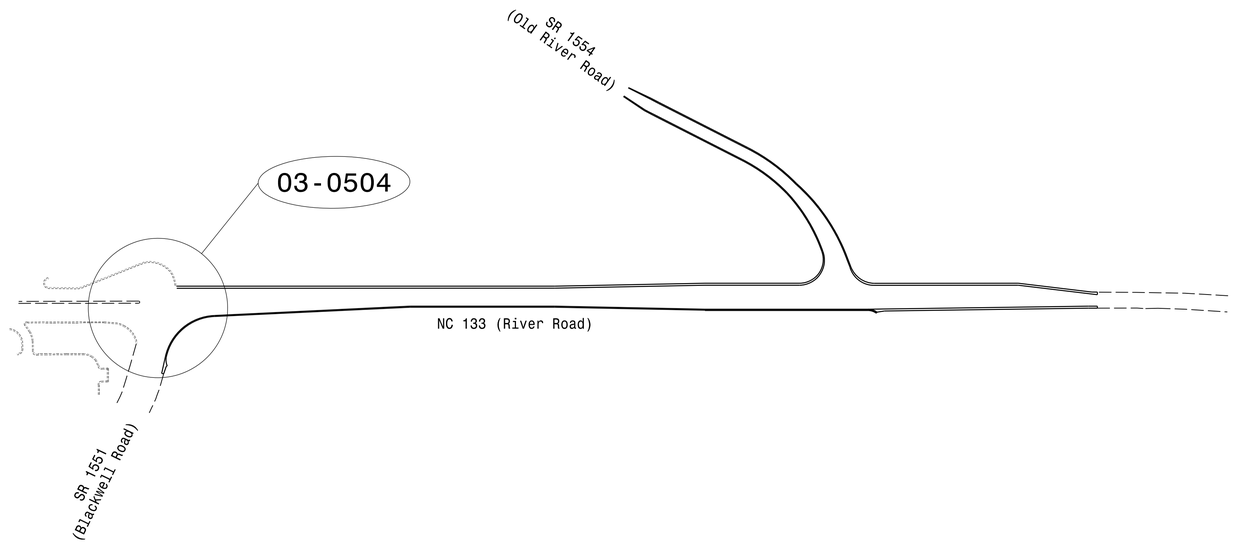

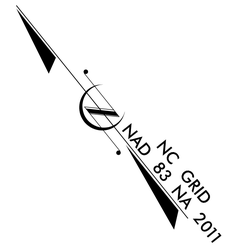



DocuSigned by:
Hemang M. Surti 3/27/2023
AF12BB053TA5481...

AECOM
NC Firm License No.: F-0342
5438 Wade Park Boulevard
Suite 200 Raleigh, NC 27607
Phone: 919-461-1100

Refer to "Roadway Standard Drawings NCDOT" dated January 2018 and "Standard Specifications for Roads and Structures" dated January 2018.

Index of Plans

Sheet #	Reference #	Location/Description
Sig. 1.0	N/A	Project Titlesheet
Sig. 1.1 – 1.2	N/A	2018 Standard Plate Sheets
Sig. 2.0 – 3.6	03-0504	NC 133 (River Road) at SR 1551 (Blackwell Road)
Sig. M1 – M8	N/A	Standard Metal Pole Sheets

NCDOT TRANSPORTATION SYSTEMS MANAGEMENT & OPERATIONS UNIT

Contacts:

Zachary Little, PE – Eastern Region Signals Engineer
Keith M. Mims, PE – Signal Equipment Design Engineer

AECOM

Contact:

Hemang M. Surti, PE – NC Signals & ITS Lead

Prepared for the Office of:
DIVISION OF HIGHWAYS
TRANSPORTATION MOBILITY AND SAFETY DIVISION

Transportation Mobility and Safety Division
North Carolina Department of Transportation
ITS and Signals Unit

750 N. Greenfield Parkway, Garner, NC 27529

3/27/2023
e:\projects.com-ne-pw.bentley.com:AECOM_USA_North_Carolina\Documents\60512233-U-5914 - NC 133\900-CAD GIS\910_CADD\70_NCDOT_TIP\Traffic\Signals\Design\Signals\U-5914_sig_tsh.dgn
mitchell.cavenaugh

DocuSign Envelope ID: EC232C59-1224-4D0C-B3D3-A4E7F3BA38C6

PROJECT NO.	SHEET NO.
U-5914	Sig. 1.1

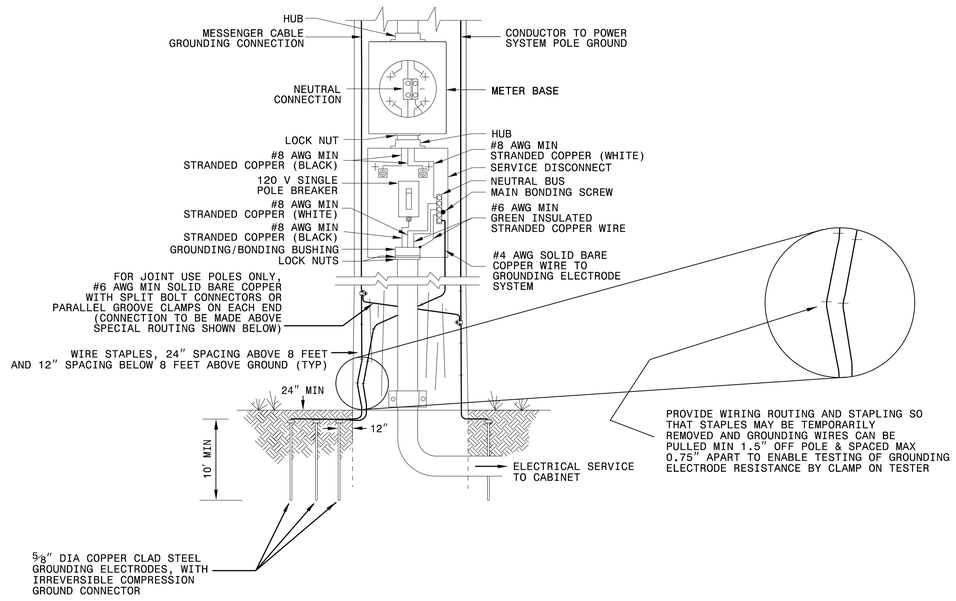

STATE OF NORTH CAROLINA
DEPT. OF TRANSPORTATION
DIVISION OF HIGHWAYS
RALEIGH, N.C.

1-18

ENGLISH STANDARD DRAWING FOR

ELECTRICAL SERVICE GROUNDING

GROUNDING AND BONDING

SHEET 1 OF 1

1700D01

TWO-BOLT METHOD (PREFERRED)

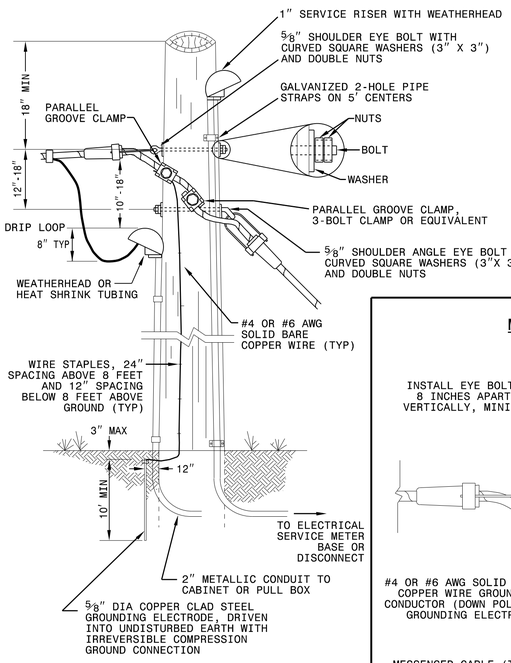

ONE-BOLT METHOD

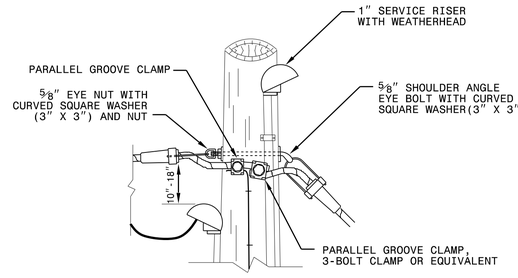

MULTIPLE SPANS

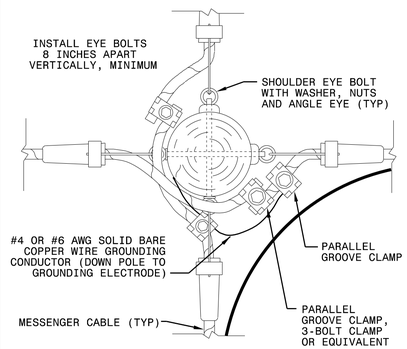

COMMUNICATIONS CABLE AT INTERMEDIATE POLE

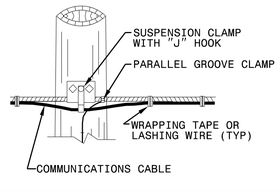

NOTE

FOR CONNECTING MESSENGER TO MESSENGER, USE PARALLEL GROOVE CLAMP, 3-BOLT CLAMP OR EQUIVALENT. FOR CONNECTING COPPER WIRE TO MESSENGER, USE PARALLEL GROOVE CLAMP.

STATE OF NORTH CAROLINA
DEPT. OF TRANSPORTATION
DIVISION OF HIGHWAYS
RALEIGH, N.C.

1-18

ENGLISH STANDARD DRAWING FOR

WOOD POLES

METHODS OF ATTACHMENT AND GROUNDING

SHEET 1 OF 1

1720D01

DOCUMENT NOT CONSIDERED FINAL UNLESS ALL SIGNATURES COMPLETED

See Plate for Title

Prepared in the Offices of:

Transportation Mobility and Safety Division
DEPARTMENT OF TRANSPORTATION • STATE OF NORTH CAROLINA •
ITS & Signals Unit

750 N. Greenfield Parkway
Garner, NC 27529

SEAL
NORTH CAROLINA
PROFESSIONAL
SEAL
032108
ENGINEER
MOHD A. ASLAMI

DocuSigned by:
Mohd Aslami
5D9D0BA5D8B0495...

10/11/2017
DATE

11-OCT-2017 08:56
U:\Projects\Std Drawings\Plate Sheets\2018_Plate Sheet .dgn
rwDough

DocuSign Envelope ID: EC232C59-1224-4D0C-B3D3-A4E7F3BA38C6

PROJECT NO.	SHEET NO.
U-5914	Sig. 1.2

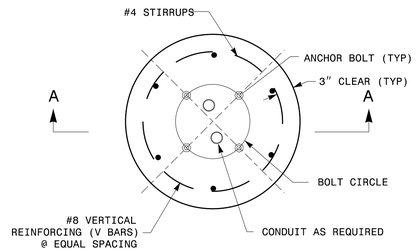

PEDESTAL FOUNDATION - PLAN VIEW

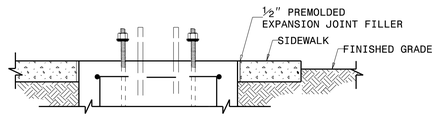

PEDESTAL FOUNDATION DETAILS FOR SIDEWALK

NOTES:

1. CAST FOUNDATION AGAINST UNDISTURBED SOIL WHEREVER CONDITIONS PERMIT. IN UNSTABLE SOIL, CAST-IN-PLACE TUBE FORMS ARE ALLOWED WITH APPROVAL.
2. COMPLY WITH APPLICABLE PROVISIONS OF SECTION 825 FOR CONCRETE CONSTRUCTION.
3. USE CLASS "A" CONCRETE THAT MEETS THE REQUIREMENTS OF SECTION 1000 WITH A COMPRESSION STRENGTH AT 28 DAYS OF F'c= 3000 PSI (MIN.).
4. USE ASTM GRADE 60 DEFORMED BARS FOR ALL REINFORCING STEEL.
5. GRADE IS ASSUMED TO BE (8H:1V) OR FLATTER. FOUNDATION SIZE AND DEPTHS ARE BASED ON THE FOLLOWING SOIL DESIGN PARAMETERS:
   A. SANDY TYPE SOIL
   B. NO GROUND WATER WITHIN 5'-0" OF SURFACE ELEVATION
   C. WIND SPEED NOT TO EXCEED 140 MPH

   IF ACTUAL CONDITIONS VARY SUBSTANTIALLY FROM THOSE ASSUMED, THE FOUNDATION DEPTH MAY BE ADJUSTED. IN THIS CASE, CONTACT THE ENGINEER.
6. MAINTAIN AT LEAST 3" COVER ON ALL REINFORCEMENT.
7. ORIENT CONDUIT AS REQUIRED BY THE DESIGN OR AS DICTATED BY FIELD CONDITIONS.
8. USE ADHESIVE ANCHOR FOR THREADED COUPLING INSERT. FOR TYPE I MINIMUM DEPTH NECESSARY IS 0'-4½" AND FOR TYPE II MINIMUM DEPTH NECESSARY IS 0'-6⅝". FOLLOW MANUFACTURER'S INSTALLATION INSTRUCTIONS.

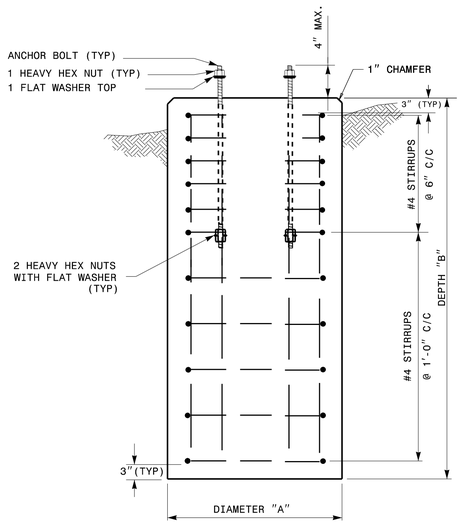

TYPES I, II & III

SECTION A-A

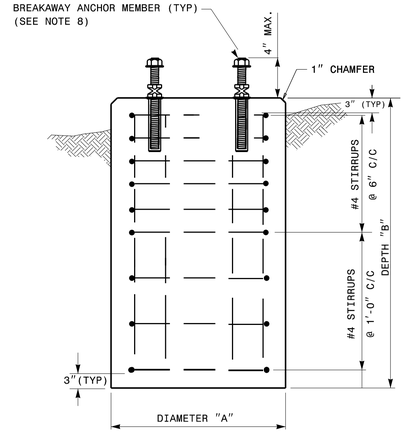

TYPES I & II ONLY

SECTION A-A

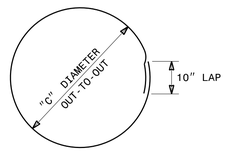

CLOSED HOOPS

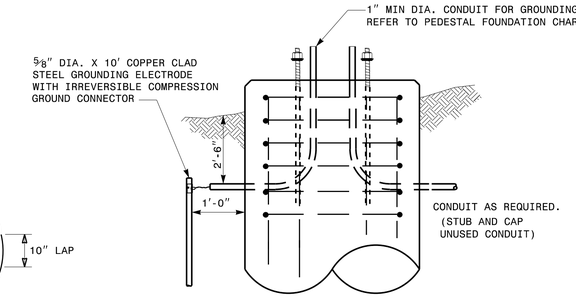

GROUNDING & CONDUIT DETAIL

PEDESTAL FOUNDATION TYPE AND SIZE

TYPE	PEDESTAL DESCRIPTION	SIZE			ANCHOR BOLT		INSTALL GROUNDING SYSTEM (YES/NO)
		DIAMETER "A" FT	DEPTH "B" FT	CONCRETE VOLUME CY	DIAMETER (MIN.) IN	LENGTH FT-IN	
I	PEDESTRIAN PUSHBUTTON	2'-0"	3'-6"	.41	½	1'-6"	NO
II	NORMAL-DUTY	2'-0"	5'-0"	.58	¾	2'-0"	YES
III	HEAVY-DUTY	2'-6"	7'-0"	1.27	1	4'-0"	YES

REINFORCING STEEL SCHEDULE

TYPE	V-BAR				STIRRUP								TOTAL STEEL WEIGHT LBS
	SIZE #	QTY	LENGTH	WEIGHT LBS	SIZE #	QUANTITY VERTICAL SPACING ON 6" CENTERS	QUANTITY VERTICAL SPACING ON 12" CENTERS	QUANTITY TOTAL	LENGTH	DIAMETER "C" FT	OVERLAP MIN.	WEIGHT LBS	
I	8	6	3'-0"	56	4	0	4	4	5'-7"	1'-6"	0'-10"	15	71
II	8	6	4'-6"	86	4	5	3	8	5'-7"	1'-6"	0'-10"	30	116
III	8	6	6'-6"	122	4	7	4	11	7'-2"	2'-0"	0'-10"	53	175

STATE OF NORTH CAROLINA
DEPT. OF TRANSPORTATION
DIVISION OF HIGHWAYS
RALEIGH, N.C.

1-18

ENGLISH STANDARD DRAWING FOR

PEDESTALS

FOUNDATIONS

SHEET 1 OF 1

1743D01

See Plate for Title

Prepared in the Offices of:

Transportation Mobility and Safety Division
ITS & Signals Unit
STATE OF NORTH CAROLINA DEPARTMENT OF TRANSPORTATION

750 N. Greenfield Parkway
Garner, NC 27529

SEAL
NORTH CAROLINA
PROFESSIONAL
SEAL
028094
ENGINEER
DEBESH C. SARKAR

DocuSigned by:
Debesh C. Sarkar
44E8E32E147E4C4...

10/11/2017
DATE

DOCUMENT NOT CONSIDERED
FINAL UNLESS ALL
SIGNATURES COMPLETED

11-OCT-2017 03:03
U:\2018 Std Drawings\Plate Sheets\2018_Plate Sheet .dgn
rwhough

DocuSign Envelope ID: EC232C59-1224-4D0C-B3D3-A4E7F3BA38C6

PROJECT REFERENCE NO.	SHEET NO.
U-5914	Sig. 2.0

PHASING DIAGRAM

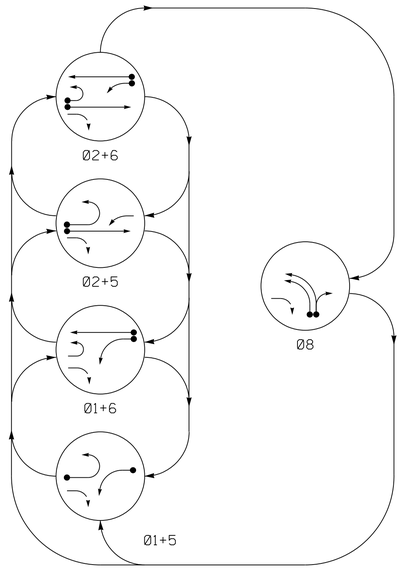

PHASING DIAGRAM DETECTION LEGEND

- DETECTED MOVEMENT
- UNDETECTED MOVEMENT (OVERLAP)
- UNSIGNALIZED MOVEMENT
- PEDESTRIAN MOVEMENT

TABLE OF OPERATION

SIGNAL FACE	PHASE Ø1+5	Ø1+6	Ø2+5	Ø2+6	Ø8	FLASH
11	←	←	← (F Y)	← (F Y)	← R	← Y
21, 22	R	R	G	G	R	Y
51	↶	↶ (F Y)	↶	↶ (F Y)	↶ R	↶ Y
61, 62	R	G	R	G	R	Y
81, 82	R	R	R	R	G	R

SIGNAL FACE I.D.

All Heads L.E.D.

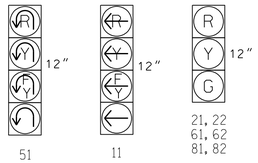

OASIS 2070 LOOP & DETECTOR INSTALLATION CHART

INDUCTIVE LOOPS					DETECTOR PROGRAMMING							
ZONE/LOOP	SIZE (FT)	DISTANCE FROM STOPBAR (FT)	TURNS	NEW LOOP	PHASE	CALLING	EXTENSION	FULL TIME DELAY	STRETCH TIME	DELAY TIME	SYSTEM LOOP	NEW CARD
1A *	6X40	0	*	*	1	Y	Y	-	-	15	-	*
					6	Y	Y	-	-	-	-	*
2A *	6X6	200	*	*	2	Y	Y	-	-	-	-	*
5A *	6X40	0	*	*	5	Y	Y	-	-	15	-	*
					2	Y	Y	-	-	-	-	*
6A *	6X6	200	*	*	6	Y	Y	-	-	-	-	*
8A *	6X40	0	*	*	8	Y	Y	-	-	3	-	*
8B *	6X40	0	*	*	8	Y	Y	-	-	10	-	*
S15	6X6	+240	EXISTING	-	-	-	-	-	-	-	Y	-
S16	6X6	+240	EXISTING	-	-	-	-	-	-	-	Y	-

* Video Detection Zone

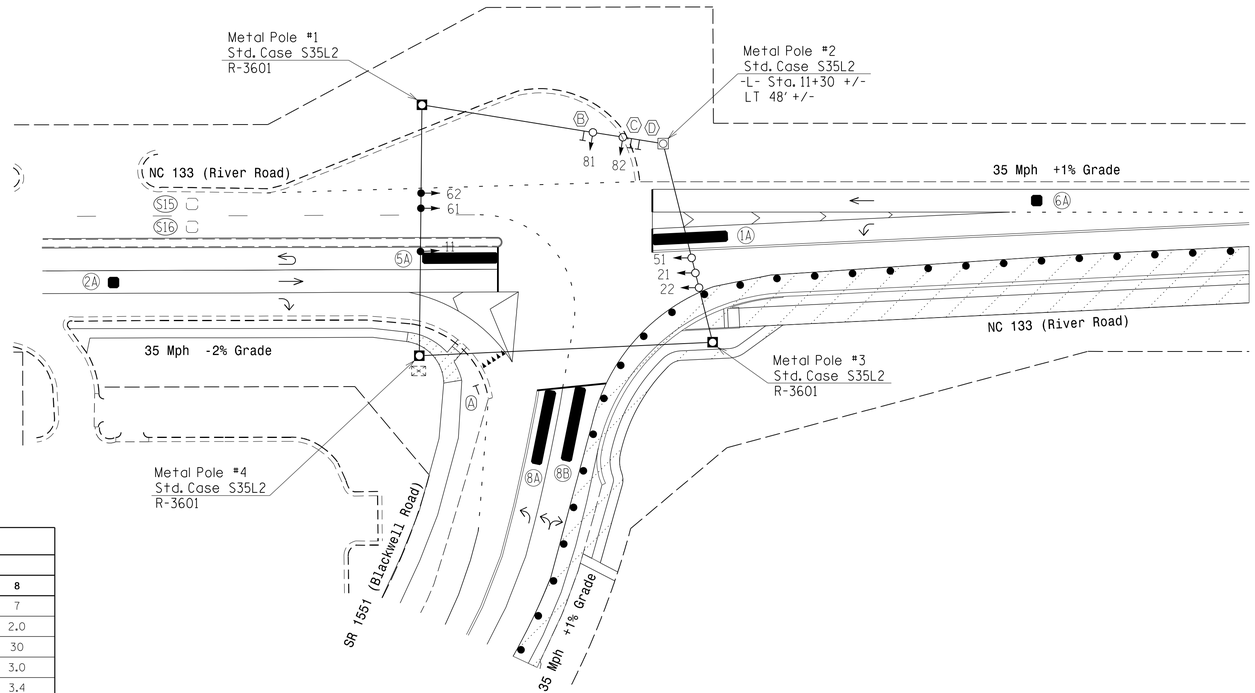

OASIS 2070 TIMING CHART

FEATURE	PHASE 1	2	5	6	8
Min Green 1 *	7	10	7	10	7
Extension 1 *	2.0	6.0	2.0	6.0	2.0
Max Green 1 *	20	60	20	60	30
Yellow Clearance	3.0	4.0	3.0	4.0	3.0
Red Clearance	2.3	2.8	3.8	2.8	3.4
Red Revert	2.0	2.0	2.0	2.0	2.0
Walk 1 *	-	-	-	-	-
Don't Walk 1	-	-	-	-	-
Seconds Per Actuation *	-	2.5	-	2.5	-
Max Variable Initial *	-	24	-	24	-
Time Before Reduction *	-	15	-	15	-
Time To Reduce *	-	30	-	30	-
Minimum Gap	-	3.0	-	3.0	-
Recall Mode	-	MIN RECALL	-	MIN RECALL	-
Vehicle Call Memory	-	YELLOW	-	YELLOW	-
Dual Entry	-	-	-	-	-
Simultaneous Gap	ON	ON	ON	ON	ON

* These values may be field adjusted. Do not adjust Min Green and Extension times for phases 2 and 6 lower than what is shown. Min Green for all other phases should not be lower than 4 seconds.

5 Phase
Fully Actuated
NC 133/SR 1472 (Village Road) CLS
"D03-04_Leland"

NOTES

1. Refer to "Roadway Standard Drawings NCDOT" dated January 2018 and "Standard Specifications for Roads and Structures" dated January 2018.
2. Do not program signal for late night flashing operation unless otherwise directed by the Engineer.
3. Phase 1 and/or phase 5 may be lagged.
4. Reposition existing signal heads numbered 11, 61, and 62.
5. Set all detector units to presence mode.
6. This intersection uses video detection. Install detectors according to the manufacturer's instructions to achieve the desired detection.
7. Maximum times shown in timing chart are for free-run operation only. Coordinated signal system timing values supersede these values.
8. Controller Asset: #0504.

LEGEND

PROPOSED		EXISTING
○→	Traffic Signal Head	●→
◐→	Modified Signal Head	N/A
⊣	Sign	⊣
□↓	Pedestrian Signal Head With Push Button & Sign	■↓
○	Signal Pole with Guy	●
○	Signal Pole with Sidewalk Guy	●
▭	Inductive Loop Detector	▭
⊠	Controller & Cabinet	⊠
□	Junction Box	■
----------	2-in Underground Conduit	----------
N/A	Right of Way	----------
→	Directional Arrow	→
◎	Metal Strain Pole	◘
▬	Video Detection Zone	▬
▨	Construction Zone	▨
● ●	Construction Zone Drums	● ●
Ⓐ	"YIELD" Sign (R1-2)	Ⓐ
Ⓑ	Left Arrow "ONLY" Sign (R3-5L)	Ⓑ
Ⓒ	Dual Turn Arrows Sign (R3-18)	Ⓒ
Ⓓ	"NO TURN ON RED" Sign (R10-11)	Ⓓ

Signal Upgrade - Temp Design (TMP Phase III)

DOCUMENT NOT CONSIDERED FINAL UNLESS ALL SIGNATURES COMPLETED

AECOM
NC Firm License No.: F-0342
5438 Wade Park Boulevard
Suite 200 Raleigh, NC 27607
Phone: 919-461-1100

Prepared for the Offices of:
Transportation Mobility and Safety Division
NORTH CAROLINA DEPARTMENT OF TRANSPORTATION
Signal Design Section
750 N.Greenfield Pkwy,Garner,NC 27529

NC 133 (River Road)
at
SR 1551 (Blackwell Road)

Division 3 | Brunswick County | Leland

PLAN DATE: Mar 2023 | REVIEWED BY: H.M. Surti
PREPARED BY: M.D. Tindal | REVIEWED BY:

SCALE 0 40 1"=40'

REVISIONS	INIT.	DATE

SEAL
NORTH CAROLINA PROFESSIONAL SEAL 034481 ENGINEER HEMANG M. SURTI

DocuSigned by: Hemang M. Surti 3/8/2023
SIG. INVENTORY NO. 03-0504T

3/8/2023
jbrewer@aecom-nc-pw.bentley.com
AECOM_USA_North_Carolina#Documents#60512233-U-5914 - NC 133#900-CAD GIS#910_CAD#70_NCDOT_TIP#Traffic#Signals#Design#Signals#0305041_sig_dsn_2022XXX.dgn
Timothy M

DocuSign Envelope ID: EC232C59-1224-4D0C-B3D3-A4E7F3BA38C6

EDI MODEL 2018ECL-NC CONFLICT MONITOR PROGRAMMING DETAIL

(remove jumpers and set switches as shown)

REMOVE DIODE JUMPERS I-5, I-6, I-9, I-11, 2-5, 2-6, 2-9, 2-11, 5-9, 5-11, 6-9, 6-11 AND 9-11.

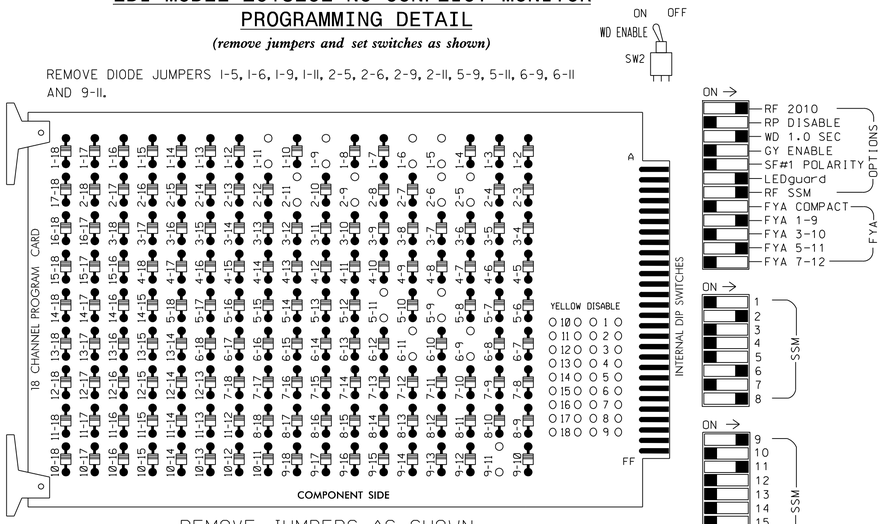

REMOVE JUMPERS AS SHOWN

NOTES:

1. Card is provided with all diode jumpers in place. Removal of any jumper allows its channels to run concurrently.
2. Ensure jumpers SEL2-SEL5 and SEL9 are present on the monitor board.
3. Ensure that Red Enable is active at all times during normal operation.
4. Connect serial cable from conflict monitor to comm. port 1 of 2070 controller. Ensure conflict monitor communicates with 2070.

■ = DENOTES POSITION OF SWITCH

INPUT FILE POSITION LAYOUT

(front view)

		1	2	3	4	5	6	7	8	9	10	11	12	13	14
FILE "I"	U	SLOT EMPTY	SLOT EMPTY	SLOT EMPTY	SLOT EMPTY	SLOT EMPTY	SLOT EMPTY	SLOT EMPTY	SLOT EMPTY	SYS. DET. S15	SLOT EMPTY	SLOT EMPTY	SLOT EMPTY	SLOT EMPTY	FS DC ISOLATOR
	L									SYS. DET. S16					ST DC ISOLATOR
FILE "J"	U	SLOT EMPTY	SLOT EMPTY	SLOT EMPTY	SLOT EMPTY	SLOT EMPTY	SLOT EMPTY	SLOT EMPTY	SLOT EMPTY	SLOT EMPTY	SLOT EMPTY	SLOT EMPTY	SLOT EMPTY	SLOT EMPTY	SLOT EMPTY
	L														

EX.: 1A, 2A, ETC. = LOOP NO.'S

FS = FLASH SENSE
ST = STOP TIME

LOAD RESISTOR INSTALLATION DETAIL

(install resistors as shown below)

ACCEPTABLE VALUES	
VALUE (ohms)	WATTAGE
1.5K - 1.9K	25W (min)
2.0K - 3.0K	10W (min)

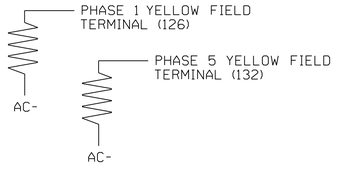

NOTES

1. To prevent "flash-conflict" problems, insert red flash program blocks for all unused vehicle load switches in the output file. The installer shall verify that signal heads flash in accordance with the Signal Plans.
2. Enable Simultaneous Gap-Out for all Phases.
3. Program phases 2 and 6 for Variable Initial and Gap Reduction.
4. Program phases 2 and 6 for Startup In Green.
5. Program phases 2 and 6 for Yellow Flash, and overlap 1 as Wag Overlap.
6. The cabinet and controller are part of the NC 133/ SR 1472 (Village Road) CLS "D03-04_Leland".

EQUIPMENT INFORMATION

CONTROLLER.....EXISTING 2070
CABINET.....EXISTING 332 W/ AUX
SOFTWARE.....ECONOLITE OASIS
CABINET MOUNT.....BASE
OUTPUT FILE POSITIONS...18 WITH AUX. OUTPUT FILE
LOAD SWITCHES USED.....S1,S2,S7,S8,S11,AUX S1,AUX S4
PHASES USED.....1,2,5,6,8
OVERLAP "A".....1+2
OVERLAP "B".....NOT USED
OVERLAP "C".....5+6
OVERLAP "D".....NOT USED

SPECIAL DETECTOR NOTE

Install a video detection system for vehicle detection. Perform installation according to manufacturer's directions and NCDOT engineer-approved mounting locations to accomplish the detection schemes shown on the Signal Design Plans.

INPUT FILE CONNECTION & PROGRAMMING CHART

LOOP NO.	LOOP TERMINAL	INPUT FILE POS.	PIN NO.	INPUT ASSIGNMENT NO.	DETECTOR NO.	NEMA PHASE	CALL	EXTEND	FULL TIME DELAY	STRETCH TIME	DELAY TIME
✳ S15	TB6-9,10	19U	60	22	11	SYS					
✳ S16	TB6-11,12	19L	62	24	13	SYS					

✳ SYSTEM DETECTOR ONLY. REMOVE THE VEHICLE PHASE ASSIGNED TO THIS DETECTOR IN THE DEFAULT PROGRAMMING.

INPUT FILE POSITION LEGEND: J2L
FILE J
SLOT 2
LOWER

AECOM
NC Firm License No.: F-0342
5438 Wade Park Boulevard
Suite 200 Raleigh, NC 27607
Phone: 919-461-1100

PROJECT REFERENCE NO.	SHEET NO.
U-5914	Sig. 2.1

SIGNAL HEAD HOOK-UP CHART

LOAD SWITCH NO.	S1	S2	S3	S4	S5	S6	S7	S8	S9	S10	S11	S12	AUX S1	AUX S2	AUX S3	AUX S4	AUX S5	AUX S6
CMU CHANNEL NO.	1	2	13	3	4	14	5	6	15	7	8	16	9	10	17	11	12	18
PHASE	1	2	2 PED	3	4	4 PED	5	6	6 PED	7	8	8 PED	OLA	OLB	SPARE	OLC	OLD	SPARE
SIGNAL HEAD NO.	11 ★	21,22	NU	NU	NU	NU	51 ★	61,62	NU	NU	81,82	NU	11 ★	NU	NU	51 ★	NU	NU
RED		128						134			107							
YELLOW	✳	129					✳	135			108							
GREEN		130						136			109							
RED ARROW													A121			A114		
YELLOW ARROW													A122			A115		
FLASHING YELLOW ARROW													A123			A116		
GREEN ARROW	127						133											

NU = Not Used

✳ Denotes install load resistor. See load resistor installation detail this sheet.

★ See pictorial of head wiring in detail this sheet.

FYA SIGNAL WIRING DETAIL

(wire signal heads as shown)

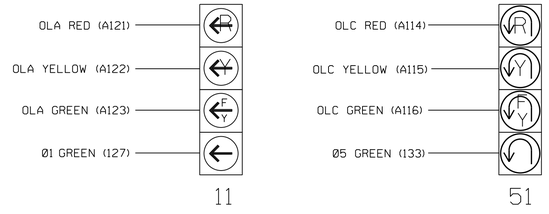

NOTE

The sequence display for signal heads 11 and 51 requires special logic programming. See sheet 2 for programming instructions.

THIS ELECTRICAL DETAIL IS FOR
THE SIGNAL DESIGN: 03-0504T
DESIGNED: Mar 2023
SEALED: 3-8-23
REVISED:

Temporary Design (TMP Phase III)
Electrical Detail - Sheet 1 of 2

DOCUMENT NOT CONSIDERED FINAL UNLESS ALL SIGNATURES COMPLETED

ELECTRICAL AND PROGRAMMING DETAILS FOR:

NC 133 (River Road)
at
SR 1551 (Blackwell Road)

Prepared for the Offices of:
Transportation Mobility and Safety Division
Traffic Engineering Branch
Traffic Signal Management Section
750 N.Greenfield Pkwy.Garner,NC 27529

Division 3	Brunswick County	Leland
PLAN DATE: Mar 2023	REVIEWED BY: H.M. Surti	
PREPARED BY: A. Ravipati	REVIEWED BY:	

REVISIONS	INIT.	DATE

SEAL
NORTH CAROLINA PROFESSIONAL SEAL 034481 ENGINEER HEMANG M. SURTI

DocuSigned by: Hemang M. Surti 3/8/2023

SIG. INVENTORY NO. 03-0504T

3/8/2023
DGN: #4030041.dgn
USER: htindall
C:\Users\htindall.com\ac-dw.bentley.com:AECOM.USA.North.Carolina\Documents\#60512233-U-5914 - NC 133\#00-CAD GIS\#10_CAD\#70_NCDOT_ITP\Traffic\#Signals\#Design\#Signals\#Electricals 2022\#4030041_sm_ele_2022XXXX.dgn

DocuSign Envelope ID: EC232C59-1224-4D0C-B3D3-A4E7F3BA38C6

PROJECT REFERENCE NO.	SHEET NO.
U-5914	Sig. 2.2

LOGICAL I/O PROCESSOR PROGRAMMING DETAIL
TO PRODUCE SPECIAL FYA-PPLT SIGNAL SEQUENCE

(program controller as shown below)

1. FROM MAIN MENU PRESS '2' (PHASE CONTROL), THEN '1' (PHASE CONTROL FUNCTIONS). SCROLL TO THE BOTTOM OF THE MENU AND ENABLE ACT LOGIC COMMANDS 1, 2, 3, 4, 5 AND 6.

2. FROM MAIN MENU PRESS '6' (OUTPUTS), THEN '3' (LOGICAL I/O PROCESSOR).

```
  LOGICAL I/O COMMAND #1  (+/-COMMAND#)
IF  ACTIVE PHASE       #1  IS ON
AND RED CLEAR ON PHASE #1  IS ON

            SCROLL DOWN

THEN:
SET OUTPUT  ASSIGNMENT #50 ON
SET OUTPUT  ASSIGNMENT #51 OFF
```

NOTE: LOGIC FOR PHASE 1 RED CLEAR WHEN TRANSITIONING FROM PHASE 1 TO PHASE 2 (HEAD 11).

PRESS '+'

```
  LOGICAL I/O COMMAND #2  (+/-COMMAND#)
IF  ACTIVE PHASE       #1  IS ON

            SCROLL DOWN

THEN:
SET OUTPUT  ASSIGNMENT #52 OFF
```

NOTE: LOGIC FOR SWITCHING FLASHING YELLOW ARROW OFF DURING PHASE 1 (HEAD 11).

PRESS '+'

```
  LOGICAL I/O COMMAND #3  (+/-COMMAND#)
IF  YELLOW ON PHASE    #1  IS ON

            SCROLL DOWN

THEN:
SET OUTPUT  ASSIGNMENT #51 ON
```

NOTE: LOGIC FOR YELLOW ARROW CLEARANCE FROM PHASE 1 (HEAD 11).

PRESS '+'

```
  LOGICAL I/O COMMAND #4  (+/-COMMAND#)
IF  ACTIVE PHASE       #5  IS ON
AND RED CLEAR ON PHASE #5  IS ON

            SCROLL DOWN

THEN:
SET OUTPUT  ASSIGNMENT #42 ON
SET OUTPUT  ASSIGNMENT #43 OFF
```

NOTE: LOGIC FOR PHASE 5 RED CLEAR WHEN TRANSITIONING FROM PHASE 5 TO PHASE 6 (HEAD 51).

PRESS '+'

```
  LOGICAL I/O COMMAND #5  (+/-COMMAND#)
IF  ACTIVE PHASE       #5  IS ON

            SCROLL DOWN

THEN:
SET OUTPUT  ASSIGNMENT #44 OFF
```

NOTE: LOGIC FOR SWITCHING FLASHING YELLOW ARROW OFF DURING PHASE 5 (HEAD 51).

PRESS '+'

```
  LOGICAL I/O COMMAND #6  (+/-COMMAND#)
IF  YELLOW ON PHASE    #5  IS ON

            SCROLL DOWN

THEN:
SET OUTPUT  ASSIGNMENT #43 ON
```

NOTE: LOGIC FOR YELLOW ARROW CLEARANCE FROM PHASE 5 (HEAD 51).

LOGIC I/O PROCESSOR PROGRAMMING COMPLETE

OUTPUT REFERENCE SCHEDULE

OUTPUT 42 = Overlap C Red
OUTPUT 43 = Overlap C Yellow
OUTPUT 44 = Overlap C Green
OUTPUT 50 = Overlap A Red
OUTPUT 51 = Overlap A Yellow
OUTPUT 52 = Overlap A Green

OVERLAP PROGRAMMING DETAIL

(program controller as shown below)

FROM MAIN MENU PRESS '8' (OVERLAPS), THEN '1' (VEHICLE OVERLAP SETTINGS).

```
 PAGE 1: VEHICLE OVERLAP 'A' SETTINGS
 PHASE:          ¦12345678910111213141516
VEH OVL PARENTS:¦XX
VEH OVL NOT VEH:¦
VEH OVL NOT PED:¦
VEH OVL GRN EXT:¦
STARTUP COLOR: _ RED  _ YELLOW  _ GREEN
FLASH COLORS:  _ RED  _ YELLOW  X GREEN
SELECT VEHICLE OVERLAP OPTIONS:   (Y/N)
FLASH YELLOW IN CONTROLLER FLASH?...Y
GREEN EXTENSION (0-255 SEC).........0
YELLOW CLEAR (0=PARENT,3-25.5 SEC)..0.0
RED CLEAR (0=PARENT,0.1-25.5 SEC)...0.0
OUTPUT AS PHASE # (0=NONE, 1-16)....0
```

← NOTICE GREEN FLASH

PRESS '+' TWICE

```
 PAGE 1: VEHICLE OVERLAP 'C' SETTINGS
 PHASE:          ¦12345678910111213141516
VEH OVL PARENTS:¦    XX
VEH OVL NOT VEH:¦
VEH OVL NOT PED:¦
VEH OVL GRN EXT:¦
STARTUP COLOR: _ RED  _ YELLOW  _ GREEN
FLASH COLORS:  _ RED  _ YELLOW  X GREEN
SELECT VEHICLE OVERLAP OPTIONS:   (Y/N)
FLASH YELLOW IN CONTROLLER FLASH?...Y
GREEN EXTENSION (0-255 SEC).........0
YELLOW CLEAR (0=PARENT,3-25.5 SEC)..0.0
RED CLEAR (0=PARENT,0.1-25.5 SEC)...0.0
OUTPUT AS PHASE # (0=NONE, 1-16)....0
```

← NOTICE GREEN FLASH

OVERLAP PROGRAMMING COMPLETE

THIS ELECTRICAL DETAIL IS FOR
THE SIGNAL DESIGN: 03-0504T
DESIGNED: Mar 2023
SEALED: 3-8-23
REVISED:

Temporary Design (TMP Phase III)
Electrical Detail - Sheet 2 of 2

DOCUMENT NOT CONSIDERED FINAL UNLESS ALL SIGNATURES COMPLETED

AECOM
NC Firm License No.: F-0342
5438 Wade Park Boulevard
Suite 200 Raleigh, NC 27607
Phone: 919-461-1100

ELECTRICAL AND PROGRAMMING DETAILS FOR:

NC 133 (River Road)
at
SR 1551 (Blackwell Road)

Division 3 | Brunswick County | Leland

PLAN DATE:	Mar 2023	REVIEWED BY:	H.M. Surti
PREPARED BY:	A. Ravipati	REVIEWED BY:	

REVISIONS	INIT.	DATE

Prepared for the Offices of:
NC Department of Transportation Mobility and Safety Division Traffic Engineering Branch Signals Management Section
750 N.Greenfield Pkwy,Garner,NC 27529

SEAL
NORTH CAROLINA PROFESSIONAL SEAL 034481 ENGINEER HEMANG M. SURTI

DocuSigned by: Hemang M. Surti 3/8/2023
SIG. INVENTORY NO. 03-0504T

3/8/2023
DGN: ...\Signals\Design\Signals\Electricals 2022\0305041_sm_ele_2022XXX.dgn
Tinda M

DocuSign Envelope ID: EC232C59-1224-4D0C-B3D3-A4E7F3BA38C6

PROJECT REFERENCE NO.	SHEET NO.
U-5914	Sig. 3.0

DEFAULT PHASING DIAGRAM

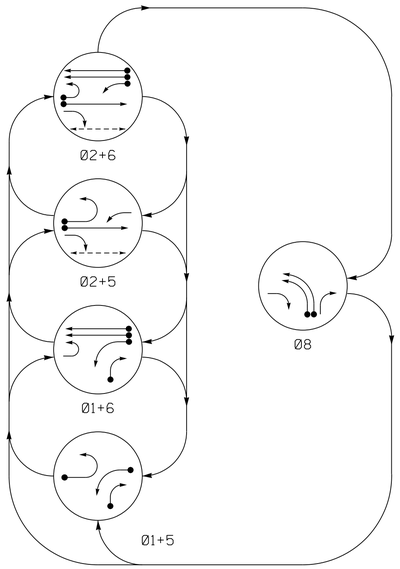

PHASING DIAGRAM DETECTION LEGEND

- DETECTED MOVEMENT
- UNDETECTED MOVEMENT (OVERLAP)
- UNSIGNALIZED MOVEMENT
- PEDESTRIAN MOVEMENT

DEFAULT PHASING TABLE OF OPERATION

SIGNAL FACE	PHASE 01+5	01+6	02+5	02+6	08	FLASH
11	←	←	←FY	←FY	←R	←Y
21, 22	R	R	G	G	R	Y
23	R	R	←FY	←FY	←Y	←Y
51	↶	↶FY	↶	↶Y	↶R	↶Y
61, 62	R	G	R	G	R	Y
81, 82	←R	←R	←R	←R	←	←R
83	←FY	←FY	R	R	←FY	R
P21, P22	DW	DW	W	W	DW	DRK

ALTERNATE PHASING TABLE OF OPERATION

SIGNAL FACE	PHASE 01+5	01+6	02+5	02+6	08	FLASH
11	←	←	←R	←R	←R	←Y
21, 22	R	R	G	G	R	Y
23	R	R	←FY	←FY	←Y	←Y
51	↶	↶R	↶	↶R	↶R	↶Y
61, 62	R	G	R	G	R	Y
81, 82	←R	←R	←R	←R	←	←R
83	←FY	←FY	R	R	←FY	R
P21, P22	DW	DW	W	W	DW	DRK

ALTERNATE PHASING DIAGRAM

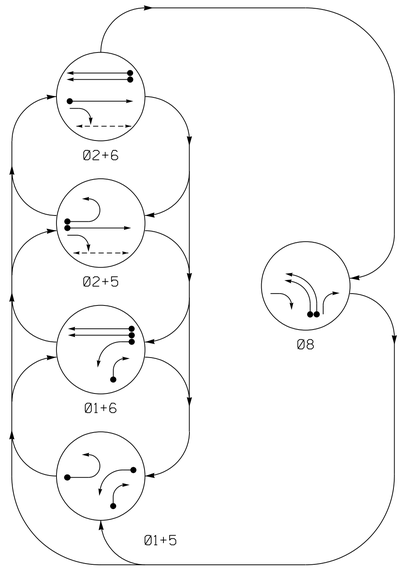

PHASING DIAGRAM DETECTION LEGEND

- DETECTED MOVEMENT
- UNDETECTED MOVEMENT (OVERLAP)
- UNSIGNALIZED MOVEMENT
- PEDESTRIAN MOVEMENT

OASIS 2070 LOOP & DETECTOR INSTALLATION CHART

INDUCTIVE LOOPS					DETECTOR PROGRAMMING						
LOOP	SIZE (FT)	DISTANCE FROM STOPBAR (FT)	TURNS	NEW LOOP	PHASE	CALLING	EXTENSION	FULL TIME DELAY	STRETCH TIME	DELAY TIME	SYSTEM LOOP	NEW CARD
1A	6X40	0	2-4-2	Y	1	Y	Y	-	-	15*	-	-
					6**	Y	Y	Y	-	3	-	-
1B	6X40	0	2-4-2	Y	1	Y	Y	-	-	15	-	-
1C	6X6	0	4	Y	1	Y	Y	-	-	15	-	Y
2A	6X6	200	4	Y	2	Y	Y	-	-	-	-	-
5A	6X40	0	2-4-2	Y	5	Y	Y	-	-	15*	-	-
					2**	Y	Y	Y	-	3	-	-
6A	6X6	200	4	Y	6	Y	Y	-	-	-	-	-
6B	6X6	200	4	Y	6	Y	Y	-	-	-	-	Y
8A	6X40	0	2-4-2	Y	8	Y	Y	-	-	3	-	-
8B	6X40	0	2-4-2	Y	8	Y	Y	-	-	-	-	-
S15	6X6	+240	EXISTING	-	-	-	-	-	-	-	Y	-
S16	6X6	+240	EXISTING	-	-	-	-	-	-	-	Y	-

* Disable delay during Alternate Phasing Operation.

** Disable phase 2 or 6 call for Loops 1A and 5A during Alternate Phasing Operation.

SIGNAL FACE I.D.

All Heads L.E.D.

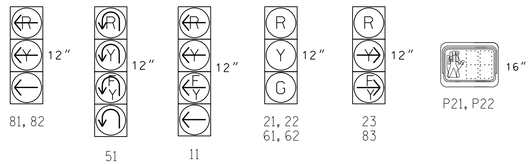

5 Phase
Fully Actuated
NC 133/SR 1472 (Village Road) CLS
"D03-04_Leland"

NOTES

1. Refer to "Roadway Standard Drawings NCDOT" dated January 2018 and "Standard Specifications for Roads and Structures" dated January 2018.
2. Do not program signal for late night flashing operation unless otherwise directed by the Engineer.
3. Phase 1 and/or phase 5 may be lagged.
4. Reposition existing signal heads numbered 11, 51, 61, and 62.
5. Set all detector units to presence mode.
6. Omit "WALK" and flashing "DON'T WALK" with no pedestrian calls.
7. Program pedestrian heads to countdown the flashing "Don't Walk" time only.
8. Maximum times shown in timing chart are for free-run operation only. Coordinated signal system timing values supersede these values.
9. Controller Asset: #0504.

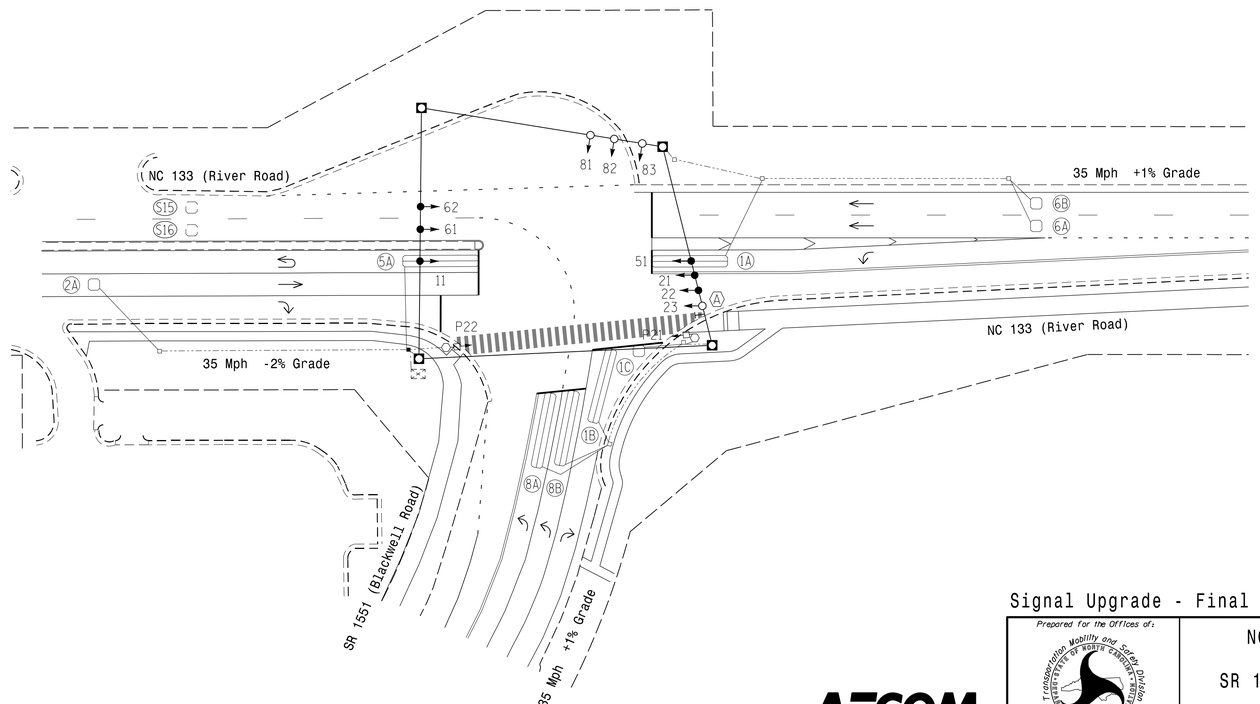

LEGEND

PROPOSED		EXISTING
○→	Traffic Signal Head	●→
◐→	Modified Signal Head	N/A
⊣	Sign	⊣
□↓	Pedestrian Signal Head With Push Button & Sign	■↓
○	Signal Pole with Guy	●
○	Signal Pole with Sidewalk Guy	●
▭	Inductive Loop Detector	▭
⊠	Controller & Cabinet	⊠
□	Junction Box	■
·····	2-in Underground Conduit	·—·—·
N/A	Right of Way	— — —
→	Directional Arrow	→
⬡	Type II Signal Pedestal	⬢
◎	Metal Strain Pole	◘
Ⓐ	"RIGHT TURNING VEHICLES YIELD TO PEDESTRIANS" Sign (R10-15R)	Ⓐ

OASIS 2070 TIMING CHART

FEATURE	PHASE 1	2	5	6	8
Min Green 1 *	7	10	7	10	7
Extension 1 *	2.0	6.0	2.0	6.0	2.0
Max Green 1 *	20	60	20	60	30
Yellow Clearance	3.0	4.0	3.0	4.0	3.0
Red Clearance	2.4	2.8	3.8	2.8	3.4
Red Revert	2.0	2.0	2.0	2.0	2.0
Walk 1 *	-	7	-	-	-
Don't Walk 1	-	31	-	-	-
Seconds Per Actuation *	-	2.5	-	1.5	-
Max Variable Initial *	-	24	-	24	-
Time Before Reduction *	-	15	-	15	-
Time To Reduce *	-	30	-	30	-
Minimum Gap	-	3.0	-	3.0	-
Recall Mode	-	MIN RECALL	-	MIN RECALL	-
Vehicle Call Memory	-	YELLOW	-	YELLOW	-
Dual Entry	-	-	-	-	-
Simultaneous Gap	ON	ON	ON	ON	ON

* These values may be field adjusted. Do not adjust Min Green and Extension times for phases 2 and 6 lower than what is shown. Min Green for all other phases should not be lower than 4 seconds.

Signal Upgrade - Final Design

DOCUMENT NOT CONSIDERED FINAL UNLESS ALL SIGNATURES COMPLETED

AECOM
NC Firm License No.: F-0342
5438 Wade Park Boulevard
Suite 200 Raleigh, NC 27607
Phone: 919-461-1100

Prepared for the Offices of:
Transportation Mobility and Safety Division
NORTH CAROLINA DEPARTMENT OF TRANSPORTATION
Signal Design Section
750 N.Greenfield Pkwy,Garner,NC 27529

NC 133 (River Road)
at
SR 1551 (Blackwell Road)

Division 3 | Brunswick County | Leland

PLAN DATE: Mar 2023 | REVIEWED BY: H.M. Surti
PREPARED BY: M.D. Tindal | REVIEWED BY:

SCALE 0 40 1"=40'

REVISIONS	INIT.	DATE

SEAL
NORTH CAROLINA PROFESSIONAL SEAL 034481 ENGINEER HEMANG M. SURTI

DocuSigned by: Hemang M. Surti 3/8/2023

SIG. INVENTORY NO. 03-0504

3/8/2023
Date Saved
Plotted
M.D. Tindal
C:\Users\mdtindal\AppData\Local\Temp\acom-ng-pw.bentley.com\AECOM_USA.North_Carolina%Documents%60512233-U-5914 - NC 133#900-CAD GIS#910_CAD#70_NCDOT_TIP#TrafficSignals#Design#Signals#030504_sig_dsn_2022XXXX.dgn

DocuSign Envelope ID: EC232C59-1224-4D0C-B3D3-A4E7F3BA38C6

EDI MODEL 2018ECL-NC CONFLICT MONITOR PROGRAMMING DETAIL

(remove jumpers and set switches as shown)

REMOVE DIODE JUMPERS I-5, I-6, I-9, I-10, I-11, 2-5, 2-6, 2-9, 2-11, 2-12, 2-13, 5-9, 5-10, 5-11, 5-12, 5-13, 6-9, 6-10, 6-11, 6-12, 6-13, 8-10, 8-12, 9-10, 9-11, 9-12, 9-13, 10-11, 10-12, 11-12, 11-13 AND 12-13.

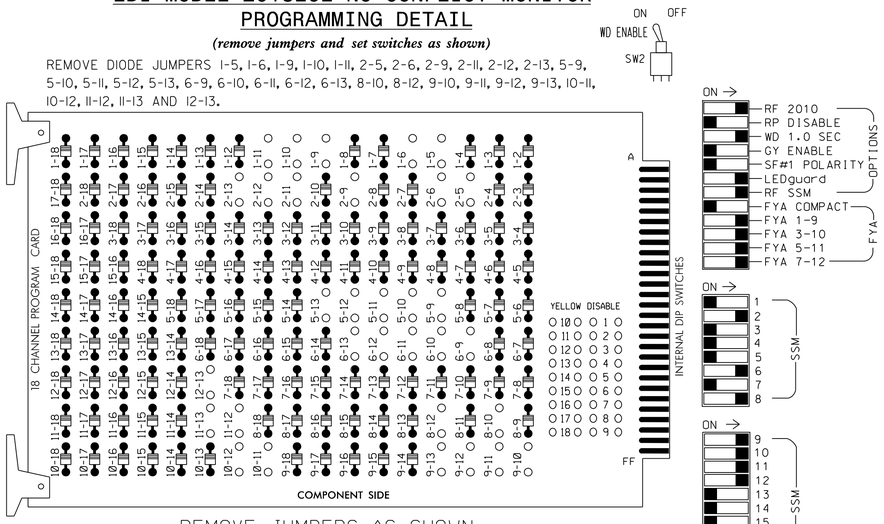

REMOVE JUMPERS AS SHOWN

NOTES:

1. Card is provided with all diode jumpers in place. Removal of any jumper allows its channels to run concurrently.
2. Ensure jumpers SEL2-SEL5 and SEL9 are present on the monitor board.
3. Ensure that Red Enable is active at all times during normal operation.
4. Connect serial cable from conflict monitor to comm. port 1 of 2070 controller. Ensure conflict monitor communicates with 2070.

■ = DENOTES POSITION OF SWITCH

NOTES

1. To prevent "flash-conflict" problems, insert red flash program blocks for all unused vehicle load switches in the output file. The installer shall verify that signal heads flash in accordance with the Signal Plans.
2. Enable Simultaneous Gap-Out for all Phases.
3. Program phases 2 and 6 for Variable Initial and Gap Reduction.
4. Program phases 2 and 6 for Startup In Green.
5. Program phase 2 for Startup Ped Call.
6. Program phases 2 and 6 for Yellow Flash, and overlaps 1 and 2 as Wag Overlaps.
7. The cabinet and controller are part of the NC 133/ SR 1472 (Village Road) CLS "D03-04_Leland".

EQUIPMENT INFORMATION

CONTROLLER.....EXISTING 2070
CABINET.....EXISTING 332 W/ AUX
SOFTWARE.....ECONOLITE OASIS
CABINET MOUNT.....BASE
OUTPUT FILE POSITIONS...18 WITH AUX. OUTPUT FILE
LOAD SWITCHES USED.....S1,S2,S3,S7,S8,S11,AUX S1, AUX S2,AUX S4,AUX S5
PHASES USED.....1,2,5,6,8
OVERLAP "A".....1+2
OVERLAP "B".....1+8
OVERLAP "C".....5+6
OVERLAP "D".....2+8

PROJECT REFERENCE NO.	SHEET NO.
U-5914	Sig. 3.1

SIGNAL HEAD HOOK-UP CHART

LOAD SWITCH NO.	S1	S2	S3	S4	S5	S6	S7	S8	S9	S10	S11	S12	AUX S1	AUX S2	AUX S3	AUX S4	AUX S5	AUX S6
CMU CHANNEL NO.	1	2	13	3	4	14	5	6	15	7	8	16	9	10	17	11	12	18
PHASE	1	2	2 PED	3	4	4 PED	5	6	6 PED	7	8	8 PED	OLA	OLB	SPARE	OLC	OLD	SPARE
SIGNAL HEAD NO.	11★	21,22	P21, P22	NU	NU	NU	51★	61,62	NU	NU	81,82	NU	11★	83★	NU	51★	23★	NU
RED		128						134						A124			A101	
YELLOW	✳	129					✳	135										
GREEN		130						136										
RED ARROW											107		A121			A114		
YELLOW ARROW											108		A122	A125		A115	A102	
FLASHING YELLOW ARROW													A123	A126		A116	A103	
GREEN ARROW	127						133				109							
✋			113															
🚶			115															

NU = Not Used

✳ Denotes install load resistor. See load resistor installation detail this sheet.

★ See pictorial of head wiring in detail this sheet.

FYA SIGNAL WIRING DETAIL

(wire signal heads as shown)

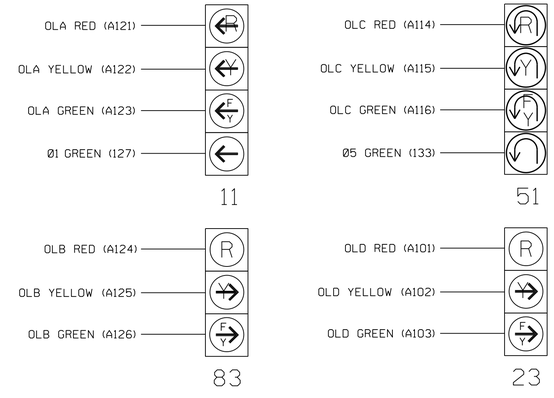

NOTE

The sequence display for signal heads 11 and 51 requires special logic programming. See sheet 2 for programming instructions.

INPUT FILE POSITION LAYOUT

(front view)

		1	2	3	4	5	6	7	8	9	10	11	12	13	14
FILE "I"	U	Ø1 1A	Ø1 1B	Ø2 2A	WIRED INPUT ⊗	SLOT EMPTY	SLOT EMPTY	SLOT EMPTY	SLOT EMPTY	SYS. DET. S15	SLOT EMPTY	SLOT EMPTY	Ø2 PED DC ISOLATOR	SLOT EMPTY	FS DC ISOLATOR
	L	NOT USED	Ø1 1C	NOT USED						SYS. DET. S16			NOT USED		ST DC ISOLATOR
FILE "J"	U	Ø5 5A	SLOT EMPTY	Ø6 6A	WIRED INPUT ⊗	SLOT EMPTY	Ø8 8A	SLOT EMPTY	SLOT EMPTY	SLOT EMPTY	SLOT EMPTY	SLOT EMPTY	SLOT EMPTY	SLOT EMPTY	SLOT EMPTY
	L	NOT USED		Ø6 6B			Ø8 8B								

EX.: 1A, 2A, ETC. = LOOP NO.'S

FS = FLASH SENSE
ST = STOP TIME

⊗ Wired Input - Do not populate slot with detector card

INPUT FILE CONNECTION & PROGRAMMING CHART

LOOP NO.	LOOP TERMINAL	INPUT FILE POS.	PIN NO.	INPUT ASSIGNMENT NO.	DETECTOR NO.	NEMA PHASE	CALL	EXTEND	FULL TIME DELAY	STRETCH TIME	DELAY TIME
1A[1]	TB2-1,2	I1U	56	18	1	1	Y	Y			15
	-	J4U	48	10★	26	6	Y	Y	Y		3
	-	I1U	56	18★	51	1	Y	Y			
1B	TB2-5,6	I2U	39	1	2	1	Y	Y			15
1C	TB2-7,8	I2L	43	5	12	1	Y	Y			15
2A	TB2-9,10	I3U	63	25	32	2	Y	Y			
5A[2]	TB3-1,2	J1U	55	17	5	5	Y	Y			15
	-	I4U	47	9★	22	2	Y	Y	Y		3
	-	J1U	55	17★	55	5	Y	Y			
6A	TB3-9,10	J3U	64	26	36	6	Y	Y			
6B	TB3-11,12	J3L	77	39	46	6	Y	Y			
8A	TB5-9,10	J6U	42	4	8	8	Y	Y			3
8B	TB5-11,12	J6L	46	8	18	8	Y	Y			
✳ S15	TB6-9,10	I9U	60	22	11	SYS					
✳ S16	TB6-11,12	I9L	62	24	13	SYS					
PED PUSH BUTTONS											
P21,P22	TB8-4,6	I12U	67	29	PED 2	2 PED					

NOTE:
INSTALL DC ISOLATORS IN INPUT FILE SLOTS I12 AND I13.

[1] Add jumper from I1-W to J4-W, on rear of input file.

[2] Add jumper from J1-W to I4-W, on rear of input file.

★ See Input Page Assignment programming details on sheets 4 and 5.

✳ System detector only. Remove the vehicle phase assigned to this detector in the default programming.

INPUT FILE POSITION LEGEND: J2L
FILE J
SLOT 2
LOWER

LOAD RESISTOR INSTALLATION DETAIL

(install resistors as shown below)

ACCEPTABLE VALUES	
VALUE (ohms)	WATTAGE
1.5K - 1.9K	25W (min)
2.0K - 3.0K	10W (min)

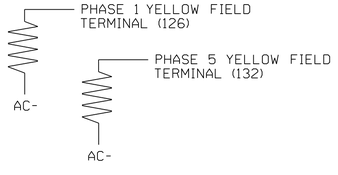

THIS ELECTRICAL DETAIL IS FOR THE SIGNAL DESIGN: 03-0504
DESIGNED: Mar 2023
SEALED: 3-8-23
REVISED:

AECOM
NC Firm License No.: F-0342
5438 Wade Park Boulevard
Suite 200 Raleigh, NC 27607
Phone: 919-461-1100

Final Design
Electrical Detail - Sheet 1 of 6

DOCUMENT NOT CONSIDERED FINAL UNLESS ALL SIGNATURES COMPLETED

ELECTRICAL AND PROGRAMMING DETAILS FOR:

NC 133 (River Road) at SR 1551 (Blackwell Road)

Division 3 | Brunswick County | Leland

PLAN DATE: Mar 2023 | REVIEWED BY: H.M. Surti
PREPARED BY: A. Ravipati | REVIEWED BY:

REVISIONS	INIT.	DATE

Prepared for the Offices of:
Traffic Engineering Branch
Transportation Mobility and Safety Division
NC DEPARTMENT OF TRANSPORTATION
750 N.Greenfield Pkwy,Garner,NC 27529

SEAL
NORTH CAROLINA PROFESSIONAL SEAL 034481 ENGINEER HEMANG M. SURTI

DocuSigned by: Hemang M. Surti 3/8/2023
SIG. INVENTORY NO. 03-0504

3/8/2023
DP4:\\aecom-nc-pw.bentley.com:AECOM_USA_North_Carolina\Documents\60512233-u-5914 - NC 133\900-CAD Files\910_CAD\70_NCDOT_TIP\Traffic\Signals\Design\Signals\Electrical 2022\030504_sm_sig_2022XWX.dgn
Tindall M

DocuSign Envelope ID: EC232C59-1224-4D0C-B3D3-A4E7F3BA38C6

PROJECT REFERENCE NO.	SHEET NO.
U-5914	Sig. 3.2

LOGICAL I/O PROCESSOR PROGRAMMING DETAIL

TO PRODUCE SPECIAL FYA-PPLT SIGNAL SEQUENCE

(program controller as shown below)

1. FROM MAIN MENU PRESS '2' (PHASE CONTROL), THEN '1' (PHASE CONTROL FUNCTIONS). SCROLL TO THE BOTTOM OF THE MENU AND ENABLE ACT LOGIC COMMANDS 1, 2, 3, 4, 5 AND 6.

2. FROM MAIN MENU PRESS '6' (OUTPUTS), THEN '3' (LOGICAL I/O PROCESSOR).

```
  LOGICAL I/O COMMAND #1  (+/-COMMAND#)
IF  ACTIVE PHASE       #1  IS ON
AND RED CLEAR ON PHASE #1  IS ON

            SCROLL DOWN

THEN:
SET OUTPUT  ASSIGNMENT #50 ON
SET OUTPUT  ASSIGNMENT #51 OFF
```

NOTE: LOGIC FOR PHASE 1 RED CLEAR WHEN TRANSITIONING FROM PHASE 1 TO PHASE 2 (HEAD 11).

PRESS '+'

```
  LOGICAL I/O COMMAND #2  (+/-COMMAND#)
IF  ACTIVE PHASE       #1  IS ON

            SCROLL DOWN

THEN:
SET OUTPUT  ASSIGNMENT #52 OFF
```

NOTE: LOGIC FOR SWITCHING FLASHING YELLOW ARROW OFF DURING PHASE 1 (HEAD 11).

PRESS '+'

```
  LOGICAL I/O COMMAND #3  (+/-COMMAND#)
IF  YELLOW ON PHASE    #1  IS ON

            SCROLL DOWN

THEN:
SET OUTPUT  ASSIGNMENT #51 ON
```

NOTE: LOGIC FOR YELLOW ARROW CLEARANCE FROM PHASE 1 (HEAD 11).

PRESS '+'

```
  LOGICAL I/O COMMAND #4  (+/-COMMAND#)
IF  ACTIVE PHASE       #5  IS ON
AND RED CLEAR ON PHASE #5  IS ON

            SCROLL DOWN

THEN:
SET OUTPUT  ASSIGNMENT #42 ON
SET OUTPUT  ASSIGNMENT #43 OFF
```

NOTE: LOGIC FOR PHASE 5 RED CLEAR WHEN TRANSITIONING FROM PHASE 5 TO PHASE 6 (HEAD 51).

PRESS '+'

```
  LOGICAL I/O COMMAND #5  (+/-COMMAND#)
IF  ACTIVE PHASE       #5  IS ON

            SCROLL DOWN

THEN:
SET OUTPUT  ASSIGNMENT #44 OFF
```

NOTE: LOGIC FOR SWITCHING FLASHING YELLOW ARROW OFF DURING PHASE 5 (HEAD 51).

PRESS '+'

```
  LOGICAL I/O COMMAND #6  (+/-COMMAND#)
IF  YELLOW ON PHASE    #5  IS ON

            SCROLL DOWN

THEN:
SET OUTPUT  ASSIGNMENT #43 ON
```

NOTE: LOGIC FOR YELLOW ARROW CLEARANCE FROM PHASE 5 (HEAD 51).

LOGIC I/O PROCESSOR PROGRAMMING COMPLETE

COUNTDOWN PEDESTRIAN SIGNAL OPERATION

Countdown Ped Signals are required to display timing only during Ped Clearance Interval. Consult Ped Signal Module user's manual for instructions on selecting this feature.

OUTPUT REFERENCE SCHEDULE

USE TO INTERPRET LOGIC PROCESSOR

OUTPUT 42 = Overlap C Red
OUTPUT 43 = Overlap C Yellow
OUTPUT 44 = Overlap C Green
OUTPUT 50 = Overlap A Red
OUTPUT 51 = Overlap A Yellow
OUTPUT 52 = Overlap A Green

THIS ELECTRICAL DETAIL IS FOR
THE SIGNAL DESIGN: 03-0504
DESIGNED: Mar 2023
SEALED: 3-8-23
REVISED:

Final Design
Electrical Detail - Sheet 2 of 6

DOCUMENT NOT CONSIDERED FINAL UNLESS ALL SIGNATURES COMPLETED

ELECTRICAL AND PROGRAMMING DETAILS FOR:

NC 133 (River Road)
at
SR 1551 (Blackwell Road)

Division 3 | Brunswick County | Leland

PLAN DATE:	Mar 2023	REVIEWED BY:	H.M. Surti
PREPARED BY:	A. Ravipati	REVIEWED BY:	

REVISIONS	INIT.	DATE

SEAL
NORTH CAROLINA PROFESSIONAL SEAL 034481 ENGINEER HEMANG M. SURTI

DocuSigned by: Hemang M. Surti 3/8/2023

SIG. INVENTORY NO. 03-0504

Prepared for the Offices of:
Transportation Mobility and Safety Division
Traffic Engineering Branch
Traffic Signals Management Section
750 N.Greenfield Pkwy,Garner,NC 27529

AECOM
NC Firm License No.: F-0342
5438 Wade Park Boulevard
Suite 200 Raleigh, NC 27607
Phone: 919-461-1100

3/8/2023
pw://aecom-na-pw.bentley.com:AECOM_USA_North_Carolina/Documents/60512233-u-5914 - NC 133/900-CAD GIS/910_CAD/70_NCDOT_TIP/Traffic/Signals/Design/Signals/Electricals 2022/030504_sm_sig_2022XXXX.dgn
TindalM

DocuSign Envelope ID: EC232C59-1224-4D0C-B3D3-A4E7F3BA38C6

PROJECT REFERENCE NO.	SHEET NO.
U-5914	Sig. 3.3

OVERLAP PROGRAMMING DETAIL FOR DEFAULT PHASING

(program controller as shown below)

FROM MAIN MENU PRESS '8' (OVERLAPS), THEN '1' (VEHICLE OVERLAP SETTINGS).

```
 PAGE 1: VEHICLE OVERLAP 'A' SETTINGS
 PHASE:          |1234567891011121314151 6
VEH OVL PARENTS: |XX
VEH OVL NOT VEH: |
VEH OVL NOT PED: |
VEH OVL GRN EXT: |
STARTUP COLOR: _ RED  _ YELLOW  _ GREEN
FLASH COLORS:  _ RED  _ YELLOW  X GREEN
SELECT VEHICLE OVERLAP OPTIONS:   (Y/N)
FLASH YELLOW IN CONTROLLER FLASH?...Y
GREEN EXTENSION (0-255 SEC).........0
YELLOW CLEAR (0=PARENT,3-25.5 SEC)..0.0
RED CLEAR (0=PARENT,0.1-25.5 SEC)...0.0
OUTPUT AS PHASE # (0=NONE, 1-16)....0
```

← NOTICE GREEN FLASH

PRESS '+'

```
 PAGE 1: VEHICLE OVERLAP 'B' SETTINGS
 PHASE:          |1234567891011121314151 6
VEH OVL PARENTS: |X      X
VEH OVL NOT VEH: |
VEH OVL NOT PED: |
VEH OVL GRN EXT: |
STARTUP COLOR: _ RED  _ YELLOW  _ GREEN
FLASH COLORS:  _ RED  _ YELLOW  X GREEN
SELECT VEHICLE OVERLAP OPTIONS:   (Y/N)
FLASH YELLOW IN CONTROLLER FLASH?...N
GREEN EXTENSION (0-255 SEC).........0
YELLOW CLEAR (0=PARENT,3-25.5 SEC)..0.0
RED CLEAR (0=PARENT,0.1-25.5 SEC)...0.0
OUTPUT AS PHASE # (0=NONE, 1-16)....0
```

← NOTICE GREEN FLASH

PRESS '+'

```
 PAGE 1: VEHICLE OVERLAP 'C' SETTINGS
 PHASE:          |1234567891011121314151 6
VEH OVL PARENTS: |    XX
VEH OVL NOT VEH: |
VEH OVL NOT PED: |
VEH OVL GRN EXT: |
STARTUP COLOR: _ RED  _ YELLOW  _ GREEN
FLASH COLORS:  _ RED  _ YELLOW  X GREEN
SELECT VEHICLE OVERLAP OPTIONS:   (Y/N)
FLASH YELLOW IN CONTROLLER FLASH?...Y
GREEN EXTENSION (0-255 SEC).........0
YELLOW CLEAR (0=PARENT,3-25.5 SEC)..0.0
RED CLEAR (0=PARENT,0.1-25.5 SEC)...0.0
OUTPUT AS PHASE # (0=NONE, 1-16)....0
```

← NOTICE GREEN FLASH

PRESS '+'

```
 PAGE 1: VEHICLE OVERLAP 'D' SETTINGS
 PHASE:          |1234567891011121314151 6
VEH OVL PARENTS: | X      X
VEH OVL NOT VEH: |
VEH OVL NOT PED: |
VEH OVL GRN EXT: |
STARTUP COLOR: _ RED  _ YELLOW  _ GREEN
FLASH COLORS:  _ RED  _ YELLOW  X GREEN
SELECT VEHICLE OVERLAP OPTIONS:   (Y/N)
FLASH YELLOW IN CONTROLLER FLASH?...Y
GREEN EXTENSION (0-255 SEC).........0
YELLOW CLEAR (0=PARENT,3-25.5 SEC)..0.0
RED CLEAR (0=PARENT,0.1-25.5 SEC)...0.0
OUTPUT AS PHASE # (0=NONE, 1-16)....0
```

← NOTICE GREEN FLASH

OVERLAP PROGRAMMING COMPLETE

OVERLAP PROGRAMMING DETAIL FOR ALTERNATE PHASING

(program controller as shown below)

FROM MAIN MENU PRESS '8' (OVERLAPS), THEN '1' (VEHICLE OVERLAP SETTINGS). PRESS 'NEXT' TO ADVANCE TO PAGE 2.

NOTICE PAGE 2 →

```
 PAGE 2: VEHICLE OVERLAP 'A' SETTINGS
 PHASE:          |1234567891011121314151 6
VEH OVL PARENTS: |X
VEH OVL NOT VEH: |
VEH OVL NOT PED: |
VEH OVL GRN EXT: |
STARTUP COLOR: _ RED  _ YELLOW  _ GREEN
FLASH COLORS:  _ RED  _ YELLOW  _ GREEN
SELECT VEHICLE OVERLAP OPTIONS:   (Y/N)
FLASH YELLOW IN CONTROLLER FLASH?...Y
GREEN EXTENSION (0-255 SEC).........0
YELLOW CLEAR (0=PARENT,3-25.5 SEC)..0.0
RED CLEAR (0=PARENT,0.1-25.5 SEC)...0.0
OUTPUT AS PHASE # (0=NONE, 1-16)....0
```

PRESS '+'

NOTICE PAGE 2 →

```
 PAGE 2: VEHICLE OVERLAP 'B' SETTINGS
 PHASE:          |1234567891011121314151 6
VEH OVL PARENTS: |X      X
VEH OVL NOT VEH: |
VEH OVL NOT PED: |
VEH OVL GRN EXT: |
STARTUP COLOR: _ RED  _ YELLOW  _ GREEN
FLASH COLORS:  _ RED  _ YELLOW  X GREEN
SELECT VEHICLE OVERLAP OPTIONS:   (Y/N)
FLASH YELLOW IN CONTROLLER FLASH?...N
GREEN EXTENSION (0-255 SEC).........0
YELLOW CLEAR (0=PARENT,3-25.5 SEC)..0.0
RED CLEAR (0=PARENT,0.1-25.5 SEC)...0.0
OUTPUT AS PHASE # (0=NONE, 1-16)....0
```

← NOTICE GREEN FLASH

PRESS '+'

NOTICE PAGE 2 →

```
 PAGE 2: VEHICLE OVERLAP 'C' SETTINGS
 PHASE:          |1234567891011121314151 6
VEH OVL PARENTS: |    X
VEH OVL NOT VEH: |
VEH OVL NOT PED: |
VEH OVL GRN EXT: |
STARTUP COLOR: _ RED  _ YELLOW  _ GREEN
FLASH COLORS:  _ RED  _ YELLOW  _ GREEN
SELECT VEHICLE OVERLAP OPTIONS:   (Y/N)
FLASH YELLOW IN CONTROLLER FLASH?...Y
GREEN EXTENSION (0-255 SEC).........0
YELLOW CLEAR (0=PARENT,3-25.5 SEC)..0.0
RED CLEAR (0=PARENT,0.1-25.5 SEC)...0.0
OUTPUT AS PHASE # (0=NONE, 1-16)....0
```

PRESS '+'

NOTICE PAGE 2 →

```
 PAGE 2: VEHICLE OVERLAP 'D' SETTINGS
 PHASE:          |1234567891011121314151 6
VEH OVL PARENTS: | X      X
VEH OVL NOT VEH: |
VEH OVL NOT PED: |
VEH OVL GRN EXT: |
STARTUP COLOR: _ RED  _ YELLOW  _ GREEN
FLASH COLORS:  _ RED  _ YELLOW  X GREEN
SELECT VEHICLE OVERLAP OPTIONS:   (Y/N)
FLASH YELLOW IN CONTROLLER FLASH?...Y
GREEN EXTENSION (0-255 SEC).........0
YELLOW CLEAR (0=PARENT,3-25.5 SEC)..0.0
RED CLEAR (0=PARENT,0.1-25.5 SEC)...0.0
OUTPUT AS PHASE # (0=NONE, 1-16)....0
```

← NOTICE GREEN FLASH

OVERLAP PROGRAMMING COMPLETE

THIS ELECTRICAL DETAIL IS FOR
THE SIGNAL DESIGN: 03-0504
DESIGNED: Mar 2023
SEALED: 3-8-23
REVISED:

Final Design
Electrical Detail - Sheet 3 of 6

AECOM
NC Firm License No.: F-0342
5438 Wade Park Boulevard
Suite 200 Raleigh, NC 27607
Phone: 919-461-1100

ELECTRICAL AND PROGRAMMING DETAILS FOR:

Prepared for the Offices of:
Transportation Mobility and Safety Division
NC DEPARTMENT OF TRANSPORTATION
Traffic Engineering Branch
Signals Management Section
750 N.Greenfield Pkwy,Garner,NC 27529

NC 133 (River Road)
at
SR 1551 (Blackwell Road)

Division 3 | Brunswick County | Leland

PLAN DATE:	Mar 2023	REVIEWED BY:	H.M. Surti
PREPARED BY:	A. Ravipati	REVIEWED BY:	

REVISIONS	INIT.	DATE

DOCUMENT NOT CONSIDERED FINAL UNLESS ALL SIGNATURES COMPLETED

SEAL
NORTH CAROLINA PROFESSIONAL SEAL 034481 ENGINEER HEMANG M. SURTI

DocuSigned by:
Hemang M. Surti 3/8/2023
SIGNATURE(S)

SIG. INVENTORY NO. 03-0504

3/8/2023
pw://aecom-nc-pw.bentley.com:AECOM_USA_North_Carolina\Documents\60512233-u-5914 - NC 133\400-CAD GIS\910_CAD\70_NCDOT_TIP\Traffic\Signals\Design\Signals\Electricals 2022\030504_sm_sig_2022XXXX.dgn
Tindall M

DocuSign Envelope ID: EC232C59-1224-4D0C-B3D3-A4E7F3BA38C6

PROJECT REFERENCE NO.	SHEET NO.
U-5914	Sig. 3.4

INPUT PAGE 2 ASSIGNMENT PROGRAMMING DETAIL FOR ALTERNATE PHASING - LOOP 1A

(program controller as shown below)

NOTES: 1. THIS PROGRAMMING APPLIES FOR INPUT PAGE 2 ONLY. INPUT PAGE 1 WILL USE STANDARD DEFAULT SETTINGS. THIS PROGRAMMING IS NECESSARY FOR PROPER DETECTOR OPERATION DURING ALTERNATE PHASING OPERATION.

2. THE FIRST TASK THIS PROGRAMMING ACCOMPLISHES IS THE DISABLING OF INPUT #10 (DETECTOR 26) SO THAT A VEHICLE CALL WILL NOT BE PLACED TO PHASE 6 DURING ALTERNATE PHASING OPERATION. THE SECOND TASK THIS PROGRAMMING ACCOMPLISHES IS THAT IT REASSIGNS DETECTOR 51 TO INPUT #18 SO THAT THE DELAY ON LOOP 1A CAN BE REDUCED FROM 15 SECONDS TO 0 SECONDS.

FROM MAIN MENU PRESS '5' (INPUTS), THEN PRESS 'NEXT' TO GET TO INPUT PAGE '2'. PRESS THE '+' KEY UNTIL INPUT 10 IS REACHED.

```
PAGE: 2 C1 PIN:48  VEHICLE DETECTOR
INPUT ASSIGNMENT #.................10
DEBOUNCE TIME (0-25.5 SEC).........0.5
DELAY TIME (0-25.5 SEC).............0.0
HOLD-OVER TIME (0-25.5 SEC).........0.0
ASSIGNMENT SELECTION:
NOT ENABLED (Y/N)..................Y
VEHICLE DETECTOR (1-64).............26
PEDESTRIAN DETECTOR (1-16).........._
ALTERNATE PED DETECTOR (1-16)......._
PREEMPT (1-10)......................._
INVERTED PREEMPT (1-10).............._
STOP TIME (Y/N)......................_
FLASH SENSE (Y/N)...................._
DOOR OPEN (Y/N)......................_
MANUAL CONTROL ENABLE (Y/N).........._
MANUAL CONTROL ADVANCE (Y/N)........._
SPECIAL FUNCTION ALARM (1-8)........._
TOD HOUR SYCHRONIZATION (0-23)......._
FORCE OFF RING (1-4)................._
HOLD PHASES (1-16)..................._
PLAN (65=FLSH,66=FREE)..._  OFFSET#.._
CHANGE PHASE SEQUENCE PAGE (1-12)...._
CHANGE PHASE TIMING PAGE (1-4)......._
CHANGE PHASE CONTROL PAGE (1-4)......_
CHANGE OVERLAP CONTROL PAGE (1-4)...._
CHANGE INPUT PAGE (1-4).............._
CHANGE OUTPUT PAGE (1-4)............._
OVERRIDE PHASE CONTROL FUNCTION (Y)._
```

→ ENTER A 'Y' FOR NOT ENABLED →

DEFAULT DETECTOR NUMBER WILL REMAIN UNTIL 'NOT ENABLED' IS ENTERED.

(LOOP 1A - PHASE 6)

```
PAGE: 2 C1 PIN:48  NOT ENABLED
INPUT ASSIGNMENT #.................10
DEBOUNCE TIME (0-25.5 SEC).........0.5
DELAY TIME (0-25.5 SEC).............0.0
HOLD-OVER TIME (0-25.5 SEC).........0.0
ASSIGNMENT SELECTION:
NOT ENABLED (Y/N)..................Y
VEHICLE DETECTOR (1-64).............._
PEDESTRIAN DETECTOR (1-16).........._
ALTERNATE PED DETECTOR (1-16)......._
PREEMPT (1-10)......................._
INVERTED PREEMPT (1-10).............._
STOP TIME (Y/N)......................_
FLASH SENSE (Y/N)...................._
DOOR OPEN (Y/N)......................_
MANUAL CONTROL ENABLE (Y/N).........._
MANUAL CONTROL ADVANCE (Y/N)........._
SPECIAL FUNCTION ALARM (1-8)........._
TOD HOUR SYCHRONIZATION (0-23)......._
FORCE OFF RING (1-4)................._
HOLD PHASES (1-16)..................._
PLAN (65=FLSH,66=FREE)..._  OFFSET#.._
CHANGE PHASE SEQUENCE PAGE (1-12)...._
CHANGE PHASE TIMING PAGE (1-4)......._
CHANGE PHASE CONTROL PAGE (1-4)......_
CHANGE OVERLAP CONTROL PAGE (1-4)...._
CHANGE INPUT PAGE (1-4).............._
CHANGE OUTPUT PAGE (1-4)............._
OVERRIDE PHASE CONTROL FUNCTION (Y)._
```

PRESS '+' TO ADVANCE TO INPUT 18

```
PAGE: 2 C1 PIN:56  VEHICLE DETECTOR
INPUT ASSIGNMENT #.................18
DEBOUNCE TIME (0-25.5 SEC).........0.5
DELAY TIME (0-25.5 SEC).............0.0
HOLD-OVER TIME (0-25.5 SEC).........0.0
ASSIGNMENT SELECTION:
NOT ENABLED (Y/N)..................._
VEHICLE DETECTOR (1-64).............1
PEDESTRIAN DETECTOR (1-16).........._
ALTERNATE PED DETECTOR (1-16)......._
PREEMPT (1-10)......................._
INVERTED PREEMPT (1-10).............._
STOP TIME (Y/N)......................_
FLASH SENSE (Y/N)...................._
DOOR OPEN (Y/N)......................_
MANUAL CONTROL ENABLE (Y/N).........._
MANUAL CONTROL ADVANCE (Y/N)........._
SPECIAL FUNCTION ALARM (1-8)........._
TOD HOUR SYCHRONIZATION (0-23)......._
FORCE OFF RING (1-4)................._
HOLD PHASES (1-16)..................._
PLAN (65=FLSH,66=FREE)..._  OFFSET#.._
CHANGE PHASE SEQUENCE PAGE (1-12)...._
CHANGE PHASE TIMING PAGE (1-4)......._
CHANGE PHASE CONTROL PAGE (1-4)......_
CHANGE OVERLAP CONTROL PAGE (1-4)...._
CHANGE INPUT PAGE (1-4).............._
CHANGE OUTPUT PAGE (1-4)............._
OVERRIDE PHASE CONTROL FUNCTION (Y)._
```

ENTER '51' TO REASSIGN THE VEHICLE DETECTOR FOR THIS INPUT →

(LOOP 1A - PHASE 1)

```
PAGE: 2 C1 PIN:56  VEHICLE DETECTOR
INPUT ASSIGNMENT #.................18
DEBOUNCE TIME (0-25.5 SEC).........0.5
DELAY TIME (0-25.5 SEC).............0.0
HOLD-OVER TIME (0-25.5 SEC).........0.0
ASSIGNMENT SELECTION:
NOT ENABLED (Y/N)..................._
VEHICLE DETECTOR (1-64).............51
PEDESTRIAN DETECTOR (1-16).........._
ALTERNATE PED DETECTOR (1-16)......._
PREEMPT (1-10)......................._
INVERTED PREEMPT (1-10).............._
STOP TIME (Y/N)......................_
FLASH SENSE (Y/N)...................._
DOOR OPEN (Y/N)......................_
MANUAL CONTROL ENABLE (Y/N).........._
MANUAL CONTROL ADVANCE (Y/N)........._
SPECIAL FUNCTION ALARM (1-8)........._
TOD HOUR SYCHRONIZATION (0-23)......._
FORCE OFF RING (1-4)................._
HOLD PHASES (1-16)..................._
PLAN (65=FLSH,66=FREE)..._  OFFSET#.._
CHANGE PHASE SEQUENCE PAGE (1-12)...._
CHANGE PHASE TIMING PAGE (1-4)......._
CHANGE PHASE CONTROL PAGE (1-4)......_
CHANGE OVERLAP CONTROL PAGE (1-4)...._
CHANGE INPUT PAGE (1-4).............._
CHANGE OUTPUT PAGE (1-4)............._
OVERRIDE PHASE CONTROL FUNCTION (Y)._
```

PROGRAMMING COMPLETE

SPECIAL DETECTOR PROGRAMMING DETAIL - LOOP 1A (ALT.)

(program controller as shown below)

FROM MAIN MENU PRESS '7' (DETECTORS), THEN PRESS '1' FOR VEHICLE DETECTORS. PRESS THE '-' KEY TO GET TO VEHICLE DETECTOR #51.

```
VEHICLE DETECTOR #51  SETTINGS (+-,1-64)
SETTING:                          (Y/N)
ENABLE DETECTOR.....................N
ENABLE LOGGING......................N
ENABLE DIAGNOSTICS..................N
SPEED TRAP..........................N
CALL DETECTOR.......................Y
EXTENSION DETECTOR..................Y
MODE 2 STOP BAR.....................N
SWITCHING DETECTOR..................N
DUPLICATING DETECTOR................N
ENABLE FULL TIME DELAY..............N
IF FAILED, SET MIN RECALL?..........N
IF FAILED, SET MAX1 RECALL?.........N
IF FAILED, SET MAX2 RECALL?.........N
PHASE#          ¦12345678910111213141516
PHASES ASSIGNED ¦
SWITCH/DUPLICATE¦
LOOP SIZE (0-255 FT)................6
SPEED TRAP DISTANCE (0-255 FT)......0
STOP BAR TIME (0-255 SEC)...........0
STRETCH (0-25.5 SEC)................0.0
DELAY (0-255 SEC)...................0
MAX CALLS/MIN (0-255)..............255
MIN CALLS/DIAGNOSTIC PERIOD (0-255).0
MAX OCCUPANCY (0-100%).............100
EXTENSION DISABLE TIME (0-255 SEC)..0
QUEUE MAX OCCUPANCY TIME (0-255)....0
QUEUE GAP RESET TIME (0-25.5).......0.0
PREEMPTION INDEX FOR QUEUE (0-10)...0
```

→ ENTER 'Y' FOR ENABLE DETECTOR →

→ ENTER '1' FOR PHASES ASSIGNED →

→ ENSURE DELAY IS '0' →

```
VEHICLE DETECTOR #51  SETTINGS (+-,1-64)
SETTING:                          (Y/N)
ENABLE DETECTOR.....................Y
ENABLE LOGGING......................N
ENABLE DIAGNOSTICS..................N
SPEED TRAP..........................N
CALL DETECTOR.......................Y
EXTENSION DETECTOR..................Y
MODE 2 STOP BAR.....................N
SWITCHING DETECTOR..................N
DUPLICATING DETECTOR................N
ENABLE FULL TIME DELAY..............N
IF FAILED, SET MIN RECALL?..........N
IF FAILED, SET MAX1 RECALL?.........N
IF FAILED, SET MAX2 RECALL?.........N
PHASE#          ¦12345678910111213141516
PHASES ASSIGNED ¦X
SWITCH/DUPLICATE¦
LOOP SIZE (0-255 FT)................6
SPEED TRAP DISTANCE (0-255 FT)......0
STOP BAR TIME (0-255 SEC)...........0
STRETCH (0-25.5 SEC)................0.0
DELAY (0-255 SEC)...................0
MAX CALLS/MIN (0-255)..............255
MIN CALLS/DIAGNOSTIC PERIOD (0-255).0
MAX OCCUPANCY (0-100%).............100
EXTENSION DISABLE TIME (0-255 SEC)..0
QUEUE MAX OCCUPANCY TIME (0-255)....0
QUEUE GAP RESET TIME (0-25.5).......0.0
PREEMPTION INDEX FOR QUEUE (0-10)...0
```

DETECTOR PROGRAMMING COMPLETE

NOTE: DETECTOR IS PROGRAMMED PER THE INPUT FILE CONNECTION AND PROGRAMMING CHART SHOWN ON SHEET 1.

THIS ELECTRICAL DETAIL IS FOR THE SIGNAL DESIGN: 03-0504
DESIGNED: Mar 2023
SEALED: 3-8-23
REVISED:

AECOM
NC Firm License No.: F-0342
5438 Wade Park Boulevard
Suite 200 Raleigh, NC 27607
Phone: 919-461-1100

Final Design
Electrical Detail - Sheet 4 of 6

DOCUMENT NOT CONSIDERED FINAL UNLESS ALL SIGNATURES COMPLETED

ELECTRICAL AND PROGRAMMING DETAILS FOR:

Prepared for the Offices of:
Transportation Mobility and Safety Division
NC DEPARTMENT OF TRANSPORTATION
Traffic Engineering & Signals Management Section
750 N.Greenfield Pkwy,Garner,NC 27529

NC 133 (River Road)
at
SR 1551 (Blackwell Road)

Division 3 | Brunswick County | Leland

PLAN DATE:	Mar 2023	REVIEWED BY:	H.M. Surti
PREPARED BY:	A. Ravipati	REVIEWED BY:	

REVISIONS	INIT.	DATE

SEAL
NORTH CAROLINA PROFESSIONAL SEAL 034481 ENGINEER HEMANG M. SURTI

DocuSigned by: Hemang M. Surti 3/8/2023
SIG. INVENTORY NO. 03-0504

3/8/2023
pe:#acadm-ng-pw.bentley.com:AECOM_USA_North_Carolina\Documents\60512233-U-5914 - NC 133\900-CAD Gis\910_CAD\70_NCDOT_TIP\Traffic\Signals\Design\Signals\Electricals 2022\030504_sm_sig_2022XWX.dgn
Tindol M

DocuSign Envelope ID: EC232C59-1224-4D0C-B3D3-A4E7F3BA38C6

PROJECT REFERENCE NO.	SHEET NO.
U-5914	Sig. 3.5

INPUT PAGE 2 ASSIGNMENT PROGRAMMING DETAIL FOR ALTERNATE PHASING - LOOP 5A

(program controller as shown below)

NOTES: 1. THIS PROGRAMMING APPLIES FOR INPUT PAGE 2 ONLY. INPUT PAGE 1 WILL USE STANDARD DEFAULT SETTINGS. THIS PROGRAMMING IS NECESSARY FOR PROPER DETECTOR OPERATION DURING ALTERNATE PHASING OPERATION.

2. THE FIRST TASK THIS PROGRAMMING ACCOMPLISHES IS THE DISABLING OF INPUT #9 (DETECTOR 22) SO THAT A VEHICLE CALL WILL NOT BE PLACED TO PHASE 2 DURING ALTERNATE PHASING OPERATION. THE SECOND TASK THIS PROGRAMMING ACCOMPLISHES IS THAT IT REASSIGNS DETECTOR 55 TO INPUT #17 SO THAT THE DELAY ON LOOP 5A CAN BE REDUCED FROM 15 SECONDS TO 0 SECONDS.

FROM MAIN MENU PRESS '5' (INPUTS), THEN PRESS 'NEXT' TO GET TO INPUT PAGE '2'. PRESS THE '+' KEY UNTIL INPUT 9 IS REACHED.

```
PAGE: 2 C1 PIN:47  VEHICLE DETECTOR
INPUT ASSIGNMENT #.................9
DEBOUNCE TIME (0-25.5 SEC).........0.5
DELAY TIME (0-25.5 SEC).............0.0
HOLD-OVER TIME (0-25.5 SEC).........0.0
ASSIGNMENT SELECTION:
NOT ENABLED (Y/N)...................Y
VEHICLE DETECTOR (1-64).............22
PEDESTRIAN DETECTOR (1-16).........._
ALTERNATE PED DETECTOR (1-16)........_
PREEMPT (1-10)......................._
INVERTED PREEMPT (1-10).............._
STOP TIME (Y/N)......................_
FLASH SENSE (Y/N)...................._
DOOR OPEN (Y/N)......................_
MANUAL CONTROL ENABLE (Y/N).........._
MANUAL CONTROL ADVANCE (Y/N)........._
SPECIAL FUNCTION ALARM (1-8)........._
TOD HOUR SYCHRONIZATION (0-23)......._
FORCE OFF RING (1-4)................._
HOLD PHASES (1-16)..................._
PLAN (65=FLSH,66=FREE)..._  OFFSET#.._
CHANGE PHASE SEQUENCE PAGE (1-12)...._
CHANGE PHASE TIMING PAGE (1-4)......._
CHANGE PHASE CONTROL PAGE (1-4)......_
CHANGE OVERLAP CONTROL PAGE (1-4)...._
CHANGE INPUT PAGE (1-4).............._
CHANGE OUTPUT PAGE (1-4)............._
OVERRIDE PHASE CONTROL FUNCTION (Y)._
```

→ ENTER A 'Y' FOR NOT ENABLED →

DEFAULT DETECTOR NUMBER WILL REMAIN UNTIL 'NOT ENABLED' IS ENTERED.

```
PAGE: 2 C1 PIN:47  NOT ENABLED
INPUT ASSIGNMENT #.................9
DEBOUNCE TIME (0-25.5 SEC).........0.5
DELAY TIME (0-25.5 SEC).............0.0
HOLD-OVER TIME (0-25.5 SEC).........0.0
ASSIGNMENT SELECTION:
NOT ENABLED (Y/N)...................Y
VEHICLE DETECTOR (1-64).............._
PEDESTRIAN DETECTOR (1-16).........._
ALTERNATE PED DETECTOR (1-16)........_
PREEMPT (1-10)......................._
INVERTED PREEMPT (1-10).............._
STOP TIME (Y/N)......................_
FLASH SENSE (Y/N)...................._
DOOR OPEN (Y/N)......................_
MANUAL CONTROL ENABLE (Y/N).........._
MANUAL CONTROL ADVANCE (Y/N)........._
SPECIAL FUNCTION ALARM (1-8)........._
TOD HOUR SYCHRONIZATION (0-23)......._
FORCE OFF RING (1-4)................._
HOLD PHASES (1-16)..................._
PLAN (65=FLSH,66=FREE)..._  OFFSET#.._
CHANGE PHASE SEQUENCE PAGE (1-12)...._
CHANGE PHASE TIMING PAGE (1-4)......._
CHANGE PHASE CONTROL PAGE (1-4)......_
CHANGE OVERLAP CONTROL PAGE (1-4)...._
CHANGE INPUT PAGE (1-4).............._
CHANGE OUTPUT PAGE (1-4)............._
OVERRIDE PHASE CONTROL FUNCTION (Y)._
```

(LOOP 5A - PHASE 2)

PRESS '+' TO ADVANCE TO INPUT 17

```
PAGE: 2 C1 PIN:55  VEHICLE DETECTOR
INPUT ASSIGNMENT #.................17
DEBOUNCE TIME (0-25.5 SEC).........0.5
DELAY TIME (0-25.5 SEC).............0.0
HOLD-OVER TIME (0-25.5 SEC).........0.0
ASSIGNMENT SELECTION:
NOT ENABLED (Y/N)...................._
VEHICLE DETECTOR (1-64).............5
PEDESTRIAN DETECTOR (1-16).........._
ALTERNATE PED DETECTOR (1-16)........_
PREEMPT (1-10)......................._
INVERTED PREEMPT (1-10).............._
STOP TIME (Y/N)......................_
FLASH SENSE (Y/N)...................._
DOOR OPEN (Y/N)......................_
MANUAL CONTROL ENABLE (Y/N).........._
MANUAL CONTROL ADVANCE (Y/N)........._
SPECIAL FUNCTION ALARM (1-8)........._
TOD HOUR SYCHRONIZATION (0-23)......._
FORCE OFF RING (1-4)................._
HOLD PHASES (1-16)..................._
PLAN (65=FLSH,66=FREE)..._  OFFSET#.._
CHANGE PHASE SEQUENCE PAGE (1-12)...._
CHANGE PHASE TIMING PAGE (1-4)......._
CHANGE PHASE CONTROL PAGE (1-4)......_
CHANGE OVERLAP CONTROL PAGE (1-4)...._
CHANGE INPUT PAGE (1-4).............._
CHANGE OUTPUT PAGE (1-4)............._
OVERRIDE PHASE CONTROL FUNCTION (Y)._
```

→ ENTER '55' TO REASSIGN THE VEHICLE DETECTOR FOR THIS INPUT →

(LOOP 5A - PHASE 5)

```
PAGE: 2 C1 PIN:55  VEHICLE DETECTOR
INPUT ASSIGNMENT #.................17
DEBOUNCE TIME (0-25.5 SEC).........0.5
DELAY TIME (0-25.5 SEC).............0.0
HOLD-OVER TIME (0-25.5 SEC).........0.0
ASSIGNMENT SELECTION:
NOT ENABLED (Y/N)...................._
VEHICLE DETECTOR (1-64).............55
PEDESTRIAN DETECTOR (1-16).........._
ALTERNATE PED DETECTOR (1-16)........_
PREEMPT (1-10)......................._
INVERTED PREEMPT (1-10).............._
STOP TIME (Y/N)......................_
FLASH SENSE (Y/N)...................._
DOOR OPEN (Y/N)......................_
MANUAL CONTROL ENABLE (Y/N).........._
MANUAL CONTROL ADVANCE (Y/N)........._
SPECIAL FUNCTION ALARM (1-8)........._
TOD HOUR SYCHRONIZATION (0-23)......._
FORCE OFF RING (1-4)................._
HOLD PHASES (1-16)..................._
PLAN (65=FLSH,66=FREE)..._  OFFSET#.._
CHANGE PHASE SEQUENCE PAGE (1-12)...._
CHANGE PHASE TIMING PAGE (1-4)......._
CHANGE PHASE CONTROL PAGE (1-4)......_
CHANGE OVERLAP CONTROL PAGE (1-4)...._
CHANGE INPUT PAGE (1-4).............._
CHANGE OUTPUT PAGE (1-4)............._
OVERRIDE PHASE CONTROL FUNCTION (Y)._
```

PROGRAMMING COMPLETE

SPECIAL DETECTOR PROGRAMMING DETAIL - LOOP 5A (ALT.)

(program controller as shown below)

FROM MAIN MENU PRESS '7' (DETECTORS), THEN PRESS '1' FOR VEHICLE DETECTORS. PRESS THE '-' KEY TO GET TO VEHICLE DETECTOR #55.

```
VEHICLE DETECTOR #55  SETTINGS (+-.1-64)
SETTING:                          (Y/N)
ENABLE DETECTOR.....................N
ENABLE LOGGING......................N
ENABLE DIAGNOSTICS..................N
SPEED TRAP..........................N
CALL DETECTOR.......................Y
EXTENSION DETECTOR..................Y
MODE 2 STOP BAR.....................N
SWITCHING DETECTOR..................N
DUPLICATING DETECTOR................N
ENABLE FULL TIME DELAY..............N
IF FAILED, SET MIN RECALL?..........N
IF FAILED, SET MAX1 RECALL?.........N
IF FAILED, SET MAX2 RECALL?.........N
PHASE#          ¦12345678910111213141516
PHASES ASSIGNED ¦
SWITCH/DUPLICATE¦
LOOP SIZE (0-255 FT).................6
SPEED TRAP DISTANCE (0-255 FT)......0
STOP BAR TIME (0-255 SEC)...........0
STRETCH (0-25.5 SEC)................0.0
DELAY (0-255 SEC)...................0
MAX CALLS/MIN (0-255)..............255
MIN CALLS/DIAGNOSTIC PERIOD (0-255).0
MAX OCCUPANCY (0-100%).............100
EXTENSION DISABLE TIME (0-255 SEC)..0
QUEUE MAX OCCUPANCY TIME (0-255)....0
QUEUE GAP RESET TIME (0-25.5).......0.0
PREEMPTION INDEX FOR QUEUE (0-10)...0
```

→ ENTER 'Y' FOR ENABLE DETECTOR →

→ ENTER '5' FOR PHASES ASSIGNED →

→ ENSURE DELAY IS '0' →

```
VEHICLE DETECTOR #55  SETTINGS (+-.1-64)
SETTING:                          (Y/N)
ENABLE DETECTOR.....................Y
ENABLE LOGGING......................N
ENABLE DIAGNOSTICS..................N
SPEED TRAP..........................N
CALL DETECTOR.......................Y
EXTENSION DETECTOR..................Y
MODE 2 STOP BAR.....................N
SWITCHING DETECTOR..................N
DUPLICATING DETECTOR................N
ENABLE FULL TIME DELAY..............N
IF FAILED, SET MIN RECALL?..........N
IF FAILED, SET MAX1 RECALL?.........N
IF FAILED, SET MAX2 RECALL?.........N
PHASE#          ¦12345678910111213141516
PHASES ASSIGNED ¦    X
SWITCH/DUPLICATE¦
LOOP SIZE (0-255 FT).................6
SPEED TRAP DISTANCE (0-255 FT)......0
STOP BAR TIME (0-255 SEC)...........0
STRETCH (0-25.5 SEC)................0.0
DELAY (0-255 SEC)...................0
MAX CALLS/MIN (0-255)..............255
MIN CALLS/DIAGNOSTIC PERIOD (0-255).0
MAX OCCUPANCY (0-100%).............100
EXTENSION DISABLE TIME (0-255 SEC)..0
QUEUE MAX OCCUPANCY TIME (0-255)....0
QUEUE GAP RESET TIME (0-25.5).......0.0
PREEMPTION INDEX FOR QUEUE (0-10)...0
```

DETECTOR PROGRAMMING COMPLETE

NOTE: DETECTOR IS PROGRAMMED PER THE INPUT FILE CONNECTION AND PROGRAMMING CHART SHOWN ON SHEET 1.

THIS ELECTRICAL DETAIL IS FOR THE SIGNAL DESIGN: 03-0504
DESIGNED: Mar 2023
SEALED: 3-8-23
REVISED:

AECOM
NC Firm License No.: F-0342
5438 Wade Park Boulevard
Suite 200 Raleigh, NC 27607
Phone: 919-461-1100

Final Design
Electrical Detail - Sheet 5 of 6

DOCUMENT NOT CONSIDERED FINAL UNLESS ALL SIGNATURES COMPLETED

ELECTRICAL AND PROGRAMMING DETAILS FOR:

Prepared for the Offices of:
NC Department of Transportation — Transportation Mobility and Safety Division — Traffic Engineering Branch — Signal Management Section
750 N.Greenfield Pkwy,Garner,NC 27529

NC 133 (River Road)
at
SR 1551 (Blackwell Road)

Division 3 | Brunswick County | Leland

PLAN DATE:	Mar 2023	REVIEWED BY:	H.M. Surti
PREPARED BY:	A. Ravipati	REVIEWED BY:	

REVISIONS	INIT.	DATE

SEAL
NORTH CAROLINA PROFESSIONAL SEAL 034481 ENGINEER HEMANG M. SURTI

DocuSigned by: Hemang M. Surti 3/8/2023
SIG. INVENTORY NO. 03-0504

3/8/2023
pw:\\aecom-nc-pw.bentley.com:AECOM_USA_North_Carolina\Documents\60512233-U-5914 - NC 133\900-CAD GIS\910_CAD\70_NCDOT_TIP\Traffic\Signals\Design\Signals\Electrical\303504_sm_sig_2022XXXX.dgn
tlindoim

DocuSign Envelope ID: EC232C59-1224-4D0C-B3D3-A4E7F3BA38C6

PROJECT REFERENCE NO.	SHEET NO.
U-5914	Sig. 3.6

ALTERNATE PHASING ACTIVATION DETAIL

TO RUN ALT. PHASING DURING COORDINATION - SELECT ALL PAGE CHANGES (AS SHOWN BELOW) WITHIN COORDINATION PLAN PROGRAMMING.

TO RUN ALT. PHASING DURING FREE RUN - PROGRAM PAGE CHANGES (SHOWN BELOW) IN SEPARATE TIME OF DAY EVENTS. IF PAGE 1 IS USED, NO EVENT PROGRAMMING IS NECESSARY FOR THAT PARTICULAR PAGE.

PHASING	INPUTS PAGE	OVERLAPS PAGE
ACTIVE PAGES REQUIRED TO RUN DEFAULT PHASING	1	1
ACTIVE PAGES REQUIRED TO RUN ALTERNATE PHASING	2	2

NOTE: PAGES NOT SHOWN (i.e. sequence, phase control, etc.) SHOULD REMAIN AS '1', OR AS DEFINED BY TIMING ENGINEER.

IMPORTANT: IF ALT. PHASING IS USED DURING FREE RUN AND COORDINATION, DO NOT OPERATE TIME OF DAY PAGE CHANGE EVENTS CONCURRENTLY WITH COORDINATION PLAN EVENTS IN THE EVENT SCHEDULER. (EX. FREE RUN PAGE CHANGE EVENT SHOULD END BEFORE COORDINATION PLAN EVENT STARTS AND VICE-VERSA).

ALTERNATE PHASING PAGE CHANGE SUMMARY

THE FOLLOWING IS A SUMMARY OF WHAT TAKES PLACE WHEN THESE OVERLAP/INPUT PAGE CHANGES ACTIVATE TO CALL THE "ALTERNATE PHASING":

OVERLAPS PAGE 2: Modifies overlap parent phases for heads 11 and 51 to run protected turns only.

INPUTS PAGE 2: Disables phase 6 call on loop 1A and reduces delay time for phase 1 call on loop 1A to 0 seconds.

Disables phase 2 call on loop 5A and reduces delay time for phase 5 call on loop 5A to 0 seconds.

FLASHER CIRCUIT MODIFICATION DETAIL

IN ORDER TO INSURE THAT SIGNALS FLASH CONCURRENTLY ON THE SAME APPROACH, MAKE THE FOLLOWING FLASHER CIRCUIT CHANGES:

1. ON REAR OF PDA - REMOVE WIRE FROM TERM. T2-4 AND TERMINATE ON T2-2.
2. ON REAR OF PDA - REMOVE WIRE FROM TERM. T2-5 AND TERMINATE ON T2-3.
3. REMOVE FLASHER UNIT 2.

THE CHANGES LISTED ABOVE TIES ALL PHASES AND OVERLAPS TO FLASHER UNIT 1.

THIS ELECTRICAL DETAIL IS FOR
THE SIGNAL DESIGN: 03-0504
DESIGNED: Mar 2023
SEALED: 3-8-23
REVISED:

Final Design
Electrical Detail - Sheet 6 of 6

DOCUMENT NOT CONSIDERED FINAL UNLESS ALL SIGNATURES COMPLETED

AECOM
NC Firm License No.: F-0342
5438 Wade Park Boulevard
Suite 200 Raleigh, NC 27607
Phone: 919-461-1100

ELECTRICAL AND PROGRAMMING DETAILS FOR:

Prepared for the Offices of:
NC Department of Transportation Transportation Mobility and Safety Division Traffic Engineering Branch Signals Management Section
750 N.Greenfield Pkwy,Garner,NC 27529

NC 133 (River Road)
at
SR 1551 (Blackwell Road)

Division 3 | Brunswick County | Leland

PLAN DATE:	Mar 2023	REVIEWED BY:	H.M. Surti
PREPARED BY:	A. Ravipati	REVIEWED BY:	

REVISIONS	INIT.	DATE

SEAL
NORTH CAROLINA PROFESSIONAL SEAL 034481 ENGINEER HEMANG M. SURTI

DocuSigned by: Hemang M. Surti 3/8/2023

PROFESSIONAL ENGINEER SIG. INVENTORY NO. 03-0504

3/8/2023
pw://ecom-na-pw.bentley.com:AECOM_USA_North_Carolina#Documents#60512233-U-5914 - NC 133#900-CAD GIS#910_CAD#70_NCDOT_TIP#Traffic#Signals#Design#Signals#Electricals 2022#030504_sm_ele_2022XXXX.dgn
TindolM

DocuSign Envelope ID: EC232C59-1224-4D0C-B3D3-A4E7F3BA38C6

NCDOT METAL POLE STANDARDS

STATE OF NORTH CAROLINA
DIVISION OF HIGHWAYS

PROJECT I.D. NO.	SHEET NO.
U-5914	Sig.M1

STANDARD DRAWINGS FOR ALL METAL POLES

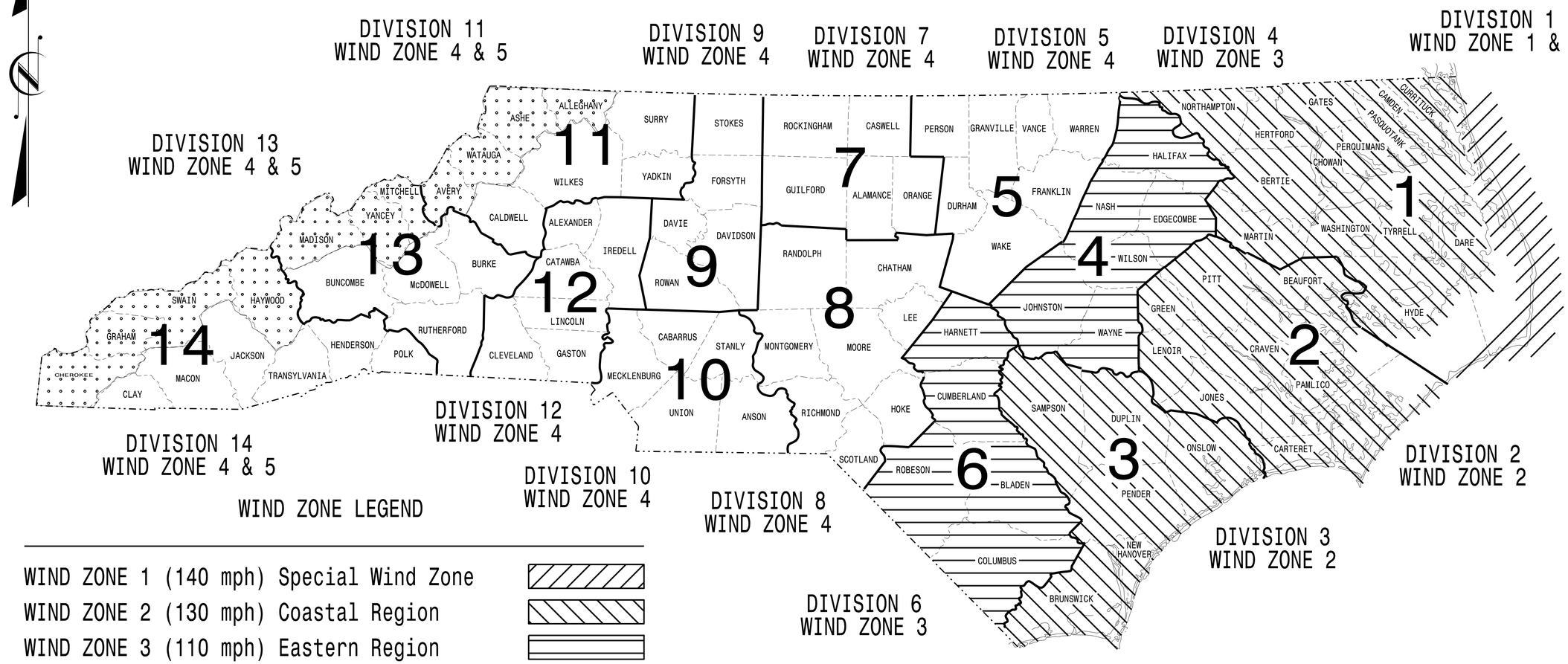

WIND ZONE LEGEND

WIND ZONE 1 (140 mph) Special Wind Zone	
WIND ZONE 2 (130 mph) Coastal Region	
WIND ZONE 3 (110 mph) Eastern Region	
WIND ZONE 4 (90 mph) Central & Mtn. Region	
WIND ZONE 5 (120 mph) Special Wind Zone	

https://connect.ncdot.gov/resources/safety/Pages/ITS-Design-Resources.aspx

Prepared in the Offices of:
Transportation Mobility and Safety Division
Signal Design Section
750 N.Greenfield Pkwy.
Garner,NC 27529

Designed in conformance with the latest 2015 Interim to the 6th Edition 2013
AASHTO
Standard Specifications for Structural Supports for Highway Signs, Luminaires, and Traffic Signals

INDEX OF PLANS

DRAWING NUMBER	DESCRIPTION
Sig. M 1	Statewide Wind Zone Map
Sig. M 2	Typical Fabrication Details–All Metal Poles
Sig. M 3	Typical Fabrication Details–Strain Poles
Sig. M 4	Typical Fabrication Details–Mast Arm Poles
Sig. M 5	Typical Fabrication Details–Mast Arm Connection
Sig. M 6	Typical Fabrication Details–Strain Pole Attachments
Sig. M 7	Construction Details–Foundations
Sig. M 8	Standard Strain Pole Foundation–All Soil Conditions

NCDOT CONTACTS:

MOBILITY AND SAFETY DIVISION – ITS AND SIGNALS UNIT

M.M. MCDIARMID, P.E. – STATE ITS AND SIGNALS ENGINEER

J. P. GALLOWAY, P.E. – STATE SIGNALS ENGINEER

D.C. SARKAR, P.E. – ITS AND SIGNALS SENIOR STRUCTURAL ENGINEER

SEAL

NORTH CAROLINA PROFESSIONAL SEAL 028094 ENGINEER DIBESH C. SARKAR

Docu Signed by: Dibesh C. Sarkar
4AE8E53E9F5B4CF... SIGNATURE

10/11/2017 DATE

DocuSign Envelope ID: EC232C59-1224-4D0C-B3D3-A4E7F3BA38C6

PROJECT ID. NO.	SHEET NO.
U-5914	Sig.M2

Fabrication Details – All Metal Poles

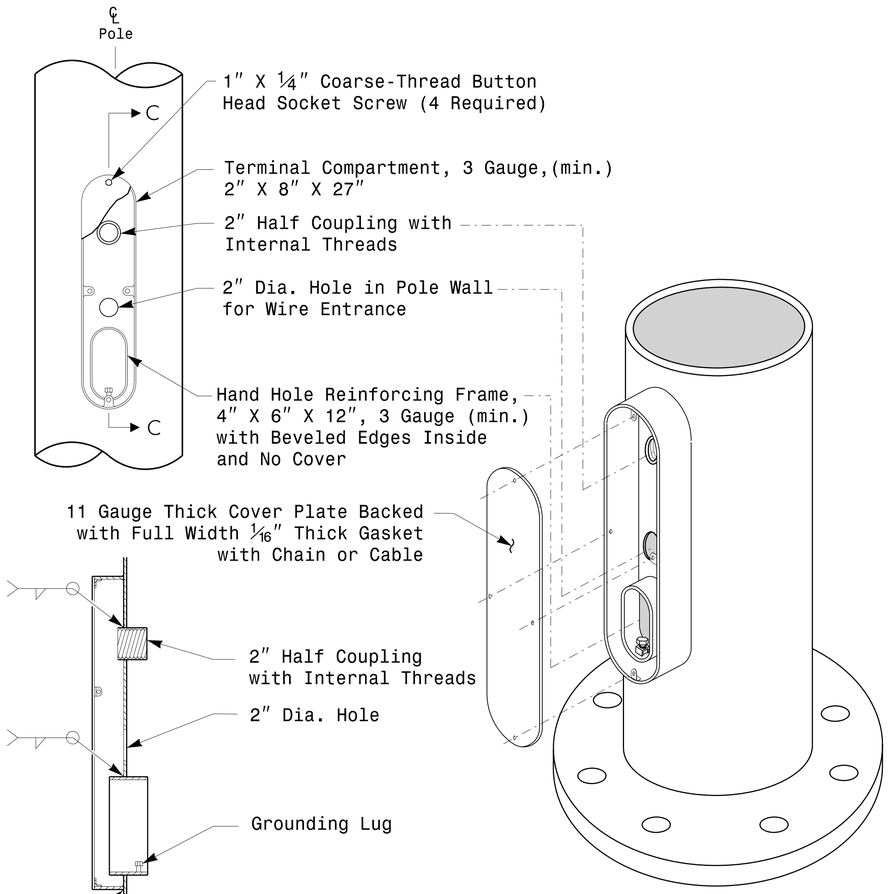

Section C-C

Note: Unless otherwise specified, locate Terminal Compartment 1 foot above the pole base plate at 180 degrees on the pole's radial index.

Terminal Compartment Detail

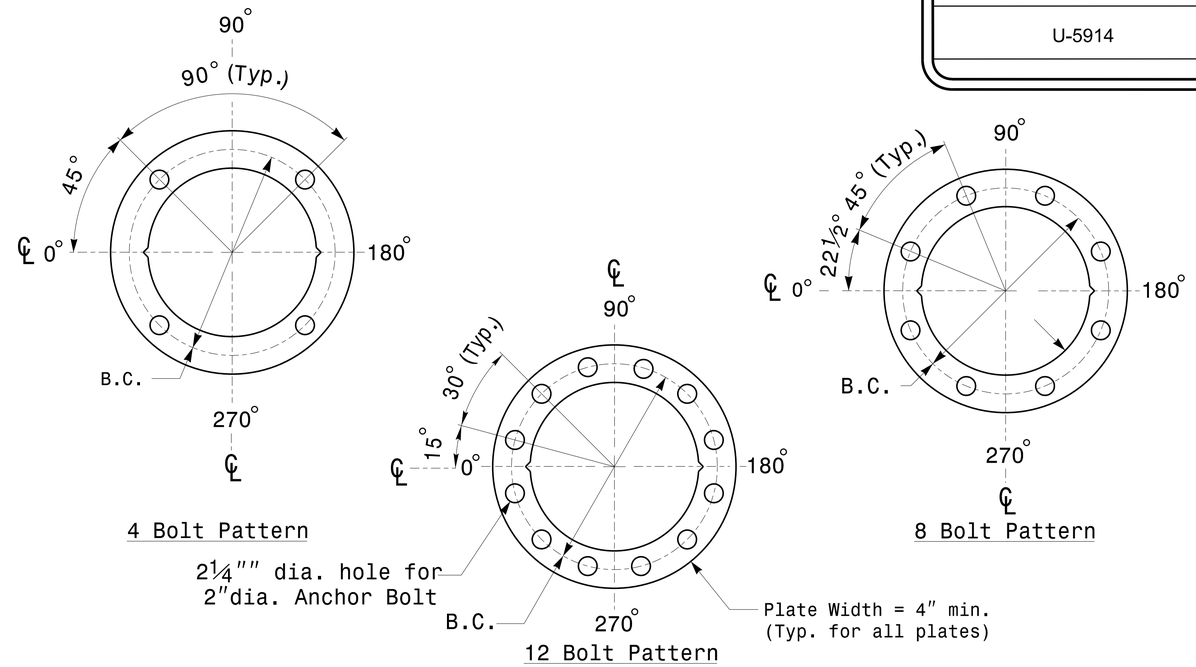

Construct Templates and Plates from ¼" min. thick Steel. Galvanizing is not required.

Base Plate Template and Anchor Bolt Lock Plate Details

MFG _____ MFG. DATE: MM/YY
SHAFT D/T/L/Y ----/----/----/----
ARM-A D/T/L/Y ----/----/----/----
----/----/----/----
ARM-B D/T/L/Y ----/----/----/----
----/----/----/----
A.B. DIA./B.C./L/Y ----/----/----/----
NCDOT SIG. INV. NO. _____
NCDOT POLE NO. _____

Shaft I.D. Tag
(Provide on Shaft of Strain Poles and Mast Arm Poles Shaft)

MFG _____ MFG. DATE: MM/YY
SECTION D/T/L/Y ----/----/----/----
NCDOT SIG. INV. NO. _____
NCDOT POLE NO. _____

Arm I.D. Tag
(Provide on each section of a multi-section mast arm.)

Notes:
1) D= Diameter, T= Thickness, L= Length, Y= Yield Strength
2) A.B. = Anchor Bolt
3) B.C. = Bolt Circle of Anchor Bolts
4) If Custom Design, use "NCDOT STANDARD" line for Signal Inv. Number and pole I.D. number
5) See drawing M3 and M4 for mounting positions of I.D. tags.

Identification Tag Details

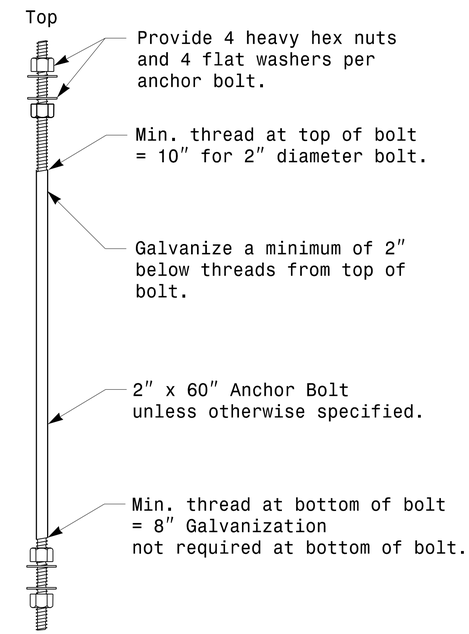

Anchor Bolt Detail

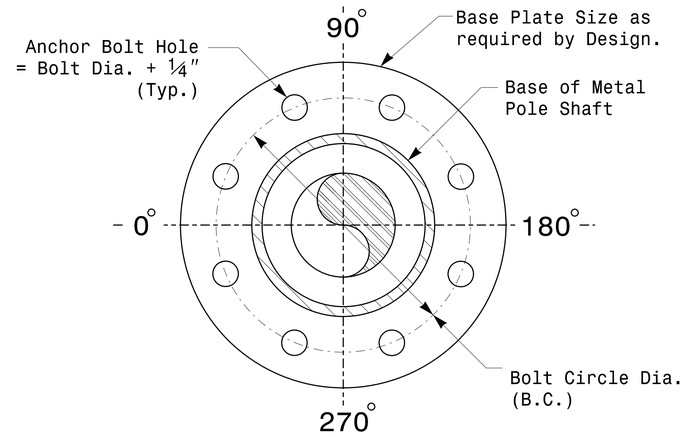

Note: Base plate may be circular,octagonal,square or rectangular in shape.

Typical Base Plate Detail

Prepared in the Offices of:
Transportation Mobility and Safety Division
Signal Design Section
750 N.Greenfield Pkwy.Garner,NC 27529

SCALE
0 NA
NONE

Typical Fabrication Details For All Metal Poles

PLAN DATE:	OCTOBER 2017	DESIGNED BY:	C.F.ANDREWS
PREPARED BY:	N. BITTING	REVIEWED BY:	D.C. SARKAR

REVISIONS	INIT.	DATE

SEAL
NORTH CAROLINA PROFESSIONAL SEAL 028094 ENGINEER DEBESH C. SARKAR

DocuSigned by: Debesh C. Sarkar
44E8E32B4F764C4...
SIGNATURE
10/11/2017
DATE

11-OCT-2017 08:30
S:\ITS&SU\ITS Signals\Signal Design Section\Eastern Region\M Sheets\2016\2014 Sig.M2 Std. Fabrication Details-All Poles..dgn
rnzinser

DocuSign Envelope ID: EC232C59-1224-4D0C-B3D3-A4E7F3BA38C6

PROJECT ID. NO.	SHEET NO.
U-5914	Sig.M3

Fabrication Details – Strain Poles

Note:
1. Opening in pole base plate shall be equal to pole base inside diameter minus 3½" but shall not be less than 8½".

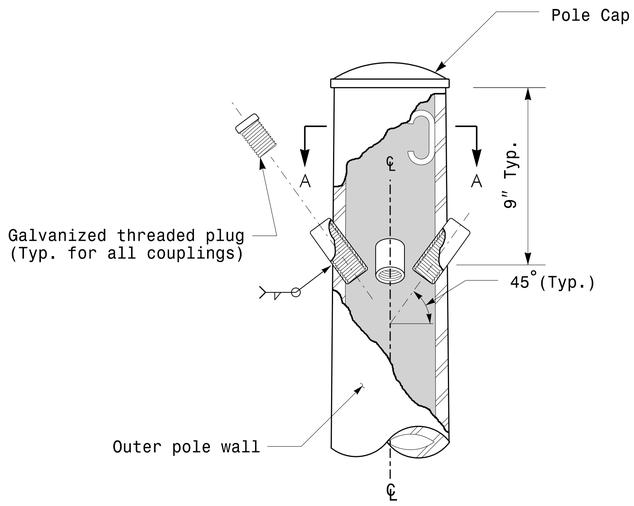

Cable Entrances at Top of Pole

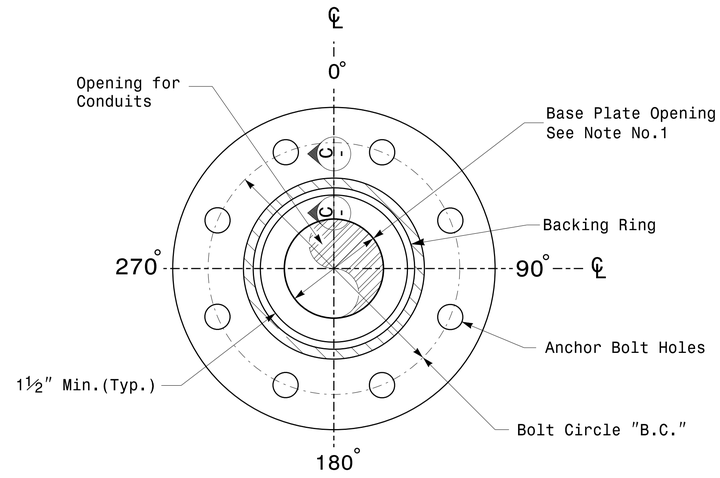

Section B-B

Pole Base Plate Details
(8 and 12 Bolt Pattern)

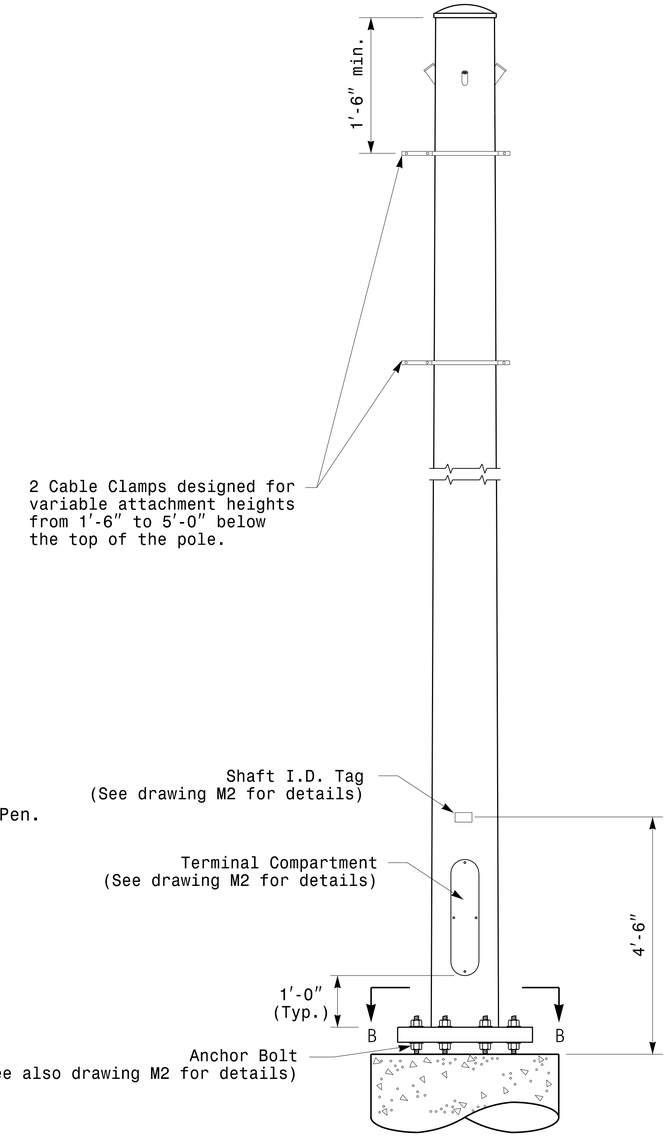

Monotube Strain Pole

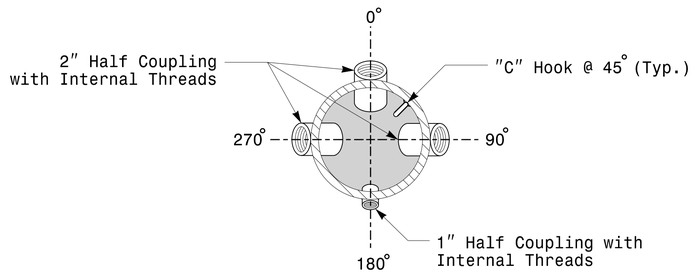

Section A-A

Radial Orientation for Factory Installed
Accessories at Top of Pole

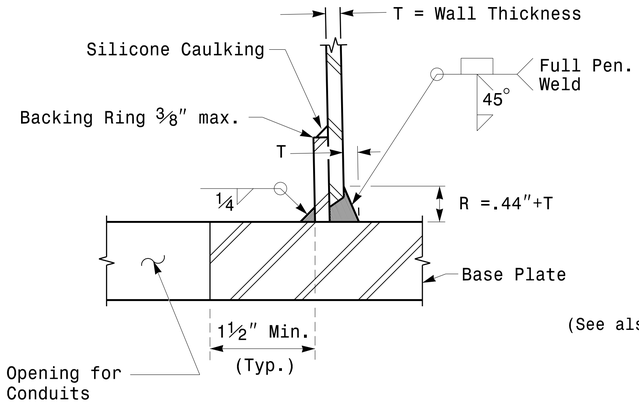

Section C-C
(Pole Attachment to Base Plate)

Full-Penetration
Groove Weld Detail

Prepared in the Offices of:
Transportation Mobility and Safety Division
Signal Design Section
750 N.Greenfield Pkwy,Garner,NC 27529

SCALE
0 NA
NONE

Typical Fabrication Details
For
Strain Poles

PLAN DATE:	OCTOBER 2017	DESIGNED BY:	K.C.DURIGON
PREPARED BY:	N. BITTING	REVIEWED BY:	D.C. SARKAR

REVISIONS	INIT.	DATE

SEAL
NORTH CAROLINA PROFESSIONAL SEAL 028094 ENGINEER DEBESH C. SARKAR

DocuSigned by:
Debesh C. Sarkar
4488823B1FE4C4
SIGNATURE

10/11/2017
DATE

11-OCT-2017 08:25
S:*ITS&SU*ITS Signals*Signal Design Section*Eastern Region*MM Sheets*2016*2014 Sig.M3 Std. Fabrication Details-Strain Poles.dgn
rnzinser

DocuSign Envelope ID: EC232C59-1224-4D0C-B3D3-A4E7F3BA38C6

PROJECT ID. NO.	SHEET NO.
U-5914	Sig.M4

Fabrication Details – Mast Arm Poles

Note:
1. Opening in pole base plate shall be equal to pole base inside diameter minus 3½" but shall not be less than 8½".

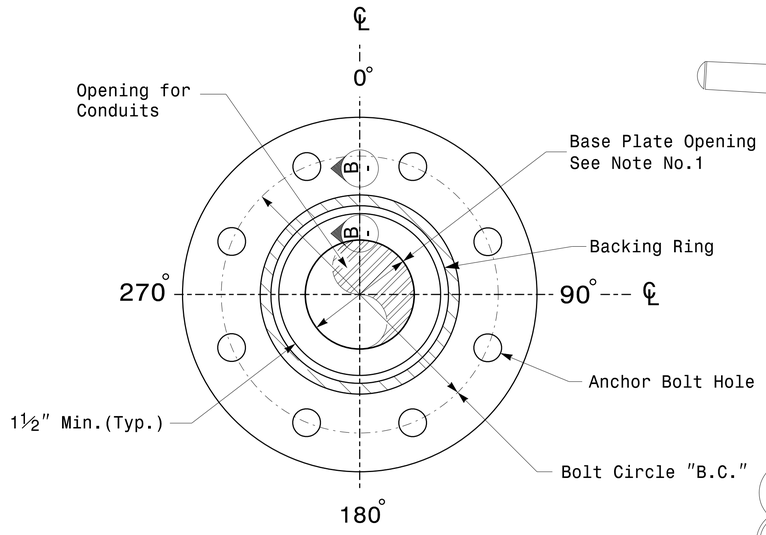

Section A-A

Pole Base Plate Details

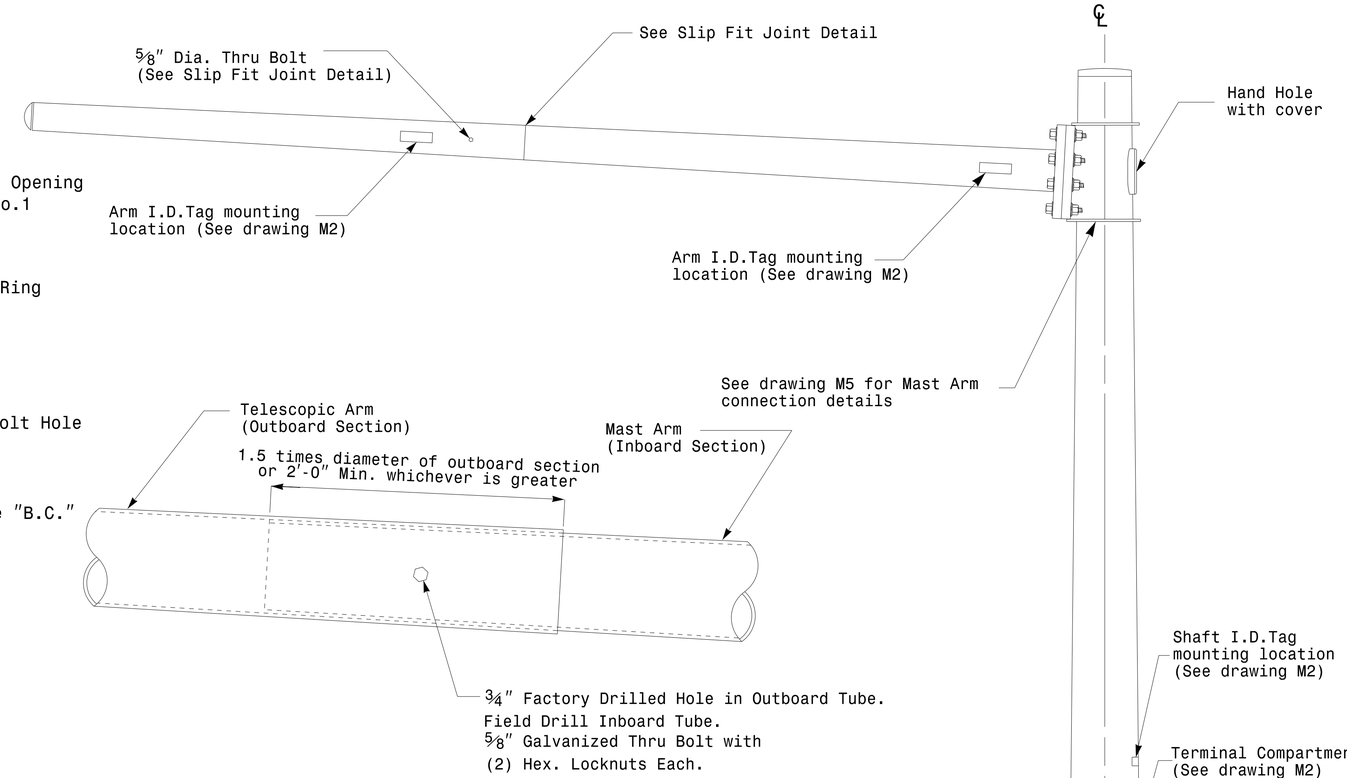

Slip Fit Joint Detail for Mast Arm

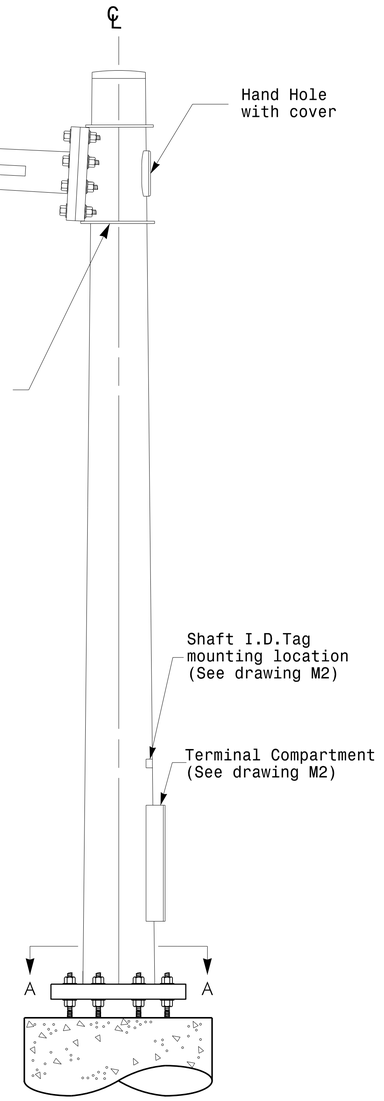

Mast Arm Pole

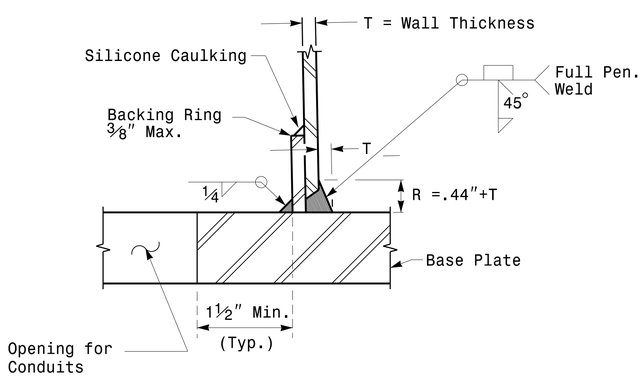

Section B-B

(Pole Attachment to Base Plate)

Full-Penetration Groove Weld Detail

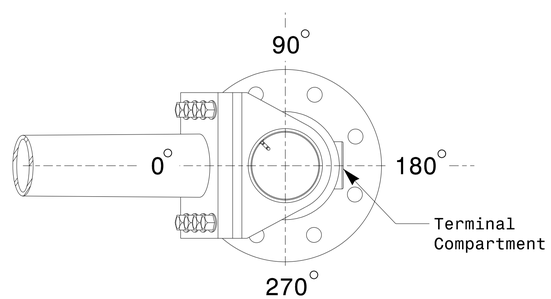

Mast Arm Radial Orientation

Prepared in the Offices of:
Transportation Mobility and Safety Division
Signal Design Section
750 N.Greenfield Pkwy.Garner,NC 27529

SCALE
0 NA
NONE

Typical Fabrication Details For Mast Arm Poles

PLAN DATE:	OCTOBER 2017	DESIGNED BY:	K.C.DURIGON
PREPARED BY:	N. BITTING	REVIEWED BY:	D.C. SARKAR

REVISIONS	INIT.	DATE

SEAL
NORTH CAROLINA PROFESSIONAL SEAL 028094 ENGINEER DEBESH C. SARKAR

DocuSigned by: Debesh C. Sarkar
SIGNATURE
10/11/2017
DATE

11-OCT-2017 08:33
S:\ITS&SU\ITS Signals\Signal Design Section\Eastern Region\M Sheets\2016\2014 Sig.M4 Std. Fabrication Details-Mast Arm Poles.dgn
rnzinser

DocuSign Envelope ID: EC232C59-1224-4D0C-B3D3-A4E7F3BA38C6

PROJECT ID. NO.	SHEET NO.
U-5914	Sig.M5

Welded Ring Stiffened Mast Arm Connection

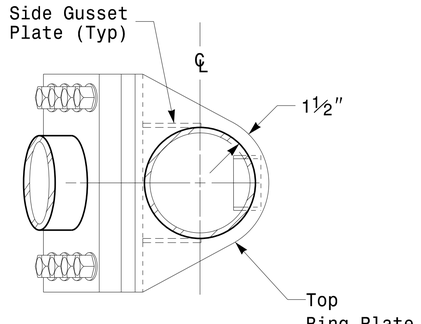

Plan View

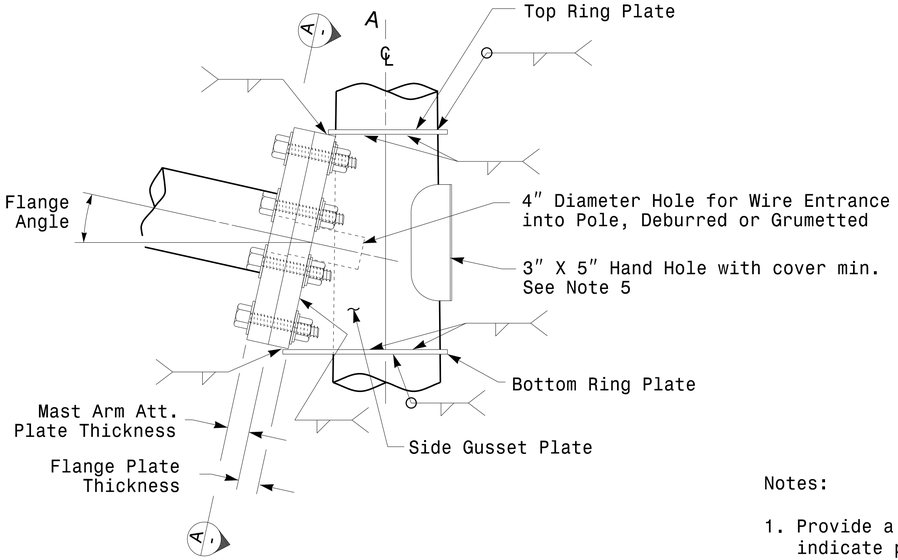

Side Elevation View

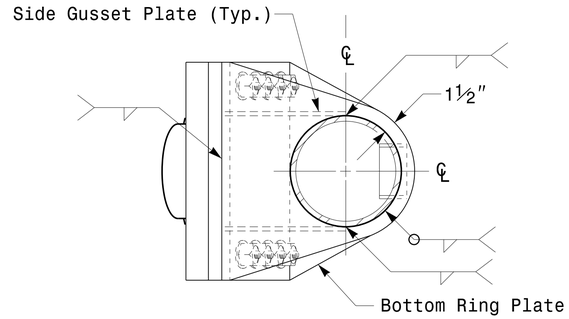

Bottom View

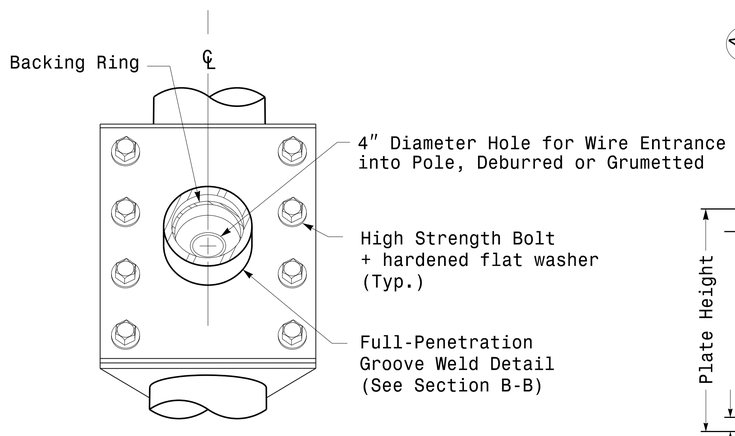

Front Elevation View

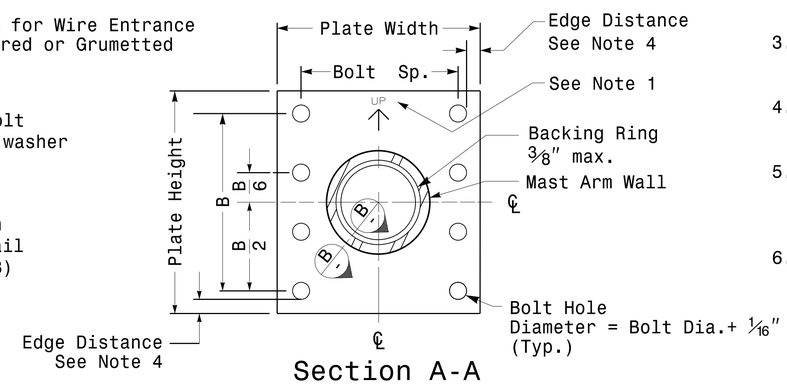

Section A-A
Mast Arm Attachment Plate

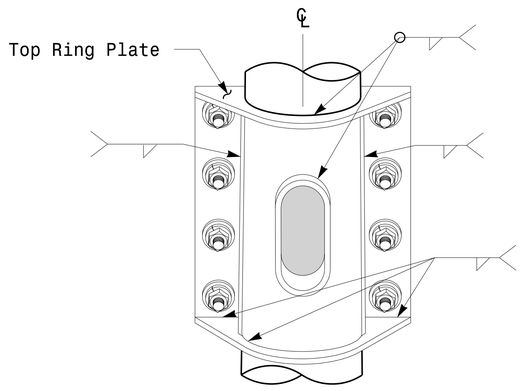

Back Elevation View

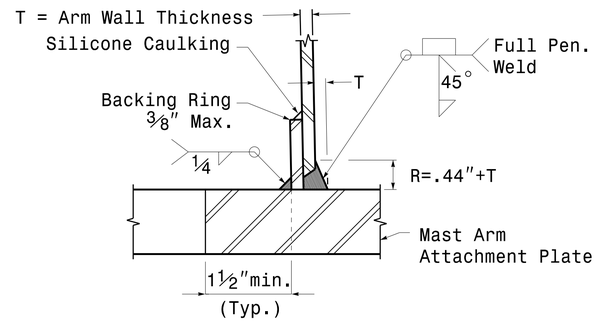

Section B-B
Full-Penetration Groove Weld Detail

Notes:

1. Provide a permanent means of identification above the mast arm to indicate proper attachment orientation of the mast arm.
2. Designer will determine the size of all structural components, plates, fasteners, and welds shown unless they are already specified.
3. Fabricator is responsible for providing appropriate holes at drainage points to drain galvanizing materials.
4. For minimum edge distance follow AISC Table J3.4 and J3.5. For nominal bolt hole size use Table J3.3.
5. Provide upper handhole as necessary when shaft extensions are reguired for luminaire arms or camera. For poles without luminaires/camera, wiring can be done through the top of pole.
6. Allowable range of flange tilt angle will vary from 0° to as required.

Fabrication Details – Mast Arm Connection

Prepared in the Offices of:
Transportation Mobility and Safety Division
Signal Design Section
750 N.Greenfield Pkwy,Garner,NC 27529

Typical Fabrication Details For Mast Arm Connection To Pole

PLAN DATE:	OCTOBER 2017	DESIGNED BY:	C.F.ANDREWS
PREPARED BY:	N. BITTING	REVIEWED BY:	D.C. SARKAR

REVISIONS	INIT.	DATE

SCALE 0 NA NONE

SEAL
NORTH CAROLINA PROFESSIONAL SEAL 028094 ENGINEER DEBESH C. SARKAR

DocuSigned by: Debesh C. Sarkar
SIGNATURE
10/11/2017
DATE

11-OCT-2017 08:35
S:\ITS&SU\ITS Signals\Signal Design Section\Eastern Region\M Sheets\2016\2014 Sig.M5 Std. Connection Fabrication Details-Mast Arm Poles.dgn
rnzinser

DocuSign Envelope ID: EC232C59-1224-4D0C-B3D3-A4E7F3BA38C6

PROJECT ID. NO.	SHEET NO.
U-5914	Sig.M6

Fabrication Details – Strain Pole Attachments

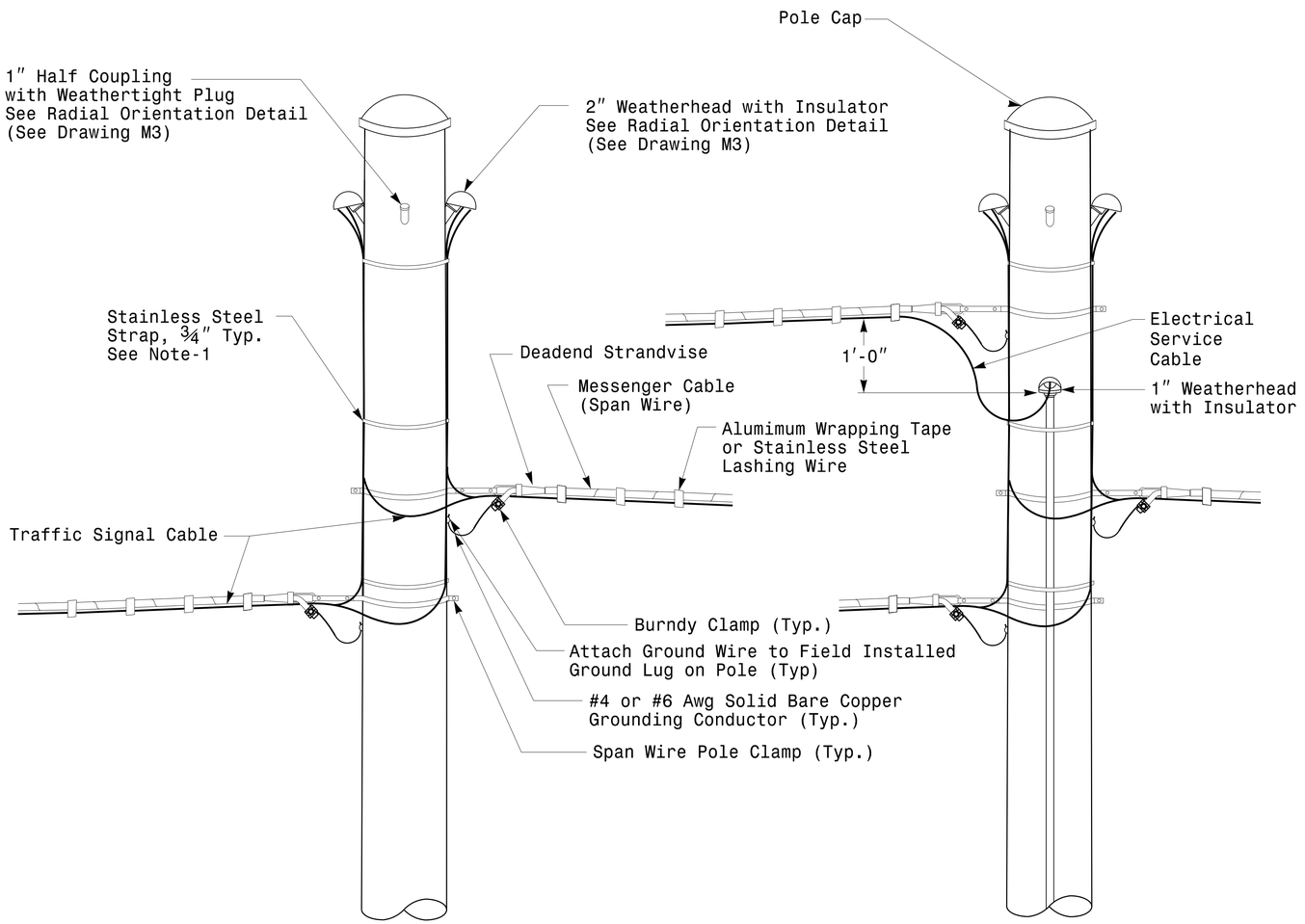

Strain Pole Attachments

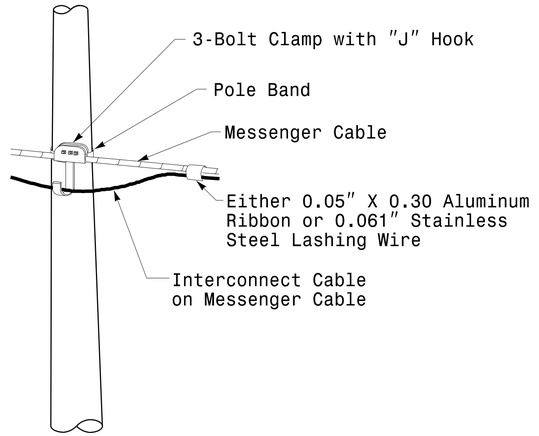

Attachment of Cable to Intermediate Metal Pole

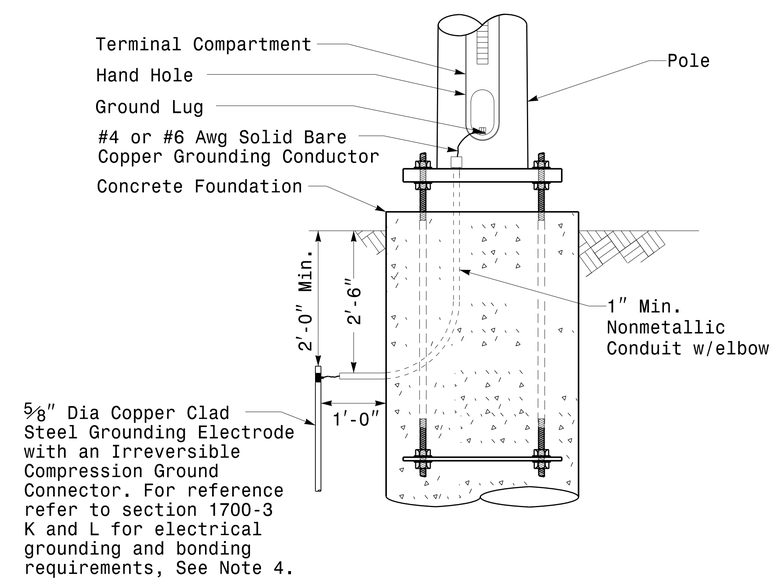

Metal Pole Grounding Detail For Strain Pole and Mast Arm

NOTE:

1. Strap all signal cables to the side of the pole with ¾" stainless steel straps when the distance between the spanwire attachment clamp and the weatherheads exceeds 3'-0".
2. Provide minimum two spanwire pole clamps per pole.
3. It is prohibited to attach two span wires at one pole clamp.
4. For general requirements refer to NCDOT Standard Specifications for Roadway and Structures, January 2018.

Prepared in the Offices of:
Transportation Mobility and Safety Division
Signal Design Section
750 N.Greenfield Pkwy.Garner.NC 27529

SCALE
0 NA
NONE

Typical Fabrication Details For Strain Pole Attachments

PLAN DATE:	OCTOBER 2017	DESIGNED BY:	C.F.ANDREWS
PREPARED BY:	N. BITTING	REVIEWED BY:	D.C. SARKAR

REVISIONS	INIT.	DATE

SEAL
NORTH CAROLINA PROFESSIONAL SEAL 028094 ENGINEER DEBESH C. SARKAR

DocuSigned by: Debesh C. Sarkar
SIGNATURE
10/11/2017
DATE

11-OCT-2017 08:36
S:\ITS&SU\ITS Signals\Signal Design Section\Eastern Region\MM Sheets\2016\2014 Sig.M6 Std. Fabrication Details-Strain Poles.dgn
rnzinser

DocuSign Envelope ID: EC232C59-1224-4D0C-B3D3-A4E7F3BA38C6

PROJECT ID. NO.	SHEET NO.
U-5914	Sig.M7

Construction Details – Foundations

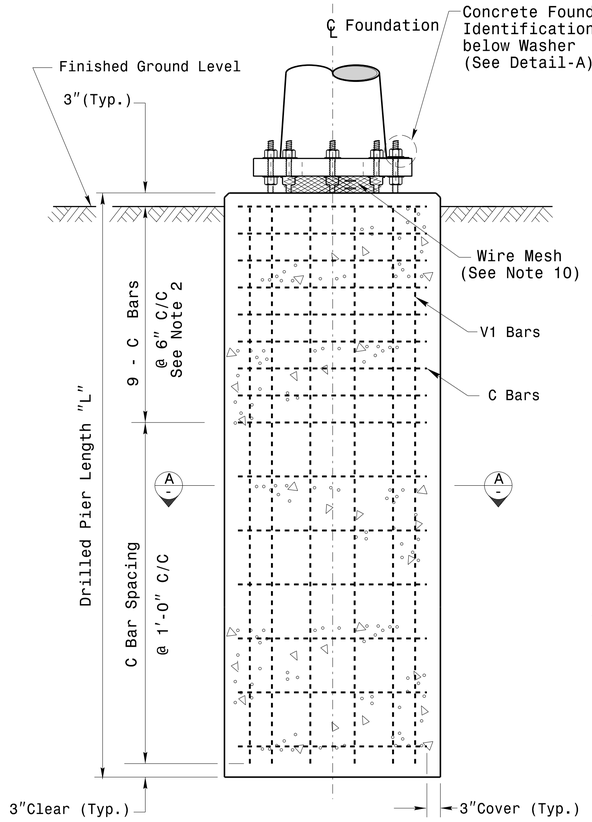

Concrete Shaft Elevation

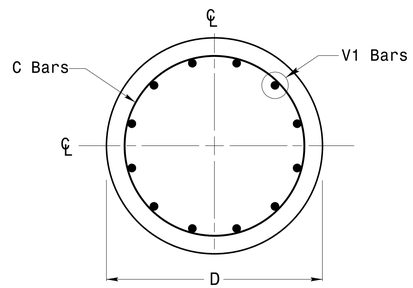

Section A-A

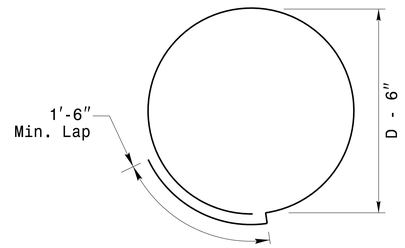

Typical "C" Bar Detail

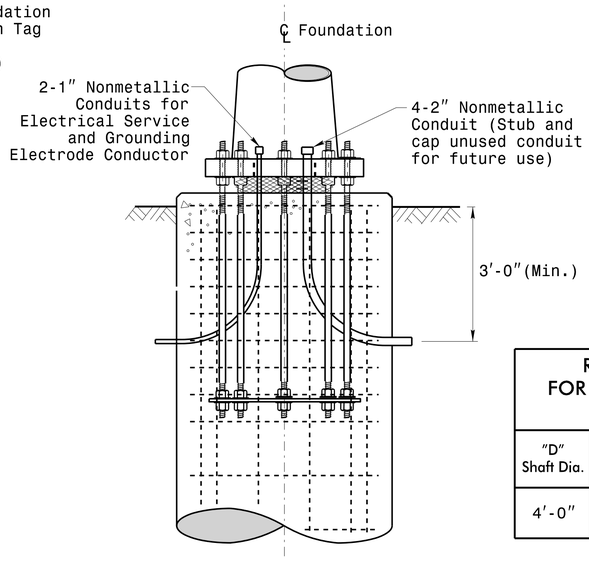

Typical Foundation Conduit Details

REINFORCING STEEL TABLE FOR STANDARD DRILL PIER SHAFT (4′–0″ DIAMETER)						
"D" Shaft Dia.	Conc. Volume (cu. yds.)	Bar Name	MIN.	Size	Type	Length
4′-0″	.465 x L	V1	—	#8	STR.	**
		C	*	#4	CIR.	12′-6″

* See Note No. 2
** See Note No. 3

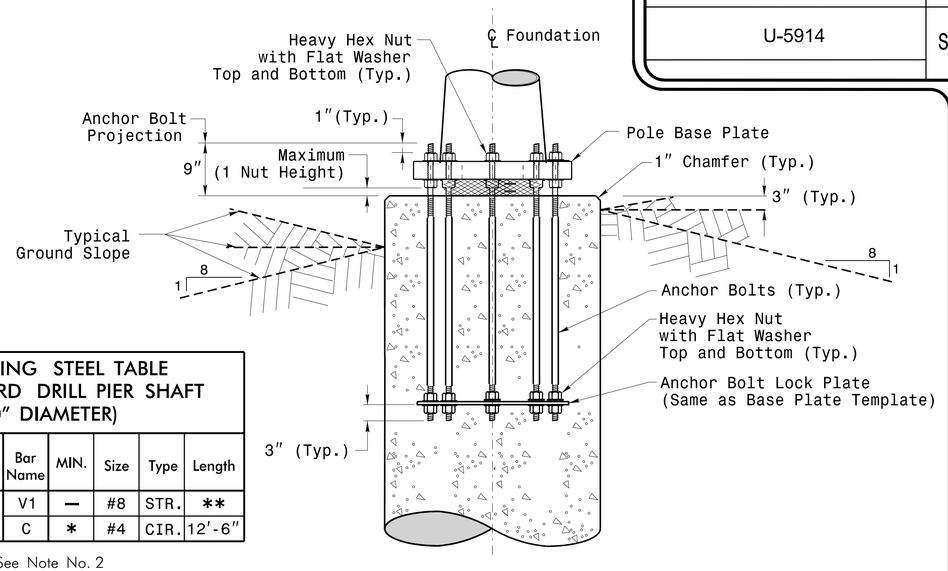

Typical Foundation Anchor Bolt Details

(Reinforcing Cage Not Shown for Clarity)

General Notes:

1. If actual subsurface conditions differ significantly from boring data contact the Engineer before excavating or placing concrete.
2. Circular tie reinforcing rings may be vertically adjusted by +/-3″ at a depth between 2′-0″ and 3′-0″ to facilitate the installation of electrical conduit entering in the cage.
3. For standard foundations, see sheet Sig. M8 for details. Vertical reinforcing bars (V1) may be horizontally adjusted by +/-3″ to facilitate the installation of electrical conduit entering into the cage.
4. Provide 2″ to 5″ foundation projection above ground level depending on the ground slope.
5. Unless otherwise shown, foundation designs are based on non-sloping level ground surfaces with slope ratios of 8:1 (H:V) or flatter. If actual ground line slopes are steeper contact the Engineer before excavating or placing concrete.
6. Construct foundations in accordance with NCDOT Standard Provisions SP09 R005- Foundations and Anchor Rod Assemblies for Metal Poles. All applicable 2018 NCDOT Standard Specifications are referenced in this provision. Refer to the NCDOT Resources/Specifications page located on the Connect NCDOT website.

   https://connect.ncdot.gov/resources/Specifications and Special Provisions.aspx
7. Use air entrained AA concrete mix with a compression strength of f′c=4500 psi.(min.) after 28 days.
8. Use ASTM A615 grade 60 deformed bars for all reinforcing steel. Maintain at least 3″ cover on all reinforcement.
9. Locate the Identification Tag on the top of the base plate, directly above the conduit's entry point.
10. Provide two layers of galvanized welded 23 gauge (0.25) 6″ wide 4 mesh wire around pipes under the base plate and secure it with ties if necessary.
11. Preferred location for the I.D. Tag is as shown in Detail-A; directly above the conduit entering the foundation.

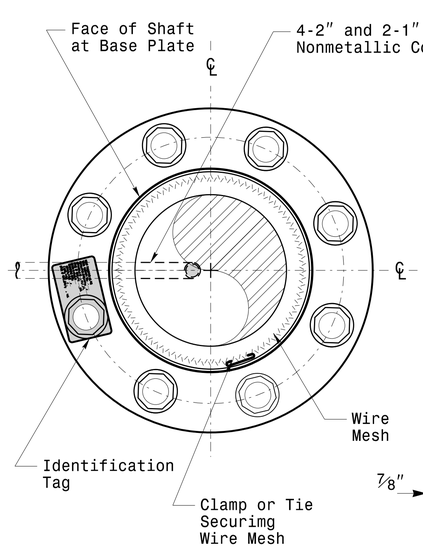

D = Diameter
L = Length/Depth
mm = Month
yy = Year

Detail-A

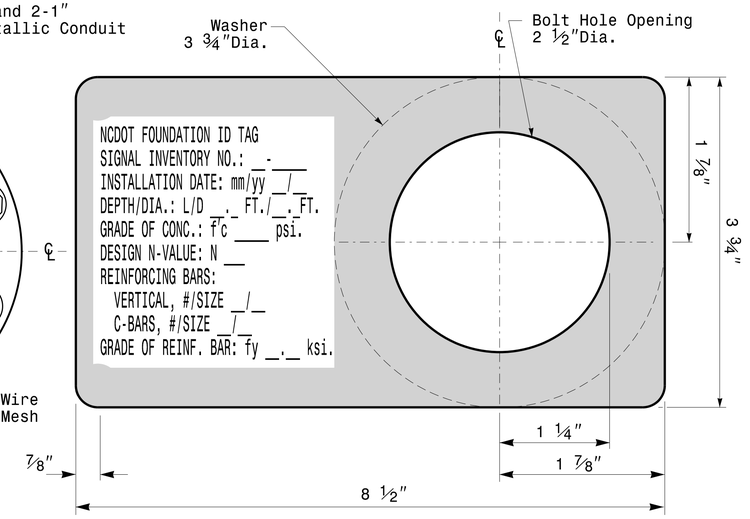

Concrete Foundation Identification Tag Details

Prepared in the Offices of:
Transportation Mobility and Safety Division
Traffic Engineering Branch
Signal Design Section
750 N.Greenfield Pkwy.Garner,NC 27529

Construction Details For Foundations

PLAN DATE:	OCTOBER 2018	DESIGNED BY:	C.B.COGDELL
PREPARED BY:	N. BITTING	REVIEWED BY:	D.C. SARKAR

SCALE 0 NA NONE

REV. NO.	COMMENTS	INIT.	DATE
1	Revised Foundation Tag Details	N.B.	5/11/2015

SEAL
NORTH CAROLINA PROFESSIONAL SEAL 028094 ENGINEER DEBESH C. SARKAR

DocuSigned by: Debesh C. Sarkar 44E8E32B14784C4...URE

10/11/2017 DATE

11-OCT-2017 08:37
S:\ITS&SU\ITS Signals\Signal Design Section\Eastern Region\MW Sheets\2016\2014 Sig_M7 Std. Construction Details-Strain Poles.dgn
rsatheer

DocuSign Envelope ID: EC232C59-1224-4D0C-B3D3-A4E7F3BA38C6

SOIL CONDITION

PROJECT ID. NO.	SHEET NO.
U-5914	Sig.M8

		STANDARD STRAIN POLES						STANDARD FOUNDATIONS 48″ Diameter Drilled Pier Length (L) – Feet							Reinforcement			
								Clay				Sand			Longitudinal		Stirrups	
		Case No.	Pole Height (Ft.)	Base Plate BC (In.)	Reactions at the Pole Base Axial (kip)	Shear (kip)	Moment (ft-kip)	Medium N-Value 4–8	Stiff N-Value 9–15	Very Stiff N-Value 16–30	Hard N-Value >30	Loose N-Value 4–10	Medium N-Value 11–30	Dense N-Value >30	Bar Size (#)	Quantity (ea.)	Bar Size (#)	Spacing (in.)
WIND ZONE 1	LIGHT	S26L3	26	25	2	11	270	19	13	10	8	17	14.5	12.5	8	12	4	12
		S30L3	30	25	2	11	300	19.5	13.5	10	8	17.5	15	13	8	14	4	12
		S35L3	35	25	3	11	320	20	13.5	10.5	8	17.5	15	13	8	14	4	12
	HEAVY	S30H3	30	29	3	16	450	24.5	16	12	9	21	17.5	15	8	16	4	6
		S35H3	35	29	4	16	515	26	17	12.5	9.5	22	18.5	16	8	16	4	6
WIND ZONE 2	LIGHT	S26L2	26	23	2	10	245	18	12.5	9.5	8	16.5	14	12	8	12	4	12
		S30L2	30	23	2	10	270	18.5	12.5	10	8	16.5	14	12.5	8	12	4	12
		S35L2	35	23	3	10	300	19.5	13	10	8	17	14.5	13	8	12	4	12
	HEAVY	S30H2	30	29	3	15	415	23	15.5	11.5	9	20	17	14.5	8	16	4	6
		S35H2	35	29	4	15	475	25	16.5	12	9.5	21	17.5	15.5	8	16	4	6
WIND ZONE 3	LIGHT	S26L2	26	23	2	10	245	18	12.5	9.5	8	16.5	14	12	8	12	4	12
		S30L2	30	23	2	10	270	18.5	12.5	10	8	16.5	14	12.5	8	12	4	12
		S35L2	35	23	3	10	300	19.5	13	10	8	17	14.5	13	8	12	4	12
	HEAVY	S30H2	30	29	3	15	415	23	15.5	11.5	9	20	17	14.5	8	16	4	6
		S35H2	35	29	4	15	475	25	16.5	12	9.5	21	17.5	15.5	8	16	4	6
WIND ZONE 4	LIGHT	S26L1	26	22	2	8	190	16	11.5	8.5	8	15	12.5	11	8	12	4	12
		S30L1	30	22	2	8	205	16.5	11.5	9	8	15	13	11.5	8	12	4	12
		S35L1	35	22	3	8	230	17	12	9	8	15.5	13.5	11.5	8	12	4	12
	HEAVY	S30H1	30	25	3	12	320	20.5	13.5	10.5	8	18	15	13.5	8	16	4	6
		S35H1	35	25	4	12	350	21	14	10.5	8.5	18.5	15.5	13.5	8	16	4	6
WIND ZONE 5	LIGHT	S26L2	26	23	2	10	245	18	12.5	9.5	8	16.5	14	12	8	12	4	12
		S30L2	30	23	2	10	270	18.5	12.5	10	8	16.5	14	12.5	8	12	4	12
		S35L2	35	23	3	10	300	19.5	13	10	8	17	14.5	13	8	12	4	12
	HEAVY	S30H2	30	29	3	15	415	23	15.5	11.5	9	20	17	14.5	8	16	4	6
		S35H2	35	29	4	15	475	25	16.5	12	9.5	21	17.5	15.5	8	16	4	6

48″ Dia. Foundations Concrete Volume (cubic yards) = (0.465) x Drilled Pier Length

General Notes:

1. Values shown in the "Reactions at the Pole Base" column represent the minimum acceptable capacity allowed for design using a design CSR of 1.00.
2. Use chairs and spacers to maintain proper clearance.
3. For foundation, always use air-entrain concrete mix.

Foundation Selection:

1. Perform a standard penetration test at each proposed foundation site to determine "N" value.
2. Select the appropriate wind zone from M 1 drawing.
3. Select the soil type (Clay or Sand) that best describes the soil characteristics.
4. Get the appropriate standard pole case number from the plans or from the Engineer.
5. Select the appropriate column under "Standard Foundations" based on soil type and "N" value. Select the appropriate row based on the pole load case.
6. The foundation depth is the value shown in the "Standard Foundations" category where the column and the row intersect.
7. Use Construction Procedures and Design Methods prescribed by FHWA-NHI-10-016 for Reference Drilled Shafts.

Prepared in the Offices of:
Transportation Mobility and Safety Division
Signal Design Section
750 N.Greenfield Pkwy.,Garner,NC 27529

Standard Strain Pole Foundation for All Soil Conditions

PLAN DATE:	OCTOBER 2017	DESIGNED BY:	C.B. COGDELL
PREPARED BY:	N. BITTING	REVIEWED BY:	D.C. SARKAR

REVISIONS	INIT.	DATE
Changed "Foundation Depth" to "Drilled Pier Length"in Conc. Eqn.	N.B.	7/12/2015

SCALE: 0 NA — NONE

SEAL
NORTH CAROLINA PROFESSIONAL SEAL 028094 ENGINEER DEBESH C. SARKAR

Docusigned by: Debesh C. Sarkar
10/11/2017
DATE

11-OCT-2017 08:40
S:\TS&SU\TS Signals\Signal Design Section\Eastern Region\MW Sheets\2016\2014 Sig.M8 Std. Strain Pole Found.-Saturated Soil Condition.dgn
rtaylor

DocuSign Envelope ID: 6C477B03-2299-4AF8-9636-04545DA0F415

TIP PROJECT: U-5914

T.I.P. NO.	SHEET NO.
U-5914	UC-1

STATE OF NORTH CAROLINA
DIVISION OF HIGHWAYS

UTILITY CONSTRUCTION PLANS
BRUNSWICK COUNTY

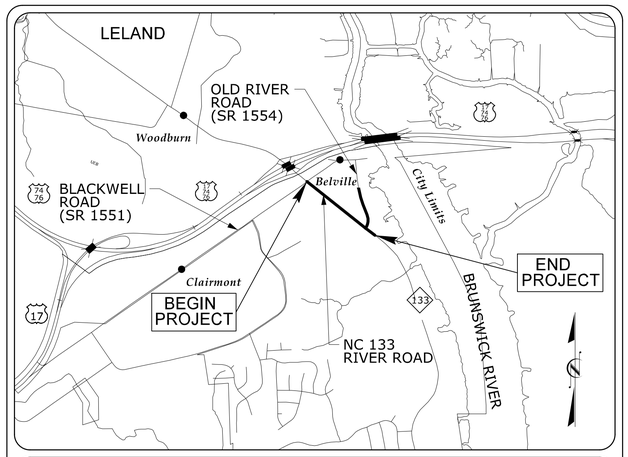

VICINITY MAP
NOT TO SCALE



LOCATION: NC 133 FROM SR 1551 (BLACKWELL ROAD) TO SR 1554 (OLD RIVER ROAD)

TYPE OF WORK: WATER AND SEWER RELOCATIONS

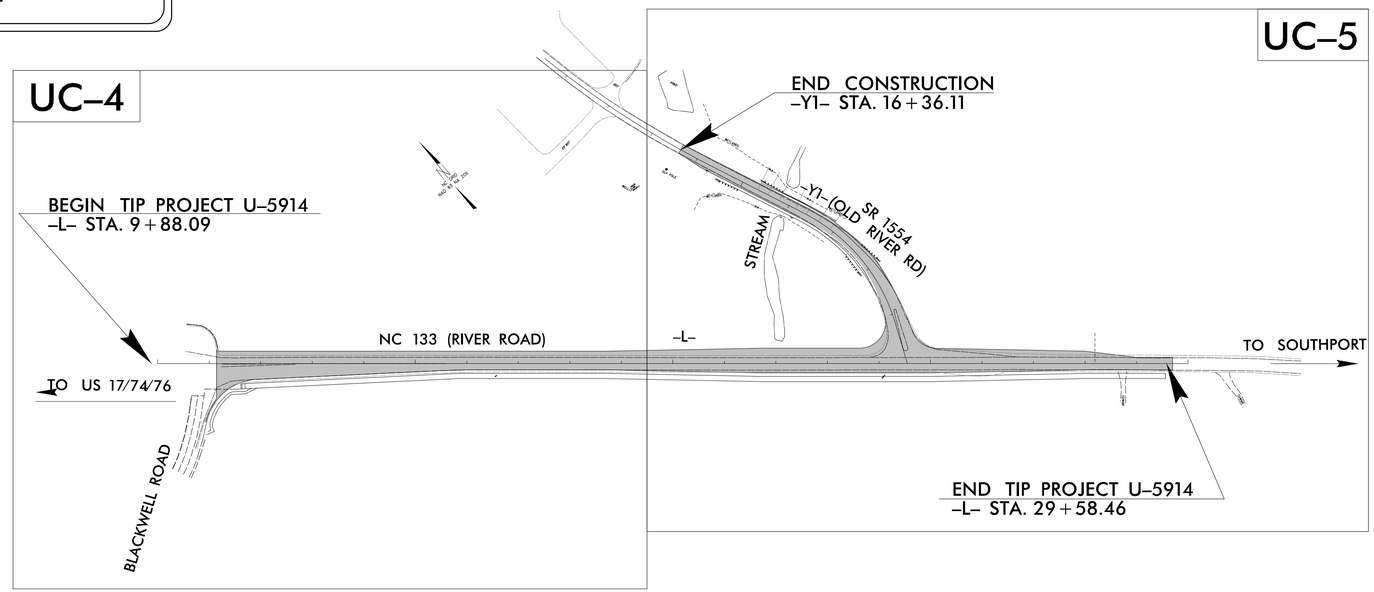

RIGHT OF WAY DATE:
JANUARY 10, 2022

LETTING DATE:
APRIL 20, 2023

DOCUMENT NOT CONSIDERED FINAL UNLESS ALL SIGNATURES COMPLETED

GRAPHIC SCALES

PLANS: 50 25 0 50 100
PROFILE (HORIZONTAL): 50 25 0 50 100
PROFILE (VERTICAL): 10 5 0 10 20

INDEX OF SHEETS

SHEET NO.:	DESCRIPTION:
UC-1	TITLE SHEET
UC-2	UTILITY SYMBOLOGY
UC-3	NOTES
UC-3A THRU UC-3C	DETAILS
UC-4 THRU UC-5	UTILITY CONSTRUCTION SHEETS
UC-6	PROFILE SHEET

WATER AND SEWER OWNERS ON PROJECT

(A) WATER: H2GO
(B) SANITARY SEWER: H2GO
(C)
(D)
(E)

PREPARED IN THE OFFICE OF:
AECOM
AECOM TECHNICAL SERVICES OF NORTH CAROLINA, INC.
5438 WADE PARK BLVD, SUITE 200, RALEIGH, NC 27607
919-461-1100
F - 0342

Steve Scruggs, PE — UTILITY PROJECT MANAGER
Gary Swinson — PROJECT UTILITY DESIGNER

SEAL
3/10/2023
NORTH CAROLINA PROFESSIONAL SEAL 10666 ENGINEER D. STEPHEN SCRUGGS
Docusigned by: D. Stephen Scruggs 957A10CE3D5E477...

DIVISION OF HIGHWAYS
DIVISION 3
5501 BARBADOS BLVD.
CASTLE HAYNE, NC 28429
PHONE: (910) 341-2000
FAX: (910) 675-0143

D. Chad Kimes, PE — DIVISION ENGINEER
Eric C. Murray — DIVISION PROJECT ENGINEER
Lonny A. Sleeper — DIVISION UTILITIES ENGINEER
Chris Sutton — DIVISION UTILITIES COORDINATOR

1:01:16 PM
C:\pwworking\usnc\dms02426\U5914_uc_tsh.dgn
Swinsong

PROJECT REFERENCE NO.	SHEET NO.
U-5914	UC-2

PROPOSED WATER SYMBOLS

- Water Line (Sized as Shown) — 12" WL
- 11¼ Degree Bend
- 22½ Degree Bend
- 45 Degree Bend
- 90 Degree Bend
- Plug
- Tee
- Cross
- Reducer
- Gate Valve — GV
- Butterfly Valve — BV
- Tapping Valve — TGV
- Line Stop — LS
- Line Stop with Bypass — LS/BP
- Blow Off — BO
- Fire Hydrant — PFH
- Relocate Fire Hydrant — RFH
- Remove Fire Hydrant — REM FH
- Water Meter — PWM
- Relocate Water Meter — RWM
- Remove Water Meter — REM WM
- Water Pump Station — PS(W)
- RPZ Backflow Preventer — PRPZ
- DCV Backflow Preventer — PBFP
- Relocate RPZ Backflow Preventer — RRPZ
- Relocate DCV Backflow Preventer — RBFP

PROPOSED SEWER SYMBOLS

- Gravity Sewer Line (Sized as Shown) — 12" SS
- Force Main Sewer Line (Sized as Shown) — 12" FSS
- Manhole (Sized per Note)
- Sewer Pump Station — PS(SS)

PROPOSED MISCELLANOUS UTILITIES SYMBOLS

- Power Pole
- Telephone Pole
- Joint Use Pole
- Telephone Pedestal — TEL_PED
- Utility Line by Others (Type as Shown)
- Trenchless Installation — 12" TL INSTALL
- Encasement by Open Cut — 24" ENCAS BY OC
- Encasement — 24" ENCASEMENT
- Thrust Block
- Air Release Valve — AR
- Utility Vault — UV
- Concrete Pier — CP
- Steel Pier — SP
- Plan Note — NOTE
- Pay Item Note — PAY ITEM

EXISTING UTILITIES SYMBOLS

- Power Pole
- Telephone Pole
- Joint Use Pole
- Utility Pole
- Utility Pole with Base
- H-Frame Pole
- Power Transmission Line Tower
- Water Manhole
- Power Manhole
- Telephone Manhole
- Sanitary Sewer Manhole
- Hand Hole for Cable
- Power Transformer
- Telephone Pedestal
- CATV Pedestal
- Gas Valve
- Gas Meter
- Located Miscellaneous Utility Object
- Abandoned According to Utility Records
- End of Information
- *Underground Power Line
- *Underground Telephone Cable
- *Underground Telephone Conduit
- *Underground Fiber Optics Telephone Cable
- *Underground TV Cable
- *Underground Fiber Optics TV Cable
- *Underground Gas Pipeline
- Aboveground Gas Pipeline
- *Underground Water Line
- Aboveground Water Line
- *Underground Gravity Sanitary Sewer Line
- Aboveground Gravity Sanitary Sewer Line
- *Underground SS Forced Main Line
- Underground Unknown Utility Line
- SUE Test Hole
- Water Meter
- Water Valve
- Fire Hydrant
- Sanitary Sewer Cleanout

*For Existing Utilities

- Utility Line Drawn from Record (Type as Shown)
- Designated Utility Line (Type as Shown)

REV: 2/1/2012

c:\pwworkingdir\cadd\dms02426\U5914_uc_psh02.dgn
14:45:09 PM
Shaun.Overton

DocuSign Envelope ID: 9812DDB6-5162-4297-ADE4-6CFDF5B69368

UTILITY CONSTRUCTION

GENERAL NOTES:

1. THE PROPOSED UTILITY CONSTRUCTION SHALL MEET THE APPLICABLE REQUIREMENTS OF THE NC DEPARTMENT OF TRANSPORTATION'S "STANDARD SPECIFICATIONS FOR ROADS AND STRUCTURES" DATED JANUARY 2018.

2. THE EXISTING WATER AND SEWER UTILITIES BELONG TO BRUNSWICK REGIONAL WATER & SEWER H2GO. THE EXISTING 2" FORCE MAIN BELONGS TO NCDOT.

3. ALL WATER LINES TO BE INSTALLED WITHIN COMPLIANCE OF THE RULES AND REGULATIONS OF THE NORTH CAROLINA DEPARTMENT OF ENVIRONMENTAL QUALITY, DIVISION OF WATER RESOURCES, PUBLIC WATER SUPPLY SECTION. ALL SEWER LINES TO BE INSTALLED WITHIN COMPLIANCE OF THE RULES AND REGULATIONS OF THE NORTH CAROLINA DEPARTMENT OF ENVIRONMENT QUALITY, DIVISION OF WATER RESOURCES, WATER QUALITY SECTION. PERFORM ALL WORK IN ACCORDANCE WITH THE APPLICABLE PLUMBING CODES.

4. THE UTILITY OWNER OWNS THE EXISTING UTILITY FACILITIES AND WILL OWN THE NEW UTILITY FACILITIES AFTER ACCEPTANCE BY THE DEPARTMENT. THE DEPARTMENT OWNS THE CONSTRUCTION CONTRACT AND HAS ADMINISTRATIVE AUTHORITY. COMMUNICATIONS AND DECISIONS BETWEEN THE CONTRACTOR AND UTILITY OWNER ARE NOT BINDING UPON THE DEPARTMENT OR THIS CONTRACT UNLESS AUTHORIZED BY THE ENGINEER. AGREEMENTS BETWEEN THE UTILITY OWNER AND CONTRACTOR FOR THE WORK THAT IS NOT PART OF THIS CONTRACT OR IS SECONDARY TO THIS CONTRACT ARE ALLOWED, BUT ARE NOT BINDING UPON THE DEPARTMENT.

5. PROVIDE ACCESS FOR THE DEPARTMENT PERSONNEL AND THE OWNER'S REPRESENTATIVES TO ALL PHASES OF CONSTRUCTION. NOTIFY DEPARTMENT PERSONNEL AND THE UTILITY OWNER TWO WEEKS PRIOR TO COMMENCEMENT OF ANY WORK AND ONE WEEK PRIOR TO SERVICE INTERRUPTION. KEEP UTILITY OWNERS' REPRESENTATIVES INFORMED OF WORK PROGRESS AND PROVIDE OPPORTUNITY FOR INSPECTION OF CONSTRUCTION AND TESTING.

6. THE PLANS DEPICT THE BEST AVAILABLE INFORMATION FOR THE LOCATION, SIZE, AND TYPE OF MATERIAL FOR ALL EXISTING UTILITIES. MAKE INVESTIGATIONS FOR DETERMINING THE EXACT LOCATION, SIZE, AND TYPE MATERIAL OF THE EXISTING FACILITIES AS NECESSARY FOR THE CONSTRUCTION OF THE PROPOSED UTILITIES AND FOR AVOIDING DAMAGE TO EXISTING FACILITIES. REPAIR ANY DAMAGE INCURRED TO EXISTING FACILITIES TO THE ORIGINAL OR BETTER CONDITION AT NO ADDITIONAL COST TO THE DEPARTMENT.

7. MAKE FINAL CONNECTIONS OF THE NEW WORK TO THE EXISTING SYSTEM WHERE INDICATED ON THE PLANS, AS REQUIRED TO FIT THE ACTUAL CONDITIONS, OR AS DIRECTED.

8. MAKE CONNECTIONS BETWEEN EXISTING AND PROPOSED UTILITIES AT TIMES MOST CONVENIENT TO THE PUBLIC, WITHOUT ENDANGERING THE UTILITY SERVICE, AND IN ACCORDANCE WITH THE UTILITY OWNER'S REQUIREMENTS. MAKE CONNECTIONS ON WEEKENDS, AT NIGHT, AND ON HOLIDAYS IF NECESSARY.

9. ALL UTILITY MATERIALS SHALL BE APPROVED PRIOR TO DELIVERY TO THE PROJECT. SEE 1500-7, " SUBMITTALS AND RECORDS" IN SECTION 1500 OF THE STANDARD SPECIFICATIONS.

PROJECT SPECIFIC NOTES:

1. INSTALL, TEST AND DISINFECT THE NEW WATER MAINS PRIOR TO MAKING THE CONNECTIONS TO THE EXISTING WATER MAINS. PROVIDE H2GO 72 HOURS NOTICE PRIOR BY CALLING THE OPERATIONS AND MAINTENANCE OFFICE AT 910-371-9949 TO MAKE THE CONNECTIONS. THE CONNECTIONS SHALL BE MADE AND WATER MAIN PLACED INTO SERVICE WITHIN AN (8) HOUR PERIOD. H2GO WILL PROVIDE PERSONNEL TO WITNESS THE FLUSHING, PRESSURE TESTING, CHLORINATION AND SAMPLING OF THE NEW WATER MAIN.

PROJECT REFERENCE NO.	SHEET NO.
U-5914	UC-3
DESIGNED BY:	1/17/2023
DRAWN BY:	
CHECKED BY:	
APPROVED BY:	
REVISED:	
NORTH CAROLINA DEPARTMENT OF TRANSPORTATION	NORTH CAROLINA PROFESSIONAL SEAL 10666 ENGINEER D. STEPHEN SCRUGGS
UTILITIES ENGINEERING SEC. PHONE:(919)707-6690 FAX:(919)250-4151	DocuSigned by: D. Stephen Scruggs 957A10CE5DDE477...

UTILITY CONSTRUCTION

DOCUMENT NOT CONSIDERED FINAL UNLESS ALL SIGNATURES COMPLETED

Prepared in the Office of:

AECOM

AECOM TECHNICAL SERVICES OF NORTH CAROLINA, INC.
5438 WADE PARK BLVD, SUITE 200, RALEIGH, NC 27607
919-461-1100
F - 0342

DATE: 1/6/2023
TIME: 4:52:20 PM
DGN: c:\projects\ncdot\projects\2426\d\569\uc_uc03.dgn

DocuSign Envelope ID: 9812DDB6-5162-4297-ADE4-6CFDF5B69368

PROJECT REFERENCE NO.	SHEET NO.
U-5914	UC-3A
DESIGNED BY:	1/17/2023
DRAWN BY:	
CHECKED BY:	
APPROVED BY:	
REVISED:	
NORTH CAROLINA DEPARTMENT OF TRANSPORTATION	
UTILITIES ENGINEERING SEC. PHONE:(919)707-6690 FAX:(919)250-4151	

NORTH CAROLINA PROFESSIONAL SEAL 10666 ENGINEER D. STEPHEN SCRUGGS

Docusigned by: D. Stephen Scruggs 807A10CB3C0B477...

UTILITY CONSTRUCTION

DOCUMENT NOT CONSIDERED FINAL UNLESS ALL SIGNATURES COMPLETED

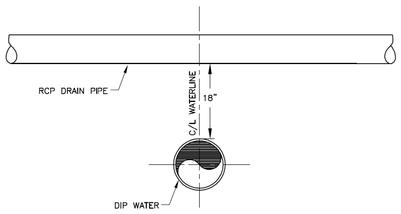

WATER & STORM DRAIN INTERSECTION

NTS SD 1-20

NORTH BRUNSWICK SANITARY DISTRICT	STANDARD DETAIL: SD 1-20 Not To Scale	DATE: 01/01/08 ...
P.O. BOX 2230 516 VILLAGE ROAD NE LELAND, N.C. 28451-2230 TEL (910) 371-9949 FAX (910) 371-6441	**WATER & STORM DRAIN INTERSECTION**	

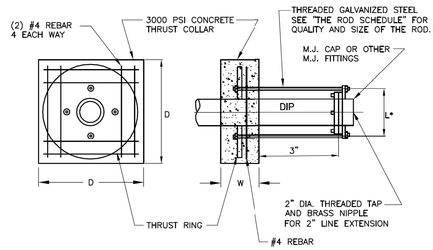

THRUST COLLAR SHALL BE FORMED USING ½" EXTERIOR PLYWOOD AS PER COLLAR DIMENSIONS SHOWN.

TIE ROD SCHEDULE

PIPE DIAM.	TIE ROD QUAN.	TIE ROD SIZE
4"	2	5/8"
6"	2	3/4"
8"	2	3/4"
12"	4	3/4"
16"	4	7/8"
20"	4	1"
24"	4	1 1/4"
30"	4	1 1/2"

COLLAR DIMENSIONS

LINE SIZE	MIN. W	MIN. D	PLATE DIAM.
4"	6"	L+8"	L+2"
6"	9"	L+9"	L+3"
8"	12"	L+9"	L+3"
12"	18"	L+9"	L+3"
16"	18"	L+9"	L+3"
20"	20"?	L+9"	L+3"
24"	24"?	L+10"	L+4"
30"	24"?	L+11"	L+5"

* CONTRACTOR VERIFY DISTANCE W/COLLAR SUPPLIERS.

THRUST COLLAR

NTS SD 1-22

NORTH BRUNSWICK SANITARY DISTRICT	STANDARD DETAIL: SD 1-22 Not To Scale	DATE: 01/01/08 ...
P.O. BOX 2230 516 VILLAGE ROAD NE LELAND, N.C. 28451-2230 TEL (910) 371-9949 FAX (910) 371-6441	**THRUST COLLAR**	

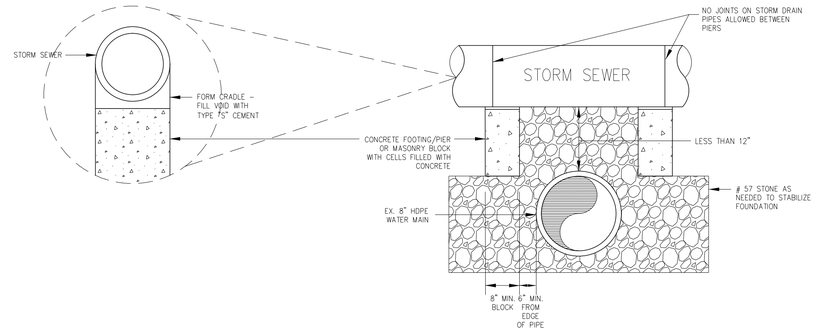

CONCRETE CRADLE FOR LESS THAN 12" VERTICAL CLEARANCE

SEE SHEET UC-4

TYPE "2"

(BEDDING FOR D.I. PIPE)

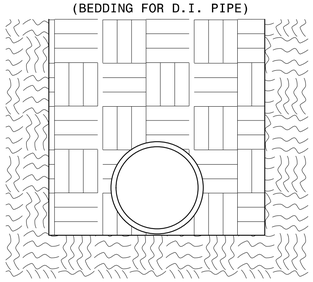

PIPE BEDDED IN FLAT-BOTTOM TRENCH. TRENCH BACKFILLED IN LOOSE 6" LAYERS COMPACTED TO TOP OF TRENCH USING LOCAL EXCAVATED MATERIAL, IF APPROVED BY THE ENGINEER, OR SELECT MATERIAL. ALL MATERIAL SHALL BE FREE OF ROCKS, FOREIGN MATERIAL, AND FROZEN EARTH. COMPACTION SHALL BE TO APPROX. 95% DENSITY IN ACCORDANCE WITH AASHTO T-99 AS MODIFIED BY THE DEPARTMENT OF TRANSPORTATION.

CLASS "C"

(BEDDING FOR P.V.C. PIPE)

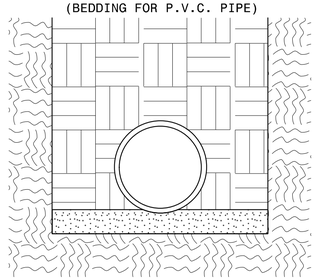

PIPE BEDDED IN LOOSE MATERIAL, LIGHTLY TAMPED WITH A MINIMUM OF 6" UNDER PIPE. TRENCH BACKFILLED IN LOOSE 6" LAYERS COMPACTED TO TOP OF TRENCH USING LOCAL EXCAVATED MATERIAL, IF APPROVED BY THE ENGINEER, OR SELECT MATERIAL. ALL MATERIAL SHALL BE FREE OF ROCKS, FOREIGN MATERIAL, AND FROZEN EARTH. COMPACTION SHALL BE TO APPROX. 95% DENSITY IN ACCORDANCE WITH AASHTO T-99 AS MODIFIED BY THE DEPARTMENT OF TRANSPORTATION.

MAXIMUM TRENCH WIDTH AT TOP OF PIPE

NOMINAL PIPE SIZE (INCHES)	TRENCH WIDTH (INCHES)	NOMINAL PIPE SIZE (INCHES)	TRENCH WIDTH (INCHES)
4	28	20	44
6	30	24	48
8	32	30	54
10	34	36	60
12	36	42	66
14	38	48	72
16	40	54	78
18	42		

Prepared in the Office of:

AECOM

AECOM TECHNICAL SERVICES OF NORTH CAROLINA, INC.
5438 WADE PARK BLVD, SUITE 200, RALEIGH, NC 27607
919-461-1100
F - 0342

DATE: 1/16/2023
TIME: 1:18:57 PM
DGN: c:\pwworking\ussrschmid02438\U5914_uc_ps#03.dgn

DocuSign Envelope ID: 9812DDB6-5162-4297-ADE4-6CFDF5B69368

PROJECT REFERENCE NO.	SHEET NO.
U-5914	UC-3B
DESIGNED BY:	1/17/2023
DRAWN BY:	
CHECKED BY:	
APPROVED BY:	
REVISED:	

NORTH CAROLINA DEPARTMENT OF TRANSPORTATION
UTILITIES ENGINEERING SEC.
PHONE:(919)707-6690
FAX:(919)250-4151

NORTH CAROLINA PROFESSIONAL SEAL 10666 ENGINEER D. STEPHEN SCRUGGS

DocuSigned by: D. Stephen Scruggs 957A10CE9DDE477...

UTILITY CONSTRUCTION

DOCUMENT NOT CONSIDERED FINAL UNLESS ALL SIGNATURES COMPLETED

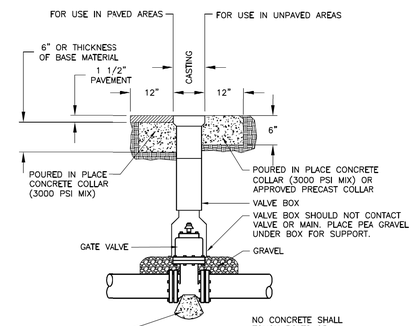

NOTES:

1. 2" GATE VALVES SHALL F.I.P. THREADS. CONNECTION TO THE PIPE SHALL BE MADE WITH BRASS NIPPLE AND SCH. 40 PVC F.I.P.T. X SLIP ADAPTERS.
2. GATE VALVES GREATER THAN 2" SHALL BE MECHANICAL JOINT.
3. WIRE FROM MAIN INTO VALVE BOX AND UP.

M.J. VALVE AND VALVE BOX

NTS SD 1-14

NORTH BRUNSWICK SANITARY DISTRICT	STANDARD DETAIL: SD 1-14 DATE: 01/01/08 Not To Scale ...
P.O. BOX 2230 516 VILLAGE ROAD NE LELAND, N.C. 28451-2230 TEL (910) 371-9949 FAX (910) 371-6441	**M.J. VALVE AND VALVE BOX**

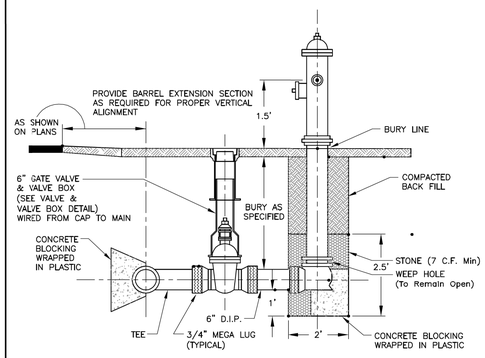

FIRE HYDRANT ASSEMBLY

NTS SD 1-16

NORTH BRUNSWICK SANITARY DISTRICT	STANDARD DETAIL: SD 1-16 DATE: 01/01/08 Not To Scale ...
P.O. BOX 2230 516 VILLAGE ROAD NE LELAND, N.C. 28451-2230 TEL (910) 371-9949 FAX (910) 371-6441	**FIRE HYDRANT ASSEMBLY**

BLOCKING	DIMENSIONS		
PIPE SIZE	Ⓐ	Ⓑ	Ⓒ
UP TO 10"	4'-0"	2'-6"	3'-0"
12" TO 16"	6'-0"	4'-0"	5'-0"
18" TO 24"	8'-0"	6'-0"	6'-0"

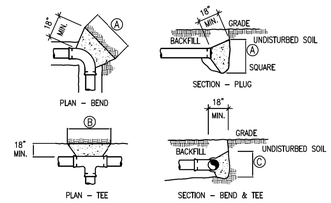

CONCRETE BLOCKING DETAILS

NTS SD 1-24

NORTH BRUNSWICK SANITARY DISTRICT	STANDARD DETAIL: SD 1-24 DATE: 01/01/08 Not To Scale ...
P.O. BOX 2230 516 VILLAGE ROAD NE LELAND, N.C. 28451-2230 TEL (910) 371-9949 FAX (910) 371-6441	**CONCRETE BLOCKING DETAILS**

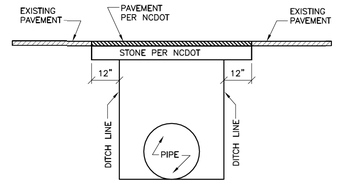

NOTES:
1. REFERENCE SPECIFICATIONS FOR BACKFILLING AND COMPACTION REQUIREMENTS.
2. CUT-BACK TO BE PERFORMED AFTER TRENCH BACK-FILLING AND COMPACTION.
3. NEW PAVEMENT TO MEET ALL NCDOT REQUIREMENTS.

PIPE INSTALLATION - PAVEMENT REPAIR

NTS SD 2-30

NORTH BRUNSWICK SANITARY DISTRICT	STANDARD DETAIL: SD 2-30 DATE: 01/01/08 Not To Scale ...
P.O. BOX 2230 516 VILLAGE ROAD NE LELAND, N.C. 28451-2230 TEL (910) 371-9949 FAX (910) 371-6441	**PIPE INSTALLATION - PAVEMENT REPAIR**

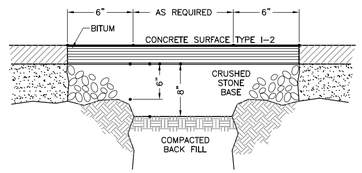

USE MATERIALS PER NCDOT REQUIREMENTS ON NCDOT DRIVEWAYS AND ROADWAYS.

PAVEMENT REPAIR

NTS SD 2-34

NORTH BRUNSWICK SANITARY DISTRICT	STANDARD DETAIL: SD 2-34 DATE: 01/01/08 Not To Scale ...
P.O. BOX 2230 516 VILLAGE ROAD NE LELAND, N.C. 28451-2230 TEL (910) 371-9949 FAX (910) 371-6441	**PAVEMENT REPAIR**

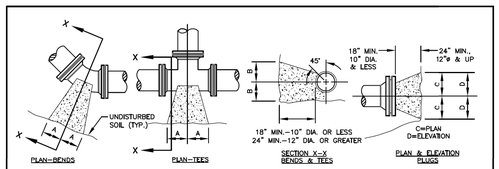

PIPE SIZE	90° BEND		45° BEND		22-1/2° BEND		11-1/4° BEND		TEE		PLUG	
	A	B	A	B	A	B	A	B	A	B	C	D
4"	18"	12"	10"	13"	7"	10"	7"	10"	12"	14"	13"	6"
6"	18"	12"	10"	13"	7"	10"	7"	10"	12"	14"	19"	9"
8"	24"	18"	13"	18"	10"	12"	10"	12"	16"	18"	25"	11"
10"	28"	22"	15"	22"	12"	15"	12"	15"	20"	22"	31"	14"
12"	32"	28"	19"	28"	14"	18"	14"	18"	22"	28"	37"	17"
16"	54"	38"	30"	36"	18"	36"	18"	36"	36"	42"	54"	24"

2000 PSF SOIL (SAND & GRAVEL WITH CLAY)

NOTES:

1. BASED ON 200 PSI STATIC PRESSURE PLUS AWWA WATER HAMMER ALLOWANCE.
2. ALL BEARING SURFACES TO BE CARRIED TO UNDISTURBED GROUND.
3. THRUST BLOCKS TO BE USED AT ALL LINES OPERATING UNDER PRESSURE.
4. KEEP ALL PIPING JOINTS CLEAR OF CONCRETE THRUST BLOCKS.
5. WRAP ALL FITTINGS IN PLASTIC.

THRUST BLOCKING DETAILS

NTS SD 1-26

NORTH BRUNSWICK SANITARY DISTRICT	STANDARD DETAIL: SD 1-26 DATE: 01/01/08 Not To Scale ...
P.O. BOX 2230 516 VILLAGE ROAD NE LELAND, N.C. 28451-2230 TEL (910) 371-9949 FAX (910) 371-6441	**THRUST BLOCKING DETAILS**

Prepared in the Office of:
AECOM
AECOM TECHNICAL SERVICES OF NORTH CAROLINA, INC.
5438 WADE PARK BLVD, SUITE 200, RALEIGH, NC 27607
919-461-1100
F - 0342

DATE: 1/16/2023
TIME: 12:50:03 PM
DGN: c:\pwworking\ncdms\02428\U5914_uc_pa#03B.dgn

DocuSign Envelope ID: 9812DDB6-5162-4297-ADE4-6CFDF5B69368

PROJECT REFERENCE NO.	SHEET NO.
U-5914	UC-3C

DESIGNED BY:
DRAWN BY: NONE
CHECKED BY:
APPROVED BY:
REVISED:

NORTH CAROLINA DEPARTMENT OF TRANSPORTATION

UTILITIES ENGINEERING SEC.
PHONE: (919) 707-6690
FAX: (919) 250-4151

1/17/2023

NORTH CAROLINA PROFESSIONAL SEAL 10666 ENGINEER D. STEPHEN SCRUGGS

DocuSigned by: D. Stephen Scruggs
DS7A1DCE3CDE477...

UTILITY CONSTRUCTION

DOCUMENT NOT CONSIDERED FINAL UNLESS ALL SIGNATURES COMPLETED

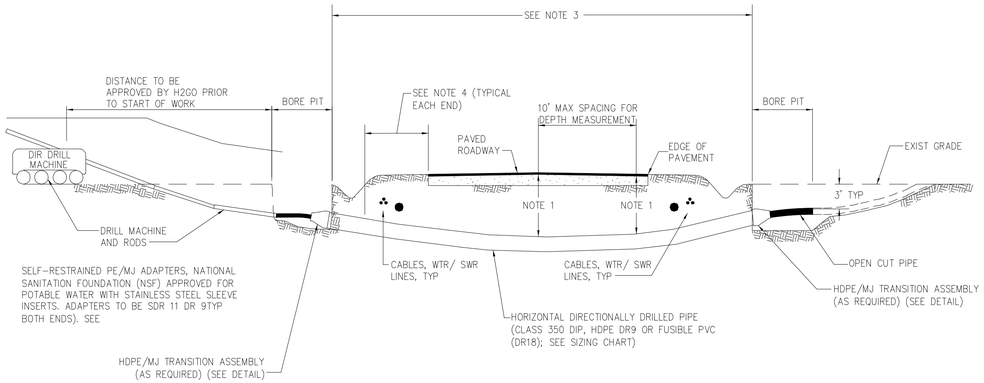

HDPE DIAMETER CONVERSION TABLE	
NOMINAL OPEN CUT PIPE SIZE (INCHES)	NOMINAL HDPE DR9 HDD PIPE SIZE (INCHES)
3	3
4	6
6	8
8	10
10	12
12	16
14	18
16	20
18	24
20	24
24	30
30	36

NOTES:

1. AN AS-BUILT PLAN AND PROFILE SHALL BE PROVIDED FROM ENTRY TO EXIT FOR EACH DIRECTIONAL BORE SECTION BY THE DIRECTIONAL BORE CONTRACTOR. THIS SHALL INCLUDE ACCURATE HORIZONTAL AND VERTICAL DIMENSIONS AND SHALL MEET OR EXCEED NCDOT VERTICAL REQUIREMENTS FROM HDD PIPE TO EDGE OF PAVEMENT.
2. ALL BORE SECTIONS SHALL BE HYDROSTATICALLY TESTED PER H2GO STANDARDS AFTER INSTALLATION, AND PRIOR TO CONNECTION TO THE OPEN CUT WATER/SEWER LINE. A FINAL TEST WILL BE A PART OF THE TOTAL MAIN LINE SYSTEM TEST.
3. LENGTH OF CROSSING, LOCATION OF INSPECTION/OBSERVATION EXCAVATION, NUMBER OF HDD PIPE JOINTS, LOCATION OF DRILL MACHINE, AUGER ENTRANCE LOCATION AND TIE-IN POINTS ARE TO BE APPROVED BY H2GO PRIOR TO ANY START OF WORK.
4. ON CONVENTIONAL HIGHWAYS, AS A MINIMUM, THE HDD PIPE SHALL EXTEND TO THE SHOULDER BREAK OR 10 FEET BEYOND THE EDGE OF PAVEMENT ON FILL SLOPES, WHICHEVER IS GREATER; 3 FEET BEYOND THE DITCH LINE IN CUTS; AND ON CURBED SECTIONS TO THE BACK OF THE SIDEWALK AREA. ON FREEWAYS, EXPRESSWAYS, AND OTHER CONTROLLED ACCESS HIGHWAYS, THE HDD PIPE WILL BE REQUIRED TO EXTEND TO THE ACCESS CONTROL LINES, TO THE OUTSIDE OF FRONTAGE ROADS, OR A SUFFICIENT DISTANCE TO ALLOW FOR FUTURE HIGHWAY IMPROVEMENTS, OR AS REQUIRED BY THE NCDOT ENCROACHMENT AGREEMENT.
5. THE BORE DEVELOPED FOR THE DIRECTIONALLY DRILLED PIPE SHALL BE KEPT AT A MINIMUM DIAMETER FOR THE PIPE INSTALLATION. THE AUGER HEAD SIZE SHALL BE APPROVED BY THE H2GO PRIOR TO THE START OF WORK.
6. HORIZONTAL DIRECTIONAL DRILL OF NCDOT STATE ROADS TO BE APPROVED BY NCDOT PRIOR TO CONSTRUCTION. PIPE MATERIAL AND THICKNESS MAY VARY.
7. THE CONTRACTOR SHALL ALLOW SUFFICIENT LENGTHS OF PIPE TO EXTEND PAST THE TERMINATION POINT TO ALLOW FOR CONTRACTION. PULLED HDD PIPE SHALL BE ALLOWED TO RELAX A MINIMUM OF (48) HOURS OR THE AMOUNT OF TIME RECOMMENDED BY THE MANUFACTURER PRIOR TO INITIAL PRESSURE TEST AND MAKING CONNECTIONS.
8. FUSIBLE PVC HAS BEEN APPROVED FOR USE WITHIN NCDOT RIGHT-OF-WAYS.
9. MINIMUM OF (3) RESTRAINED JOINTS ARE REQUIRED UPSTREAM AND DOWNSTREAM OF DIP/HDPE/FUSIBLE PVC MJ ADAPTER ON EACH END OF THE HORIZONTAL DIRECTIONALLY DRILLED PIPE UNLESS OTHERWISE APPROVED BY H2GO.
10. DETAIL SHEET TAKEN FROM BRUNSWICK COUNTY'S STANDARD WATER AND SEWER DETAILS AND MODIFIED FOR THIS PROJECT.

DIRECTIONAL DRILL DETAIL WS-4

HDPE/MJ TRANSITION ASSEMBLY WS-4A

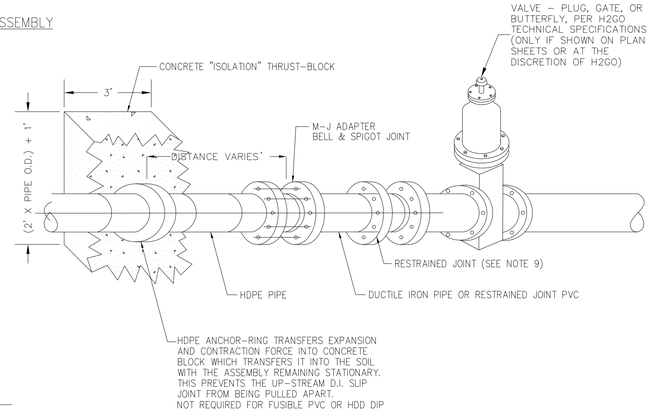

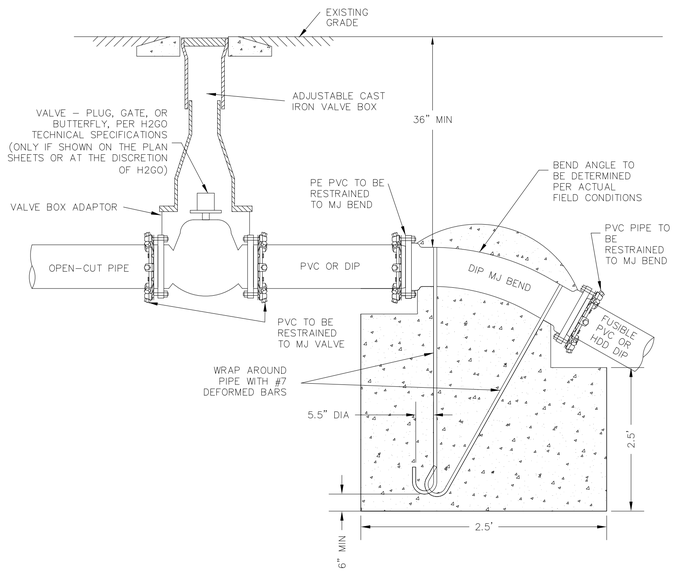

OPEN-CUT PIPE TO FUSIBLE PVC OR HDD DIP TRANSITION ASSEMBLY WS-4C

HDPE/MJ TRANSITION ASSEMBLY WS-4B

NOTES:

1. THIS DETAIL IS A GENERAL SCHEMATIC SHOWING ISOLATION VALVE LOCATIONS AND AIR RELEASE VALVES.
2. FINAL LOCATION OF PIPE APPURTENANCES SHALL BE COORDINATED WITH H2GO ALONG WITH PIPE MATERIAL AND METHOD OF CONSTRUCTION.

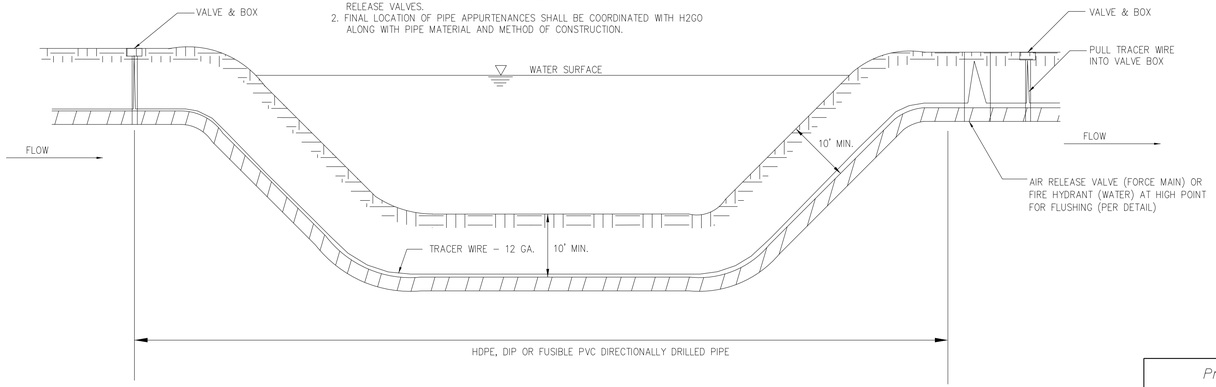

VALVE LOCATIONS FOR DIRECTIONAL DRILL OF PIPE UNDER WETLANDS/WATER BODY DETAIL WS-5

Prepared in the Office of:

AECOM

AECOM TECHNICAL SERVICES OF NORTH CAROLINA, INC.
5438 WADE PARK BLVD, SUITE 200, RALEIGH, NC 27607
919-461-1100
F - 0342

DATE: 1/16/2023
TIME: 12:39:59 PM
DGN: c:\pwworking\ncdms\102426\U5914_uc_pstM3C.dgn

DocuSign Envelope ID: 6C477B03-2299-4AF8-9636-04545DA0F415

PROJECT REFERENCE NO.	SHEET NO.
U-5914	UC-4
DESIGNED BY:	3/10/2023
DRAWN BY:	
CHECKED BY:	
APPROVED BY:	
REVISED:	
NORTH CAROLINA DEPARTMENT OF TRANSPORTATION	
UTILITIES ENGINEERING SEC. PHONE:(919)707-6690 FAX:(919)250-4151	

NORTH CAROLINA PROFESSIONAL SEAL 10666 ENGINEER D. STEPHEN SCRUGGS

Docusigned by: D. Stephen Scruggs 907A10CE3C06477...

UTILITY CONSTRUCTION

DOCUMENT NOT CONSIDERED FINAL UNLESS ALL SIGNATURES COMPLETED

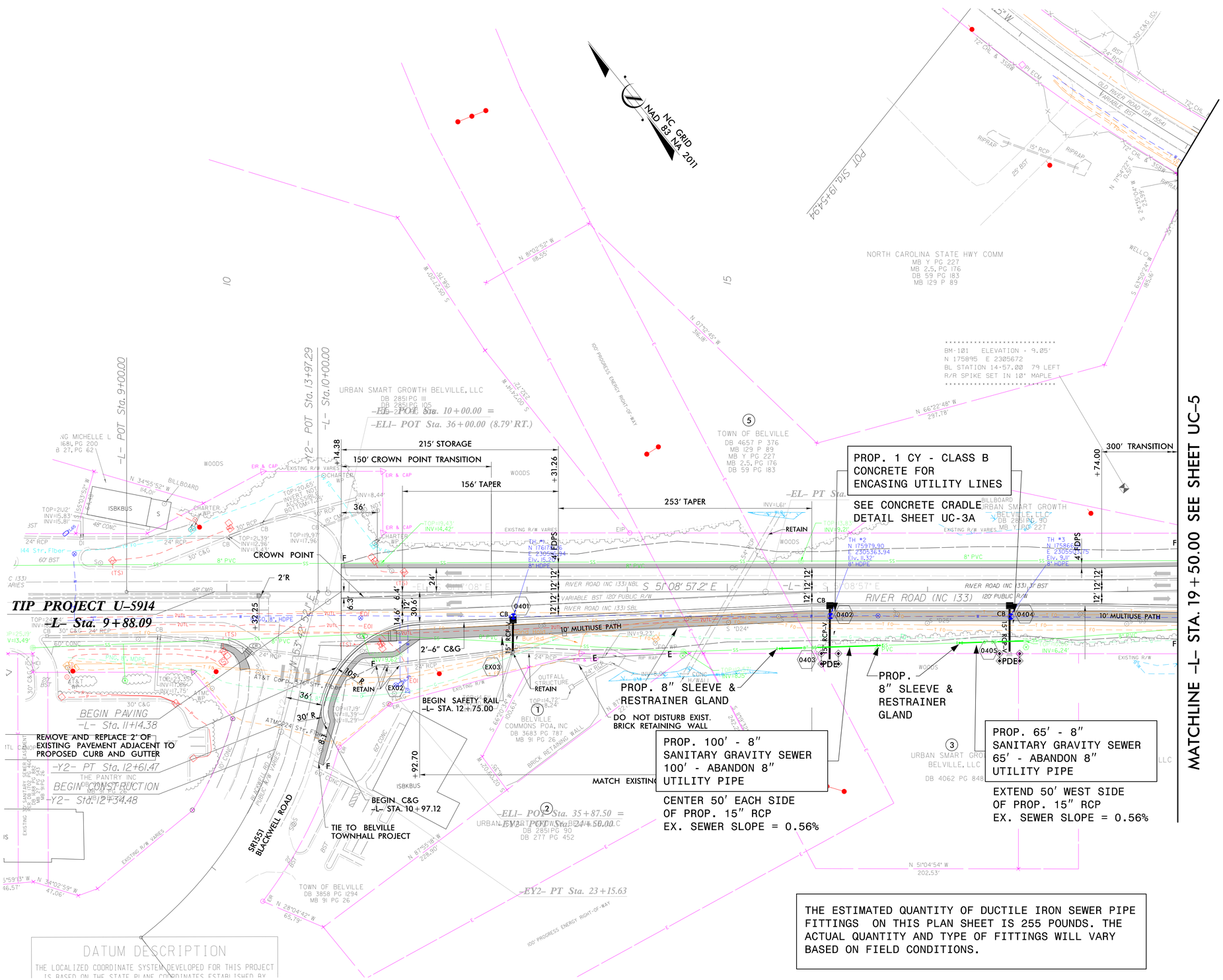

THE ESTIMATED QUANTITY OF DUCTILE IRON SEWER PIPE FITTINGS ON THIS PLAN SHEET IS 255 POUNDS. THE ACTUAL QUANTITY AND TYPE OF FITTINGS WILL VARY BASED ON FIELD CONDITIONS.

Prepared in the Office of:

AECOM

AECOM TECHNICAL SERVICES OF NORTH CAROLINA, INC.
5438 WADE PARK BLVD, SUITE 200, RALEIGH, NC 27607
919-461-1100
F - 0342

DATE: 3/9/2023
TIME: 1:47:04 PM
DGN: c:\pwworking\usnc\dms02426\U5914_uc_psht04.dgn

DocuSign Envelope ID: 6C477B03-2299-4AF8-9636-04545DA0F415

PROJECT REFERENCE NO.	SHEET NO.
U-5914	UC-5
DESIGNED BY:	3/10/2023
DRAWN BY:	
CHECKED BY:	
APPROVED BY:	
REVISED:	
NORTH CAROLINA DEPARTMENT OF TRANSPORTATION	
UTILITIES ENGINEERING SEC. PHONE:(919)707-6690 FAX:(919)250-4151	

NORTH CAROLINA PROFESSIONAL SEAL 10666 ENGINEER D. STEPHEN SCRUGGS

D. Stephen Scruggs

UTILITY CONSTRUCTION

DOCUMENT NOT CONSIDERED FINAL UNLESS ALL SIGNATURES COMPLETED

CUT AND TIE TO EXIST. 6″ PVC WATER LINE W/ 11.25 DEGREE RJDI BEND STA. 4+56.9 LINE WL2 END HDD STA. 4+45 W/ 6″ SLEEVE SEE NOTE 3 THIS SHEET

CUT AND TIE TO EXIST. 2″ FORCE MAIN SEWER W/ 2″ x 22.5 DEGREE BEND STA. 5+86 LINE FM1 SEE NOTE 1 THIS SHEET

PROP. 1 - 2″ VALVE RJ

PROP. 16′ - 2″ FORCE MAIN SEWER LINE FM1 - SEE SHEET UC-6 FOR PROFILE

3″ x 2″ HDPE REDUCER, 2″ x 22.5 DEGREE BEND STA. 5+69 LINE FM1 END HDD SEE NOTE 1 THIS SHEET

PROP. 1 - 6″ VALVE RJ

UNCOVER AND RESTRAIN A MINIMUM OF 60 FEET OF EXISTING 6″ PIPE WITH BELL RESTRAINT HARNESS SEE NOTE 3 THIS SHEET

PROP. 449′ - 3″ DR-9 HDPE FORCE MAIN SEWER 449′ - DIRECTIONAL DRILLING OF 3″ PIPE

LINE FM1 - SEE SHEET UC-6 FOR PROFILE

PROP. 430 - ABANDON 2″ UTILITY PIPE

PROP. 385′ - 6″ FPVC WATER LINE 385′ - DIRECTIONAL DRILLING OF 6″ PIPE

LINE WL2 - SEE SHEET UC-6 FOR PROFILE

PROP. 1- FIRE HYDRANT 10′ - HYDRANT LEG 1 - 6″ VALVE

PROP. 465′ - ABANDON 6″ UTILITY PIPE

PROP. 100′ - 8″ SANITARY GRAVITY SEWER 100′ - ABANDON 8″ UTILITY PIPE

LINE SGS1 - SEE SHEET UC-6 FOR PROFILE. SEE DRAINAGE DETAILS FOR CONFLICT BOX

PROP. 60′ - 6″ WATER LINE RJ DIP, LINE WL2 - SEE SHEET UC-6 FOR PROFILE

PROP. 1 - 6″ VALVE RJ

PROP. 6″ SLEEVE STA. 0+60 LINE WL2 BEGIN HDD

PROP. 8″ SLEEVE & RESTRAINER GLAND

PROP. 8″ SLEEVE & RESTRAINER GLAND

PLUG

PREVIOUSLY ABANDONED 2″ FORCE MAIN SEWER SEE NOTE 1 THIS SHEET

PROP. 2″ x 22.5 DEGREE BEND 3″ x 2″ HDPE REDUCER BEGIN HDD STA. 1+20

PROP. 36′ - 2″ FORCE MAIN SEWER

LINE FM1 - SEE SHEET UC-6 FOR PROFILE

CUT AND TIE TO EXIST. 2″ FORCE MAIN SEWER W/ 11.25 DEGREE BEND STA. 0+84.5 LINE FM1

CUT AND TIE TO EXIST. 6″ PVC WATER LINE W/ 22.5 DEGREE RJDI BEND STA. 0+00 LINE WL2 SEE NOTE 3 ON THIS SHEET.

RETAIN EXIST. 2″ PVC FORCE MAIN SEWER TO STA. 0+84.5 LINE FM1 SEE NOTE 2 THIS SHEET

EXIST. GRAVITY SEWER MANHOLE STA. 0+00.00 LINE FM1

TIE TO EXISTING DITCH

SPECIAL LATERAL V DITCH SEE DETAIL 1

SPECIAL LATERAL V DITCH SEE DETAIL 3

RETAIN

EST. 2 TON CLASS B RIP RAP

EST. 7 SY GEOTEXTILE

REMOVE

CUT AND TIE TO EXIST. 8″ HDPE WATER LINE W/ HDPE MJ ADAPTER WITH RESTRAINER GLAND AND 45 DEGREE RJDI BEND STA. 0+00 LINE WL1 SEE NOTE 4 THIS SHEET

PROP. 1 - 8″ VALVE

PROP. 195′ - ABANDON 8″ UTILITY PIPE

PROP. 8″ x 45 DEGREE RJDI BEND

PROP. 222′ - 8″ WATER LINE DIP, RJ LINE WL1- SEE SHEET UC-6 FOR PROFILE

PROP. 1 - 8″ VALVE

PROP. 1 - RELOCATE FIRE HYDRANT 14′ - 6″ HYDRANT LEG

EX. ISOLATION VALVE

CUT AND TIE TO EXIST. 8″ HDPE WATER LINE W/ HDPE MJ ADAPTER WITH RESTRAINER GLAND AND 45 DEGREE RJDI BEND STA. 2+22 LINE WL1 SEE NOTE 4 THIS SHEET

2 @ 7′x6′ RCBC w/1′ BURIED SEE DETAIL 2

CHANNEL TIE-IN

2′-6″ C&G

10′ MULTIUSE PATH

2′-6″ C&G

MATCHLINE –L– STA. 19+50.00 SEE SHEET UC-4

–L– POT Sta.24+55.29 = –Y1– POT Sta.10+00.00

–L– POT Sta.30+00.00

PT Sta.13+67.44

END TIP PROJECT U-5914

–L– Sta. 29+58.46

ADT 2019
ADT 2039 (IN HUNDREDS)

21/28

15/20

6/8

227/321

218/309

–Y1– OLD RIVER ROAD

–L– RIVER ROAD (NC 133)

NC GRID NAD 83 NA 2011

NOTES:

1. THERE ARE TWO EXISTING 2″ SEWER FORCE MAINS WITH ONE BEING OUT OF SERVICE AND THE SECOND BEING ACTIVE. THE CONTRACTOR SHALL COORDINATE WITH NCDOT TO VERIFY WHICH SEWER FORCE MAIN IS ACTIVE. CUT AND PLUG THE OUT OF SERVICE SEWER FORCE MAIN.
2. THE CONTRACTOR SHALL FIELD VERIFY THE LOCATION, SIZE, AND MATERIAL OF THE ACTIVE 2″ SEWER FORCE MAIN. THE INTERIOR DIAMETER OF THE NEW SEWER FORCE MAIN USED FOR HORIZONTAL DIRECTIONAL DRILLING SHALL HAVE AN INTERIOR DIAMETER EQUAL TO OR LARGER THAN THE EXISTING PIPE.
3. THE CONTRACTOR SHALL FIELD VERIFY THE LOCATION, SIZE, AND MATERIAL OF THE 6″ WATER LINE.
4. THE CONTRACTOR SHALL FIELD VERIFY THE LOCATION, SIZE, AND OUTSIDE DIAMETER OF THE EXISTING 8″ HDPE WATER MAIN.
5. STAGING AREAS FOR HDD ARE APPROX. 100′ x 50′ EACH. RECEIVING PITS FOR HDD ARE APPROX. 20′ x 30′ EACH. FLUID RETENTION AREA IN PITS SHALL BE A MINIMUM DISTANCE OF 20′ FROM WETLANDS LIMIT.
6. PROVIDE BY-PASS PUMPING FOR GRAVITY SEWER WHILE SEWER MAIN PIPING IS BEING REPLACED.

THE ESTIMATED QUANTITY OF DUCTILE IRON SEWER PIPE FITTINGS ON THIS PLAN SHEET IS 92 POUNDS. THE ACTUAL QUANTITY AND TYPE OF FITTINGS WILL VARY BASED ON FIELD CONDITIONS.

THE ESTIMATED QUANTITY OF DUCTILE IRON WATER PIPE FITTINGS ON THIS PLAN SHEET IS 1136 POUNDS. THE ACTUAL QUANTITY AND TYPE OF FITTINGS WILL VARY BASED ON FIELD CONDITIONS.

Prepared in the Office of:

AECOM

AECOM TECHNICAL SERVICES OF NORTH CAROLINA, INC.
5438 WADE PARK BLVD, SUITE 200, RALEIGH, NC 27607
919-461-1100
F - 0342

DATE: 3/9/2023
TIME: 05:28 PM
DGN: c:\projects\dms\024260\u5914_uc_pal05.dgn

DocuSign Envelope ID: 9812DDB6-5162-4297-ADE4-6CFDF5B69368

DOCUMENT NOT CONSIDERED FINAL UNLESS ALL SIGNATURES COMPLETED

Prepared in the Office of:
AECOM
AECOM TECHNICAL SERVICES OF NORTH CAROLINA, INC.
5438 WADE PARK BLVD, SUITE 200, RALEIGH, NC 27607
919-461-1100
F - 0342

PROJECT REFERENCE NO.	SHEET NO.
U-5914	UC-6

DESIGNED BY:
DRAWN BY:
CHECKED BY:
APPROVED BY:
REVISED:

NORTH CAROLINA DEPARTMENT OF TRANSPORTATION
UTILITIES ENGINEERING SEC.
PHONE:(919)707-6690
FAX:(919)250-4151

1/17/2023
NORTH CAROLINA PROFESSIONAL SEAL 10666 ENGINEER D. STEPHEN SCRUGGS
Docu Signed by: D. Stephen Scruggs
967A10CE305E477

UTILITY CONSTRUCTION

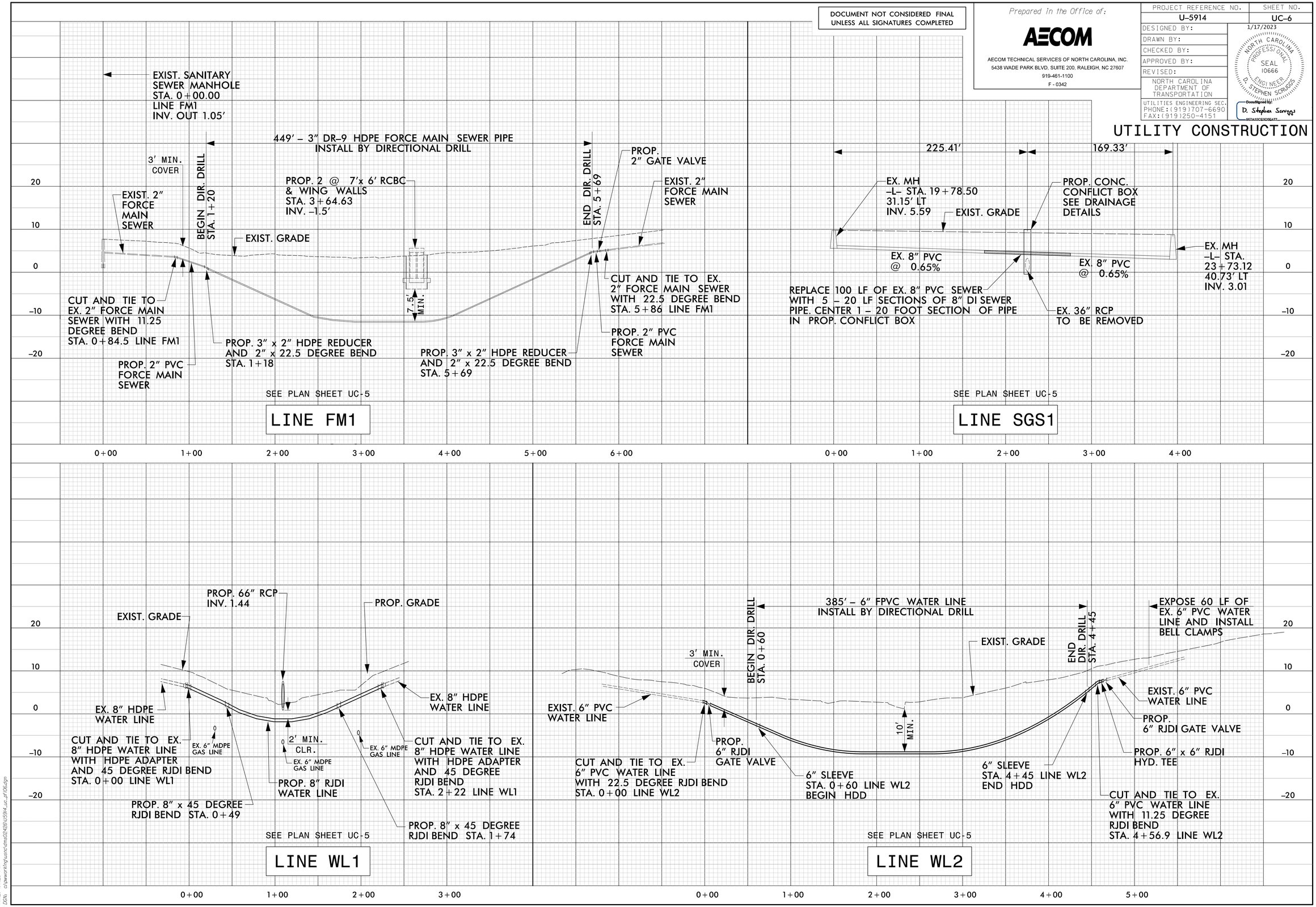

DATE: 1/16/2023
TIME: 1:46:20 PM
DGN: c:\pwworking\usnc\dms02426\U5914_uc_pf06.dgn

09/08/99

TIP PROJECT: U-5914

T.I.P. NO.	SHEET NO.
U-5914	UO-1

NOTE:
ALL UTILITY WORK SHOWN ON THIS SHEET WILL BE DONE BY OTHERS. NO PAYMENT WILL BE MADE TO THE CONTRACTOR FOR UTILITY WORK SHOWN ON THIS SHEET.

STATE OF NORTH CAROLINA
DIVISION OF HIGHWAYS

UTILITIES BY OTHERS PLANS
BRUNSWICK COUNTY

LOCATION: NC 133 FROM SR 1551 (BLACKWELL ROAD) TO SR 1554 (OLD RIVER ROAD)

TYPE OF WORK: UTILITIES BY OTHERS RELOCATIONS

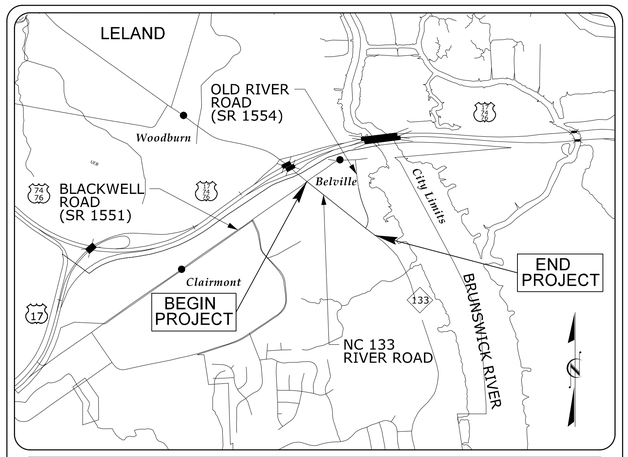

VICINITY MAP
NOT TO SCALE

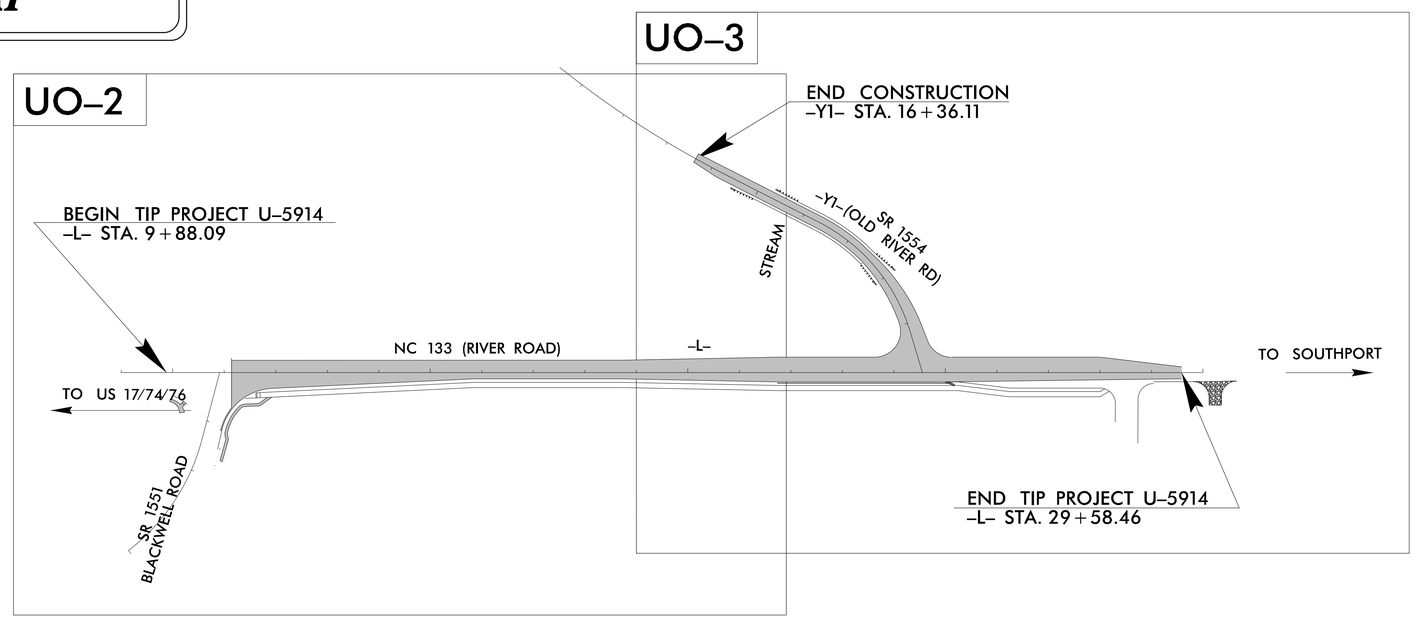



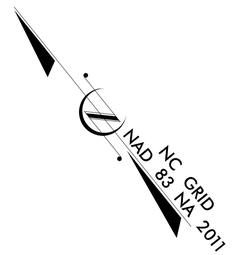

DOCUMENT NOT CONSIDERED FINAL UNLESS ALL SIGNATURES COMPLETED

RIGHT OF WAY DATE:
JANUARY 10, 2022

LETTING DATE:
APRIL 20, 2023

GRAPHIC SCALES

50 25 0 50 100
PLANS

50 25 0 50 100
PROFILE (HORIZONTAL)

10 5 0 10 20
PROFILE (VERTICAL)

INDEX OF SHEETS

SHEET NO.:	*DESCRIPTION:*
UO-1	*TITLE SHEET*
UO-2 THRU UO-3	*UBO PLAN SHEETS*

UTILITY OWNERS WITH CONFLICTS

(A) POWER DISTRIBUTION - DUKE ENERGY
(B) TELECOM - AT&T
(C) TELECOM - ATMC
(D) CATV - CHARTER/SPECTRUM
(E) GAS - PNG

PREPARED IN THE OFFICE OF:

AECOM

AECOM TECHNICAL SERVICES OF NORTH CAROLINA, INC.
5438 WADE PARK BLVD, SUITE 200, RALEIGH, NC 27607
919-461-1100
F - 0342

Meme Buscemi, PE — *UTILITY PROJECT MANAGER*
Gary Swinson — *PROJECT UTILITY COORDINATOR*

DIVISION OF HIGHWAYS
DIVISION 3

5501 BARBADOS BLVD.
CASTLE HAYNE, NC 28429
PHONE: (910) 341-2000
FAX: (910) 675-0143

D. Chad Kimes, PE — *DIVISION ENGINEER*
Eric C. Murray — *DIVISION PROJECT ENGINEER*
Lonny A. Sleeper — *DIVISION UTILITIES ENGINEER*
Chris Sutton — *DIVISION UTILITIES COORDINATOR*

2:32:46 PM
C:\pwworking\usnc\dms02406\U5914_uo_tsh.dgn
Swinsong

PROJECT REFERENCE NO.	SHEET NO.
U-5914	UO-2
THIS SHEET CORRESPONDS TO RDY- 4	

UTILITIES BY OTHERS

ALL PROPOSED UTILITY WORK SHOWN ON THIS SHEET WILL BE DONE BY OTHERS. NO PAYMENT WILL BE MADE TO THE CONTRACTOR FOR PROPOSED UTILITY WORK SHOWN ON THIS SHEET.

MATCHLINE –L– STA. 19+50.00 SEE SHEET UO-3

TIP PROJECT U-5914

–L– Sta. 9+88.09

REMOVE AND REPLACE 2' OF EXISTING PAVEMENT ADJACENT TO PROPOSED CURB AND GUTTER

–Y2– PT Sta. 12+61.47

EST. 2 TONS CLASS B RIP RAP
EST. 8 SY GEOTEXTILE

TIE TO BELVILLE TOWNHALL PROJECT

SR1551 BLACKWELL ROAD

–L– POT Sta. 9+88.09

–Y2– POT Sta. 13+97.29

–L– Sta. 10+00.00

BEGIN C&G
–L– STA. 10+97.12

–Y1–
PI Sta 11+35.60
Δ = 37° 27' 10.3" (LT)
D = 14° 19' 26.2"
L = 261.47'
T = 135.60'
R = 400.00'

BEGIN SAFETY RAIL
–L– STA. 12+75.00

RETAIN

DO NOT DISTURB EXIST. BRICK RETAINING WALL

END SAFETY RAIL
–L– STA. 14+50.00

MATCH EXISTING EDGE OF TRAVEL

EST. 1 TONS CLASS B RIP RAP
EST. 5 SY GEOTEXTILE

EST. 1 TON CLASS B RIP RAP
EST. 5 SY GEOTEXTILE

PROPOSED DUKE ENERGY U/G POWER
2/0 UG SEC.
BORE 2-4" (16' DEPTH)
1-2" COND.

(INSTALLED) CHARTER U/G CATV CABLES

(INSTALLED) AT&T U/G TEL CONDUIT

(INSTALLED) AT&T U/G TEL CONDUIT

REM

215' STORAGE
150' CROWN POINT TRANSITION
156' TAPER
253' TAPER
300' TRANSITION
36'
CROWN POINT
2'R
105' R
30' R
4' FDPS
2'–6" C&G
10' MULTIUSE PATH
RIVER ROAD (NC 133) NBL
RIVER ROAD (NC 133) SBL
RIVER ROAD (NC 133) 3F BST
VARIABLE BST 120' PUBLIC R/W
S 5°08'57.2" E
N 53°42'52.2" E
RETENTION POND
BRICK RETAINING WALL
100' PROGRESS ENERGY RIGHT-OF-WAY
OUTFALL STRUCTURE
WOODS
EXISTING R/W
8" PVC
24" RCP
15" RCP
18" RCP
25 BST
30" C&G (CONC)
72" CMP & 35SW
PI ECM
RIPRAP
15" RCP
25 BST
30" C&G (CONC)
72" CMP & 35SW
PI ECM
OLD RIVER ROAD (SR 1554)
VARIABLE BST
PROP U/G TEL CONDUIT
PROP U/G POW CONDUIT
WELL
PDE
EX. R/W
+50.00
+76.00
+30.00 EX. R/W
+14.38
+31.26
+74.00
+92.70
+84.46
+50.00
+76.00

NORTH CAROLINA STATE HWY COMM
MB Y PG 227
MB 2.5, PG 176
DB 59 PG 183
MB 129 P 89

TOWN OF BELVILLE
DB 4657 P 376
MB 129 P 89
MB Y PG 227
MB 2.5, PG 176
DB 59 PG 183

URBAN SMART GROWTH BELVILLE, LLC
DB 2851 PG 58
DB 2851 PG 111
DB 2851 PG 105
DB 277 PG 808

BELVILLE COMMONS POA, INC
DB 3683 PG 787
MB 91 PG 26

BELVILLE FUNDING LLC
DB 3055 PG 477
MB 91 PG 26

URBAN SMART GROWTH BELVILLE, LLC
DB 2851 PG 90
DB 277 PG 452

URBAN SMART GROWTH BELVILLE, LLC
DB 4062 PG 848

URBAN SMART GROWTH BELVILLE, LLC
DB 2851 PG 90
DB 277 PG 452

60' ACCESS EASEMENT
DB 1458 PG 561

N 8°02'52" W 118.55
N 07°42'45" W 316.28'
N 00°56'00" E 254.63'
N 87°59'33" W 456.84'
N 02°41'29" E 41.56'
S 66°52'41" W 100.66'
S 87°59'32" W 232.29'
S 87°50'23" E 95.77'
N 39°24'36" W 298.94'
S 38°53'09" W 24.95'
N 51°04'54" W 202.53'

Prepared in the Office of:

AECOM

AECOM TECHNICAL SERVICES OF NORTH CAROLINA, INC.
5438 WADE PARK BLVD, SUITE 200, RALEIGH, NC 27607
919-461-1100
F - 0342

c:\pwworkingdir\jobs\02406\U5914_uo_psh04.dgn
9:37:08 AM

PROJECT REFERENCE NO.	SHEET NO.
U-5914	U0-3
THIS SHEET CORRESPONDS TO RDY- 5	

UTILITIES BY OTHERS

ALL PROPOSED UTILITY WORK SHOWN ON THIS SHEET WILL BE DONE BY OTHERS. NO PAYMENT WILL BE MADE TO THE CONTRACTOR FOR PROPOSED UTILITY WORK SHOWN ON THIS SHEET.

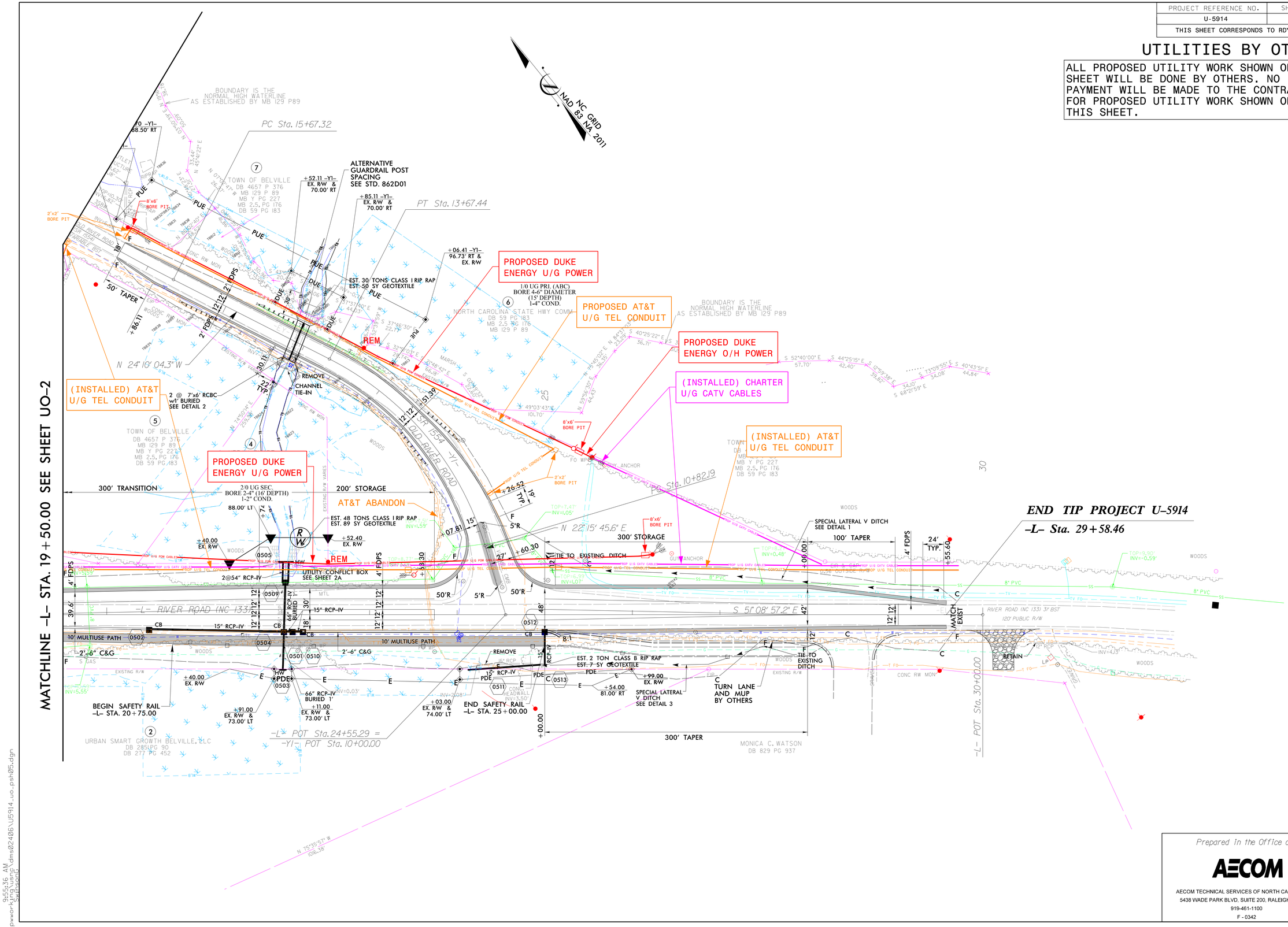

Prepared in the Office of:

AECOM

AECOM TECHNICAL SERVICES OF NORTH CAROLINA, INC.
5438 WADE PARK BLVD, SUITE 200, RALEIGH, NC 27607
919-461-1100
F - 0342

9:55:36 AM
c:\pwworking\usnc\dms02406\U5914_uo_psh05.dgn
SwinsonG

PROJ. REFERENCE NO.	SHEET NO.
U-5914	X-0

DOCUMENT NOT CONSIDERED FINAL UNLESS ALL SIGNATURES COMPLETED

INDEX OF CROSS SECTION SHEETS

-L- NC-133 (RIVER ROAD)	X-1 TO X-8
-Y1- OLD RIVER ROAD	X-9 TO X-11

Note: Approximate quantities only. Unclassified Excavation, Borrow Excavation, Fine Grading, Clearing and Grubbing, and Removal of Existing Asphalt Pavement will be paid for at the contract lump sum price for "Grading."

8/23/99
3/3/2023
pw:\\aecom-na-pw.bentley.com:AECOM_USA_North_Carolina\Documents\60512233-U-5914 - NC 133\900-CAD GIS\910_CAD\70_NCDOT_TIP\Roadway\CorridorModeling\u5914_rdy_xpl_sht_01.dgn
MwebazaG

PROJ. REFERENCE NO.	SHEET NO.
U-5914	X-1A

STATE OF NORTH CAROLINA
DIVISION OF HIGHWAYS

Approximate quantities only.

NOTE: EMBANKMENT COLUMN DOES NOT INCLUDE BACKFILL FOR UNDERCUT

CROSS-SECTION SUMMARY

Station L	Uncl. Exc. (cu. yd.)	Embt (cu. yd.)	Station Y1	Uncl. Exc. (cu. yd.)	Embt (cu. yd.)	Station	Uncl. Exc. (cu. yd.)	Embt (cu. yd.)	Station	Uncl. Exc. (cu. yd.)	Embt (cu. yd.)	Station	Uncl. Exc. (cu. yd.)	Embt (cu. yd.)	Station	Uncl. Exc. (cu. yd.)	Embt (cu. yd.)
11+14.38	0	0	15+50.00	0	58												
11+50.00	0	42	16+00.00	5	27												
12+00.00	44	5	16+36.11	3	5												
12+50.00	9	4															
13+00.00	7	4															
13+50.00	7	4															
14+00.00	7	4															
14+50.00	**7**	**4**															
15+00.00	**8**	**5**															
15+50.00	**10**	**6**															
16+00.00	11	6															
16+50.00	10	5															
17+00.00	8	4															
17+50.00	8	5															
18+00.00	9	5															
18+50.00	10	6															
19+00.00	10	5															
19+50.00	9	5															
20+00.00	9	5															
20+50.00	8	4															
21+00.00	7	4															
21+50.00	7	4															
22+00.00	6	3															
22+50.00	6	3															
23+00.00	5	2															
23+50.00	3	1															
24+00.00	1	0															
24+50.00	0	0															
25+00.00	6	6															
25+50.00	9	4															
26+00.00	12	9															
26+50.00	25	18															
27+00.00	42	27															
27+50.00	48	25															
28+00.00	47	26															
28+50.00	56	35															
29+00.00	60	30															
29+50.00	62	37															
29+70.00	0	0															

Station Y1	Uncl. Exc. (cu. yd.)	Embt (cu. yd.)
10+31.30	0	0
10+50.00	0	8
11+00.00	0	51
11+50.00	0	69
12+00.00	0	91
12+50.00	0	100
13+00.00	0	125
13+50.00	0	188
14+00.00	0	214
14+50.00	0	182
15+00.00	0	119

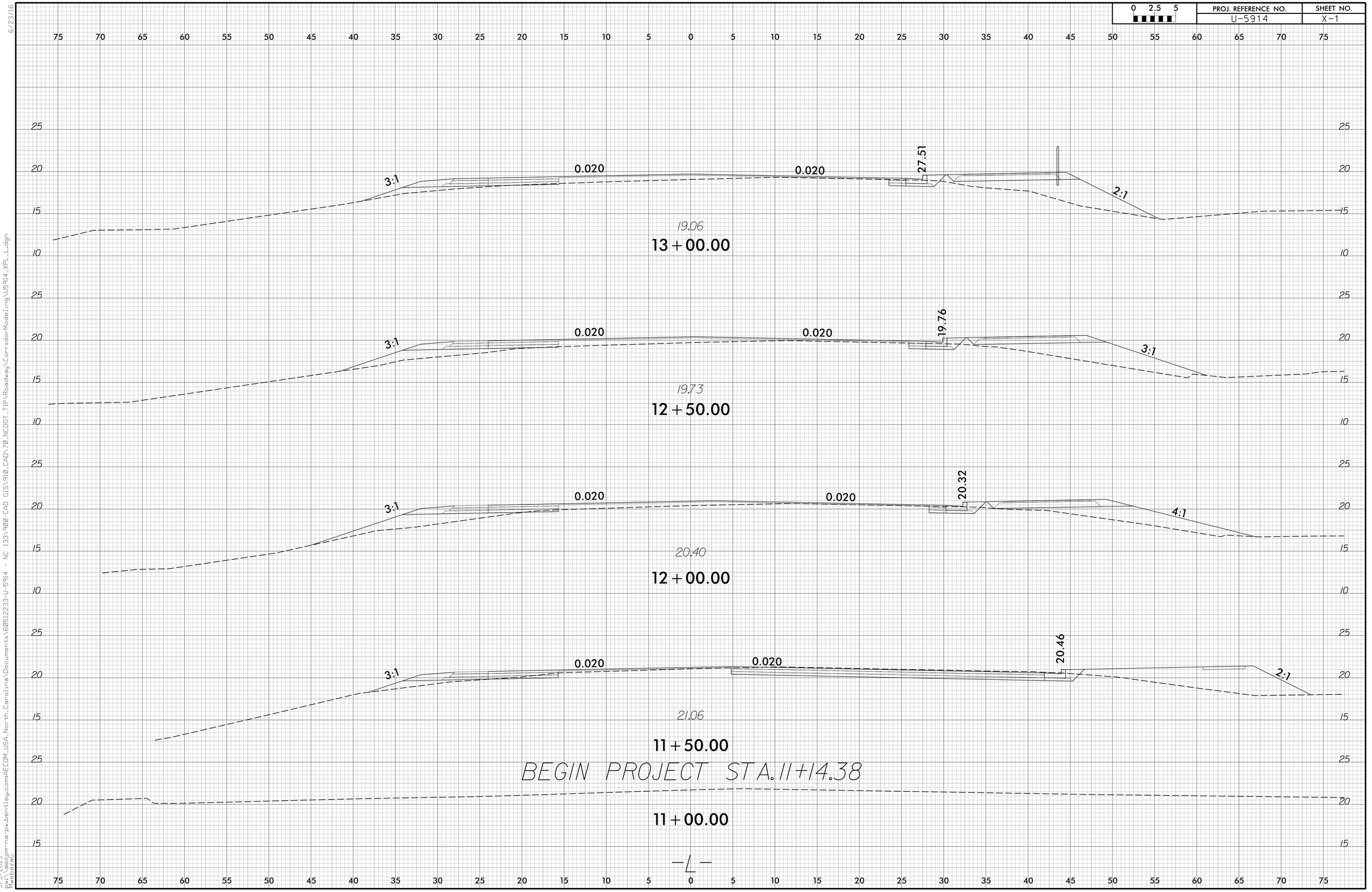

6/23/16

3/3/2023
pw:\\aecom-na-pw.bentley.com:AECOM_USA_North_Carolina\Documents\60512233-U-5914 - NC 133\900-CAD GIS\910_CAD\70_NCDOT_TIP\Roadway\CorridorModeling\U5914_XPL_L.dgn
MwebazaG

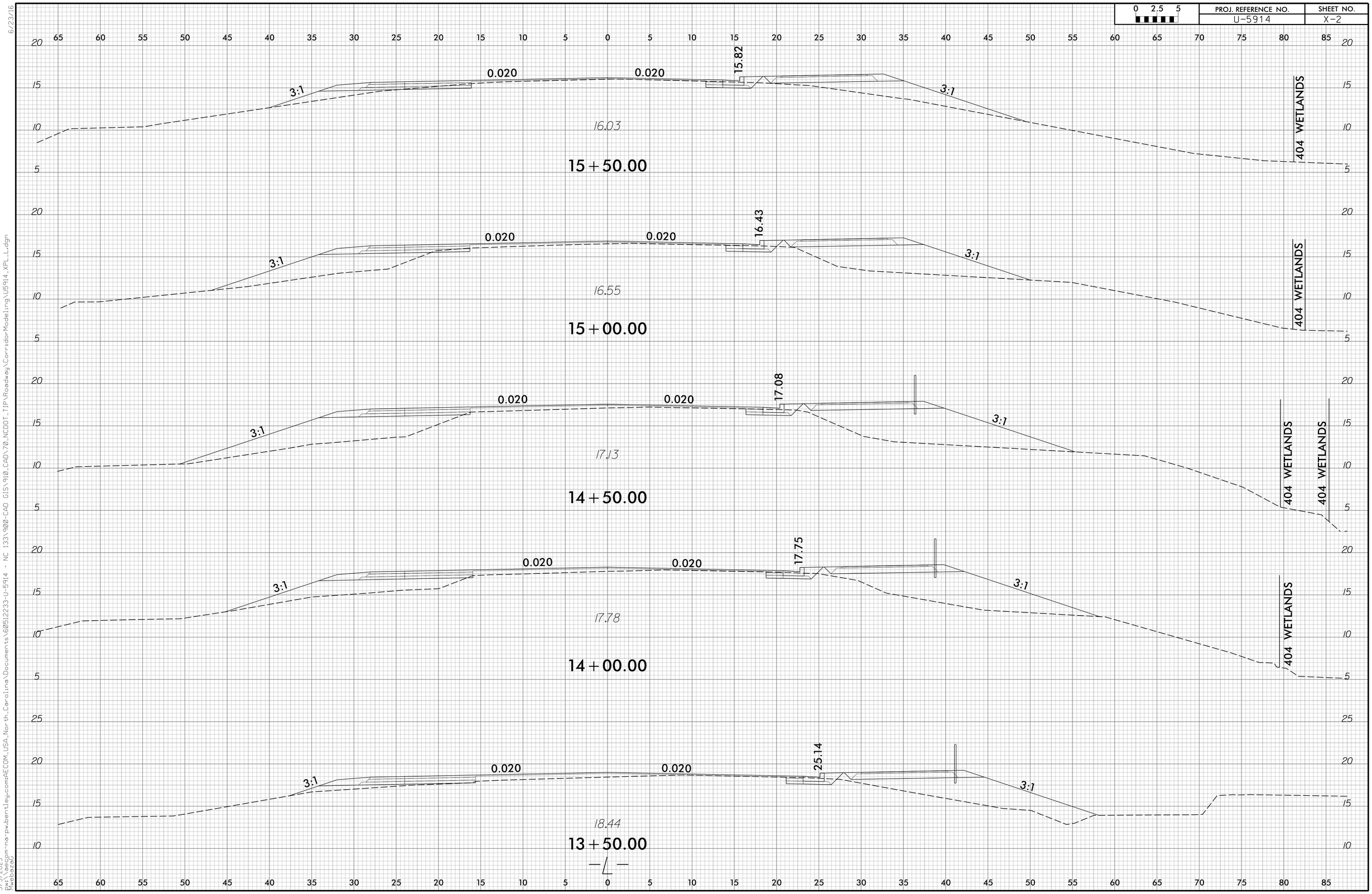

6/23/16

3/3/2023
pw:\\aecom-na-pw.bentley.com:AECOM_USA_North_Carolina\Documents\60512233-U-5914 - NC 133\900-CAD GIS\910_CAD\70_NCDOT_TIP\Roadway\CorridorModeling\U5914_XPL_L.dgn
MwebazaG

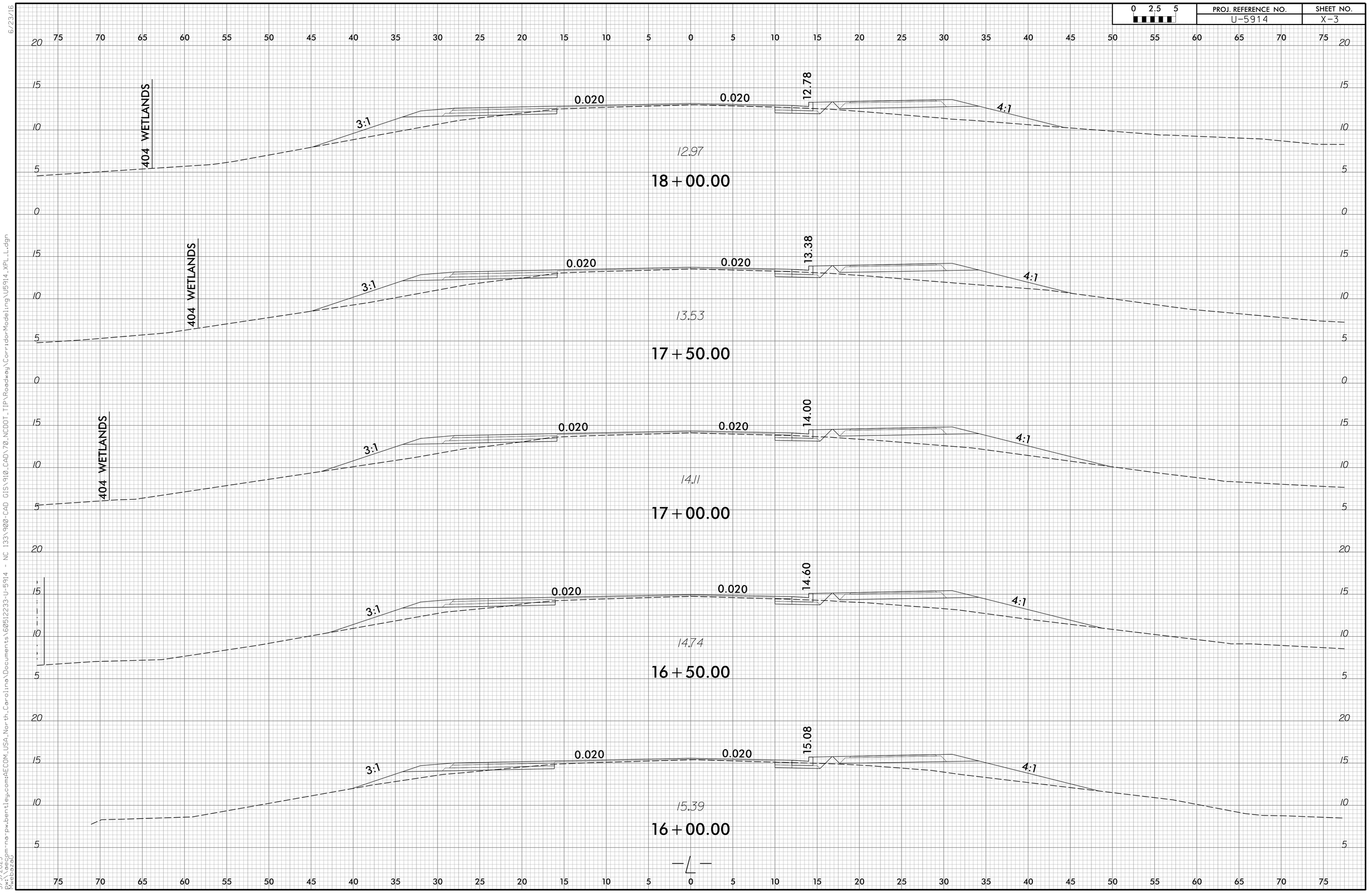

6/23/16

3/3/2023
pw:\\aecom-na-pw.bentley.com:AECOM_USA_North_Carolina\Documents\60512233-U-5914 - NC 133\900-CAD GIS\910_CAD\70_NCDOT_TIP\Roadway\CorridorModeling\U5914_XPL_L.dgn
MwebazaG

PROJ. REFERENCE NO.	SHEET NO.
U-5914	X-4

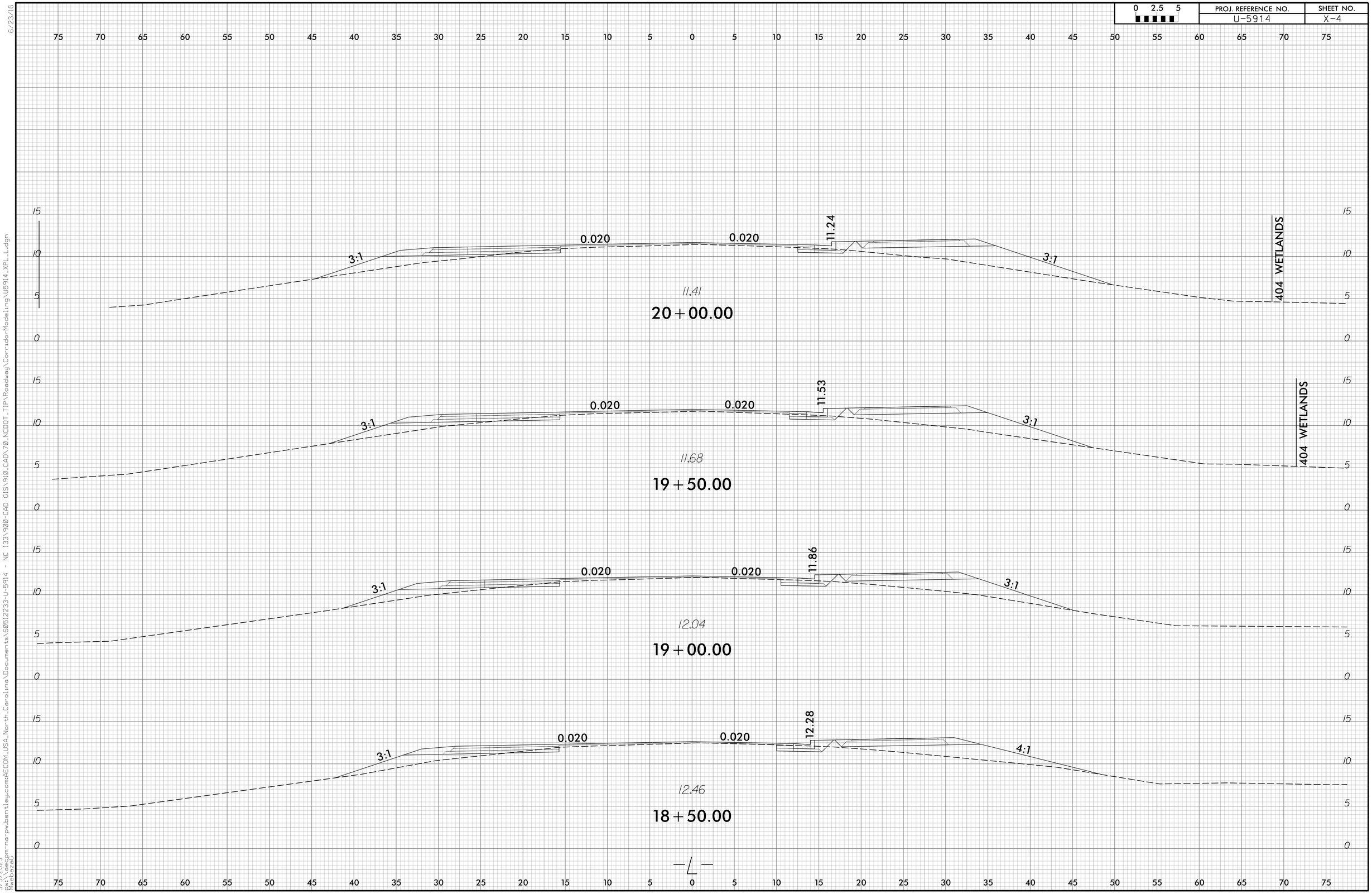

6/23/16

3/3/2023
pw:\\aecom-na-pw.bentley.com:AECOM_USA_North_Carolina\Documents\60512233-U-5914 - NC 133\900-CAD GIS\910_CAD\70_NCDOT_TIP\Roadway\CorridorModeling\U5914_XPL_L.dgn
MwebazaG

PROJ. REFERENCE NO.	SHEET NO.
U-5914	X-5

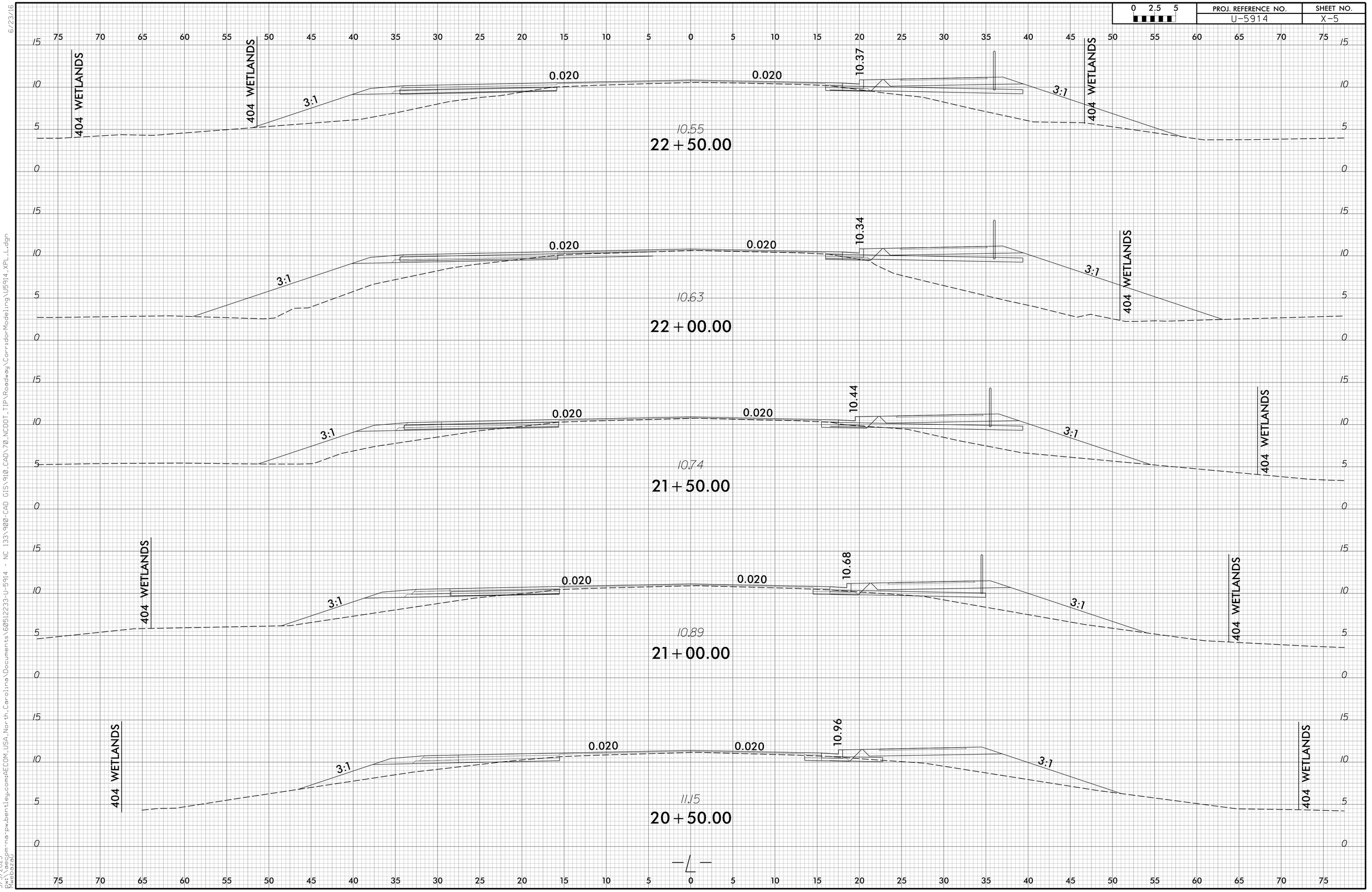

6/23/16
3/3/2023
pw:\\aecom-na-pw.bentley.com:AECOM_USA_North_Carolina\Documents\60512233-U-5914 - NC 133\900-CAD GIS\910_CAD\70_NCDOT_TIP\Roadway\CorridorModeling\U5914_XPL_L.dgn
MwebazaG

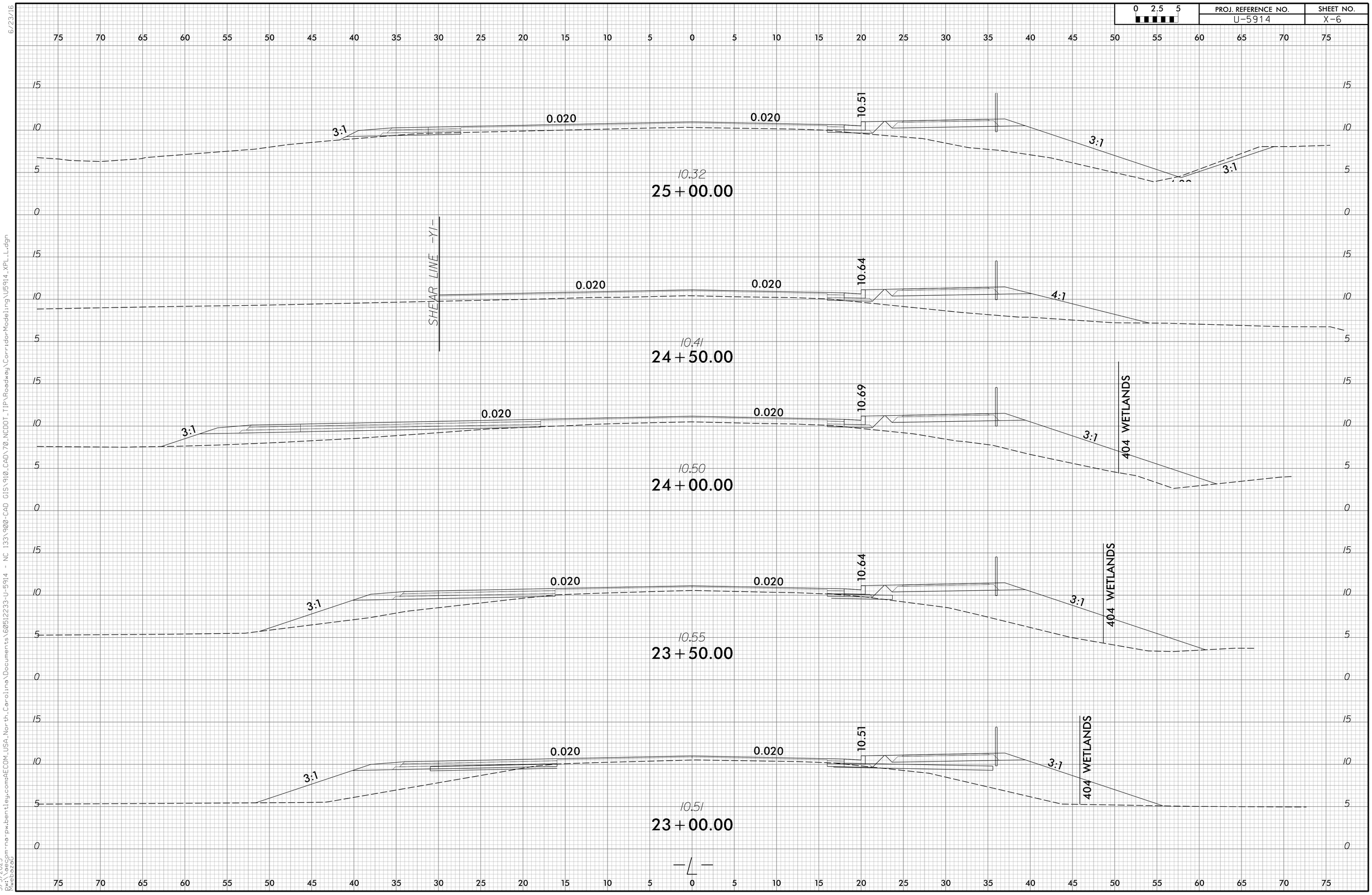

6/23/16

3/3/2023
pw:\\aecom-na-pw.bentley.com:AECOM_USA_North_Carolina\Documents\60512233-U-5914 - NC 133\900-CAD GIS\910_CAD\70_NCDOT_TIP\Roadway\CorridorModeling\U5914_XPL_L.dgn
MwebazaG

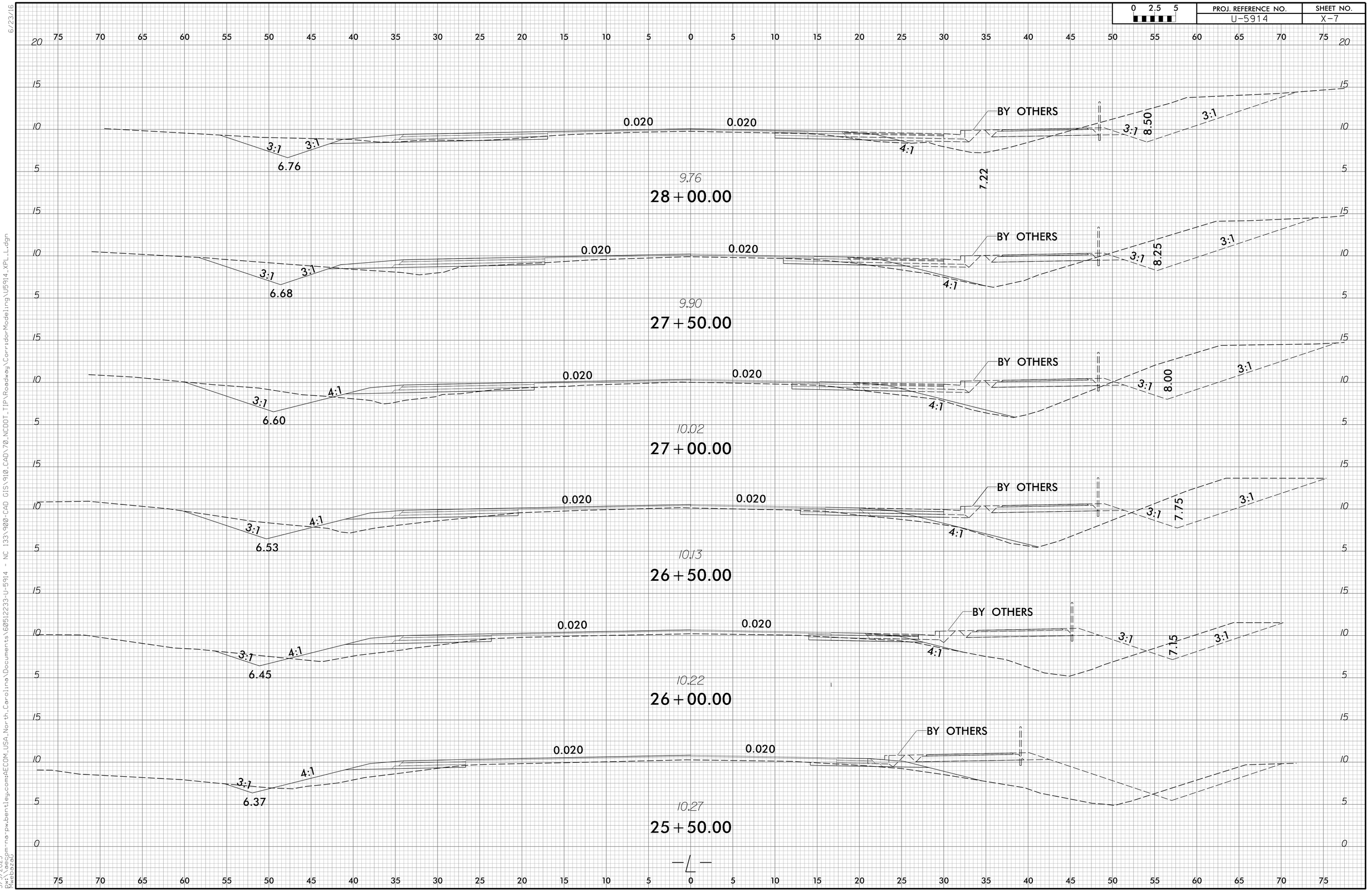

6/23/16

3/3/2023
pw:\\aecom-na-pw.bentley.com:AECOM_USA_North_Carolina\Documents\60512233-U-5914 - NC 133\900-CAD GIS\910_CAD\70_NCDOT_TIP\Roadway\CorridorModeling\U5914_XPL_L.dgn
MwebezaG

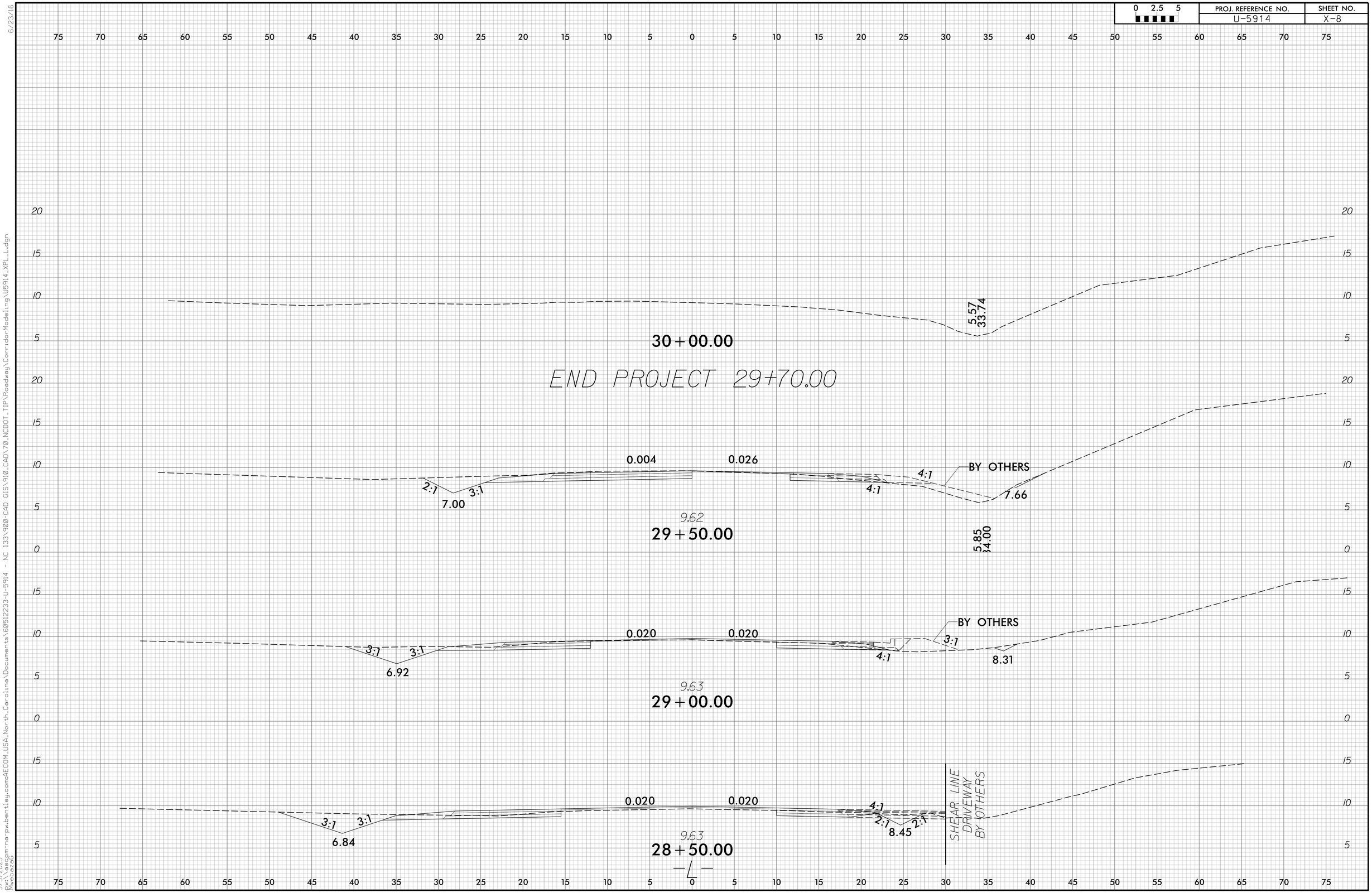

6/23/16

3/3/2023
pw:\\aecom-na-pw.bentley.com:AECOM_USA_North_Carolina\Documents\60512233-U-5914 - NC 133\900-CAD GIS\910_CAD\70_NCDOT_TIP\Roadway\CorridorModeling\U5914_XPL_L.dgn
MwebazaG

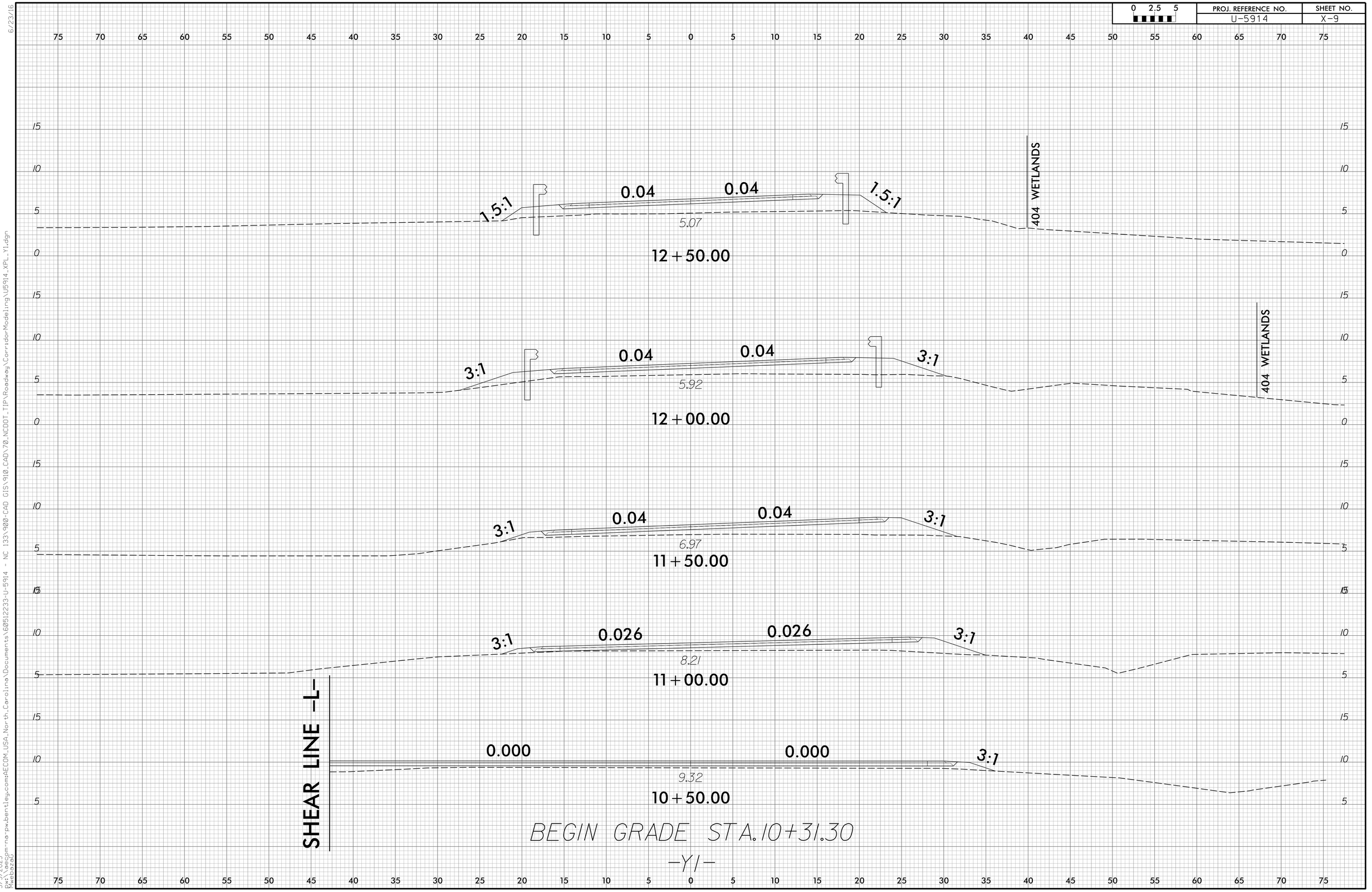

6/23/16

3/3/2023
pw:\\aecom-na-pw.bentley.com:AECOM_USA_North_Carolina\Documents\60512233-U-5914 - NC 133\900-CAD GIS\910_CAD\70_NCDOT_TIP\Roadway\CorridorModeling\U5914_XPL_Y1.dgn
MwebazaG

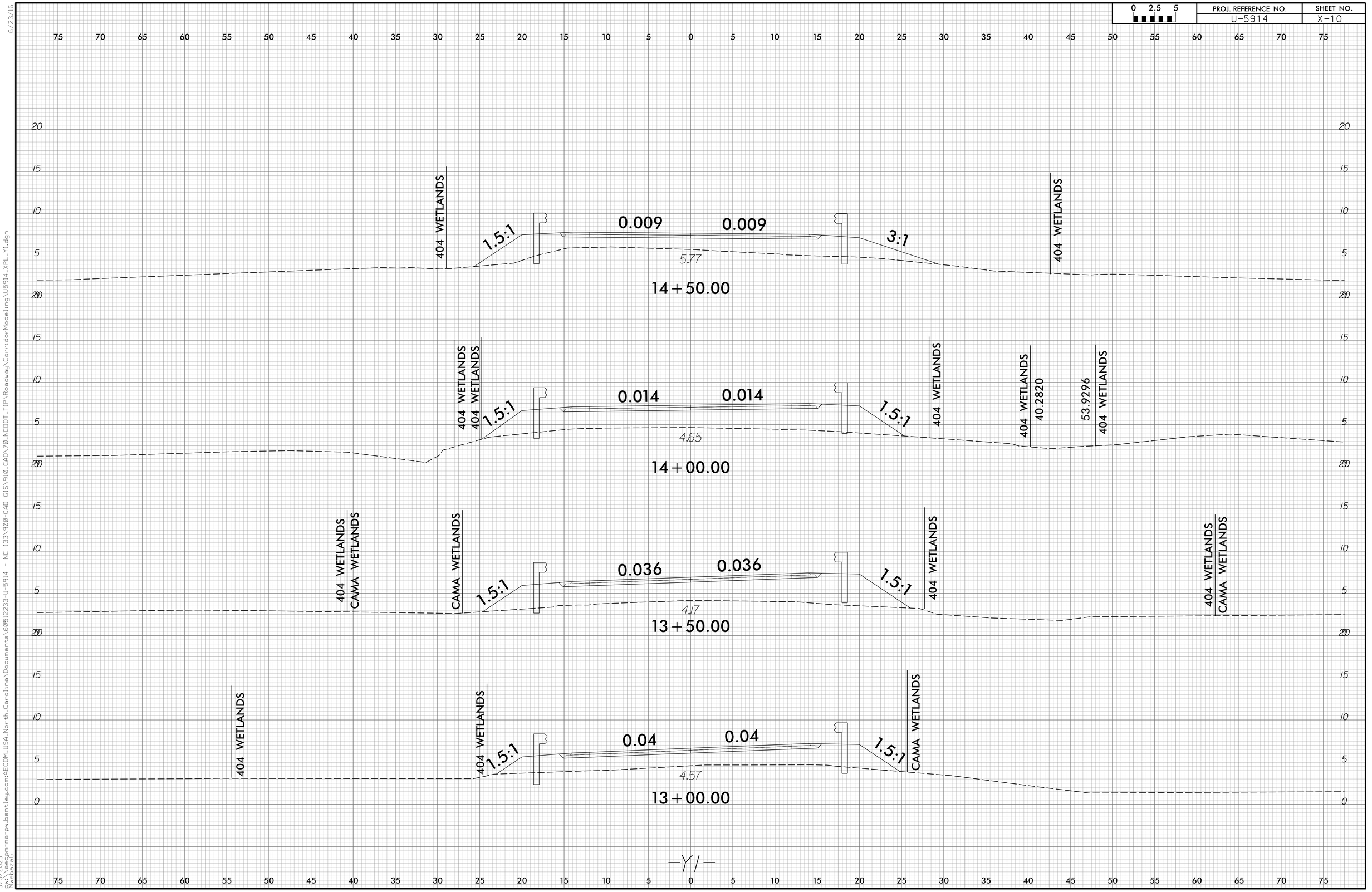

6/23/16

3/3/2023
pw:\\aecom-na-pw.bentley.com:AECOM_USA_North_Carolina\Documents\60512233-U-5914 - NC 133\900-CAD GIS\910_CAD\70_NCDOT_TIP\Roadway\CorridorModeling\U5914_XPL_Y1.dgn
MwebazaG

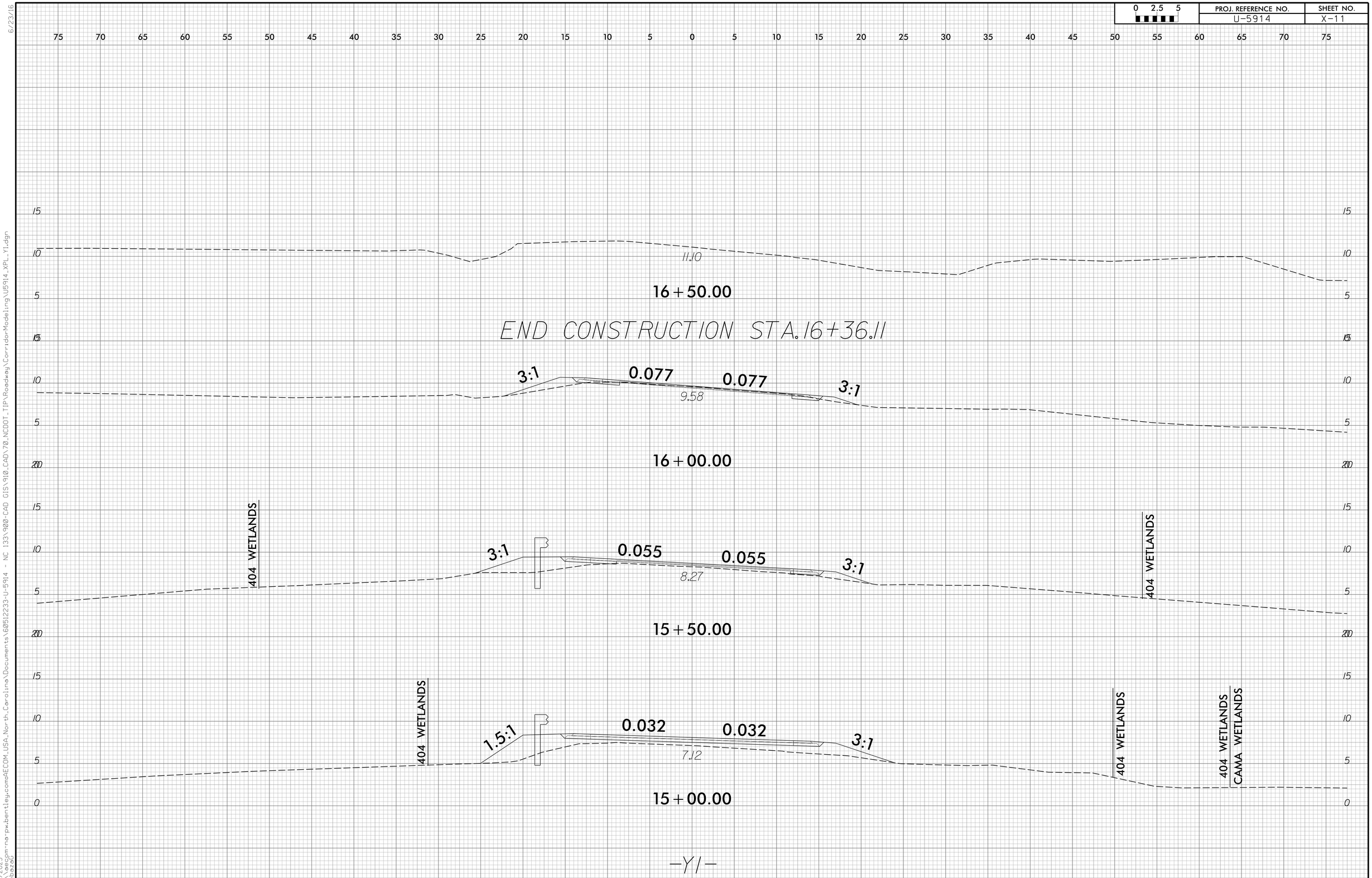

6/23/16

3/3/2023
pw:\\aecom-na-pw.bentley.com:AECOM_USA_North_Carolina\Documents\60512233-U-5914 - NC 133\900-CAD GIS\910_CAD\70_NCDOT_TIP\Roadway\CorridorModeling\U5914_XPL_Y1.dgn
MwebazaG

DocuSign Envelope ID: 3E14618D-32A1-47B5-938A-69B8FF8F91E6

TIP PROJECT: U-5914

CONTRACT: DC00424

STATE OF NORTH CAROLINA
DIVISION OF HIGHWAYS

STATE	STATE PROJECT REFERENCE NO.	SHEET NO.	TOTAL SHEETS
N.C.	U-5914	1	

STATE PROJ. NO.	F.A. PROJ. NO.	DESCRIPTION
44647.1.1		PE
44647.2.1		R/W
44647.3.1		CONST

BRUNSWICK COUNTY

LOCATION: NC 133 FROM SR 1551 (BLACKWELL ROAD) TO SR 1554 (OLD RIVER ROAD) EAST OF OLD RIVER

TYPE OF WORK: GRADING, PAVING, WIDENING, STRUCTURES, DRAINAGE RESURFACING, SIGNALS, AND SIGNING

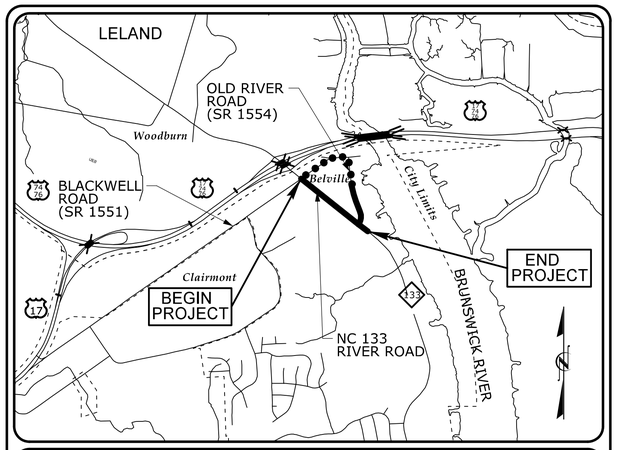

VICINITY MAP
NOT TO SCALE ••• DETOUR



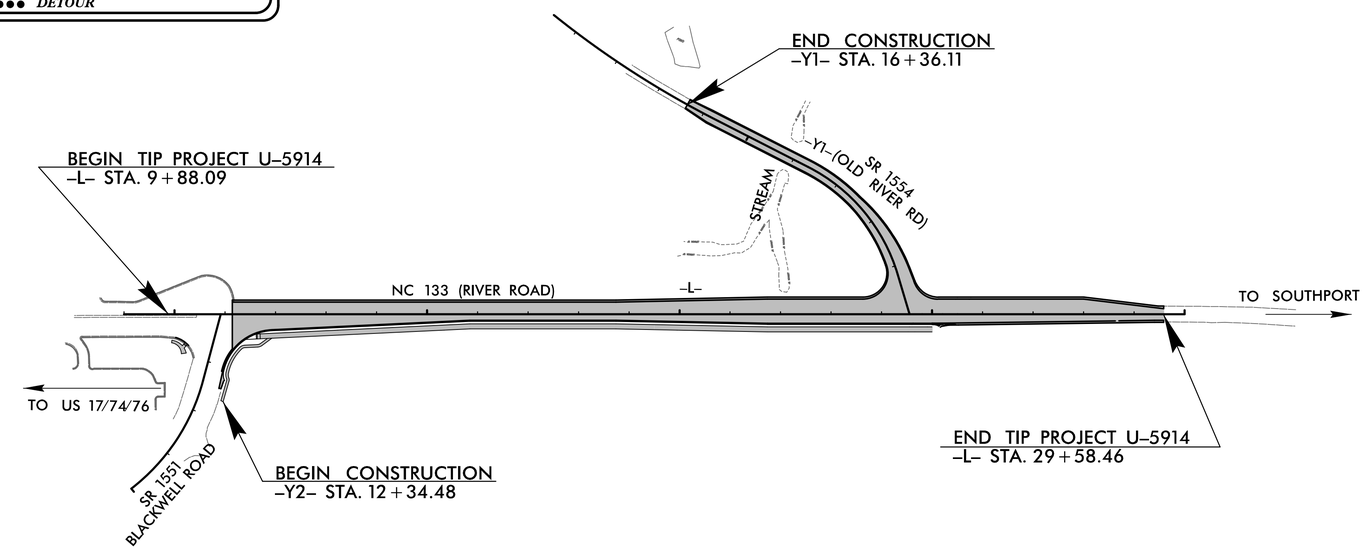



CULVERT

DOCUMENT NOT CONSIDERED FINAL UNLESS ALL SIGNATURES COMPLETED

DESIGN DATA

ADT 2019 = 22,700
ADT 2039 = 32,100
K = 10 %
D = 60 %
T = 4 % *
V = 50 MPH
* TTST =1% DUAL 3%
FUNC CLASS = MINOR ARTERIAL TIER

PROJECT LENGTH

LENGTH ROADWAY TIP PROJECT U-5914 = 0.373 MILES
TOTAL LENGTH OF TIP PROJECT U-5914 = 0.373 MILES

Prepared in the Office of:
AECOM
NC FIRM LICENSE No: F-0342
5438 Wade Park Blvd, Suite 200
Raleigh, NC 27607
(919) 854-6200

2018 STANDARD SPECIFICATIONS

RIGHT OF WAY DATE: JANUARY 10, 2022

LETTING DATE: APRIL 20, 2023

EDWARD G. EDENS, P.E.
PROJECT ENGINEER

PATRICK B. MCPHERSON, E.I.
PROJECT DESIGN ENGINEER

ERIC C. MURRAY
PROJECT ENGINEER
NCDOT CONTACT

STRUCTURE DESIGN ENGINEER

NORTH CAROLINA PROFESSIONAL SEAL 030474 ENGINEER JOHN C. MORRISON
DocuSigned by: John C. Morrison
A2FDE142C92F4AB...
3/7/2023

JOHN C. MORRISON P.E.
SIGNATURE:

STATE OF NORTH CAROLINA DEPARTMENT OF TRANSPORTATION

3/7/2023
pw:\\aecom-na-pw.bentley.com:AECOM_USA_North_Carolina\Documents\60512233-U-5914 - NC 133\900-CAD GIS\910_CAD\70_NCDOT_TIP\Structures\02 Drawings\400_000_U5914_TSH_CI-00.dgn
09/08/99
caterm

DocuSign Envelope ID: 3E14618D-32A1-47B5-938A-69B8FF8F91E6

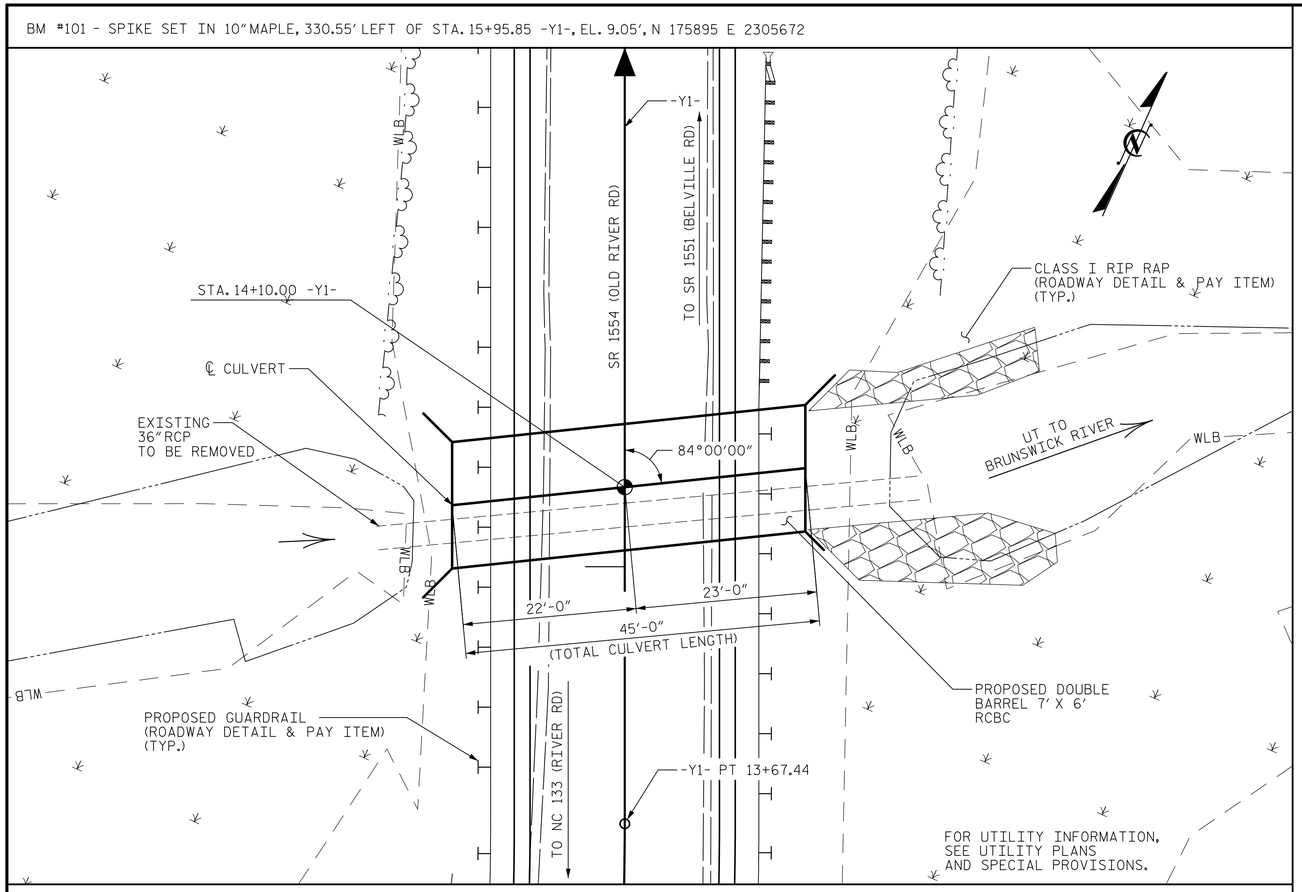

LOCATION SKETCH

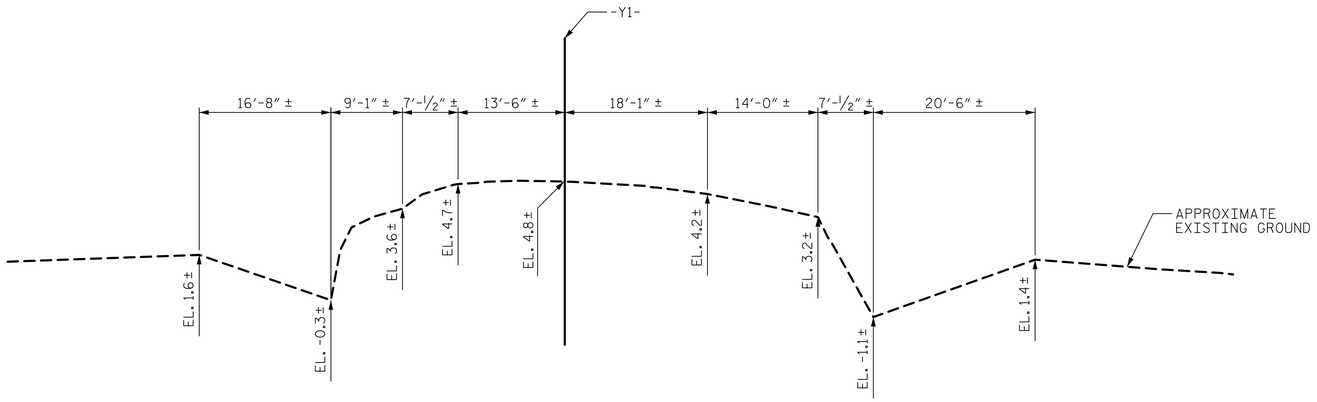

PROFILE ALONG ℄ CULVERT

NOTES

ASSUMED LIVE LOAD ---------- HL-93 OR ALTERNATE LOADING.

DESIGN FILL---------- 1.52' (MIN.), 1.97' (MAX.)

FOR OTHER DESIGN DATA AND NOTES SEE STANDARD NOTE SHEET.

FOR CONSTRUCTION SEQUENCE INFORMATION, SEE EROSION CONTROL PLANS.

FOR GUARDRAIL AT CULVERT, REFER TO STD. 862D01.

3"Ø WEEP HOLES INDICATED TO BE IN ACCORDANCE WITH THE SPECIFICATIONS.

CONCRETE IN CULVERTS TO BE POURED IN THE FOLLOWING ORDER:

STAGE I:
1. WING FOOTINGS AND FLOOR SLAB INCLUDING 4" OF STAGE I VERTICAL WALLS
2. THE REMAINING PORTIONS OF STAGE I WALLS AND WINGS FULL HEIGHT

STAGE II:
3. FLOOR SLAB INCLUDING 4" OF STAGE II VERTICAL WALL
4. THE REMAINING PORTION OF STAGE II WALL AND WINGS FULL HEIGHT
5. COMPLETE ROOF SLAB AND HEADWALL

THE RESIDENT ENGINEER SHALL CHECK THE LENGTH OF CULVERT BEFORE STAKING IT OUT TO MAKE CERTAIN THAT IT WILL PROPERLY TAKE CARE OF THE FILL.

DIMENSIONS FOR WING LAYOUT AS WELL AS ADDITIONAL REINFORCING STEEL EMBEDDED IN BARREL ARE SHOWN ON WING SHEET.

AT THE CONTRACTOR'S OPTION, HE MAY SPLICE THE VERTICAL REINFORCING STEEL IN THE INTERIOR FACE OF EXTERIOR WALL AND BOTH FACES OF INTERIOR WALLS ABOVE LOWER WALL CONSTRUCTION JOINT. THE SPLICE LENGTH SHALL BE AS PROVIDED IN THE SPLICE LENGTH CHART SHOWN ON THE PLANS. EXTRA WEIGHT OF STEEL DUE TO THE SPLICES SHALL BE PAID FOR BY THE CONTRACTOR.

DOWELS SHALL BE USED TO CONNECT THE CULVERT BOTTOM SLAB BETWEEN STAGES. FOR NOTE REGARDING SETTING OF DOWELS, SEE SHEET SN.

AT THE CONTRACTOR'S OPTION HE MAY SUBMIT, TO THE ENGINEER FOR APPROVAL, DESIGN AND DETAIL DRAWINGS FOR A PRECAST REINFORCED CONCRETE BOX CULVERT IN LIEU OF THE CAST-IN-PLACE CULVERT SHOWN ON THE PLANS. THE DESIGN SHALL PROVIDE THE SAME SIZE AND NUMBER OF BARRELS AS USED ON THE CAST-IN-PLACE DESIGN. FOR OPTIONAL PRECAST REINFORCED CONCRETE BOX CULVERT, SEE SPECIAL PROVISIONS.

FOR CULVERT DIVERSION DETAILS AND PAY ITEM, SEE EROSION CONTROL PLANS.

FOR ALTERNATIVE GUARDRAIL POST SPACING OVER CULVERT, REFER TO STD. 862D01.

FOR SUBMITTAL OF WORKING DRAWINGS, SEE SPECIAL PROVISIONS.

FOR FALSEWORK AND FORMWORK, SEE SPECIAL PROVISIONS.

FOR CRANE SAFETY, SEE SPECIAL PROVISIONS.

FOR GROUT FOR STRUCTURES, SEE SPECIAL PROVISIONS.

ROADWAY DATA

GRADE POINT ELEV. @ STATION 14+10 -Y1-..... = 7.39 FT.
BED ELEV. @ STATION 14+10 -Y1- ..... = 0.09 FT.
ROADWAY SLOPES ..... = 1.5:1 (LT.), 2:1 (RT.)

HYDRAULIC DATA

DESIGN DISCHARGE ..... = 370 CFS.
FREQUENCY OF DESIGN FLOOD ..... = 25 YR.
DESIGN HIGH WATER ELEVATION ..... = 5.4 FT.
DRAINAGE AREA ..... = 0.53 SQ. MI.
BASE DISCHARGE (Q100) ..... = 490 CFS.
BASE HIGH WATER ELEVATION ..... = 6.6 FT.

OVERTOPPING FLOOD DATA

OVERTOPPING DISCHARGE ..... = 593 CFS.
FREQUENCY OF OVERTOPPING FLOOD .. = 100+ YR.
OVERTOPPING FLOOD ELEVATION ..... = 7.1 FT.

✳NOTE: OVERTOPS ROADWAY @ STA. 12+89.00 -Y1-

TOTAL STRUCTURE QUANTITIES

CULVERT EXCAVATION	LUMP SUM	
FOUNDATION CONDITIONING MATERIAL		
STAGE I	36.0	TONS
STAGE II	27.5	TONS
TOTAL	63.5	TONS
CLASS A CONCRETE - STAGE I		
BARREL @ 0.54 CY/FT	24.3	C.Y.
WING ETC.	7.3	C.Y.
CLASS A CONCRETE - STAGE II		
BARREL @ 0.81 CY/FT	36.2	C.Y.
WING ETC.	7.4	C.Y.
TOTAL	75.2	C.Y.
REINFORCING STEEL - STAGE I		
BARREL	5,617	LBS.
WING ETC.	405	LBS.
REINFORCING STEEL - STAGE II		
BARREL	6,092	LBS.
WING ETC.	400	LBS.
TOTAL	12,514	LBS.

PROJECT NO. U-5914
BRUNSWICK COUNTY
STATION: 14+10.00 -Y1-

SHEET 1 OF 6

I HEREBY CERTIFY THESE PLANS ARE THE AS-BUILT PLANS

DOCUMENT NOT CONSIDERED FINAL UNLESS ALL SIGNATURES COMPLETED

AECOM
AECOM TECHNICAL SERVICES OF NC, INC.
701 CORPORATE CENTER DRIVE, SUITE 475
RALEIGH, NC 27607
(919) 854-6200 www.aecom.com
AECOM License No. F-0342

NORTH CAROLINA PROFESSIONAL SEAL 030474 ENGINEER JOHN C. MORRISON
Docusigned by: John C. Morrison A2FDE142C8274AB... 3/7/2023

STATE OF NORTH CAROLINA
DEPARTMENT OF TRANSPORTATION
RALEIGH

DOUBLE 7 FT X 6 FT CONCRETE BOX CULVERT 84°SKEW

REVISIONS						SHEET NO.
NO.	BY:	DATE:	NO.	BY:	DATE:	C1-01
1			3			TOTAL SHEETS
2			4			

DRAWN BY : M. CATER DATE : 01/2022
CHECKED BY : J.C. MORRISON DATE : 01/2022
DESIGNED BY : K. MUENCH DATE : 01/2022
DESIGN CHECKED BY : MORRISON DATE : 01/2022

DATE: 3/7/2023
TIME: 9:46:05 AM
USER: cafarm
DGN: pw:\\aecom-nc-pw.bentley.com:AECOM_USA_North_Carolina_Documents\60312233-U-5914 - NC 133\900-CAD 0\5\90_CADD_NCDOT_TIP\Structures\02 Drawings\40_001_U5914_10C_01-01.dgn

DocuSign Envelope ID: 3E14618D-32A1-47B5-938A-69B8FF8F91E6

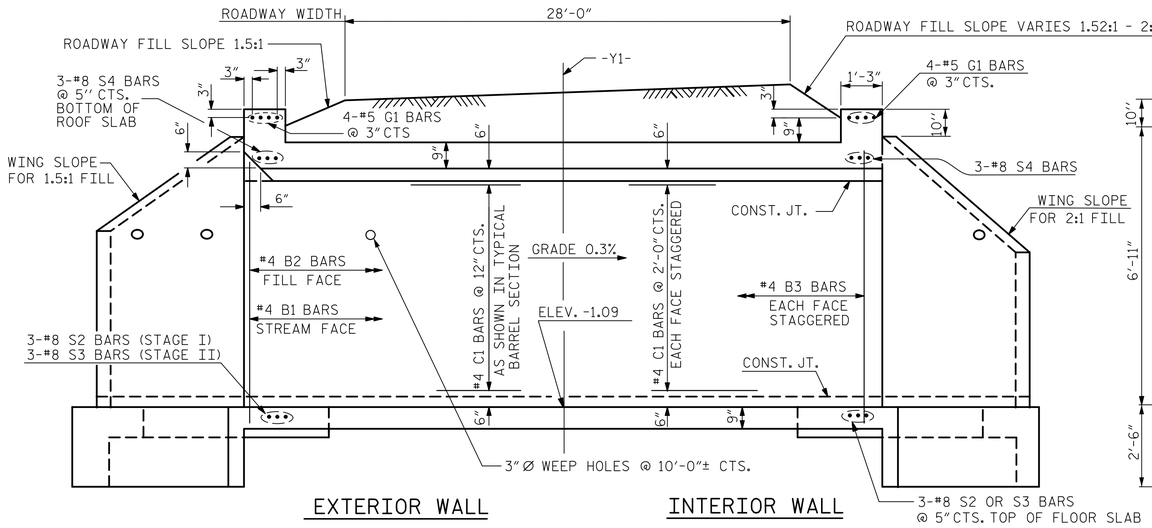

CULVERT SECTION NORMAL TO ROADWAY

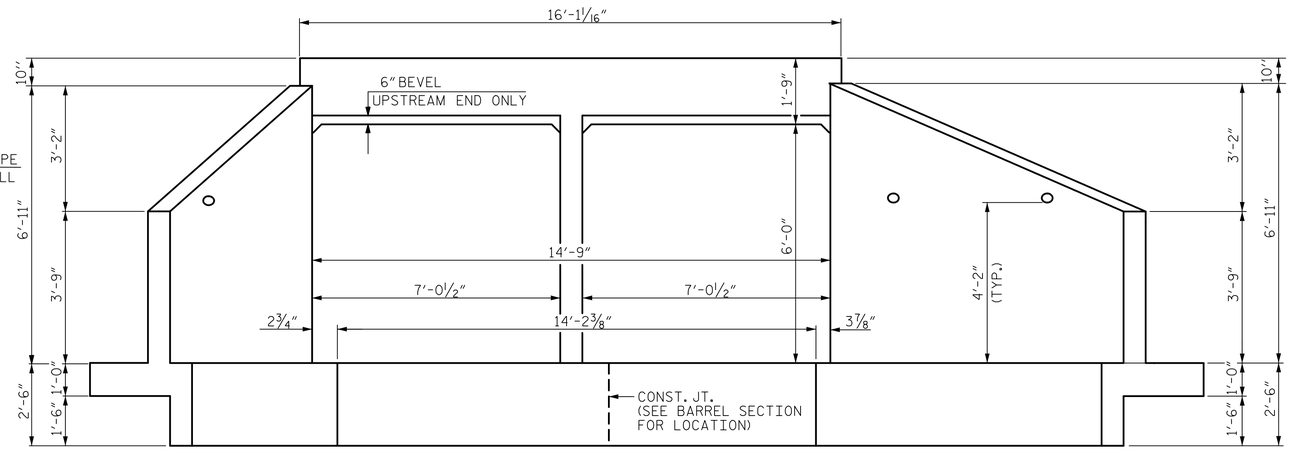

INLET END ELEVATION NORMAL TO SKEW

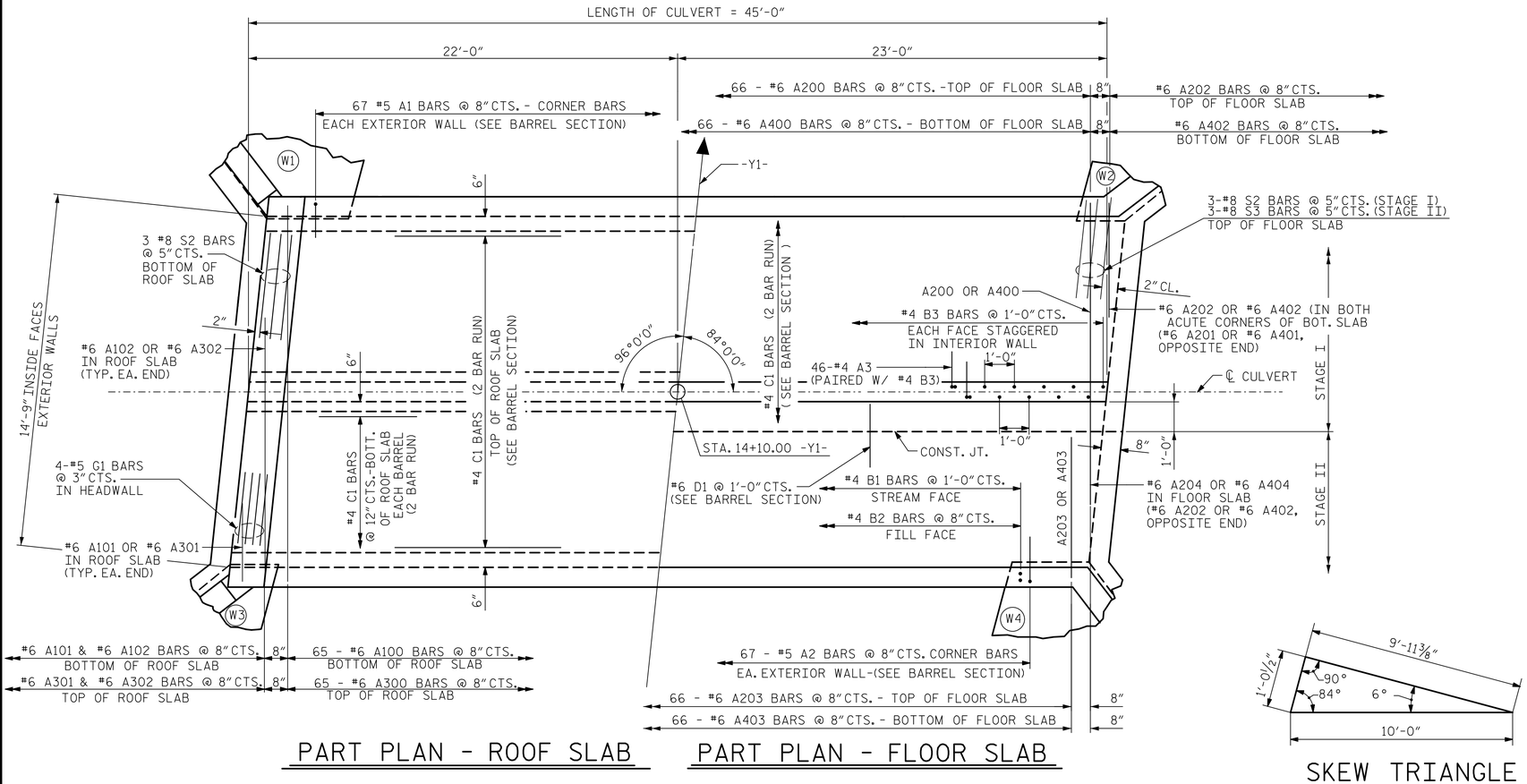

PART PLAN - ROOF SLAB

PART PLAN - FLOOR SLAB

SKEW TRIANGLE

DRAWN BY : M. CATER	DATE : 02/2022		
CHECKED BY : J.C. MORRISON	DATE : 02/2022		
DESIGNED BY : K. MUENCH	DATE : 02/2022		
DESIGN CHECKED BY : MORRISON	DATE : 02/2022		

DOCUMENT NOT CONSIDERED FINAL UNLESS ALL SIGNATURES COMPLETED

AECOM
AECOM TECHNICAL SERVICES OF NC, INC.
701 CORPORATE CENTER DRIVE, SUITE 475
RALEIGH, NC 27607
(919) 854-6200 www.aecom.com
AECOM License No. F-0342

NORTH CAROLINA PROFESSIONAL SEAL 030474 ENGINEER JOHN C. MORRISON
DocuSigned by: John C. Morrison A2FDE142C82F4AB... 3/7/2023

STATE OF NORTH CAROLINA
DEPARTMENT OF TRANSPORTATION
RALEIGH

DOUBLE 7 FT X 6 FT CONCRETE BOX CULVERT 84°SKEW

PROJECT NO. U-5914
BRUNSWICK COUNTY
STATION: 14+10.00 -Y1-

REVISIONS						SHEET NO.
NO.	BY:	DATE:	NO.	BY:	DATE:	C1-02
1			3			TOTAL SHEETS
2			4			

SHEET 2 OF 6

DATE: 3/7/2023
TIME: 9:46:15 AM

USER: cotterm
DGN: pw:\\aecom-nc-pw.bentley.com:AECOM_USA_North_Carolina_Documents\60512233-U-5914 - NC 133\900-CAD 61\900_CADD_NCDOT_T1\PSStructures\02 Drawings\401_003_U5914_SEC_C1-02.dgn

DocuSign Envelope ID: 3E14618D-32A1-47B5-938A-69B8FF8F91E6

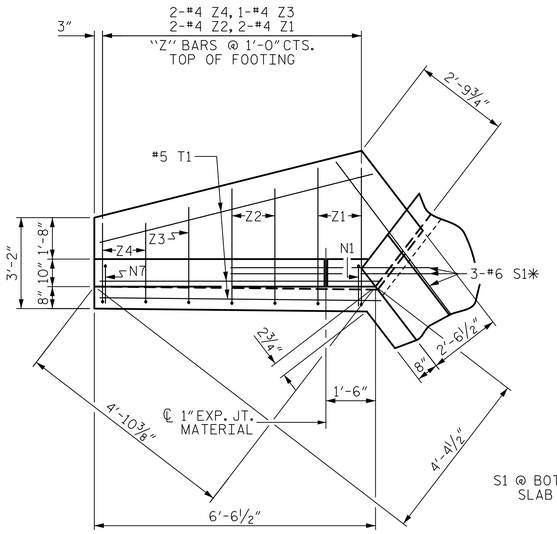

PLAN W1

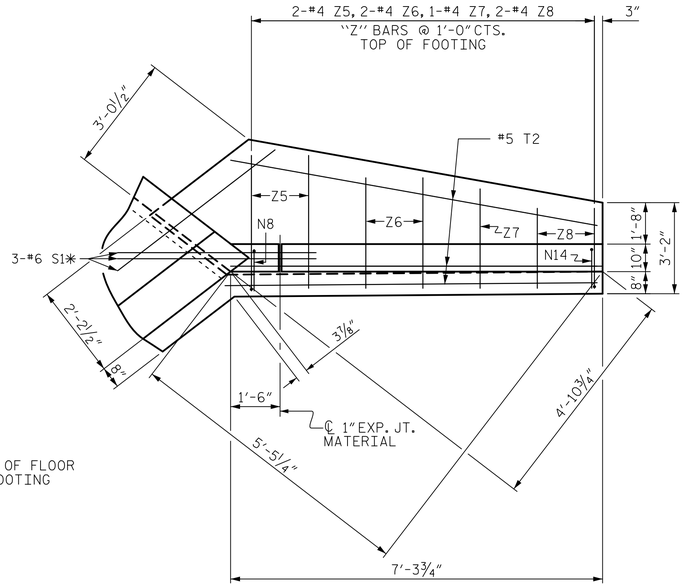

PLAN W3

S1 @ BOTTOM OF FLOOR SLAB & FOOTING

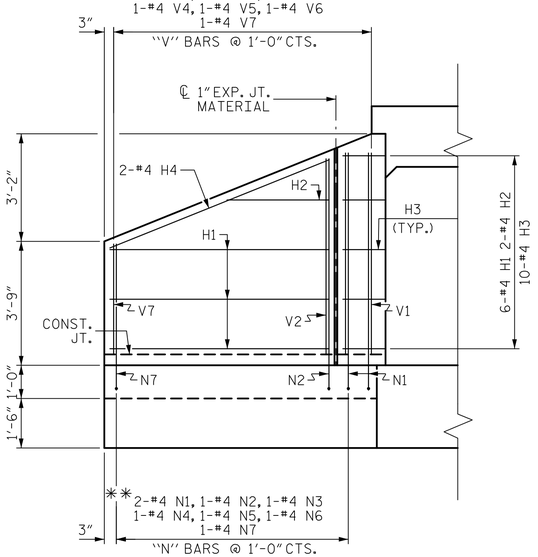

ELEVATION W1

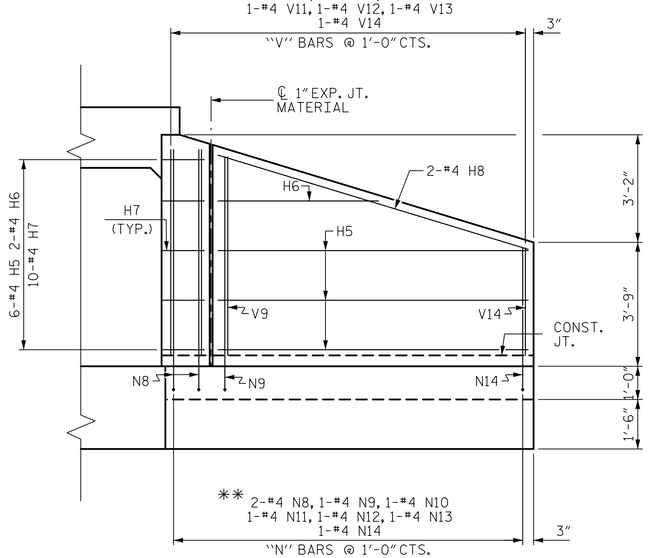

ELEVATION W3

**: #4 BARS "N" PAIRED WITH #4 BARS "V"

NOTE:
A 3 FOOT STRIP OF FILTER FABRIC SHALL BE ATTACHED TO THE FILL FACE OF THE WING COVERING THE ENTIRE LENGTH OF THE EXPANSION JOINT

BAR TYPES

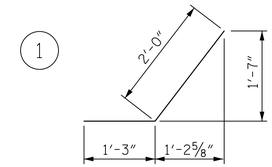

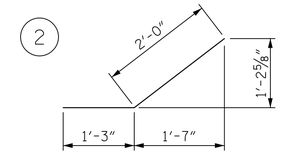

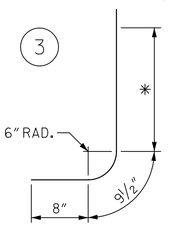

N1	6-7½"
N2	5'-2½"
N3	5'-8½"
N4	5'-2½"
N5	4'-9½"
N6	4'-3½"
N7	3'-9½"
N8	6'-7½"
N9	6'-4½"
N10	5'-10½"
N11	5'-4½"
N12	4'-9½"
N13	4'-3½"
N14	3'-9½"

Z1	4'-3"	6"
Z2	3'-6"	6"
Z3	2'-11"	6"
Z4	2'-5"	6"
Z5	4'-1"	6"
Z6	3'-7"	6"
Z7	3'-0"	6"
Z8	2'-5"	6"

4 HK.

ALL BAR DIMENSIONS ARE OUT TO OUT.

REINFORCING STEEL		
FOR W1 & W3 WINGS	359	LBS
CLASS A CONCRETE		
W1 WING	2.3	CY
W3 WING	2.6	CY
1 HEADWALL	0.8	CY
1 END CURTAIN WALL	1.0	CY
TOTAL	6.7	CY

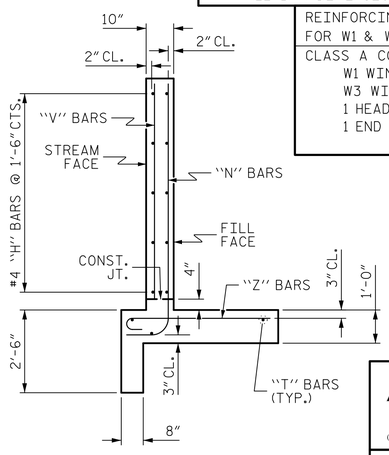

TYPICAL WING SECTION

BILL OF MATERIAL

BAR	NO.	SIZE	TYPE	LENGTH	WEIGHT
H1	6	#4	STR	4'-7"	18
H2	2	#4	STR	2'-1"	3
H3	10	#4	1	3'-3"	22
H4	2	#4	STR	5'-2"	7
H5	6	#4	STR	5'-5"	22
H6	2	#4	STR	2'-7"	3
H7	10	#4	2	3'-3"	22
H8	2	#4	STR	6'-0"	8
N1	2	#4	3	8'-1"	11
N2	1	#4	3	7'-8"	5
N3	1	#4	3	7'-2"	5
N4	1	#4	3	6'-8"	4
N5	1	#4	3	6'-3"	4
N6	1	#4	3	5'-9"	4
N7	1	#4	3	5'-3"	4
N8	2	#4	3	8'-1"	11
N9	1	#4	3	7'-10"	5
N10	1	#4	3	7'-4"	5
N11	1	#4	3	6'-10"	4
N12	1	#4	3	6'-3"	4
N13	1	#4	3	5'-9"	4
N14	1	#4	3	5'-3"	4
S1	12	#6	STR	6'-0"	54
T1	3	#5	STR	6'-0"	19
T2	3	#5	STR	6'-10"	21
V1	2	#4	STR	6'-0"	8
V2	1	#4	STR	5'-7"	4
V3	1	#4	STR	5'-1"	3
V4	1	#4	STR	4'-7"	3
V5	1	#4	STR	4'-2"	3
V6	1	#4	STR	3'-8"	2
V7	1	#4	STR	3'-2"	2
V8	2	#4	STR	6'-0"	8
V9	1	#4	STR	5'-9"	4
V10	1	#4	STR	5'-3"	3
V11	1	#4	STR	4'-9"	3
V12	1	#4	STR	4'-2"	3
V13	1	#4	STR	3'-8"	2
V14	1	#4	STR	3'-2"	2
Z1	2	#4	4	4'-2"	6
Z2	2	#4	4	3'-10"	5
Z3	1	#4	4	3'-8"	2
Z4	2	#4	4	3'-5"	5
Z5	2	#4	4	4'-2"	6
Z6	2	#4	4	3'-10"	5
Z7	1	#4	4	3'-8"	2
Z8	2	#4	4	3'-4"	4

PROJECT NO. U-5914
BRUNSWICK COUNTY
STATION: 14+10.00 -Y1-

SHEET 3 OF 6

AECOM
AECOM TECHNICAL SERVICES OF NC, INC.
701 CORPORATE CENTER DRIVE, SUITE 475
RALEIGH, NC 27607
(919) 854-6200 www.aecom.com
AECOM License No. F-0342

NORTH CAROLINA PROFESSIONAL SEAL 030474 ENGINEER JOHN C. MORRISON
DocuSigned by: John C. Morrison A2FDE142CB2F4AB... 3/7/2023

STATE OF NORTH CAROLINA
DEPARTMENT OF TRANSPORTATION
RALEIGH

STANDARD WINGS FOR CONCRETE BOX CULVERT

H = 6'-0" SLOPE = 1.5:1
84° SKEW

REVISIONS						SHEET NO.
NO.	BY:	DATE:	NO.	BY:	DATE:	C1-03
1			3			TOTAL SHEETS
2			4			

DRAWN BY : M. CATER DATE : 02/2022
CHECKED BY : J.C. MORRISON DATE : 02/2022
DESIGNED BY : K. MUENCH DATE : 02/2022
DESIGN CHECKED BY : MORRISON DATE : 02/2022

DOCUMENT NOT CONSIDERED FINAL UNLESS ALL SIGNATURES COMPLETED

DATE: 3/7/2023
TIME: 9:46:23 AM
USER: cotterm
DGN: (w:\\aecom-nc-pw.bentley.com#AECOM_USA_North_Carolina\Documents\60512233-U-5914 - NC 133/900-CAD (i)\900_CADD_NCDOT_TIP\Structures\02 Drawings\40_005_U5914_CWI_C1-03.dgn

DocuSign Envelope ID: 3E14618D-32A1-47B5-938A-69B8FF8F91E6

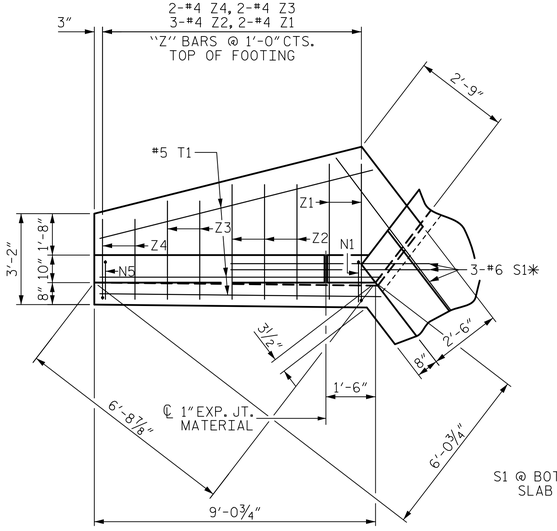

PLAN W4

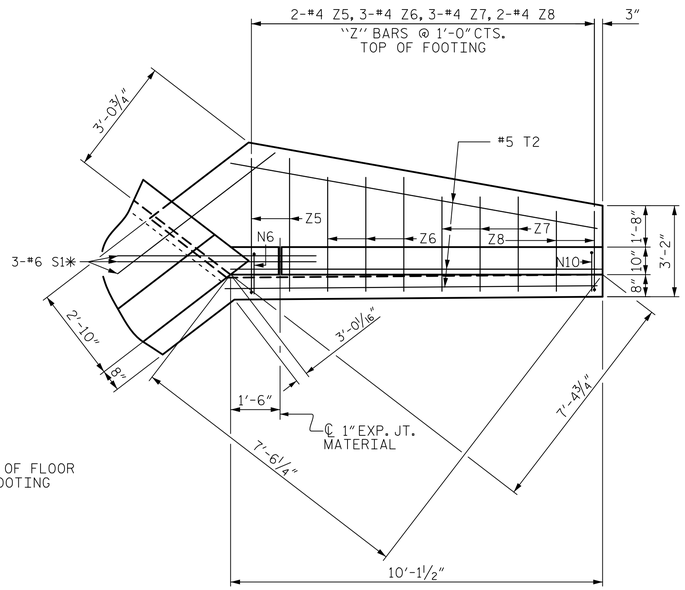

PLAN W2

S1 @ BOTTOM OF FLOOR SLAB & FOOTING

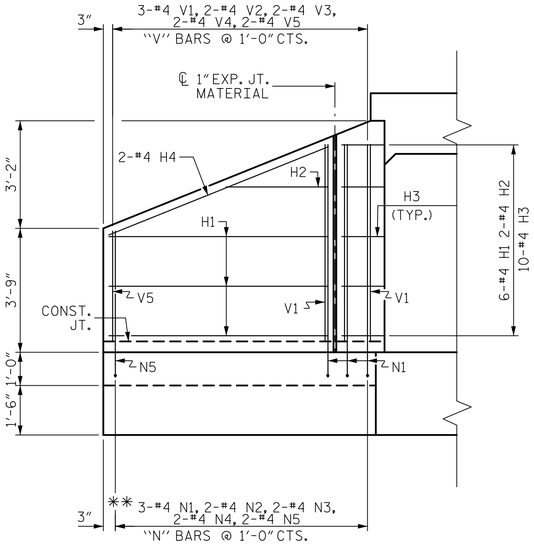

ELEVATION W4

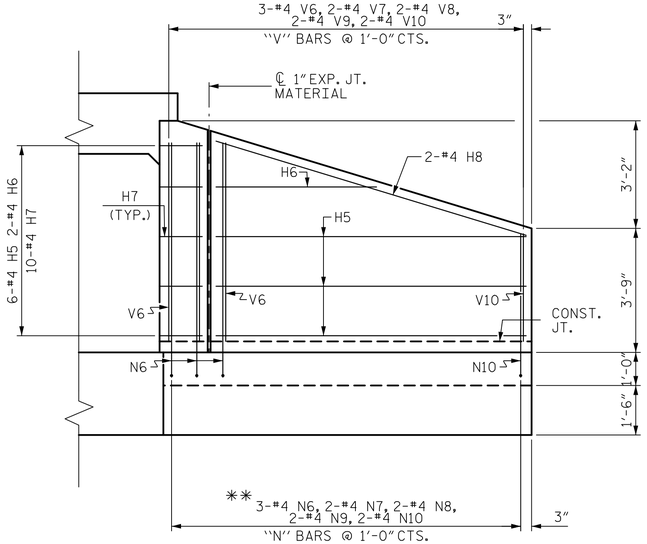

ELEVATION W2

**: #4 BARS "N" PAIRED WITH #4 BARS "V"

NOTE:
A 3 FOOT STRIP OF FILTER FABRIC SHALL BE ATTACHED TO THE FILL FACE OF THE WING COVERING THE ENTIRE LENGTH OF THE EXPANSION JOINT

BAR TYPES

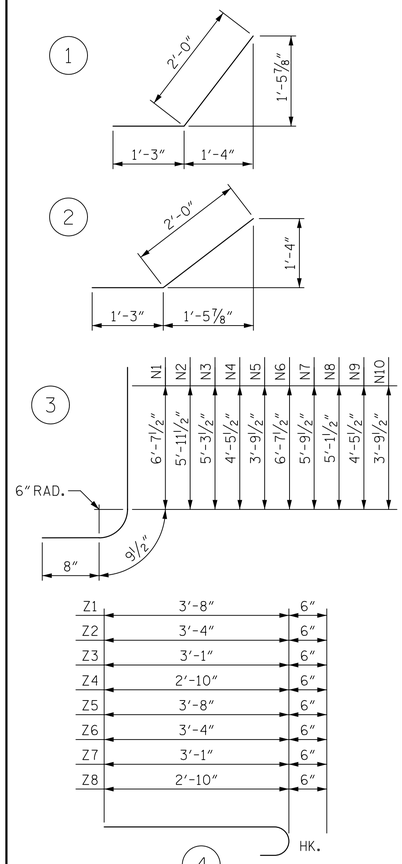

ALL BAR DIMENSIONS ARE OUT TO OUT.

BILL OF MATERIAL

BAR	NO.	SIZE	TYPE	LENGTH	WEIGHT
H1	6	#4	STR	7'-1"	28
H2	2	#4	STR	3'-6"	5
H3	10	#4	1	3'-3"	22
H4	2	#4	STR	7'-7"	10
H5	6	#4	STR	8'-2"	33
H6	2	#4	STR	4'-2"	6
H7	10	#4	2	3'-3"	22
H8	2	#4	STR	8'-7"	11
N1	2	#4	3	8'-1"	11
N2	2	#4	3	7'-5"	10
N3	2	#4	3	6'-9"	9
N4	2	#4	3	5'-11"	8
N5	2	#4	3	5'-3"	7
N6	2	#4	3	8'-1"	11
N7	2	#4	3	7'-3"	10
N8	2	#4	3	6'-7"	9
N9	2	#4	3	5'-11"	8
N10	2	#4	3	5'-3"	7
S1	12	#6	STR	6'-0"	54
T1	3	#5	STR	8'-9"	27
T2	3	#5	STR	9'-8"	30
V1	2	#4	STR	6'-0"	8
V2	2	#4	STR	5'-4"	7
V3	2	#4	STR	4'-8"	6
V4	2	#4	STR	3'-10"	5
V5	2	#4	STR	3'-2"	4
V6	2	#4	STR	6'-0"	8
V7	2	#4	STR	5'-2"	7
V8	2	#4	STR	4'-6"	6
V9	2	#4	STR	3'-10"	5
V10	2	#4	STR	3'-2"	4
Z1	2	#4	4	4'-2"	6
Z2	3	#4	4	3'-10"	8
Z3	2	#4	4	3'-7"	5
Z4	2	#4	4	3'-4"	4
Z5	3	#4	4	4'-2"	6
Z6	3	#4	4	3'-10"	8
Z7	3	#4	4	3'-7"	7
Z8	2	#4	4	3'-4"	4

REINFORCING STEEL FOR W2 & W4 WINGS	446	LBS
CLASS A CONCRETE		
W2 WING	3.5	CY
W4 WING	3.2	CY
1 HEADWALL	0.8	CY
1 END CURTAIN WALL	1.0	CY
TOTAL	8.5	CY

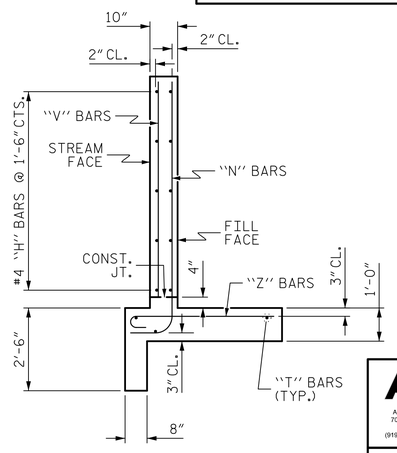

TYPICAL WING SECTION

PROJECT NO. U-5914
BRUNSWICK COUNTY
STATION: 14+10.00 -Y1-

SHEET 4 OF 6

DRAWN BY : M. CATER DATE : 02/2022
CHECKED BY : J.C. MORRISON DATE : 02/2022
DESIGNED BY : K. MUENCH DATE : 02/2022
DESIGN CHECKED BY : MORRISON DATE : 02/2022

DOCUMENT NOT CONSIDERED FINAL UNLESS ALL SIGNATURES COMPLETED

AECOM
AECOM TECHNICAL SERVICES OF NC, INC.
701 CORPORATE CENTER DRIVE, SUITE 475
RALEIGH, NC 27607
(919) 854-6200 www.aecom.com
AECOM License No. F-0342

NORTH CAROLINA PROFESSIONAL SEAL 030474 ENGINEER JOHN C. MORRISON
DocuSigned by: John C. Morrison A2FDE142CB2F4AB... 3/7/2023

STATE OF NORTH CAROLINA
DEPARTMENT OF TRANSPORTATION
RALEIGH

STANDARD WINGS FOR CONCRETE BOX CULVERT

H = 6'-0" SLOPE = 2:1
84° SKEW

REVISIONS						SHEET NO.
NO.	BY:	DATE:	NO.	BY:	DATE:	C1-04
1			3			TOTAL SHEETS
2			4			

USER: cofarm
DGN: pw:\\aecom-nc-pw.bentley.com:AECOM_USA_North_Carolina_Documents\60512233-U-5914 - NC 133\900-CAD (S)\900_CADD\0_NCDOT_TIP\Structures\02 Drawings\40_DOT_U5914_DW2_C1-04.dgn

DocuSign Envelope ID: 3E14618D-32A1-47B5-938A-69B8FF8F91E6

STAGE I QUANTITIES

CULVERT EXCAVATION	LUMP SUM
FOUNDATION CONDITIONING MATERIAL	36.0 TONS
CLASS A CONCRETE	
BARREL @ 0.54 CY/FT	24.3 C.Y.
WINGS, ETC.	7.3 C.Y.
TOTAL	31.6 C.Y.
REINFORCED STEEL	
BARREL	5,617 LBS.
WINGS, ETC.	405 LBS.
TOTAL	6,022 LBS.

STAGE II QUANTITIES

CULVERT EXCAVATION	LUMP SUM
FOUNDATION CONDITIONING MATERIAL	27.5 TONS
CLASS A CONCRETE	
BARREL @ 0.81 CY/FT	36.2 C.Y.
WINGS, ETC.	7.4 C.Y.
TOTAL	43.6 C.Y.
REINFORCED STEEL	
BARREL	6,092 LBS.
WINGS, ETC.	400 LBS.
TOTAL	6,492 LBS.

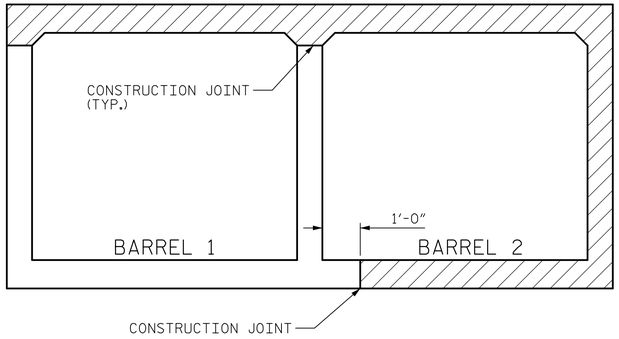

CONSTRUCTION SEQUENCE

(LOOKING DOWNSTREAM)

BAR TYPE

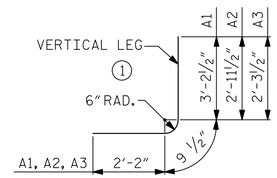

ALL DIMENSIONS ARE OUT TO OUT.

DENOTES STAGE I CONSTRUCTION

DENOTES STAGE II CONSTRUCTION

NOTE:
FOR ADDITIONAL STAGING INFORMATION, REFER TO EROSION CONTROL PLANS SHEET

BILL OF MATERIAL

STAGE I						STAGE II					
BAR	NO.	SIZE	TYPE	LENGTH	WEIGHT	BAR	NO.	SIZE	TYPE	LENGTH	WEIGHT
A1	67	#5	1	6'-2"	431	A1	67	#5	1	5'-6"	384
A2	67	#5	1	5'-11"	413	A2	67	#5	1	4'-10"	338
A3	46	#4	1	5'-3"	161						
						A100	65	#6	STR.	15'-8"	1,530
A200	66	#6	STR.	9'-0"	892	A101	2	#6	STR.	11'-0"	33
A201	1	#6	STR.	4'-4"	7	A102	2	#6	STR.	4'-8"	14
A202	1	#6	STR.	4'-8"	7						
						A202	1	#6	STR.	4'-8"	7
A400	66	#6	STR.	9'-0"	892	A203	66	#6	STR.	6'-4"	628
A401	1	#6	STR.	4'-4"	7	A204	1	#6	STR.	1'-8"	3
A402	1	#6	STR.	4'-8"	7						
						A300	65	#6	STR.	15'-8"	1,530
						A301	2	#6	STR.	11'-0"	33
						A302	2	#6	STR.	4'-8"	14
						A402	1	#6	STR.	4'-8"	7
						A403	66	#6	STR.	6'-4"	628
						A404	1	#6	STR.	1'-8"	3
B1	46	#4	STR.	7'-1"	218	B1	46	#4	STR.	7'-1"	218
B2	67	#4	STR.	5'-4"	239	B2	67	#4	STR.	5'-4"	239
B3	46	#4	STR.	7'-1"	218						
						G1	8	#5	STR.	15'-8"	131
C1	116	#4	STR.	23'-4"	1,808						
						S3	6	#8	STR.	6'-4"	101
S2	6	#8	STR.	9'-0"	144	S4	6	#8	STR.	15'-8"	251
D1	46	#6	STR.	2'-6"	173						
REINFORCING STEEL LBS. 5,617						REINFORCING STEEL LBS. 6,092					

NOTE: S1 BARS ARE INCLUDED WITH THE BILL OF MATERIAL FOR WINGS

BACKFILL CULVERT WITH NATIVE MATERIAL.

NATIVE MATERIAL SPECIFICATIONS:
NATIVE MATERIAL CONSISTS OF MATERIAL THAT IS EXCAVATED FROM THE STREAM BED OR FLOODPLAIN AT THE PROJECT SITE DURING CONSTRUCTION. ONLY MATERIAL THAT IS EXCAVATED FROM THE STREAM BED MAY BE USED TO LINE THE CULVERT BARRELS. NATIVE MATERIAL IS SUBJECT TO APPROVAL BY THE ENGINEER AND MAY BE SUBJECT TO PERMIT CONDITIONS.

NOTE:
FOR ADDITIONAL "A" BARS IN ROOF OR FLOOR SLAB, SEE "PART PLAN"

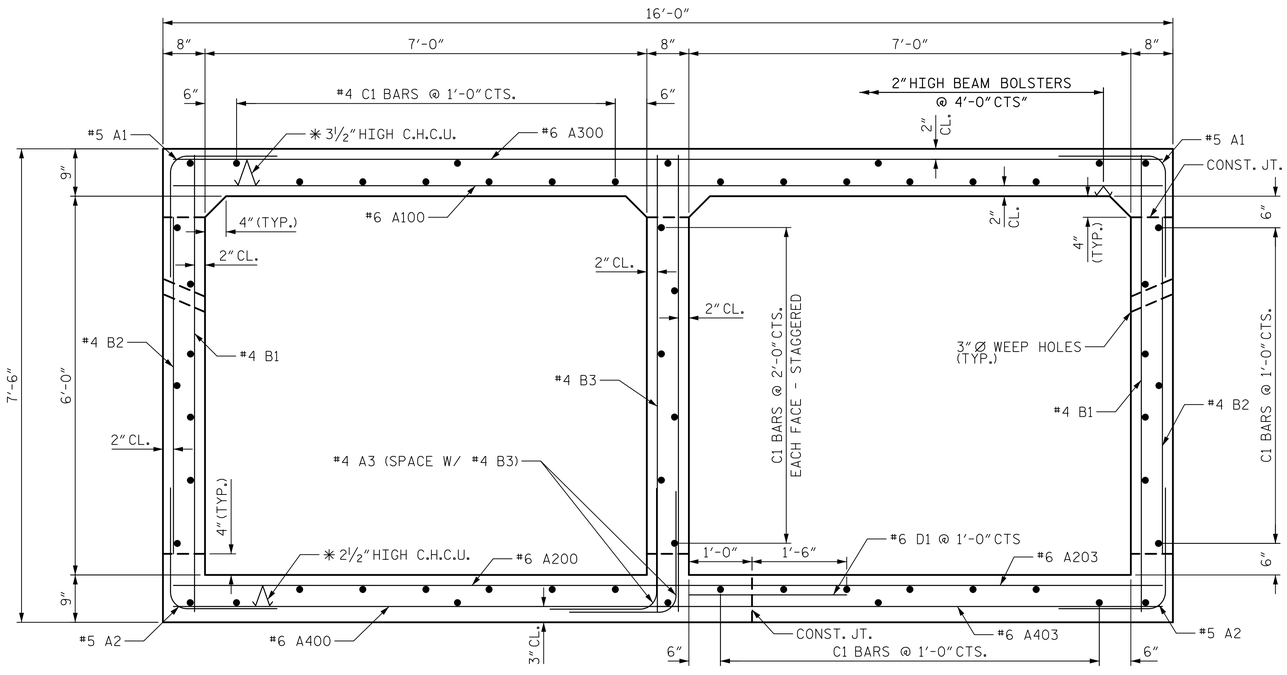

RIGHT ANGLE SECTION OF BARREL

THERE ARE 58 "C" BARS IN SECTION OF BARREL.
* ALL CONTINUOUS HIGH CHAIR UPPER (C.H.C.U.) @ 3'-0" CTS.

SPLICE LENGTH CHART

BAR	SIZE	SPLICE LENGTH
"B"	#4	1'-5"
C1	#4	1'-11"

PROJECT NO. U-5914

BRUNSWICK COUNTY

STATION: 14+10.00 -Y1-

SHEET 5 OF 6

AECOM
AECOM TECHNICAL SERVICES OF NC, INC.
701 CORPORATE CENTER DRIVE, SUITE 475
RALEIGH, NC 27607
(919) 854-6200 www.aecom.com
AECOM License No. F-0342

NORTH CAROLINA PROFESSIONAL SEAL 030474 ENGINEER JOHN C. MORRISON
DocuSigned by: John C. Morrison A2FDE142C82F4AB... 3/7/2023

DOCUMENT NOT CONSIDERED FINAL UNLESS ALL SIGNATURES COMPLETED

STATE OF NORTH CAROLINA
DEPARTMENT OF TRANSPORTATION
RALEIGH

DOUBLE 7 FT X 6 FT CONCRETE BOX CULVERT 84°SKEW

REVISIONS						SHEET NO.
NO.	BY:	DATE:	NO.	BY:	DATE:	C1-05
1			3			TOTAL SHEETS
2			4			

DRAWN BY :	M. CATER	DATE :	01/22
CHECKED BY :	J.C. MORRISON	DATE :	01/22
DESIGNED BY :	K. MUENCH	DATE :	01/22
DESIGN CHECKED BY :	MORRISON	DATE :	01/22

DATE: 3/7/2023
TIME: 9:16:41 AM
USER: cotterm
DGN: pw:\\aecom-nc-pw.bentley.com:AECOM_USA_North_Carolina\Documents\60512333-u-5914 - NC 133\900-CAD 01\900_CADD_NCDOT_TIP\Structures\02 Drawings\40_09_U5914_BOM_C1-05.dgn

DocuSign Envelope ID: 3E14618D-32A1-47B5-938A-69B8FF8F91E6

LOAD AND RESISTANCE FACTOR RATING (LRFR) SUMMARY FOR REINFORCED CONCRETE BOX CULVERTS

LEVEL		VEHICLE	WEIGHT (W) (TONS)	CONTROLLING LOAD RATING (#)	MINIMUM RATING FACTORS (RF)	TONS = W × RF	STRENGTH I LIMIT STATE									COMMENT NUMBER
								MOMENT				SHEAR				
							LIVE-LOAD FACTORS (γ_{LL})	RATING FACTOR	BOX NO.	ELEMENT TYPE	DISTANCE FROM LEFT END OF ELEMENT (ft)	RATING FACTOR	BOX NO.	ELEMENT TYPE	DISTANCE FROM LEFT END OF ELEMENT (ft)	
DESIGN LOAD RATING		HL-93 (INVENTORY)	N/A	1	1.11	--	1.75	1.66	1	TOP SLAB	4.17	1.11	1	TOP SLAB	1.54	
		HL-93 (OPERATING)	N/A		1.44	--	1.35	2.15	1	TOP SLAB	4.17	1.44	1	TOP SLAB	1.54	
		HS-20 (INVENTORY)	36.000	2	1.11	51.84	1.75	1.66	1	TOP SLAB	4.17	1.11	1	TOP SLAB	1.54	
		HS-20 (OPERATING)	36.000		1.44	51.84	1.35	2.15	1	TOP SLAB	4.17	1.44	1	TOP SLAB	1.54	
LEGAL LOAD RATING	SINGLE VEHICLE (SV)	SNSH	13.500		2.11	28.49	1.40	2.53	1	TOP SLAB	4.17	2.11	1	TOP SLAB	1.54	
		SNGARBS2	20.000		1.92	38.40	1.40	2.37	1	TOP SLAB	4.17	1.92	1	TOP SLAB	1.54	
		SNAGRIS2	22.000		2.11	46.42	1.40	2.53	1	TOP SLAB	4.17	2.11	1	TOP SLAB	1.54	
		SNCOTTS3	27.250	3	1.23	33.52	1.40	2.23	1	TOP SLAB	4.17	1.23	1	TOP SLAB	6.13	
		SNAGGRS4	34.925		1.67	58.32	1.40	2.47	1	BOTTOM SLAB	6.13	1.67	1	TOP SLAB	1.54	
		SNS5A	35.550		1.50	53.33	1.40	2.38	1	BOTTOM SLAB	6.13	1.50	1	TOP SLAB	6.13	
		SNS6A	39.950		1.49	59.53	1.40	2.24	1	BOTTOM SLAB	6.13	1.49	1	TOP SLAB	6.13	
		SNS7B	42.000		1.51	63.42	1.40	2.24	1	BOTTOM SLAB	6.13	1.51	1	TOP SLAB	6.13	
	TRUCK TRACTOR SEMI-TRAILER (TTST)	TNAGRIT3	33.000		2.07	68.31	1.40	2.53	1	TOP SLAB	4.17	2.07	1	TOP SLAB	1.54	
		TNT4A	33.075		1.58	52.26	1.40	2.36	1	BOTTOM SLAB	6.13	1.58	1	TOP SLAB	6.13	
		TNT6A	41.600		1.51	62.82	1.40	2.42	1	BOTTOM SLAB	6.13	1.51	1	TOP SLAB	6.13	
		TNT7A	42.000		1.54	64.68	1.40	2.39	1	BOTTOM SLAB	6.13	1.54	1	TOP SLAB	6.13	
		TNT7B	42.000		1.49	62.58	1.40	2.25	1	BOTTOM SLAB	6.13	1.49	1	TOP SLAB	6.13	
		TNAGRIT4	43.000		1.58	67.94	1.40	2.36	1	BOTTOM SLAB	6.13	1.58	1	TOP SLAB	6.13	
		TNAGT5A	45.000		1.53	68.85	1.40	2.04	1	BOTTOM SLAB	6.13	1.53	1	TOP SLAB	6.13	
		TNAGT5B	45.000		1.52	68.40	1.40	2.07	1	BOTTOM SLAB	6.13	1.52	1	TOP SLAB	6.13	

LOAD FACTORS:

DESIGN LOAD RATING FACTORS

LOAD TYPE	MAX FACTOR	MIN FACTOR
DC	1.25	0.90
DW	1.50	0.65
EV	1.30	0.90
EH	1.35	0.90
ES	1.50	0.75
LS	1.75	--
WA	1.00	--

NOTE:

RATING FACTORS ARE BASED ON THE STRENGTH I LIMIT STATE.

(#) CONTROLLING LOAD RATING

(1) DESIGN LOAD RATING (HL-93)

(2) DESIGN LOAD RATING (HS-20)

(3) LEGAL LOAD RATING **

** SEE CHART FOR VEHICLE TYPE

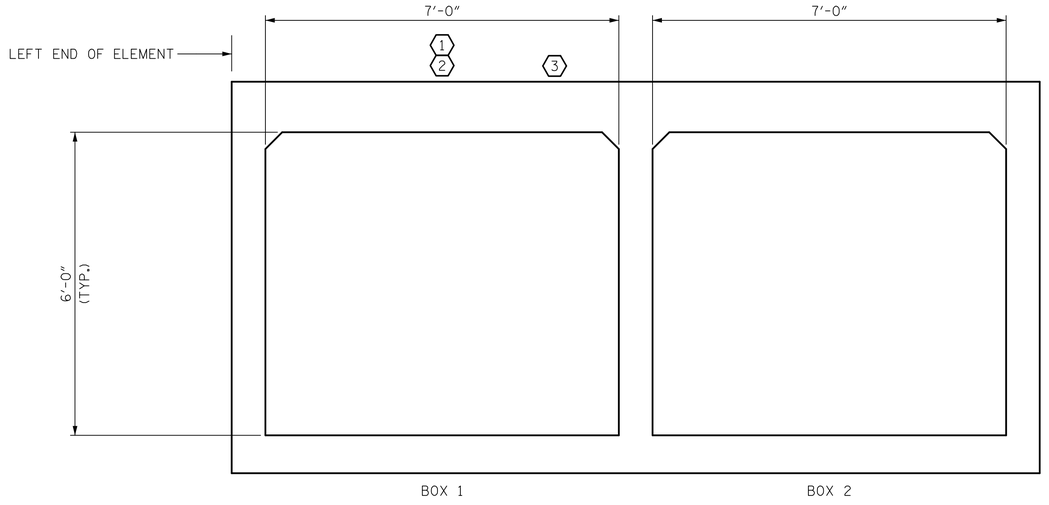

LRFR SUMMARY

(LOOKING DOWNSTREAM)

PROJECT NO. U-5914

BRUNSWICK COUNTY

STATION: 14+10.00 -Y1-

SHEET 6 OF 6

DRAWN BY : M. CATER DATE : 01/22
CHECKED BY : J.C. MORRISON DATE : 01/22
DESIGNED BY : K. MUENCH DATE : 01/22
DESIGN CHECKED BY : MORRISON DATE : 01/22

DOCUMENT NOT CONSIDERED FINAL UNLESS ALL SIGNATURES COMPLETED

AECOM
AECOM TECHNICAL SERVICES OF NC, INC.
701 CORPORATE CENTER DRIVE, SUITE 475
RALEIGH, NC 27607
(919) 854-6200 www.aecom.com
AECOM License No. F-0342

NORTH CAROLINA PROFESSIONAL SEAL 030474 ENGINEER JOHN C. MORRISON

Docusigned by: John C. Morrison A2FDE142CB2F4AB... 3/7/2023

STATE OF NORTH CAROLINA
DEPARTMENT OF TRANSPORTATION
RALEIGH

LRFR SUMMARY FOR REINFORCED CONCRETE BOX CULVERTS

REVISIONS						SHEET NO.
NO.	BY:	DATE:	NO.	BY:	DATE:	C1-06
1			3			TOTAL SHEETS
2			4			

USER: cahrm
DGN: pw:\\aecom-nsi-pw.bentley.com:AECOM_USA_North_Carolina\Documents\60512233-U-5914 - NC 133\900-CAD 01\90_CADD_NCDOT_TIP\Structures\02 Drawings\40_Dll_U5914_LRFR_C1-06.dgn
DATE: 3/7/2023
TIME: 9:16:51 AM

DocuSign Envelope ID: 3E14618D-32A1-47B5-938A-69B8FF8F91E6

STANDARD NOTES

DESIGN DATA:

SPECIFICATIONS	A.A.S.H.T.O. (CURRENT)
LIVE LOAD	SEE PLANS
IMPACT ALLOWANCE	SEE A.A.S.H.T.O.
STRESS IN EXTREME FIBER OF	
STRUCTURAL STEEL - AASHTO M270 GRADE 36	20,000 LBS. PER SQ. IN.
- AASHTO M270 GRADE 50W	27,000 LBS. PER SQ. IN.
- AASHTO M270 GRADE 50	27,000 LBS. PER SQ. IN.
REINFORCING STEEL IN TENSION	
GRADE 60	24,000 LBS. PER SQ. IN.
CONCRETE IN COMPRESSION	1,200 LBS. PER SQ. IN.
CONCRETE IN SHEAR	SEE A.A.S.H.T.O.
STRUCTURAL TIMBER - TREATED OR UNTREATED EXTREME FIBER STRESS	1,800 LBS. PER SQ. IN.
COMPRESSION PERPENDICULAR TO GRAIN OF TIMBER	375 LBS. PER SQ. IN.
EQUIVALENT FLUID PRESSURE OF EARTH	30 LBS. PER CU. FT. (MINIMUM)

MATERIAL AND WORKMANSHIP:

EXCEPT AS MAY OTHERWISE BE SPECIFIED ON PLANS OR IN THE SPECIAL PROVISIONS, ALL MATERIAL AND WORKMANSHIP SHALL BE IN ACCORDANCE WITH THE 2012 "STANDARD SPECIFICATIONS FOR ROADS AND STRUCTURES" OF THE N. C. DEPARTMENT OF TRANSPORTATION.

STEEL SHEET PILING FOR PERMANENT OR TEMPORARY APPLICATIONS SHALL BE HOT ROLLED.

CONCRETE:

UNLESS OTHERWISE REQUIRED ON PLANS, CLASS A CONCRETE SHALL BE USED FOR ALL PORTIONS OF ALL STRUCTURES WITH THE EXCEPTION THAT: CLASS AA CONCRETE SHALL BE USED IN BRIDGE SUPERSTRUCTURES, ABUTMENT BACKWALLS, AND APPROACH SLABS; AND CLASS B CONCRETE SHALL BE USED FOR SLOPE PROTECTION AND RIP RAP.

CONCRETE CHAMFERS:

UNLESS OTHERWISE NOTED ON THE PLANS, ALL EXPOSED CORNERS ON STRUCTURES SHALL BE CHAMFERED ¾" WITH THE FOLLOWING EXCEPTIONS: TOP CORNERS OF CURBS MAY BE ROUNDED TO 1½" RADIUS WHICH IS BUILT INTO CURB FORMS; CORNERS OF TRANSVERSE FLOOR EXPANSION JOINTS SHALL BE ROUNDED WITH A ¼" FINISHING TOOL UNLESS OTHERWISE REQUIRED ON PLANS; AND CORNERS OF EXPANSION JOINTS IN THE ROADWAY FACES AND TOPS OF CURBS AND SIDEWALKS SHALL BE ROUNDED TO A ¼" RADIUS WITH A FINISHING STONE OR TOOL UNLESS OTHERWISE REQUIRED ON PLANS.

DOWELS:

DOWELS WHEN INDICATED ON PLANS AS FOR CULVERT EXTENSIONS, SHALL BE EMBEDDED AT LEAST 12" INTO THE OLD CONCRETE AND GROUTED INTO PLACE WITH 1:2 CEMENT MORTAR.

ALLOWANCE FOR DEAD LOAD DEFLECTION, SETTLEMENT, ETC. IN CASTING SUPERSTRUCTURES:

BRIDGES SHALL BE BUILT ON THE GRADE OR VERTICAL CURVE SHOWN ON PLANS. SLABS, CURBS AND PARAPETS SHALL CONFORM TO THE GRADE OR CURVE.

ALL DIMENSIONS WHICH ARE GIVEN IN SECTION AND ARE AFFECTED BY DEAD LOAD DEFLECTIONS ARE DIMENSIONS AT CENTER LINE OF BEARING UNLESS OTHERWISE NOTED ON PLANS. IN SETTING FORMS FOR STEEL BEAM BRIDGES AND PRESTRESSED CONCRETE GIRDER BRIDGES, ADJUSTMENTS SHALL BE MADE DUE TO THE DEAD LOAD DEFLECTIONS FOR THE ELEVATIONS SHOWN. WHERE BLOCKS ARE SHOWN OVER BEAMS FOR BUILDING UP TO THE SLAB, THE VERTICAL DIMENSIONS OF THE BLOCKS SHALL BE ADJUSTED BETWEEN BEARINGS TO COMPENSATE FOR DEAD LOAD DEFLECTIONS, VERTICAL CURVE ORDINATE, AND ACTUAL BEAM CAMBER. WHERE BOTTOM OF SLAB IS IN LINE WITH BOTTOM OF TOP FLANGES, DEPTH OF SLAB BETWEEN BEARINGS SHALL BE ADJUSTED TO COMPENSATE FOR DEAD LOAD DEFLECTION, VERTICAL CURVE ORDINATE, AND ACTUAL BEAM CAMBER.

IN SETTING FALSEWORK AND FORMS FOR REINFORCED CONCRETE SPANS, AN ALLOWANCE SHALL BE MADE FOR DEAD LOAD DEFLECTIONS, SETTLEMENT OF FALSEWORK, AND PERMANENT CAMBER WHICH SHALL BE PROVIDED FOR IN ADDITION TO THE ELEVATIONS SHOWN. AFTER REMOVAL OF THE FALSEWORK, THE FINISHED STRUCTURES SHALL CONFORM TO THE PROFILE AND ELEVATIONS SHOWN ON THE PLANS AND CONSTRUCTION ELEVATIONS FURNISHED BY THE ENGINEER.

DETAILED DRAWINGS FOR FALSEWORK OR FORMS FOR BRIDGE SUPERSTRUCTURE AND ANY STRUCTURE OR PARTS OF A STRUCTURE AS NOTED ON THE PLANS SHALL BE SUBMITTED TO THE ENGINEER FOR APPROVAL BEFORE CONSTRUCTION OF THE FALSEWORK OR FORMS IS STARTED.

REINFORCING STEEL:

ALL REINFORCING STEEL SHALL BE DEFORMED. DIMENSIONS RELATIVE TO PLACEMENT OF REINFORCING ARE TO CENTERS OF BARS UNLESS OTHERWISE INDICATED IN THE PLANS. DIMENSIONS ON BAR DETAILS ARE TO CENTERS OF BARS OR ARE OUT TO OUT AS INDICATED ON PLANS.

WIRE BAR SUPPORTS SHALL BE PROVIDED FOR REINFORCING STEEL WHERE INDICATED ON THE PLANS. WHEN BAR SUPPORT PIECES ARE PLACED IN CONTINUOUS LINES, THEY SHALL BE SO PLACED THAT THE ENDS OF THE SUPPORTING WIRES SHALL BE LAPPED TO LOCK LEGS ON ADJOINING PIECES.

STRUCTURAL STEEL:

AT THE CONTRACTOR'S OPTION, HE MAY SUBSTITUTE 7/8" Ø SHEAR STUDS FOR THE ¾" Ø STUDS SPECIFIED ON THE PLANS. THIS SUBSTITUTION SHALL BE MADE AT THE RATE OF 3 - ⅞" Ø STUDS FOR 4 - ¾" Ø STUDS, AND STUD SPACING CHANGES SHALL BE MADE AS NECESSARY TO PROVIDE THE SAME EQUIVALENT NUMBER OF ⅞" Ø STUDS ALONG THE BEAM AS SHOWN FOR ¾" Ø STUDS BASED ON THE RATIO OF 3 - ⅞" Ø STUDS FOR 4 - ¾" Ø STUDS. STUDS OF THE LENGTH SPECIFIED ON THE PLANS MUST BE PROVIDED. THE MAXIMUM SPACING SHALL BE 2'-0".

EXCEPT AT THE INTERIOR SUPPORTS OF CONTINUOUS BEAMS WHERE THE COVER PLATE IS IN CONTACT WITH BEARING PLATE, THE CONTRACTOR MAY, AT HIS OPTION, SUBSTITUTE FOR THE COVER PLATES DESIGNATED ON THE PLANS COVER PLATES OF THE EQUIVALENT AREA PROVIDED THESE PLATES ARE AT LEAST 5/16" IN THICKNESS AND DO NOT EXCEED A WIDTH EQUAL TO THE FLANGE WIDTH LESS 2" OR A THICKNESS EQUAL TO 2 TIMES THE FLANGE THICKNESS. THE SIZE OF FILLET WELDS SHALL CONFORM TO THE REQUIREMENTS OF THE CURRENT ANSI/AASHTO/AWS "BRIDGE WELDING CODE". ELECTROSLAG WELDING WILL NOT BE PERMITTED.

WITH THE SOLE EXCEPTION OF EDGES AT SURFACES WHICH BEAR ON OTHER SURFACES, ALL SHARP EDGES AND ENDS OF SHAPES AND PLATES SHALL BE SLIGHTLY ROUNDED BY SUITABLE MEANS TO A RADIUS OF APPROXIMATELY 1/16 INCH OR EQUIVALENT FLAT SURFACE AT A SUITABLE ANGLE PRIOR TO PAINTING, GALVANIZING, OR METALLIZING.

HANDRAILS AND POSTS:

METAL STANDARDS AND FACES OF THE CONCRETE END POSTS FOR THE METAL RAIL SHALL BE SET NORMAL TO THE GRADE OF THE CURB, UNLESS OTHERWISE SHOWN ON PLANS. THE METAL RAIL AND TOPS OF CONCRETE POSTS USED WITH THE ALUMINUM RAIL SHALL BE BUILT PARALLEL TO THE GRADE OF THE CURB.

METAL HANDRAILS SHALL BE IN ACCORDANCE WITH THE PLANS. RAILS SHALL BE AS MANUFACTURED FOR BRIDGE RAILING. CASTINGS SHALL BE OF A UNIFORM APPEARANCE. FINS AND OTHER DEFORMATIONS RESULTING FROM CASTING OR OTHERWISE SHALL BE REMOVED IN A MANNER SO THAT A UNIFORM COLORING OF THE COMPLETED CASTING SHALL BE OBTAINED. CASTINGS WITH DISCOLORATIONS OR OF NON-UNIFORM COLORING WILL NOT BE ACCEPTED. CERTIFIED MILL REPORTS ARE REQUIRED FOR METAL RAILS AND POSTS.

SPECIAL NOTES:

GENERALLY, IN CASE OF DISCREPANCY, THIS STANDARD SHEET OF NOTES SHALL GOVERN OVER THE SPECIFICATIONS, BUT THE REMAINDER OF THE PLANS SHALL GOVERN OVER NOTES HEREON, AND SPECIAL PROVISIONS SHALL GOVERN OVER ALL. SEE SPECIFICATIONS ARTICLE 105-4.

ENGLISH

JANUARY, 1990