TIP PROJECT: BD-5103O

CONTRACT:

See Sheet 1-A For Index of Sheets

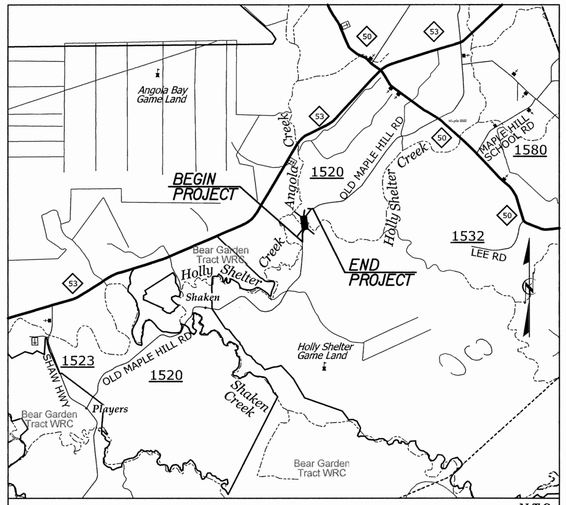

VICINITY MAP *N.T.S.*

STATE OF NORTH CAROLINA
DIVISION OF HIGHWAYS

PENDER COUNTY

LOCATION: BRIDGE NO. 117 OVER HOLLY SHELTER CREEK ON SR 1520 (OLD MAPLE HILL ROAD)

TYPE OF WORK: LOW IMPACT BRIDGE REPLACEMENT

STATE	PROJECT REFERENCE NO.	SHEET NO.	TOTAL SHEETS
NC	BD-5103O	1	X

STATE PROJ. NO.	F.A. PROJ. NO.	DESCRIPTION
45349.3.15	BRZ-1520(17)	CONST

NAD 83

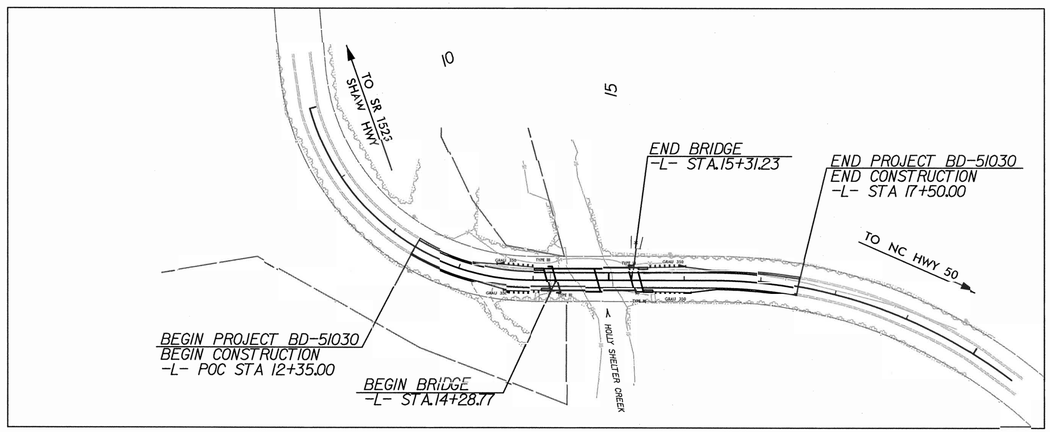

CLEARING ON THIS PROJECT SHALL BE PERFORMED TO THE LIMITS ESTABLISHED BY METHOD II.

GRAPHIC SCALES

PLANS: 50 25 0 50 100

PROFILE (HORIZONTAL): 50 25 0 50 100

PROFILE (VERTICAL): 10 5 0 10 20

DESIGN DATA

ADT 2009 = 160
ADT 2035 = 320
DHV = 10%
D = 60%
T = 6% *
V = 30 MPH

* TTST 1% DUAL 2%

PROJECT LENGTH

LENGTH OF ROADWAY TIP PROJECT BD-5103O = 0.08 MI.

LENGTH OF STRUCTURE TIP PROJECT BD-5103O = 0.02 MI.

TOTAL LENGTH OF TIP PROJECT BD-5103O = 0.10 MI.

Prepared In the Office of:

HNTB NORTH CAROLINA, P.C.
343 E. Six Forks Road, Suite 200
Raleigh, North Carolina 27609
NC License No: C-1554

2012 STANDARD SPECIFICATIONS

RIGHT OF WAY DATE: FEBRUARY 9, 2012

LETTING DATE: MAY 17, 2012

ENRICO A. ROQUE, P.E.
PROJECT ENGINEER

ANTHONY THOMPSON, P.E
PROJECT DESIGNER

AMANDA GLYNN, P.E.
NCDOT CONTACT

HYDRAULICS ENGINEER

NORTH CAROLINA PROFESSIONAL SEAL 15764 ENGINEER JAMES A. BYRD

SIGNATURE: James A. Byrd 3-16-12

ROADWAY DESIGN ENGINEER

3/15/12

NORTH CAROLINA PROFESSIONAL SEAL 19824 ENGINEER ENRICO A. ROQUE, JR.

SIGNATURE: Enrico A. Roque P.E.

DIVISION OF HIGHWAYS STATE OF NORTH CAROLINA

DEPARTMENT OF TRANSPORTATION • STATE OF NORTH CAROLINA •

P.E.
STATE HIGHWAY DESIGN ENGINEER

3/15/2012
3:05:42 PM
...\Proj\BD5103O_rdy_tsh.dgn

HNTB NORTH CAROLINA, P.C.
343 E. Six Forks Road, Suite 200
Raleigh, North Carolina 27609
NC License No: C-1554

PROJECT REFERENCE NO.	SHEET NO.
BD-51030	1-A
R/W SHEET NO.	

ROADWAY DESIGN ENGINEER

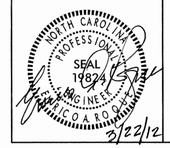

INDEX OF SHEETS

SHEET NUMBER	SHEET
1	TITLE SHEET
1-A	INDEX OF SHEETS, GENERAL NOTES & LIST OF STANDARDS
1-B	SYMBOLOGY SHEET
2	TYPICAL SECTION SHEET
3	EARTHWORK, PAVEMENT REMOVAL, GUARDRAIL SUMMARY, ROW SUMMARY, & DRAINAGE SUMMARY SHEET
4	PLAN & PROFILE SHEET
TCP-1 THRU TCP-2	TRAFFIC CONTROL PLANS
EC-1	EROSION CONTROL TITLE SHEET
EC-2	EROSION CONTROL - COIR FIBER WATTLE DETAIL
EC-3	EROSION CONTROL- WATTLE / SILT FENCE BREAK DETAIL
EC-4	EROSION CONTROL - SOIL STABILIZATION TIME FRAMES
EC-5	EROSION CONTROL SHEET
X-1 THRU X-3	-L- CROSS SECTION SHEETS
S-1 THRU S-22	BRIDGE PLANS
UBO-1 THRU UBO-2	UTILITY PLANS BY OTHERS

GENERAL NOTES:

2012 SPECIFICATIONS
EFFECTIVE: 01-17-12
REVISED: 11/01/11

GRADE LINE:
GRADING AND SURFACING:

THE GRADE LINES SHOWN DENOTE THE FINISHED ELEVATION OF THE PROPOSED SURFACING AT GRADE POINTS SHOWN ON THE TYPICAL SECTIONS. GRADE LINES MAY BE ADJUSTED AT THEIR BEGINNING AND ENDING AND AT STRUCTURES AS DIRECTED BY THE ENGINEER IN ORDER TO SECURE A PROPER TIE-IN.

CLEARING:

CLEARING ON THIS PROJECT SHALL BE PERFORMED TO THE LIMITS ESTABLISHED BY METHOD III.

SUPERELEVATION:

ALL CURVES ON THIS PROJECT SHALL BE SUPERELEVATED IN ACCORDANCE WITH STD. NO. 225.04 USING THE RATE OF SUPERELEVATION AND RUNOFF SHOWN ON THE PLANS. SUPERELEVATION IS TO BE REVOLVED ABOUT THE GRADE POINTS SHOWN ON THE TYPICAL SECTIONS.

SHOULDER CONSTRUCTION:

ASPHALT, EARTH, AND CONCRETE SHOULDER CONSTRUCTION ON THE HIGH SIDE OF SUPERELEVATED CURVES SHALL BE IN ACCORDANCE WITH STD. NO. 560.01.

GUARDRAIL:

THE GUARDRAIL LOCATIONS SHOWN ON THE PLANS MAY BE ADJUSTED DURING CONSTRUCTION AS DIRECTED BY THE ENGINEER. THE CONTRACTOR SHOULD CONSULT WITH THE ENGINEER PRIOR TO ORDERING GUARDRAIL MATERIAL.

UTILITIES:

UTILITY OWNERS ON THIS PROJECT ARE AT&T

Pender County Utilities

Four County Electric

ANY RELOCATION OF EXISTING UTILITIES WILL BE ACCOMPLISHED BY OTHERS, EXCEPT AS SHOWN ON THE PLANS.

2012 ROADWAY ENGLISH STANDARD DRAWINGS

The following Roadway Standards as appear in "Roadway Standard Drawings" Highway Design Branch - N. C. Department of Transportation - Raleigh, N. C., Dated January, 2012 are applicable to this project and by reference hereby are considered a part of these plans:

STD.NO.	TITLE
DIVISION 2 - EARTHWORK	
200.03	Method of Clearing - Method II
225.02	Guide for Grading Subgrade - Secondary and Local
225.04	Method of Obtaining Superelevation - Two Lane Pavement
DIVISION 3 - PIPE CULVERTS	
300.01	Method of Pipe Installation
DIVISION 4 - MAJOR STRUCTURES	
422.10	Reinforced Bridge Approach Fills
DIVISION 5 - SUBGRADE, BASES AND SHOULDERS	
560.01	Method of Shoulder Construction - High Side of Superelevated Curve - Method I
DIVISION 8 - INCIDENTALS	
840.20	Frames and Wide Slot Flat Grates
840.36	Traffic Bearing Grated Drop Inlet - for Steel (840.37) Double Frame and Grates
846.01	Concrete Curb, Gutter and Curb & Gutter
848.02	Driveway Turnout - Radius Type
862.01	Guardrail Placement
862.02	Guardrail Installation
862.03	Structure Anchor Units
876.01	Rip Rap in Channels
876.02	Guide for Rip Rap at Pipe Outlets

CENTERLINE COORDINATE LIST

POINT	STATION	NORTHING	EASTING
PC	10+00.00	325,180.0943	2,381,131.2710
BEG	12+35.00	325,400.0917	2,381,195.8057
PT	13+98.94	325,551.3189	2,381,137.7540
PC	16+36.18	325,742.4722	2,380,997.2512
END	17+50.00	325,839.5663	2,380,938.1247
PT	20+60.85	326,139.9497	2,380,870.3829

NOTE: SEE SHEET NO. 4 FOR DATUM DESCRIPTION

REVISIONS

3/22/2012
10:14:40 AM
...\Proj\BD51030_rdy_gen.dgn

PROJECT REFERENCE NO.	SHEET NO.
BD-5I030	1-B

Note: Not to Scale

****S.U.E. = Subsurface Utility Engineering***

STATE OF NORTH CAROLINA
DIVISION OF HIGHWAYS

CONVENTIONAL PLAN SHEET SYMBOLS

BOUNDARIES AND PROPERTY:

- State Line
- County Line
- Township Line
- City Line
- Reservation Line
- Property Line
- Existing Iron Pin — EIP
- Property Corner
- Property Monument — ECM
- Parcel/Sequence Number — 123
- Existing Fence Line
- Proposed Woven Wire Fence
- Proposed Chain Link Fence
- Proposed Barbed Wire Fence
- Existing Wetland Boundary — WLB
- Proposed Wetland Boundary — WLB
- Existing Endangered Animal Boundary — EAB
- Existing Endangered Plant Boundary — EPB

BUILDINGS AND OTHER CULTURE:

- Gas Pump Vent or U/G Tank Cap
- Sign — S
- Well — W
- Small Mine
- Foundation
- Area Outline
- Cemetery
- Building
- School
- Church
- Dam

HYDROLOGY:

- Stream or Body of Water
- Hydro, Pool or Reservoir
- Jurisdictional Stream — JS
- Buffer Zone 1 — BZ 1
- Buffer Zone 2 — BZ 2
- Flow Arrow
- Disappearing Stream
- Spring
- Wetland
- Proposed Lateral, Tail, Head Ditch — FLOW
- False Sump

RAILROADS:

- Standard Gauge — CSX TRANSPORTATION
- RR Signal Milepost — MILEPOST 35
- Switch — SWITCH
- RR Abandoned
- RR Dismantled

RIGHT OF WAY:

- Baseline Control Point
- Existing Right of Way Marker
- Existing Right of Way Line
- Proposed Right of Way Line — RW
- Proposed Right of Way Line with Iron Pin and Cap Marker — RW
- Proposed Right of Way Line with Concrete or Granite Marker — RW
- Existing Control of Access — CA
- Proposed Control of Access — CA
- Existing Easement Line — E
- Proposed Temporary Construction Easement — E
- Proposed Temporary Drainage Easement — TDE
- Proposed Permanent Drainage Easement — PDE
- Proposed Permanent Utility Easement — PUE

ROADS AND RELATED FEATURES:

- Existing Edge of Pavement
- Existing Curb
- Proposed Slope Stakes Cut — C
- Proposed Slope Stakes Fill — F
- Proposed Wheel Chair Ramp — WCR
- Proposed Wheel Chair Ramp Curb Cut — WCC
- Curb Cut for Future Wheel Chair Ramp — CCFR
- Existing Metal Guardrail
- Proposed Guardrail
- Existing Cable Guiderail
- Proposed Cable Guiderail
- Equality Symbol
- Pavement Removal

VEGETATION:

- Single Tree
- Single Shrub
- Hedge
- Woods Line
- Orchard
- Vineyard — Vineyard

EXISTING STRUCTURES:

MAJOR:

- Bridge, Tunnel or Box Culvert — CONC
- Bridge Wing Wall, Head Wall and End Wall — CONC WW

MINOR:

- Head and End Wall — CONC HW
- Pipe Culvert
- Footbridge
- Drainage Box: Catch Basin, DI or JB — CB
- Paved Ditch Gutter
- Storm Sewer Manhole — S
- Storm Sewer — S

UTILITIES:

POWER:

- Existing Power Pole
- Proposed Power Pole
- Existing Joint Use Pole
- Proposed Joint Use Pole
- Power Manhole — P
- Power Line Tower
- Power Transformer
- U/G Power Cable Hand Hole — HH
- H-Frame Pole
- Recorded U/G Power Line — P
- Designated U/G Power Line (S.U.E.*) — P

TELEPHONE:

- Existing Telephone Pole
- Proposed Telephone Pole
- Telephone Manhole — T
- Telephone Booth
- Telephone Pedestal — T
- Telephone Cell Tower
- U/G Telephone Cable Hand Hole — HH
- Recorded U/G Telephone Cable — T
- Designated U/G Telephone Cable (S.U.E.*) — T
- Recorded U/G Telephone Conduit — TC
- Designated U/G Telephone Conduit (S.U.E.*) — TC
- Recorded U/G Fiber Optics Cable — T FO
- Designated U/G Fiber Optics Cable (S.U.E.*) — T FO

WATER:

- Water Manhole — W
- Water Meter
- Water Valve
- Water Hydrant
- Recorded U/G Water Line — W
- Designated U/G Water Line (S.U.E.*) — W
- Above Ground Water Line — A/G Water

TV:

- TV Satellite Dish
- TV Pedestal — C
- TV Tower
- U/G TV Cable Hand Hole — HH
- Recorded U/G TV Cable — TV
- Designated U/G TV Cable (S.U.E.*) — TV
- Recorded U/G Fiber Optic Cable — TV FO
- Designated U/G Fiber Optic Cable (S.U.E.*) — TV FO

GAS:

- Gas Valve
- Gas Meter
- Recorded U/G Gas Line — G
- Designated U/G Gas Line (S.U.E.*) — G
- Above Ground Gas Line — A/G Gas

SANITARY SEWER:

- Sanitary Sewer Manhole
- Sanitary Sewer Cleanout
- U/G Sanitary Sewer Line — SS
- Above Ground Sanitary Sewer — A/G Sanitary Sewer
- Recorded SS Forced Main Line — FSS
- Designated SS Forced Main Line (S.U.E.*) — FSS

MISCELLANEOUS:

- Utility Pole
- Utility Pole with Base
- Utility Located Object
- Utility Traffic Signal Box — S
- Utility Unknown U/G Line — ?UTL
- U/G Tank; Water, Gas, Oil
- A/G Tank; Water, Gas, Oil
- U/G Test Hole (S.U.E.*)
- Abandoned According to Utility Records — AATUR
- End of Information — E.O.I.

HNTB NORTH CAROLINA, P.C.
343 E. Six Forks Road, Suite 200
Raleigh, North Carolina 27609
NC License No: C-1554

PROJECT REFERENCE NO.	SHEET NO.
BD-51030	2
R/W SHEET NO.	

ROADWAY DESIGN ENGINEER



REVISIONS

PAVEMENT SCHEDULE	
B	PROP. APPROX. 5/8" OPEN-GRADED ASPHALT FRICTION COURSE, TYPE FC-1, AT AN AVERAGE RATE OF 43.8 LBS. PER SQ. YARD.
C	PROP. APPROX. 3" ASPHALT CONCRETE SURFACE COURSE, TYPE SF9.5A, AT AN AVERAGE RATE OF 165 LBS. PER SQ. YARD IN EACH OF TWO LAYERS.
E1	PROP. APPROX. 5" ASPHALT CONCRETE BASE COURSE, TYPE B25.0B, AT AN AVERAGE RATE OF 570 LBS. PER SQ. YARD.
E2	PROP. VARIABLE DEPTH ASPHALT CONCRETE BASE COURSE, TYPE B25.0B AT AN AVERAGE RATE OF 114 LBS. PER SQ. YARD PER INCH. DEPTH TO BE PLACED IN LAYERS NOT GREATER THAN 5.5" IN DEPTH OR LESS THAN 3" IN DEPTH.
T	EARTH MATERIAL
U	EXISTING PAVEMENT
W	WEDGING (SEE DETAIL)

ALL PAVEMENT EDGE SLOPES ARE 1:1 UNLESS SHOWN OTHERWISE

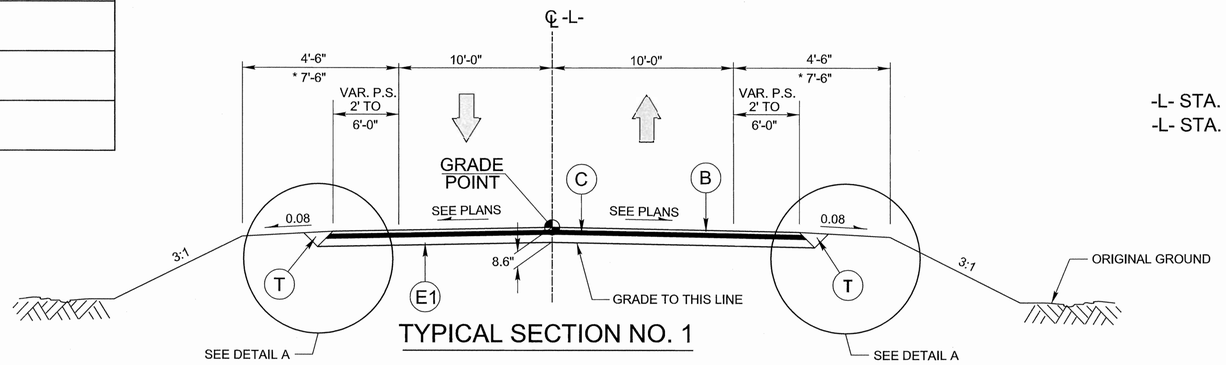

TYPICAL SECTION NO. 1

USE TYPICAL SECTION NO. 1 FROM:
-L- STA. 12+35.00 TO -L- STA. 14+28.77 (BEGIN BRIDGE)
-L- STA. 15+31.23 (END BRIDGE) TO -L- STA. 17+50.00

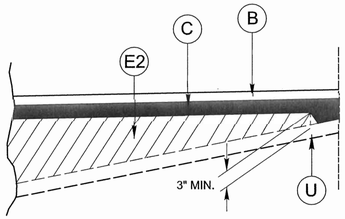

DETAIL SHOWING METHOD OF WEDGING

SEE TYPICAL SECTIONS

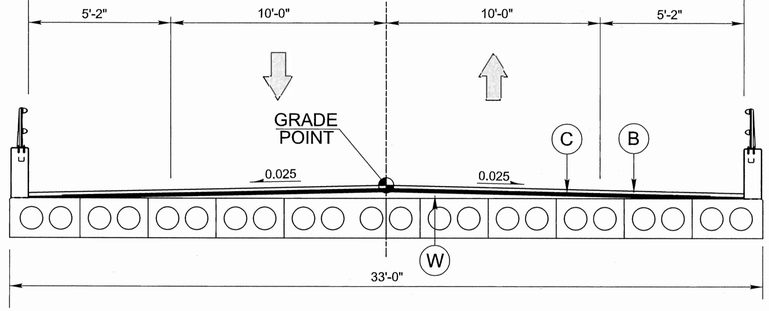

TYPICAL SECTION NO. 2

CORED SLAB BRIDGE OVERLAY

USE TYPICAL SECTION NO. 2 FROM:
-L- STA. 14+28.77 (BEGIN BRIDGE) TO -L- STA. 15+31.23 (END BRIDGE)

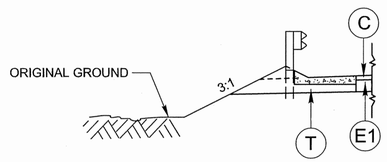

DETAIL A

SHOULDER BERM GUTTER LOCATIONS
-L- STA. 14+09.4 TO -L- STA. 14+21.9 (RT)
-L- STA. 14+01.2 TO -L- STA. 14+13.7 (LT)
-L- STA. 15+46.3 TO -L- STA. 15+58.8 (RT)
-L- STA. 15+38.1 TO -L- STA. 15+50.6 (LT)

NOTES: * SHOULDER WIDTH INCREASED WITH THE USE OF GUARDRAIL

3/15/2012
3:17:57 PM
...\Proj\BD51030_rdy_typ.dgn

HNTB NORTH CAROLINA, P.C.
343 E. Six Forks Road, Suite 200
Raleigh, North Carolina 27609
NC License No: C-1554

PROJECT REFERENCE NO.	SHEET NO.
BD-5I030	3
R/W SHEET NO.	

ROADWAY DESIGN ENGINEER

NORTH CAROLINA PROFESSIONAL SEAL 19824 ENGINEER JAMES A BYRD
3/15/12

HYDRAULICS ENGINEER

NORTH CAROLINA PROFESSIONAL SEAL 15764 ENGINEER JAMES A BYRD
3-16-12

REVISIONS

ROW AREA DATA SUMMARY

PARCEL NO.	PROPERTY OWNERS NAMES	TOTAL ACREAGE	AREA TAKEN (SQFT)	AREA REMAINING RT.	AREA REMAINING LT.	CONST. EASE.	PERM. DRAIN. EASE.	TEMP. DRAIN. EASE.
1	TOWNSEND WILLOUGHBY	–				339.9		
2	ARTHUR T WOOTEN	–				1195.0		
3	IDA SUE DAVIS, ET AL	–				770.1		

SUMMARY OF EARTHWORK
IN CUBIC YARDS

STATION	STATION	UNCLASSIFIED EXCAVATION	EMBANK. +%	BORROW	WASTE
–L– STA. 12+35.00	–L– STA. 14+55.00	193	68		125
–L– STA. 15+13.00	–L– STA. 17+50.00	152	179	27	
GRAND TOTALS:		345	247		98
SAY:		350	250		100

DRAINAGE SUMMARY

STATION	LOCATION (LT,RT, OR CL)	STRUCTURE NO. FROM	STRUCTURE NO. TO	TOP ELEVATION	INVERT ELEVATION	INVERT ELEVATION	SLOPE CRITICAL	CLASS III R.C. PIPE (UNLESS NOTED OTHERWISE) 15"	18"	24"	QUANTITIES FOR DRAINAGE STRUCTURES: TOTAL L.F. FOR PAY QUANTITY SHALL BE COL.'A' + (1.3 X COL. 'B') A	B	PER EACH (0 THRU 5.0')	5.0' THRU 10.0'	10.0' AND ABOVE	GRATED D.I., TYPE 'B' STD. 840.36	D.I. FRAME AND GRATE STD. 840.20		REMARKS
–L– 14+03.42	LT	0401		16.22									1			1	1			
–L– 14+11.58	RT	0402		16.31									1			1	1			
–L– 14+07.50	CL	0401	0402		13.47	13.27		28												
–L– 14+11.58	RT	0402	OUT		13.27	13.18		12												
TOTAL								40					2			2	2			

ABBREVIATIONS

C.B.	CATCH BASIN
N.D.I.	NARROW DROP INLET
D.I.	DROP INLET
M.D.I.	MEDIAN DROP INLET
M.D.I. (N.S.)	MEDIAN DROP INLET (NARROW SLOT)
J.B.	JUNCTION BOX
M.H.	MANHOLE
T.B.D.I.	TRAFFIC BEARING DROP INLET
T.B.J.B.	TRAFFIC BEARING JUCTION BOX

PAVEMENT REMOVAL SUMMARY
IN SQUARE YARDS

LOCATION	REMOVAL OF ASPHALT PAVEMENT	BREAKING OF ASPHALT PAVEMENT
-L- STA. 12+35 TO 14+44	558	
-L- STA. 15+13 TO 17+50	608	
GRAND TOTAL	1166	
SAY	1200	

GUARDRAIL SUMMARY

SURVEY LINE	BEG. STA.	END STA.	LOCATION	LENGTH: STRAIGHT	LENGTH: SHOP CURVED	LENGTH: DOUBLE FACED	WARRANT POINT: APPROACH END	WARRANT POINT: TRAILING END	"N" DIST. FROM E.O.L.	TOTAL SHOULDER WIDTH	FLARE LENGTH: APPROACH END	FLARE LENGTH: TRAILING END	W: APPROACH END	W: TRAILING END	ANCHORS: XI MOD	XI	GRAU 350	TYPE 350 (TL-3)	XIII	CAT-1	III	BIC	AT-1	IMPACT ATTENUATOR TYPE 350: EA	G	NG	SINGLE FACED GUARDRAIL	REMOVE EXISTING GUARDRAIL	REMOVE AND STOCKPILE EXISTING GUARDRAIL	REMARKS
–L–	13+57.85	14+32.85	RT	75.0			14+32.85		3	6	50		1					1			1									
–L–	13+49.69	14+24.69	LT	75.0				14+24.69	3	6		50		1				1			1									
–L–	15+35.31	16+10.31	RT	75.0				15+35.31	3	6		50		1				1			1									
–L–	15+27.15	16+02.15	LT	75.0			15+27.15		3	6	50		1					1			1									
	LESS ANCHOR DEDUCTIONS																													
	TYPE 350, TL-2	4 @ 50.00'	=	200.00																										
	TYPE III	4 @ 18.75'	=	75.00																										
			TOTAL	25.00														4			4									
			SAY	25.00																										
	(5 ADDITIONAL GUARDRAIL POST)																													

3/15/2012
3:11:57 PM
...\Proj\BD51030_rdy_sum.dgn

PLAN

-L-	
PI Sta 12+33.52	PI Sta 18+56.33
Δ = 74° 41' 52.9" (LT)	Δ = 37° 15' 44.3" (RT)
D = 18° 43' 26.8"	D = 8° 46' 27.3"
L = 398.94'	L = 424.68'
T = 233.52'	T = 220.15'
R = 306.00'	R = 653.00'

POINT	NORTHING	EASTING	ELEV
117-1	325250.144	2381189.098	17.92'
117-2	325557.638	2381113.744	14.88'
117-3	326022.078	2380861.792	16.54'

DATUM DESCRIPTION

THE LOCALIZED COORDINATE SYSTEM DEVELOPED FOR THIS PROJECT IS BASED ON THE STATE PLANE COORDINATES ESTABLISHED BY NCDOT FOR MONUMENT "117-1"
WITH NAD 83/NSRS 2007 STATE PLANE GRID COORDINATES OF NORTHING: 325250.1440(ft) EASTING: 2381189.098(ft)
ELEVATION: 17.92(ft)
THE AVERAGE COMBINED GRID FACTOR USED ON THIS PROJECT (GROUND TO GRID) IS: 0.999934655
THE N.C. LAMBERT GRID BEARING AND LOCALIZED HORIZONTAL GROUND DISTANCE FROM "117-1" TO -L- STATION 10+00 IS
S 39° 31' 24.76" W 90.8173'
ALL LINEAR DIMENSIONS ARE LOCALIZED HORIZONTAL DISTANCES
VERTICAL DATUM USED IS NAVD 88

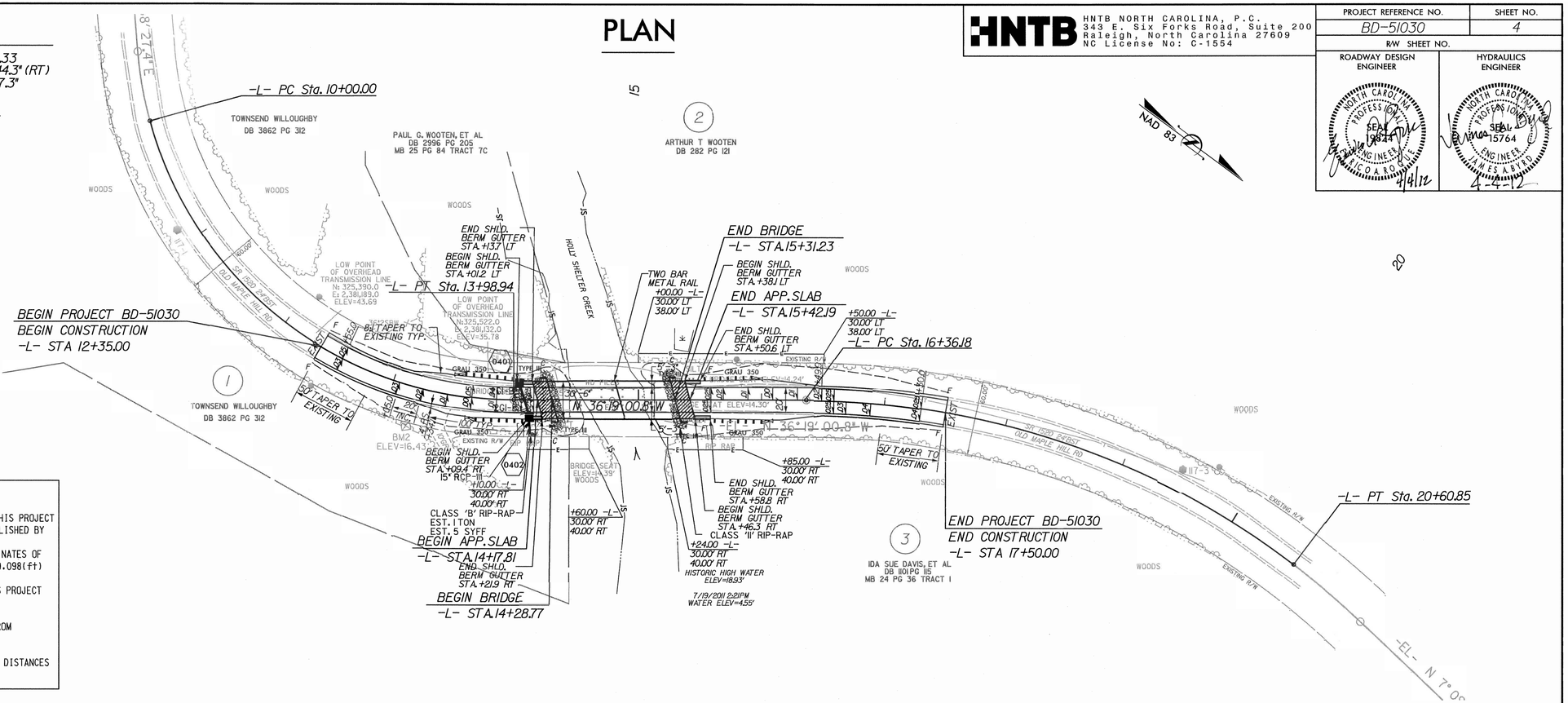

PROFILE

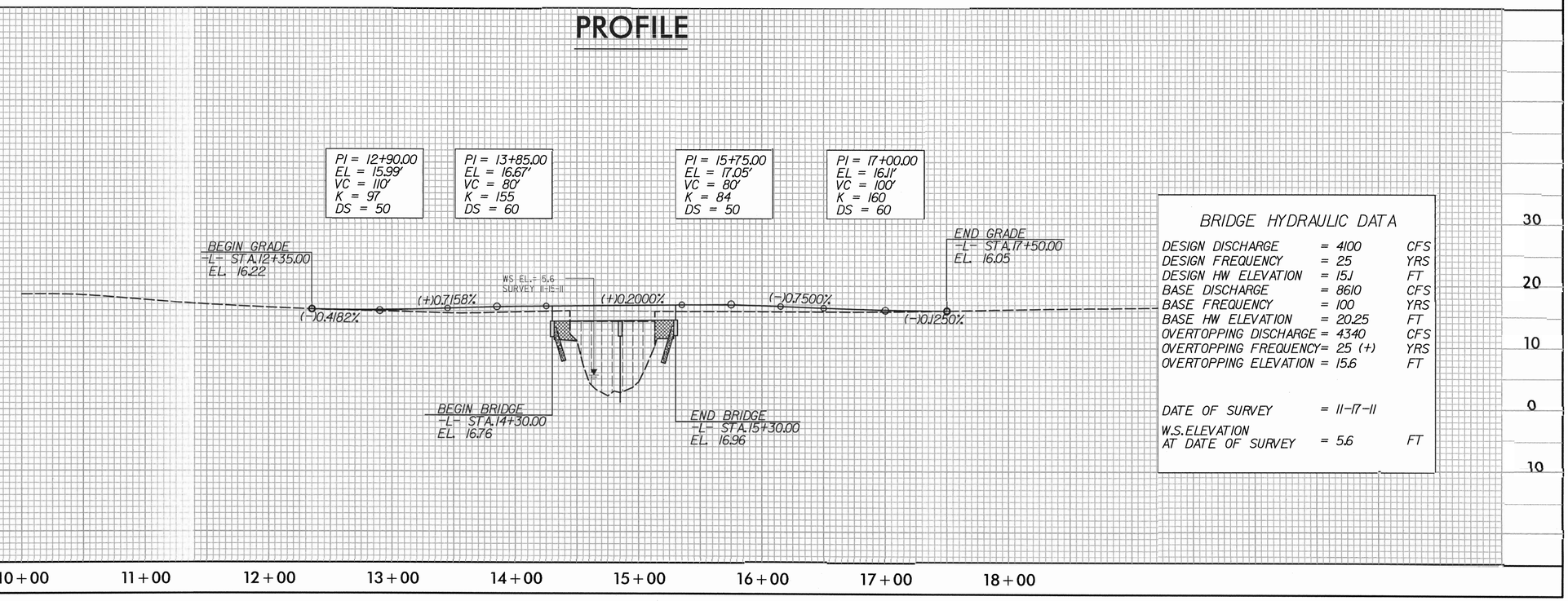

BRIDGE HYDRAULIC DATA

DESIGN DISCHARGE	= 4100	CFS
DESIGN FREQUENCY	= 25	YRS
DESIGN HW ELEVATION	= 15.1	FT
BASE DISCHARGE	= 8610	CFS
BASE FREQUENCY	= 100	YRS
BASE HW ELEVATION	= 20.25	FT
OVERTOPPING DISCHARGE	= 4340	CFS
OVERTOPPING FREQUENCY	= 25 (+)	YRS
OVERTOPPING ELEVATION	= 15.6	FT
DATE OF SURVEY	= 11-17-11	
W.S. ELEVATION AT DATE OF SURVEY	= 5.6	FT

HNTB NORTH CAROLINA, P.C.
343 E. Six Forks Road, Suite 200
Raleigh, North Carolina 27609
NC License No: C-1554

PROJECT REFERENCE NO.	SHEET NO.
BD-51030	4
R/W SHEET NO.	

ROADWAY DESIGN ENGINEER
NORTH CAROLINA PROFESSIONAL SEAL 19824 ENGINEER JESSICA R. OGLE
7/4/12

HYDRAULICS ENGINEER
NORTH CAROLINA PROFESSIONAL SEAL 15764 ENGINEER JAMES A. BYRD
4-4-12

REVISIONS

4/4/2012
4:28:03 PM
...\Proj\BD51030_rdy_psh_s04.dgn

STATE OF NORTH CAROLINA
DIVISION OF HIGHWAYS

TRANSPORTATION MANAGEMENT PLAN

PENDER COUNTY

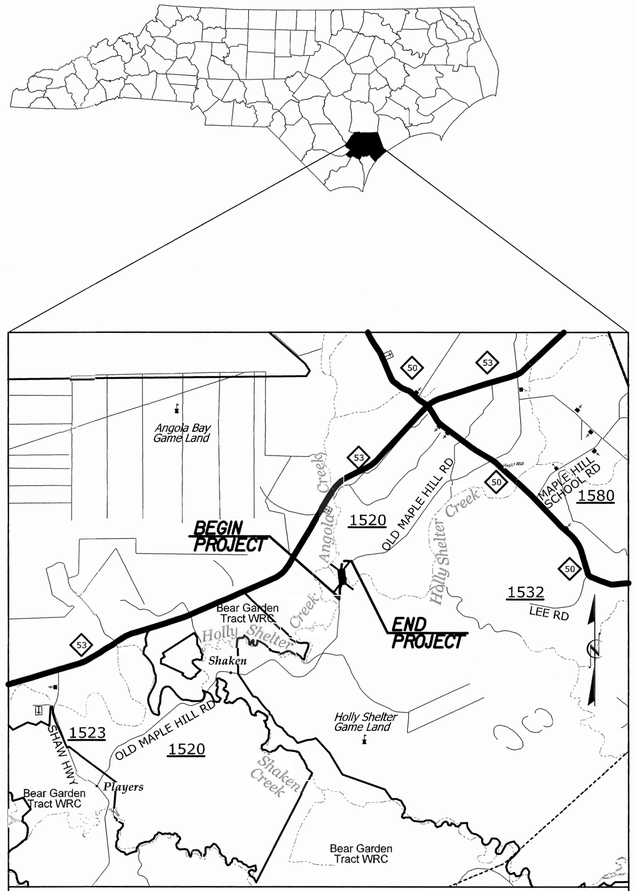

N.T.S.

VICINITY MAP

INDEX OF SHEETS

SHEET NO.	TITLE
TMP-1	TITLE SHEET, AND INDEX OF SHEETS
TMP-1A	LIST OF APPLICABLE ROADWAY STANDARD DRAWINGS, LEGEND, AND TEMPORARY PAVEMENT MARKING TRANSPORTATION OPERATIONS PLAN: (MANAGEMENT STRATEGIES, GENERAL NOTES AND LOCAL NOTES)
TMP-2	TEMPORARY TRAFFIC CONTROL PHASING

ROADWAY STANDARD DRAWINGS

THE FOLLOWING ROADWAY STANDARDS AS SHOWN IN "ROADWAY STANDARD DRAWINGS" PROJECT SERVICES UNIT - N.C. DEPARTMENT OF TRANSPORTATION - RALEIGH, N.C. DATED JAN 2012 ARE APPLICABLE TO THIS PROJECT AND BY REFERENCE HEREBY ARE CONSIDERED A PART OF THESE PLANS:

STD. NO.	TITLE
1101.03	TEMPORARY ROAD CLOSURES
1101.11	TRAFFIC CONTROL DESIGN TABLES
1110.01	STATIONARY WORK ZONE SIGNS
1145.01	BARRICADES
1205.01	PAVEMENT MARKINGS - LINE TYPES & OFFSETS
1205.02	PAVEMENT MARKINGS - 2 LANE & MULTILANE ROADWAYS
1205.12	PAVEMENT MARKINGS - BRIDGES
1250.01	PAVEMENT MARKER SPACING
1253.01	RAISED PAVEMENT MARKERS - SNOWPLOWABLE
1261.01	GUARDRAIL AND BARRIER DELINEATOR SPACING
1261.02	GUARDRAIL AND BARRIER DELINEATOR TYPE
1262.01	GUARDRAIL END DELINEATION

HNTB
HNTB NORTH CAROLINA, P.C.
343 E. Six Forks Road, Suite 200
Raleigh, North Carolina 27609
NC License No: C-1554

R. B. EARLY, PE — TRAFFIC CONTROL PROJECT ENGINEER
J. A. PHILLIPS — TRAFFIC CONTROL DESIGN ENGINEER

APPROVED: Rhonda B. Early
DATE: 3.15.12

SEAL — NORTH CAROLINA PROFESSIONAL SEAL 023521 ENGINEER RHONDA B. EARLY



WORK ZONE SAFETY & MOBILITY
"from the MOUNTAINS to the COAST"

N.C.D.O.T. WORK ZONE TRAFFIC CONTROL
1561 MAIL SERVICE CENTER (MSC) RALEIGH, NC 27699-1561
750 N. GREENFIELD PARKWAY, GARNER, NC 27529 (DELIVERY)
PHONE: (919) 773-2800 FAX: (919) 771-2745

KATHERINE HITE, PE — DIVISION TRAFFIC ENGINEER

DIVISION OF HIGHWAYS · STATE OF NORTH CAROLINA · DEPARTMENT OF TRANSPORTATION · WORK ZONE TRAFFIC CONTROL

SHEET NO.
TMP-1

BD-5103O

TIP PROJECT:

$$$$SYSTIME$$$$ $$$$DGN$$$$ $$$$USERNAME$$$$

HNTB NORTH CAROLINA, P.C.
343 E. Six Forks Road, Suite 200
Raleigh, North Carolina 27609
NC License No: C-1554

PROJ. REFERENCE NO.	SHEET NO.
BD-51030	TMP-1A

PHASING

PHASE I

PRIOR TO ANY CONSTRUCTION OPERATIONS, PLACE AND COVER OFF-SITE DETOUR SIGNS AS SHOWN ON TCP-2 AND IN ACCORDANCE WITH RSD 1101.03 (SHEET 1 OF 9). PLACE CMS AND ACTIVATE ON EACH SIDE OF THE BRIDGE TO BE CLOSED.

PHASE II

USING OFF-SITE DETOUR, UNCOVER DETOUR SIGNS, RELOCATE CMS BOARDS AS SHOWN ON TMP-2 AND CLOSE -L- (SR 1520 / OLD MAPLE HILL RD.) TO TRAFFIC AND CONSTRUCT BRIDGE, APPROACHES AND ROADWAY UP TO AND INCLUDING THE FINAL LAYER OF SURFACE COURSE.

PHASE III

UPON COMPLETION OF BRIDGE, APPROACHES AND ROADWAY, PLACE FINAL PAVEMENT MARKINGS AND MARKERS IN ACCORDANCE WITH ROADWAY STANDARD DRAWINGS. REMOVE BARRICADES AND DETOUR SIGNS AND OPEN -L- (SR 1520 / OLD MAPLE HILL RD.) TO TRAFFIC.

GENERAL NOTES

CHANGES MAY BE REQUIRED WHEN PHYSICAL DIMENSIONS IN THE DETAIL DRAWINGS, STANDARD DETAILS, AND ROADWAY DETAILS ARE NOT ATTAINABLE TO MEET FIELD CONDITIONS OR RESULT IN DUPLICATE OR UNDESIRED OVERLAPPING OF DEVICES. MODIFICATION MAY INCLUDE: MOVING, SUPPLEMENTING, COVERING, OR REMOVAL OF DEVICES AS DIRECTED BY THE ENGINEER.

THE FOLLOWING GENERAL NOTES APPLY AT ALL TIMES FOR THE DURATION OF THE CONSTRUCTION PROJECT EXCEPT WHEN OTHERWISE NOTED IN THE PLAN OR DIRECTED BY THE ENGINEER.

LANE AND SHOULDER CLOSURE REQUIREMENTS

A) REMOVE LANE CLOSURE DEVICES FROM THE LANE WHEN WORK IS NOT BEING PERFORMED BEHIND THE LANE CLOSURE OR WHEN A LANE CLOSURE IS NO LONGER NEEDED OR AS DIRECTED BY THE ENGINEER.

B) WHEN PERSONNEL AND/OR EQUIPMENT ARE WORKING WITHIN 15 FT OF AN OPEN TRAVEL LANE, CLOSE THE NEAREST OPEN SHOULDER USING ROADWAY STANDARD DRAWING NO. 1101.04 UNLESS THE WORK AREA IS PROTECTED BY BARRIER OR GUARDRAIL OR A LANE CLOSURE IS INSTALLED.

TRAFFIC PATTERN ALTERATIONS

C) NOTIFY THE ENGINEER TWENTY ONE (21) CALENDAR DAYS PRIOR TO ANY TRAFFIC PATTERN ALTERATION.

SIGNING

D) INSTALL ADVANCE WORK ZONE WARNING SIGNS WHEN WORK IS WITHIN 40 FT FROM THE EDGE OF TRAVEL LANE AND NO MORE THAN THREE (3) DAYS PRIOR TO THE BEGINNING OF CONSTRUCTION.

E) PROVIDE SIGNING AND DEVICES REQUIRED TO CLOSE THE ROAD ACCORDING TO THE ROADWAY STANDARD DRAWINGS AND TRAFFIC CONTROL PLANS.

PROVIDE SIGNING REQUIRED FOR THE OFF-SITE DETOUR ROUTE AS SHOWN ON THIS SHEET.

F) COVER OR REMOVE ALL SIGNS AND DEVICES REQUIRED TO CLOSE THE ROAD WHEN ROAD CLOSURE IS NOT IN OPERATION.

COVER OR REMOVE ALL SIGNS REQUIRED FOR THE OFF-SITE DETOUR WHEN THE DETOUR IS NOT IN OPERATION.

G) ENSURE ALL NECESSARY SIGNING IS IN PLACE PRIOR TO ALTERING ANY TRAFFIC PATTERN.

TRAFFIC CONTROL DEVICES

H) PLACE TYPE III BARRICADES, WITH "ROAD CLOSED" SIGN R11-2 ATTACHED, OF SUFFICIENT LENGTH TO CLOSE ENTIRE ROADWAY.

I) INSTALL AND ACTIVATE CMS BOARDS 2 WEEKS PRIOR TO ROAD CLOSURE.

PAVEMENT MARKINGS AND MARKERS

J) INSTALL PAVEMENT MARKINGS ON THE FINAL SURFACE AS FOLLOWS:

ROAD NAME	MARKING	MARKERS
SR 1520 (OLD MAPLE HILL RD)	THERMOPLASTIC	SNOWPLOWABLE

K) INSTALL VIBRALINE TREATMENT TO FINAL EDGELINE PAVEMENT MARKINGS.

L) TIE PROPOSED PAVEMENT MARKING LINES TO EXISTING PAVEMENT MARKING LINES.

M) REMOVE/REPLACE ANY CONFLICTING/DAMAGED PAVEMENT MARKINGS.

N) PASSING ZONE WILL BE DETERMINED IN THE FIELD AND MUST BE APPROVED BY THE ENGINEER.

APPROVED: Rhonda B. Early DATE: 3-15-12

SEAL

NORTH CAROLINA PROFESSIONAL SEAL 023521 ENGINEER RHONDA B. EARLY

DIVISION OF HIGHWAYS STATE OF NORTH CAROLINA DEPARTMENT OF TRANSPORTATION WORK ZONE TRAFFIC CONTROL

TRANSPORTATION OPERATIONS PLAN

$$$$$$$$SYSTIME$$$$$$$$
$$$$$$$$$$$$$$$$DGN$$$$$$$$$$$$$$$$
$$$$$$$$USERNAME$$$$

PROJ. REFERENCE NO.	SHEET NO.
BD-51030	TMP-2

HNTB NORTH CAROLINA, P.C.
343 E. Six Forks Road, Suite 200
Raleigh, North Carolina 27609
NC License No: C-1554

A

R11-2
48"X30"



TYPE III BARRICADE

B

R11-3
60" x 30"



M4-10R
48" x 18"

TYPE III BARRICADE

C

R11-3
60" x 30"



M4-10L
48" x 18"

TYPE III BARRICADE

D

MESSAGE NO. 1	MESSAGE NO. 2
BRIDGE CLOSED	00/00/00 TO 00/00/00

CHANGEABLE MESSAGE SIGN

1

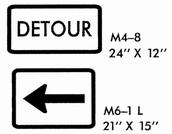

M4-8
24" X 12"

M6-1 L
21" X 15"

2



M4-8
24" X 12"



M6-1
21" X 15"

3

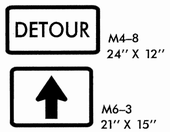

M4-8
24" X 12"

M6-3
21" X 15"

4



M4-8 A
24" X 18"

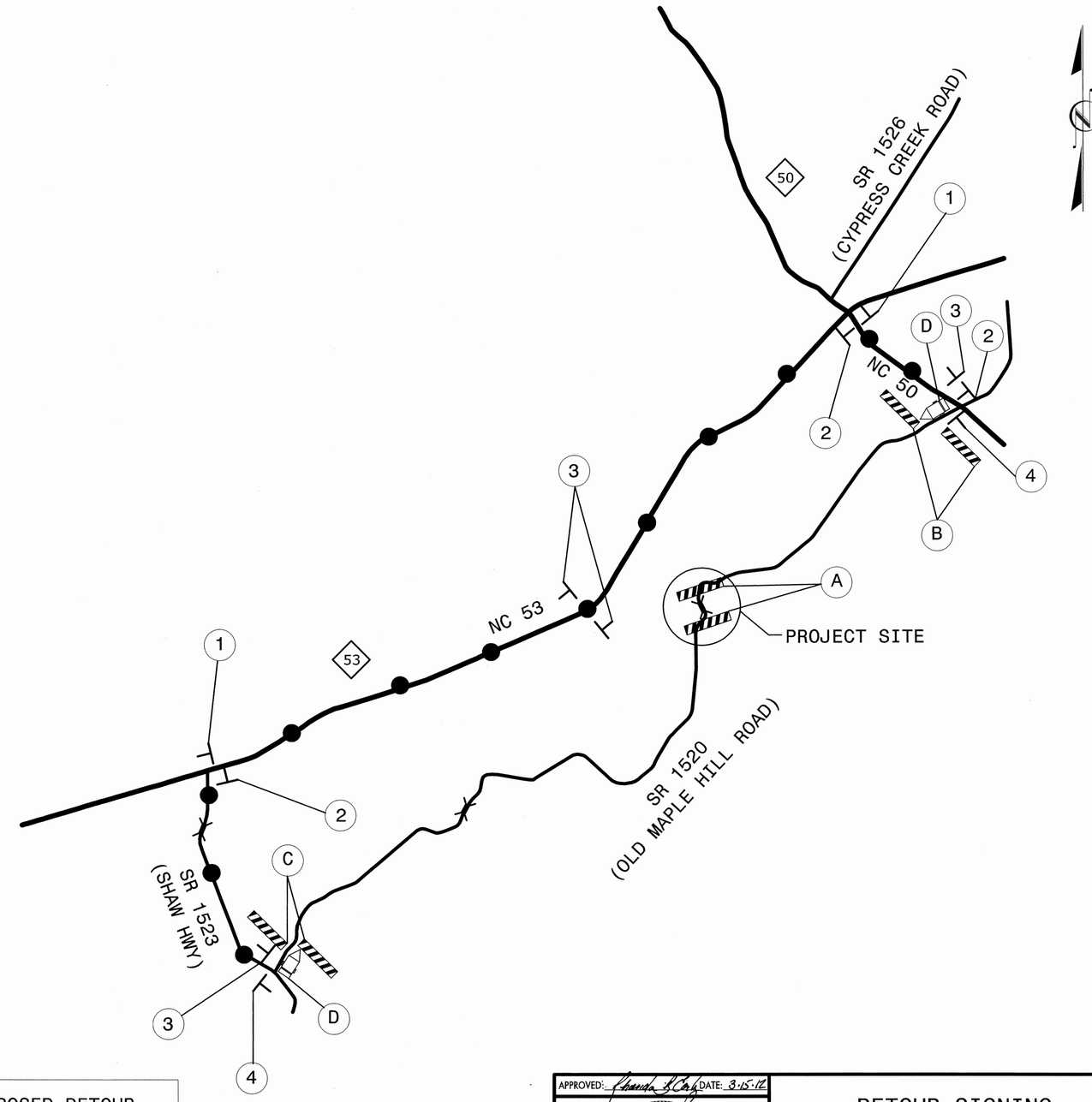

PROPOSED DETOUR

DETOUR ROUTE

DETOUR LENGTH 18.3 MILES

APPROVED: Rhonda B. Early DATE: 3-15-12

SEAL

NORTH CAROLINA PROFESSIONAL SEAL 023521 ENGINEER RHONDA B. EARLY

DETOUR SIGNING

SCALE:	NONE
DATE:	02/24/12
DWG. BY:	JAP
DESIGN BY:	JAP
REVIEWED BY:	RBE

REVISIONS

CADD FILE

$$$$$SYSTIME$$$$$
$$$$$USERNAME$$$$$

TIP PROJECT: BD-51030

STATE	STATE PROJECT REFERENCE NO.	SHEET NO.	TOTAL SHEETS
N.C.	BD-51030	EC-1	5

STATE PROJ. NO.	F. A. PROJ. NO.	DESCRIPTION

STATE OF NORTH CAROLINA
DIVISION OF HIGHWAYS

PLAN FOR PROPOSED
HIGHWAY EROSION CONTROL

LOCATION: BRIDGE NO. 117 OVER HOLLY SHELTER CREEK ON SR 1520 (OLD MAPLE HILL ROAD)

TYPE OF WORK: LOW IMPACT BRIDGE REPLACEMENT

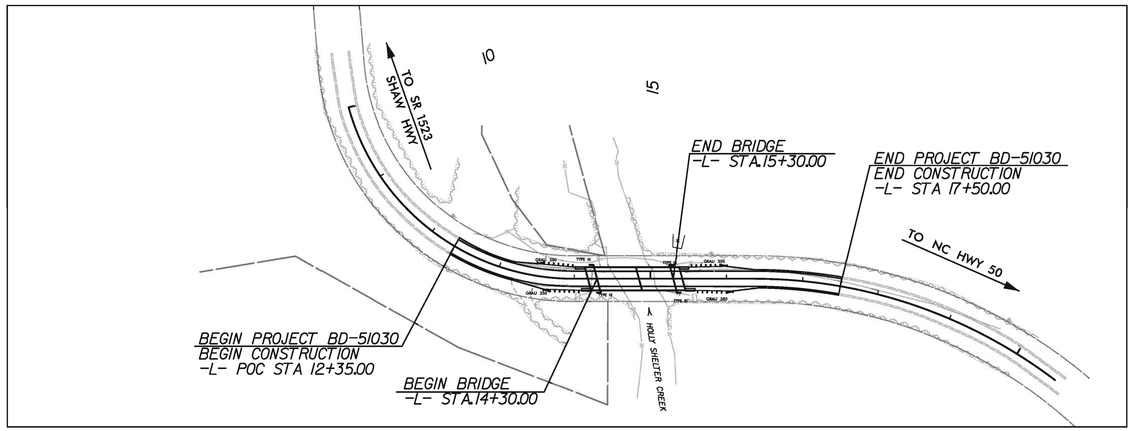

EROSION AND SEDIMENT CONTROL MEASURES

Std. #	Description	Symbol
1630.03	Temporary Silt Ditch	TSD
1630.05	Temporary Diversion	TD
1605.01	Temporary Silt Fence	
1606.01	Special Sediment Control Fence	
1622.01	Temporary Berms and Slope Drains	
	Silt Basin Type B	
1633.01	Temporary Rock Silt Check Type-A	
	Temporary Rock Silt Check Type-A with Matting and Polyacrylamide (PAM)	
	Temporary Rock Silt Check Type-B	
	Wattle / Coir Fiber Wattle	
	Wattle / Coir Fiber Wattle with Polyacrylamide (PAM)	
1634.01	Temporary Rock Sediment Dam Type-A	
1634.02	Temporary Rock Sediment Dam Type-B	
1635.01	Rock Pipe Inlet Sediment Trap Type-A	
1635.02	Rock Pipe Inlet Sediment Trap Type-B	
1630.04	Stilling Basin	
1630.06	Special Stilling Basin	
	Rock Inlet Sediment Trap:	
1632.01	Type A	A
1632.02	Type B	B
1632.03	Type C	C
	Skimmer Basin	
	Tiered Skimmer Basin	
	Infiltration Basin	

GRAPHIC SCALE

0
PLANS
0
PROFILE (HORIZONTAL)
0
PROFILE (VERTICAL)

ROADSIDE ENVIRONMENTAL UNIT
DIVISION OF HIGHWAYS
STATE OF NORTH CAROLINA

THESE EROSION AND SEDIMENT CONTROL PLANS COMPLY WITH THE REGULATIONS SET FORTH BY THE NCG-010000 GENERAL CONSTRUCTION PERMIT EFFECTIVE AUGUST 3, 2011 ISSUED BY THE NORTH CAROLINA DEPARTMENT OF ENVIRONMENT AND NATURAL RESOURCES DIVISION OF WATER QUALITY.

Prepared In the Office of:

HNTB NORTH CAROLINA, P.C.
343 E. Six Forks Road, Suite 200
Raleigh, North Carolina 27609
NC License No: C-1554

2012 STANDARD SPECIFICATIONS

PHILLIP E. ROGERS, P.E.
EROSION CONTROL
LEVEL III-A
CERTIFICATION #330

Roadway Standard Drawings

The following roadway english standards as appear in "Roadway Standard Drawings"- Roadway Design Unit - N. C. Department of Transportation - Raleigh, N. C., dated January 2012 and the latest revison thereto are applicable to this project and by reference hereby are considered a part of these plans.

1604.01	Railroad Erosion Control Detail	1632.01	Rock Inlet Sediment Trap Type A
1605.01	Temporary Silt Fence	1632.02	Rock Inlet Sediment Trap Type B
1606.01	Special Sediment Control Fence	1632.03	Rock Inlet Sediment Trap Type C
1607.01	Gravel Construction Entrance	1633.01	Temporary Rock Silt Check Type A
1622.01	Temporary Berms and Slope Drains	1633.02	Temporary Rock Silt Check Type B
1630.01	Riser Basin	1634.01	Temporary Rock Sediment Dam Type A
1630.02	Silt Basin Type B	1634.02	Temporary Rock Sediment Dam Type B
1630.03	Temporary Silt Ditch	1635.01	Rock Pipe Inlet Sediment Trap Type A
1630.04	Stilling Basin	1635.02	Rock Pipe Inlet Sediment Trap Type B
1630.05	Temporary Diversion	1640.01	Coir Fiber Baffle
1630.06	Special Stilling Basin	1645.01	Temporary Stream Crossing
1631.01	Matting Installation		

10:24:05 AM
$$$$USERNAME$$$$

PROJECT REFERENCE NO.	SHEET NO.
BD-51030	EC-2

COIR FIBER WATTLE DETAIL

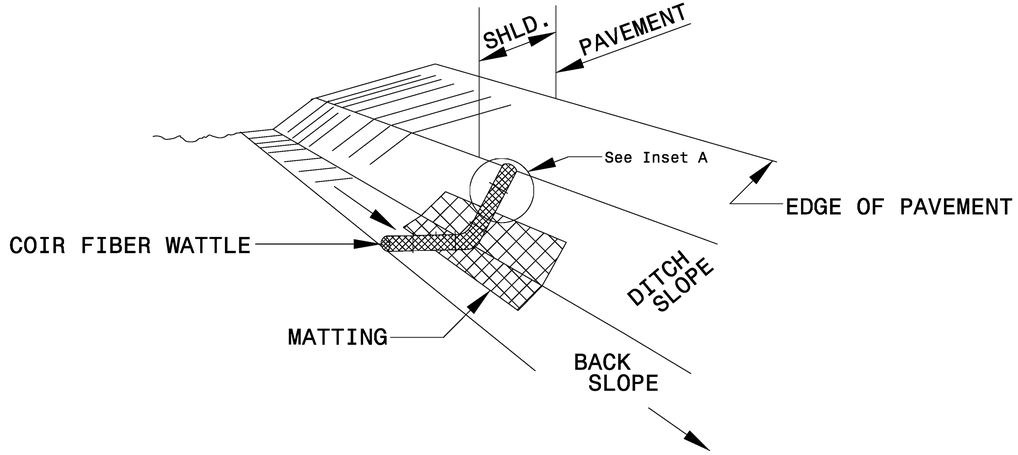

ISOMETRIC VIEW

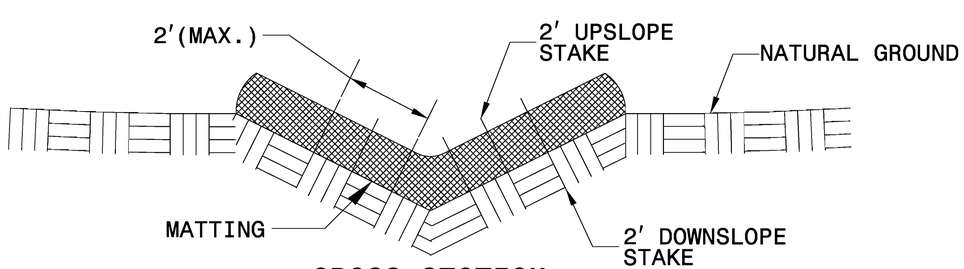

CROSS SECTION VEE DITCH

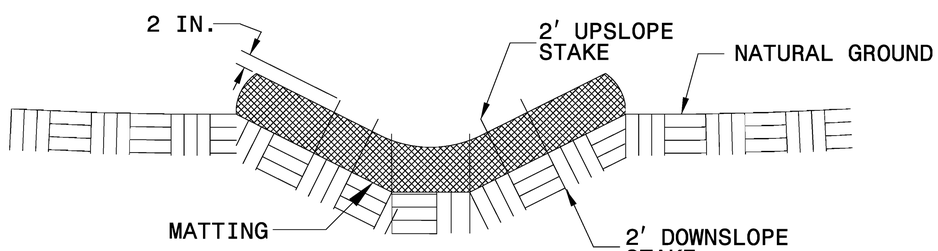

CROSS SECTION TRAPEZOIDAL DITCH

NOTES:

USE MINIMUM 12 IN. DIAMETER COIR FIBER (COCONUT FIBER) WATTLE.

USE 2 FT. WOODEN STAKES WITH A 2 IN. BY 2 IN. NOMINAL CROSS SECTION.

ONLY INSTALL WATTLE(S) TO A HEIGHT IN DITCH SO FLOW WILL NOT WASH AROUND WATTLE AND SCOUR DITCH SLOPES AND AS DIRECTED.

INSTALL A MINIMUM OF 2 UPSLOPE STAKES AND 4 DOWNSLOPE STAKES AT AN ANGLE TO WEDGE WATTLE TO BOTTOM OF DITCH.

PROVIDE STAPLES MADE OF 0.125 IN. DIAMETER STEEL WIRE FORMED INTO A U SHAPE NOT LESS THAN 12" IN LENGTH.

INSTALL STAPLES APPROXIMATELY EVERY 1 LINEAR FOOT ON BOTH SIDES OF WATTLE AND AT EACH END TO SECURE IT TO THE SOIL.

INSTALL MATTING IN ACCORDANCE WITH SECTION 1631 OF THE STANDARD SPECIFICATIONS.

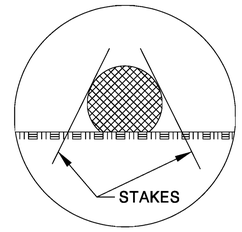

INSET A

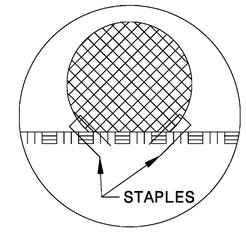

INSET B

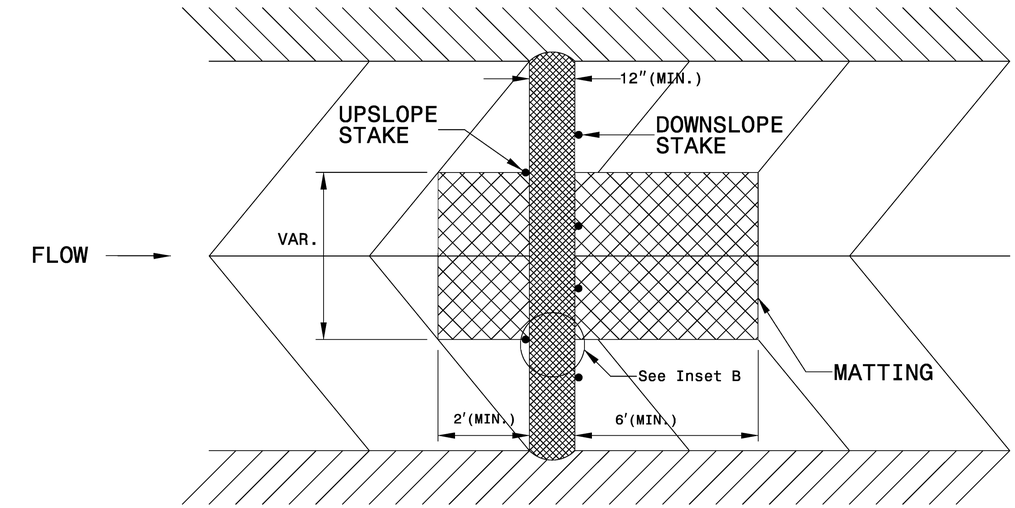

TOP VIEW

6/2/99

10:24:12 AM
\\BD51030_ec_detail.dgn
$$$$USERNAME$$$$

PROJECT REFERENCE NO.	SHEET NO.
BD-51030	EC-3

WATTLE
SILT FENCE BREAK DETAIL

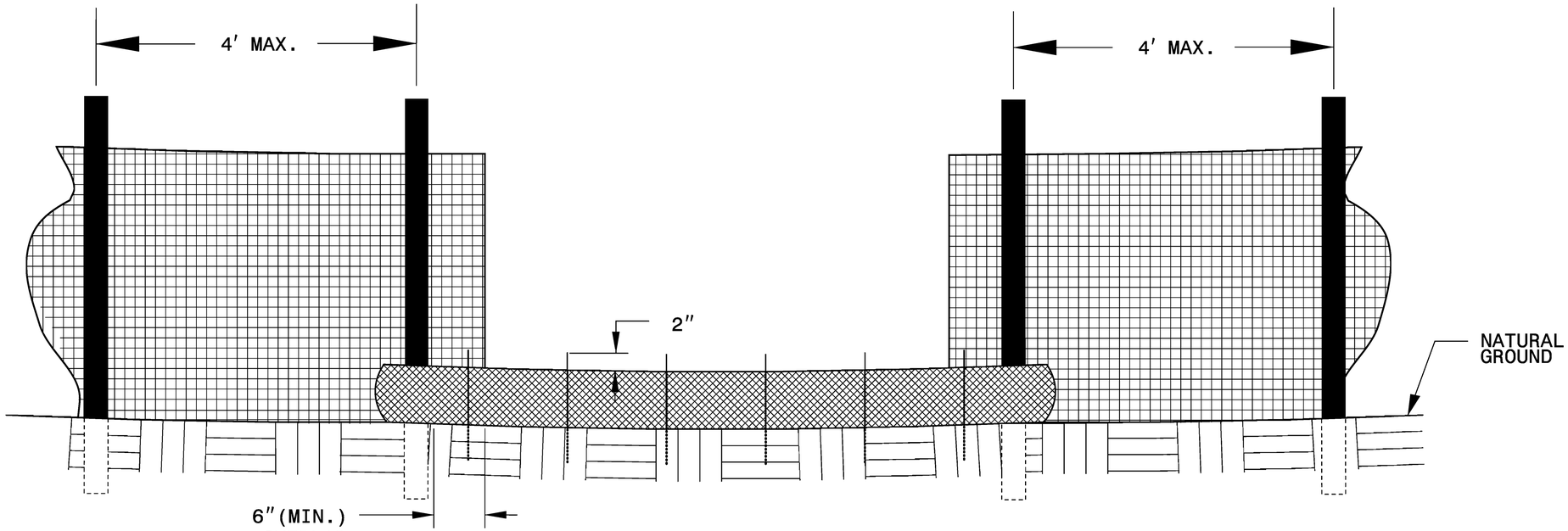

CROSS SECTION

NOTES:

INSTALL WATTLE WITH A 6″ OVERLAP OF SILT FENCE.

DO NOT USE WATTLES TREATED WITH PAM

USE MINIMUM 12 IN. DIAMETER, 10 FT. LENGTH
COIR FIBER (COCONUT FIBER) WATTLE.

USE 2 FT. WOODEN STAKES WITH A 2 IN. BY 2 IN. NOMINAL
CROSS SECTION.

INSTALL STAKES AT A MINIMUM SPACING OF 2′ AND INSERT
STAKES AT AN ANGLE TO WEDGE WATTLE TO BOTTOM OF DITCH.

PROVIDE STAPLES MADE OF 0.125 IN. DIAMETER STEEL WIRE
FORMED INTO A U SHAPE NOT LESS THAN 12″ IN LENGTH.

INSTALL STAPLES APPROXIMATELY EVERY 1 LINEAR FOOT ON
BOTH SIDES OF WATTLE AND AT EACH END TO SECURE IT TO THE SOIL.

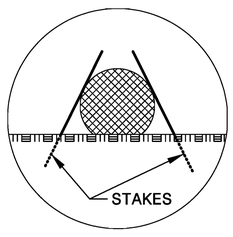

INSET A

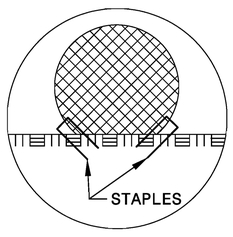

INSET B

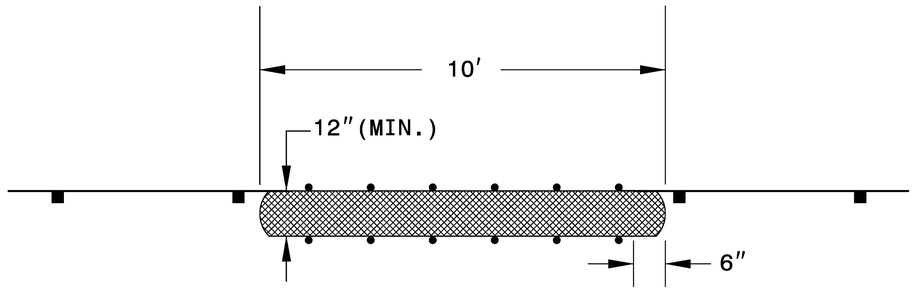

TOP VIEW

PROJECT REFERENCE NO.	SHEET NO.
BD-51030	EC-4

DIVISION OF HIGHWAYS
STATE OF NORTH CAROLINA

SOIL STABILIZATION TIMEFRAMES

SITE DESCRIPTION	STABILIZATION TIME	TIMEFRAME EXCEPTIONS
PERIMETER DIKES, SWALES, DITCHES AND SLOPES	7 DAYS	NONE
HIGH QUALITY WATER (HQW) ZONES	7 DAYS	NONE
SLOPES STEEPER THAN 3:1	7 DAYS	IF SLOPES ARE 10' OR LESS IN LENGTH AND ARE NOT STEEPER THAN 2:1, 14 DAYS ARE ALLOWED.
SLOPES 3:1 OR FLATTER	14 DAYS	7 DAYS FOR SLOPES GREATER THAN 50' IN LENGTH.
ALL OTHER AREAS WITH SLOPES FLATTER THAN 4:1	14 DAYS	NONE, EXCEPT FOR PERIMETERS AND HQW ZONES.

PLAN

HNTB NORTH CAROLINA, P.C.
343 E. Six Forks Road, Suite 200
Raleigh, North Carolina 27609
NC License No: C-1554

PROJECT REFERENCE NO.	SHEET NO.
BD-51030	EC-5
RW SHEET NO.	

ROADWAY DESIGN ENGINEER

HYDRAULICS ENGINEER

PHILLIP E. ROGERS, P.E.
EROSION CONTROL
LEVEL III-A
CERTIFICATION #330

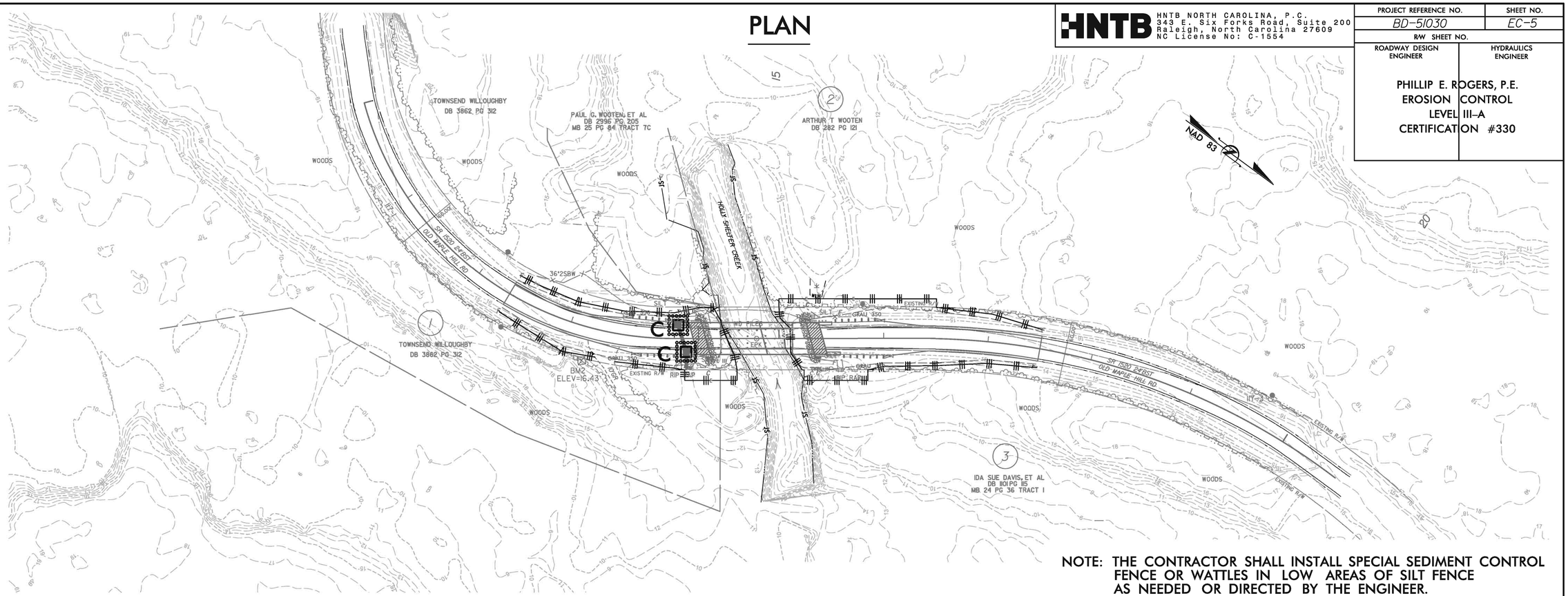

NOTE: THE CONTRACTOR SHALL INSTALL SPECIAL SEDIMENT CONTROL FENCE OR WATTLES IN LOW AREAS OF SILT FENCE AS NEEDED OR DIRECTED BY THE ENGINEER.

PROFILE

MATERIAL TO BE REMOVED

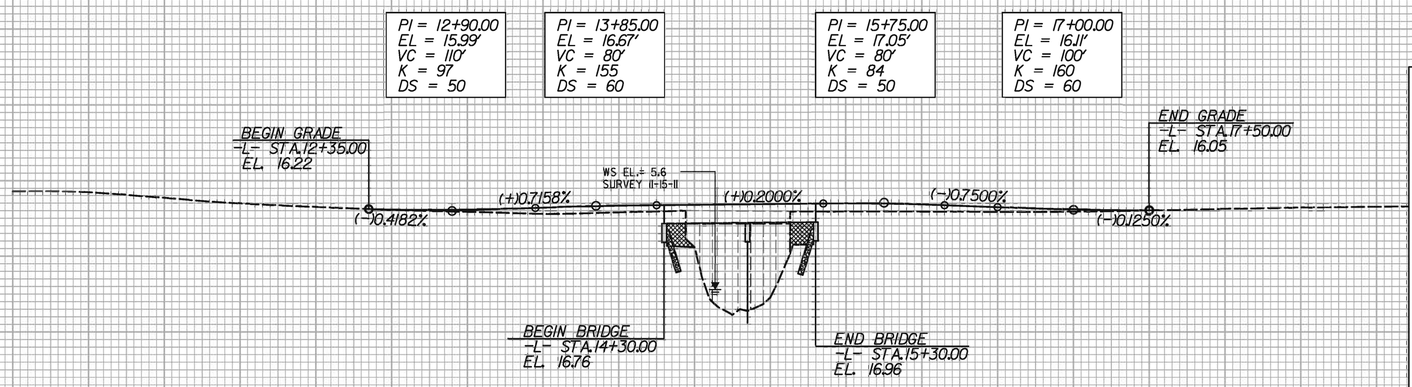

BRIDGE HYDRAULIC DATA

DESIGN DISCHARGE	= 4100	CFS
DESIGN FREQUENCY	= 25	YRS
DESIGN HW ELEVATION	= 15.1	FT
BASE DISCHARGE	= 8610	CFS
BASE FREQUENCY	= 100	YRS
BASE HW ELEVATION	= 20.25	FT
OVERTOPPING DISCHARGE	= 4340	CFS
OVERTOPPING FREQUENCY	= 25 (+)	YRS
OVERTOPPING ELEVATION	= 15.6	FT
DATE OF SURVEY	= 11-17-11	
W.S. ELEVATION AT DATE OF SURVEY	= 5.6	FT

30 20 10 0 -10

10+00 11+00 12+00 13+00 14+00 15+00 16+00 17+00 18+00

REVISIONS

3/15/2012
3:17:48 PM
...\BD51030_ec_psh.dgn

PROJ. REFERENCE NO.	SHEET NO.	TOTAL SHEETS
BD-51030	X-1	4

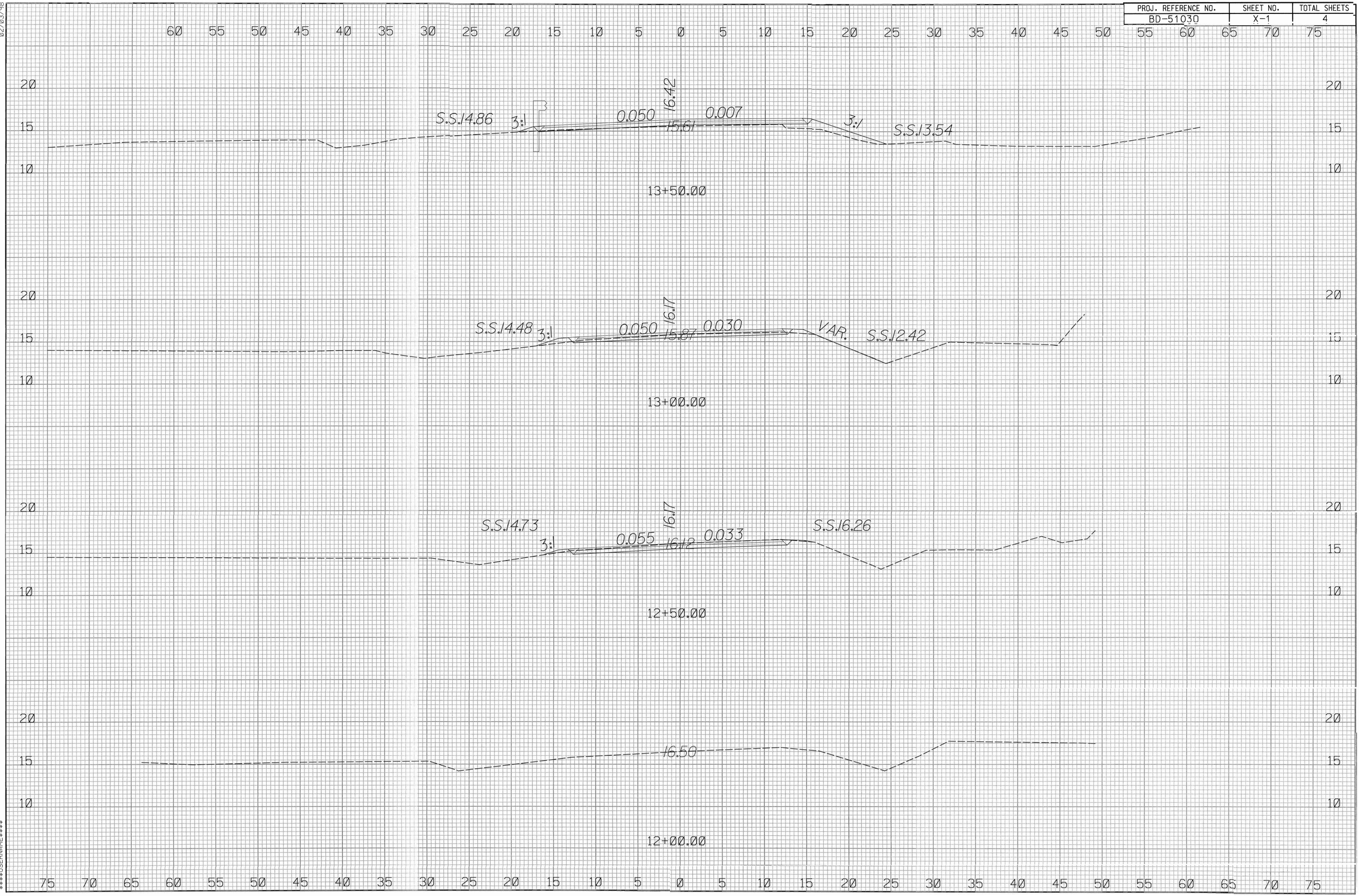

02/03/98

3:49:46 PM
$$$$USERNAME$$$$ X:\SC\BD51030_rdy_xpl.dgn

PROJ. REFERENCE NO.	SHEET NO.	TOTAL SHEETS
BD-51030	X-2	4

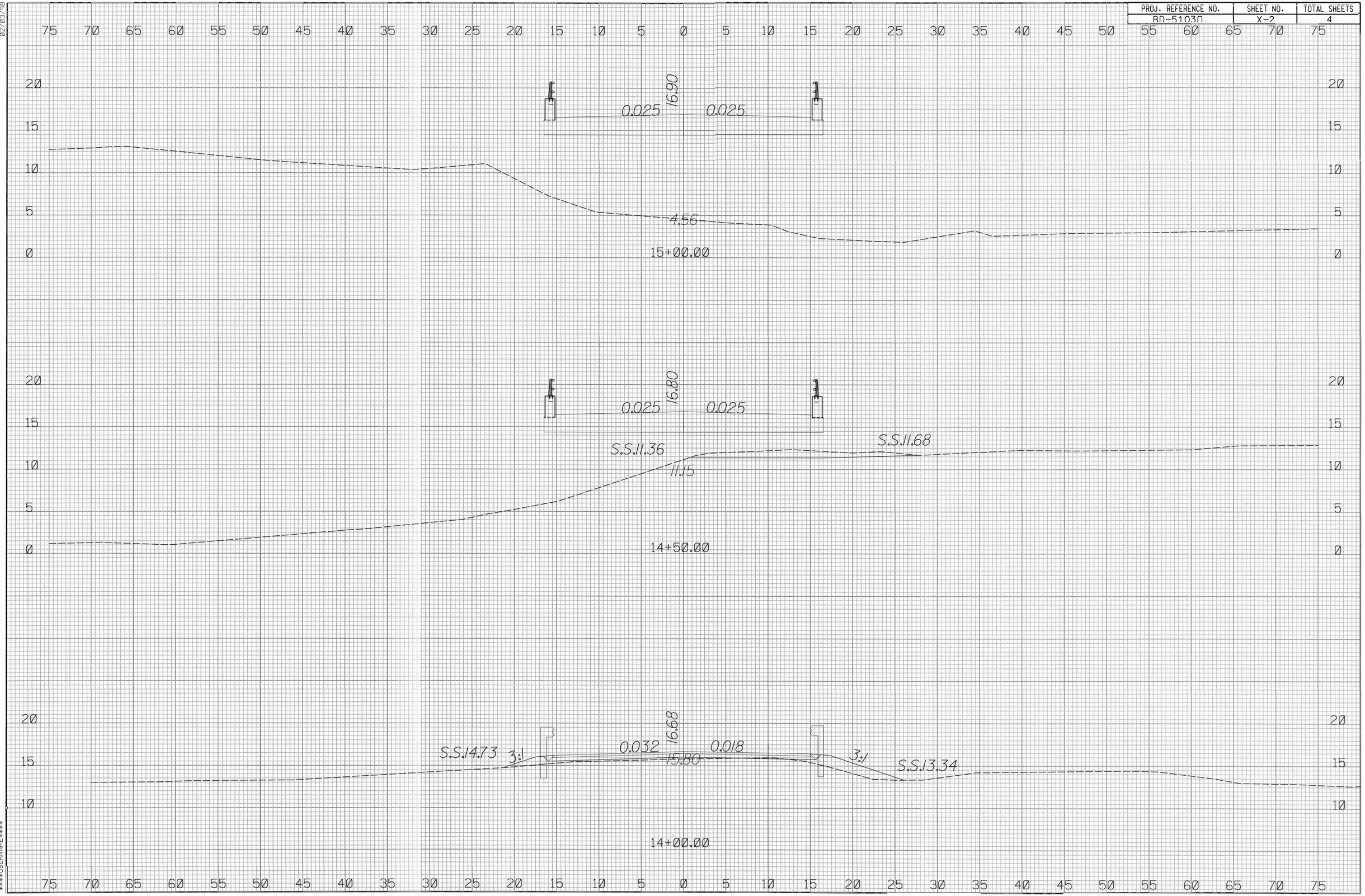

02/03/98

3:49:58 PM
\\XSC\BD51030_rdy_xpl.dgn
$$$$USERNAME$$$$

PROJ. REFERENCE NO.	SHEET NO.	TOTAL SHEETS
BD-51030	X-3	4

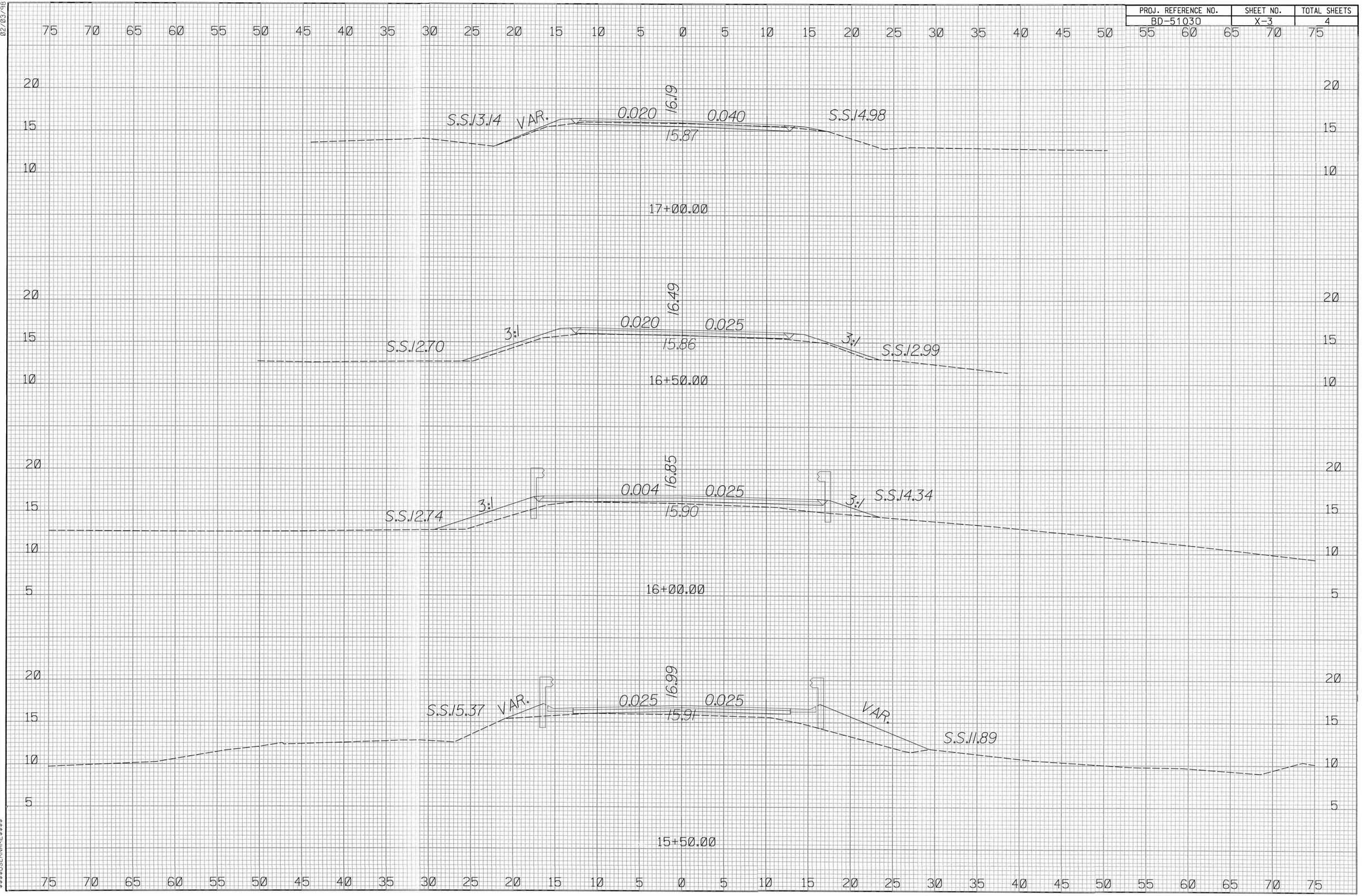

02/03/98

3:50:11 PM
\XSC\BD51030_rdy_xpl.dgn
$$$$USERNAME$$$$

PROJ. REFERENCE NO.	SHEET NO.	TOTAL SHEETS
BD-51030	X-4	4

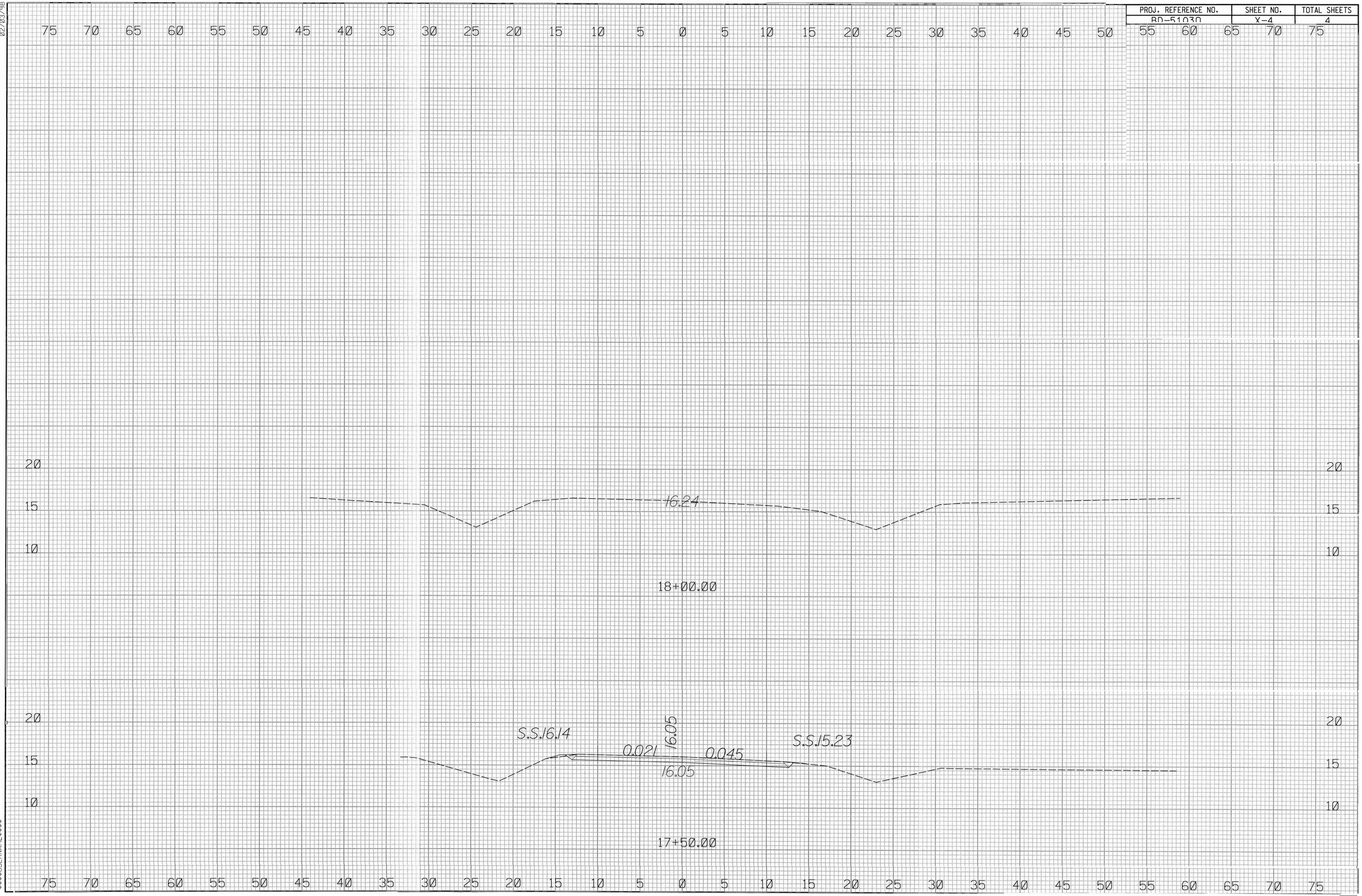

02/03/98

3:50:25 PM
$$$$USERNAME$$$$

F.A. PROJECT NO. BRZ-1520(17)

FOR GENERAL NOTES, SEE SHEET 2.

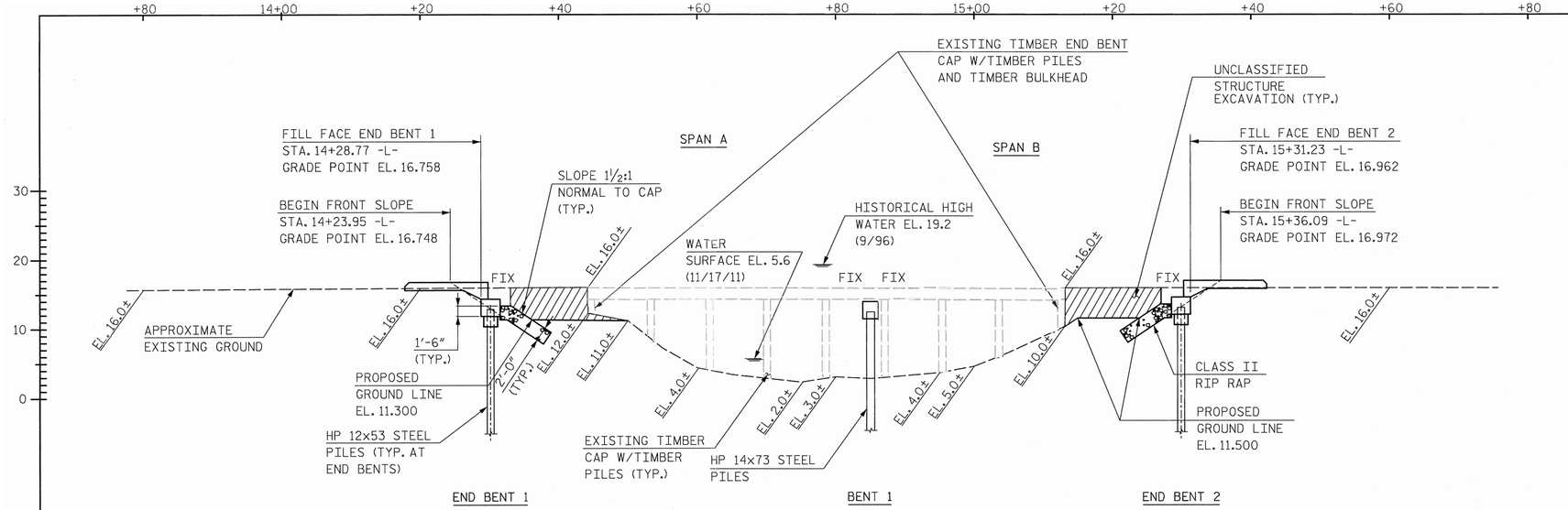

SECTION ALONG ℄ SURVEY -L-

BENTS ON SECTION AT RIGHT ANGLES TO BENTS

BRIDGE HYDRAULIC DATA

DESIGN DISCHARGE	=	4100 CFS
FREQUENCY OF DESIGN FLOOD	=	25 YR
DESIGN HIGH WATER ELEVATION	=	15.1 FT.
DRAINAGE AREA	=	105.8 SQ. MI.
BASIC DISCHARGE (Q100)	=	8610 CFS
BASIC HIGH WATER ELEVATION	=	20.25 FT.

OVERTOPPING FLOOD DATA

OVERTOPPING DISCHARGE	=	4340 CFS
FREQUENCY OF OVERTOPPING FLOOD	=	25 YR (+)
OVERTOPPING FLOOD ELEVATION	=	15.6 FT.

PI STA. = 13+85.00
ELEV = 16.670
V.C. = 80'

PI STA. = 15+75.00
ELEV = 17.050
V.C. = 80'

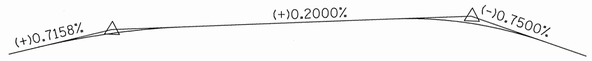

GRADE DATA -L-

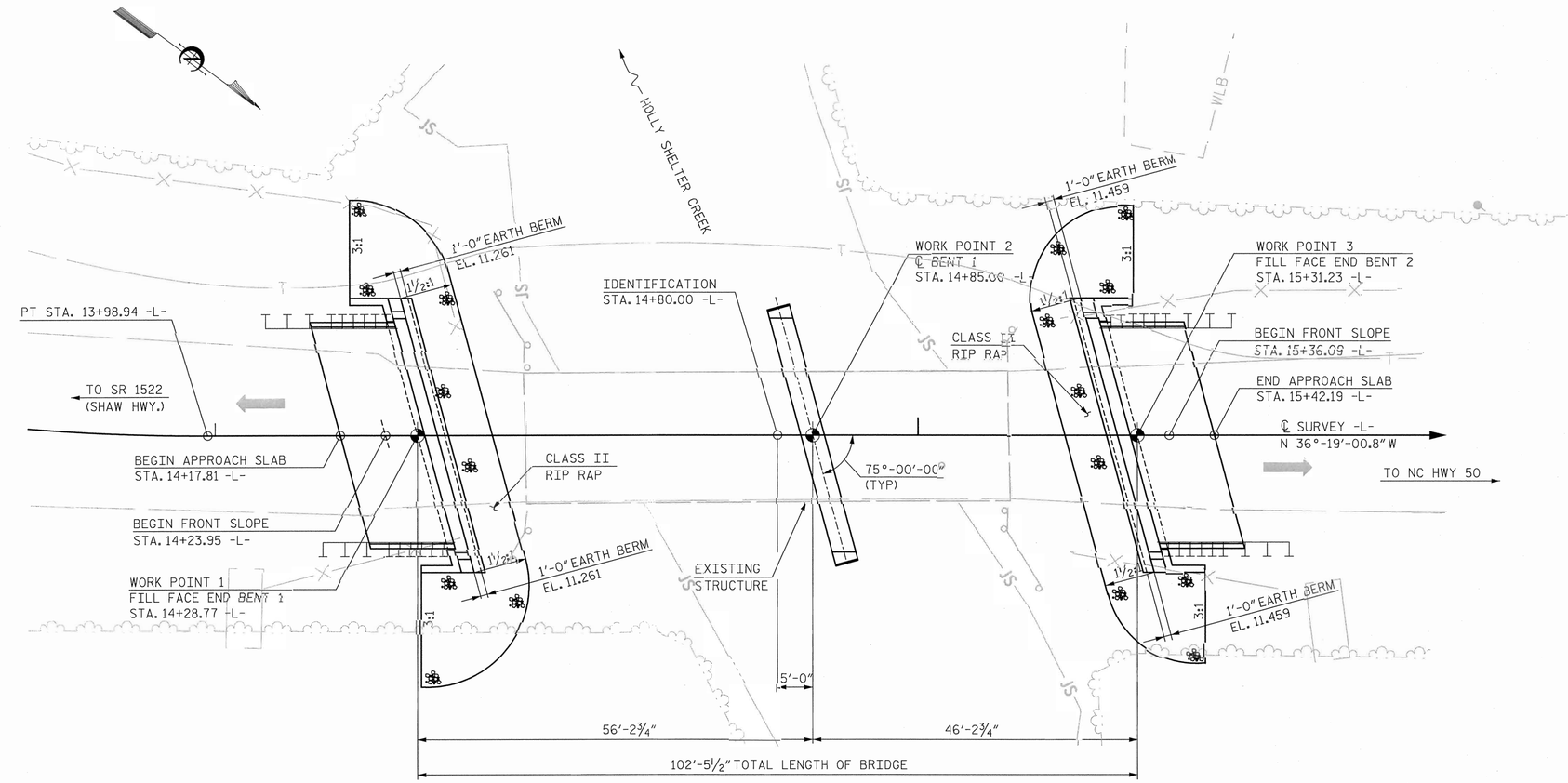

PLAN

NOTE: PILES NOT SHOWN
FOR CLARITY.

I HEREBY CERTIFY THESE PLANS
ARE AS-BUILT PLANS

PROJECT NO. BD-51030

PENDER COUNTY

STATION: 14+80.00 -L-

SHEET 1 OF 2 REPLACES BRIDGE NO. 117

NORTH CAROLINA PROFESSIONAL SEAL 12916 ENGINEER PAUL J. BARBER 3/15/12

HNTB

HNTB NORTH CAROLINA, P.C.
NC License No. C-1554
343 E. Six Forks Rd., Suite 200, Raleigh, N.C. 27609

DRAWN BY J. BAYNE DATE 2/12
CHECKED BY D. CAHAN DATE 2/12
DWG. NO. 1

STATE OF NORTH CAROLINA
DEPARTMENT OF TRANSPORTATION
RALEIGH

GENERAL DRAWING FOR BRIDGE ON SR 1520 OVER HOLLY SHELTER CREEK BETWEEN SR 1522 AND NC HWY 50

REVISIONS						SHEET NO.
NO.	BY	DATE	NO.	BY	DATE	S-1
1			3			TOTAL SHEETS
2			4			21

BM - BASELINE CAP "BL-1", STA. 10+87.76 -L-, ELEV 17.92

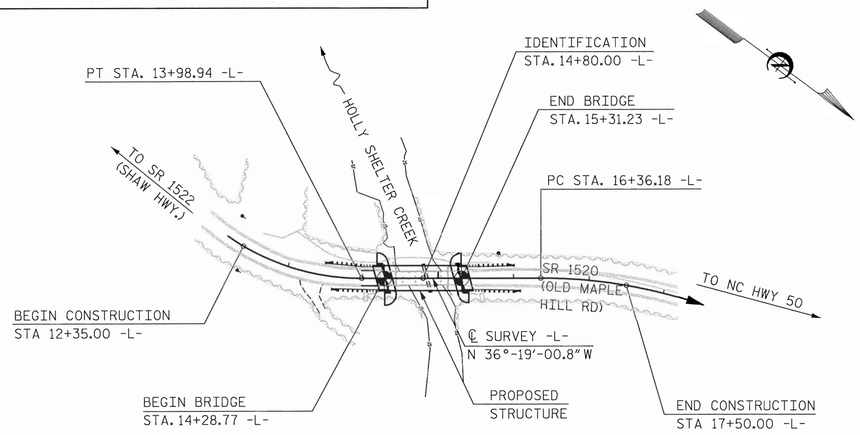

LOCATION SKETCH

FOR UTILITY INFORMATION, SEE UTILITY PLANS AND SPECIAL PROVISIONS.

FOUNDATION NOTES

FOR PILES, SEE SECTION 450 OF THE STANDARD SPECIFICATIONS.

PILES AT END BENT NO. 1 ARE DESIGNED FOR A FACTORED RESISTANCE OF 65 TONS PER PILE.

DRIVE PILES AT END BENT NO. 1 TO A REQUIRED DRIVING RESISTANCE OF 110 TONS PER PILE.

PILES AT BENT NO. 1 ARE DESIGNED FOR A FACTORED RESISTANCE OF 120 TONS PER PILE.

DRIVE PILES AT BENT NO. 1 TO A REQUIRED DRIVING RESISTANCE OF 230 TONS PER PILE. THIS REQUIRED DRIVING RESISTANCE INCLUDES ADDITIONAL RESISTANCE FOR DOWNDRAG OR SCOUR.

PILES AT END BENT NO. 2 ARE DESIGNED FOR A FACTORED RESISTANCE OF 75 TONS PER PILE.

DRIVE PILES AT END BENT NO. 2 TO A REQUIRED DRIVING RESISTANCE OF 125 TONS PER PILE.

INSTALL PILES AT BENT NO. 1 TO A TIP ELEVATION NO HIGHER THAN -33.0 FT.

THE SCOUR CRITICAL ELEVATION FOR BENT NO. 1 IS ELEVATION -10.0 FT. SCOUR CRITICAL ELEVATIONS ARE USED TO MONITOR POSSIBLE SCOUR PROBLEMS DURING THE LIFE OF THE STRUCTURE.

STEEL PIPE PILE CUTTING SHOES ARE REQUIRED FOR STEEL PIPE PILES AT BENT NO. 1. FOR STEEL PILE POINTS, SEE SECTION 450 OF THE STANDARD SPECIFICATIONS.

IT HAS BEEN ESTIMATED THAT A HAMMER WITH AN EQUIVALENT RATED ENERGY IN THE RANGE OF 30 TO 45 FT-KIPS PER BLOW WILL BE REQUIRED TO DRIVE PILES AT END BENT NO. 1 AND END BENT NO. 2. THIS ESTIMATED ENERGY RANGE DOES NOT RELEASE THE CONTRACTOR FROM PROVIDING DRIVING EQUIPMENT IN ACCORDANCE WITH SUBARTICLE 450-3(D)(2) OF THE STANDARD SPECIFICATIONS.

IT HAS BEEN ESTIMATED THAT A HAMMER WITH AN EQUIVALENT RATED ENERGY IN THE RANGE OF 40 TO 65 FT-KIPS PER BLOW WILL BE REQUIRED TO DRIVE PILES AT BENT NO. 1. THIS ESTIMATED ENERGY RANGE DOES NOT RELEASE THE CONTRACTOR FROM PROVIDING DRIVING EQUIPMENT IN ACCORDANCE WITH SUBARTICLE 450-3(D)(2) OF THE STANDARD SPECIFICATIONS.

TESTING THE FIRST PRODUCTION PILE WITH THE PDA DURING DRIVING, RESTRIKING OR REDRIVING IS REQUIRED AT BENT NO. 1. FOR PDA TESTING, SEE SECTION 450 OF THE STANDARD SPECIFICATIONS.

TOTAL BILL OF MATERIAL

	REMOVAL OF EXISTING STRUCTURE AT STATION 14+80.00 -L-	PDA TESTING	UNCLASSIFIED STRUCTURE EXCAVATION AT STATION 14+80.00 -L-	CLASS A CONCRETE	BRIDGE APPROACH SLABS, STA. 14+80.00 -L-	REINFORCING STEEL	HP 12x53 STEEL PILES		PP 18x0.5 GALVANIZED STEEL PILES		STEEL PILE POINTS	PILE REDRIVES	TWO BAR METAL RAIL	1'-2" x 2'-10" CONCRETE PARAPET	RIP RAP CLASS II (2'-0" THICK)	GEOTEXTILE FOR DRAINAGE	ELASTOMERIC BEARINGS	3'-0"x1'-9" PRESTRESSED CONCRETE CORED SLABS	
	LUMP SUM	EACH	LUMP SUM	CU. YDS.	LUMP SUM	LBS.	NO.	LIN. FT.	NO.	LIN. FT.	EACH	EACH	LIN. FT.	LIN. FT.	TONS	SQ. YDS.	LUMP SUM	NO.	LIN. FT.
SUPERSTRUCTURE	LUMP SUM	———	———	———	LUMP SUM	———	—	———	—	———	———	———	185.25	200.25	———	———	LUMP SUM	22	1,100
END BENT NO. 1	———	———	LUMP SUM	14.6	———	2,193	7	420	—	———	———	4	———	———	70	75	———	—	———
BENT NO. 1	———	1	———	11.1	———	2,263	—	———	7	490	7	4	———	———	———	———	———	—	———
END BENT NO. 2	———	———	LUMP SUM	14.6	———	2,193	7	420	—	———	———	4	———	———	70	75	———	—	———
TOTAL	LUMP SUM	1	LUMP SUM	40.3	LUMP SUM	6,649	14	840	7	490	7	12	185.25	200.25	140	150	LUMP SUM	22	1,100

GENERAL NOTES

ASSUMED LIVE LOAD = HL-93 OR ALTERNATE LOADING.

FOR OTHER DESIGN DATA AND GENERAL NOTES, SEE SHEET SN.

FOR EROSION CONTROL MEASURES SEE EROSION CONTROL PLANS.

THIS BRIDGE HAS BEEN DESIGNED IN ACCORDANCE WITH THE REQUIREMENTS OF THE AASHTO LRFD BRIDGE DESIGN SPECIFICATIONS.

THE EXISTING 8 SPAN STRUCTURE WITH SPAN LENGTHS OF 9'-0", 8'-3" 2 @ 8'-8", 8'-6", 8'-4", 7'-11" AND 9'-10" WITH 10 TIMBER JOISTS SUPPORTING TIMBER DECKING AND BITUMINOUS WEARING SURFACE WITH A 19'-2" CLEAR ROADWAY WIDTH ON TIMBER CAP AND TIMBER PILES SHALL BE REMOVED. IN ADDITION, ANY PILES REMAINING FROM PREVIOUS BRIDGE CONSTRUCTION OR MAINTENANCE OPERATIONS SHALL BE REMOVED AND INCLUDED IN THE LUMP SUM PAY ITEM FOR "REMOVAL OF EXISTING STRUCTURE AT STATION 14+80.00 -L-".

REMOVAL OF THE EXISTING BRIDGE SHALL BE PERFORMED SO AS NOT TO ALLOW DEBRIS TO FALL INTO THE WATER. THE CONTRACTOR SHALL REMOVE THE BRIDGE AND SUBMIT PLANS FOR DEMOLITION IN ACCORDANCE WITH ARTICLE 402-2 OF THE STANDARD SPECIFICATIONS.

THE MATERIAL SHOWN IN THE CROSS-HATCHED AREA SHALL BE EXCAVATED FOR A DISTANCE OF 19.5 FT EACH SIDE OF CENTERLINE ROADWAY AS DIRECTED BY THE ENGINEER. THIS WORK WILL BE PAID FOR AT THE CONTRACT LUMP SUM PRICE FOR UNCLASSIFIED STRUCTURE EXCAVATION. SEE SECTION 412 OF THE STANDARD SPECIFICATIONS.

THE SUBSTRUCTURE OF THE EXISTING BRIDGE INDICATED ON THE PLANS IS FROM THE BEST INFORMATION AVAILABLE. SINCE THIS INFORMATION IS SHOWN FOR THE CONVENIENCE OF THE CONTRACTOR, THE CONTRACTOR SHALL HAVE NO CLAIM WHATSOEVER AGAINST THE DEPARTMENT OF TRANSPORTATION FOR ANY DELAYS OR ADDITIONAL COST INCURRED BASED ON DIFFERENCES BETWEEN THE EXISTING BRIDGE SUBSTRUCTURE SHOWN ON THE PLANS AND THE ACTUAL CONDITIONS AT THE PROJECT SITE.

ASPHALT WEARING SURFACE IS INCLUDED IN ROADWAY QUANTITY ON ROADWAY PLANS.

THIS STRUCTURE HAS BEEN DESIGNED IN ACCORDANCE WITH HEC 18, "EVALUATING SCOUR AT BRIDGES" MAY, 2001

THE CONTRACTOR SHALL PROVIDE INDEPENDENT ASSURANCE SAMPLES OF REINFORCING STEEL AS FOLLOWS: FOR PROJECTS REQUIRING UP TO 400 TONS OF REINFORCING STEEL, ONE 30 INCH SAMPLE OF EACH SIZE BAR USED, AND FOR PROJECTS REQUIRING OVER 400 TONS OF REINFORCING STEEL, TWO 30 INCH SAMPLES OF EACH SIZE BAR USED. THE BARS FROM WHICH THE SAMPLES ARE TAKEN MUST THEN BE SPLICED WITH REPLACEMENT BARS OF THE SIZE AND LENGTH OF THE SAMPLE PLUS A MINIMUM LAP SPLICE OF THIRTY BAR DIAMETERS. PAYMENT FOR THE SAMPLES OF REINFORCING STEEL SHALL BE CONSIDERED INCIDENTAL TO VARIOUS PAY ITEMS.

FOR SUBMITTAL OF WORKING DRAWINGS, SEE SPECIAL PROVISIONS.

FOR FALSEWORK AND FORMWORK, SEE SPECIAL PROVISIONS.

THIS BRIDGE SHALL BE CONSTRUCTED USING TOP-DOWN CONSTRUCTION METHODS. THE USE OF A TEMPORARY CAUSEWAY OR WORK BRIDGE IS NOT PERMITTED. CONTRACTOR SHALL NOT PLACE OR OPERATE CRANE ON SPAN A.

FOR CRANE SAFETY, SEE SPECIAL PROVISIONS.

FOR GROUT FOR STRUCTURES, SEE SPECIAL PROVISIONS.

THIS BRIDGE IS LOCATED IN SEISMIC ZONE 1.

NORTH CAROLINA PROFESSIONAL SEAL 12916 ENGINEER PAUL J. BARBER 9/5/12

PROJECT NO. BD-51030

PENDER COUNTY

STATION: 14+80.00 -L-

SHEET 2 OF 2

STATE OF NORTH CAROLINA
DEPARTMENT OF TRANSPORTATION
RALEIGH

GENERAL DRAWING
FOR BRIDGE ON SR 1520
OVER HOLLY SHELTER CREEK
BETWEEN SR 1522
AND NC HIGHWAY 50

HNTB NORTH CAROLINA, P.C.
NC License No. C-1554
343 E. Six Forks Rd., Suite 200, Raleigh, N.C. 27609

DRAWN BY J. BAYNE DATE 2/12
CHECKED BY D. RAGAN DATE 2/12
DWG. NO. 2

REVISIONS						SHEET NO.
NO.	BY	DATE	NO.	BY	DATE	S-2
1			3			TOTAL SHEETS
2			4			21

LOAD AND RESISTANCE FACTOR RATING (LRFD) SUMMARY FOR PRESTRESSED CONCRETE GIRDERS

LEVEL		VEHICLE	WEIGHT (W) (TONS)	CONTROLLING LOAD RATING	MINIMUM RATING FACTORS (RF)	TONS = W X RF	STRENGTH I LIMIT STATE										SERVICE III LIMIT STATE						COMMENT NUMBER
								MOMENT					SHEAR						MOMENT					
							LIVELOAD FACTORS	DISTRIBUTION FACTORS (DF)	RATING FACTOR	SPAN	GIRDER LOCATION	DISTANCE FROM LEFT END OF SPAN (ft)	DISTRIBUTION FACTORS (DF)	RATING FACTOR	SPAN	GIRDER LOCATION	DISTANCE FROM LEFT END OF SPAN (ft)	LIVELOAD FACTORS	DISTRIBUTION FACTORS (DF)	RATING FACTOR	SPAN	GIRDER LOCATION	DISTANCE FROM LEFT END OF SPAN (ft)	
DESIGN LOAD RATING		HL-93(Inv)	N/A	1	1.065	--	1.75	0.27	1.25	55′	EL	26.982	0.616	1.12	55′	EL	5.396	0.80	0.27	**1.07**	55′	EL	**26.982**	
		HL-93(Opr)	N/A	--	1.452	--	1.35	0.27	1.61	55′	EL	26.982	0.616	1.45	55′	EL	5.396	N/A	--	--	--	--	--	
		HS-20(Inv)	36.000	2	1.335	48.043	1.75	0.27	1.56	55′	EL	26.982	0.616	1.34	55′	EL	5.396	0.80	0.27	**1.33**	55′	EL	**26.982**	
		HS-20(Opr)	36.000	--	1.734	62.425	1.35	0.27	2.02	55′	EL	26.982	0.616	1.73	55′	EL	5.396	N/A	--	--	--	--	--	
LEGAL LOAD RATING	SV	SNSH	13.500	--	2.802	37.83	1.4	0.27	4.09	55′	EL	26.982	0.616	3.81	55′	EL	5.396	0.80	0.27	2.80	55′	EL	26.982	
		SNGARBS2	20.000	--	2.175	43.506	1.4	0.27	3.18	55′	EL	26.982	0.616	2.76	55′	EL	5.396	0.80	0.27	2.18	55′	EL	26.982	
		SNAGRIS2	22.000	--	2.099	46.173	1.4	0.27	3.07	55′	EL	26.982	0.616	2.58	55′	EL	5.396	0.80	0.27	2.10	55′	EL	26.982	
		SNCOTTS3	27.250	--	1.397	38.065	1.4	0.27	2.04	55′	EL	26.982	0.616	1.91	55′	EL	5.396	0.80	0.27	1.40	55′	EL	26.982	
		SNAGGRS4	34.925	--	1.2	41.922	1.4	0.27	1.75	55′	EL	26.982	0.616	1.62	55′	EL	5.396	0.80	0.27	1.20	55′	EL	26.982	
		SNS5A	35.550	--	1.172	41.648	1.4	0.27	1.71	55′	EL	26.982	0.616	1.66	55′	EL	5.396	0.80	0.27	1.17	55′	EL	26.982	
		SNS6A	39.950	--	1.089	43.514	1.4	0.27	1.59	55′	EL	26.982	0.616	1.53	55′	EL	5.396	0.80	0.27	1.09	55′	EL	26.982	
		SNS7B	42.000	--	1.038	43.587	1.4	0.27	1.52	55′	EL	26.982	0.616	1.53	55′	EL	5.396	0.80	0.27	1.04	55′	EL	26.982	
	TTST	TNAGRIT3	33.000	--	1.333	43.973	1.4	0.27	1.95	55′	EL	26.982	0.616	1.81	55′	EL	5.396	0.80	0.27	1.33	55′	EL	26.982	
		TNT4A	33.075	--	1.342	44.4	1.4	0.27	1.96	55′	EL	26.982	0.616	1.75	55′	EL	5.396	0.80	0.27	1.34	55′	EL	26.982	
		TNT6A	41.600	--	1.112	46.252	1.4	0.27	1.62	55′	EL	26.982	0.616	1.67	55′	EL	5.396	0.80	0.27	1.11	55′	EL	26.982	
		TNT7A	42.000	--	1.125	47.255	1.4	0.27	1.64	55′	EL	26.982	0.616	1.56	55′	EL	5.396	0.80	0.27	1.13	55′	EL	26.982	
		TNT7B	42.000	--	1.174	49.318	1.4	0.27	1.72	55′	EL	26.982	0.616	1.47	55′	EL	5.396	0.80	0.27	1.17	55′	EL	26.982	
		TNAGRIT4	43.000	--	1.111	47.786	1.4	0.27	1.62	55′	EL	26.982	0.616	1.42	55′	EL	5.396	0.80	0.27	1.11	55′	EL	26.982	
		TNAGT5A	45.000	--	1.041	46.851	1.4	0.27	1.52	55′	EL	26.982	0.616	1.44	55′	EL	5.396	0.80	0.27	1.04	55′	EL	26.982	
		TNAGT5B	45.000	3	1.023	46.02	1.4	0.27	1.49	55′	EL	26.982	0.616	1.35	55′	EL	5.396	0.80	0.27	**1.02**	55′	EL	**26.982**	

LOAD FACTORS:

DESIGN LOAD RATING FACTORS	LIMIT STATE	γ_{DC}	γ_{DW}
	STRENGTH I	1.25	1.50
	SERVICE III	1.00	1.00

NOTES:

MINIMUM RATING FACTORS ARE BASED ON THE STRENGTH I AND SERVICE III LIMIT STATES.

ALLOWABLE STRESSES FOR SERVICE III LIMIT STATE ARE AS REQUIRED FOR DESIGN.

COMMENTS:

1.
2.
3.
4.

(#) CONTROLLING LOAD RATING

(1) DESIGN LOAD RATING (HL-93)

(2) DESIGN LOAD RATING (HS-20)

(3) LEGAL LOAD RATING **

** SEE CHART FOR VEHICLE TYPE

GIRDER LOCATION

I - INTERIOR GIRDER
EL - EXTERIOR LEFT GIRDER
ER - EXTERIOR RIGHT GIRDER

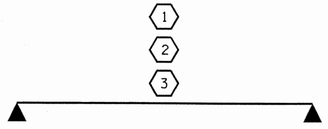

LRFR SUMMARY

FOR SPAN 'A'

PROJECT NO. BD-51030

PENDER COUNTY

STATION: 14+80.00 -L-

STATE OF NORTH CAROLINA
DEPARTMENT OF TRANSPORTATION
RALEIGH

STANDARD
LRFR SUMMARY FOR
55′ CORED SLAB UNIT
75° SKEW & 105° SKEW
(NON-INTERSTATE TRAFFIC)

REVISIONS						SHEET NO.
NO.	BY:	DATE:	NO.	BY:	DATE:	5-3
1			3			TOTAL SHEETS
2			4			21

NORTH CAROLINA PROFESSIONAL SEAL 025515 ENGINEER EMILY E. MURRAY

3/6/12

ASSEMBLED BY : E. K. POPE	DATE : 2-17-12
CHECKED BY : E. E. MURRAY	DATE : 3-5-12
DRAWN BY : CVC 6/10	
CHECKED BY : DNS 6/10	

06-MAR-2012 15:08
S:\DPG1\Emily\BDProjects\BD-51030\BD51030_SD_CS.dgn
emurray

STD. NO. 21LRFR1_75&105S_55L

LOAD AND RESISTANCE FACTOR RATING (LRFD) SUMMARY FOR PRESTRESSED CONCRETE GIRDERS

LEVEL		VEHICLE	WEIGHT (W) (TONS)	CONTROLLING LOAD RATING	MINIMUM RATING FACTORS (RF)	TONS = W X RF	STRENGTH I LIMIT STATE										SERVICE III LIMIT STATE						COMMENT NUMBER
								MOMENT					SHEAR					MOMENT						
							LIVELOAD FACTORS	DISTRIBUTION FACTORS (DF)	RATING FACTOR	SPAN	GIRDER LOCATION	DISTANCE FROM LEFT END OF SPAN (ft)	DISTRIBUTION FACTORS (DF)	RATING FACTOR	SPAN	GIRDER LOCATION	DISTANCE FROM LEFT END OF SPAN (ft)	LIVELOAD FACTORS	DISTRIBUTION FACTORS (DF)	RATING FACTOR	SPAN	GIRDER LOCATION	DISTANCE FROM LEFT END OF SPAN (ft)	
DESIGN LOAD RATING		HL-93(Inv)	N/A	1	1.098	--	1.75	0.272	1.36	45′	EL	21.982	0.617	1.46	45′	EL	35.172	0.80	0.272	**1.10**	45′	EL	**21.982**	
		HL-93(Opr)	N/A	--	1.764	--	1.35	0.272	1.76	45′	EL	21.982	0.617	1.89	45′	EL	35.172	N/A	--	--	--	--	--	
		HS-20(Inv)	36.000	2	1.347	48.507	1.75	0.272	1.67	45′	EL	21.982	0.617	1.68	45′	EL	8.793	0.80	0.272	**1.35**	45′	EL	**21.982**	
		HS-20(Opr)	36.000	--	2.165	77.938	1.35	0.272	2.16	45′	EL	21.982	0.617	2.17	45′	EL	8.793	N/A	--	--	--	--	--	
LEGAL LOAD RATING	SV	SNSH	13.500	--	2.632	35.536	1.4	0.272	4.08	45′	EL	21.982	0.617	4.43	45′	EL	35.172	0.80	0.272	2.63	45′	EL	21.982	
		SNGARBS2	20.000	--	2.126	42.513	1.4	0.272	3.29	45′	EL	21.982	0.617	3.32	45′	EL	35.172	0.80	0.272	2.13	45′	EL	21.982	
		SNAGRIS2	22.000	--	2.085	45.877	1.4	0.272	3.19	45′	EL	17.586	0.617	3.15	45′	EL	35.172	0.80	0.272	2.09	45′	EL	21.982	
		SNCOTTS3	27.250	--	1.314	35.814	1.4	0.272	2.04	45′	EL	21.982	0.617	2.23	45′	EL	8.793	0.80	0.272	1.31	45′	EL	21.982	
		SNAGGRS4	34.925	--	1.16	40.51	1.4	0.272	1.8	45′	EL	21.982	0.617	1.97	45′	EL	35.172	0.80	0.272	1.16	45′	EL	21.982	
		SNS5A	35.550	--	1.13	40.167	1.4	0.272	1.75	45′	EL	21.982	0.617	2.06	45′	EL	8.793	0.80	0.272	1.13	45′	EL	21.982	
		SNS6A	39.950	--	1.064	42.522	1.4	0.272	1.65	45′	EL	21.982	0.617	1.94	45′	EL	35.172	0.80	0.272	1.06	45′	EL	21.982	
		SNS7B	42.000	3	1.015	42.617	1.4	0.272	1.57	45′	EL	21.982	0.617	1.98	45′	EL	35.172	0.80	0.272	**1.01**	45′	EL	**21.982**	
	TTST	TNAGRIT3	33.000	--	1.306	43.112	1.4	0.272	2.02	45′	EL	21.982	0.617	2.26	45′	EL	8.793	0.80	0.272	1.31	45′	EL	21.982	
		TNT4A	33.075	--	1.32	43.663	1.4	0.272	2.05	45′	EL	21.982	0.617	2.14	45′	EL	35.172	0.80	0.272	1.32	45′	EL	21.982	
		TNT6A	41.600	--	1.108	46.093	1.4	0.272	1.72	45′	EL	21.982	0.617	2.11	45′	EL	35.172	0.80	0.272	1.11	45′	EL	21.982	
		TNT7A	42.000	--	1.129	47.436	1.4	0.272	1.75	45′	EL	21.982	0.617	1.96	45′	EL	35.172	0.80	0.272	1.13	45′	EL	21.982	
		TNT7B	42.000	--	1.176	49.384	1.4	0.272	1.82	45′	EL	21.982	0.617	1.88	45′	EL	35.172	0.80	0.272	1.18	45′	EL	21.982	
		TNAGRIT4	43.000	--	1.12	48.157	1.4	0.272	1.74	45′	EL	21.982	0.617	1.8	45′	EL	35.172	0.80	0.272	1.12	45′	EL	21.982	
		TNAGT5A	45.000	--	1.042	46.893	1.4	0.272	1.61	45′	EL	21.982	0.617	1.88	45′	EL	35.172	0.80	0.272	1.04	45′	EL	21.982	
		TNAGT5B	45.000	--	1.017	45.785	1.4	0.272	1.58	45′	EL	21.982	0.617	1.7	45′	EL	35.172	0.80	0.272	1.02	45′	EL	21.982	

LOAD FACTORS:

DESIGN LOAD RATING FACTORS	LIMIT STATE	γ_{DC}	γ_{DW}
	STRENGTH I	1.25	1.50
	SERVICE III	1.00	1.00

NOTES:

MINIMUM RATING FACTORS ARE BASED ON THE STRENGTH I AND SERVICE III LIMIT STATES.

ALLOWABLE STRESSES FOR SERVICE III LIMIT STATE ARE AS REQUIRED FOR DESIGN.

COMMENTS:

1.

2.

3.

4.

⟨#⟩ CONTROLLING LOAD RATING

⟨1⟩ DESIGN LOAD RATING (HL-93)

⟨2⟩ DESIGN LOAD RATING (HS-20)

⟨3⟩ LEGAL LOAD RATING **

** SEE CHART FOR VEHICLE TYPE

GIRDER LOCATION

I - INTERIOR GIRDER
EL - EXTERIOR LEFT GIRDER
ER - EXTERIOR RIGHT GIRDER

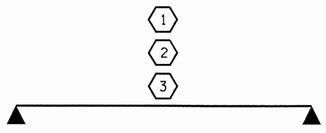

LRFR SUMMARY

FOR SPAN 'B'

PROJECT NO. BD-51030

PENDER COUNTY

STATION: 14+80.00 -L-



STATE OF NORTH CAROLINA
DEPARTMENT OF TRANSPORTATION
RALEIGH

STANDARD

LRFR SUMMARY FOR 45′ CORED SLAB UNIT 75° SKEW & 105° SKEW

(NON-INTERSTATE TRAFFIC)

REVISIONS						SHEET NO.
NO.	BY:	DATE:	NO.	BY:	DATE:	S-4
1			3			TOTAL SHEETS
2			4			21

ASSEMBLED BY : E.K. POPE	DATE : 2/17/12	
CHECKED BY : E. E. MURRAY	DATE : 3/5/12	
DRAWN BY : CVC 6/10		
CHECKED BY : DNS 6/10		

06-MAR-2012 15:08
S:\DPGI\Emily\BDProjects\BD-51030\BD51030_SD_CS.dgn
emurray

STD. NO. 21LRFR1_75&105S_45L

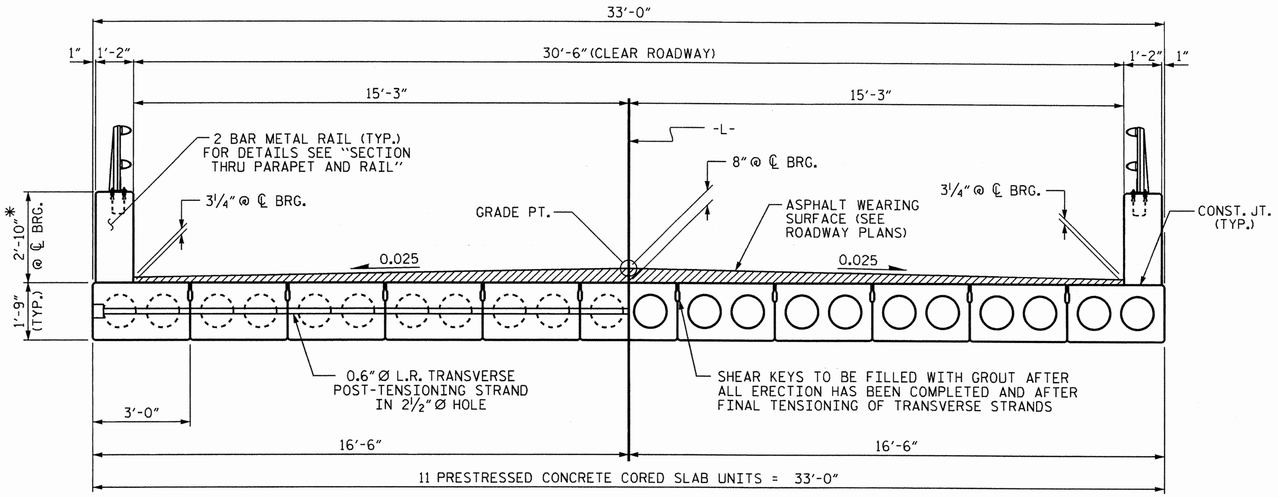

HALF SECTION
AT INTERMEDIATE DIAPHRAGMS

HALF SECTION
THROUGH VOIDS

TYPICAL SECTION

* - THE MAXIMUM PARAPET HEIGHT AND ASPHALT THICKNESS IS SHOWN. THE HEIGHT OF THE PARAPET AND ASPHALT THICKNESS VARIES WHILE THE TOP OF THE PARAPET FOLLOWS THE PROFILE OF THE GUTTERLINE. FOR PARAPET HEIGHT DETAILS AND ASPHALT THICKNESS SEE THE "TWO BAR METAL RAIL PARAPET SECTION" DETAIL.

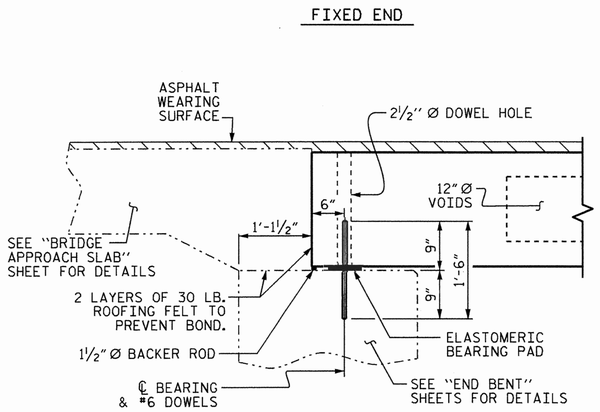

SECTION AT END BENT

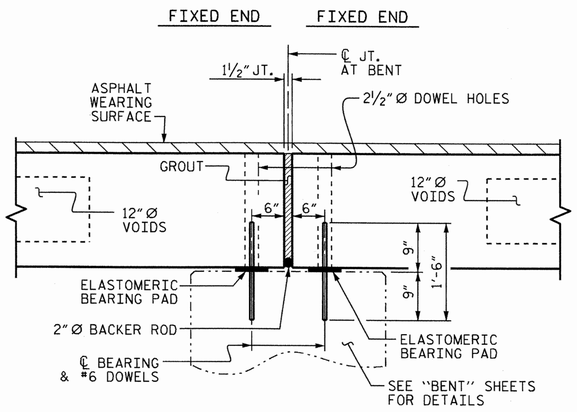

SECTION AT BENT

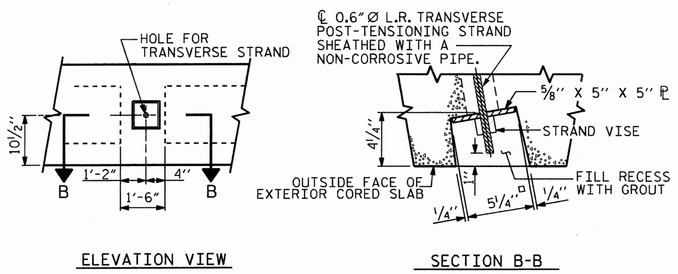

ELEVATION VIEW

SECTION B-B

GROUTED RECESS AT END OF POST-TENSIONED STRAND OF CORED SLABS

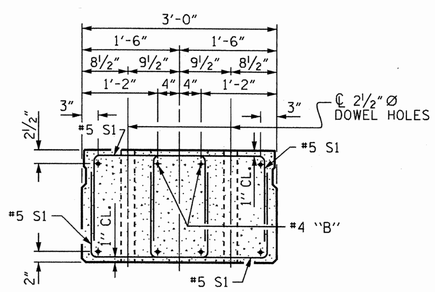

END ELEVATION

SHOWING PLACEMENT OF DOUBLE STIRRUPS AND LOCATION OF DOWEL HOLES. (STRAND LAYOUT NOT SHOWN.) INTERIOR SLAB UNIT SHOWN-EXTERIOR SLAB UNIT SIMILAR EXCEPT SHEAR KEY LOCATION.

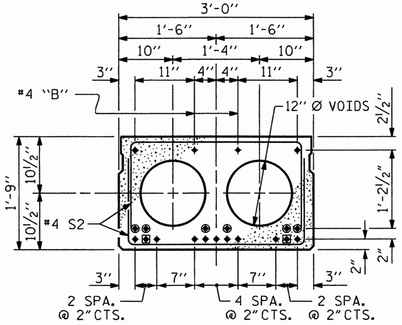

INTERIOR SLAB SECTION (45' UNIT)

(13 STRANDS REQUIRED)

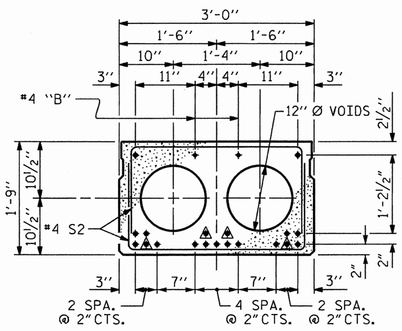

INTERIOR SLAB SECTION (55' UNIT)

(19 STRANDS REQUIRED)

0.6" Ø LOW RELAXATION STRAND LAYOUT

3"

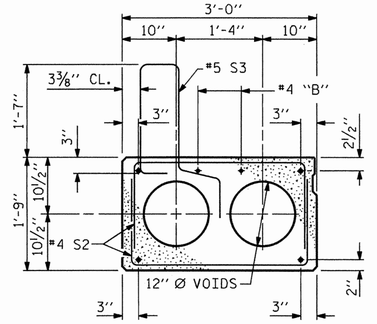

EXT. SLAB SECTION

(FOR PRESTRESSED STRAND LAYOUT, SEE INTERIOR SLAB SECTION.)

▲ BOND SHALL BE BROKEN ON THESE STRANDS FOR A DISTANCE OF 6'-0" FROM END OF CORED SLAB UNIT. SEE STANDARD SPECIFICATIONS, ARTICLE 1078-7.

◉ BOND SHALL BE BROKEN ON THESE STRANDS FOR A DISTANCE OF 2'-0" FROM END OF CORED SLAB UNIT. SEE STANDARD SPECIFICATIONS, ARTICLE 1078-7.

◉ OPTIONAL FULL LENGTH DEBONDED STRANDS. THESE STRANDS ARE NOT REQUIRED. IF THE FABRICATOR CHOOSES TO INCLUDE THESE STRANDS IN THE CORED SLAB UNIT, THE STRANDS SHALL BE DEBONDED FOR THE FULL LENGTH OF THE UNIT AT NO ADDITIONAL COST. SEE STANDARD SPECIFICATIONS, ARTICLE 1078-7.

DEBONDING LEGEND

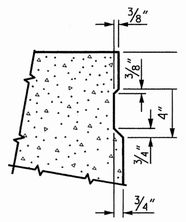

SHEAR KEY DETAIL

NOTE: OMIT SHEAR KEY ON OUTSIDE FACE OF EXTERIOR CORED SLABS.

NORTH CAROLINA PROFESSIONAL SEAL 025516 ENGINEER EMILY E. MURRAY
3/16/12

PROJECT NO. BD-51030
PENDER COUNTY
STATION: 14+80.00 -L-

SHEET 1 OF 4

STATE OF NORTH CAROLINA
DEPARTMENT OF TRANSPORTATION
RALEIGH

STANDARD
3'-0" X 1'-9"
PRESTRESSED CONCRETE
CORED SLAB UNIT
75° SKEW

REVISIONS						SHEET NO.
NO.	BY:	DATE:	NO.	BY:	DATE:	5-5
1			3			TOTAL SHEETS
2			4			21

STD. NO. 21"PCS2_33_75S

ASSEMBLED BY : E. K. POPE	DATE : 2-17-12	
CHECKED BY : E. E. MURRAY	DATE : 3-5-12	
DRAWN BY : DGE 5/09	REV. 12/11	MAA/AAC
CHECKED BY : BCH 6/09		

06-MAR-2012 15:09
S:\DPGI\Emily\BDProjects\BD-51030\BD51030_SD_CS.dgn
emurray

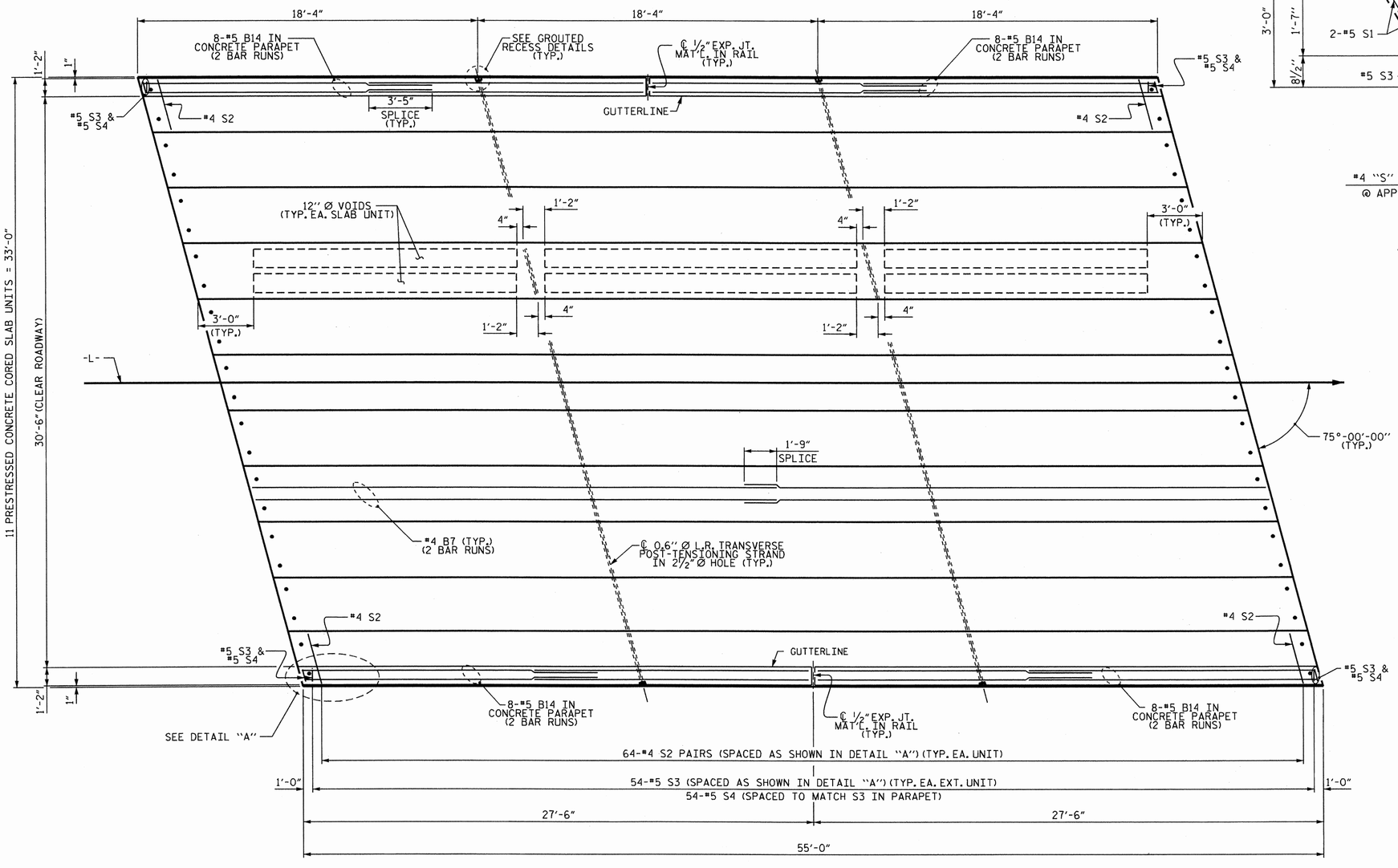

PLAN OF UNIT

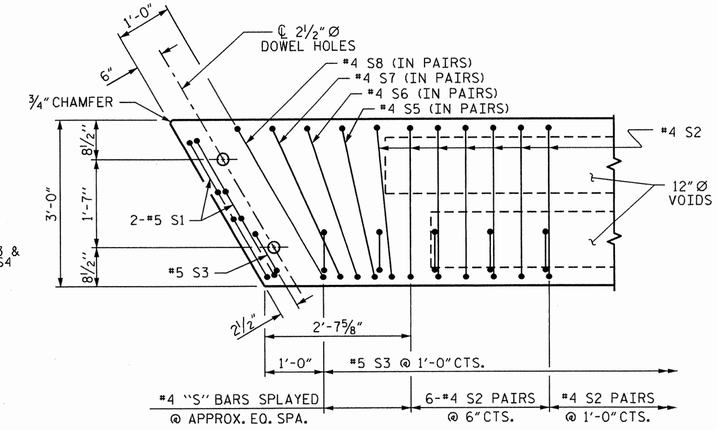

DETAIL "A"

NOTE: EXTERIOR UNIT SHOWN - INTERIOR UNIT SIMILAR EXCEPT OMIT #5 S3 BARS.

PROJECT NO. BD-51030

PENDER COUNTY

STATION: 14+80.00 -L-

SHEET 2 OF 4

STATE OF NORTH CAROLINA
DEPARTMENT OF TRANSPORTATION
RALEIGH

PLAN OF 55' UNIT
30'-6" CLEAR ROADWAY
75° SKEW

NORTH CAROLINA PROFESSIONAL SEAL 025516 ENGINEER EMILY E. MURRAY
3/6/12

REVISIONS						SHEET NO.
NO.	BY:	DATE:	NO.	BY:	DATE:	5-6
1			3			TOTAL SHEETS
2			4			21

ASSEMBLED BY :	E. K. POPE	DATE :	2-17-12
CHECKED BY :	E. E. MURRAY	DATE :	3-5-12
DRAWN BY :	DGE 5/09	REV.	12/5/11 MAA/AAC
CHECKED BY:	BCH 6/09		

06-MAR-2012 15:09
S:\DPGI\Emily\BDProjects\BD-51030\BD51030_SD_CS.dgn
emurray

STD. NO. 21"PCS_33_75S_55L

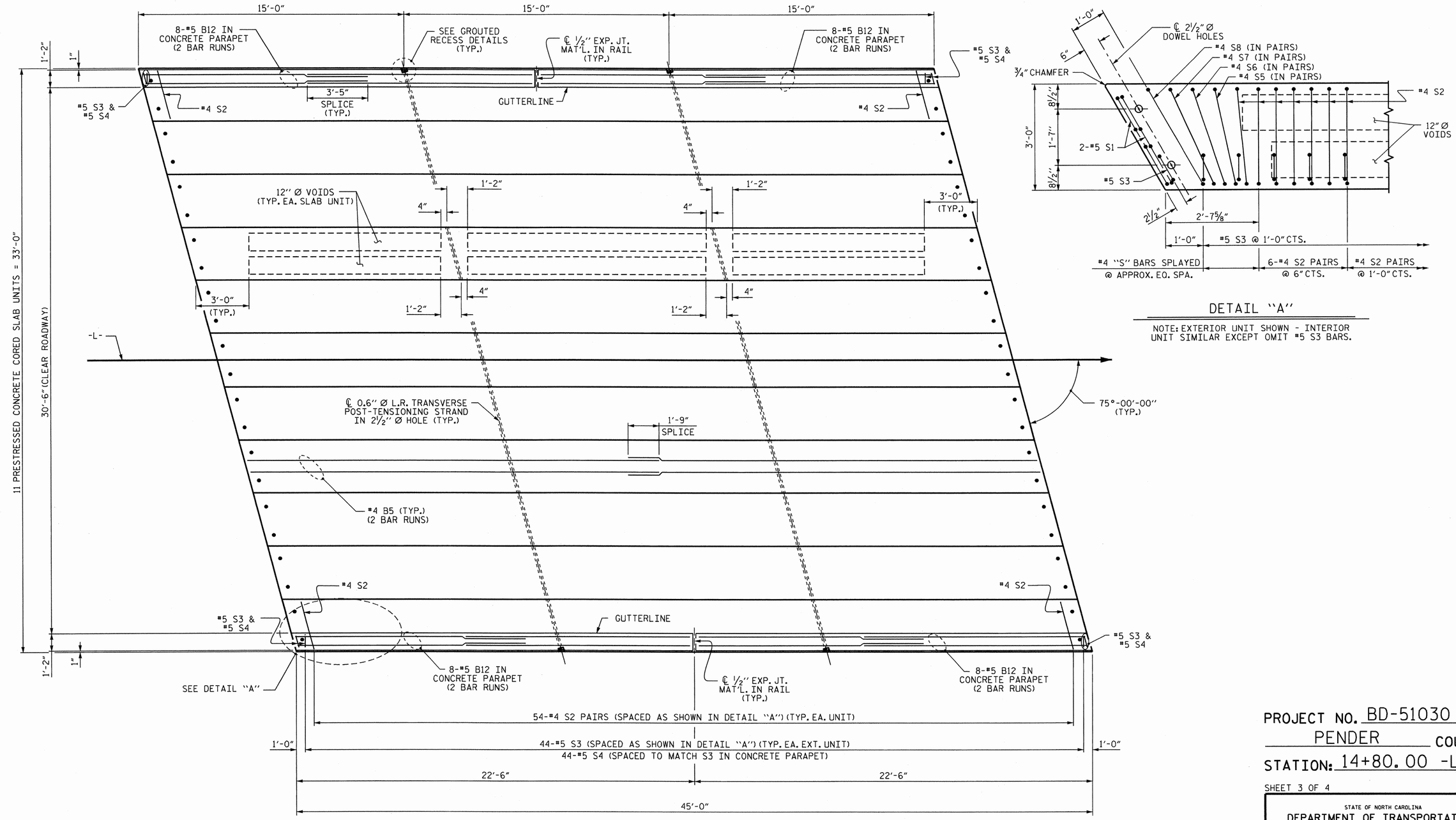

PLAN OF UNIT

DETAIL "A"

NOTE: EXTERIOR UNIT SHOWN - INTERIOR UNIT SIMILAR EXCEPT OMIT #5 S3 BARS.

PROJECT NO. BD-51030

PENDER COUNTY

STATION: 14+80.00 -L-

SHEET 3 OF 4

STATE OF NORTH CAROLINA
DEPARTMENT OF TRANSPORTATION
RALEIGH

PLAN OF 45' UNIT 30'-6" CLEAR ROADWAY 75° SKEW

REVISIONS						SHEET NO.
NO.	BY:	DATE:	NO.	BY:	DATE:	S-7
1			3			TOTAL SHEETS
2			4			21

NORTH CAROLINA PROFESSIONAL SEAL 025516 ENGINEER EMILY E. MURRAY
3/6/12

ASSEMBLED BY : E. K. POPE	DATE : 2-17-12		
CHECKED BY : E. E. MURRAY	DATE : 3-5-12		
DRAWN BY : DGE 3/09	REV. 12/5/11 MAA/AAC		
CHECKED BY : BCH 3/09			

06-MAR-2012 15:09
S:\DPG1\Emily\BDProjects\BD-51030\BD51030_SD_CS.dgn
emurray

06-MAR-2012 15:09
S:\DPG1\Emily\BDProjects\BD-51030\BD51030_SD_CS.dgn
emurray

STD. NO. 21"PCS_33_75S_45L

CONCRETE RELEASE STRENGTH	
UNIT	PSI
45' UNITS	4000
55' UNITS	4900

GRADE 270 STRANDS	0.6" Ø L.R.
AREA (SQUARE INCHES)	0.217
ULTIMATE STRENGTH (LBS. PER STRAND)	58,600
APPLIED PRESTRESS (LBS. PER STRAND)	43,950

DEAD LOAD DEFLECTION AND CAMBER	3'-0" x 1'-9"
45' CORED SLAB UNIT	0.6" Ø L.R. STRAND
CAMBER (SLAB ALONE IN PLACE)	1¼" ↑
DEFLECTION DUE TO SUPERIMPOSED DEAD LOAD**	⅛" ↓
FINAL CAMBER	1⅛" ↑

** INCLUDES FUTURE WEARING SURFACE

DEAD LOAD DEFLECTION AND CAMBER	3'-0" x 1'-9"
55' CORED SLAB UNIT	0.6" Ø L.R. STRAND
CAMBER (SLAB ALONE IN PLACE)	2½" ↑
DEFLECTION DUE TO SUPERIMPOSED DEAD LOAD**	¼" ↓
FINAL CAMBER	2¼" ↑

** INCLUDES FUTURE WEARING SURFACE

BILL OF MATERIAL PARAPETS AND END POSTS

BAR	NO.	SIZE	TYPE	LENGTH	WEIGHT
* B12	64	#5	STR	12'-11"	862
* B14	64	#5	STR	15'-5"	1029
* E1	8	#7	STR	2'-8"	44
* E2	8	#7	STR	3'-2"	52
* E3	8	#7	STR	3'-8"	60
* E4	8	#7	STR	4'-2"	68
* E5	8	#7	STR	4'-6"	74
* F1	8	#6	STR	1'-10"	22
* F2	4	#6	STR	3'-0"	18
* F3	4	#6	STR	3'-7"	22
* F4	4	#6	STR	3'-3"	20
* F5	4	#6	STR	3'-10"	23
* S4	204	#5	2	5'-9"	1294

* EPOXY COATED REINF. STEEL = 3588 LBS

CLASS AA CONCRETE	24.5 C.Y.
CONCRETE PARAPET	200.25 L.F.

CORED SLABS REQUIRED

	NUMBER	LENGTH	TOTAL LENGTH
55' UNIT			
EXTERIOR C.S.	2	55'-0"	110'-0"
INTERIOR C.S.	9	55'-0"	495'-0"
TOTAL	11		605'-0"

CORED SLABS REQUIRED

	NUMBER	LENGTH	TOTAL LENGTH
45' UNIT			
EXTERIOR C.S.	2	45'-0"	90'-0"
INTERIOR C.S.	9	45'-0"	405'-0"
TOTAL	11		495'-0"

BAR TYPES

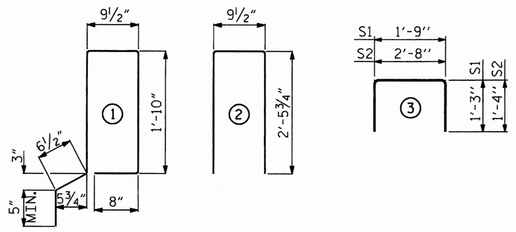

ALL BAR DIMENSIONS ARE OUT TO OUT

BILL OF MATERIAL FOR ONE 45' CORED SLAB UNIT

BAR	NUMBER	SIZE	TYPE	EXTERIOR UNIT LENGTH	EXTERIOR UNIT WEIGHT	INTERIOR UNIT LENGTH	INTERIOR UNIT WEIGHT
B5	4	#4	STR	23'-3"	62	23'-3"	62
S1	8	#5	3	4'-3"	35	4'-3"	35
S2	108	#4	3	5'-4"	385	5'-4"	385
* S3	46	#5	1	6'-1"	292		
REINFORCING STEEL			LBS.		482		482
* EPOXY COATED REINFORCING STEEL			LBS.		292		
6500 P.S.I. CONCRETE			CU. YDS.		6.6		6.6
0.6" Ø L.R. STRANDS			No.		13		13

BILL OF MATERIAL FOR ONE 55' CORED SLAB UNIT

BAR	NUMBER	SIZE	TYPE	EXTERIOR UNIT LENGTH	EXTERIOR UNIT WEIGHT	INTERIOR UNIT LENGTH	INTERIOR UNIT WEIGHT
B7	4	#4	STR	28'-3"	75	28'-3"	75
S1	8	#5	3	4'-3"	35	4'-3"	35
S2	128	#4	3	5'-4"	456	5'-4"	456
* S3	56	#5	1	6'-1"	355		
REINFORCING STEEL			LBS.		566		566
* EPOXY COATED REINFORCING STEEL			LBS.		355		
6500 P.S.I. CONCRETE			CU. YDS.		7.9		7.9
0.6" Ø L.R. STRANDS			No.		19		19

NOTES

ALL PRESTRESSING STRANDS SHALL BE 7-WIRE LOW RELAXATION GRADE 270 STRANDS AND SHALL CONFORM TO AASHTO M203 EXCEPT FOR SAMPLING REQUIREMENTS WHICH SHALL BE IN ACCORDANCE WITH THE STANDARD SPECIFICATIONS.

ALL REINFORCING STEEL CAST WITH THE CORED SLAB SECTIONS SHALL BE GRADE 60 AND SHALL BE INCLUDED IN THE UNIT PRICE BID FOR PRESTRESSED CONCRETE CORED SLABS.

RECESSES FOR TRANSVERSE STRANDS SHALL BE GROUTED AFTER THE TENSIONING OF THE STRANDS.
THE 2½" Ø DOWEL HOLES AT FIXED ENDS OF SLAB SECTIONS SHALL BE FILLED WITH NON-SHRINK GROUT.

THE BACKER RODS HALL CONFORM TO THE REQUIREMENTS OF TYPE M BOND BREAKER. SEE SECTION 1028 OF THE STANDARD SPECIFICATIONS.

WHEN CORED SLABS ARE CAST, AN INTERNAL HOLD-DOWN SYSTEM SHALL BE EMPLOYED TO PREVENT VOIDS FROM RISING OR MOVING SIDEWAYS. AT LEAST SIX WEEKS PRIOR TO CASTING CORED SLABS, THE CONTRACTOR SHALL SUBMIT TO THE ENGINEER FOR REVIEW AND COMMENT, DETAILED DRAWINGS OF THE PROPOSED HOLD-DOWN SYSTEM. IN ADDITION TO STRUCTURAL DETAILS, LOCATION AND SPACING OF THE HOLD-DOWNS SHALL BE INDICATED.

ALL REINFORCING STEEL IN THE CONCRETE PARAPETS AND END POSTS SHALL BE EPOXY COATED.

PRESTRESSING STRANDS SHALL BE CUT FLUSH WITH THE CORED SLAB UNIT ENDS.

APPLY EPOXY PROTECTIVE COATING TO CORED SLAB UNIT ENDS.

TRANSVERSE POST TENSIONING OF THE CORED SLAB UNITS SHALL BE DONE IN ACCORDANCE WITH THE STANDARD SPECIFICATIONS.

THE TRANSFER OF LOAD FROM THE ANCHORAGES TO THE CORED SLAB UNIT SHALL BE DONE WHEN THE CONCRETE HAS REACHED A COMPRESSIVE STRENGTH OF NOT LESS THAN THE REQUIRED STRENGTH SHOWN IN THE "CONCRETE RELEASE STRENGTH" TABLE.

FOR GROUT FOR STRUCTURES, SEE SPECIAL PROVISIONS.

ALL BAR SUPPORTS USED IN THE PARAPET AND ALL INCIDENTAL REINFORCING STEEL SHALL BE EPOXY COATED IN ACCORDANCE WITH THE STANDARD SPECIFICATIONS.

FOR DETAILS OF CONCRETE INSERT AND GUARDRAIL ANCHOR ASSEMBLY, SEE "RAIL POST SPACINGS AND END OF RAIL DETAILS" SHEET 3 OF 3 AND "GUARDRAIL ANCHORAGE DETAILS."

GUTTERLINE ASPHALT THICKNESS & PARAPET HEIGHT		
30'-10" CLEAR ROADWAY	ASPHALT OVERLAY THICKNESS	RAIL HEIGHT
	@ MID-SPAN	@ MID-SPAN
	NORMAL CROWN SECTION	
45' UNITS	2⅛"	2'-8⅞"
55' UNITS	1"	2'-7¾"

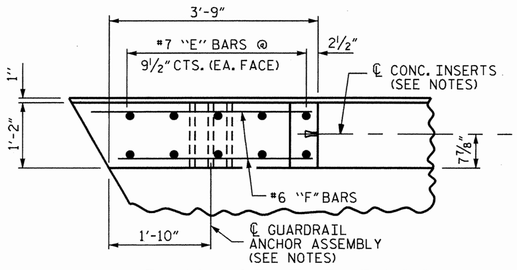

PLAN OF END POST

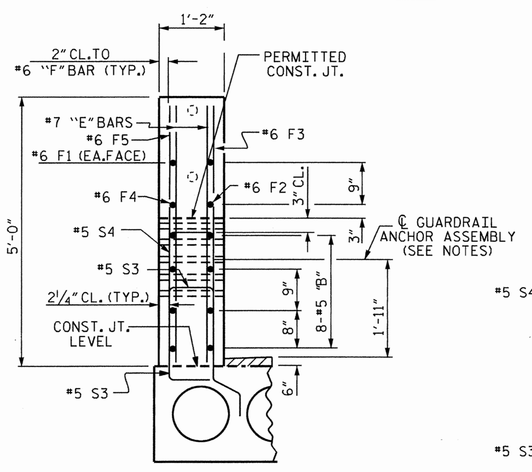

END VIEW

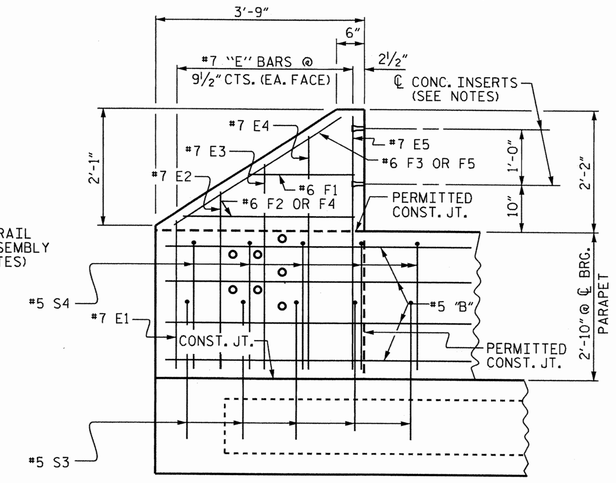

ELEVATION

PARAPET AND END POST FOR TWO-BAR RAIL

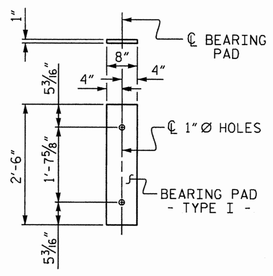

FIXED END
(TYPE I - 44 REQ'D)

ELASTOMERIC BEARING DETAILS

ELASTOMER IN ALL BEARINGS SHALL BE 50 DUROMETER HARDNESS.

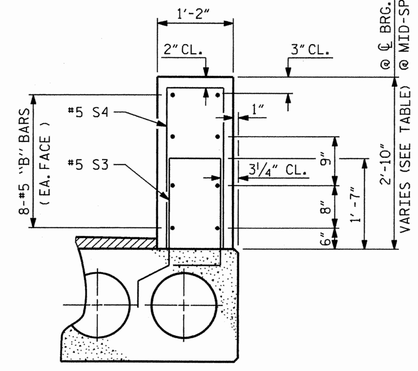

TWO BAR METAL RAIL PARAPET SECTION

NORTH CAROLINA PROFESSIONAL SEAL 025516 ENGINEER EMILY E. MURRAY
2/6/12

PROJECT NO. BD-51030
PENDER COUNTY
STATION: 14+80.00 -L-

SHEET 4 OF 4

STATE OF NORTH CAROLINA
DEPARTMENT OF TRANSPORTATION
RALEIGH

STANDARD
3'-0" X 1'-9"
PRESTRESSED CONCRETE
CORED SLAB UNIT
75° SKEW

ASSEMBLED BY : E. K. POPE	DATE : 2-17-12
CHECKED BY : E. E. MURRAY	DATE : 3-5-12
DRAWN BY : DGE 5/09	REV. 12/11 MAA/AAC
CHECKED BY : BCH 6/09	

REVISIONS						SHEET NO.
NO.	BY:	DATE:	NO.	BY:	DATE:	5-8
1			3			TOTAL SHEETS
2			4			21

06-MAR-2012 15:09
S:\DPGI\Emily\BDProjects\BD-51030\BD51030_SD_CS.dgn
emurray

STD. NO. 21"PCS3_33_75S

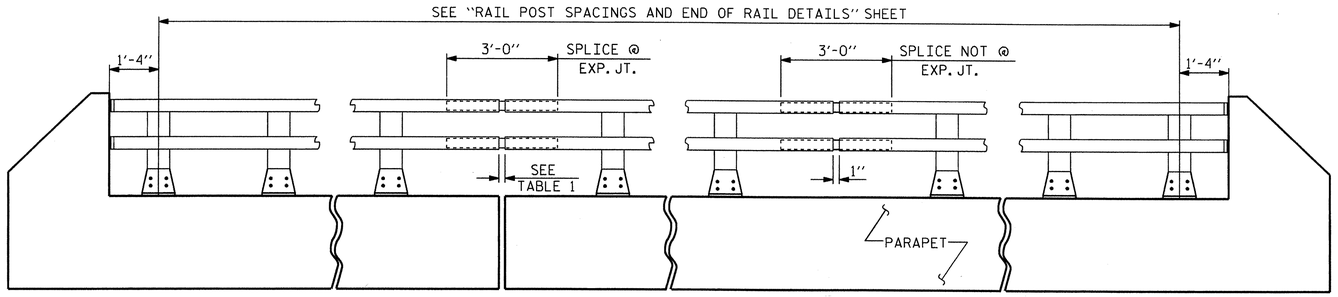

ELEVATION

NOTE : FOR ATTACHMENT OF METAL RAIL TO END POST, SEE STANDARD NO. BMR2.

TABLE 1	
℄ EXP. JT. @	RAIL OPENING
BENT No. 1	1½"

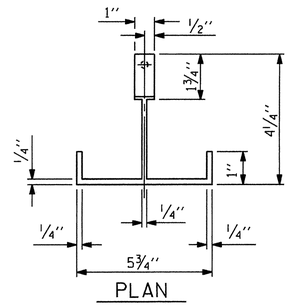

PLAN

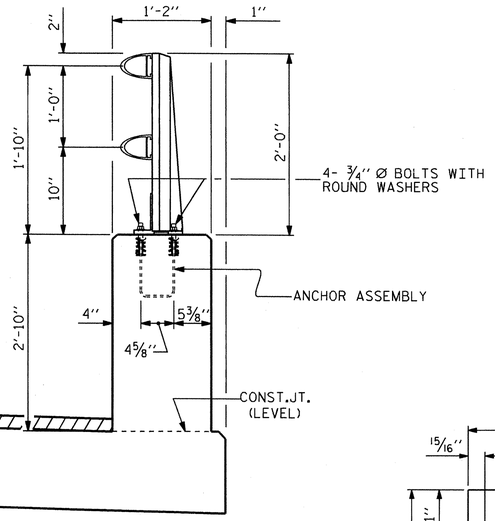

SECTION THRU PARAPET AND RAIL

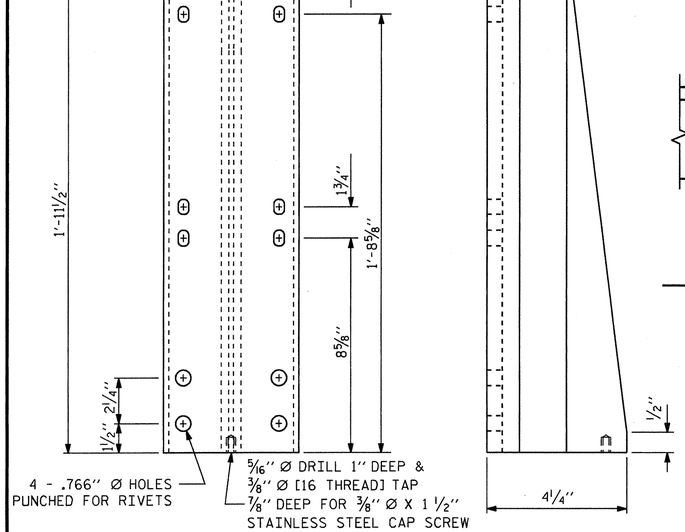

FRONT ELEVATION

SIDE ELEVATION

DETAILS OF POST

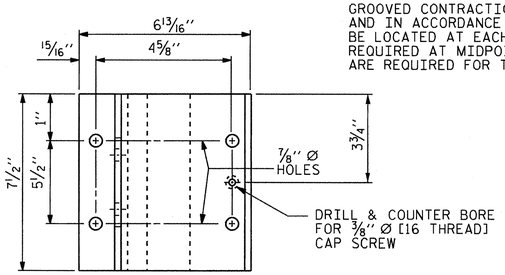

PLAN

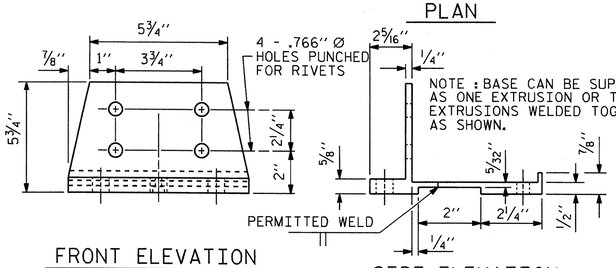

FRONT ELEVATION

SIDE ELEVATION

POST BASE DETAILS

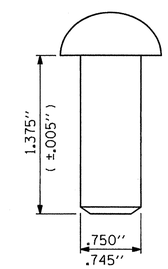

RIVET DETAIL

NOTES

AT THE CONTRACTOR'S OPTION, METAL RAIL MAY BE EITHER ALUMINUM OR GALVANIZED STEEL IN ACCORDANCE WITH THE REQUIREMENTS OF THE GENERAL NOTES AND THE FOLLOWING SPECIFICATIONS FOR THE ALTERNATE MATERIALS; HOWEVER, THE CONTRACTOR WILL BE REQUIRED TO USE THE SAME RAIL MATERIAL ON ALL STRUCTURES ON THE PROJECT FOR WHICH METAL RAIL IS DESIGNATED.

ALUMINUM RAILS

MATERIAL FOR POSTS, BASES AND RAILS, EXPANSION BARS AND CLAMP BARS SHALL BE ASTM B-221 ALLOY 6061-T6.

MATERIAL FOR RIVETS SHALL BE ASTM B316 ALLOY 6061-T6. RIVETS SHALL BE STANDARD BUTTON HEAD AND CONE POINT COLD DRIVEN AS PER DRAWING.

THE BASE OF RAIL POSTS, OR ANY OTHER ALUMINUM SURFACE IN CONTACT WITH CONCRETE SHALL BE THOROUGHLY COATED WITH AN ALUMINUM IMPREGNATED CAULKING COMPOUND OF APPROVED QUALITY.

MATERIAL FOR SHIMS TO BE ASTM B209 ALLOY 6061-T6.

GALVANIZED STEEL RAILS

MATERIAL AND GALVANIZING ARE TO CONFORM TO THE FOLLOWING SPECIFICATIONS:

POST, POST BASES, RAILS, EXPANSION BARS AND CLAMP BARS: AASHTO M270 GRADE 36 STRUCTURAL STEEL - GALVANIZED TO AASHTO M111.

RIVETS: RIVETS SHALL MEET THE REQUIREMENTS OF ASTM A502 FOR GRADE 1 RIVETS.

THE CUT ENDS OF GALVANIZED STEEL RAILING, AFTER GRINDING SMOOTH SHALL BE GIVEN TWO COATS OF ZINC RICH PAINT MEETING THE REQUIREMENTS OF FEDERAL SPECIFICATION MIL-P-26915 USAF TYPE 1, OR OF FEDERAL SPECIFICATIONS TT-P-641.

SHIMS: SHIMS SHALL MEET THE REQUIREMENTS OF ASTM A570 FOR GRADE 33 OR A611 FOR GRADE C AND SHALL BE GALVANIZED IN ACCORDANCE WITH AASHTO M111.

RAIL CAPS: RAIL CAPS SHALL MEET THE REQUIREMENTS OF ASTM A570 FOR GRADE 33 OR A611 FOR GRADE C AND SHALL BE GALVANIZED IN ACCORDANCE WITH AASHTO M111.

GENERAL NOTES

RAILING SHALL BE CONTINUOUS FROM END POST TO END POST OF BRIDGE. EACH JOINT IN RAIL LENGTH SHALL BE SPLICED AS DETAILED. PANEL LENGTHS OF RAIL SHALL BE ATTACHED TO A MINIMUM OF THREE POSTS.

FOR END OF RAIL TO CLEAR FACE OF CONCRETE END POST DIMENSION, SEE STANDARD NO. BMR2.

CAP SCREWS SHALL BE ASTM F593 ALLOY 305 STAINLESS STEEL. WASHERS SHALL MEET THE REQUIREMENTS OF ASTM F844 EXCEPT THEY SHALL BE MADE FROM ALLOY 304 STAINLESS STEEL.

CERTIFIED MILL REPORTS ARE REQUIRED FOR RAILS AND POSTS. SHOP INSPECTION IS NOT REQUIRED.

METAL RAIL POSTS SHALL BE SET NORMAL TO CURB GRADE.

METHOD OF MEASUREMENT FOR METAL RAILS: FOR LENGTH OF METAL RAILS TO BE PAID FOR, SEE THE STANDARD SPECIFICATIONS.

CURVED RAIL USAGE: WHERE RAILS ARE TO BE USED ON BRIDGES ON HORIZONTAL AND/OR VERTICAL CURVATURE THE CONTRACTOR MAY, AT HIS OPTION, HAVE THE REQUIRED CURVATURE IN THE RAIL FORMED IN THE SHOP OR IN THE FIELD. IN EITHER EVENT, THE RAIL SHALL CONFORM WITHOUT BUCKLING OR KINKING TO THE REQUIRED CURVATURE IN A UNIFORM MANNER ACCEPTABLE TO THE ENGINEER.

TO INSURE FUTURE IDENTIFICATION OF THE FABRICATOR, A PERMANENT IDENTIFYING MARK SHALL BE PLACED ON EACH POST. THE METHOD OF MARKING AND LOCATION SHALL BE SUCH THAT IT DOES NOT DETRACT FROM THE APPEARANCE OF THE POST, BUT REMAINS VISIBLE AFTER RAIL PLACEMENT.

SHIMS SHALL BE USED AS NECESSARY FOR POST ALIGNMENT.

ALLOY 6351-T5 MAY BE SUBSTITUTED FOR ALLOY 6061-T6 WHERE APPLICABLE.

MINOR VARIATIONS IN DETAILS OF METAL RAIL WILL BE CONSIDERED. DETAILS OF SUCH VARIATIONS, IF DESIRED, SHALL BE SUBMITTED FOR APPROVAL.

GROOVED CONTRACTION JOINTS, ½" IN DEPTH, SHALL BE TOOLED IN ALL EXPOSED FACES OF THE PARAPET AND IN ACCORDANCE WITH ARTICLE 825-10(B) OF THE STANDARD SPECIFICATIONS. A CONTRACTION JOINT SHALL BE LOCATED AT EACH THIRD POINT BETWEEN PARAPET EXPANSION JOINTS. ONLY ONE CONTRACTION JOINT IS REQUIRED AT MIDPOINT OF PARAPET SEGMENTS LESS THAN 20 FEET IN LENGTH AND NO CONTRACTION JOINTS ARE REQUIRED FOR THOSE SEGMENTS LESS THAN 10 FEET IN LENGTH.

PAY LENGTH = 185.25 LIN. FT.

PROJECT NO. BD-51030

PENDER COUNTY

STATION: 14+80.00 -L-

SHEET 1 OF 3

STATE OF NORTH CAROLINA
DEPARTMENT OF TRANSPORTATION
RALEIGH

STANDARD

2 BAR METAL RAIL

REVISIONS						SHEET NO.
NO.	BY:	DATE:	NO.	BY:	DATE:	S-9
1			3			TOTAL SHEETS
2			4			21

STD. NO. BMR3

ASSEMBLED BY :	E. K. POPE	DATE :	2-21-12
CHECKED BY :	E. E. MURRAY	DATE :	3-5-12
DRAWN BY : EEM 6/94	REV. 5/7/03R		RWW/JTE
CHECKED BY : RGW 6/94	REV. 5/1/06		TLA/GM
	REV. 10/1/11		MAA/GM

NORTH CAROLINA PROFESSIONAL SEAL 025516 ENGINEER EMILY E. MURRAY

3/6/12

06-MAR-2012 15:10
S:\DPG1\Emily\BDProjects\BD-51030\BD51030_SD_CS.dgn
emurray

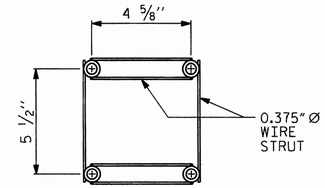

PLAN

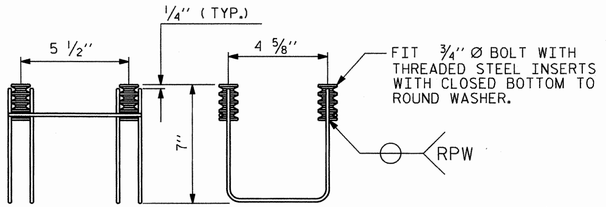

SIDE VIEW ELEVATION

4-BOLT METAL RAIL ANCHOR ASSEMBLY

(ASSEMBLIES REQUIRED)

NOTES

STRUCTURAL CONCRETE ANCHOR ASSEMBLY

THE STRUCTURAL CONCRETE ANCHOR ASSEMBLY SHALL CONSIST OF THE FOLLOWING COMPONENTS :

A. FERRULES SHALL BE MADE FROM STEEL MEETING THE REQUIREMENTS OF AASHTO M169, GRADE 12L14 AND SHALL HAVE A MINIMUM LENGTH OF THREADS OF 2" FOR 3/4" FERRULES.

B. 4 - 3/4" Ø X 2 1/2" BOLTS WITH WASHERS. BOLTS SHALL CONFORM TO THE REQUIREMENTS OF ASTM A307. BOLTS AND WASHERS SHALL BE GALVANIZED. AT THE CONTRACTOR'S OPTION, STAINLESS STEEL BOLTS AND WASHERS MAY BE USED AS AN ALTERNATE FOR THE 3/4" Ø X 2 1/2" GALVANIZED BOLTS AND WASHERS. THEY SHALL CONFORM TO OR EXCEED THE MECHANICAL REQUIREMENTS OF ASTM A307. THE USE OF THIS ALTERNATE SHALL BE APPROVED BY THE ENGINEER.

C. WIRE STRUT SHOWN IN THE CONCRETE ANCHOR ASSEMBLY DETAIL IS THE MINIMUM ALLOWABLE SIZE AND SHALL HAVE A MINIMUM TENSILE STRENGTH OF 100,000 PSI. AS AN OPTION, A 7/16" Ø WIRE STRUT WITH A MINIMUM TENSILE STRENGTH OF 90,000 PSI IS ACCEPTABLE.

D. THE METAL RAIL ANCHOR ASSEMBLIES TO BE HOT DIPPED GALVANIZED TO CONFORM TO REQUIREMENTS OF AASHTO M111.

E. THE COST OF THE METAL RAIL ANCHOR ASSEMBLY WITH BOLTS AND WASHERS COMPLETE IN PLACE SHALL BE INCLUDED IN THE PRICE BID FOR LINEAR FEET OF METAL RAIL.

F. BOLTS TO BE TIGHTENED ONE-HALF TURN WITH A WRENCH FROM A FINGER-TIGHT POSITION.

THE CONTRACTOR MAY USE ADHESIVELY ANCHORED ANCHOR BOLTS IN PLACE OF THE METAL RAIL ANCHOR ASSEMBLY. LEVEL ONE FIELD TESTING IS REQUIRED, AND THE YIELD LOAD OF THE 3/4" Ø BOLT IS 10 KIPS. FOR ADHESIVELY ANCHORED ANCHOR BOLTS OR DOWELS, SEE THE STANDARD SPECIFICATIONS.

WHEN ADHESIVELY ANCHORED ANCHOR BOLTS ARE USED, BOLTS SHALL MEET THE REQUIREMENTS OF ASTM F593 ALLOY 304 STAINLESS STEEL WITH MINIMUM 75,000 PSI ULTIMATE STRENGTH. NUTS SHALL MEET THE REQUIREMENTS OF ASTM F594 ALLOY 304 STAINLESS STEEL AND WASHERS SHALL MEET THE REQUIREMENTS OF ASTM F844 EXCEPT THEY SHALL BE MADE FROM ALLOY 304 STAINLESS STEEL.

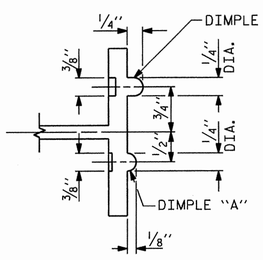

SECTION B - B

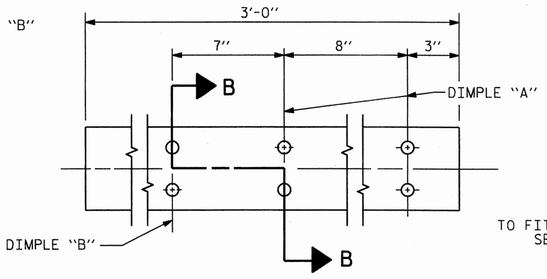

EXPANSION BAR DETAILS

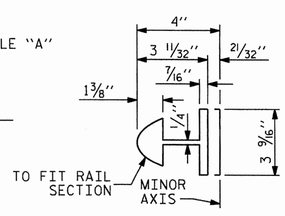

BAR SECTION

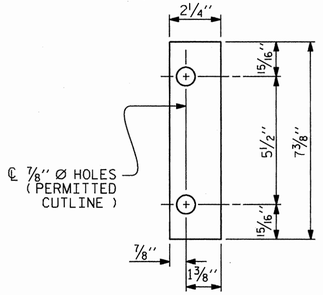

FRONT PLATE

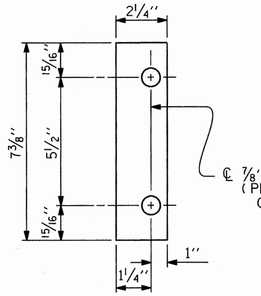

REAR PLATE

SHIM DETAILS

NOTE :
SHIMS MAY BE CUT ALONG PERMITTED CUTLINE OR SLOTTED TO EDGE OF PLATE TO FACILITATE PLACEMENT.

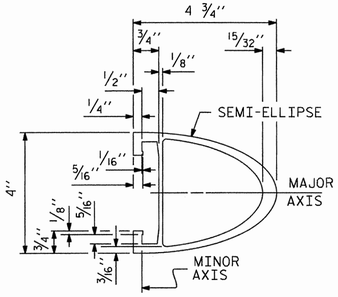

RAIL SECTION

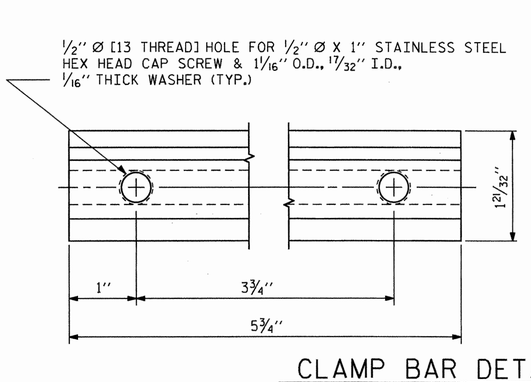

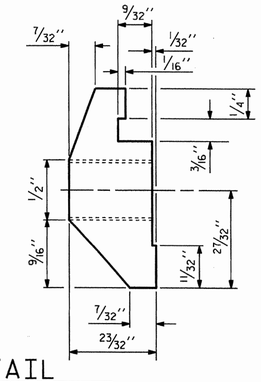

CLAMP BAR DETAIL

(4 REQUIRED PER POST)

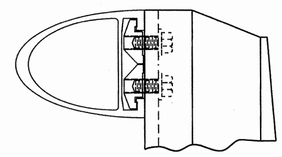

CLAMP ASSEMBLY

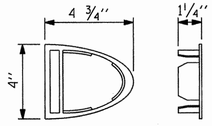

RAIL CAP

PROJECT NO. BD-51030

PENDER COUNTY

STATION: 14+80.00 -L-

SHEET 2 OF 3

STATE OF NORTH CAROLINA
DEPARTMENT OF TRANSPORTATION
RALEIGH

STANDARD

2 BAR METAL RAIL

REVISIONS						SHEET NO.
NO.	BY:	DATE:	NO.	BY:	DATE:	5-10
1			3			TOTAL SHEETS
2			4			21

ASSEMBLED BY : E. K. POPE	DATE : 2-21-12	REV. 8/16/99	MAB/LES
CHECKED BY : E. E. MURRAY	DATE : 3-5-12	REV. 5/1/06R	KMM/GM
DRAWN BY : EEM 6/94		REV. 10/1/11	MAA/GM
CHECKED BY : RGW 6/94			

NORTH CAROLINA PROFESSIONAL SEAL 025516 ENGINEER EMILY E. MURRAY
3/6/12

06-MAR-2012 15:10
S:\DPGI\Emily\BDProjects\BD-51030\BD51030_SD_CS.dgn
emurray

STD. NO. BMR4

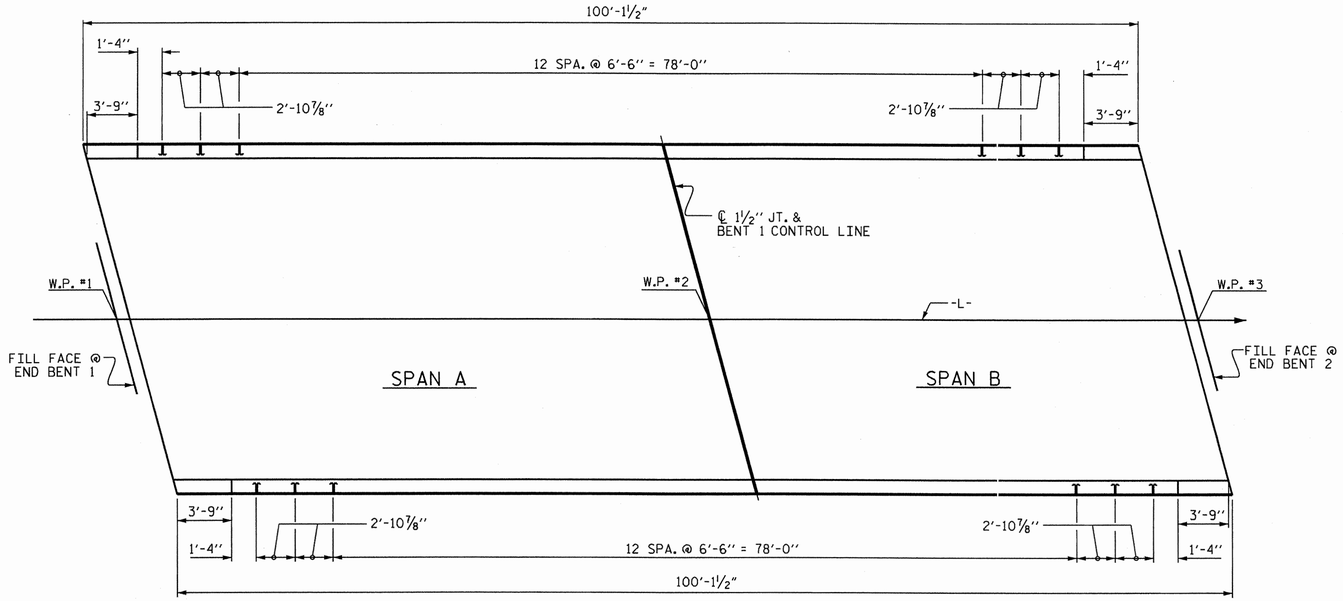

PLAN OF RAIL POST SPACINGS

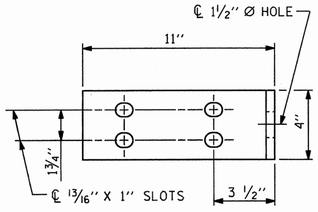

ELEVATION

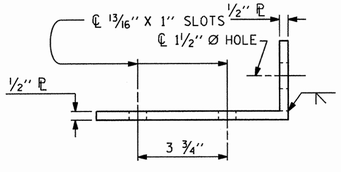

TOP VIEW

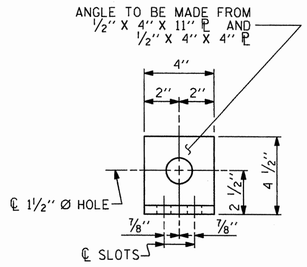

END VIEW (FIX AND EXP.)

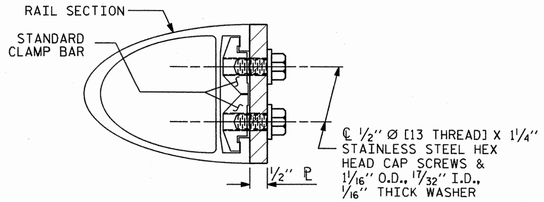

SECTION H-H (FIX)

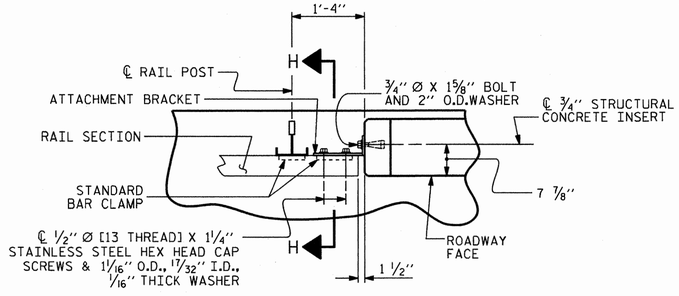

PLAN - RAIL AND END POST

NOTES

STRUCTURAL CONCRETE INSERT

THE STRUCTURAL CONCRETE INSERT ASSEMBLY SHALL CONSIST OF THE FOLLOWING COMPONENTS:

A. FERRULES SHALL BE MADE FROM STEEL MEETING THE REQUIREMENTS OF AASHTO M169, GRADE 12L14 AND SHALL HAVE A MINIMUM LENGTH OF THREADS OF 1½".

B. 1 - ¾" Ø X 1⅝" BOLT WITH WASHER. BOLT SHALL CONFORM TO THE REQUIREMENTS OF ASTM A307. BOLT AND WASHER SHALL BE GALVANIZED. (AT THE CONTRACTOR'S OPTION, STAINLESS STEEL BOLT AND WASHER MAY BE USED AS AN ALTERNATE FOR THE ¾" Ø X 1⅝" GALVANIZED BOLT AND WASHER. THEY SHALL CONFORM TO OR EXCEED THE MECHANICAL REQUIREMENTS OF ASTM A307. THE USE OF THIS ALTERNATE SHALL BE APPROVED BY THE ENGINEER.)

C. WIRE STRUT SHOWN IN THE CONCRETE INSERT ASSEMBLY DETAIL IS THE MINIMUM ALLOWABLE SIZE AND SHALL HAVE A MINIMUM TENSILE STRENGTH OF 100,000 PSI. AS AN OPTION, A 7/16" Ø WIRE STRUT WITH A MINIMUM TENSILE STRENGTH OF 90,000 PSI IS ACCEPTABLE.

NOTES

METAL RAIL TO END POST CONNECTION

THE METAL RAIL TO END POST CONNECTION SHALL CONSIST OF THE FOLLOWING COMPONENTS:

A. ½" PLATES SHALL CONFORM TO AASHTO M270 GRADE 36 AND SHALL BE GALVANIZED AFTER FABRICATION.

B. ¾" STRUCTURAL CONCRETE INSERT SHALL HAVE A WORKING LOAD SHEAR CAPACITY OF 4800 LBS. THE FERRULES SHALL ENGAGE A ¾"Ø X 1⅝" BOLT WITH 2" O.D. WASHER IN PLACE. THE ¾"Ø X 1⅝" BOLT SHALL HAVE N. C. THREADS.

C. CAP SCREWS FOR RAIL ATTACHMENT TO ANGLE SHALL CONFORM TO THE REQUIREMENTS OF ASTM F593 ALLOY 305 STAINLESS STEEL. CAP SCREWS TO BE CENTERED IN SLOTS AT 60°F.

D. STANDARD CLAMP BARS (SEE METAL RAIL SHEET).

E. ½" Ø PIPE SLEEVES (IF REQUIRED) TO BE GALVANIZED.

THE COST OF THE STANDARD CLAMP BARS AND CAP SCREWS USED IN THE METAL RAIL TO END POST CONNECTION SHALL BE INCLUDED IN THE UNIT CONTRACT PRICE BID FOR LINEAR FEET OF 1 OR 2 BAR METAL RAILS.

THE ¾" STRUCTURAL CONCRETE INSERT WITH BOLT SHALL BE ASSEMBLED IN THE SHOP.

THE COST OF THE ¾" STRUCTURAL CONCRETE INSERT ASSEMBLY, AND THE ½" PLATES COMPLETE IN PLACE SHALL BE INCLUDED IN THE VARIOUS PAY ITEMS.

THE CONTRACTOR, AT HIS OPTION, MAY USE AN ADHESIVE BONDING SYSTEM IN LIEU OF THE STRUCTURAL CONCRETE INSERT EMBEDDED IN THE END POST. IF THE ADHESIVE BONDING SYSTEM IS USED, THE ¾" Ø X 1⅝" BOLT WITH WASHER SHALL BE REPLACED WITH A ¾"Ø X 6½" BOLT AND 2" O.D. WASHER. ALL SPECIFICATIONS THAT APPLY TO THE ¾" Ø X 1⅝" BOLT SHALL APPLY TO THE ¾"Ø X 6 ½" BOLT. FIELD TESTING OF THE ADHESIVE BONDING SYSTEM IS NOT REQUIRED.

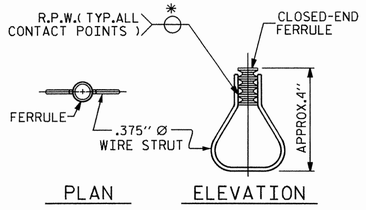

STRUCTURAL CONCRETE INSERT

*EACH WELDED ATTACHMENT OF WIRE TO FERRULE SHALL DEVELOP THE TENSILE STRENGTH OF THE WIRE.

FIXED

DETAILS FOR ATTACHING METAL RAIL TO END POST

PROJECT NO. BD-51030

PENDER COUNTY

STATION: 14+80.00 -L-

SHEET 3 OF 3

STATE OF NORTH CAROLINA
DEPARTMENT OF TRANSPORTATION
RALEIGH
STANDARD

RAIL POST SPACINGS AND END OF RAIL DETAILS
FOR ONE OR TWO BAR METAL RAILS

REVISIONS						SHEET NO.
NO.	BY:	DATE:	NO.	BY:	DATE:	3-11
1			3			TOTAL SHEETS
2			4			21

NORTH CAROLINA PROFESSIONAL SEAL 025516 ENGINEER EMILY E. MURRAY
3/16/12

ASSEMBLED BY : E. K. POPE		DATE : 2-21-12	
CHECKED BY : E. E. MURRAY		DATE : 3-5-12	
DRAWN BY : FCJ 1/88	REV. 5/7/03	RWW/JTE	
CHECKED BY : CRK 3/89	REV. 5/1/06	TLA/GM	
	REV. 10/1/11	MAA/GM	

06-MAR-2012 15:10
S:\DPGI\Emily\BDProjects\BD-51030\BD51030_SD_CS.dgn
emurray

STD. NO. BMR2

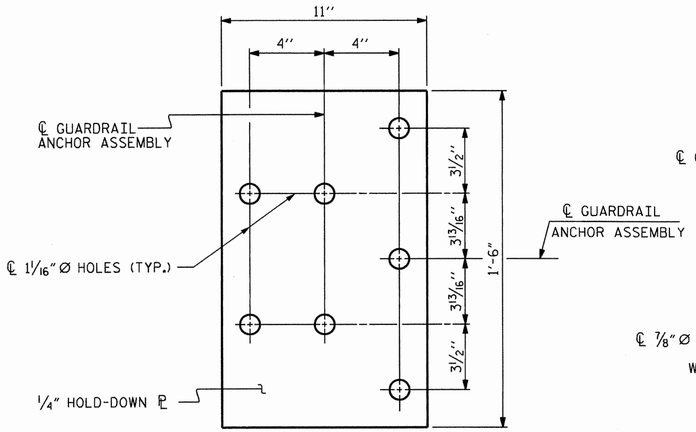

PLAN

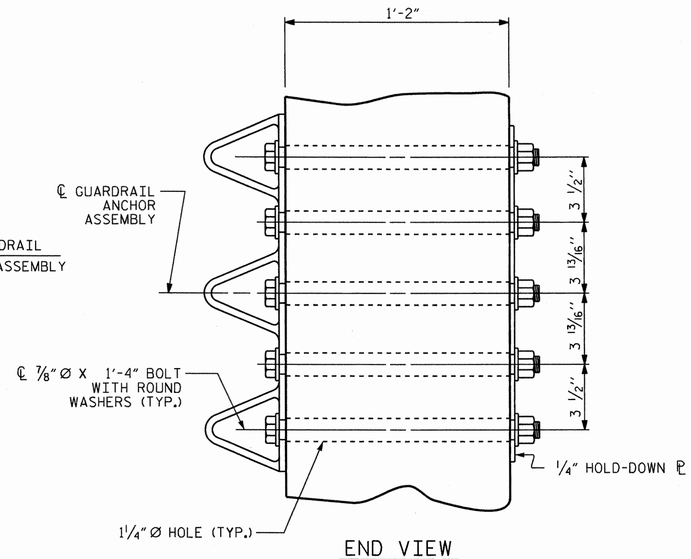

END VIEW

GUARDRAIL ANCHOR ASSEMBLY DETAILS

NOTES

THE GUARDRAIL ANCHOR ASSEMBLY SHALL CONSIST OF A 1/4'' HOLD DOWN PLATE AND 7 - 7/8'' Ø BOLTS WITH NUTS AND WASHERS.

THE HOLD-DOWN PLATE SHALL CONFORM TO AASHTO M270 GRADE 36. AFTER FABRICATION, THE HOLD-DOWN PLATE SHALL BE HOT-DIP GALVANIZED IN ACCORDANCE WITH AASHTO M111.

BOLTS SHALL CONFORM TO THE REQUIREMENTS OF ASTM A307 AND NUTS SHALL CONFORM TO THE REQUIREMENTS OF AASHTO M291. BOLTS, NUTS AND WASHERS SHALL BE GALVANIZED. AT THE CONTRACTOR'S OPTION, STAINLESS STEEL BOLTS, NUTS AND WASHERS MAY BE USED AS AN ALTERNATE FOR THE 7/8'' Ø GALVANIZED BOLTS, NUTS AND WASHERS. THEY SHALL CONFORM TO OR EXCEED THE MECHANICAL REQUIREMENTS OF ASTM A307. THE USE OF THIS ALTERNATE SHALL BE APPROVED BY THE ENGINEER.

THE GUARDRAIL ANCHOR ASSEMBLY IS REQUIRED AT ALL POINTS WHERE APPROACH GUARDRAIL IS TO BE ATTACHED TO THE END OF THE PARAPET. FOR POINTS OF ATTACHMENT, SEE SKETCH.

AFTER INSTALLATION, THE EXPOSED THREAD OF THE BOLT SHALL BE BURRED WITH A SHARP POINTED TOOL.

THE COST OF THE GUARDRAIL ANCHOR ASSEMBLIES WITH BOLTS, NUTS AND WASHERS COMPLETE IN PLACE, SHALL BE INCLUDED IN THE VARIOUS PAY ITEMS.

THE VERTICAL REINFORCING BARS MAY BE SHIFTED SLIGHTLY IN THE END POST TO CLEAR ASSEMBLY BOLTS.

THE 1 1/4'' Ø HOLES SHALL BE FORMED OR DRILLED WITH A CORE BIT. IMPACT TOOLS WILL NOT BE PERMITTED. ANY CONCRETE DAMAGED BY THIS WORK SHALL BE REPAIRED TO THE SATISFACTION OF THE ENGINEER.

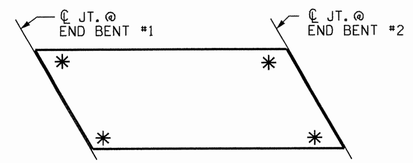

SKETCH SHOWING POINTS OF ATTACHMENT

* LOCATION OF GUARDRAIL ATTACHMENT

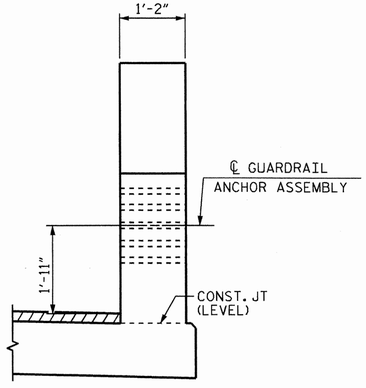

END VIEW
(TWO BAR METAL RAIL)

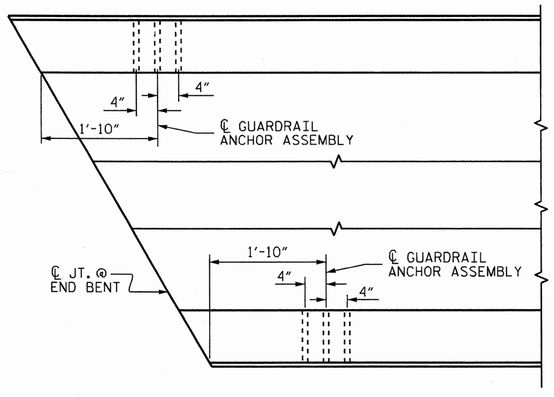

PLAN

LOCATION OF GUARDRAIL ANCHOR AT END POST

PROJECT NO. BD-51030
PENDER COUNTY
STATION: 14+80.00 -L-

STATE OF NORTH CAROLINA
DEPARTMENT OF TRANSPORTATION
RALEIGH
STANDARD
GUARDRAIL ANCHORAGE DETAILS FOR METAL RAILS

REVISIONS						SHEET NO.
NO.	BY:	DATE:	NO.	BY:	DATE:	S-12
1			3			TOTAL SHEETS
2			4			21

ASSEMBLED BY :	E. K. POPE	DATE :	3-5-12
CHECKED BY :	E. E. MURRAY	DATE :	3-5-12
DRAWN BY :	MAA 5/10	ADDED	5/6/10
CHECKED BY :	GM 5/10	REV.	10/1/11 MAA/GM
		REV.	12/5/11 MAA/GM

06-MAR-2012 15:10
S:\DPG1\Emily\BDProjects\BD-51030\BD51030_SD_CS.dgn
emurray

(SHT 6) STD. NO. GRA3

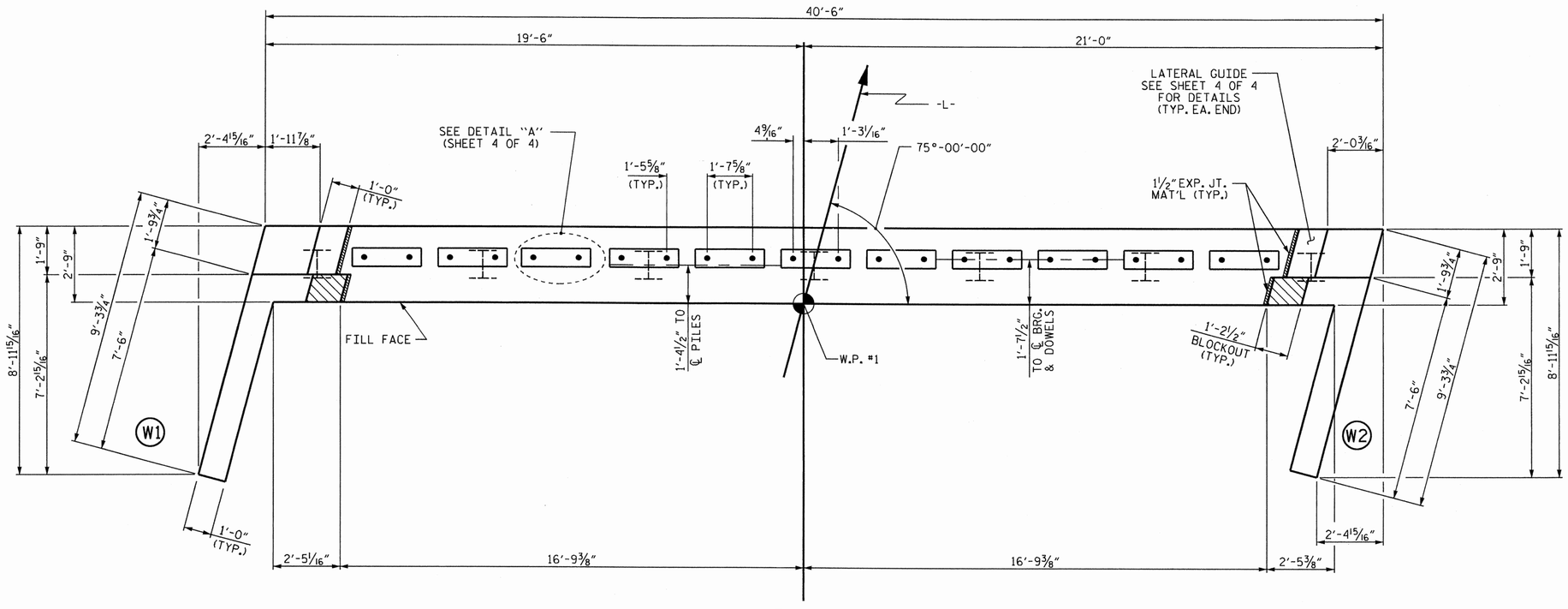

PLAN

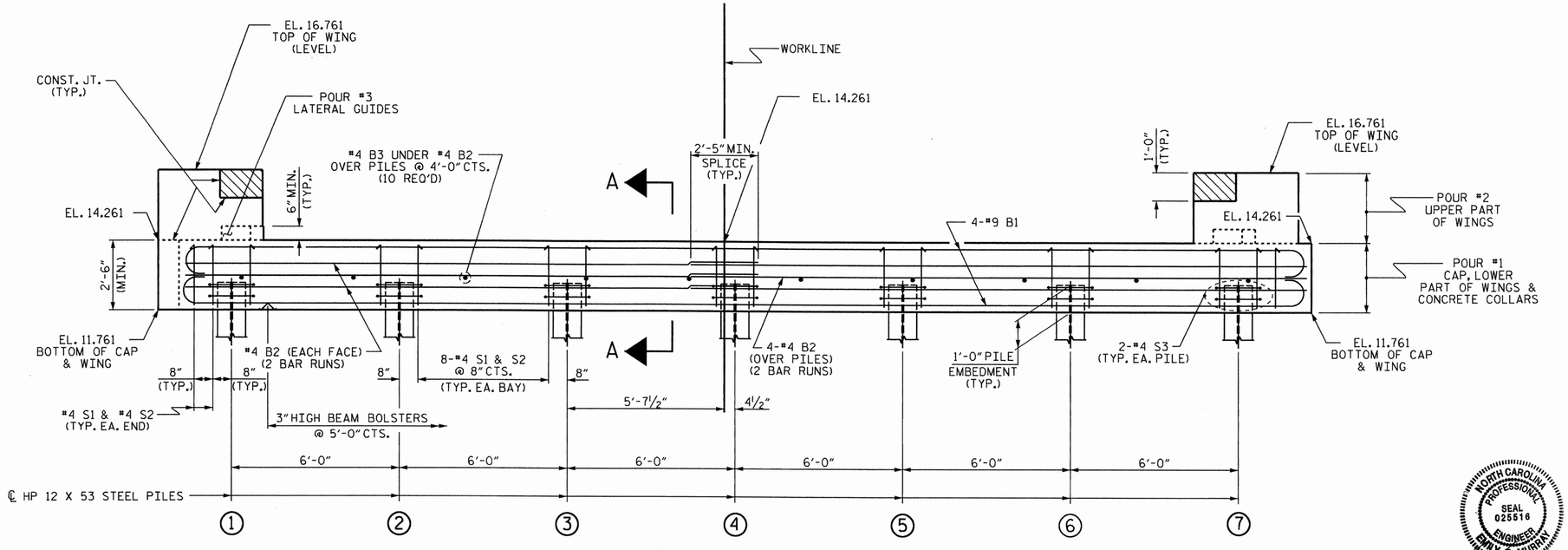

ELEVATION

WINGS NOT SHOWN FOR CLARITY.
FOR SECTION A-A, SEE SHEET 4 OF 4.
CONCRETE COLLARS FOR STEEL PILES NOT SHOWN IN PLAN AND ELEVATION VIEWS FOR CLARITY.
SEE "CORROSION PROTECTION FOR STEEL PILES DETAIL", SHEET 4 OF 4.

NOTES

STIRRUPS IN CAP MAY BE SHIFTED AS NECESSARY TO CLEAR DOWELS.

THE LATERAL GUIDES ARE NOT TO BE POURED UNTIL AFTER THE CORED SLAB UNITS ARE IN PLACE.

THE CONCRETE IN THE SHADED AREA OF THE WING SHALL BE POURED AFTER THE VERTICAL CONCRETE BARRIER RAIL IS CAST IF SLIP FORMING IS USED.

FOR PILE SPLICE DETAILS, SEE SHEET 4 OF 4.

FOR WING DETAILS, SEE SHEET 3 OF 4.

THE CONTRACTOR HAS THE OPTION TO OMIT THE LATERAL GUIDE IF APPROVED BY THE ENGINEER.

INSTALL THE 4" DIA. DRAIN PIPE THROUGH THE WING WALL AS REQUIRED FOR REINFORCED BRIDGE APPROACH FILLS, SEE THE ROADWAY PLANS. REINFORCING STEEL IN THE WING WALL MAY BE SHIFTED AS NECESSARY TO CLEAR THE DRAIN PIPE.

PROJECT NO. BD-51030

PENDER COUNTY

STATION: 14+80.00 -L-

SHEET 1 OF 4

STATE OF NORTH CAROLINA
DEPARTMENT OF TRANSPORTATION
RALEIGH

SUBSTRUCTURE

END BENT No. 1

REVISIONS						SHEET NO.
NO.	BY:	DATE:	NO.	BY:	DATE:	S-13
1			3			TOTAL SHEETS
2			4			21

NORTH CAROLINA PROFESSIONAL SEAL 025516 ENGINEER EMILY E. MURRAY
3/16/12

ASSEMBLED BY : E. K. POPE	DATE : 2-21-12
CHECKED BY : E. E. MURRAY	DATE : 3-5-12
DRAWN BY : DGE 03/10	
CHECKED BY : MKT 03/10	

06-MAR-2012 15:11
S:\DPG1\Emily\BDProjects\BD-51030\BD51030_SD_CS.dgn
emurray

STD. NO. EB_33_75S

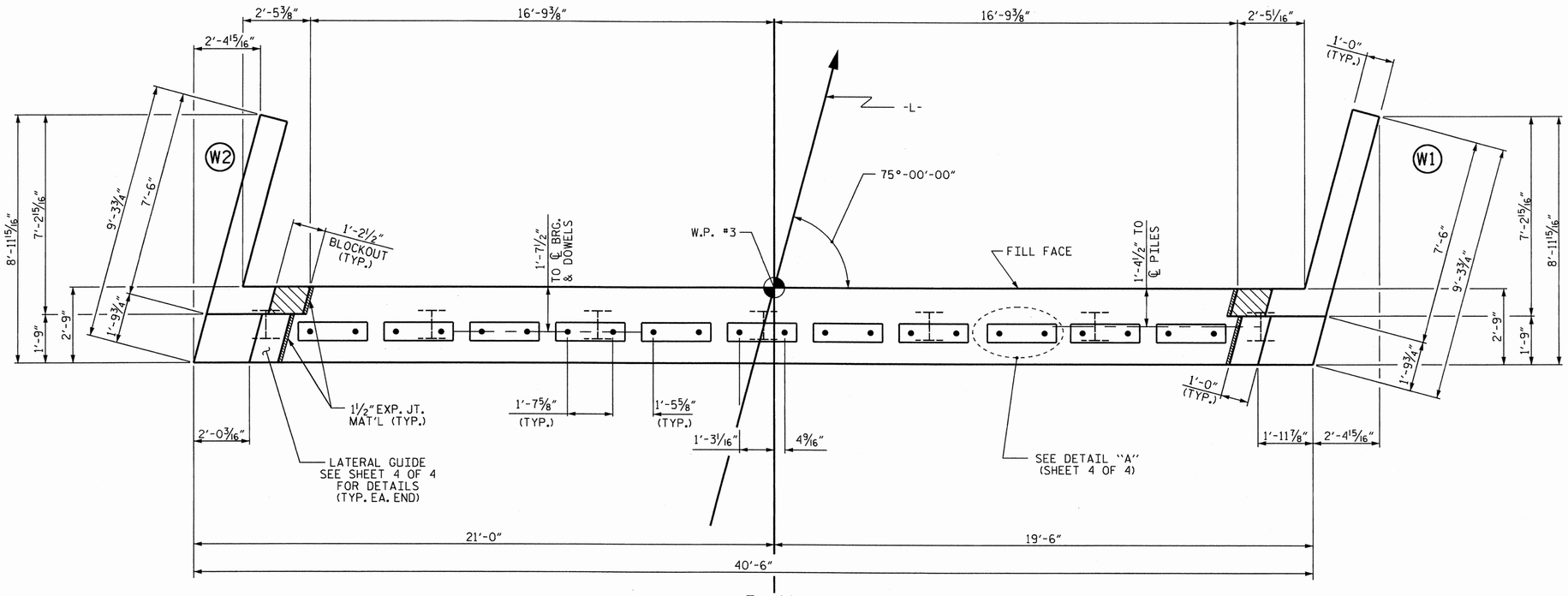

PLAN

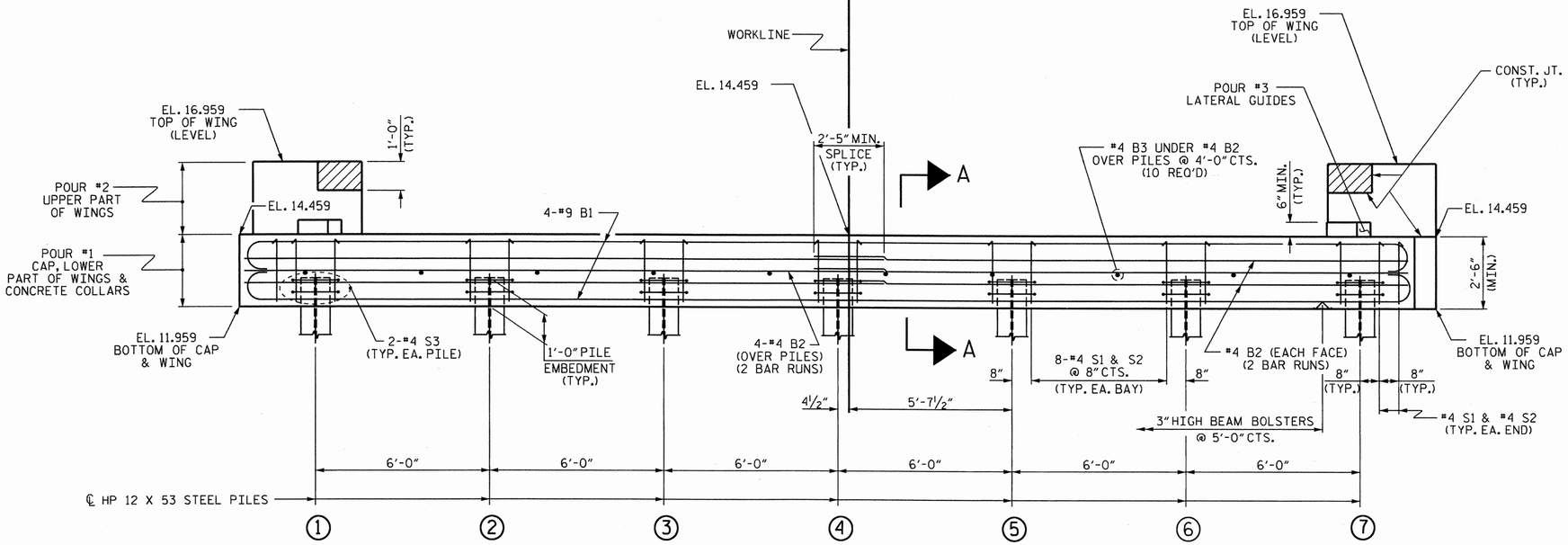

ELEVATION

WINGS NOT SHOWN FOR CLARITY.
FOR SECTION A-A, SEE SHEET 4 OF 4.
CONCRETE COLLARS FOR STEEL PILES NOT SHOWN IN PLAN AND ELEVATION VIEWS FOR CLARITY.
SEE "CORROSION PROTECTION FOR STEEL PILES DETAIL", SHEET 4 OF 4.

NOTES

STIRRUPS IN CAP MAY BE SHIFTED AS NECESSARY TO CLEAR DOWELS.

THE LATERAL GUIDES ARE NOT TO BE POURED UNTIL AFTER THE CORED SLAB UNITS ARE IN PLACE.

THE CONCRETE IN THE SHADED AREA OF THE WING SHALL BE POURED AFTER THE VERTICAL CONCRETE BARRIER RAIL IS CAST IF SLIP FORMING IS USED.

FOR PILE SPLICE DETAILS, SEE SHEET 4 OF 4.

FOR WING DETAILS, SEE SHEET 3 OF 4.

THE CONTRACTOR HAS THE OPTION TO OMIT THE LATERAL GUIDE IF APPROVED BY THE ENGINEER.

INSTALL THE 4" DIA. DRAIN PIPE THROUGH THE WING WALL AS REQUIRED FOR REINFORCED BRIDGE APPROACH FILLS. SEE THE ROADWAY PLANS. REINFORCING STEEL IN THE WING WALL MAY BE SHIFTED AS NECESSARY TO CLEAR THE DRAIN PIPE.

PROJECT NO. BD-51030
PENDER COUNTY
STATION: 14+80.00 -L-

SHEET 2 OF 4

STATE OF NORTH CAROLINA
DEPARTMENT OF TRANSPORTATION
RALEIGH

SUBSTRUCTURE

END BENT No. 2

NORTH CAROLINA PROFESSIONAL SEAL 025516 ENGINEER EMILY E. MURRAY
3/6/12

REVISIONS						SHEET NO.
NO.	BY:	DATE:	NO.	BY:	DATE:	S-14
1			3			TOTAL SHEETS
2			4			21

ASSEMBLED BY : E. K. POPE	DATE : 2-21-12
CHECKED BY : E. E. MURRAY	DATE : 3-5-12
DRAWN BY : DGE 03/10	
CHECKED BY : MKT 03/10	

06-MAR-2012 15:11
S:\DPGI\Emily\BDProjects\BD-51030\BD51030_SD_CS.dgn
emurray

STD. NO. EB_33_75S

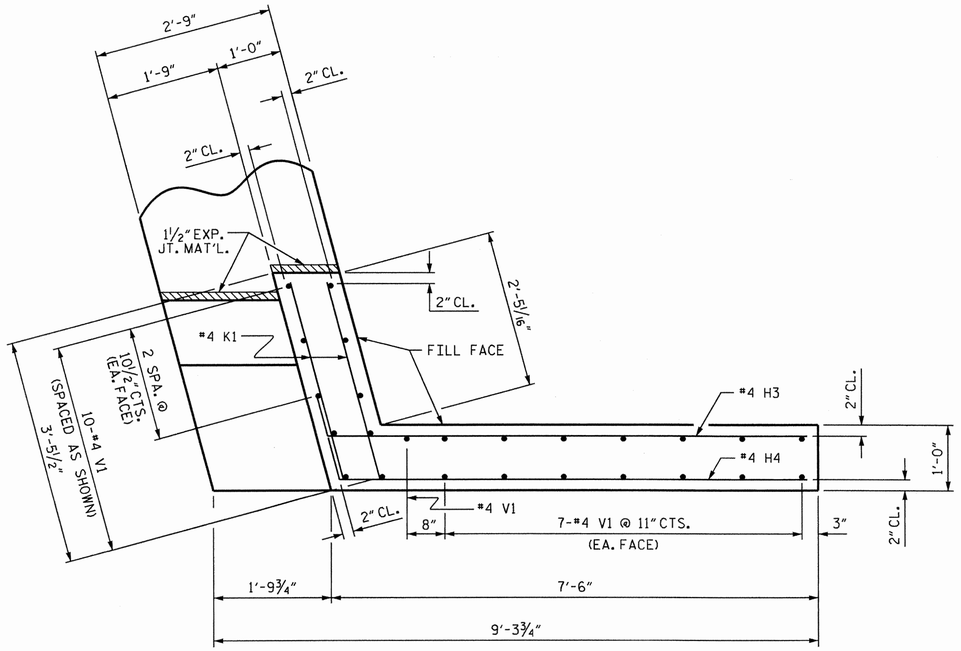

PLAN OF WING (W1)

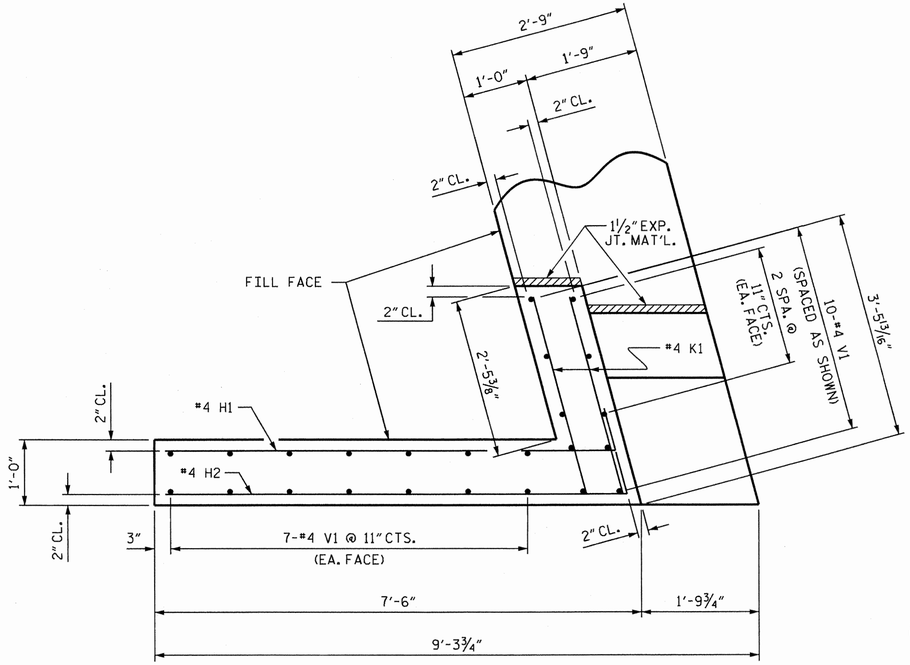

PLAN OF WING (W2)

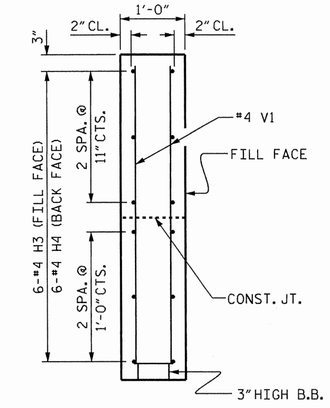

SECTION X-X

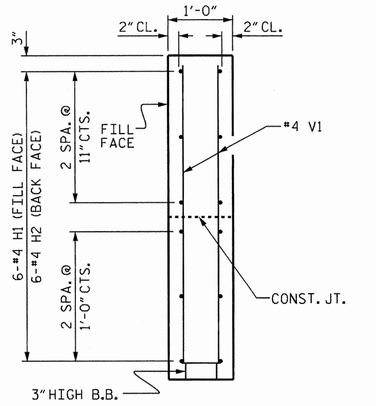

SECTION Y-Y

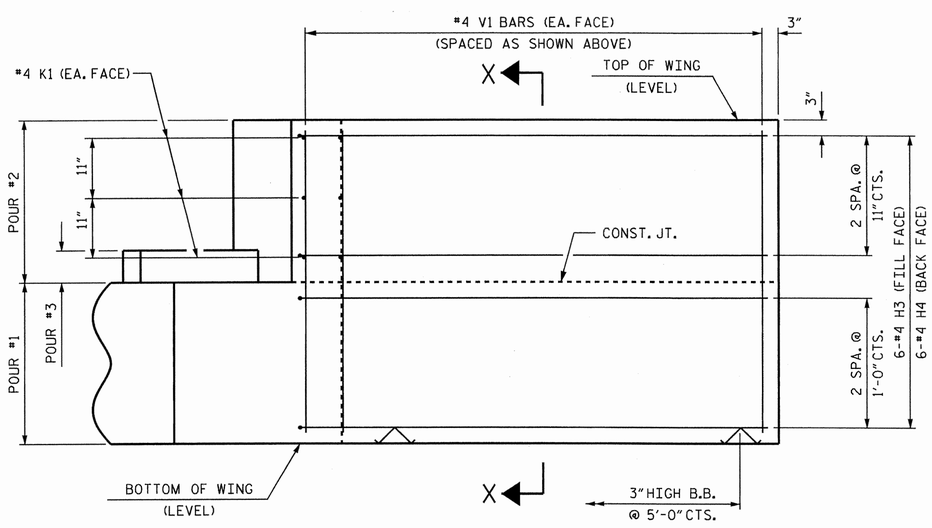

ELEVATION OF WING (W1)

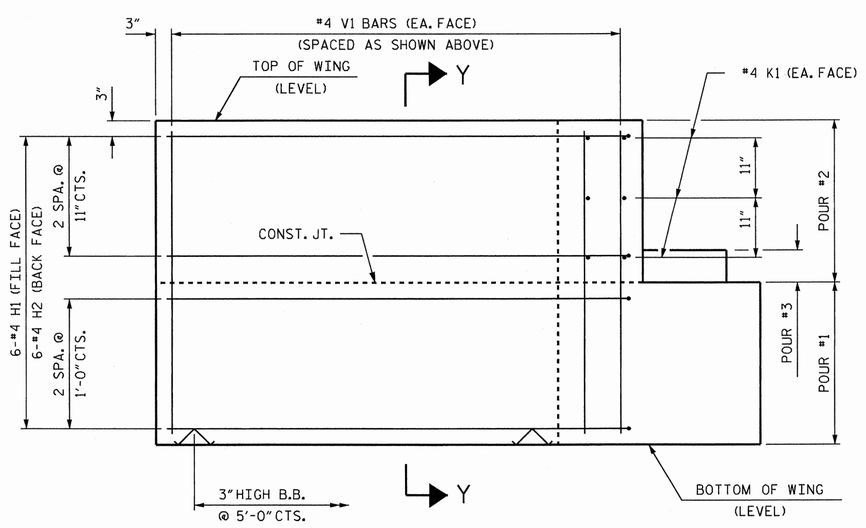

ELEVATION OF WING (W2)

WING DETAILS

ASSEMBLED BY : E. K. POPE	DATE : 2-21-12
CHECKED BY : E. E. MURRAY	DATE : 3-5-12
DRAWN BY : DGE 03/10	
CHECKED BY : MKT 03/10	

06-MAR-2012 15:11
S:\DPGI\Emily\BDProjects\BD-51030\BD51030_SD_CS.dgn
emurray

NORTH CAROLINA PROFESSIONAL SEAL 025516 ENGINEER EMILY E. MURRAY
3/6/12

PROJECT NO. BD-51030
PENDER COUNTY
STATION: 14+80.00 -L-

SHEET 3 OF 4

STATE OF NORTH CAROLINA
DEPARTMENT OF TRANSPORTATION
RALEIGH

SUBSTRUCTURE
END BENT
WING DETAILS

REVISIONS						SHEET NO.
NO.	BY:	DATE:	NO.	BY:	DATE:	S-15
1			3			TOTAL SHEETS
2			4			21

STD. NO. EB_33_75S

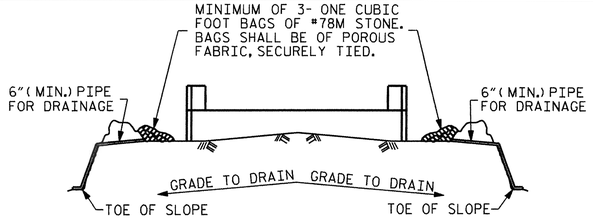

BAGGED STONE AND PIPE SHALL BE PLACED IMMEDIATELY AFTER COMPLETION OF END BENT EXCAVATION. PIPE MAY BE EITHER CONCRETE, CORRUGATED STEEL, CORRUGATED ALUMINUM ALLOY, OR CORRUGATED PLASTIC. PERFORATED PIPE WILL NOT BE ALLOWED.

BAGGED STONE SHALL REMAIN IN PLACE UNTIL THE ENGINEER DIRECTS THAT IT BE REMOVED. THE CONTRACTOR SHALL REMOVE AND DISPOSE OF SILT ACCUMULATIONS AT BAGGED STONE WHEN SO DIRECTED BY THE ENGINEER. BAGS SHALL BE REMOVED AND REPLACED WHENEVER THE ENGINEER DETERMINES THAT THEY HAVE DETERIORATED AND LOST THEIR EFFECTIVENESS.

NO SEPARATE PAYMENT WILL BE MADE FOR THIS WORK AND THE ENTIRE COST OF THIS WORK SHALL BE INCLUDED IN THE UNIT CONTRACT PRICE BID FOR THE SEVERAL PAY ITEMS.

TEMPORARY DRAINAGE AT END BENT

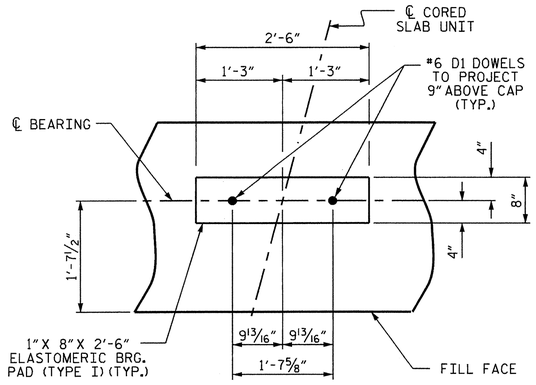

DETAIL "A"

(END BENT No. 1 SHOWN, END BENT No. 2 SIMILAR BY ROTATION)

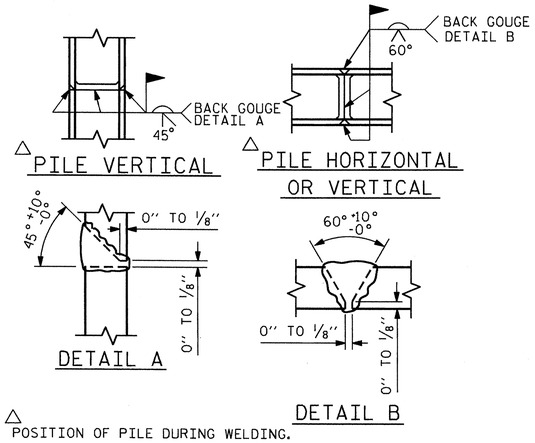

△ POSITION OF PILE DURING WELDING.

PILE SPLICE DETAILS

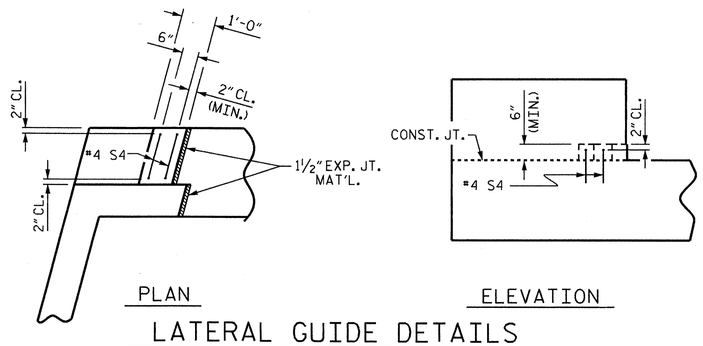

LATERAL GUIDE DETAILS

(END BENT No. 1, LEFT LATERAL GUIDE SHOWN, RIGHT END SIMILAR)
(END BENT No. 2 SIMILAR BY ROTATION)

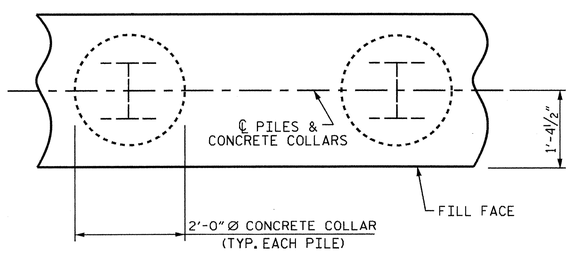

PLAN

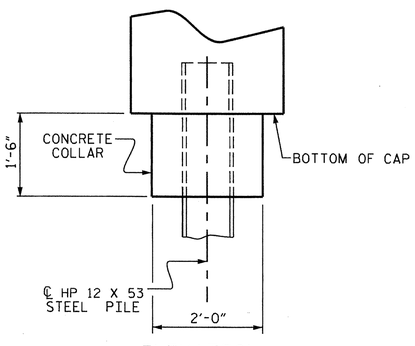

ELEVATION

CORROSION PROTECTION FOR STEEL PILES DETAIL

(END BENT No. 1 SHOWN, END BENT No. 2 SIMILAR BY ROTATION)

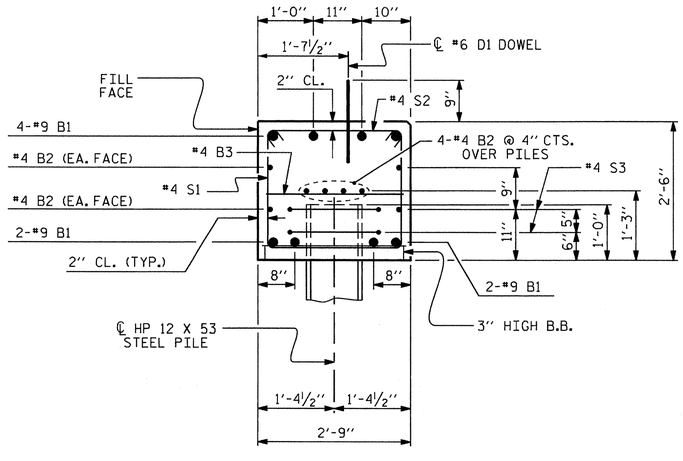

SECTION A-A

(CONCRETE COLLAR NOT SHOWN FOR CLARITY.
SEE "CORROSION PROTECTION FOR STEEL PILES DETAIL.")

BAR TYPES

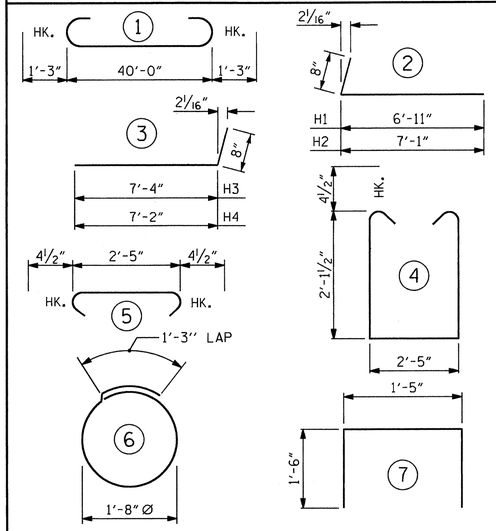

ALL BAR DIMENSIONS ARE OUT TO OUT.

END BENT No. 1		END BENT No. 2	
HP 12 X 53 STEEL PILES		HP 12 X 53 STEEL PILES	
NO: 7	LIN. FT.= 420	NO: 7	LIN. FT.= 420
PILE REDRIVES EA.	4	PILE REDRIVES EA.	4

BILL OF MATERIAL

FOR ONE END BENT

BAR	NO.	SIZE	TYPE	LENGTH	WEIGHT
B1	8	#9	1	42'-6"	1156
B2	16	#4	STR	21'-4"	228
B3	10	#4	STR	2'-5"	16
D1	22	#6	STR	1'-6"	50
H1	6	#4	2	7'-7"	30
H2	6	#4	2	7'-9"	31
H3	6	#4	3	8'-0"	32
H4	6	#4	3	7'-10"	31
K1	12	#4	STR	3'-1"	25
S1	52	#4	4	7'-5"	258
S2	52	#4	5	3'-2"	110
S3	14	#4	6	6'-6"	61
S4	4	#4	7	4'-5"	12
V1	49	#4	STR	4'-8"	153

REINFORCING STEEL (FOR ONE END BENT) 2193 LBS.

CLASS A CONCRETE BREAKDOWN (FOR ONE END BENT)

POUR #1	CAP, LOWER PART OF WINGS & COLLARS	12.7 C.Y.
POUR #2	UPPER PART OF WINGS	1.8 C.Y.
POUR #3	LATERAL GUIDES	0.1 C.Y.
TOTAL CLASS A CONCRETE		14.6 C.Y.

ASSEMBLED BY : E. K. POPE	DATE : 2-21-12		
CHECKED BY : E. E. MURRAY	DATE : 3-5-12		
DRAWN BY : DGE 03/10			
CHECKED BY : MKT 03/10			

06-MAR-2012 15:11
S:\DPGI\Emily\BDProjects\BD-51030\BD51030_SD_CS.dgn
emurray

NORTH CAROLINA PROFESSIONAL SEAL 025516 ENGINEER EMILY E. MURRAY
3/6/12

PROJECT NO. BD-51030
PENDER COUNTY
STATION: 14+80.00 -L-

SHEET 4 OF 4

STATE OF NORTH CAROLINA
DEPARTMENT OF TRANSPORTATION
RALEIGH

SUBSTRUCTURE

END BENT No. 1 & 2 DETAILS

REVISIONS						SHEET NO.
NO.	BY:	DATE:	NO.	BY:	DATE:	5-16
1			3			TOTAL SHEETS
2			4			21

STD. NO. EB_33_75S

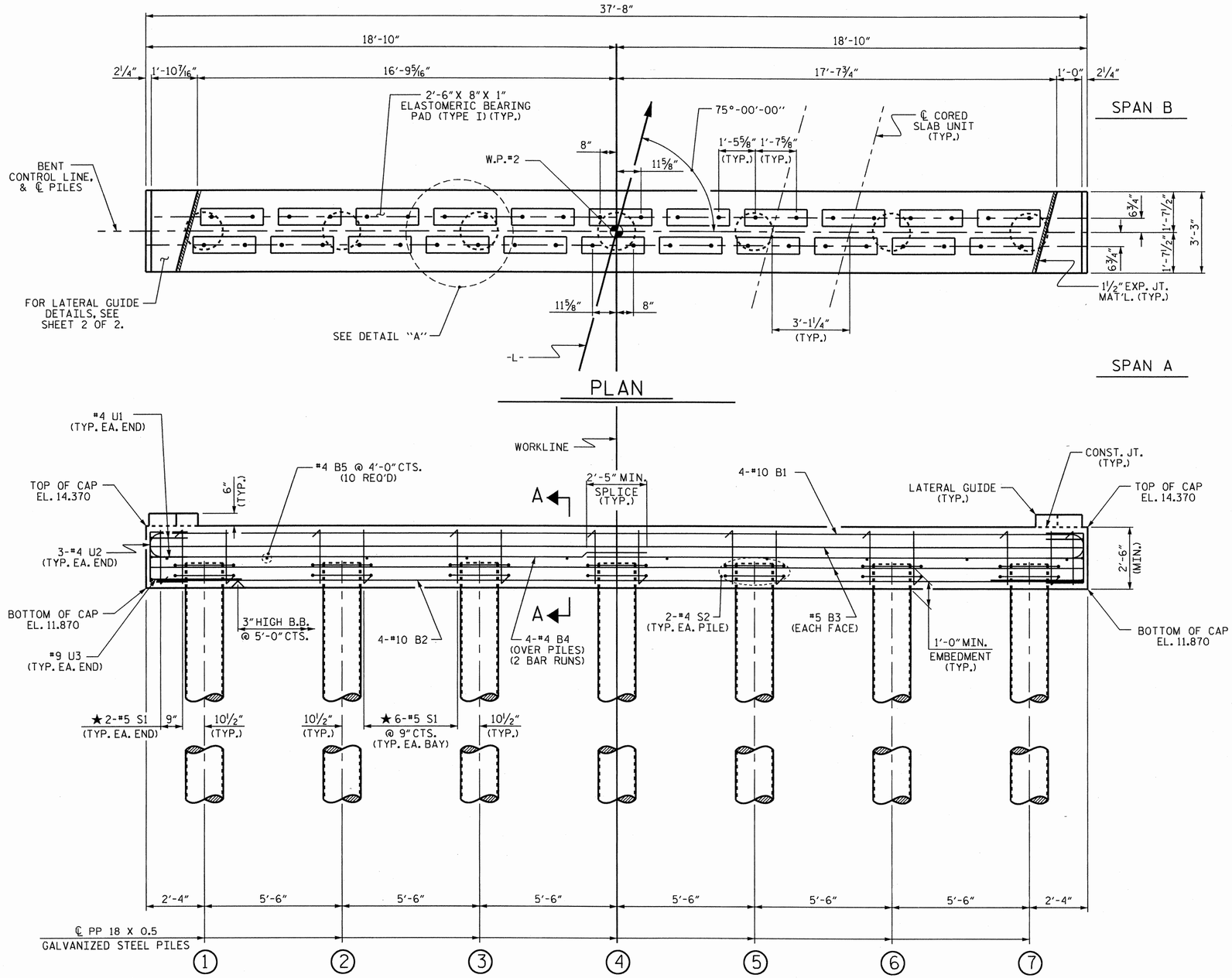

ELEVATION

FOR SECTION A-A, SEE SHEET 2 OF 3

NOTES

STIRRUPS IN CAP MAY BE SHIFTED AS NECESSARY TO CLEAR DOWELS.

THE LATERAL GUIDES ARE NOT TO BE POURED UNTIL AFTER THE CORED SLAB UNITS ARE IN PLACE.

★ INVERT ALTERNATE STIRRUPS.

FOR ADDITIONAL REINFORCING STEEL IN PP 18 X 0.5 GALVANIZED STEEL PILES, SEE SHEET 3 OF 3.

THE CONTRACTOR HAS THE OPTION TO OMIT THE LATERAL GUIDE IF APPROVED BY THE ENGINEER.

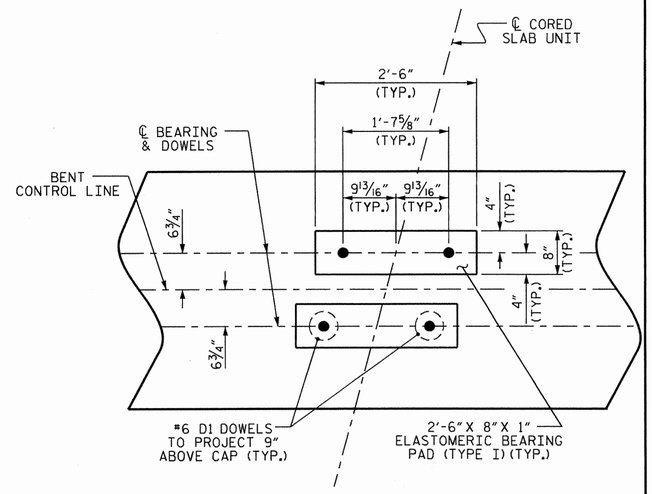

DETAIL "A"

(DIMENSIONS ARE TYPICAL EACH BEARING)

PROJECT NO. BD-51030

PENDER COUNTY

STATION: 14+80.00 -L-

SHEET 1 OF 3

STATE OF NORTH CAROLINA
DEPARTMENT OF TRANSPORTATION
RALEIGH

SUBSTRUCTURE

BENT No. 1

NORTH CAROLINA PROFESSIONAL SEAL 025516 ENGINEER EMILY E. MURRAY

3/6/12

REVISIONS						SHEET NO.
NO.	BY:	DATE:	NO.	BY:	DATE:	5-17
1			3			TOTAL SHEETS
2			4			21

ASSEMBLED BY :	E. K. POPE	DATE : 2-21-12
CHECKED BY :	E. E. MURRAY	DATE : 3-5-12
DRAWN BY : DGE 6/10		
CHECKED BY : MKT 6/10		

06-MAR-2012 15:12
S:\DPG1\Emily\BDProjects\BD-51030\BD51030_SD_CS.dgn
emurray

STD. NO. 18"PP_BT_33_75S_<60'

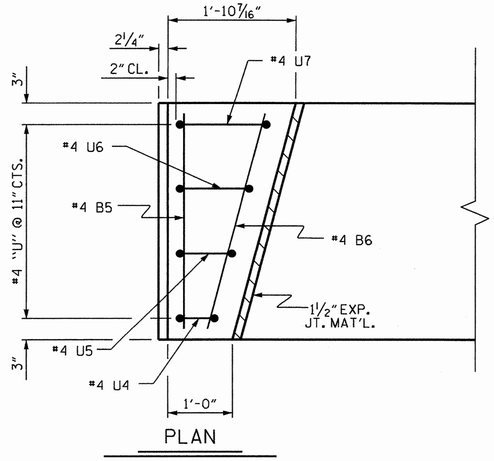

PLAN

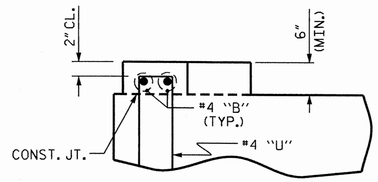

ELEVATION

LATERAL GUIDE DETAILS

(LEFT LATERAL GUIDE SHOWN, RIGHT SIDE SIMILAR)

BAR TYPES

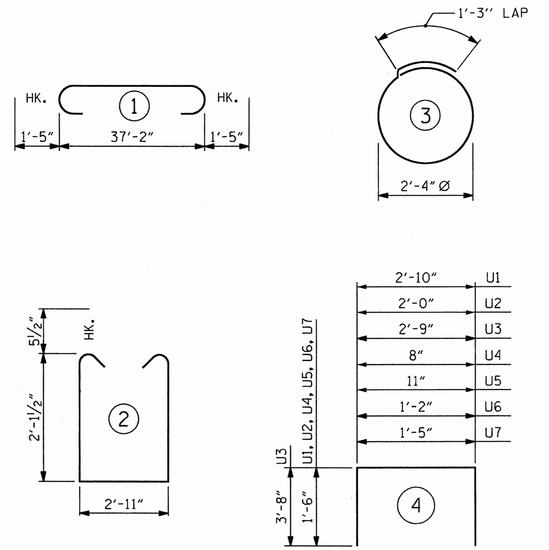

ALL BAR DIMENSIONS ARE OUT TO OUT.

BILL OF MATERIAL

FOR ONE BENT

BAR	NO.	SIZE	TYPE	LENGTH	WEIGHT
B1	4	#10	1	40'-0"	688
B2	4	#10	STR	37'-4"	643
B3	4	#5	STR	37'-4"	156
B4	8	#4	STR	19'-11"	106
B5	12	#4	STR	2'-11"	23
B6	2	#4	STR	3'-0"	4
D1	44	#6	STR	1'-6"	99
S1	40	#5	2	8'-1"	337
S2	14	#4	3	8'-7"	80
U1	4	#4	4	5'-10"	16
U2	6	#4	4	5'-0"	20
U3	2	#9	4	10'-1"	69
U4	2	#4	4	3'-8"	5
U5	2	#4	4	3'-11"	5
U6	2	#4	4	4'-2"	6
U7	2	#4	4	4'-5"	6

REINFORCING STEEL (FOR ONE BENT) 2263 LBS

CLASS A CONCRETE BREAKDOWN (FOR ONE BENT)

POUR #1 (CAP)	▲ 10.9 C.Y.
POUR #2 (LATERAL GUIDES)	0.2 C.Y.
TOTAL CLASS A CONCRETE	11.1 C.Y.

PP 18 X 0.5 GALVANIZED STEEL PILES (FOR ONE BENT)

No. 7	LIN. FT. 490
STEEL PILE POINTS	No. = 7
PILE REDRIVES EA.	No. = 4
PDA TESTING	No. = 1

▲ CONCRETE DISPLACED BY THE PP 18 X 0.5 GALVANIZED STEEL PILES HAS BEEN DEDUCTED FROM THE CONCRETE QUANTITY.

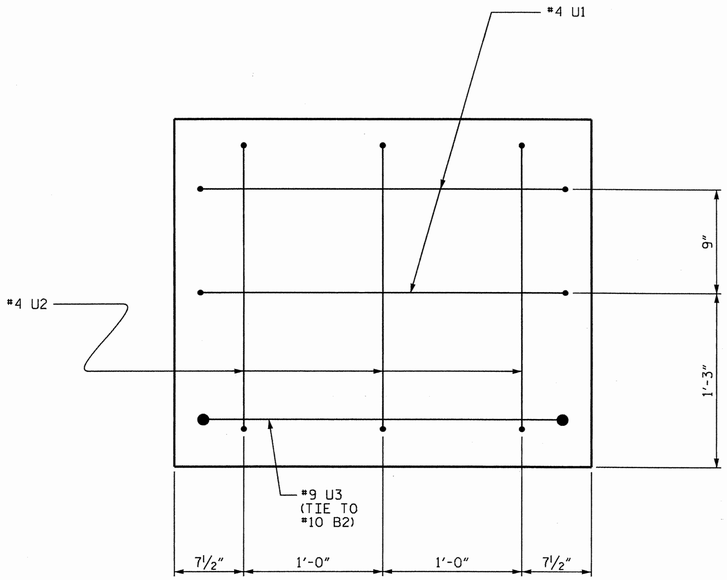

END OF CAP VIEW

(TYPICAL BOTH ENDS)

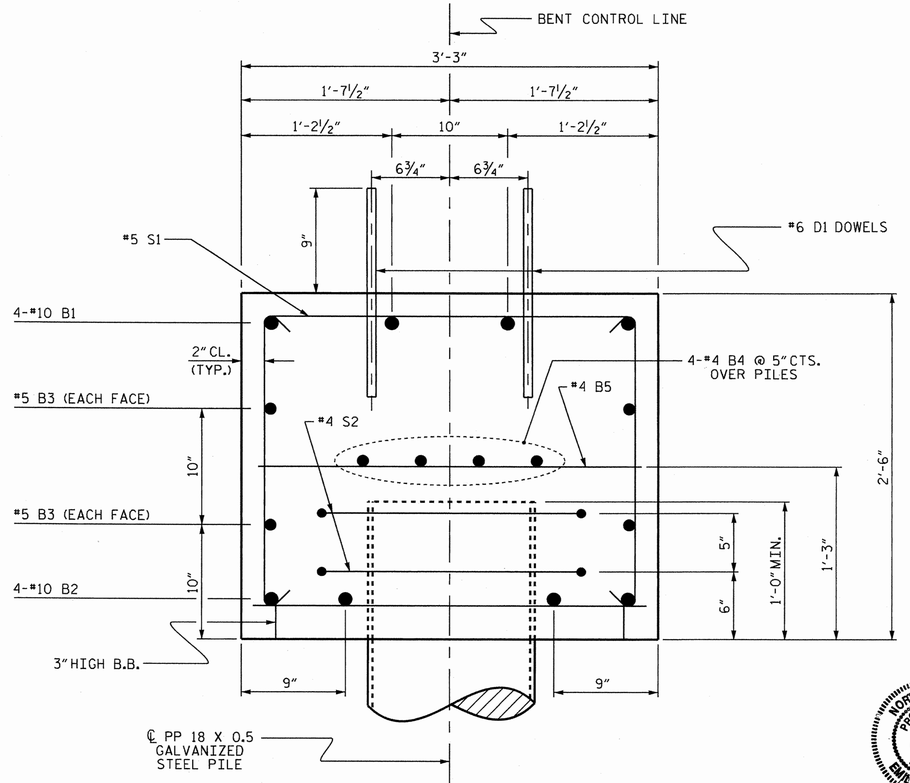

SECTION A-A

NORTH CAROLINA PROFESSIONAL SEAL 025516 ENGINEER EMILY E. MURRAY 3/16/12

PROJECT NO. BD-51030

PENDER COUNTY

STATION: 14+80.00 -L-

SHEET 2 OF 3

STATE OF NORTH CAROLINA
DEPARTMENT OF TRANSPORTATION
RALEIGH

SUBSTRUCTURE

BENT No. 1

REVISIONS						SHEET NO.
NO.	BY:	DATE:	NO.	BY:	DATE:	S-18
1			3			TOTAL SHEETS
2			4			21

DRAWN BY : E. K. POPE	DATE : 2-21-12
CHECKED BY : E. E. MURRAY	DATE : 3-5-12
DRAWN BY : DGE 06/10	
CHECKED BY : MKT 06/10	

06-MAR-2012 15:12
S:\DPG1\Emily\BDProjects\BD-51030\BD51030_SD_CS.dgn
emurray

STD.NO. 18"PP_BT_33_75S_<60'

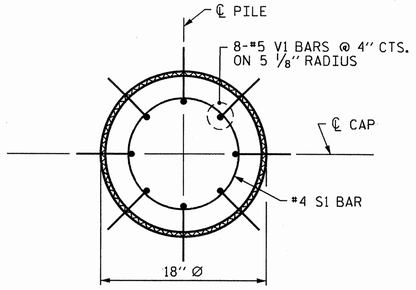

PLAN

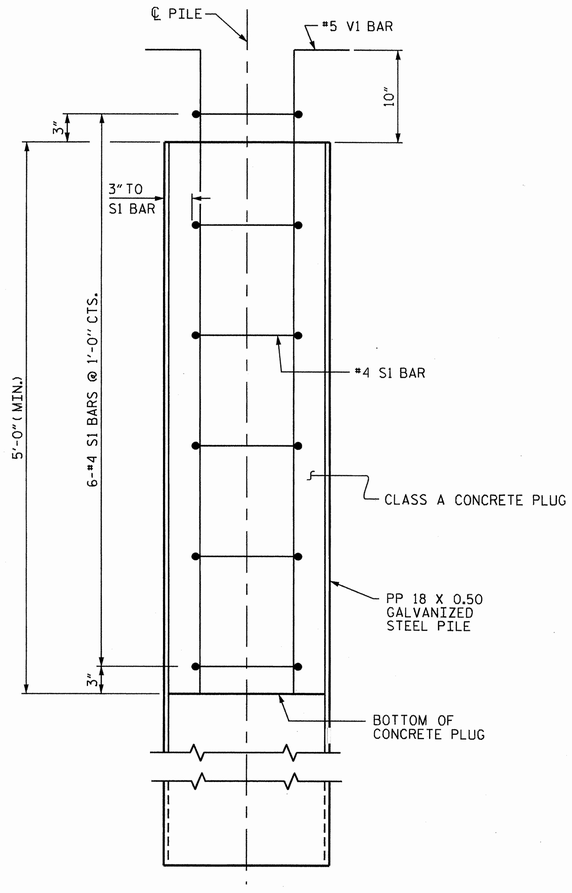

ELEVATION

PP 18 X 0.50 GALVANIZED STEEL PILE

(OPEN OR CLOSED END)

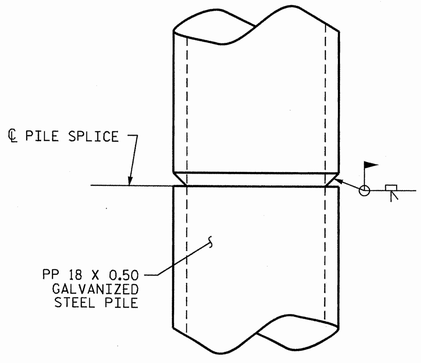

PIPE PILE SPLICE DETAIL

NOTES

PIPE PILES SHALL BE IN ACCORDANCE WITH SECTION 1084 OF THE STANDARD SPECIFICATIONS.

GALVANIZE STEEL PIPE PILES IN ACCORDANCE WITH SECTION 1076 OF THE STANDARD SPECIFICATIONS UNLESS METALLIZING IS REQUIRED.

REMOVE AND REPLACE OR REPAIR TO THE SATISFACTION OF THE ENGINEER PILES THAT ARE DAMAGED, DEFORMED OR COLLAPSED DURING INSTALLATION OR DRIVING.

PILE SPLICES SHALL BE IN ACCORDANCE WITH THE STANDARD SPECIFICATIONS AND AWS D1.1.

FOR OPEN END PIPE PILES, REMOVE ENOUGH SOIL AND WATER FROM INSIDE THE PILES TO CONSTRUCT THE CONCRETE PLUG WITHOUT FOULING THE CONCRETE.

FORM THE CONCRETE PLUG SUCH THAT THE REINFORCING STEEL OR CONCRETE DOES NOT MOVE AND THE CLEARANCE FROM THE REINFORCING STEEL TO THE INSIDE OF THE PILE IS MAINTAINED AFTER CONCRETE PLACEMENT. DO NOT PLACE CONCRETE IN THE BENT CAP UNTIL THE CONCRETE PLUG HAS ATTAINED A MINIMUM COMPRESSIVE STRENGTH OF 1500 PSI.

THE REINFORCING STEEL, CLASS A CONCRETE, AND GALVANIZING ARE CONSIDERED INCIDENTAL TO THE CONTRACT UNIT PRICE BID PER LINEAR FOOT FOR PP 18 X 0.50 GALVANIZED STEEL PILES.

BILL OF MATERIAL FOR ONE PP 18 X 0.50 GALVANIZED STEEL PILE

BAR	NO.	SIZE	TYPE	LENGTH	WEIGHT
S1	6	#4	1	4'-5"	18
V1	8	#5	2	6'-8"	56
REINFORCING STEEL =				74	lbs
CLASS A CONCRETE					
5'-0" MINIMUM PLUG					0.3 CY

BAR TYPES

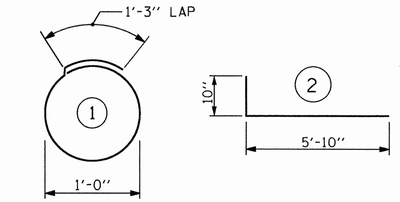

ALL BAR DIMENSIONS ARE OUT TO OUT.

PROJECT NO. BD-51030

PENDER COUNTY

STATION: 14+80.00 -L-

SHEET 3 OF 3

STATE OF NORTH CAROLINA
DEPARTMENT OF TRANSPORTATION
RALEIGH

STANDARD

18" STEEL PIPE PILE

REVISIONS					
NO.	BY:	DATE:	NO.	BY:	DATE:
1			3		
2			4		

SHEET NO. S-19

TOTAL SHEETS 21

STD. NO. SPP3

NORTH CAROLINA PROFESSIONAL SEAL 025618 ENGINEER EMILY E. MURRAY

3/6/12

ASSEMBLED BY : E. K. POPE	DATE : 2-21-12		
CHECKED BY : E. E. MURRAY	DATE : 3-5-12		
DRAWN BY : RWW 1/01	REV. 10/1/05	LBG/TLA	
CHECKED BY : LES 1/01	REV. 5/1/06R	MAA/KMM	
	REV. 10/1/11	MAA/GM	

06-MAR-2012 15:29
S:\DPGI\Emily\BDProjects\BD-51030\BD51030_SD_CS.dgn
emurray

NOTES :

FOR BERM WIDTH DIMENSIONS, SEE GENERAL DRAWING.

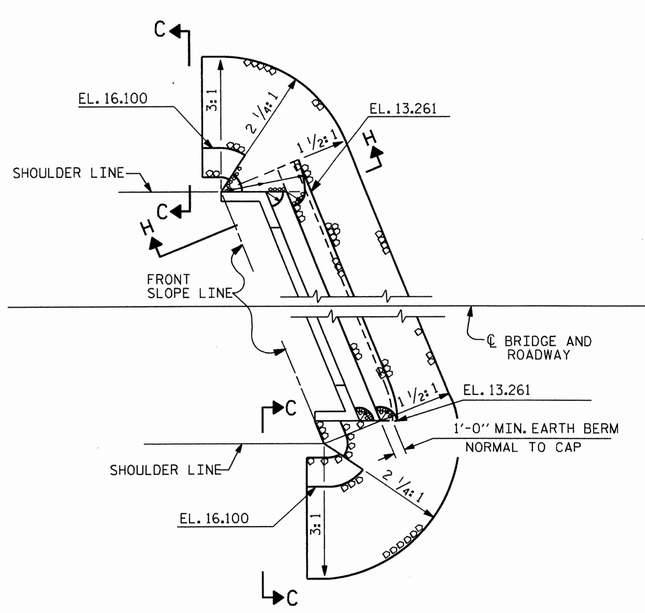

END BENT 1

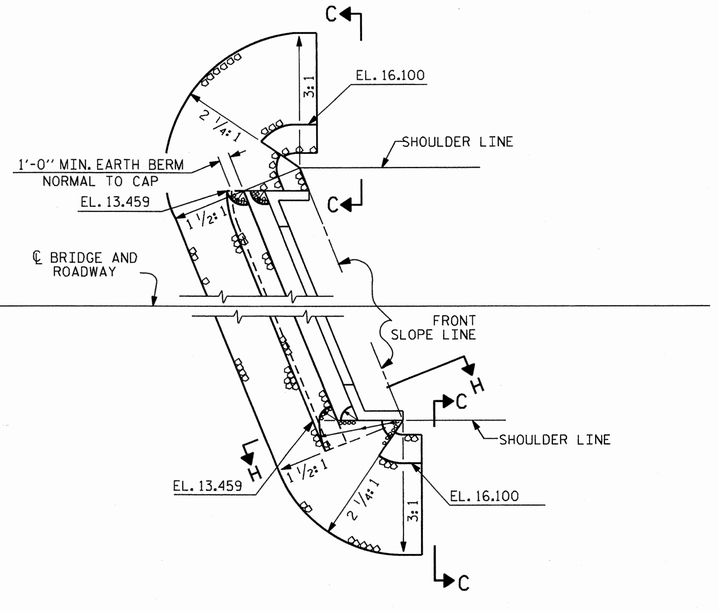

END BENT 2

PLAN OF RIP RAP

ESTIMATED QUANTITIES		
BRIDGE @ STA.	RIP RAP CLASS II (2'-0" THICK)	GEOTEXTILE FOR DRAINAGE
	TONS	SQUARE YARDS
END BENT 1	70	75
END BENT 2	70	75

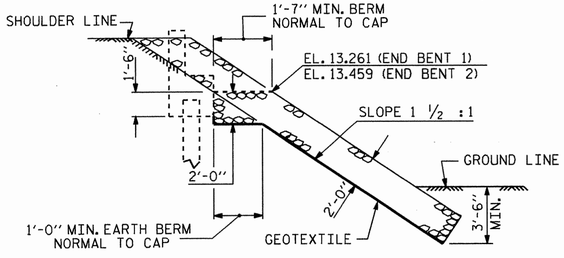

SECTION H-H

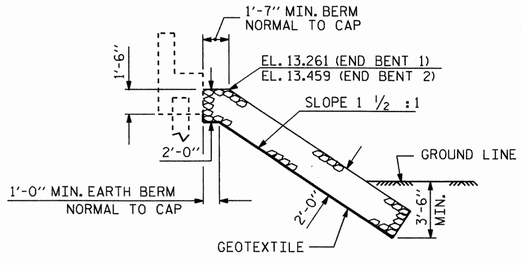

℄ SECTION

BERM RIP RAPPED

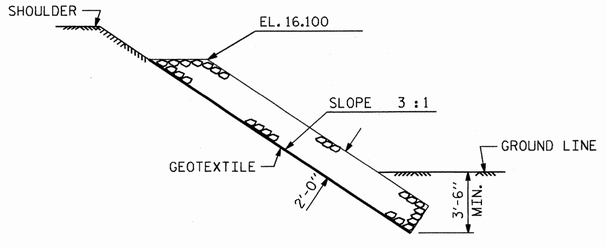

SECTION C-C

PROJECT NO. BD-51030

PENDER COUNTY

STATION: 14+80.00 -L-

STATE OF NORTH CAROLINA
DEPARTMENT OF TRANSPORTATION
RALEIGH

STANDARD

RIP RAP DETAILS

NORTH CAROLINA PROFESSIONAL SEAL 025516 ENGINEER EMILY E. MURRAY

3/6/12

REVISIONS						SHEET NO.
NO.	BY:	DATE:	NO.	BY:	DATE:	S-20
1			3			TOTAL SHEETS
2			4			21

ASSEMBLED BY : E. K. POPE	DATE : 2-21-12	
CHECKED BY : E. E. MURRAY	DATE : 3-5-12	
DRAWN BY : REK 1/84	REV. 5/1/06R	TLA/GM
CHECKED BY : RDU 1/84	REV. 10/1/11	MAA/GM
	REV. 12/21/11	MAA/GM

06-MAR-2012 15:13
S:\DPGI\Emily\BDProjects\BD-51030\BD51030_SD_CS.dgn
emurray

STD. NO. RR1 (Sht 1)

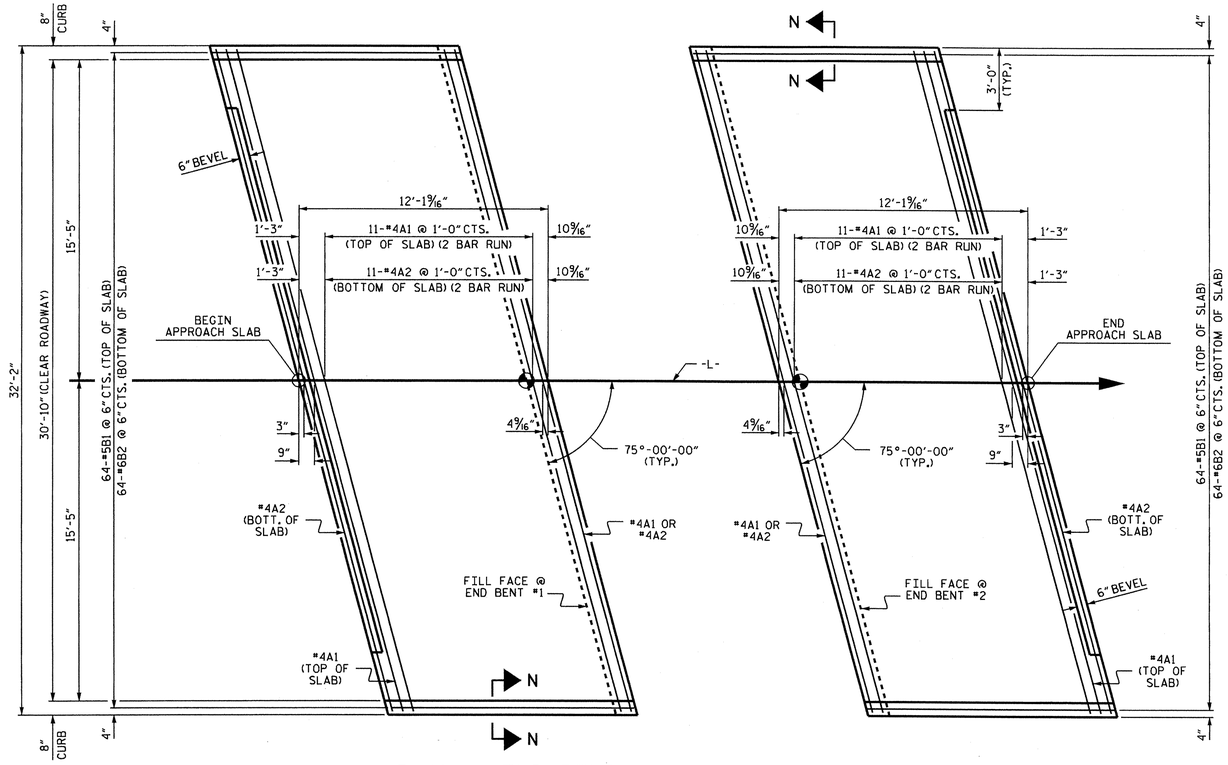

DIMENSIONS SHOWN ARE TYPICAL FOR BOTH APPROACH SLABS

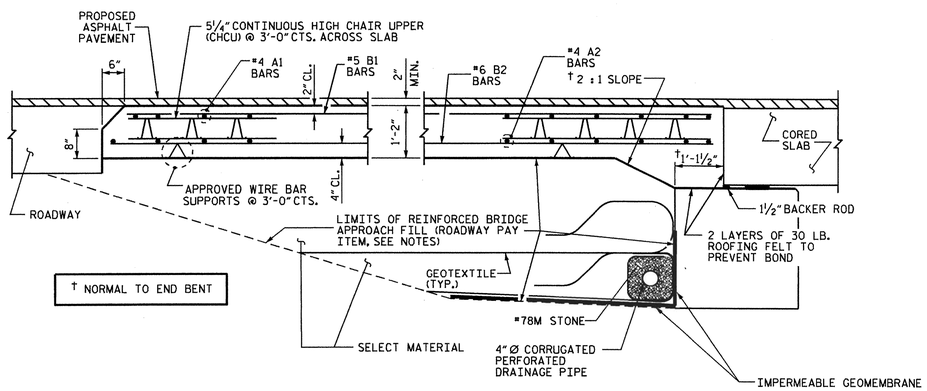

SECTION THRU SLAB

NOTES

FOR REINFORCED BRIDGE APPROACH FILL INCLUDING GEOTEXTILE, IMPERMEABLE GEOMEMBRANE, 4" Ø DRAINAGE PIPE, #78M STONE, AND SELECT MATERIAL, SEE ROADWAY PLANS.

AREA BETWEEN THE WINGWALL AND APPROACH SLAB SHALL BE GRADED TO DRAIN THE WATER AWAY FROM THE FILL FACE OF THE BRIDGE AND SHALL BE PAVED. SEE ROADWAY PLANS.

APPROACH SLAB GROOVING IS NOT REQUIRED.

BILL OF MATERIAL

APPROACH SLAB AT EB #1

BAR	NO.	SIZE	TYPE	LENGTH	WEIGHT
* A1	26	#4	STR	17'-6"	304
A2	26	#4	STR	17'-5"	302
* B1	64	#5	STR	11'-1"	740
B2	64	#6	STR	11'-7"	1113
REINFORCING STEEL				LBS.	1415
* EPOXY COATED REINFORCING STEEL				LBS.	1044
CLASS AA CONCRETE				C. Y.	18.7

APPROACH SLAB AT EB #2

BAR	NO.	SIZE	TYPE	LENGTH	WEIGHT
* A1	26	#4	STR	17'-6"	304
A2	26	#4	STR	17'-5"	302
* B1	64	#5	STR	11'-1"	740
B2	64	#6	STR	11'-7"	1113
REINFORCING STEEL				LBS.	1415
* EPOXY COATED REINFORCING STEEL				LBS.	1044
CLASS AA CONCRETE				C. Y.	18.7

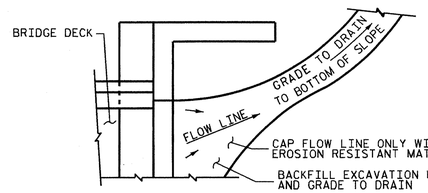

NOTE: IF THE APPROACH SLAB IS NOT CONSTRUCTED IMMEDIATELY AFTER THE BACKFILLING OF THE END BENT EXCAVATION, GRADE TO DRAIN TO THE BOTTOM OF THE SLOPE AND PROVIDE EROSION RESISTANT MATERIAL, SUCH AS FIBERGLASS ROVING OR AS DIRECTED BY THE ENGINEER TO PREVENT SOIL EROSION AND TO PROTECT THE AREA ADJACENT TO THE STRUCTURE. THE CONTRACTOR WILL BE REQUIRED TO REMOVE THESE MATERIALS PRIOR TO CONSTRUCTION OF THE APPROACH SLAB.

TEMPORARY DRAINAGE DETAIL

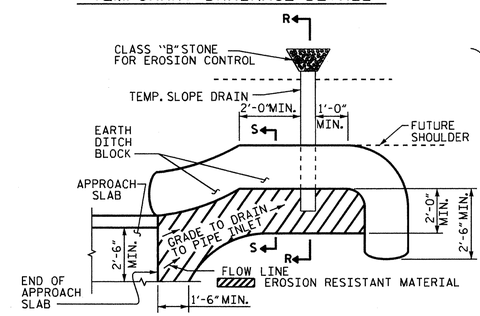

NOTE: IMMEDIATELY AFTER THE CONSTRUCTION OF THE APPROACH SLAB, THE CONTRACTOR SHALL PROVIDE TEMPORARY BERM AND SLOPE DRAIN. CONTRACTOR SHALL GRADE TO PIPE INLET AND PROVIDE EROSION RESISTANT MATERIAL AS SHOWN. THE EROSION RESISTANT MATERIAL SHALL BE EITHER 1) ASPHALT PLANT MIX, TYPE 1 OR TYPE 2, MIN. 2" DEPTH, 2) EROSION CONTROL MAT, OR 3) CONCRETE, AS DIRECTED BY THE ENGINEER. THE SLOPE DRAIN SHALL CONSIST OF A NON-PERFORATED TEMPORARY DRAINAGE PIPE, 12 INCHES IN DIAMETER.

PLAN VIEW

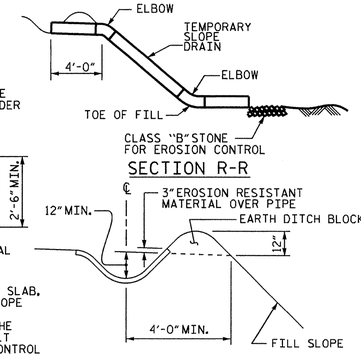

SECTION S-S

TEMPORARY BERM AND SLOPE DRAIN DETAILS

(TO BE USED WHEN SHOULDER BERM GUTTER IS REQUIRED)

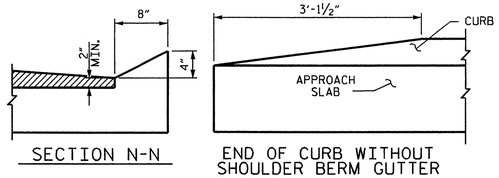

CURB DETAILS

SPLICE LENGTHS		
BAR SIZE	EPOXY COATED	UNCOATED
#4	2'-0"	1'-9"
#5	2'-6"	2'-2"
#6	3'-10"	2'-7"

NORTH CAROLINA PROFESSIONAL SEAL 025516 ENGINEER EMILY E. MURRAY
3/6/12

PROJECT NO. BD-51030
PENDER COUNTY
STATION: 14+80.00 -L-

STATE OF NORTH CAROLINA
DEPARTMENT OF TRANSPORTATION
RALEIGH

STANDARD BRIDGE APPROACH SLAB FOR PRESTRESSED CONCRETE CORED SLAB UNIT

75° SKEW

REVISIONS						SHEET NO.
NO.	BY:	DATE:	NO.	BY:	DATE:	S-21
1			3			TOTAL SHEETS
2			4			21

ASSEMBLED BY :	E. K. POPE	DATE :	2-21-12
CHECKED BY :	E. E. MURRAY	DATE :	3-5-12
DRAWN BY : SHS/MAA 5-09	REV. 12-11		MAA/AAC
CHECKED BY : BCH 5-09			

06-MAR-2012 15:12
S:\DPG1\Emily\BDProjects\BD-51030\BD51030_SD_CS.dgn
emurray

STD. NO. BAS_33_75S

STANDARD NOTES

DESIGN DATA:

SPECIFICATIONS	A.A.S.H.T.O. (CURRENT)
LIVE LOAD	SEE PLANS
IMPACT ALLOWANCE	SEE A.A.S.H.T.O.
STRESS IN EXTREME FIBER OF	
STRUCTURAL STEEL - AASHTO M270 GRADE 36	20,000 LBS. PER SQ. IN.
- AASHTO M270 GRADE 50W	27,000 LBS. PER SQ. IN.
- AASHTO M270 GRADE 50	27,000 LBS. PER SQ. IN.
REINFORCING STEEL IN TENSION	
GRADE 60	24,000 LBS. PER SQ. IN.
CONCRETE IN COMPRESSION	1,200 LBS. PER SQ. IN.
CONCRETE IN SHEAR	SEE A.A.S.H.T.O.
STRUCTURAL TIMBER - TREATED OR	
UNTREATED - EXTREME FIBER STRESS	1,800 LBS. PER SQ. IN.
COMPRESSION PERPENDICULAR TO GRAIN OF TIMBER	375 LBS. PER SQ. IN.
EQUIVALENT FLUID PRESSURE OF EARTH	30 LBS. PER CU. FT. (MINIMUM)

MATERIAL AND WORKMANSHIP:

EXCEPT AS MAY OTHERWISE BE SPECIFIED ON PLANS OR IN THE SPECIAL PROVISIONS, ALL MATERIAL AND WORKMANSHIP SHALL BE IN ACCORDANCE WITH THE 2012 "STANDARD SPECIFICATIONS FOR ROADS AND STRUCTURES" OF THE N. C. DEPARTMENT OF TRANSPORTATION.

STEEL SHEET PILING FOR PERMANENT OR TEMPORARY APPLICATIONS SHALL BE HOT ROLLED.

CONCRETE:

UNLESS OTHERWISE REQUIRED ON PLANS, CLASS A CONCRETE SHALL BE USED FOR ALL PORTIONS OF ALL STRUCTURES WITH THE EXCEPTION THAT: CLASS AA CONCRETE SHALL BE USED IN BRIDGE SUPERSTRUCTURES, ABUTMENT BACKWALLS, AND APPROACH SLABS; AND CLASS B CONCRETE SHALL BE USED FOR SLOPE PROTECTION AND RIP RAP.

CONCRETE CHAMFERS:

UNLESS OTHERWISE NOTED ON THE PLANS, ALL EXPOSED CORNERS ON STRUCTURES SHALL BE CHAMFERED 3/4" WITH THE FOLLOWING EXCEPTIONS: TOP CORNERS OF CURBS MAY BE ROUNDED TO 1-1/2" RADIUS WHICH IS BUILT INTO CURB FORMS; CORNERS OF TRANSVERSE FLOOR EXPANSION JOINTS SHALL BE ROUNDED WITH A 1/4" FINISHING TOOL UNLESS OTHERWISE REQUIRED ON PLANS; AND CORNERS OF EXPANSION JOINTS IN THE ROADWAY FACES AND TOPS OF CURBS AND SIDEWALKS SHALL BE ROUNDED TO A 1/4" RADIUS WITH A FINISHING STONE OR TOOL UNLESS OTHERWISE REQUIRED ON PLANS.

DOWELS:

DOWELS WHEN INDICATED ON PLANS AS FOR CULVERT EXTENSIONS, SHALL BE EMBEDDED AT LEAST 12" INTO THE OLD CONCRETE AND GROUTED INTO PLACE WITH 1:2 CEMENT MORTAR.

ALLOWANCE FOR DEAD LOAD DEFLECTION, SETTLEMENT, ETC. IN CASTING SUPERSTRUCTURES:

BRIDGES SHALL BE BUILT ON THE GRADE OR VERTICAL CURVE SHOWN ON PLANS. SLABS, CURBS AND PARAPETS SHALL CONFORM TO THE GRADE OR CURVE.

ALL DIMENSIONS WHICH ARE GIVEN IN SECTION AND ARE AFFECTED BY DEAD LOAD DEFLECTIONS ARE DIMENSIONS AT CENTER LINE OF BEARING UNLESS OTHERWISE NOTED ON PLANS. IN SETTING FORMS FOR STEEL BEAM BRIDGES AND PRESTRESSED CONCRETE GIRDER BRIDGES, ADJUSTMENTS SHALL BE MADE DUE TO THE DEAD LOAD DEFLECTIONS FOR THE ELEVATIONS SHOWN. WHERE BLOCKS ARE SHOWN OVER BEAMS FOR BUILDING UP TO THE SLAB, THE VERTICAL DIMENSIONS OF THE BLOCKS SHALL BE ADJUSTED BETWEEN BEARINGS TO COMPENSATE FOR DEAD LOAD DEFLECTIONS, VERTICAL CURVE ORDINATE, AND ACTUAL BEAM CAMBER. WHERE BOTTOM OF SLAB IS IN LINE WITH BOTTOM OF TOP FLANGES, DEPTH OF SLAB BETWEEN BEARINGS SHALL BE ADJUSTED TO COMPENSATE FOR DEAD LOAD DEFLECTION, VERTICAL CURVE ORDINATE, AND ACTUAL BEAM CAMBER.

IN SETTING FALSEWORK AND FORMS FOR REINFORCED CONCRETE SPANS, AN ALLOWANCE SHALL BE MADE FOR DEAD LOAD DEFLECTIONS, SETTLEMENT OF FALSEWORK, AND PERMANENT CAMBER WHICH SHALL BE PROVIDED FOR IN ADDITION TO THE ELEVATIONS SHOWN. AFTER REMOVAL OF THE FALSEWORK, THE FINISHED STRUCTURES SHALL CONFORM TO THE PROFILE AND ELEVATIONS SHOWN ON THE PLANS AND CONSTRUCTION ELEVATIONS FURNISHED BY THE ENGINEER.

DETAILED DRAWINGS FOR FALSEWORK OR FORMS FOR BRIDGE SUPERSTRUCTURE AND ANY STRUCTURE OR PARTS OF A STRUCTURE AS NOTED ON THE PLANS SHALL BE SUBMITTED TO THE ENGINEER FOR APPROVAL BEFORE CONSTRUCTION OF THE FALSEWORK OR FORMS IS STARTED.

REINFORCING STEEL:

ALL REINFORCING STEEL SHALL BE DEFORMED. DIMENSIONS RELATIVE TO PLACEMENT OF REINFORCING ARE TO CENTERS OF BARS UNLESS OTHERWISE INDICATED IN THE PLANS. DIMENSIONS ON BAR DETAILS ARE TO CENTERS OF BARS OR ARE OUT TO OUT AS INDICATED ON PLANS.

WIRE BAR SUPPORTS SHALL BE PROVIDED FOR REINFORCING STEEL WHERE INDICATED ON THE PLANS. WHEN BAR SUPPORT PIECES ARE PLACED IN CONTINUOUS LINES, THEY SHALL BE SO PLACED THAT THE ENDS OF THE SUPPORTING WIRES SHALL BE LAPPED TO LOCK LEGS ON ADJOINING PIECES.

STRUCTURAL STEEL:

AT THE CONTRACTOR'S OPTION, HE MAY SUBSTITUTE 7/8" Ø SHEAR STUDS FOR THE 3/4" Ø STUDS SPECIFIED ON THE PLANS. THIS SUBSTITUTION SHALL BE MADE AT THE RATE OF 3 - 7/8" Ø STUDS FOR 4 - 3/4" Ø STUDS, AND STUD SPACING CHANGES SHALL BE MADE AS NECESSARY TO PROVIDE THE SAME EQUIVALENT NUMBER OF 7/8" Ø STUDS ALONG THE BEAM AS SHOWN FOR 3/4" Ø STUDS BASED ON THE RATIO OF 3 - 7/8" Ø STUDS FOR 4 - 3/4" Ø STUDS. STUDS OF THE LENGTH SPECIFIED ON THE PLANS MUST BE PROVIDED. THE MAXIMUM SPACING SHALL BE 2'-0".

EXCEPT AT THE INTERIOR SUPPORTS OF CONTINUOUS BEAMS WHERE THE COVER PLATE IS IN CONTACT WITH BEARING PLATE, THE CONTRACTOR MAY, AT HIS OPTION, SUBSTITUTE FOR THE COVER PLATES DESIGNATED ON THE PLANS COVER PLATES OF THE EQUIVALENT AREA PROVIDED THESE PLATES ARE AT LEAST 5/16" IN THICKNESS AND DO NOT EXCEED A WIDTH EQUAL TO THE FLANGE WIDTH LESS 2" OR A THICKNESS EQUAL TO 2 TIMES THE FLANGE THICKNESS. THE SIZE OF FILLET WELDS SHALL CONFORM TO THE REQUIREMENTS OF THE CURRENT ANSI/AASHTO/AWS "BRIDGE WELDING CODE". ELECTROSLAG WELDING WILL NOT BE PERMITTED.

WITH THE SOLE EXCEPTION OF EDGES AT SURFACES WHICH BEAR ON OTHER SURFACES, ALL SHARP EDGES AND ENDS OF SHAPES AND PLATES SHALL BE SLIGHTLY ROUNDED BY SUITABLE MEANS TO A RADIUS OF APPROXIMATELY 1/16 INCH OR EQUIVALENT FLAT SURFACE AT A SUITABLE ANGLE PRIOR TO PAINTING, GALVANIZING, OR METALLIZING.

HANDRAILS AND POSTS:

METAL STANDARDS AND FACES OF THE CONCRETE END POSTS FOR THE METAL RAIL SHALL BE SET NORMAL TO THE GRADE OF THE CURB, UNLESS OTHERWISE SHOWN ON PLANS. THE METAL RAIL AND TOPS OF CONCRETE POSTS USED WITH THE ALUMINUM RAIL SHALL BE BUILT PARALLEL TO THE GRADE OF THE CURB.

METAL HANDRAILS SHALL BE IN ACCORDANCE WITH THE PLANS. RAILS SHALL BE AS MANUFACTURED FOR BRIDGE RAILING. CASTINGS SHALL BE OF A UNIFORM APPEARANCE. FINS AND OTHER DEFORMATIONS RESULTING FROM CASTING OR OTHERWISE SHALL BE REMOVED IN A MANNER SO THAT A UNIFORM COLORING OF THE COMPLETED CASTING SHALL BE OBTAINED. CASTINGS WITH DISCOLORATIONS OR OF NON-UNIFORM COLORING WILL NOT BE ACCEPTED. CERTIFIED MILL REPORTS ARE REQUIRED FOR METAL RAILS AND POSTS.

SPECIAL NOTES:

GENERALLY, IN CASE OF DISCREPANCY, THIS STANDARD SHEET OF NOTES SHALL GOVERN OVER THE SPECIFICATIONS, BUT THE REMAINDER OF THE PLANS SHALL GOVERN OVER NOTES HEREON, AND SPECIAL PROVISIONS SHALL GOVERN OVER ALL. SEE SPECIFICATIONS ARTICLE 105-4.

ENGLISH

JANUARY, 1990

STD. NO. SN

REV. 6-16-95 EEM (W) RGW REV. 5-7-03 RWW (W) JTE REV. 10-1-11 MAA (W) GM
REV. 8-16-99 RWW (W) LES REV. 5-1-06 TLA (W) GM

29-FEB-2012 16:25
S:\Share\Structures Standards\Standards English 2012\sn_12.std
emurray

PLAN

HNTB NORTH CAROLINA, P.C.
343 E. Six Forks Road, Suite 200
Raleigh, North Carolina 27609
NC License No: C-1554

PROJECT REFERENCE NO.	SHEET NO.
BD-51030	UBO-1
RW SHEET NO.	

-L-

PI Sta 12+33.52
Δ = 74° 41' 52.9" (LT)
D = 18° 43' 26.8"
L = 398.94'
T = 233.52'
R = 306.00'

PI Sta 18+56.33
Δ = 37° 15' 44.3" (RT)
D = 8° 46' 27.3"
L = 424.68'
T = 220.15'
R = 653.00'

FOUR COUNTY ELECTRIC
P.O. BOX 667
1822 NC HWY 53 WEST
BURGAW, NC 28425
JOE DAIL
(910) 259-1813
JOEDAIL@FOURCTY.ORG

POINT	NORTHING	EASTING	ELEV
117-1	325250.144	2381189.098	17.92'
117-2	325557.638	2381113.744	14.88'
117-3	326022.078	2380861.792	16.54'

DATUM DESCRIPTION

THE LOCALIZED COORDINATE SYSTEM DEVELOPED FOR THIS PROJECT IS BASED ON THE STATE PLANE COORDINATES ESTABLISHED BY NCDOT FOR MONUMENT "117-1"
WITH NAD 83/NSRS 2007 STATE PLANE GRID COORDINATES OF NORTHING: 325250.1440(ft) EASTING: 2381189.098(ft)
ELEVATION: 17.92(ft)
THE AVERAGE COMBINED GRID FACTOR USED ON THIS PROJECT (GROUND TO GRID) IS: 0.999934655
THE N.C. LAMBERT GRID BEARING AND LOCALIZED HORIZONTAL GROUND DISTANCE FROM "117-1" TO -L- STATION 10+00 IS
S 39° 31' 24.76" W 90.8173'
ALL LINEAR DIMENSIONS ARE LOCALIZED HORIZONTAL DISTANCES
VERTICAL DATUM USED IS NAVD 88

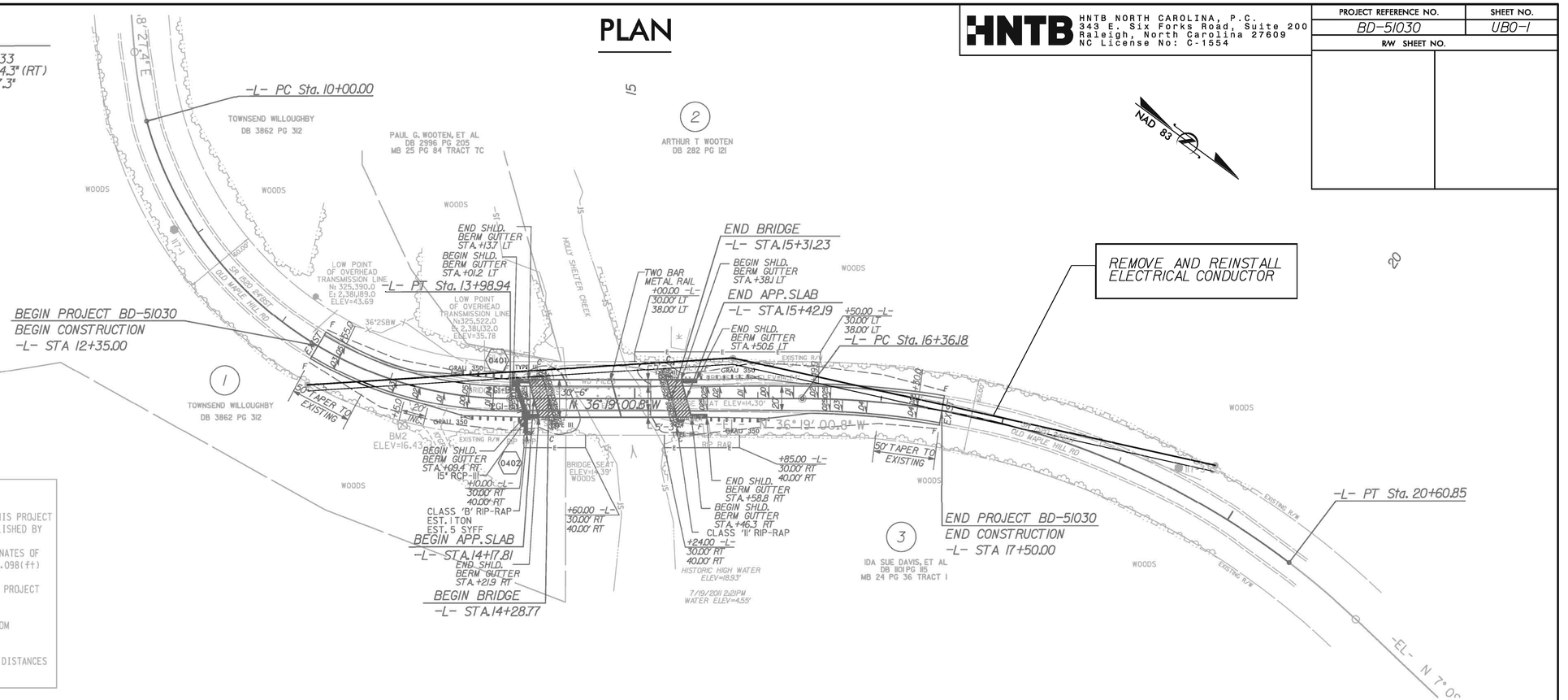

PROFILE

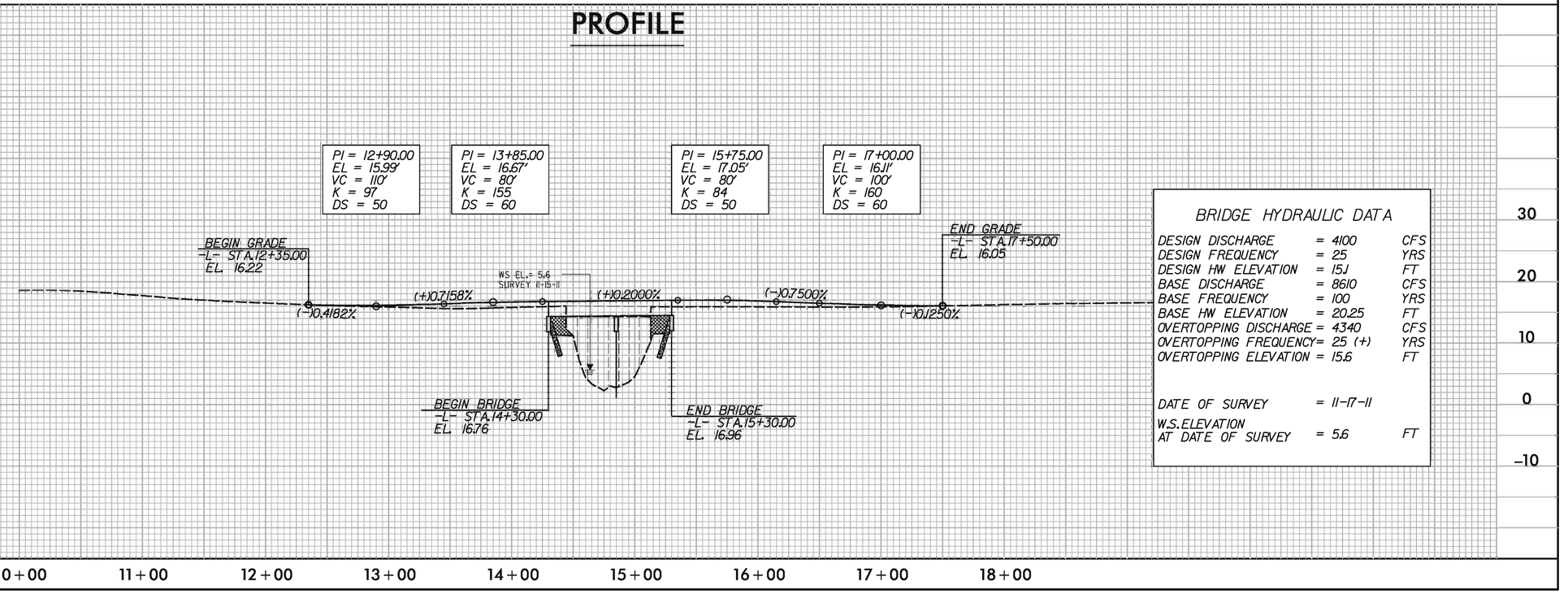

BRIDGE HYDRAULIC DATA

DESIGN DISCHARGE	= 4100	CFS
DESIGN FREQUENCY	= 25	YRS
DESIGN HW ELEVATION	= 15.1	FT
BASE DISCHARGE	= 8610	CFS
BASE FREQUENCY	= 100	YRS
BASE HW ELEVATION	= 20.25	FT
OVERTOPPING DISCHARGE	= 4340	CFS
OVERTOPPING FREQUENCY	= 25 (+)	YRS
OVERTOPPING ELEVATION	= 15.6	FT
DATE OF SURVEY	= 11-17-11	
W.S. ELEVATION AT DATE OF SURVEY	= 5.6	FT

REVISIONS

3/15/2012
5:31:23 PM
...\BD-51030_util_psh_s04.dgn

PLAN

HNTB	HNTB NORTH CAROLINA, P.C. 343 E. Six Forks Road, Suite 200 Raleigh, North Carolina 27609 NC License No: C-1554

PROJECT REFERENCE NO.	SHEET NO.
BD-51030	UB0-2
R/W SHEET NO.	

-L-

PI Sta 12+33.52
△ = 74° 41' 52.9" (LT)
D = 18° 43' 26.8"
L = 398.94'
T = 233.52'
R = 306.00'

PI Sta 18+56.33
△ = 37° 15' 44.3" (RT)
D = 8° 46' 27.3"
L = 424.68'
T = 220.15'
R = 653.00'

AT&T
102 NORTH FORTH STREET
WILMINGTON, NC 28401
SHANNON COSTON
(910) 341-1623
wc1166@ATT.com

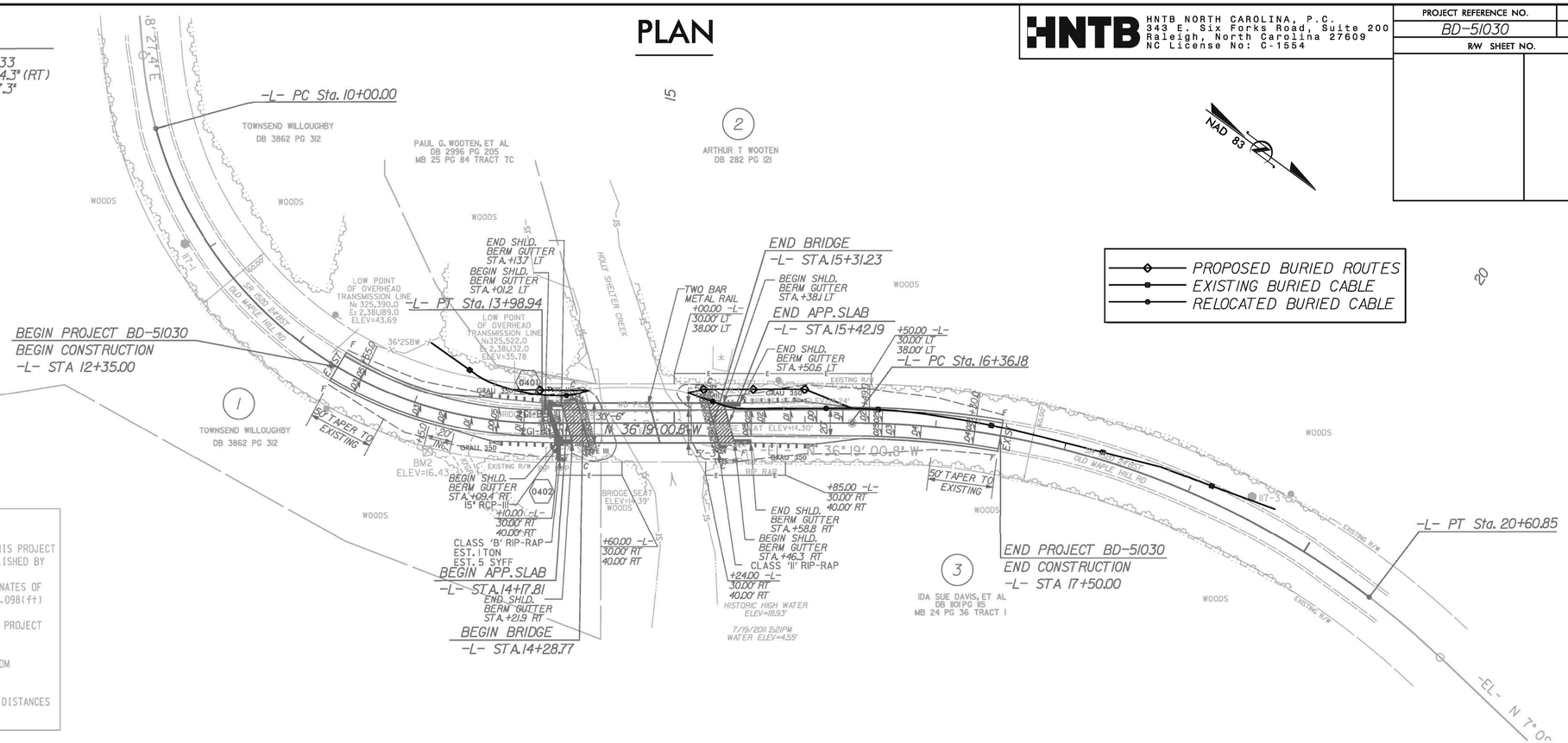

POINT	NORTHING	EASTING	ELEV
II7-1	325250.144	2381189.098	17.92'
II7-2	325557.638	2381113.744	14.88'
II7-3	326022.078	2380861.792	16.54'

DATUM DESCRIPTION

THE LOCALIZED COORDINATE SYSTEM DEVELOPED FOR THIS PROJECT IS BASED ON THE STATE PLANE COORDINATES ESTABLISHED BY NCDOT FOR MONUMENT "117-1"
WITH NAD 83/NSRS 2007 STATE PLANE GRID COORDINATES OF NORTHING: 325250.1440(ft) EASTING: 2381189.098(ft)
ELEVATION: 17.92(ft)
THE AVERAGE COMBINED GRID FACTOR USED ON THIS PROJECT (GROUND TO GRID) IS: 0.999934655
THE N.C. LAMBERT GRID BEARING AND LOCALIZED HORIZONTAL GROUND DISTANCE FROM "117-1" TO -L- STATION 10+00 IS
S 39° 31' 24.76" W 90.8173'
ALL LINEAR DIMENSIONS ARE LOCALIZED HORIZONTAL DISTANCES
VERTICAL DATUM USED IS NAVD 88

PROFILE

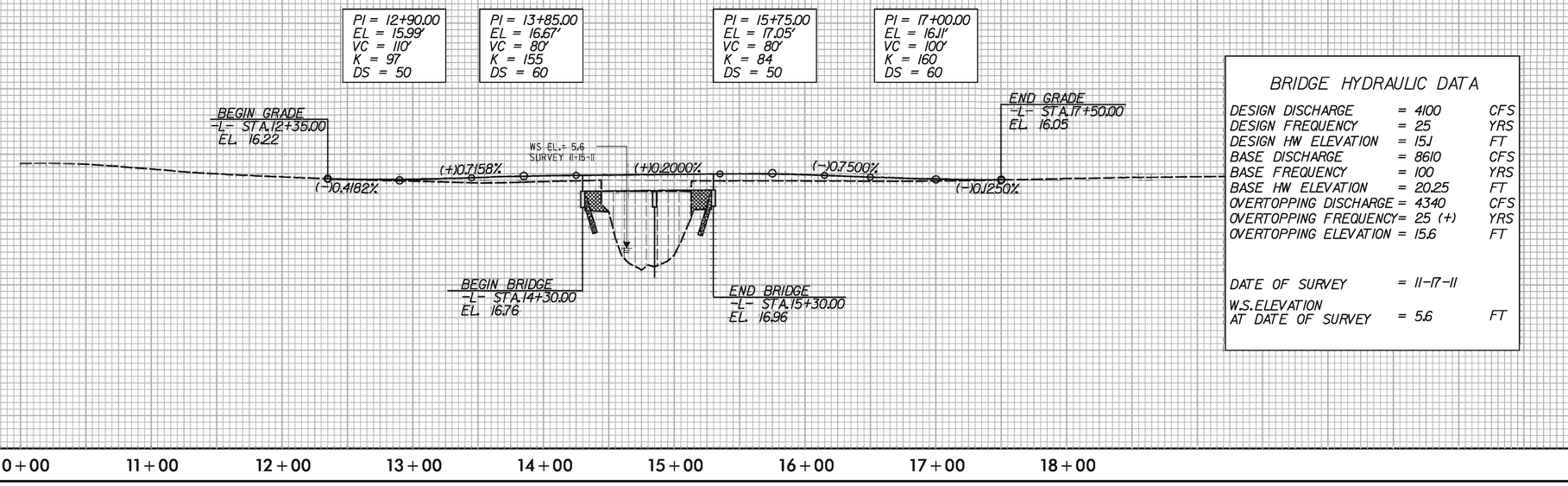

BRIDGE HYDRAULIC DATA

DESIGN DISCHARGE	= 4100	CFS
DESIGN FREQUENCY	= 25	YRS
DESIGN HW ELEVATION	= 15.1	FT
BASE DISCHARGE	= 8610	CFS
BASE FREQUENCY	= 100	YRS
BASE HW ELEVATION	= 20.25	FT
OVERTOPPING DISCHARGE	= 4340	CFS
OVERTOPPING FREQUENCY	= 25 (+)	YRS
OVERTOPPING ELEVATION	= 15.6	FT
DATE OF SURVEY	= 11-17-11	
W.S. ELEVATION AT DATE OF SURVEY	= 5.6	FT

REVISIONS

3/22/2012
9:39:18 AM
...\BD-51030_util_psh_s02.dgn

PLAN

HNTB NORTH CAROLINA, P.C.
343 E. Six Forks Road, Suite 200
Raleigh, North Carolina 27609
NC Licanee No: C-1554

PROJECT REFERENCE NO.	SHEET NO.
BD-51030	4
R/W SHEET NO.	
ROADWAY DESIGN ENGINEER	HYDRAULICS ENGINEER

INCOMPLETE PLANS
DO NOT USE FOR R/W ACQUISITION
PRELIMINARY PLANS
DO NOT USE FOR CONSTRUCTION

REVISIONS

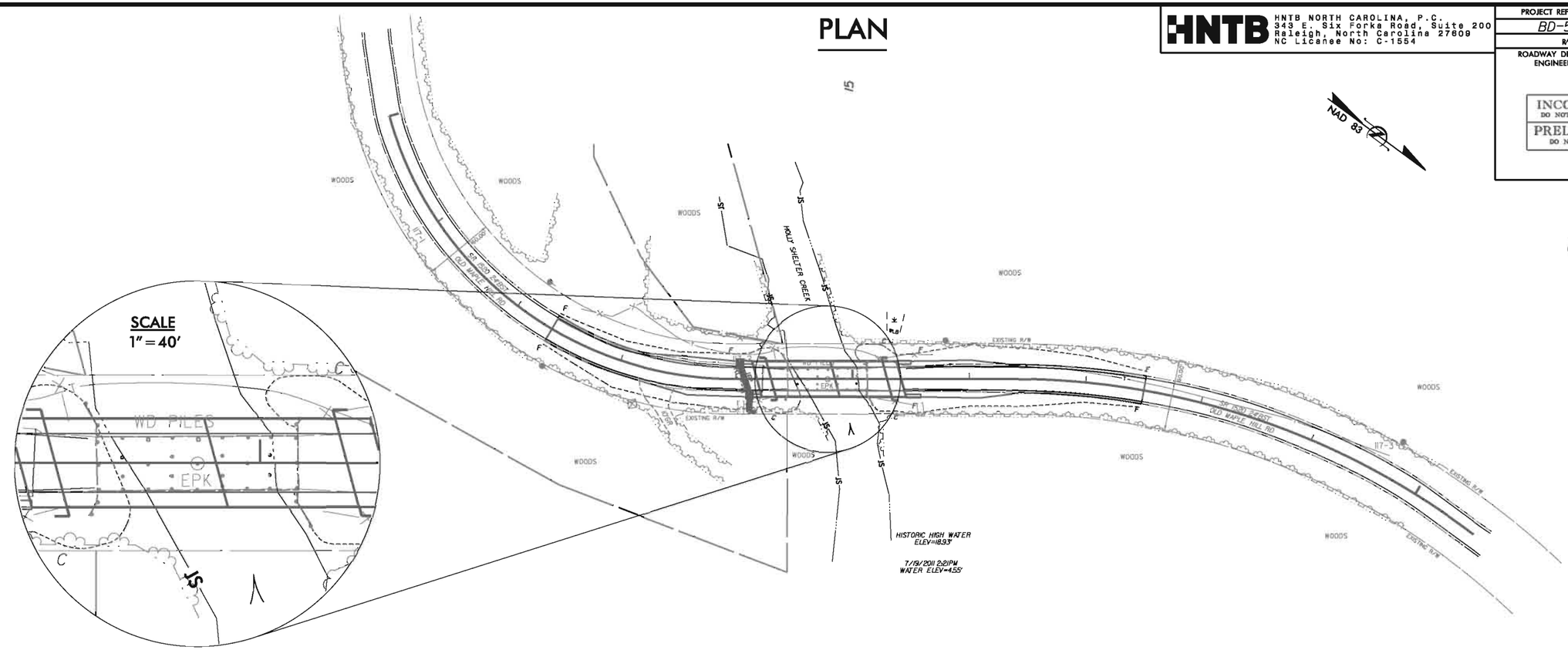

PROFILE

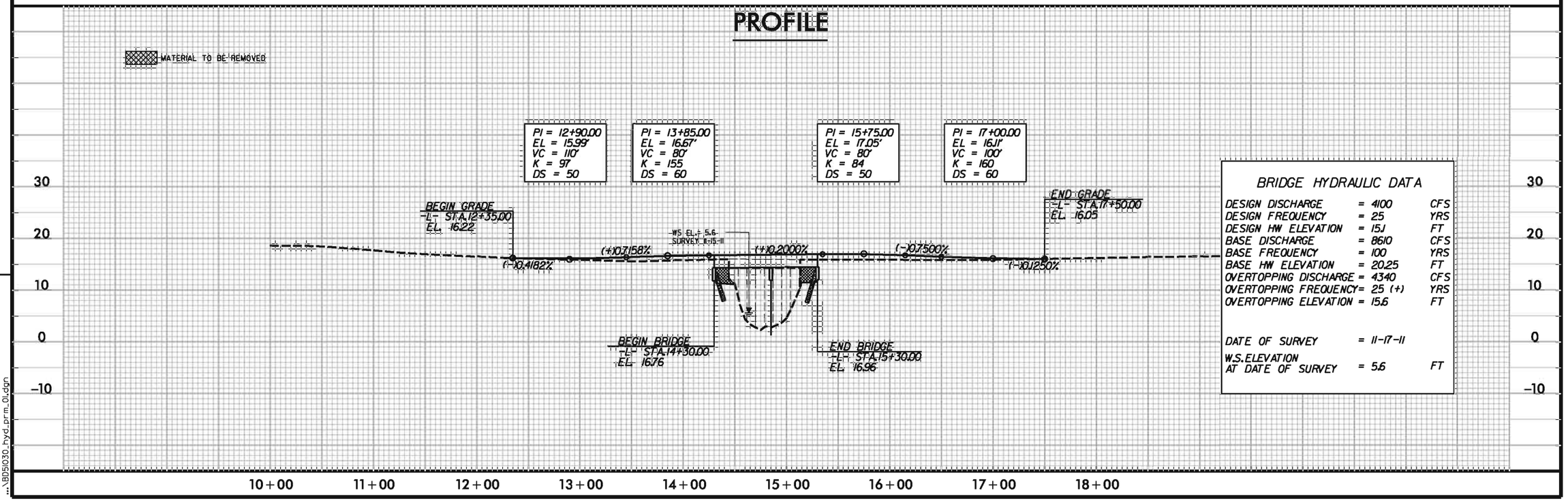

BRIDGE HYDRAULIC DATA

DESIGN DISCHARGE	= 4100	CFS
DESIGN FREQUENCY	= 25	YRS
DESIGN HW ELEVATION	= 15.1	FT
BASE DISCHARGE	= 8610	CFS
BASE FREQUENCY	= 100	YRS
BASE HW ELEVATION	= 20.25	FT
OVERTOPPING DISCHARGE	= 4340	CFS
OVERTOPPING FREQUENCY	= 25 (+)	YRS
OVERTOPPING ELEVATION	= 15.6	FT
DATE OF SURVEY	= 11-17-11	
W.S.ELEVATION AT DATE OF SURVEY	= 5.6	FT

2/6/2012
4:30:30 PM
...\BD51030_hyd_prm_01.dgn

PLAN

HNTB NORTH CAROLINA, P.C.
343 E. Six Forks Road, Suite 200
Raleigh, North Carolina 27609
NC Licanee No: C-1554

PROJECT REFERENCE NO.	SHEET NO.
BD-51030	4
R/W SHEET NO.	
ROADWAY DESIGN ENGINEER	HYDRAULICS ENGINEER

INCOMPLETE PLANS
DO NOT USE FOR R/W ACQUISITION

PRELIMINARY PLANS
DO NOT USE FOR CONSTRUCTION

REVISIONS

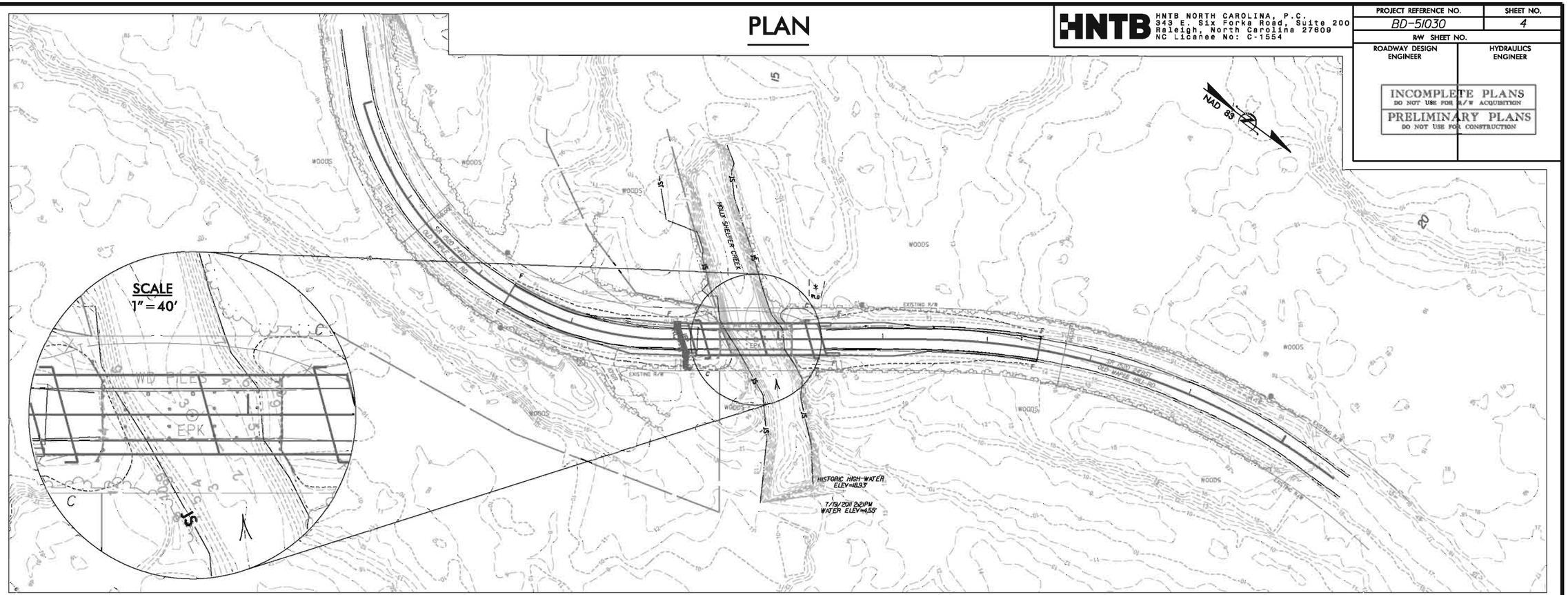

PROFILE

MATERIAL TO BE REMOVED

PI = 12+90.00	PI = 13+85.00	PI = 15+75.00	PI = 17+00.00
EL = 15.99'	EL = 16.67'	EL = 17.05'	EL = 16.11'
VC = 110'	VC = 80'	VC = 80'	VC = 100'
K = 97	K = 155	K = 84	K = 160
DS = 50	DS = 60	DS = 50	DS = 60

BEGIN GRADE
-L- STA.12+35.00
EL. 16.22

(-)0.4182%

(+)0.7158%

WS EL.= 5.6
SURVEY 11-15-11

(+)0.2000%

(-)0.7500%

(-)0.1250%

END GRADE
-L- STA.17+50.00
EL. 16.05

BEGIN BRIDGE
-L- STA.14+30.00
EL. 16.76

END BRIDGE
-L- STA.15+30.00
EL. 16.96

30
20
10
0
-10

10+00 11+00 12+00 13+00 14+00 15+00 16+00 17+00 18+00

BRIDGE HYDRAULIC DATA

DESIGN DISCHARGE	= 4100	CFS
DESIGN FREQUENCY	= 25	YRS
DESIGN HW ELEVATION	= 15.1	FT
BASE DISCHARGE	= 8610	CFS
BASE FREQUENCY	= 100	YRS
BASE HW ELEVATION	= 20.25	FT
OVERTOPPING DISCHARGE	= 4340	CFS
OVERTOPPING FREQUENCY	= 25 (+)	YRS
OVERTOPPING ELEVATION	= 15.6	FT
DATE OF SURVEY	= 11-17-11	
W.S. ELEVATION AT DATE OF SURVEY	= 5.6	FT

2/6/2012
4:36:53 PM
...\BD51030_hyd_prm_02.dgn

STATE	STATE PROJECT REFERENCE NO.	SHEET NO.	TOTAL SHEETS
N.C.	BD-5103O	1	6

STATE OF NORTH CAROLINA
DEPARTMENT OF TRANSPORTATION
DIVISION OF HIGHWAYS
GEOTECHNICAL ENGINEERING UNIT

STRUCTURE SUBSURFACE INVESTIGATION

PROJ. REFERENCE NO. 45349.1.15 (BD-5103O) F.A. PROJ. BRZ-1520(17)

COUNTY PENDER

PROJECT DESCRIPTION BRIDGE NO. 117 ON SR 1520 (OLD MAPLE HILL ROAD) OVER HOLLY SHELTER CREEK AT -L- STA. 14+80

PROJECT: 45349.1.15

ID: BD-5103O

CONTENTS

SHEET	DESCRIPTION
1	TITLE SHEET
2	LEGEND
3	SITE PLAN
4	PROFILES
5-6	BORE LOGS

CAUTION NOTICE

THE SUBSURFACE INFORMATION AND THE SUBSURFACE INVESTIGATION ON WHICH IT IS BASED WERE MADE FOR THE PURPOSE OF STUDY, PLANNING, AND DESIGN AND NOT FOR CONSTRUCTION OR PAY PURPOSES. THE VARIOUS FIELD BORING LOGS, ROCK CORES, AND SOIL TEST DATA AVAILABLE MAY BE REVIEWED OR INSPECTED IN RALEIGH BY CONTACTING THE N. C. DEPARTMENT OF TRANSPORTATION GEOTECHNICAL ENGINEERING UNIT AT (919) 707-6850. NEITHER THE SUBSURFACE PLANS AND REPORTS, NOR THE FIELD BORING LOGS, ROCK CORES, OR SOIL TEST DATA ARE PART OF THE CONTRACT.

GENERAL SOIL AND ROCK STRATA DESCRIPTIONS AND INDICATED BOUNDARIES ARE BASED ON A GEOTECHNICAL INTERPRETATION OF ALL AVAILABLE SUBSURFACE DATA AND MAY NOT NECESSARILY REFLECT THE ACTUAL SUBSURFACE CONDITIONS BETWEEN BORINGS OR BETWEEN SAMPLED STRATA WITHIN THE BOREHOLE. THE LABORATORY SAMPLE DATA AND THE IN SITU (IN-PLACE) TEST DATA CAN BE RELIED ON ONLY TO THE DEGREE OF RELIABILITY INHERENT IN THE STANDARD TEST METHOD. THE OBSERVED WATER LEVELS OR SOIL MOISTURE CONDITIONS INDICATED IN THE SUBSURFACE INVESTIGATIONS ARE AS RECORDED AT THE TIME OF THE INVESTIGATION. THESE WATER LEVELS OR SOIL MOISTURE CONDITIONS MAY VARY CONSIDERABLY WITH TIME ACCORDING TO CLIMATIC CONDITIONS INCLUDING TEMPERATURES, PRECIPITATION, AND WIND, AS WELL AS OTHER NON-CLIMATIC FACTORS.

THE BIDDER OR CONTRACTOR IS CAUTIONED THAT DETAILS SHOWN ON THE SUBSURFACE PLANS ARE PRELIMINARY ONLY AND IN MANY CASES THE FINAL DESIGN DETAILS ARE DIFFERENT. FOR BIDDING AND CONSTRUCTION PURPOSES, REFER TO THE CONSTRUCTION PLANS AND DOCUMENTS FOR FINAL DESIGN INFORMATION ON THIS PROJECT. THE DEPARTMENT DOES NOT WARRANT OR GUARANTEE THE SUFFICIENCY OR ACCURACY OF THE INVESTIGATION MADE, NOR THE INTERPRETATIONS MADE, OR OPINION OF THE DEPARTMENT AS TO THE TYPE OF MATERIALS AND CONDITIONS TO BE ENCOUNTERED. THE BIDDER OR CONTRACTOR IS CAUTIONED TO MAKE SUCH INDEPENDENT SUBSURFACE INVESTIGATIONS AS HE DEEMS NECESSARY TO SATISFY HIMSELF AS TO CONDITIONS TO BE ENCOUNTERED ON THIS PROJECT. THE CONTRACTOR SHALL HAVE NO CLAIM FOR ADDITIONAL COMPENSATION OR FOR AN EXTENSION OF TIME FOR ANY REASON RESULTING FROM THE ACTUAL CONDITIONS ENCOUNTERED AT THE SITE DIFFERING FROM THOSE INDICATED IN THE SUBSURFACE INFORMATION.

PERSONNEL

J.R. SWARTLEY

R.E. SMITH

J.M. EDMONDSON

INVESTIGATED BY D.N. ARGENBRIGHT

CHECKED BY D.N. ARGENBRIGHT

SUBMITTED BY D.N. ARGENBRIGHT

DATE FEBRUARY 2012

NORTH CAROLINA LICENSED SEAL 1050 GEOLOGIST D. N. ARGENBRIGHT

2-15-12

DRAWN BY: C.P. TURNER

NOTE - THE INFORMATION CONTAINED HEREIN IS NOT IMPLIED OR GUARANTEED BY THE N. C. DEPARTMENT OF TRANSPORTATION AS BEING ACCURATE NOR IT IS CONSIDERED TO BE PART OF THE PLANS, SPECIFICATIONS, OR CONTRACT FOR THE PROJECT.

NOTE - BY HAVING REQUESTED THIS INFORMATION THE CONTRACTOR SPECIFICALLY WAIVES ANY CLAIMS FOR INCREASED COMPENSATION OR EXTENSION OF TIME BASED ON DIFFERENCES BETWEEN THE CONDITIONS INDICATED HEREIN AND THE ACTUAL CONDITIONS AT THE PROJECT SITE.

PROJECT REFERENCE NO.	SHEET NO.
BD-51030	2 OF 6

NORTH CAROLINA DEPARTMENT OF TRANSPORTATION
DIVISION OF HIGHWAYS
GEOTECHNICAL ENGINEERING UNIT

SUBSURFACE INVESTIGATION

SOIL AND ROCK LEGEND, TERMS, SYMBOLS, AND ABBREVIATIONS

SOIL DESCRIPTION

SOIL IS CONSIDERED TO BE THE UNCONSOLIDATED, SEMI-CONSOLIDATED, OR WEATHERED EARTH MATERIALS THAT CAN BE PENETRATED WITH A CONTINUOUS FLIGHT POWER AUGER, AND YIELD LESS THAN 100 BLOWS PER FOOT ACCORDING TO STANDARD PENETRATION TEST (AASHTO T206, ASTM D-1586). SOIL CLASSIFICATION IS BASED ON THE AASHTO SYSTEM. BASIC DESCRIPTIONS GENERALLY SHALL INCLUDE: CONSISTENCY, COLOR, TEXTURE, MOISTURE, AASHTO CLASSIFICATION, AND OTHER PERTINENT FACTORS SUCH AS MINERALOGICAL COMPOSITION, ANGULARITY, STRUCTURE, PLASTICITY, ETC. EXAMPLE:

VERY STIFF, GRAY, SILTY CLAY, MOIST WITH INTERBEDDED FINE SAND LAYERS, HIGHLY PLASTIC, A-7-6

SOIL LEGEND AND AASHTO CLASSIFICATION

GENERAL CLASS.	GRANULAR MATERIALS (≤ 35% PASSING #200)							SILT-CLAY MATERIALS (> 35% PASSING #200)				ORGANIC MATERIALS		
GROUP CLASS.	A-1		A-3	A-2				A-4	A-5	A-6	A-7	A-1, A-2 A-3	A-4, A-5 A-6, A-7	
	A-1-a	A-1-b		A-2-4	A-2-5	A-2-6	A-2-7				A-7-5 A-7-6			
SYMBOL														
% PASSING #10	50 MX													
#40	30 MX	50 MX	51 MN											
#200	15 MX	25 MX	10 MX	35 MX	35 MX	35 MX	35 MX	36 MN	36 MN	36 MN	36 MN	GRANULAR SOILS	SILT-CLAY SOILS	MUCK, PEAT
LIQUID LIMIT	6 MX		NP	40 MX	41 MN	40 MX	41 MN	40 MX	41 MN	40 MX	41 MN	SOILS WITH LITTLE OR MODERATE AMOUNTS OF ORGANIC MATTER		HIGHLY ORGANIC SOILS
PLASTIC INDEX				10 MX	10 MX	11 MN	11 MN	10 MX	10 MX	11 MN	11 MN			
GROUP INDEX	0		0	0		4 MX		8 MX	12 MX	16 MX	No MX			
USUAL TYPES OF MAJOR MATERIALS	STONE FRAGS. GRAVEL, AND SAND		FINE SAND	SILTY OR CLAYEY GRAVEL AND SAND				SILTY SOILS		CLAYEY SOILS				
GEN. RATING AS A SUBGRADE	EXCELLENT TO GOOD							FAIR TO POOR				FAIR TO POOR	POOR	UNSUITABLE

PI OF A-7-5 SUBGROUP IS ≤ LL - 30 ; PI OF A-7-6 SUBGROUP IS > LL - 30

CONSISTENCY OR DENSENESS

PRIMARY SOIL TYPE	COMPACTNESS OR CONSISTENCY	RANGE OF STANDARD PENETRATION RESISTENCE (N-VALUE)	RANGE OF UNCONFINED COMPRESSIVE STRENGTH ($TONS/FT^2$)
GENERALLY GRANULAR MATERIAL (NON-COHESIVE)	VERY LOOSE	<4	N/A
	LOOSE	4 TO 10	
	MEDIUM DENSE	10 TO 30	
	DENSE	30 TO 50	
	VERY DENSE	>50	
GENERALLY SILT-CLAY MATERIAL (COHESIVE)	VERY SOFT	<2	<0.25
	SOFT	2 TO 4	0.25 TO 0.50
	MEDIUM STIFF	4 TO 8	0.5 TO 1.0
	STIFF	8 TO 15	1 TO 2
	VERY STIFF	15 TO 30	2 TO 4
	HARD	>30	>4

TEXTURE OR GRAIN SIZE

U.S. STD. SIEVE SIZE	4	10	40	60	200	270
OPENING (MM)	4.76	2.00	0.42	0.25	0.075	0.053

BOULDER (BLDR.)	COBBLE (COB.)	GRAVEL (GR.)	COARSE SAND (CSE. SD.)	FINE SAND (F SD.)	SILT (SL.)	CLAY (CL.)

GRAIN SIZE	MM	305	75	2.0	0.25	0.05	0.005
	IN.	12	3				

SOIL MOISTURE - CORRELATION OF TERMS

SOIL MOISTURE SCALE (ATTERBERG LIMITS)	FIELD MOISTURE DESCRIPTION	GUIDE FOR FIELD MOISTURE DESCRIPTION
	- SATURATED - (SAT.)	USUALLY LIQUID; VERY WET, USUALLY FROM BELOW THE GROUND WATER TABLE
LL — LIQUID LIMIT (PLASTIC RANGE (PI))	- WET - (W)	SEMISOLID; REQUIRES DRYING TO ATTAIN OPTIMUM MOISTURE
PL — PLASTIC LIMIT		
OM — OPTIMUM MOISTURE	- MOIST - (M)	SOLID; AT OR NEAR OPTIMUM MOISTURE
SL — SHRINKAGE LIMIT		
	- DRY - (D)	REQUIRES ADDITIONAL WATER TO ATTAIN OPTIMUM MOISTURE

PLASTICITY

	PLASTICITY INDEX (PI)	DRY STRENGTH
NONPLASTIC	0-5	VERY LOW
LOW PLASTICITY	6-15	SLIGHT
MED. PLASTICITY	16-25	MEDIUM
HIGH PLASTICITY	26 OR MORE	HIGH

COLOR

DESCRIPTIONS MAY INCLUDE COLOR OR COLOR COMBINATIONS (TAN, RED, YELLOW-BROWN, BLUE-GRAY), MODIFIERS SUCH AS LIGHT, DARK, STREAKED, ETC. ARE USED TO DESCRIBE APPEARANCE.

GRADATION

WELL GRADED - INDICATES A GOOD REPRESENTATION OF PARTICLE SIZES FROM FINE TO COARSE.
UNIFORM - INDICATES THAT SOIL PARTICLES ARE ALL APPROXIMATELY THE SAME SIZE. (ALSO POORLY GRADED)
GAP-GRADED - INDICATES A MIXTURE OF UNIFORM PARTICLES OF TWO OR MORE SIZES.

ANGULARITY OF GRAINS

THE ANGULARITY OR ROUNDNESS OF SOIL GRAINS IS DESIGNATED BY THE TERMS: ANGULAR, SUBANGULAR, SUBROUNDED, OR ROUNDED.

MINERALOGICAL COMPOSITION

MINERAL NAMES SUCH AS QUARTZ, FELDSPAR, MICA, TALC, KAOLIN, ETC. ARE USED IN DESCRIPTIONS WHENEVER THEY ARE CONSIDERED OF SIGNIFICANCE.

COMPRESSIBILITY

SLIGHTLY COMPRESSIBLE	LIQUID LIMIT LESS THAN 31
MODERATELY COMPRESSIBLE	LIQUID LIMIT EQUAL TO 31-50
HIGHLY COMPRESSIBLE	LIQUID LIMIT GREATER THAN 50

PERCENTAGE OF MATERIAL

ORGANIC MATERIAL	GRANULAR SOILS	SILT - CLAY SOILS	OTHER MATERIAL	
TRACE OF ORGANIC MATTER	2 - 3%	3 - 5%	TRACE	1 - 10%
LITTLE ORGANIC MATTER	3 - 5%	5 - 12%	LITTLE	10 - 20%
MODERATELY ORGANIC	5 - 10%	12 - 20%	SOME	20 - 35%
HIGHLY ORGANIC	>10%	>20%	HIGHLY	35% AND ABOVE

GROUND WATER

- WATER LEVEL IN BORE HOLE IMMEDIATELY AFTER DRILLING
- STATIC WATER LEVEL AFTER 24 HOURS
- PW — PERCHED WATER, SATURATED ZONE, OR WATER BEARING STRATA
- SPRING OR SEEP

MISCELLANEOUS SYMBOLS

- ROADWAY EMBANKMENT (RE) WITH SOIL DESCRIPTION
- SOIL SYMBOL
- ARTIFICIAL FILL (AF) OTHER THAN ROADWAY EMBANKMENT
- INFERRED SOIL BOUNDARY
- INFERRED ROCK LINE
- ALLUVIAL SOIL BOUNDARY
- 25/025 — DIP & DIP DIRECTION OF ROCK STRUCTURES
- BPT / DPT / DMT / VST / PMT — TEST BORING
- AUGER BORING
- CORE BORING
- MW — MONITORING WELL
- PIEZOMETER INSTALLATION
- SLOPE INDICATOR INSTALLATION
- CONE PENETROMETER TEST
- SOUNDING ROD
- TEST BORING W/ CORE
- SPT N-VALUE
- REF — SPT REFUSAL

ABBREVIATIONS

AR - AUGER REFUSAL
BT - BORING TERMINATED
CL. - CLAY
CPT - CONE PENETRATION TEST
CSE. - COARSE
DMT - DILATOMETER TEST
DPT - DYNAMIC PENETRATION TEST
e - VOID RATIO
F - FINE
FOSS. - FOSSILIFEROUS
FRAC. - FRACTURED, FRACTURES
FRAGS. - FRAGMENTS
HI. - HIGHLY
MED. - MEDIUM
MICA. - MICACEOUS
MOD. - MODERATELY
NP - NON PLASTIC
ORG. - ORGANIC
PMT - PRESSUREMETER TEST
SAP. - SAPROLITIC
SD. - SAND, SANDY
SL. - SILT, SILTY
SLI. - SLIGHTLY
TCR - TRICONE REFUSAL
W - MOISTURE CONTENT
V - VERY
VST - VANE SHEAR TEST
WEA. - WEATHERED
γ - UNIT WEIGHT
γ_d - DRY UNIT WEIGHT

SAMPLE ABBREVIATIONS

S - BULK
SS - SPLIT SPOON
ST - SHELBY TUBE
RS - ROCK
RT - RECOMPACTED TRIAXIAL
CBR - CALIFORNIA BEARING RATIO

EQUIPMENT USED ON SUBJECT PROJECT

DRILL UNITS:
- [ ] MOBILE B-___
- [ ] BK-51
- [X] CME-458
- [ ] CME-550
- [ ] PORTABLE HOIST
- [ ] _____
- [ ] _____

ADVANCING TOOLS:
- [ ] CLAY BITS
- [ ] 6" CONTINUOUS FLIGHT AUGER
- [ ] 8" HOLLOW AUGERS
- [ ] HARD FACED FINGER BITS
- [ ] TUNG.-CARBIDE INSERTS
- [X] CASING [ ] W/ ADVANCER
- [X] TRICONE 2 15/16 " STEEL TEETH
- [ ] TRICONE _____ " TUNG.-CARB.
- [ ] CORE BIT
- [ ] _____

HAMMER TYPE:
- [X] AUTOMATIC [ ] MANUAL

CORE SIZE:
- [ ] -B-____
- [ ] -N-____
- [ ] -N-____

HAND TOOLS:
- [ ] POST HOLE DIGGER
- [ ] HAND AUGER
- [ ] SOUNDING ROD
- [ ] VANE SHEAR TEST
- [ ] _____

ROCK DESCRIPTION

HARD ROCK IS NON-COASTAL PLAIN MATERIAL THAT IF TESTED, WOULD YIELD SPT REFUSAL. AN INFERRED ROCK LINE INDICATES THE LEVEL AT WHICH NON-COASTAL PLAIN MATERIAL WOULD YIELD SPT REFUSAL. SPT REFUSAL IS PENETRATION BY A SPLIT SPOON SAMPLER EQUAL TO OR LESS THAN 0.1 FOOT PER 60 BLOWS. IN NON-COASTAL PLAIN MATERIAL, THE TRANSITION BETWEEN SOIL AND ROCK IS OFTEN REPRESENTED BY A ZONE OF WEATHERED ROCK.
ROCK MATERIALS ARE TYPICALLY DIVIDED AS FOLLOWS:

WEATHERED ROCK (WR)	NON-COASTAL PLAIN MATERIAL THAT WOULD YIELD SPT N VALUES > 100 BLOWS PER FOOT IF TESTED.
CRYSTALLINE ROCK (CR)	FINE TO COARSE GRAIN IGNEOUS AND METAMORPHIC ROCK THAT WOULD YIELD SPT REFUSAL IF TESTED. ROCK TYPE INCLUDES GRANITE, GNEISS, GABBRO, SCHIST, ETC.
NON-CRYSTALLINE ROCK (NCR)	FINE TO COARSE GRAIN METAMORPHIC AND NON-COASTAL PLAIN SEDIMENTARY ROCK THAT WOULD YEILD SPT REFUSAL IF TESTED. ROCK TYPE INCLUDES PHYLLITE, SLATE, SANDSTONE, ETC.
COASTAL PLAIN SEDIMENTARY ROCK (CP)	COASTAL PLAIN SEDIMENTS CEMENTED INTO ROCK, BUT MAY NOT YIELD SPT REFUSAL. ROCK TYPE INCLUDES LIMESTONE, SANDSTONE, CEMENTED SHELL BEDS, ETC.

WEATHERING

FRESH	ROCK FRESH, CRYSTALS BRIGHT, FEW JOINTS MAY SHOW SLIGHT STAINING. ROCK RINGS UNDER HAMMER IF CRYSTALLINE.
VERY SLIGHT (V SLI.)	ROCK GENERALLY FRESH, JOINTS STAINED, SOME JOINTS MAY SHOW THIN CLAY COATINGS IF OPEN, CRYSTALS ON A BROKEN SPECIMEN FACE SHINE BRIGHTLY. ROCK RINGS UNDER HAMMER BLOWS IF OF A CRYSTALLINE NATURE.
SLIGHT (SLI.)	ROCK GENERALLY FRESH, JOINTS STAINED AND DISCOLORATION EXTENDS INTO ROCK UP TO 1 INCH. OPEN JOINTS MAY CONTAIN CLAY. IN GRANITOID ROCKS SOME OCCASIONAL FELDSPAR CRYSTALS ARE DULL AND DISCOLORED, CRYSTALLINE ROCKS RING UNDER HAMMER BLOWS.
MODERATE (MOD.)	SIGNIFICANT PORTIONS OF ROCK SHOW DISCOLORATION AND WEATHERING EFFECTS. IN GRANITOID ROCKS, MOST FELDSPARS ARE DULL AND DISCOLORED, SOME SHOW CLAY. ROCK HAS DULL SOUND UNDER HAMMER BLOWS AND SHOWS SIGNIFICANT LOSS OF STRENGTH AS COMPARED WITH FRESH ROCK.
MODERATELY SEVERE (MOD. SEV.)	ALL ROCK EXCEPT QUARTZ DISCOLORED OR STAINED. IN GRANITOID ROCKS, ALL FELDSPARS DULL AND DISCOLORED AND A MAJORITY SHOW KAOLINIZATION. ROCK SHOWS SEVERE LOSS OF STRENGTH AND CAN BE EXCAVATED WITH A GEOLOGIST'S PICK. ROCK GIVES "CLUNK" SOUND WHEN STRUCK. *IF TESTED, WOULD YIELD SPT REFUSAL*
SEVERE (SEV.)	ALL ROCK EXCEPT QUARTZ DISCOLORED OR STAINED. ROCK FABRIC CLEAR AND EVIDENT BUT REDUCED IN STRENGTH TO STRONG SOIL. IN GRANITOID ROCKS ALL FELDSPARS ARE KAOLINIZED TO SOME EXTENT. SOME FRAGMENTS OF STRONG ROCK USUALLY REMAIN. *IF TESTED, YIELDS SPT N VALUES > 100 BPF*
VERY SEVERE (V SEV.)	ALL ROCK EXCEPT QUARTZ DISCOLORED OR STAINED. ROCK FABRIC ELEMENTS ARE DISCERNIBLE BUT THE MASS IS EFFECTIVELY REDUCED TO SOIL STATUS, WITH ONLY FRAGMENTS OF STRONG ROCK REMAINING. SAPROLITE IS AN EXAMPLE OF ROCK WEATHERED TO A DEGREE SUCH THAT ONLY MINOR VESTIGES OF THE ORIGINAL ROCK FABRIC REMAIN. *IF TESTED, YIELDS SPT N VALUES < 100 BPF*
COMPLETE	ROCK REDUCED TO SOIL. ROCK FABRIC NOT DISCERNIBLE, OR DISCERNIBLE ONLY IN SMALL AND SCATTERED CONCENTRATIONS. QUARTZ MAY BE PRESENT AS DIKES OR STRINGERS. SAPROLITE IS ALSO AN EXAMPLE.

ROCK HARDNESS

VERY HARD	CANNOT BE SCRATCHED BY KNIFE OR SHARP PICK. BREAKING OF HAND SPECIMENS REQUIRES SEVERAL HARD BLOWS OF THE GEOLOGIST'S PICK.
HARD	CAN BE SCRATCHED BY KNIFE OR PICK ONLY WITH DIFFICULTY. HARD HAMMER BLOWS REQUIRED TO DETACH HAND SPECIMEN.
MODERATELY HARD	CAN BE SCRATCHED BY KNIFE OR PICK. GOUGES OR GROOVES TO 0.25 INCHES DEEP CAN BE EXCAVATED BY HARD BLOW OF A GEOLOGIST'S PICK. HAND SPECIMENS CAN BE DETACHED BY MODERATE BLOWS.
MEDIUM HARD	CAN BE GROOVED OR GOUGED 0.05 INCHES DEEP BY FIRM PRESSURE OF KNIFE OR PICK POINT. CAN BE EXCAVATED IN SMALL CHIPS TO PEICES 1 INCH MAXIMUM SIZE BY HARD BLOWS OF THE POINT OF A GEOLOGIST'S PICK.
SOFT	CAN BE GROVED OR GOUGED READILY BY KNIFE OR PICK. CAN BE EXCAVATED IN FRAGMENTS FROM CHIPS TO SEVERAL INCHES IN SIZE BY MODERATE BLOWS OF A PICK POINT. SMALL, THIN PIECES CAN BE BROKEN BY FINGER PRESSURE.
VERY SOFT	CAN BE CARVED WITH KNIFE. CAN BE EXCAVATED READILY WITH POINT OF PICK. PIECES 1 INCH OR MORE IN THICKNESS CAN BE BROKEN BY FINGER PRESSURE. CAN BE SCRATCHED READILY BY FINGERNAIL.

FRACTURE SPACING

TERM	SPACING
VERY WIDE	MORE THAN 10 FEET
WIDE	3 TO 10 FEET
MODERATELY CLOSE	1 TO 3 FEET
CLOSE	0.16 TO 1 FEET
VERY CLOSE	LESS THAN 0.16 FEET

BEDDING

TERM	THICKNESS
VERY THICKLY BEDDED	> 4 FEET
THICKLY BEDDED	1.5 - 4 FEET
THINLY BEDDED	0.16 - 1.5 FEET
VERY THINLY BEDDED	0.03 - 0.16 FEET
THICKLY LAMINATED	0.008 - 0.03 FEET
THINLY LAMINATED	< 0.008 FEET

INDURATION

FOR SEDIMENTARY ROCKS, INDURATION IS THE HARDENING OF THE MATERIAL BY CEMENTING, HEAT, PRESSURE, ETC.

FRIABLE	RUBBING WITH FINGER FREES NUMEROUS GRAINS; GENTLE BLOW BY HAMMER DISINTEGRATES SAMPLE.
MODERATELY INDURATED	GRAINS CAN BE SEPARATED FROM SAMPLE WITH STEEL PROBE; BREAKS EASILY WHEN HIT WITH HAMMER.
INDURATED	GRAINS ARE DIFFICULT TO SEPARATE WITH STEEL PROBE; DIFFICULT TO BREAK WITH HAMMER.
EXTREMELY INDURATED	SHARP HAMMER BLOWS REQUIRED TO BREAK SAMPLE; SAMPLE BREAKS ACROSS GRAINS.

TERMS AND DEFINITIONS

ALLUVIUM (ALLUV.) - SOILS THAT HAVE BEEN TRANSPORTED BY WATER.

AQUIFER - A WATER BEARING FORMATION OR STRATA.

ARENACEOUS - APPLIED TO ROCKS THAT HAVE BEEN DERIVED FROM SAND OR THAT CONTAIN SAND.

ARGILLACEOUS - APPLIED TO ALL ROCKS OR SUBSTANCES COMPOSED OF CLAY MINERALS, OR HAVING A NOTABLE PROPORTION OF CLAY IN THEIR COMPOSITION, AS SHALE, SLATE, ETC.

ARTESIAN - GROUND WATER THAT IS UNDER SUFFICIENT PRESSURE TO RISE ABOVE THE LEVEL AT WHICH IT IS ENCOUNTERED, BUT WHICH DOES NOT NECESSARILY RISE TO OR ABOVE THE GROUND SURFACE.

CALCAREOUS (CALC.) - SOILS THAT CONTAIN APPRECIABLE AMOUNTS OF CALCIUM CARBONATE.

COLLUVIUM - ROCK FRAGMENTS MIXED WITH SOIL DEPOSITED BY GRAVITY ON SLOPE OR AT BOTTOM OF SLOPE.

CORE RECOVERY (REC.) - TOTAL LENGTH OF ALL MATERIAL RECOVERED IN THE CORE BARREL DIVIDED BY TOTAL LENGTH OF CORE RUN AND EXPRESSED AS A PERCENTAGE.

DIKE - A TABULAR BODY OF IGNEOUS ROCK THAT CUTS ACROSS THE STRUCTURE OF ADJACENT ROCKS OR CUTS MASSIVE ROCK.

DIP - THE ANGLE AT WHICH A STRATUM OR ANY PLANAR FEATURE IS INCLINED FROM THE HORIZONTAL.

DIP DIRECTION (DIP AZIMUTH) - THE DIRECTION OR BEARING OF THE HORIZONTAL TRACE OF THE LINE OF DIP, MEASURED CLOCKWISE FROM NORTH.

FAULT - A FRACTURE OR FRACTURE ZONE ALONG WHICH THERE HAS BEEN DISPLACEMENT OF THE SIDES RELATIVE TO ONE ANOTHER PARALLEL TO THE FRACTURE.

FISSILE - A PROPERTY OF SPLITTING ALONG CLOSELY SPACED PARALLEL PLANES.

FLOAT - ROCK FRAGMENTS ON SURFACE NEAR THEIR ORIGINAL POSITION AND DISLODGED FROM PARENT MATERIAL.

FLOOD PLAIN (FP) - LAND BORDERING A STREAM, BUILT OF SEDIMENTS DEPOSITED BY THE STREAM.

FORMATION (FM.) - A MAPPABLE GEOLOGIC UNIT THAT CAN BE RECOGNIZED AND TRACED IN THE FIELD.

JOINT - FRACTURE IN ROCK ALONG WHICH NO APPRECIABLE MOVEMENT HAS OCCURRED.

LEDGE - A SHELF-LIKE RIDGE OR PROJECTION OF ROCK WHOSE THICKNESS IS SMALL COMPARED TO ITS LATERAL EXTENT.

LENS - A BODY OF SOIL OR ROCK THAT THINS OUT IN ONE OR MORE DIRECTIONS.

MOTTLED (MOT.) - IRREGULARLY MARKED WITH SPOTS OF DIFFERENT COLORS. MOTTLING IN SOILS USUALLY INDICATES POOR AERATION AND LACK OF GOOD DRAINAGE.

PERCHED WATER - WATER MAINTAINED ABOVE THE NORMAL GROUND WATER LEVEL BY THE PRESENCE OF AN INTERVENING IMPERVIOUS STRATUM.

RESIDUAL (RES.) SOIL - SOIL FORMED IN PLACE BY THE WEATHERING OF ROCK.

ROCK QUALITY DESIGNATION (RQD) - A MEASURE OF ROCK QUALITY DESCRIBED BY TOTAL LENGTH OF ROCK SEGMENTS EQUAL TO OR GREATER THAN 4 INCHES DIVIDED BY THE TOTAL LENGTH OF CORE RUN AND EXPRESSED AS A PERCENTAGE.

SAPROLITE (SAP.) - RESIDUAL SOIL THAT RETAINS THE RELIC STRUCTURE OR FABRIC OF THE PARENT ROCK.

SILL - AN INTRUSIVE BODY OF IGNEOUS ROCK OF APPROXIMATELY UNIFORM THICKNESS AND RELATIVELY THIN COMPARED WITH ITS LATERAL EXTENT, THAT HAS BEEN EMPLACED PARALLEL TO THE BEDDING OR SCHISTOSITY OF THE INTRUDED ROCKS.

SLICKENSIDE - POLISHED AND STRIATED SURFACE THAT RESULTS FROM FRICTION ALONG A FAULT OR SLIP PLANE.

STANDARD PENETRATION TEST (PENETRATION RESISTANCE) (SPT) - NUMBER OF BLOWS (N OR BPF) OF A 140 LB. HAMMER FALLING 30 INCHES REQUIRED TO PRODUCE A PENETRATION OF 1 FOOT INTO SOIL WITH A 2 INCH OUTSIDE DIAMETER SPLIT SPOON SAMPLER. SPT REFUSAL IS PENETRATION EQUAL TO OR LESS THAN 0.1 FOOT PER 60 BLOWS.

STRATA CORE RECOVERY (SREC.) - TOTAL LENGTH OF STRATA MATERIAL RECOVERED DIVIDED BY TOTAL LENGTH OF STRATUM AND EXPRESSED AS A PERCENTAGE.

STRATA ROCK QUALITY DESIGNATION (SRQD) - A MEASURE OF ROCK QUALITY DESCRIBED BY TOTAL LENGTH OF ROCK SEGMENTS WITHIN A STRATUM EQUAL TO OR GREATER THAN 4 INCHES DIVIDED BY THE TOTAL LENGTH OF STRATA AND EXPRESSED AS A PERCENTAGE.

TOPSOIL (TS.) - SURFACE SOILS USUALLY CONTAINING ORGANIC MATTER.

BENCH MARK: BASELINE CAP -BL- 1 AT -BL- STA. 10+87.76

ELEVATION: 17.92 FT.

NOTES:

REVISED 09/23/09

PROJECT REFERENCE NO.	SHEET
BD-5103O	3 OF 6

SITE PLAN

0 30 60

FEET

SKEW = 75°

N

13

15

WOODS

HOLLY SHELTER CREEK

F

TO SR 1522

C

EXISTING BRIDGE NO. 117

-L-

SR 1520 (OLD MAPLE HILL RD.)

TO NC HWY 50

WLB

EB1-B

EB2-B

10'GR

WOODS

WOODS

WOODS

EB1 BENT LINE

B1 BENT LINE

EB2 BENT LINE

5/14/99

PROJECT REFERENCE NO.	SHEET NO.
BD-51030	4 OF 6
ROADWAY DESIGN ENGINEER	HYDRAULICS ENGINEER

INCOMPLETE PLANS
DO NOT USE FOR R/W ACQUISITION

PRELIMINARY PLANS
DO NOT USE FOR CONSTRUCTION

PROFILE THROUGH BORINGS PROJECTED ALONG -L-

VE = 2.0

EB1-B
14+34
5' RT

EB2-B
15+33
6' RT

WATER SURFACE 11/11

02/12

02/12

VERY LOOSE TO MEDIUM DENSE BROWN TAN SAND WITH WOOD, MOIST TO SATURATED (ALLUVIAL)

LOOSE TO MEDIUM DENSE GRAY CALCAREOUS SAND WITH SHELL FRAGMENTS, SATURATED (CASTLE HAYNE FORMATION)

MEDIUM DENSE TO VERY DENSE GRAY GREEN SAND, SATURATED (PEEDEE FORMATION)

LOOSE TO VERY DENSE GRAY GREEN CLAYEY SAND, SATURATED (PEEDEE FORMATION)

DENSE TO VERY DENSE GRAY GREEN SAND, SATURATED (PEEDEE FORMATION)

Ⓐ ASPHALT PAVEMENT

Ⓑ VERY LOOSE TO MEDIUM DENSE TAN SAND, MOIST TO SATURATED (ROADWAY EMBANKMENT

Ⓒ SOFT TO VERY HARD GRAY SANDY LIMESTONE (PEEDEE FORMATION)

NOTE: GROUNDLINE PROFILE ALONG -L- TAKEN FROM BRIDGE SURVEY AND HYDRAULIC DESIGN REPORT DATED 1/9/2012.

NOTE: INFERRED STRATIGRAPHY IS DRAWN THROUGH THE BORINGS WITH BOTH PROJECTED ONTO PROFILE.

15-FEB-2012 07:17
L:\ERO\Greenville\Investigation\TIP\BD51030_GEO_BRD06117_PENDER\CADD_GEOTECH\Strata&Sub\BD51030_hyd_BSR.dgn

NCDOT GEOTECHNICAL ENGINEERING UNIT
BORELOG REPORT

WBS 45349.1.15	TIP BD-5103O	COUNTY PENDER	GEOLOGIST Swartley, J. R.	
SITE DESCRIPTION BRIDGE NO. 117 ON -L- (SR 1520) OVER HOLLY SHELTER CREEK				GROUND WTR (ft)
BORING NO. EB1-B	STATION 14+34	OFFSET 5 ft RT	ALIGNMENT -L-	0 HR. N/A
COLLAR ELEV. 16.1 ft	TOTAL DEPTH 84.8 ft	NORTHING 325,583	EASTING 2,381,121	24 HR. 8.5
DRILL RIG/HAMMER EFF./DATE GFO0062 CME-45B 96% 6/27/2011		DRILL METHOD Mud Rotary		HAMMER TYPE Automatic
DRILLER Smith, R. E.	START DATE 02/09/12	COMP. DATE 02/09/12	SURFACE WATER DEPTH N/A	

ELEV (ft)	DRIVE ELEV (ft)	DEPTH (ft)	BLOW COUNT 0.5ft	0.5ft	0.5ft	BLOWS PER FOOT 0 25 50 75 100	SAMP. NO.	MOI	LOG	SOIL AND ROCK DESCRIPTION ELEV. (ft) DEPTH (ft)
20										
15	15.2	0.9	7	8	7	15				16.1 GROUND SURFACE 0.0 15.2 ASPHALT PAVEMENT 0.9 ROADWAY EMBANKMENT TAN SAND, MOIST
10	12.1	4.0	1	1	1	2				11.6 4.5 ALLUVIAL BROWN TAN SAND, MOIST TO SAT.
5	7.8	8.3	4	3	5	8				
0	2.8	13.3	8	9	11	20				
-5	-2.2	18.3	8	8	9	17				-1.9 18.0 COASTAL PLAIN GRAY CALCAREOUS SAND WITH SHELL FRAGMENTS, SAT. (CASTLE HAYNE FORMATION)
-10	-7.2	23.3	7	8	8	16				
-15	-12.2	28.3	4	4	4	8				
-20	-17.2	33.3	5	4	5	9				
-25	-22.2	38.3	6	6	6	12				
-30	-27.2	43.3	5	5	5	10				-29.9 46.0 COASTAL PLAIN GRAY GREEN SAND, SAT. (PEEDEE FORMATION)
-35	-32.2	48.3	11	18	35	53				-35.4 51.5 GRAY SANDY LIMESTONE 52.2 COASTAL PLAIN GRAY GREEN CLAYEY SAND, SAT
-40	-37.2	53.3	8	5	5	10				
-45	-42.2	58.3	4	3	4	7				
-50	-47.2	63.3	10	11	13	24				-49.9 66.0 COASTAL PLAIN GRAY GREEN SAND WITH THIN LIMESTONE LAYERS, SAT. (PEEDEE FORMATION)
-55	-52.2	68.3	12	22	43	65				
-60	-57.2	73.3	100/0.5			100/0.5				-56.9 73.0 GRAY SANDY LIMESTONE -58.9 75.0

NCDOT BORE DOUBLE BD5103O.GPJ NC_DOT.GDT 2/14/12

WBS 45349.1.15	TIP BD-5103O	COUNTY PENDER	GEOLOGIST Swartley, J. R.	
SITE DESCRIPTION BRIDGE NO. 117 ON -L- (SR 1520) OVER HOLLY SHELTER CREEK				GROUND WTR (ft)
BORING NO. EB1-B	STATION 14+34	OFFSET 5 ft RT	ALIGNMENT -L-	0 HR. N/A
COLLAR ELEV. 16.1 ft	TOTAL DEPTH 84.8 ft	NORTHING 325,583	EASTING 2,381,121	24 HR. 8.5
DRILL RIG/HAMMER EFF./DATE GFO0062 CME-45B 96% 6/27/2011		DRILL METHOD Mud Rotary		HAMMER TYPE Automatic
DRILLER Smith, R. E.	START DATE 02/09/12	COMP. DATE 02/09/12	SURFACE WATER DEPTH N/A	

ELEV (ft)	DRIVE ELEV (ft)	DEPTH (ft)	BLOW COUNT 0.5ft	0.5ft	0.5ft	BLOWS PER FOOT 0 25 50 75 100	SAMP. NO.	MOI	LOG	SOIL AND ROCK DESCRIPTION
-60						Match Line				
-65	-62.2	78.3	18	32	33	65				COASTAL PLAIN GRAY GREEN SAND, SAT. (PEEDEE FORMATION)*(continued)*
	-67.2	83.3	19	21	22	43				-68.7 84.8 Boring Terminated at Elevation -68.7 ft in dense sand

NCDOT GEOTECHNICAL ENGINEERING UNIT
BORELOG REPORT

WBS 45349.1.15	TIP BD-5103O	COUNTY PENDER	GEOLOGIST Swartley, J. R.	
SITE DESCRIPTION BRIDGE NO. 117 ON -L- (SR 1520) OVER HOLLY SHELTER CREEK				GROUND WTR (ft)
BORING NO. EB2-B	STATION 15+33	OFFSET 6 ft RT	ALIGNMENT -L-	0 HR. N/A
COLLAR ELEV. 15.8 ft	TOTAL DEPTH 73.8 ft	NORTHING 325,663	EASTING 2,381,063	24 HR. 7.0
DRILL RIG/HAMMER EFF./DATE GFO0062 CME-45B 96% 6/27/2011		DRILL METHOD Mud Rotary		HAMMER TYPE Automatic
DRILLER Smith, R. E.	START DATE 02/09/12	COMP. DATE 02/09/12	SURFACE WATER DEPTH N/A	

ELEV (ft)	DRIVE ELEV (ft)	DEPTH (ft)	BLOW COUNT 0.5ft	0.5ft	0.5ft	BLOWS PER FOOT 0 25 50 75 100	SAMP. NO.	MOI	LOG	SOIL AND ROCK DESCRIPTION ELEV. (ft)	DEPTH (ft)
										15.8 GROUND SURFACE	0.0
	14.9	0.9								14.9 ASPHALT PAVEMENT	0.9
			5	8	7	15				ROADWAY EMBANKMENT TAN SAND, MOIST	
	11.8	4.0									
			2	1	1	2				10.3	5.5
	7.5	8.3								ALLUVIAL BROWN TAN SAND WITH WOOD, MOIST TO SAT.	
			3	2	3	5					
	2.5	13.3									
			1	2	2	4					
	-2.5	18.3								-2.2	18.0
			8	7	7	14				COASTAL PLAIN GRAY CALCAREOUS SAND WITH SHELL FRAGMENTS, SAT. (CASTLE HAYNE FORMATION)	
	-7.5	23.3									
			6	5	7	12					
	-12.5	28.3								-10.2	26.0
			4	3	4	7					
	-17.5	33.3									
			3	4	4	8					
	-22.5	38.3									
			7	5	5	10					
	-27.5	43.3									
			6	5	5	10					
	-32.5	48.3								-30.2	46.0
			8	12	11	23				COASTAL PLAIN GRAY GREEN SAND, SAT. (PEEDEE FORMATION)	
	-37.1	52.9	60/0.1			60/0.1				-37.1 GRAY SANDY LIMESTONE	52.9
										-38.7 COASTAL PLAIN GRAY GREEN CLAYEY SAND, SAT.	54.5
	-42.5	58.3									
			4	3	4	7					
	-47.5	63.3								-45.2	61.0
			4	5	6	11				COASTAL PLAIN GRAY GREEN SAND, SAT.	
	-52.5	68.3									
			9	13	14	27					
	-57.5	73.3								-57.2	73.0
			100/0.5			100/0.5				-58.0 GRAY SANDY LIMESTONE	73.8
										Boring Terminated at Elevation -58.0 ft in	

WBS 45349.1.15	TIP BD-5103O	COUNTY PENDER	GEOLOGIST Swartley, J. R.	
SITE DESCRIPTION BRIDGE NO. 117 ON -L- (SR 1520) OVER HOLLY SHELTER CREEK				GROUND WTR (ft)
BORING NO. EB2-B	STATION 15+33	OFFSET 6 ft RT	ALIGNMENT -L-	0 HR. N/A
COLLAR ELEV. 15.8 ft	TOTAL DEPTH 73.8 ft	NORTHING 325,663	EASTING 2,381,063	24 HR. 7.0
DRILL RIG/HAMMER EFF./DATE GFO0062 CME-45B 96% 6/27/2011		DRILL METHOD Mud Rotary		HAMMER TYPE Automatic
DRILLER Smith, R. E.	START DATE 02/09/12	COMP. DATE 02/09/12	SURFACE WATER DEPTH N/A	

ELEV (ft)	DRIVE ELEV (ft)	DEPTH (ft)	BLOW COUNT 0.5ft	0.5ft	0.5ft	BLOWS PER FOOT 0 25 50 75 100	SAMP. NO.	MOI	LOG	SOIL AND ROCK DESCRIPTION
-60						Match Line				soft limestone

NCDOT BORE DOUBLE BD5103O.GPJ NC_DOT.GDT 2/14/12