PROJECT REFERENCE NO.	SHEET NO.
SR-5001CB	2

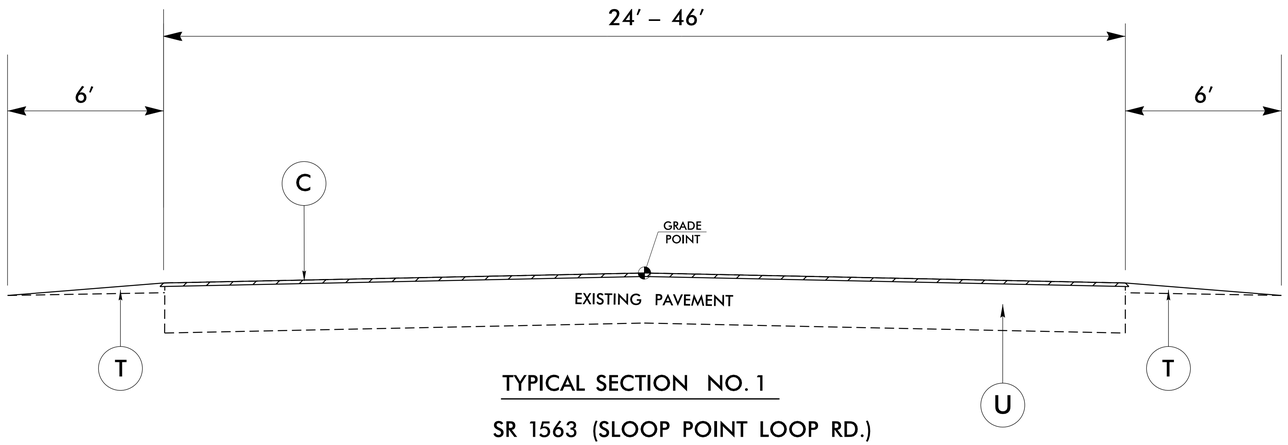

TYPICAL SECTION NO. 1

SR 1563 (SLOOP POINT LOOP RD.)
US 17 AT MP 0.015 TO MP 0.820
–L– STA. 10+00.00 TO 13+08.00
–L– STA. 31+03.00 TO 31+58.64
MP 1.365 TO SR 1694 (MASTERS LN.) AT MP 1.888

NORTH CAROLINA PROFESSIONAL SEAL 037439 ENGINEER DAVID B. LEONARD

4/25/2017 | 11:08 AM PDT

DIVISION DESIGN ENGINEER

PAVEMENT SCHEDULE	
C	PROP. APPROX. 1 1/2″ ASPHALT CONCRETE SURFACE COURSE, TYPE S9.5B, AT AN AVERAGE RATE OF 168 LBS. PER SQ. YD.
C1	PROP. APPROX. 1 1/2″ ASPHALT CONCRETE SURFACE COURSE, TYPE SF9.5A, AT AN AVERAGE RATE OF 165 LBS. PER SQ. YD.
D	PROP. APPROX. 4.0″ ASPHALT CONCRETE INTERMEDIATE COURSE, TYPE I19.0B, AT AN AVERAGE RATE OF 456 LBS. PER SQ. YD.
E	PROP. APPROX. 4.0″ ASPHALT CONCRETE BASE COURSE, TYPE B25.0B, AT AN AVERAGE RATE OF 456 LBS. PER SQ. YD.
J	PROP. 6″ AGGREGATE BASE COURSE
R	PROPOSED CONCRETE 2′-6″ CURB & GUTTER
T	EARTH MATERIAL
U	EXISTING PAVEMENT

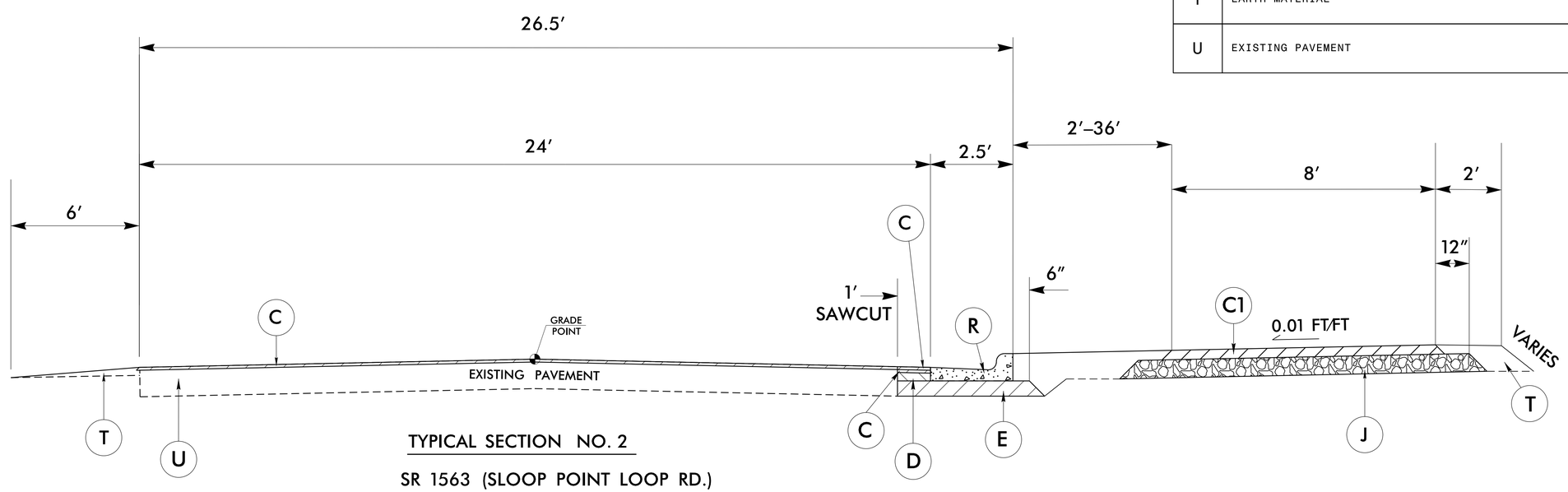

TYPICAL SECTION NO. 2

SR 1563 (SLOOP POINT LOOP RD.)
–L– STA. 13+08.00 TO 31+03.00

NOT TO SCALE

NOTE: PAVEMENT SLOPES ARE 1:1 UNLESS OTHERWISE NOTED.

9/17/13
02-MAR-2017 10:41
R:\Traffic\Traffic03\SR5001CB\Roadway\Doc\SR-5001CB_40924.F78_Sloop Point Loop MUP\ROADWAY\Doc\27.100% Plans\Cadd Files\SR-5001CB_SLOOP POINT LOOP MUP_161107\3CR_PE_PSH_2.dgn
$$$$USERNAME$$$$