DocuSign Envelope ID: C6FE9D7F-DA1C-4D99-A74E-227B1A533984

8/17/99

REVISIONS

PAVEMENT SCHEDULE

C1	PROP. APPROX. 3″ ASPHALT CONCRETE SURFACE COURSE, TYPE S9.5B, AT AN AVERAGE RATE OF 330 LBS. PER SQ. YD.
D1	PROP. APPROX. 4″ ASPHALT CONCRETE INTERMEDIATE COURSE, TYPE I19.0C, AT AN AVERAGE RATE OF 456 LBS. PER SQ. YD.
J1	PROP. 8″ AGGREGATE BASE COURSE.
T	EARTH MATERIAL.
U	EXISTING PAVEMENT.
V	MILLING BITUMINOUS PAVEMENT. (SEE MILLING DETAIL)

NOTE: PAVEMENT EDGE SLOPES ARE 1:1 UNLESS SHOWN OTHERWISE.

NOTES TO CONTRACTOR

Perform the work in accordance with Section 607 of the January 2018 North Carolina Department of Transportation Standard Specifications for Roads and Structures. Resurfacing will be accomplished at the same time as the milling operation.

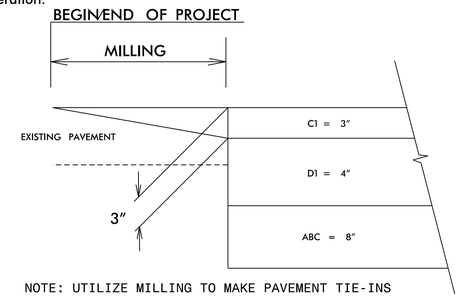

NOTE: UTILIZE MILLING TO MAKE PAVEMENT TIE-INS

WETHERILL ENGINEERING
1223 Jones Franklin Rd.
Raleigh, N.C. 27606
Liscense No. F-0377
Bus: 919 851 8077
Fax: 919 851 8107

TRANSPORTATION PLANNING/DESIGN - BRIDGE/STRUCTURE DESIGN
CIVIL/SITE DESIGN - GIS/GPS - CONSTRUCTION OBSERVATION

PROJECT REFERENCE NO.	SHEET NO.
DF15803.2010016	2A-1
R/W SHEET NO.	

ROADWAY DESIGN ENGINEER
4/14/2021
NORTH CAROLINA PROFESSIONAL SEAL 018981 ENGINEER R. MURPHY
R. Murphy Jr.

DOCUMENT NOT CONSIDERED FINAL UNLESS ALL SIGNATURES COMPLETED

BOONES NECK ROAD (SR 1137)

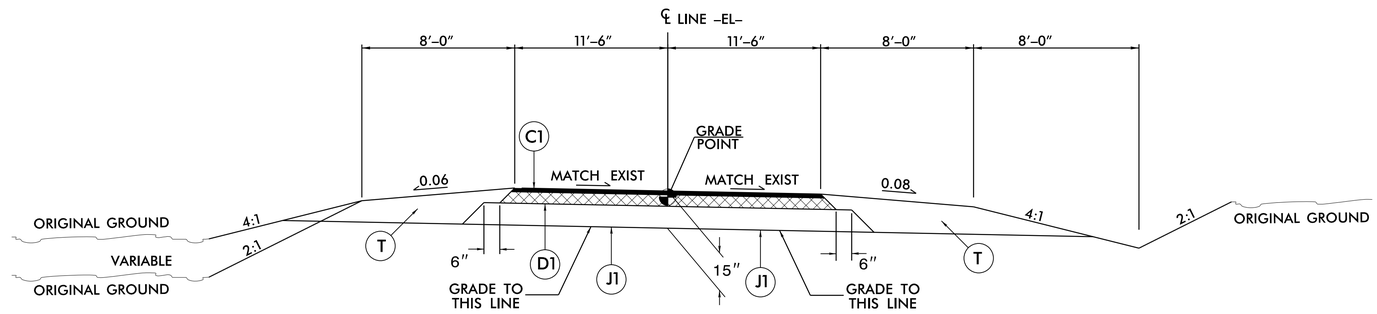

TYPICAL SECTION NO. 1 WITHIN EXCAVATION

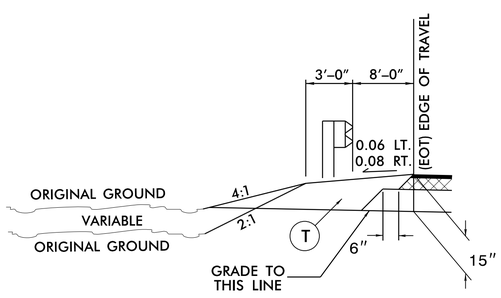

SHOULDER DETAIL

USE SHOULDER DETAIL IN CONJUNCTION WITH TYPICAL SECTION NO. 1:
-EL- 62.5 LF GUARDRAIL ACROSS PROPOSED PIPE LT.
-EL- 62.5 LF GUARDRAIL ACROSS PROPOSED PIPE RT.

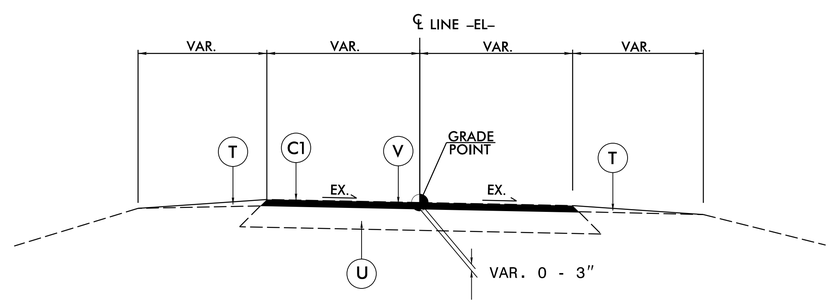

V: MILLING DETAIL

4/7/2021
:\DF15803.2010016_Boones Neck Rd._rdy_psh 2A1.dgn
USER:Raskegerald