DocuSign Envelope ID: 4D36E0E0-0557-434B-B45B-F861DD4081FC

09/08/99

TIP PROJECT: B-5996

CONTRACT: DC00400

See Sheet 1A For Index of Sheets
See Sheet 1B for Symbology Sheet

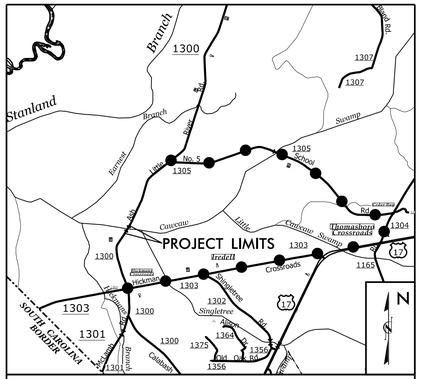

VICINITY MAP — OFFSITE DETOUR

STATE OF NORTH CAROLINA
DIVISION OF HIGHWAYS

BRUNSWICK COUNTY

STATE	STATE PROJECT REFERENCE NO.	SHEET NO.	TOTAL SHEETS
N.C.	B-5996	1	

STATE PROJ. NO.	F.A. PROJ. NO.	DESCRIPTION
48191.1.1	BRZ-1300(019)	PE
48191.2.1	BRZ-1300(019)	RW/UTIL
48191.3.1	BRZ-1300(019)	CONSTRUCTION

LOCATION: REPLACE BRIDGE NO. 126 OVER CAWCAW SWAMP ON SR 1300 (ASH-LITTLE RIVER ROAD)

TYPE OF WORK: GRADING, DRAINAGE, PAVING AND STRUCTURE

NC GRID
NAD 83 NA 2011

4

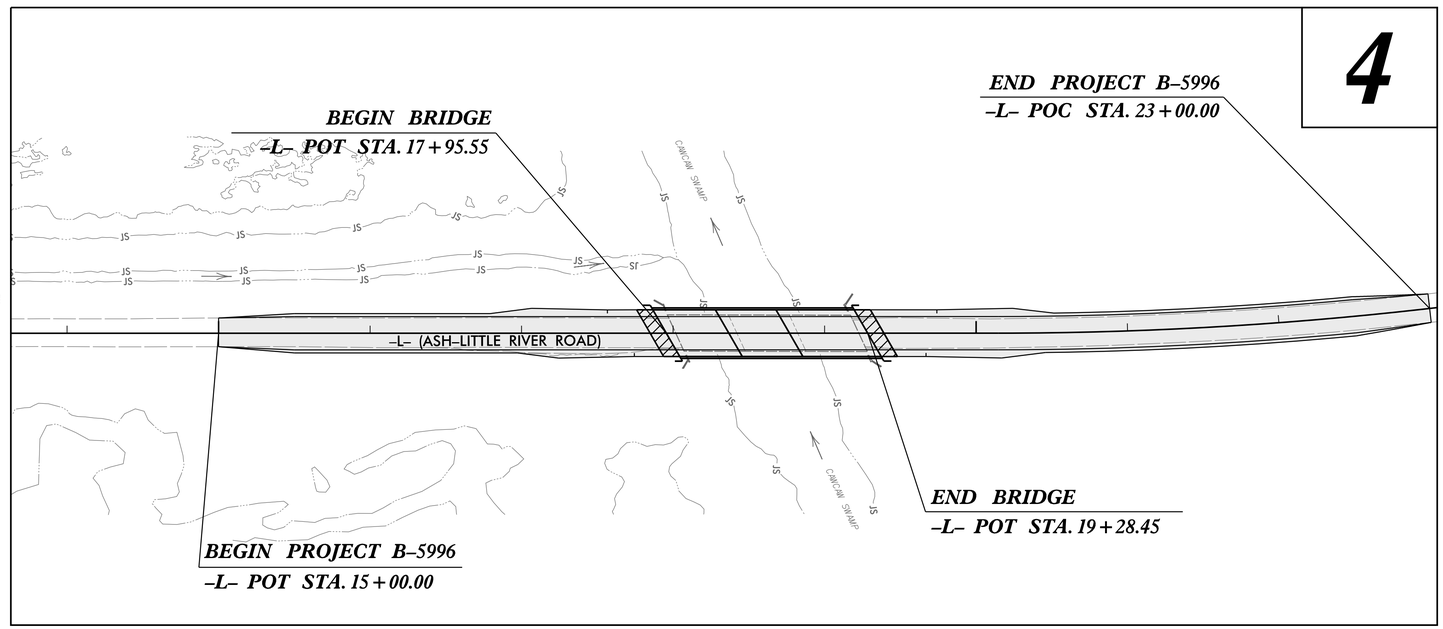

DOCUMENT NOT CONSIDERED FINAL UNLESS ALL SIGNATURES COMPLETED

GRAPHIC SCALES

50 25 0 50 100
PLANS

50 25 0 50 100
PROFILE (HORIZONTAL)

10 5 0 10 20
PROFILE (VERTICAL)

DESIGN DATA

ADT 2022 = 2060
ADT 2042 = 3780
K = 10 %
D = 60 %
T = 6 % *
V = 60 MPH
* TTST = 2% DUAL 4%
FUNC CLASS =
RURAL COLLECTOR
SUB-REGIONAL TIER

PROJECT LENGTH

LENGTH OF ROADWAY PROJECT B-5996	=	0.127 MILES
LENGTH OF STRUCTURE PROJECT B-5996	=	0.025 MILES
TOTAL LENGTH OF PROJECT B-5996	=	0.152 MILES

PREPARED IN THE OFFICE OF:
HNTB
HNTB NORTH CAROLINA, P.C.
343 E. Six Forks Road, Suite 200
Raleigh, North Carolina 27609
NC License No: C-1554
FOR NCDOT DIVISION 3

2018 STANDARD SPECIFICATIONS

RIGHT OF WAY DATE:
JANUARY 20, 2022

LETTING DATE:
JUNE 16, 2022

BRIAN BLACKWELL, PE
PROJECT ENGINEER

ANDREW McOMBER, EI
PROJECT DESIGN ENGINEER

DEREK PIELECH, PE
NCDOT CONTACT

HYDRAULICS ENGINEER

NORTH CAROLINA PROFESSIONAL SEAL 40801 ENGINEER PAUL W. CAMRON

DocuSigned by: Paul Camron
E9B339B26CDF4AC...
SIGNATURE: P.E. 5/11/2022

ROADWAY DESIGN ENGINEER

NORTH CAROLINA PROFESSIONAL SEAL 043122 ENGINEER BRIAN K. BLACKWELL

DocuSigned by: Brian Blackwell
2C4D73BE1EBD4B7...
SIGNATURE: P.E. 5/11/2022

STATE OF NORTH CAROLINA DEPARTMENT OF TRANSPORTATION

11-MAY-2022 16:14
\Roadway\Proj\B-5996_RDY_tsh.dgn
HNTB

DocuSign Envelope ID: 3802F272-5303-4334-98BD-18F21437D59F

8/17/99

PROJECT REFERENCE NO.	SHEET NO.
B-5996	1A

ROADWAY DESIGN ENGINEER

NORTH CAROLINA PROFESSIONAL SEAL 043122 ENGINEER WILLIAM P. BLACKWELL

DocuSigned by: 5/5/2022

DOCUMENT NOT CONSIDERED FINAL UNLESS ALL SIGNATURES COMPLETED

INDEX OF SHEETS

SHEET NUMBER	SHEET
1	TITLE SHEET
1A	INDEX OF SHEETS, GENERAL NOTES & LIST OF STANDARDS
1B	SYMBOLOGY SHEET
2A–1	TYPICAL SECTION SHEET
2C–1 THRU 2C–3	SPECIAL DETAIL SHEETS
3B–1	ROADWAY SUMMARY SHEETS (EARTHWORK, SBG, GUARDRAIL, PIPES)
3G–1	GEOTECHNICAL SUMMARIES
4	PLAN & PROFILE SHEET
RW01 THRU RW04	SURVEY CONTROL & RW SHEETS
TMP–1 THRU TMP–2	TRAFFIC CONTROL PLANS
EC–1 THRU EC–4	EROSION CONTROL PLANS
U0–1 THRU UO–2	UTILITIES BY OTHERS PLANS
X–0	CROSS SECTION SUMMARY
X–1 THRU X–5	CROSS SECTION SHEETS
S–1 THRU S–19	STRUCTURE PLANS

GENERAL NOTES: 2018 SPECIFICATIONS

EFFECTIVE: 01–16–2018
REVISED:

GRADING AND SURFACING:

THE GRADE LINES SHOWN DENOTE THE FINISHED ELEVATION OF THE PROPOSED SURFACING AT GRADE POINTS SHOWN ON THE TYPICAL SECTIONS. GRADE LINES MAY BE ADJUSTED AT THEIR BEGINNING AND ENDING AND AT STRUCTURES AS DIRECTED BY THE ENGINEER IN ORDER TO SECURE A PROPER TIE–IN.

CLEARING:

CLEARING ON THIS PROJECT SHALL BE PERFORMED TO THE LIMITS ESTABLISHED BY MODIFIED METHOD III.

SUPERELEVATION:

ALL CURVES ON THIS PROJECT SHALL BE SUPERELEVATED IN ACCORDANCE WITH STD. NO. 225.04 USING THE RATE OF SUPERELEVATION AND RUNOFF SHOWN ON THE PLANS. SUPERELEVATION IS TO BE REVOLVED ABOUT THE GRADE POINTS SHOWN ON THE TYPICAL SECTIONS.

SHOULDER CONSTRUCTION:

ASPHALT, EARTH, AND CONCRETE SHOULDER CONSTRUCTION ON THE HIGH SIDE OF SUPERELEVATED CURVES SHALL BE IN ACCORDANCE WITH STD. NO. 560.01

SUBSURFACE DRAINS:

SUBSURFACE DRAINS SHALL BE CONSTRUCTED IN ACCORDANCE WITH STD. NO. 815.02 AT LOCATIONS DIRECTED BY THE ENGINEER.

GUARDRAIL:

THE GUARDRAIL LOCATIONS SHOWN ON THE PLANS MAY BE ADJUSTED DURING CONSTRUCTION AS DIRECTED BY THE ENGINEER. THE CONTRACTOR SHOULD CONSULT WITH THE ENGINEER PRIOR TO ORDERING GUARDRAIL MATERIAL.

END BENTS:

THE ENGINEER SHALL CHECK THE STRUCTURE END BENT PLANS, DETAILS, AND CROSS–SECTION PRIOR TO SETTING OF THE SLOPE STAKES FOR THE EMBANKMENT OR EXCAVATION APPROACHING A BRIDGE.

UTILITIES:

UTILITY OWNERS ON THIS PROJECT ARE

SEWER – BRUNSWICK COUNTY PUBLIC UTILITIES

WATER – BRUNSWICK COUNTY PUBLIC UTILITIES

POWER – BRUNSWICK EMC

TELEPHONE/CATV – ATLANTIC TELEPHONE MEMBERSHIP CORP

ANY RELOCATION OF EXISTING UTILITIES WILL BE ACCOMPLISHED BY OTHERS.

RIGHT–OF–WAY MARKERS:

ALL RIGHT–OF–WAY MARKERS ON THIS PROJECT SHALL BE PLACED BY OTHERS.

EFF. 01–16–2018
REV.

2018 ROADWAY ENGLISH STANDARD DRAWINGS

THE FOLLOWING ROADWAY STANDARDS AS APPEAR IN "ROADWAY STANDARD DRAWINGS" HIGHWAY DESIGN BRANCH – N. C. DEPARTMENT OF TRANSPORTATION – RALEIGH, N. C., DATED JANUARY, 2018 ARE APPLICABLE TO THIS PROJECT AND BY REFERENCE HEREBY ARE CONSIDERED A PART OF THESE PLANS:

STD.NO.	TITLE
DIVISION 2 – EARTHWORK	
200.03	METHOD OF CLEARING – MODIFIED METHOD III (SPECIAL DETAIL)
225.02	GUIDE FOR GRADING SUBGRADE – SECONDARY AND LOCAL
225.04	METHOD OF OBTAINING SUPERELEVATION – TWO LANE PAVEMENT
DIVISION 3 – PIPE CULVERTS	
300.01	METHOD OF PIPE INSTALLATION
DIVISION 4 – MAJOR STRUCTURES	
422.02	BRIDGE APPROACH FILLS – TYPE II MODIFIED APPROACH FILL (SPECIAL DETAIL – SEE STRUCTURES PLANS SHEET 19)
DIVISION 5 – SUBGRADE, BASES AND SHOULDERS	
560.01	METHOD OF SHOULDER CONSTRUCTION – HIGH SIDE OF SUPERELEVATED CURVE – METHOD I
DIVISION 8 – INCIDENTALS	
815.02	SUBSURFACE DRAIN
840.00	CONCRETE BASE PAD FOR DRAINAGE STRUCTURES
840.29	FRAMES AND NARROW SLOT FLAT GRATES
840.35	TRAFFIC BEARING GRATED DROP INLET – FOR CAST IRON DOUBLE FRAME AND GRATES
840.66	DRAINAGE STRUCTURE STEPS
846.01	CONCRETE CURB, GUTTER AND CURB & GUTTER
846.04	DROP INLET INSTALLATION IN SHOULDER BERM GUTTER
862.01	GUARDRAIL PLACEMENT
862.02	GUARDRAIL INSTALLATION (SPECIAL DETAIL FOR SHEET 6 OF 8)
862.03	STRUCTURE ANCHOR UNITS (SPECIAL DETAIL FOR TYPE III ANCHOR UNITS 1 OF 7 AND 2 OF 7)
876.02	GUIDE FOR RIP RAP AT PIPE OUTLETS

05-MAY-2022 13:47
R:\Roadway\Proj\B-5996_RDY_GEN.dgn
mjtb

9/10/2021

PROJECT REFERENCE NO.	SHEET NO.
B-5996	1B

STATE OF NORTH CAROLINA, DIVISION OF HIGHWAYS

CONVENTIONAL PLAN SHEET SYMBOLS

Note: Not to Scale

BOUNDARIES AND PROPERTY:

- State Line
- County Line
- Township Line
- City Line
- Reservation Line
- Property Line
- Existing Iron Pin (EIP) — EIP
- Computed Property Corner
- Existing Concrete Monument (ECM) — ECM
- Parcel/Sequence Number — 123
- Existing Fence Line
- Proposed Woven Wire Fence
- Proposed Chain Link Fence
- Proposed Barbed Wire Fence
- Existing Wetland Boundary — WLB
- Proposed Wetland Boundary — WLB
- Existing Endangered Animal Boundary — EAB
- Existing Endangered Plant Boundary — EPB
- Existing Historic Property Boundary — HPB
- Known Contamination Area: Soil
- Potential Contamination Area: Soil
- Known Contamination Area: Water
- Potential Contamination Area: Water
- Contaminated Site: Known or Potential

BUILDINGS AND OTHER CULTURE:

- Gas Pump Vent or U/G Tank Cap
- Sign — S
- Well — W
- Small Mine
- Foundation
- Area Outline
- Cemetery
- Building
- School
- Church
- Dam

HYDROLOGY:

- Stream or Body of Water
- Hydro, Pool or Reservoir
- Jurisdictional Stream — JS
- Buffer Zone 1 — BZ 1
- Buffer Zone 2 — BZ 2
- Flow Arrow
- Disappearing Stream
- Spring
- Wetland
- Proposed Lateral, Tail, Head Ditch — FLOW
- False Sump

RAILROADS:

- Standard Gauge — CSX TRANSPORTATION
- RR Signal Milepost — MILEPOST 35
- Switch — SWITCH
- RR Abandoned
- RR Dismantled

RIGHT OF WAY & PROJECT CONTROL:

- Primary Horiz Control Point
- Primary Horiz and Vert Control Point
- Secondary Horiz and Vert Control Point
- Vertical Benchmark
- Existing Right of Way Monument
- Proposed Right of Way Monument (Rebar and Cap)
- Proposed Right of Way Monument (Concrete)
- Existing Permanent Easement Monument
- Proposed Permanent Easement Monument (Rebar and Cap)
- Existing C/A Monument
- Proposed C/A Monument (Rebar and Cap)
- Proposed C/A Monument (Concrete)
- Existing Right of Way Line
- Proposed Right of Way Line — RW
- Existing Control of Access Line — CA
- Proposed Control of Access Line — CA
- Proposed ROW and CA Line — RW CA
- Existing Easement Line — E
- Proposed Temporary Construction Easement — E
- Proposed Temporary Drainage Easement — TDE
- Proposed Permanent Drainage Easement — PDE
- Proposed Permanent Drainage/Utility Easement — DUE
- Proposed Permanent Utility Easement — PUE
- Proposed Temporary Utility Easement — TUE
- Proposed Aerial Utility Easement — AUE

ROADS AND RELATED FEATURES:

- Existing Edge of Pavement
- Existing Curb
- Proposed Slope Stakes Cut — C
- Proposed Slope Stakes Fill — F
- Proposed Curb Ramp — CR
- Existing Metal Guardrail
- Proposed Guardrail
- Existing Cable Guiderail
- Proposed Cable Guiderail
- Equality Symbol
- Pavement Removal

VEGETATION:

- Single Tree
- Single Shrub
- Hedge
- Woods Line
- Orchard
- Vineyard — Vineyard

EXISTING STRUCTURES:

MAJOR:

- Bridge, Tunnel or Box Culvert — CONC
- Bridge Wing Wall, Head Wall and End Wall — CONC WW

MINOR:

- Head and End Wall — CONC HW
- Pipe Culvert
- Footbridge
- Drainage Box: Catch Basin, DI or JB — CB
- Paved Ditch Gutter
- Storm Sewer Manhole — S
- Storm Sewer — S

UTILITIES:

** SUE – Subsurface Utility Engineering*
LOS – Level of Service – A,B,C or D (Accuracy)

POWER:

- Existing Power Pole
- Proposed Power Pole
- Existing Joint Use Pole
- Proposed Joint Use Pole
- Power Manhole — P
- Power Line Tower
- Power Transformer
- U/G Power Cable Hand Hole — HH
- H-Frame Pole
- U/G Power Line Test Hole (SUE – LOS A)*
- U/G Power Line (SUE – LOS B)* — P
- U/G Power Line (SUE – LOS C)* — P
- U/G Power Line (SUE – LOS D)* — P

TELEPHONE:

- Existing Telephone Pole
- Proposed Telephone Pole
- Telephone Manhole — T
- Telephone Pedestal — T
- Telephone Cell Tower
- U/G Telephone Cable Hand Hole — HH
- U/G Telephone Test Hole (SUE – LOS A)*
- U/G Telephone Cable (SUE – LOS B)* — T
- U/G Telephone Cable (SUE – LOS C)* — T
- U/G Telephone Cable (SUE – LOS D)* — T
- U/G Telephone Conduit (SUE – LOS B)* — TC
- U/G Telephone Conduit (SUE – LOS C)* — TC
- U/G Telephone Conduit (SUE – LOS D)* — TC
- U/G Fiber Optics Cable (SUE – LOS B)* — T FO
- U/G Fiber Optics Cable (SUE – LOS C)* — T FO
- U/G Fiber Optics Cable (SUE – LOS D)* — T FO

WATER:

- Water Manhole — W
- Water Meter
- Water Valve
- Water Hydrant
- U/G Water Line Test Hole (SUE – LOS A)*
- U/G Water Line (SUE – LOS B)* — W
- U/G Water Line (SUE – LOS C)* — W
- U/G Water Line (SUE – LOS D)* — W
- Above Ground Water Line — A/G Water

TV:

- TV Pedestal — C
- TV Tower
- U/G TV Cable Hand Hole — HH
- U/G TV Test Hole (SUE – LOS A)*
- U/G TV Cable (SUE – LOS B)* — TV
- U/G TV Cable (SUE – LOS C)* — TV
- U/G TV Cable (SUE – LOS D)* — TV
- U/G Fiber Optic Cable (SUE – LOS B)* — TV FO
- U/G Fiber Optic Cable (SUE – LOS C)* — TV FO
- U/G Fiber Optic Cable (SUE – LOS D)* — TV FO

GAS:

- Gas Valve
- Gas Meter
- U/G Gas Line Test Hole (SUE – LOS A)*
- U/G Gas Line (SUE – LOS B)* — G
- U/G Gas Line (SUE – LOS C)* — G
- U/G Gas Line (SUE – LOS D)* — G
- Above Ground Gas Line — A/G Gas

SANITARY SEWER:

- Sanitary Sewer Manhole
- Sanitary Sewer Cleanout
- U/G Sanitary Sewer Line — SS
- Above Ground Sanitary Sewer — A/G Sanitary Sewer
- SS Force Main Line Test Hole (SUE – LOS A)*
- SS Force Main Line (SUE – LOS B)* — FSS
- SS Force Main Line (SUE – LOS C)* — FSS
- SS Force Main Line (SUE – LOS D)* — FSS

MISCELLANEOUS:

- Utility Pole
- Utility Pole with Base
- Utility Located Object
- Utility Traffic Signal Box — S
- Utility Unknown U/G Line (SUE – LOS B)* — ?UTL
- U/G Tank; Water, Gas, Oil
- Underground Storage Tank, Approx. Loc. — UST
- A/G Tank; Water, Gas, Oil
- Geoenvironmental Boring
- Abandoned According to Utility Records — AATUR
- End of Information — E.O.I.

DocuSign Envelope ID: 1D430D96-5B49-402D-B800-CD8F92EAA196

6/2/99

PAVEMENT SCHEDULE

C1	PROP. APPROX. 1.5″ ASPHALT CONCRETE SURFACE COURSE TYPE S9.5B AT AN AVERAGE RATE OF 165 LBS. PER SQ. YD.
C2	PROP. APPROX. 3″ ASPHALT CONCRETE SURFACE COURSE, TYPE S9.5B, AT AN AVERAGE RATE OF 165 LBS. PER SQ. YD. PLACED IN TWO LAYERS.
C3	PROP. VAR. DEPTH ASPHALT CONCRETE SURFACE COURSE, TYPE S9.5B, AT AN AVERAGE RATE OF 110 LBS. PER SQ. YD. PER 1″ DEPTH, TO BE PLACED IN LAYERS NOT LESS THAN 1″ IN DEPTH OR GREATER THAN 1½″ IN DEPTH.
E1	PROP. APPROX. 4″ ASPHALT CONCRETE BASE COURSE, TYPE B25.0C, AT AN AVERAGE RATE OF 456 LBS. PER SQ. YD.
E2	PROP. VAR. DEPTH ASPHALT CONCRETE BASE COURSE, TYPE B25.0C, AT AN AVERAGE RATE OF 114 LBS. PER SQ. YD. PER 1″ DEPTH. TO BE PLACED IN LAYERS NOT LESS THAN 3″ IN DEPTH OR GREATER THAN 5½″ IN DEPTH.
R1	SHOULDER BERM GUTTER
T	EARTH MATERIAL.
U	EXISTING PAVEMENT.
V	INCIDENTAL MILLING
W	VARIABLE DEPTH ASPHALT PAVEMENT (SEE STANDARD WEDGING DETAIL NO.1, THIS SHEET)

ALL PAVEMENT EDGE SLOPES ARE 1:1 UNLESS SHOWN OTHERWISE

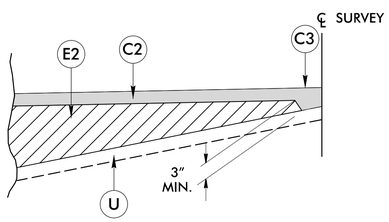

DETAIL SHOWING METHOD OF WEDGING

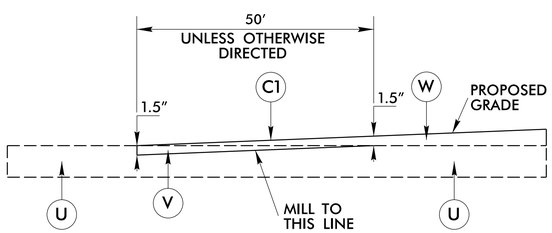

DETAIL FOR INCIDENTAL MILLING

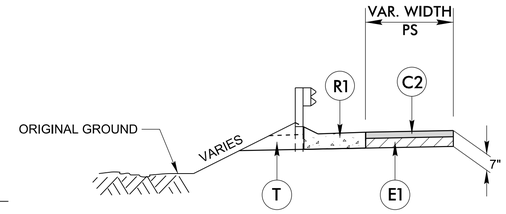

DETAIL A

SHOULDER BERM GUTTER LOCATIONS
-L- STA 17+56.64 TO STA 17+76.00 LT
-L- STA 17+74.44 TO STA 17+91.10 RT
-L- STA 19+32.90 TO STA 19+74.14 LT
-L- STA 19+48.00 TO STA 19+66.94 RT

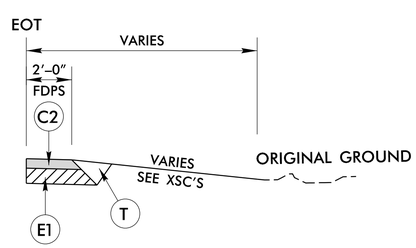

DETAIL B

DETAIL FOR SHOULDER GRADING
-L- STA 15+00.00 TO STA 17+40.00 RT

HNTB
HNTB NORTH CAROLINA, P.C.
343 E. Six Forks Road, Suite 200
Raleigh, North Carolina 27609
NC License No: C-1554

PROJECT REFERENCE NO.	SHEET NO.
B–5996	2A–1

PAVEMENT DESIGN ENGINEER: NORTH CAROLINA PROFESSIONAL SEAL 022896 ENGINEER — Chris S. Henderson — 5/10/2022

ROADWAY DESIGN ENGINEER: NORTH CAROLINA PROFESSIONAL SEAL 043122 ENGINEER — Brian P. Blackwell — 5/10/2022

DOCUMENT NOT CONSIDERED FINAL UNLESS ALL SIGNATURES COMPLETED

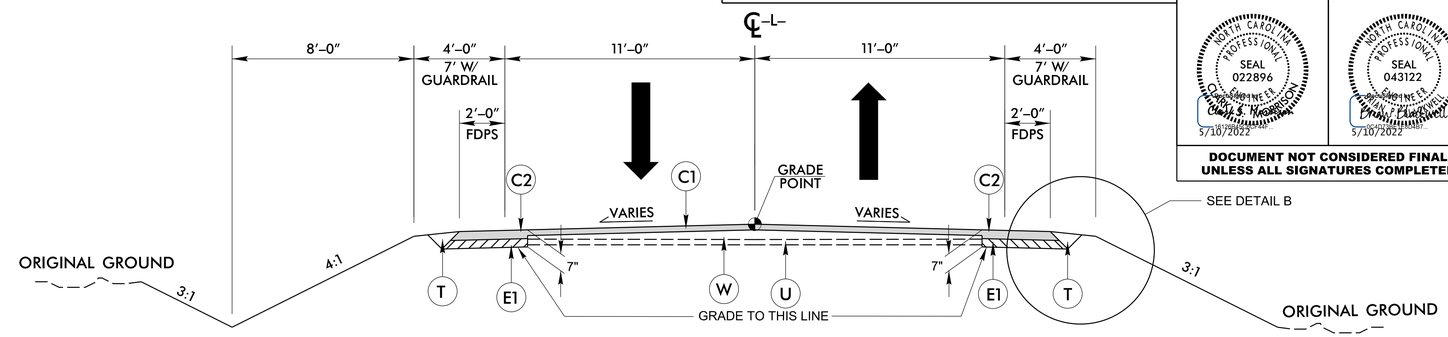

TYPICAL SECTION NO. 1

–L– SR 1300 (ASH–LITTLE RIVER RD)

USE TYPICAL SECTION NO. 1 FROM:
-L- STA 15+00 TO 15+50
-L- STA 21+00 TO STA 23+00

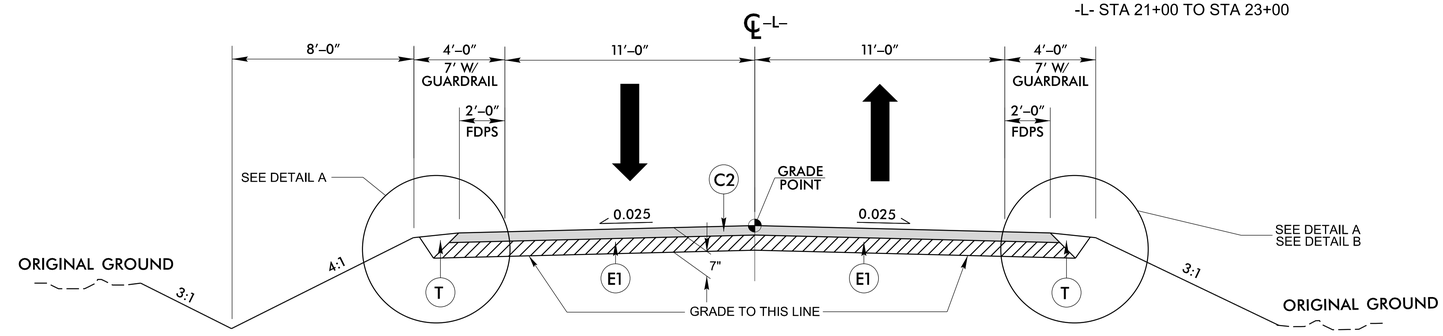

TYPICAL SECTION NO. 2

–L– SR 1300 (ASH–LITTLE RIVER RD)

USE TYPICAL SECTION NO. 2 FROM:
-L- STA 15+50 TO STA 17+95.55 (BRIDGE)
-L- STA 19+28.45 (BRIDGE) TO STA 21+00

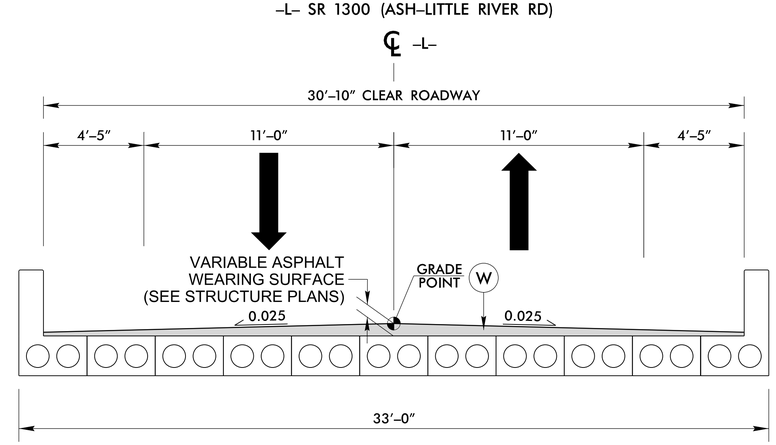

USE TYPICAL SECTION NO. 3 FROM:
-L- STA 17+95.55 (BRIDGE)
TO
STA 19+28.45 (BRIDGE)

TYPICAL SECTION NO. 3

–L– SR 1300 (ASH–LITTLE RIVER RD)
CORED SLAB BRIDGE OVERLAY

10-MAY-2022 09:13
\\Ts-fileshare\Projects\B-5996\Roadway\Plans\B-5996_RDY_TYP.dgn
HNTB

DocuSign Envelope ID: 3802F272-5303-4334-98BD-18F21437D59F

5/14/99

PROJECT REFERENCE NO.	SHEET NO.
B-5996	2C-1

STATE OF
NORTH CAROLINA
DEPT. OF TRANSPORTATION
DIVISION OF HIGHWAYS
RALEIGH, N.C.

ENGLISH DETAIL DRAWING FOR
METHOD OF CLEARING
MODIFIED METHOD - III

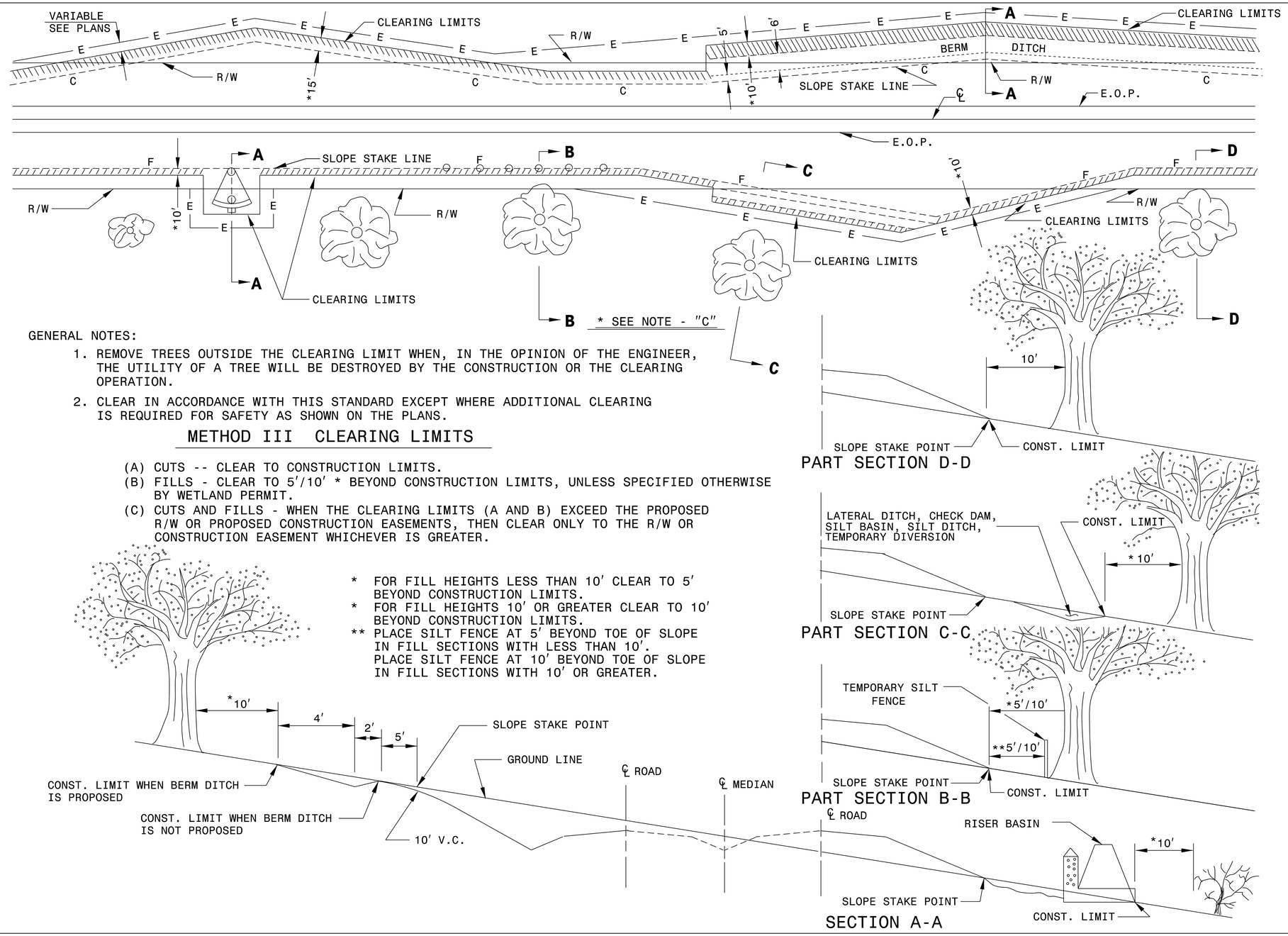

GENERAL NOTES:

1. REMOVE TREES OUTSIDE THE CLEARING LIMIT WHEN, IN THE OPINION OF THE ENGINEER, THE UTILITY OF A TREE WILL BE DESTROYED BY THE CONSTRUCTION OR THE CLEARING OPERATION.
2. CLEAR IN ACCORDANCE WITH THIS STANDARD EXCEPT WHERE ADDITIONAL CLEARING IS REQUIRED FOR SAFETY AS SHOWN ON THE PLANS.

METHOD III CLEARING LIMITS

(A) CUTS -- CLEAR TO CONSTRUCTION LIMITS.
(B) FILLS - CLEAR TO 5'/10' * BEYOND CONSTRUCTION LIMITS, UNLESS SPECIFIED OTHERWISE BY WETLAND PERMIT.
(C) CUTS AND FILLS - WHEN THE CLEARING LIMITS (A AND B) EXCEED THE PROPOSED R/W OR PROPOSED CONSTRUCTION EASEMENTS, THEN CLEAR ONLY TO THE R/W OR CONSTRUCTION EASEMENT WHICHEVER IS GREATER.

* FOR FILL HEIGHTS LESS THAN 10' CLEAR TO 5' BEYOND CONSTRUCTION LIMITS.
* FOR FILL HEIGHTS 10' OR GREATER CLEAR TO 10' BEYOND CONSTRUCTION LIMITS.
** PLACE SILT FENCE AT 5' BEYOND TOE OF SLOPE IN FILL SECTIONS WITH LESS THAN 10'. PLACE SILT FENCE AT 10' BEYOND TOE OF SLOPE IN FILL SECTIONS WITH 10' OR GREATER.

SHEET 1 OF 1
200D03

STATE OF
NORTH CAROLINA
DEPT. OF TRANSPORTATION
DIVISION OF HIGHWAYS
RALEIGH, N.C.

ENGLISH DETAIL DRAWING FOR
METHOD OF CLEARING
MODIFIED METHOD - III

SHEET 1 OF 1
200D03

NORTH CAROLINA PROFESSIONAL SEAL 022071 ENGINEER
5/5/2022

DOCUMENT NOT CONSIDERED FINAL UNLESS ALL SIGNATURES COMPLETED

CONTRACT STANDARDS AND DEVELOPMENT UNIT
Office 919-707-6950 FAX 919-250-4119

SEE TITLE BLOCK

ORIGINAL BY:	T.S.S.	DATE:	FEB.2000
MODIFIED BY:	K.A.K.	DATE:	AUG.2016
CHECKED BY:		DATE:	
FILE SPEC.:	kkempf/english/0200d301.dgn		

05-DEC-2017 (0:3)
S:\Contracts\Special Details\kkempf\english\0200D301_modified method III CandG.dgn
Contracts AT CSD-292695
jhowerton

DocuSign Envelope ID: 3802F272-5303-4334-98BD-18F21437D59F

PROJECT REFERENCE NO.	SHEET NO.
B-5996	2C-2

DOCUMENT NOT CONSIDERED FINAL UNLESS ALL SIGNATURES COMPLETED

STATE OF NORTH CAROLINA
DEPT. OF TRANSPORTATION
DIVISION OF HIGHWAYS
RALEIGH, N.C.

ROADWAY DETAIL DRAWING FOR
GUARDRAIL INSTALLATION

SHEET 6 OF 8
862D02

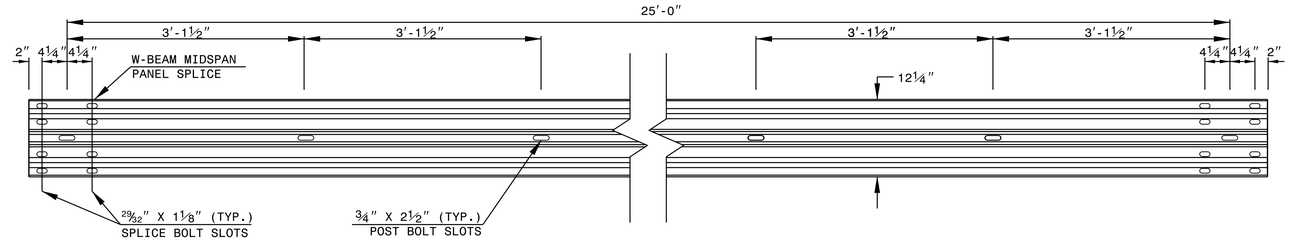

STANDARD W-BEAM GUARDRAIL

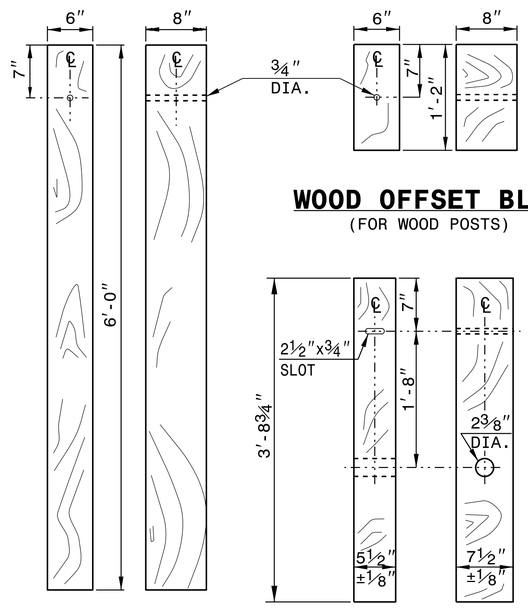

STANDARD LINE POST

WOOD OFFSET BLOCK
(FOR WOOD POSTS)

SHORT WOOD BREAKAWAY POST

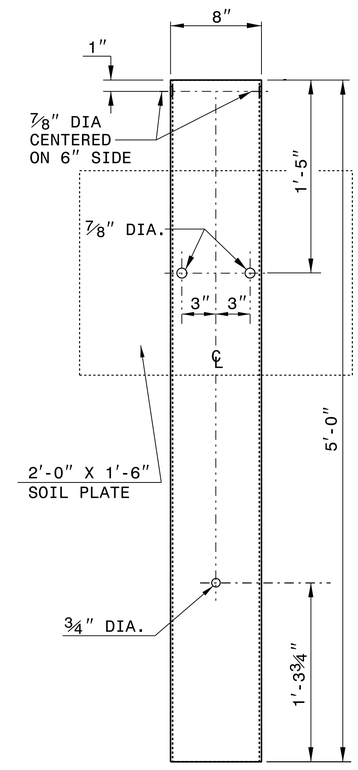

STEEL TUBE
TS 6"x8"x0.1875"

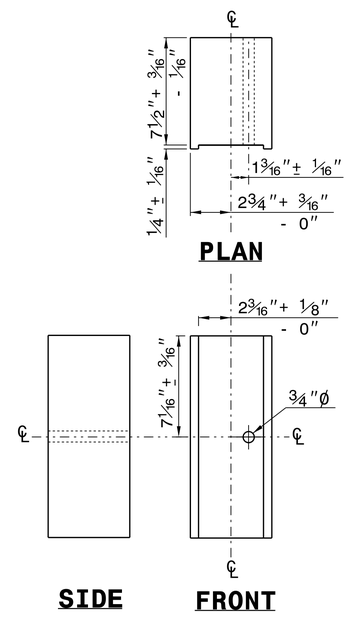

ROUTED OFFSET BLOCK

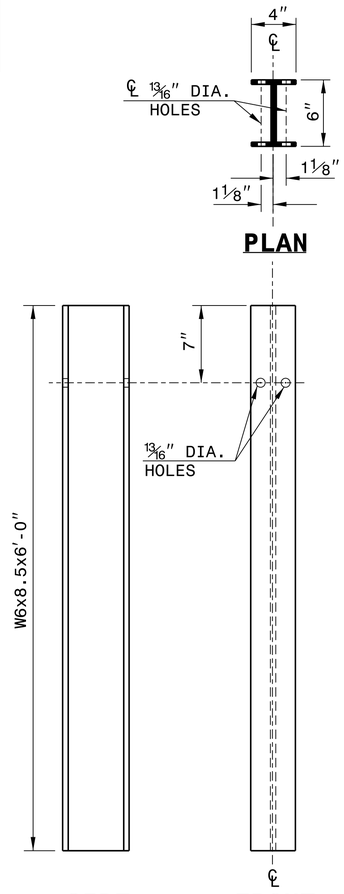

"W6" STEEL POST

SYSTEM PARTS

STATE OF NORTH CAROLINA
DEPT. OF TRANSPORTATION
DIVISION OF HIGHWAYS
RALEIGH, N.C.

ROADWAY DETAIL DRAWING FOR
GUARDRAIL INSTALLATION

SHEET 6 OF 8
862D02

NORTH CAROLINA PROFESSIONAL SEAL 022071 ENGINEER
5/5/2022

CONTRACTS STANDARDS AND DEVELOPMENT UNIT
Office 919-707-6950 FAX 919-250-4119

SEE TITLE BLOCK

ORIGINAL BY: J.HOWERTON DATE: 3-7-2018
MODIFIED BY: DATE:
CHECKED BY: DATE:
FILE SPEC.:

DocuSign Envelope ID: 380CF272-5303-4334-98BD-1BF214370D6F

14-DEC-2017 10:36
S:\Contracts\Contracts\Special Details\jhowerton\Standard Drawings\2018 Standard Drawings\Details in Lieu of Standards\Division 8\0862d0301.dgn
jhowerton AT CSD-292595

STATE OF NORTH CAROLINA
DEPT. OF TRANSPORTATION
DIVISION OF HIGHWAYS
RALEIGH, N.C.

ROADWAY DETAIL DRAWING FOR
STRUCTURE ANCHOR UNITS
GUARDRAIL ANCHOR UNIT, TYPE III
FOR ATTACHMENT TO RAIL ON BRIDGE

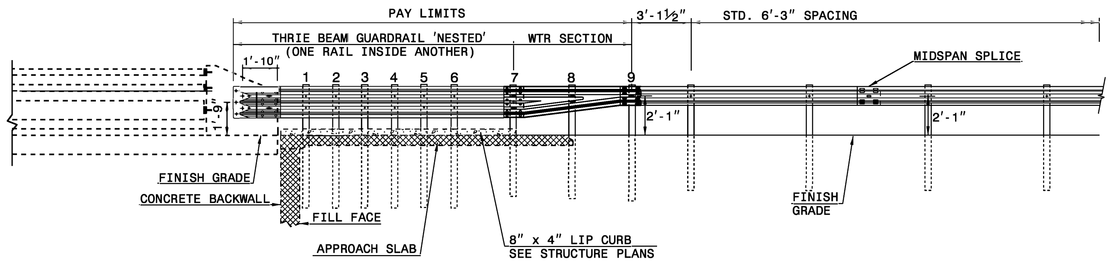

ELEVATION

NOTE:
**POST NOT REQUIRED FOR SKEW ANGLES GREATER THAN 150° OR LESS THAN 30° UNLESS OTHERWISE DIRECTED BY THE ENGINEER.
*THE DISTANCE FROM END OF BRIDGE RAIL TO CENTER LINE OF THE FIRST POST SHOULD BE 11½" IF CONCRETE BACKWALL IS NOT PRESENT.
-SHOULDER BERM GUTTER MUST BE INSTALLED TO THE LIMITS 8" x 4" LIP CURB IS SHOWN IF ANCHOR UNIT IS NOT ADJACENT TO AN APPROACH SLAB.
-MEASURE GUARDRAIL HEIGHT FROM THE TOP OF ADJACENT SURFACE (SHOULDER, BERM, OR GUTTER).
-LAP JOINTS IN THE DIRECTION OF TRAFFIC FLOW.
-SEE SHEET 3 FOR POST SECTIONS 1 THRU 9.

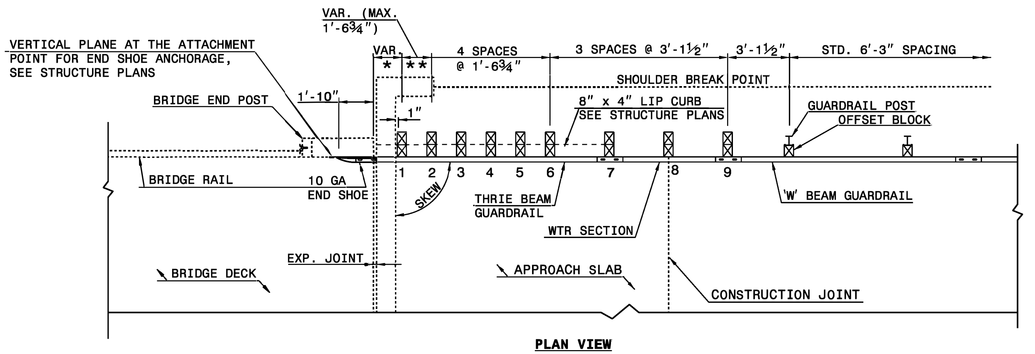

PLAN VIEW

GUARDRAIL ANCHOR UNIT, TYPE III FOR ATTACHMENT TO RAIL ON BRIDGE

SHEET 1 OF 7
862D03

STATE OF NORTH CAROLINA
DEPT. OF TRANSPORTATION
DIVISION OF HIGHWAYS
RALEIGH, N.C.

ROADWAY DETAIL DRAWING FOR
STRUCTURE ANCHOR UNITS
GUARDRAIL ANCHOR UNIT, TYPE III
FOR ATTACHMENT TO RAIL ON BRIDGE

SHEET 1 OF 7
862D03

STATE OF NORTH CAROLINA
DEPT. OF TRANSPORTATION
DIVISION OF HIGHWAYS
RALEIGH, N.C.

ROADWAY DETAIL DRAWING FOR
STRUCTURE ANCHOR UNITS
GUARDRAIL ANCHOR UNIT, TYPE III FOR ATTACHMENT TO RAIL ON BRIDGE - SUB REGIONAL TIER

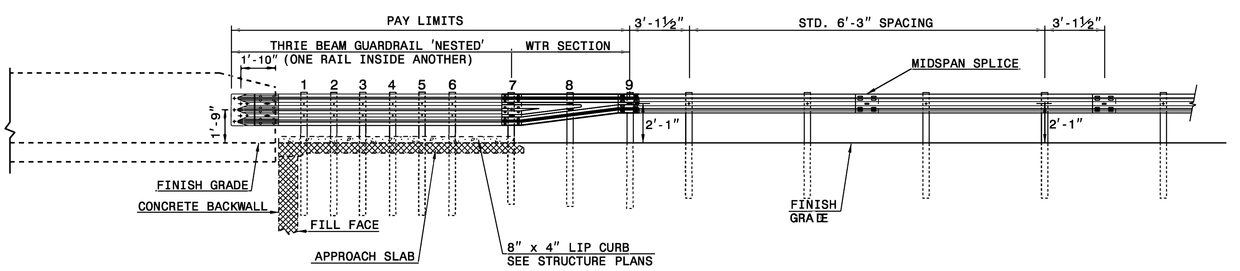

ELEVATION

NOTE:
**POST NOT REQUIRED FOR SKEW ANGLES GREATER THAN 150° OR LESS THAN 30° UNLESS OTHERWISE DIRECTED BY THE ENGINEER.
*THE DISTANCE FROM END OF BRIDGE RAIL TO CENTER LINE OF THE FIRST POST SHOULD BE 11½" IF CONCRETE BACKWALL IS NOT PRESENT.
-SHOULDER BERM GUTTER MUST BE INSTALLED TO THE LIMITS 8" x 4" LIP CURB IS SHOWN IF ANCHOR UNIT IS NOT ADJACENT TO AN APPROACH SLAB.
-MEASURE GUARDRAIL HEIGHT FROM THE TOP OF ADJACENT SURFACE (SHOULDER, BERM, OR GUTTER).
-LAP JOINTS IN THE DIRECTION OF TRAFFIC FLOW.
-SEE SHEET 3 FOR POST SECTIONS 1 THRU 9.

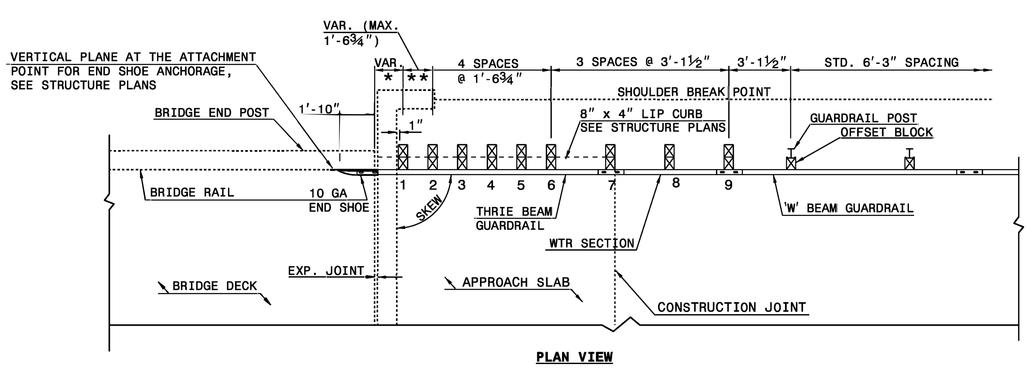

PLAN VIEW

GUARDRAIL ANCHOR UNIT, TYPE III FOR ATTACHMENT TO RAIL ON BRIDGE - SUB REGIONAL TIER

SHEET 2 OF 7
862D03

STATE OF NORTH CAROLINA
DEPT. OF TRANSPORTATION
DIVISION OF HIGHWAYS
RALEIGH, N.C.

ROADWAY DETAIL DRAWING FOR
STRUCTURE ANCHOR UNITS
GUARDRAIL ANCHOR UNIT, TYPE III FOR ATTACHMENT TO RAIL ON BRIDGE - SUB REGIONAL TIER

SHEET 2 OF 7
862D03

SEE TITLE BLOCK

ORIGINAL BY: J. HOWERTON DATE: 06-22-12
MODIFIED BY: DATE:
CHECKED BY: DATE:
FILE SPEC.:

CONTRACT STANDARDS AND DEVELOPMENT UNIT
Office 919-707-6950 FAX 919-250-4119

DOCUMENT NOT CONSIDERED FINAL UNLESS ALL SIGNATURES COMPLETED

NORTH CAROLINA PROFESSIONAL SEAL 022074 ENGINEER
5/5/2022

PROJECT REFERENCE NO. B-5996
SHEET NO. 2C-3

COMPUTED BY: TAR	DATE: 10/28/2021
CHECKED BY: TSG	DATE: 11/15/2021

STATE OF NORTH CAROLINA
DIVISION OF HIGHWAYS

HNTB HNTB NORTH CAROLINA, P.C. 343 E. Six Forks Road, Suite 200 Raleigh, North Carolina 27609 NC License No: C-1554

PROJECT REFERENCE NO.	SHEET NO.
B-5996	3B-1

SUMMARY OF EARTHWORK

STATION	STATION	UNCL. EXCAV.	EMBANK. +%	BORROW	WASTE
-L- STA 15+00.00	-L- STA 17+95.55 (BRIDGE)	214	5		209
-L- STA 19+28.45 (BRIDGE)	-L- STA 23+00.00	100	239	139	
TOTALS:		314	244	139	209
WASTE IN LIEU OF BORROW				-139	-139
PROJECT TOTALS:		314	244		70
EST. 5% TO REPLACE TOP SOIL ON BORROW PIT					
GRAND TOTALS:		314	244		70
SAY:		350			

PAVEMENT REMOVAL SUMMARY

SURVEY LINE	STATION	STATION	LOCATION LT/RT/CL	YD²
-L-	15+50.00	18+01.79	CL	592
-L-	19+22.62	21+00.00	CL	382
			TOTAL:	974
			SAY:	1000

UNDERCUT EXCAVATION PER GEOTECH RECS (CONTINGENCY): 300 CY
SELECT GRANULAR MATERIAL PER GEOTECH RECS (CONTINGENCY): 300 CY
GEOTEXTILE FOR SOIL STABILIZATION PER GEOTECH RECS (CONTINGENCY): 300 SY

Note: Approximate quantities only. Unclassified Excavation, Fine Grading, Clearing and Grubbing, and Removal of Existing Pavement will be paid for at the contract lump sum price for "Grading."

Earthwork quantities are calculated by the Roadway Design Unit. These earthwork quantities are based in part on subsurface data provided by the Geotechnical Engineering Unit.

SHOULDER BERM GUTTER SUMMARY

SURVEY LINE	STATION	STATION	LENGTH (FT)
-L- (LT)	17+56.64	17+77.30	20.66
-L- (LT)	19+31.60	19+74.14	42.54
-L- (RT)	17+74.44	17+92.40	17.96
-L- (RT)	19+46.70	19+66.94	20.24
		TOTAL:	101.40'
		SAY:	105'

ROW AREA DATA SUMMARY

PARCEL NO.	PROPERTY OWNERS NAMES	PROP. R/W	PERM. UTILITY EASE.	PERM. DRAIN. EASE.	TEMP. DRAINAGE EASE.	CONST. EASE.
1	KIRMY VIVIAN LONG			360.00 SF		1125.64 SF
2	VICTORIA GALE NORRIS					2536.73 SF
3	FALCON RETREAT LLC			360.00 SF		3067.95 SF
4	VICTORIA GALE NORRIS					3227.75 SF

"N" = DISTANCE FROM EDGE OF LANE TO FACE OF GUARDRAIL.
TOTAL SHOULDER WIDTH = DISTANCE FROM EDGE OF TRAVEL LANE TO SHOULDER BREAK POINT.
FLARE LENGTH = DISTANCE FROM LAST SECTION OF PARALLEL GUARDRAIL TO END OF GUARDRAIL.
W = TOTAL WIDTH OF FLARE FROM BEGINNING OF TAPER TO END OF GUARDRAIL.
G = GATING IMPACT ATTENUATOR TL-3
NG = NON-GATING IMPACT ATTENUATOR TL-3

GUARDRAIL SUMMARY

SURVEY LINE	BEG. STA.	END STA.	LOCATION	LENGTH STRAIGHT	LENGTH SHOP CURVED	LENGTH DOUBLE FACED	WARRANT POINT APPROACH END	WARRANT POINT TRAILING END	"N" DIST. FROM E.O.L.	TOTAL SHOUL. WIDTH	FLARE LENGTH APPROACH END	FLARE LENGTH TRAILING END	W APPROACH END	W TRAILING END
-L-	17+06.64	17+86.65 (BRIDGE)	LT	80.01'				17+86.65 (BRIDGE)	4.42'	7.42'-8.42'		50'		1.0'
-L-	17+24.44	18+04.45 (BRIDGE)	RT	80.01'			18+04.45 (BRIDGE)		4.42'	7.42'-8.42'	50'		1.0'	
-L-	19+19.55 (BRIDGE)	20+24.20	LT	104.65'			19+19.55 (BRIDGE)		4.42'	7.42'-8.42'		50'		1.0'
-L-	19+37.35 (BRIDGE)	20+16.92	RT	79.57'				19+37.35 (BRIDGE)	4.42'	7.42'-8.42'	50'		1.0'	
		SUBTOTAL:		344.24'										
		GREU TL-3: 4@50'		-200'										
		TYPE III:4@18.75'		-75'										
			TOTAL:	69.24'										
			SAY:	75.00'										
			5 ADDITIONAL POST											

SURVEY LINE	BEG. STA.	ANCHORS XI MOD	ANCHORS TYPE III	ANCHORS GREU TL-3	ANCHORS M-350	ANCHORS XIII	ANCHORS CAT-1	ANCHORS VI MOD	ANCHORS BIC	ANCHORS AT-1	IMPACT ATTENUATOR TYPE 350 EA	G	NG	SINGLE FACED GUARDRAIL	REMOVE EXISTING GUARDRAIL	REMOVE AND STOCKPILE EXISTING GUARDRAIL	REMARKS
-L-	17+06.64		1	1													
-L-	17+24.44		1	1													
-L-	19+19.55 (BRIDGE)		1	1													
-L-	19+37.35 (BRIDGE)		1	1													
SUBTOTAL:			4	4													
TOTAL:			4	4													
SAY:			4	4													

LIST OF PIPES, ENDWALLS, ETC. (FOR PIPES 48" & UNDER)

CAAP: 12", 15", 18", 24", 30", 36", 42", 48" (thickness or gauge: 24" .064, 30" .079, 42" .109)
BITUMINOUS COATED C.S. PIPE TYPE B (UNLESS NOTED OTHERWISE): 12", 15", 18", 24", 30", 36", 42", 48" (thickness or gauge: .064, .064, .064, .064, .079, .079, .109, .109)
CLASS IV R.C. PIPE OR C.S. PIPE, TYPE IR OR HDPE PIPE, TYPE S OR D: 12", 15", 18", 24", 30", 36", 42", 48"

STATION / SIZE / THICKNESS OR GAUGE	LOCATION (LT, RT, OR CL)	STRUCTURE NO. FROM	STRUCTURE NO. TO	TOP ELEVATION	INVERT ELEVATION	INVERT ELEVATION	SLOPE CRITICAL	CAAP (all sizes)	BITUMINOUS COATED C.S. PIPE (all sizes)	CLASS IV R.C. PIPE 15"	15" SIDE DRAIN PIPE	18" SIDE DRAIN PIPE	24" SIDE DRAIN PIPE	ENDWALLS STD. 838.01, STD. 838.11 OR STD. 838.80 (UNLESS NOTED OTHERWISE) CU. YDS. R.C.P.	C.S.P.
-L- 17+80.00	RT	0401		25.9	23.2										
		0401	0402		23.2	22.4				32					
-L- 17+65.00	LT	0402		25.9	22.4										
		0402	0403		22.4	21.0				20					
-L- 19+60.00	RT	0405		25.6	22.9										
		0405	0406		22.9	22.1				28					
-L- 19+60.00	LT	0406		25.6	22.1										
		0406	0407		22.1	20.2				20					
TOTAL										100					

STATION	QUANTITIES FOR DRAINAGE STRUCTURES PER EACH (0' THRU 5.0')	* TOTAL L.F. FOR PAY QUANTITY SHALL BE COL. 'A' + (1.3 X COL. B') LIN. FT. A: 5.0' THRU 10.0'	B: 10.0' AND ABOVE	C.B. STD. 840.01 OR STD. 840.02	FRAME, GRATES AND HOOD STANDARD 840.03 TYPE OF GRATE E	F	G	D.I. STD. 840.14 OR STD. 840.15	D.I. FRAME & GRATE STD. 840.16	G.D.I. TYPE "A" STD. 840.17 OR 840.26	G.D.I. TYPE "B" STD. 840.18 OR 840.27	G.D.I. TYPE "D" STD. 840.19 OR 840.28	G.D.I. FRAME WITH GRATE STD. 840.22	G.D.I. FRAME WITH TWO GRATES STD. 840.22	G.D.I. (N.S.) FRAME WITH GRATE STD. 840.24	G.D.I. (N.S.) FRAME WITH TWO GRATES STD. 840.24	T.B.D.I. (N.S.) FRAME AND TWO GRATES STD. 840.29	J.B. STD. 840.31 OR 840.32	TB GRATED D.I., TYPE 'B' STD. 840.35	CORR. STEEL ELBOWS NO. & SIZE	CONC. COLLARS CL. "B" C.Y. STD 840.72	CONC. & BRICK PIPE PLUG, C.Y. STD. 840.71	PIPE REMOVAL LIN.FT.	REMARKS
-L- 17+80.00	1																1		1					
-L- 17+65.00	1																1		1					
-L- 19+60.00 (RT)	1																1		1					
-L- 19+60.00 (LT)	1																1		1					
TOTAL	4																4		4					

ABBREVIATIONS

C.B.	CATCH BASIN
N.D.I.	NARROW DROP INLET
D.I.	DROP INLET
G.D.I.	GRATED DROP INLET
G.D.I. (N.S.)	GRATED DROP INLET (NARROW SLOT)
J.B.	JUNCTION BOX
M.H.	MANHOLE
T.B.D.I.	TRAFFIC BEARING DROP INLET
T.B.J.B.	TRAFFIC BEARING JUNCTION BOX

12/06/07

05-MAY-2022 13:47
\Roadway\Proj\B-5996_RDY_SUM.dgn
HNTB

COMPUTED BY: Tyler C. Bottoms___ DATE: 2/3/22
CHECKED BY: Thein Tun Zan DATE: 2-8-22

(12-17-19)

PROJECT NO.	SHEET NO.
B-5996	3G-1

STATE OF NORTH CAROLINA
DIVISION OF HIGHWAYS

SUMMARY OF SUBSURFACE DRAINAGE

LINE	Station	Station	Location LT/RT/CL	Drain Type* UD/BD/SD	LF
CONTINGENCY				SD	200
				TOTAL LF:	200

*UD = Underdrain
*BD = Blind Drain
*SD = Subsurface Drain

SUMMARY OF GEOTEXTILE FOR PAVEMENT STABILIZATION

LINE	Station	Station	Geotextile for Pavement Stabilization SY	Class IV Subgrade Stabilization TONS
CONTINGENCY				
	TOTAL SY/TONS:		0	0*

*Total tons of "Class IV Subgrade Stabilization" is only the estimated quantity for pavement stabilization and may only represent a portion of the subgrade stabilization quantity shown in the Item Sheets of the Proposal.

SUMMARY OF AGGREGATE SUBGRADE/STABILIZATION

LINE	Station	Station	Aggregate Type* ASU(1/2)/ AST	Aggregate Thickness INCHES [8" for ASU(2)]	Shallow Undercut CY	Class IV Subgrade Stabilization TONS	Geotextile for Soil Stabilization SY	Stabilizer Aggregate TONS	Class IV Aggregate Stabilization TONS
CONTINGENCY									
			TOTAL CY/TONS/SY:		0	0**	0**	0	0

*ASU(1/2) = Aggregate Subgrade (Type 1 or 2)
*AST = Aggregate Stabilization
**Total tons of "Class IV Subgrade Stabilization" and total square yards of "Geotextile for Soil Stabilization" are only the estimated quantities for ASU(1/2)/AST and may only represent a portion of the subgrade stabilization and geotextile quantities shown in the Item Sheets of the Proposal.

SUMMARY OF ROCK PLATING

LINE	Beginning Slope (H:V)	Approx. Station	Ending Slope (H:V)	Approx. Station	Location LT/RT	Rock Plating Detail No. 1/2/3/4	Riprap Class* 1/2/B	Rock Plating SY
							TOTAL SY:	0

*Use Class 1, 2 or B riprap if riprap class is not shown for rock plating location.

SUMMARY OF REINFORCED SOIL SLOPES AND SLOPE EROSION CONTROL

LINE	Beginning Slope/ RSS (H:V)	Approx. Station	Ending Slope/ RSS (H:V)	Approx. Station	Location LT/RT	Reinforced Soil Slope (RSS) SY	Geocells SY	Coir Fiber Mat SY	Matting for Erosion Control SY
					TOTAL SY:	0	0	0*	0**

*Total square yards of "Coir Fiber Mat" is only the estimated quantity for slopes steeper than 2:1 (H:V) and may only represent a portion of the coir fiber mat quantity shown in the Item Sheets of the Proposal.
**Total square yards of "Matting for Erosion Control" is only the estimated quantity for RSS and may only represent a portion of the matting quantity shown in the Item Sheets of the Proposal.

SUMMARY OF PRE-SPLITTING OF ROCK

LINE	Beginning Rock Cut Slope (H:V)	Approx. Station	Ending Rock Cut Slope (H:V)	Approx. Station	Location LT/RT	Pre-splitting of Rock SY
					TOTAL SY:	0

SUMMARY OF HORIZONTAL DRAINS

LINE	Approximate Station	Location LT/RT	Elevation Above or Below Grade (+/-) FT	Inclination Angle DEGREES	PVC Pipe Schedule 40/80 or NO PIPE	Horizontal Drain FT	Horizontal Drain W/O Pipe FT
CONTINGENCY							
					TOTAL FT:	0	0

SUMMARY OF SETTLEMENT GAUGES

Gauge No.	LINE and Station	Offset	
		Distance FT	Direction LT/RT
	TOTAL GAUGES (EACH):		

SUMMARY OF SURCHARGES AND SURCHARGE WAITING PERIODS

LINE	Station	Station	Surcharge Height FT	MONTHS

SUMMARY OF EMBANKMENT WAITING PERIODS

LINE	Station	Station	MONTHS

SUMMARY OF BRIDGE WAITING PERIODS

Bridge Description	End Bent/ Bent No.	MONTHS

DocuSign Envelope ID: 3802F272-5303-4334-98BD-18F21437D59F

8/17/99

HNTB
HNTB NORTH CAROLINA, P.C.
343 E. Six Forks Road, Suite 200
Raleigh, North Carolina 27609
NC License No: C-1554

PROJECT REFERENCE NO.	SHEET NO.
B-5996	4
R/W SHEET NO.	

ROADWAY DESIGN ENGINEER: NORTH CAROLINA PROFESSIONAL SEAL 043122 ENGINEER BRIAN E. BLACKWELL — 5/5/2022

HYDRAULICS ENGINEER: NORTH CAROLINA PROFESSIONAL SEAL 40801 ENGINEER — 5/5/2022

DOCUMENT NOT CONSIDERED FINAL UNLESS ALL SIGNATURES COMPLETED

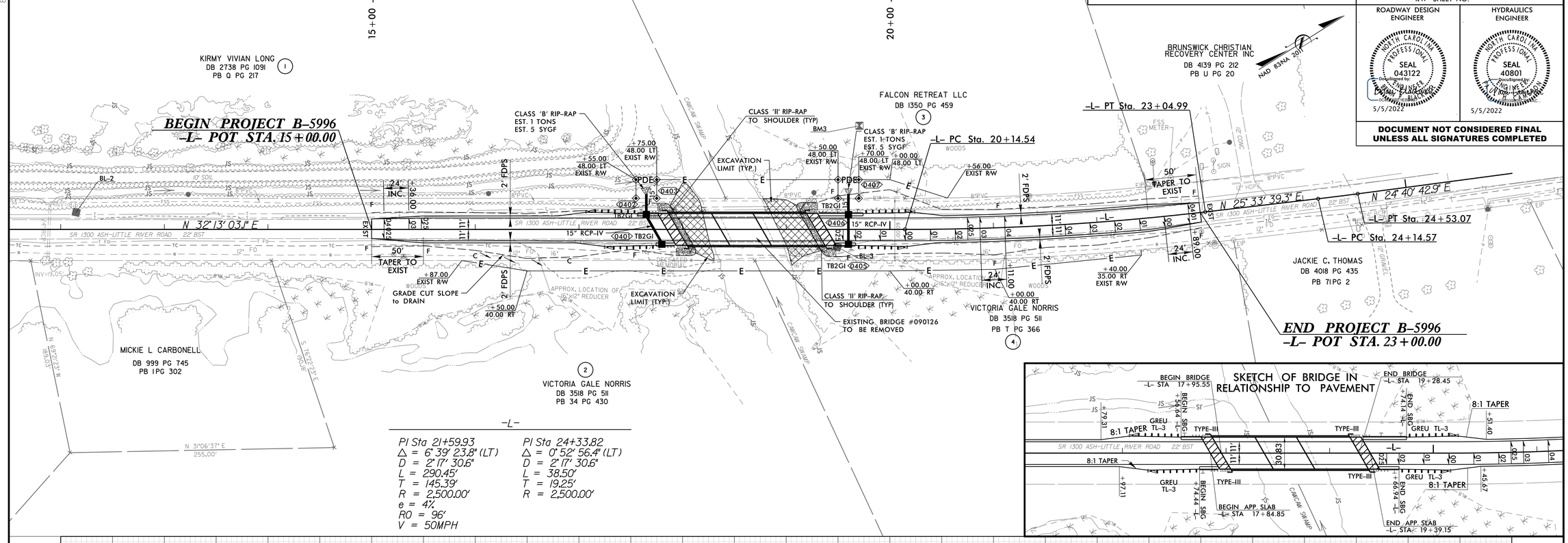

-L-

PI Sta 21+59.93
Δ = 6° 39' 23.8" (LT)
D = 2° 17' 30.6"
L = 290.45'
T = 145.39'
R = 2,500.00'
e = 4%
RO = 96'
V = 50MPH

PI Sta 24+33.82
Δ = 0° 52' 56.4" (LT)
D = 2° 17' 30.6"
L = 38.50'
T = 19.25'
R = 2,500.00'

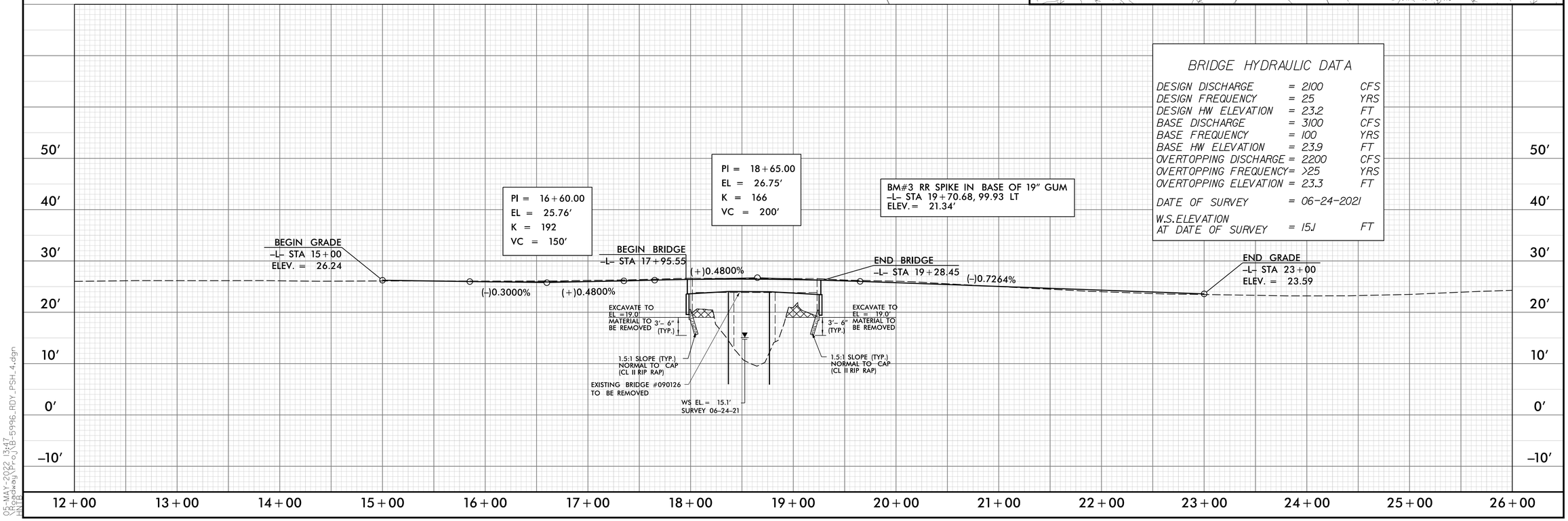

BRIDGE HYDRAULIC DATA

DESIGN DISCHARGE	= 2100	CFS
DESIGN FREQUENCY	= 25	YRS
DESIGN HW ELEVATION	= 23.2	FT
BASE DISCHARGE	= 3100	CFS
BASE FREQUENCY	= 100	YRS
BASE HW ELEVATION	= 23.9	FT
OVERTOPPING DISCHARGE	= 2200	CFS
OVERTOPPING FREQUENCY	= >25	YRS
OVERTOPPING ELEVATION	= 23.3	FT
DATE OF SURVEY	= 06-24-2021	
W.S.ELEVATION AT DATE OF SURVEY	= 15.1	FT

05-MAY-2022 13:47
HNTB Drawing: P:\B-5996_RDY_PSH_4.dgn

STATE	STATE PROJECT REFERENCE NO.	SHEET NO.	TOTAL SHEETS
N.C.	B-5996	RW01	5

STATE OF NORTH CAROLINA
DIVISION OF HIGHWAYS

SURVEY CONTROL, EXISTING CENTERLINES, RIGHT OF WAY, EASEMENTS AND PROPERTY TIES

BRUNSWICK COUNTY

NC GRID
NAD 83 NA 2011

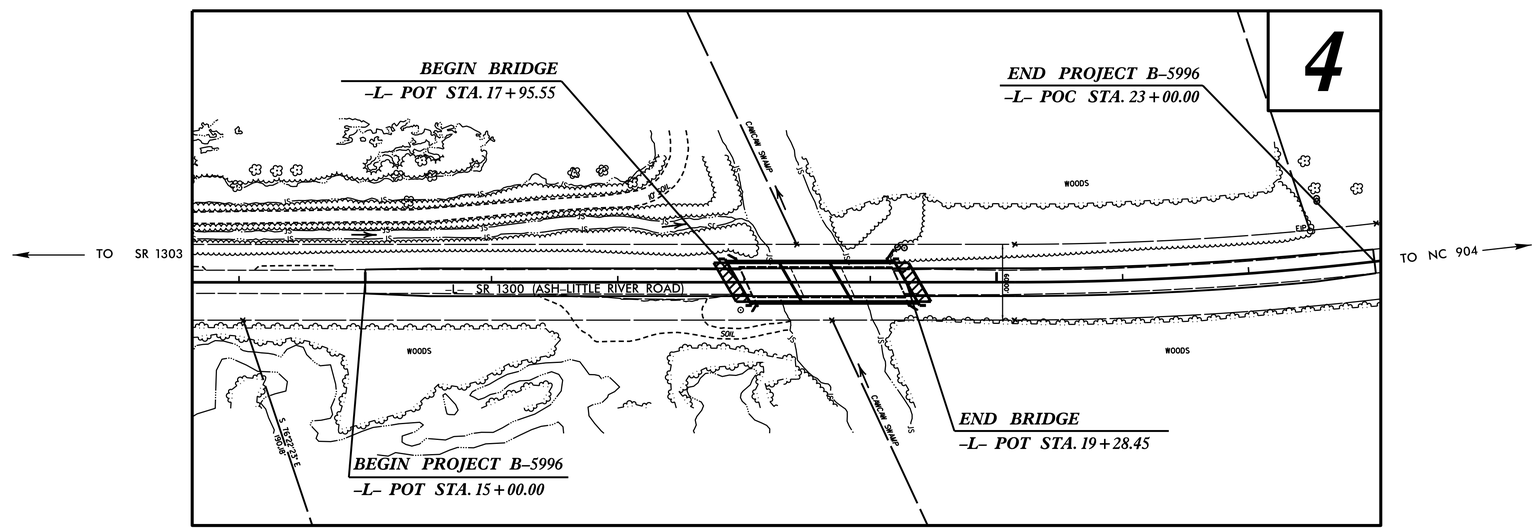

TIP PROJECT: B-5996

09/08/99

13-APR-2022 12:18
S:\Units\Div03\Projects\BRIDGE\Brunswick\B5996_0126\Working\ControlSheets\B5996_ls_rw01.dgn
mjduval AT LS-299896

GRAPHIC SCALE FOR RW04 SHEET

50 25 0 50 100
PLANS

DATUM DESCRIPTION

THE LOCALIZED COORDINATE SYSTEM DEVELOPED FOR THIS PROJECT
IS BASED ON THE STATE PLANE COORDINATES ESTABLISHED BY
NCGS FOR MONUMENT "B5996-2"
WITH NAD 83/NA 2011 STATE PLANE GRID COORDINATES OF
NORTHING: 68126.7761(ft) EASTING: 2117486.6935(ft)
ELEVATION: 27.482(ft)
THE AVERAGE COMBINED GRID FACTOR USED ON THIS PROJECT
(GROUND TO GRID) IS: 1.0001358984
THE N.C. LAMBERT GRID BEARING AND
LOCALIZED HORIZONTAL GROUND DISTANCE FROM
"B5996-2" TO -L- STATION 10+00.00 IS
N 13-56'35.07" E 1,042.10(ft)
ALL LINEAR DIMENSIONS ARE LOCALIZED HORIZONTAL DISTANCES
VERTICAL DATUM USED IS NAVD 88

Prepared in the Office of:

DIVISION 3
LOCATION AND SURVEY'S UNIT
5310 BARBADOS BLVD, SUITE 102
CASTLE HAYNE, NORTH CAROLINA 28429

2018 STANDARD SPECIFICATIONS

RIGHT OF WAY DATE:	*LETTING DATE:*
JANUARY 20, 2022	*JANUARY 16, 2022*

PROFESSIONAL LAND SURVEYOR

NORTH CAROLINA PROFESSIONAL SEAL L-4526 LAND SURVEYOR CHRISTOPHER J. SAWYER

DocuSigned by:
04/13/2022
SIGNATURE: *Date:*

STATE OF NORTH CAROLINA DEPARTMENT OF TRANSPORTATION

SURVEY CONTROL SHEET

W/ EXISTING CENTERLINE ALIGNMENTS PRIOR TO CONSTRUCTION

PROJECT REFERENCE NO.	SHEET NO.
B-5996	RW02C-1

Location and Surveys

DIVISION 3
LOCATION AND SURVEYS UNIT
5310 BARBADOS BLVD. SUITE 102
CASTLE HAYNE, NORTH CAROLINA 28429

PROJECT SURVEYOR

NORTH CAROLINA PROFESSIONAL SEAL L-4526 LAND SURVEYOR CHRISTOPHER J. SAWYER

DOCUMENT NOT CONSIDERED FINAL UNLESS ALL SIGNATURES COMPLETED

NC GRID NAD 83 NA 2011

I, Christopher J. Sawyer, PLS, certify that the Project Control was performed under my supervision from an actual GPS survey made under my supervision and the following information was used to perform the survey:

Class of survey: ***AA***
Type of GPS field procedure: RTN
Dates of survey: February 2021
Datum/Epoch: NAVD 88
Published/Fixed-control use: N/A
Localized around: B5996-2
Northing: 68126.7761
Easting: 2117486.6935
Combined grid factor: 1.0001358984
Geoid model: G12BNC
Units: US Survey Feet

I also certify that the Baseline Control for this project was completed under my direct and responsible charge from an actual survey made under my supervision; that all horizontal closures had a minimum ratio of precision of 1:20,000 (Class AA) and Vertical accuracy to Class A. Field work was performed February 2021 and all coordinates are based on NAD 83/2011 and all elevations are based on NAVD 88; that this survey was performed to meet the requirements of 21NCAC 56.1600 as applicable.

This 13TH day of APRIL, 2022.

DocuSigned by:
9700CB2E1D21467...

Professional Land Surveyor L-4526

BL POINT	DESC.	NORTH	EAST	ELEVATION
B5996-1	GPS CAP AND REBAR	66973.3741	2117830.7782	34.30
B5996-2	GPS CAP AND REBAR	68126.7761	2117486.6935	27.48
BL-1	TRV CAP AND REBAR	68719.7430	2117469.8230	24.99
BL-2	TRV CAP AND REBAR	69328.7680	2117838.4440	24.87
BL-3	TRV CAP AND REBAR	69932.1660	2118258.1700	25.10
BL-4	TRV CAP AND REBAR	70571.9500	2118584.8870	23.67
B5996-3	GPS CAP AND REBAR	71217.0260	2118881.9013	26.42
B5996-4	GPS CAP AND REBAR	72326.9890	2119278.6471	26.33

****
BM3 ELEVATION = 21.34
N 70013 E 2118171
RRS IN 19" GUM
****

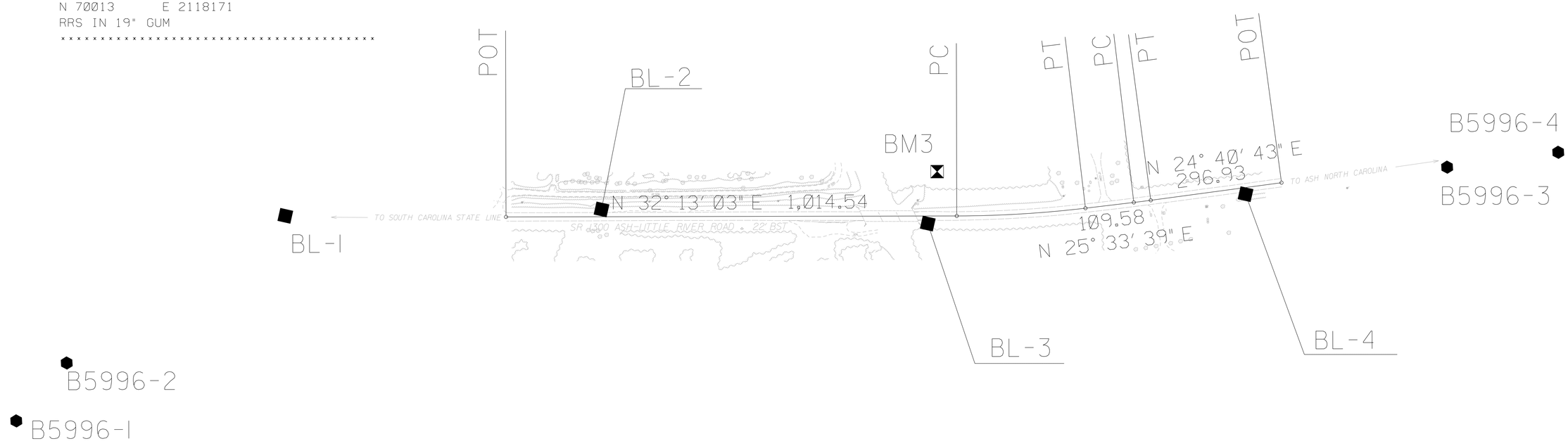

EL

POINT	N	E	BEARING	DIST	DELTA	D	L	T	R
POT	69138.170	2117737.795							
LINE			N 32°13'03.1" E	1014.54					
PC	69996.503	2118278.683							
CURVE			N 28°53'21.2" E	290.29	06°39'23.8"(LT)	02°17'30.6"	290.45	145.39	2500.00
PT	70250.664	2118418.925							
LINE			N 25°33'39.3" E	109.58					
PC	70349.520	2118466.206							
CURVE			N 25°07'11.1" E	38.50	00°52'56.4"(LT)	02°17'30.6"	38.50	19.25	2500.00
PT	70384.378	2118482.550							
LINE			N 24°40'42.9" E	296.93					
POT	70654.187	2118606.526							

NOTES:

1. PROJECT CONTROL WAS ESTABLISHED USING GNSS, THE GLOBAL NAVIGATION SATELLITE SYSTEM.

2. THE SURVEY CONTROL DATA FOR THIS PROJECT HAS BEEN COMPILED FROM VARIOUS SOURCES. IF FURTHER INFORMATION REGARDING PROJECT CONTROL IS NEEDED, PLEASE CONTACT THE LOCATION AND SURVEYS UNIT.

6/2/99

13-APR-2022 13:09
S:\Units\Div03\Projects\BRIDGE\Brunswick\B5996_0126\Working\Control Sheets\b5996_ls_rw02c-1.dgn
mjduval AT LS-299896

PROPOSED ALIGNMENT CONTROL SHEET

PROJECT REFERENCE NO.	SHEET NO.
B-5996	RW02D-1

Location and Surveys

DIVISION 3
LOCATION AND SURVEY'S UNIT
5310 BARBADOS BLVD, SUITE 102
CASTLE HAYNE, NORTH CAROLINA 28429

PROJECT SURVEYOR

NORTH CAROLINA PROFESSIONAL SEAL L-4526 LAND SURVEYOR CHRISTOPHER J. SAWYER

DOCUMENT NOT CONSIDERED FINAL UNLESS ALL SIGNATURES COMPLETED

I, Christopher J. Sawyer, PLS, certify that the data compiled came from available surveys/mapping performed by others and provided to me by NCDOT and do not certify to the accuracy or quality of the individual data sources.

This 13TH day of APRIL, 2022.

DocuSigned by:
Christopher J. Sawyer
5700C9C9E1D24A7...

Professional Land Surveyor L-4526

TYPE	STATION	L NORTH	EAST
POT	10+00.00	69138.1698	2117737.7952
PC	20+14.54	69996.5032	2118278.6833
PT	23+04.99	70250.6643	2118418.9254
PC	24+14.57	70349.5204	2118466.2064
PT	24+53.07	70384.3784	2118482.5498
POT	27+50.00	70654.1873	2118606.5258

NOTES:

1. PROJECT CONTROL WAS ESTABLISHED USING GNSS, THE GLOBAL NAVIGATION SATELLITE SYSTEM.

2. THE PROPOSED ALIGNMENT CONTROL DATA FOR THIS PROJECT HAS BEEN COMPILED FROM VARIOUS SOURCES. IF FURTHER INFORMATION REGARDING PROJECT CONTROL IS NEEDED, PLEASE CONTACT THE LOCATION AND SURVEYS UNIT.

REVISIONS

6/2/99

13-APR-2022 13:13
S:\Units\Div03\Projects\BRIDGE\Brunswick\B5996_0126\Working\Control Sheets\b5996_ls_rw02d-1.dgn
mduval A1_LS_24x36

RIGHT OF WAY CONTROL SHEET

PROJECT REFERENCE NO.	SHEET NO.
B-5996	RW03E-1

Location and Surveys

DIVISION 3
LOCATION AND SURVEY'S UNIT
5310 BARBADOS BLVD, SUITE 102
CASTLE HAYNE, NORTH CAROLINA 28429

PROJECT SURVEYOR

NORTH CAROLINA PROFESSIONAL SEAL L-4526 LAND SURVEYOR CHRISTOPHER J. SAWYER

DOCUMENT NOT CONSIDERED FINAL UNLESS ALL SIGNATURES COMPLETED

ROW MARKER IRON PIN AND CAP-E(EXISTING ROW)

ALIGN	STATION	OFFSET	NORTH	EAST
L	15+00.00	30.00	69545.1908	2118029.7436
L	15+00.00	-30.00	69577.1789	2117978.9818
L	20+14.54	-30.00	70012.4973	2118253.3024
L	20+14.54	30.00	69980.5092	2118304.0642
L	23+04.99	-30.00	70263.6084	2118391.8616
L	23+04.99	30.00	70237.7202	2118445.9892
L	24+14.57	-30.00	70362.4645	2118439.1426
L	24+14.57	30.00	70336.5763	2118493.2702

I , Christopher J. Sawyer , certify that the right of way and permanent easement monumentation for this project shown herein was completed under my direct and responsible charge from an actual survey made under my supervision; that all horizontal closures had a minimum ratio of precision of 1:10,000 (Class A). Field work was performed March 2, 2022, and all coordinates are based on NAD83/2011; That this survey was performed to meet the requirements of 21NCAC 56.1600 as applicable.

This 13TH day of APRIL, 2022.

DocuSigned by:
Christopher J. Sawyer
B7D0CA8BC5D1485...

Professional Land Surveyor L-4526

ROW MARKER PERMANENT EASEMENT

ALIGN	STATION	OFFSET	NORTH	EAST
L	17+55.00	-48.00	69802.5130	2118099.7027
L	17+55.00	-30.00	69792.9166	2118114.9313
L	17+75.00	-48.00	69819.4336	2118110.3654
L	17+75.00	-30.00	69809.8372	2118125.5940
L	19+50.00	-48.00	69967.4889	2118203.6640
L	19+50.00	-30.00	69957.8925	2118218.8926
L	19+70.00	-48.00	69984.4095	2118214.3267
L	19+70.00	-30.00	69974.8131	2118229.5553

NOTES:

1. IF FURTHER INFORMATION REGARDING PROJECT CONTROL IS NEEDED PLEASE CONTACT THE LOCATION AND SURVEYS UNIT.
2. PROJECT CONTROL WAS ESTABLISHED USING GNSS, THE GLOBAL NAVIGATION SATELLITE SYSTEM.
3. RIGHT OF WAY MONUMENTATION ESTABLISHED MARCH 2, 2022 .

REVISIONS

6/2/99

13-APR-2022 /35
S:\Units\Drawings\Projects\BRIDGE\Brunswick\B5996_0126\Working\Control Sheets\b5996_ls_rw03e-1.dgn
mduval AT LS-B5996

PROJECT REFERENCE NO.	SHEET NO.
B-5996	RW04

Location and Surveys

DIVISION 3
LOCATION AND SURVEY'S UNIT
5310 BARBADOS BLVD, SUITE 102
CASTLE HAYNE, NORTH CAROLINA 28429

PROJECT SURVEYOR

NORTH CAROLINA PROFESSIONAL SEAL L-4526 LAND SURVEYOR CHRISTOPHER J. SAWYER

DOCUMENT NOT CONSIDERED FINAL UNLESS ALL SIGNATURES COMPLETED

I , Christopher J. Sawyer , certify that the right of way and permanent easement monumentation for this project shown herein was completed under my direct and responsible charge from an actual survey made under my supervision; that all horizontal closures had a minimum ratio of precision of 1:10,000 (Class A). Field work was performed from March 2, 2022 and all coordinates are based on NAD83/2011; That this survey was performed to meet the requirements of 21NCAC 56.1600 as applicable.

This 13TH day of APRIL, 2022.

DocuSigned by:
9700CB2E1D21467...

Professional Land Surveyor L-4526

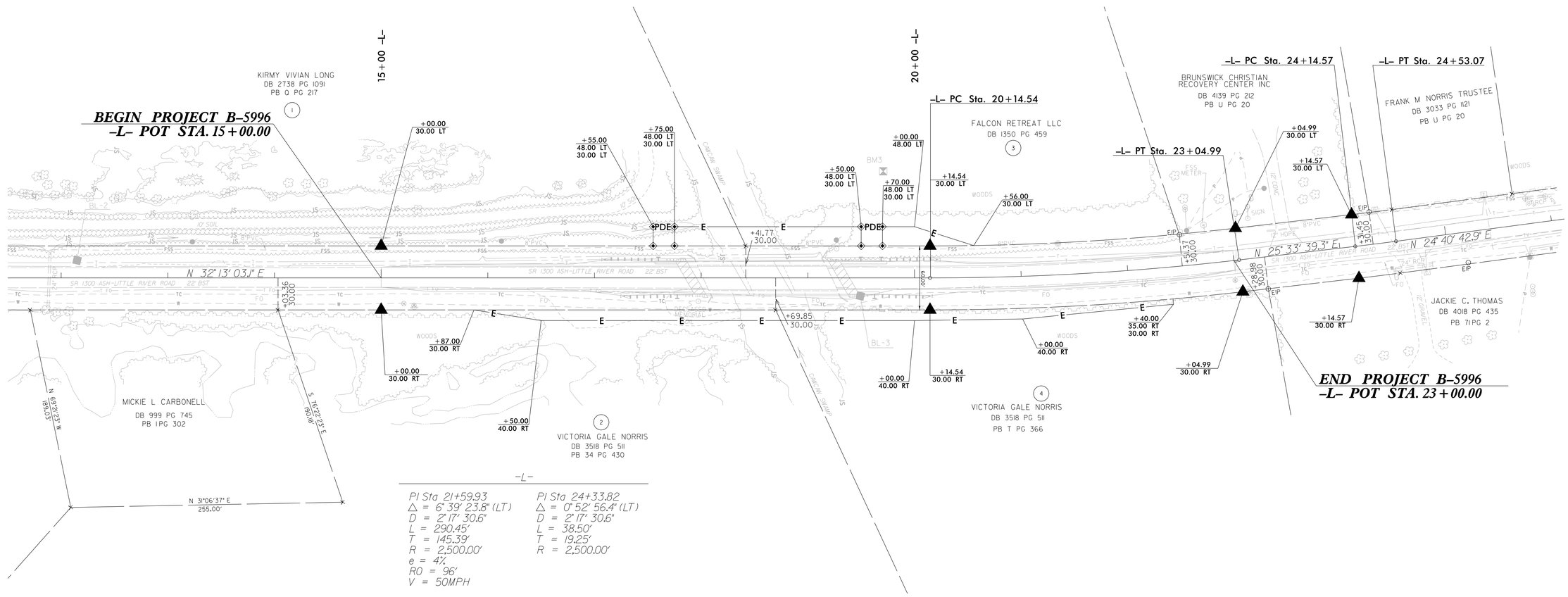

NOTES:

1. IF FURTHER INFORMATION REGARDING PROJECT CONTROL IS NEEDED PLEASE CONTACT THE LOCATION AND SURVEYS UNIT.
2. PROJECT CONTROL WAS ESTABLISHED USING GNSS, THE GLOBAL NAVIGATION SATELLITE SYSTEM.
3. RIGHT OF WAY MONUMENTATION ESTABLISHED MARCH 2, 2022.

REVISIONS

6/2/99

13-APR-2022 15:19
S:\Units\Div03\Projects\BRIDGE\Brunswick\B5996_0126\Working\Control Sheets\b5996_ls_rw04.dgn
mduval AT LS-29896

DocuSign Envelope ID: EBBFC57F-067B-4D06-91A3-F836BF3D2C1E

STATE OF NORTH CAROLINA
DIVISION OF HIGHWAYS

TRANSPORTATION MANAGEMENT PLAN

BRUNSWICK COUNTY

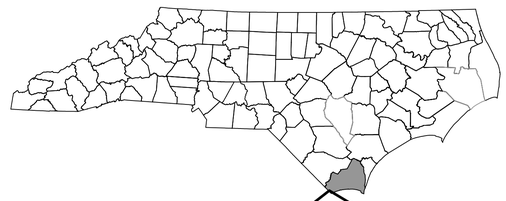

VICINITY MAP

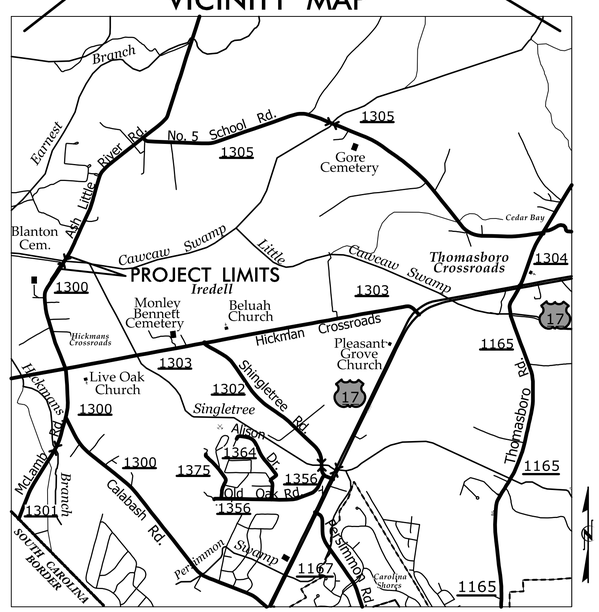

LOCATION: REPLACE BRIDGE NO. 126 OVER CAWCAW SWAMP ON SR 1300 (ASH LITTLE RIVER RD.)

PLANS PREPARED BY: HNTB	*NCDOT CONTACTS:*	
H. SHYU, P.E. *PROJECT ENGINEER*	JESSI LEONARD, P.E. *DIVISION TRAFFIC ENGINEER*	STATE OF NORTH CAROLINA · DEPARTMENT OF TRANSPORTATION ·
J. S. ISZCZYSZYN, P.E. *PROJECT DESIGN ENGINEER*		

INDEX OF SHEETS

SHEET NO.	TITLE
TMP-1	TITLE SHEET, VICINITY MAP, INDEX OF SHEETS AND LIST OF APPLICABLE ROADWAY STANDARD DRAWINGS, LEGEND
TMP-2	GENERAL NOTES, PHASING AND DETOUR
TMP-2A	TEMPORARY SIGN DESIGN

ROADWAY STANDARD DRAWINGS

THE FOLLOWING ROADWAY STANDARDS AS SHOWN IN "ROADWAY STANDARD DRAWINGS" CONTRACT STANDARDS AND DEVELOPMENT UNIT - N.C. DEPARTMENT OF TRANSPORTATION - RALEIGH, N.C. DATED JAN 2018 ARE APPLICABLE TO THIS PROJECT AND BY REFERENCE HEREBY ARE CONSIDERED A PART OF THESE PLANS:

STD. NO.	TITLE
1101.03	TEMPORARY ROAD CLOSURES
1101.11	TRAFFIC CONTROL DESIGN TABLES
1110.01	STATIONARY WORK ZONE SIGNS
1145.01	BARRICADES
1205.01	PAVEMENT MARKINGS - LINE TYPES & OFFSETS
1205.02	PAVEMENT MARKINGS - 2 LANE & MULTILANE ROADWAYS
1205.12	PAVEMENT MARKINGS - BRIDGES
1250.01	RAISED PAVEMENT MARKERS - INSTALLATION SPACING
1251.01	RAISED PAVEMENT MARKERS - PERMANENT AND TEMPORARY

LEGEND

GENERAL

NORTH ARROW

TRAFFIC CONTROL DEVICES

BARRICADE (TYPE III)

TEMPORARY SIGNING

STATIONARY SIGN

DOCUMENT NOT CONSIDERED FINAL UNLESS ALL SIGNATURES COMPLETED

HNTB

HNTB NORTH CAROLINA, P.C.
343 E. Six Forks Road, Ste 200
Raleigh, North Carolina 27609
NC License No: C-1554

APPROVED: DocuSigned by: Helen Shyu 0F15975A95E44EF...

DATE: 5/9/2022

SEAL

NORTH CAROLINA PROFESSIONAL SEAL 042517 ENGINEER HELEN SHYU

SHEET NO.
TMP-1

B-5996

TIP PROJECT:

2:25:18 PM
...\TCP\B-5996_TC_TCP_01_TITLE.dgn
5/9/2022

DocuSign Envelope ID: EBBFC57F-067B-4D06-91A3-F836BF3D2C1E

PROJ. REFERENCE NO.	SHEET NO.
B-5996	TMP-2

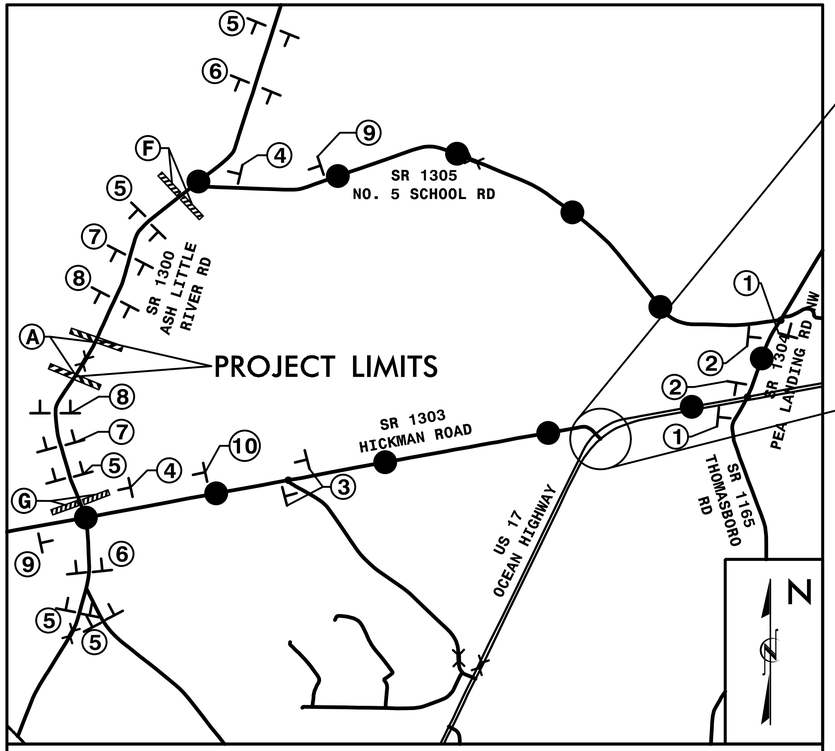

VICINITY MAP — *OFFSITE DETOUR*

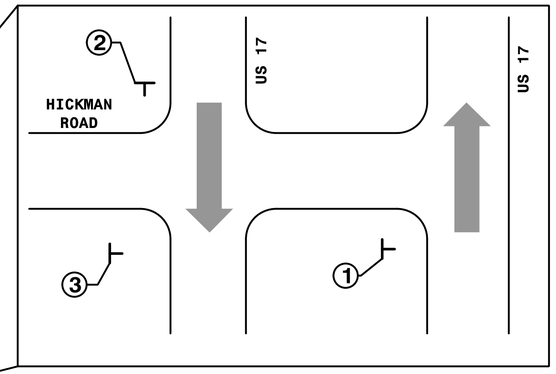

GENERAL NOTES

CHANGES MAY BE REQUIRED WHEN PHYSICAL DIMENSIONS IN THE DETAIL DRAWINGS, STANDARD DETAILS AND ROADWAY DETAILS ARE NOT ATTAINABLE TO MEET FIELD CONDITIONS OR RESULT IN THE DUPLICATE OR UNDESIRED OVERLAPPING OF DEVICES. MODIFICATIONS MAY INCLUDE: MOVING, SUPPLEMENTING, COVERING, OR REMOVAL OF DEVICES AS DIRECTED BY THE ENGINEER.

THE FOLLOWING GENERAL NOTES APPLY AT ALL THE TIMES FOR THE DURATION OF THE CONSTRUCTION PROJECT EXCEPT WHEN OTHERWISE NOTED IN THE PLAN OR DIRECTED BY THE ENGINEER.

LANE AND SHOULDER CLOSURE REQUIREMENTS

A) REMOVE LANE CLOSURE DEVICES FROM THE LANE WHEN WORK IS NOT BEING PERFORMED BEHIND THE LANE CLOSURE OR WHEN A LANE CLOSURE IS NO LONGER NEEDED OR AS DIRECTED BY THE ENGINEER.

TRAFFIC PATTERN ALTERATIONS

B) NOTIFY THE ENGINEER THIRTY (30) CALENDAR DAYS PRIOR TO ANY TRAFFIC PATTERN ALTERATION.

SIGNING

C) PROVIDE SIGNING AND DEVICES REQUIRED TO CLOSE THE ROAD ACCORDING TO THE ROADWAY STANDARD DRAWINGS AND TRAFFIC CONTROL PLANS.

PROVIDE SIGNING REQUIRED FOR THE OFF-SITE DETOUR ROUTE AS SHOWN ON THIS SHEET.

D) COVER OR REMOVE ALL SIGNS AND DEVICES REQUIRED TO CLOSE THE ROAD WHEN ROAD CLOSURE IS NOT IN OPERATION.

COVER OR REMOVE ALL SIGNS REQUIRED FOR THE OFF-SITE DETOUR WHEN THE DETOUR IS NOT IN OPERATION.

E) ENSURE ALL NECESSARY SIGNING IS IN PLACE PRIOR TO ALTERING ANY TRAFFIC PATTERN.

TRAFFIC CONTROL DEVICES

F) PLACE TYPE III BARRICADES, WITH "ROAD CLOSED" SIGN R11-2 ATTACHED, OF SUFFICIENT LENGTH TO CLOSE ENTIRE ROADWAY.

PAVEMENT MARKING AND MARKERS

G) INSTALL PAVEMENT MARKINGS ON THE FINAL SURFACE AS FOLLOWS:

ROAD NAME	MARKING	MARKERS
(SR 1300) ASH LITTLE RIVER RD	THERMO	RAISED

H) TIE PROPOSED PAVEMENT MARKING LINES TO EXISTING PAVEMENT MARKING LINES.

I) REMOVE/REPLACE ANY CONFLICTING/DAMAGED PAVEMENT MARKINGS.

J) PASSING ZONE WILL BE DETERMINED IN THE FIELD AND MUST BE APPROVED BY THE ENGINEER.

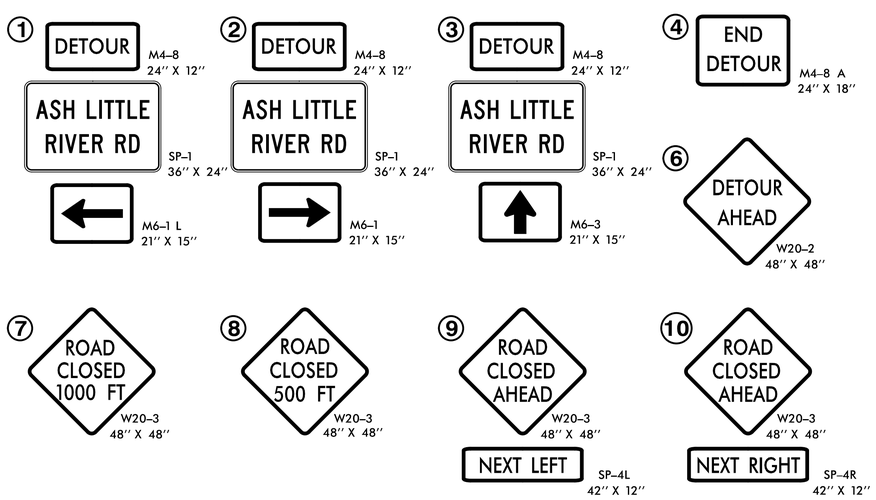

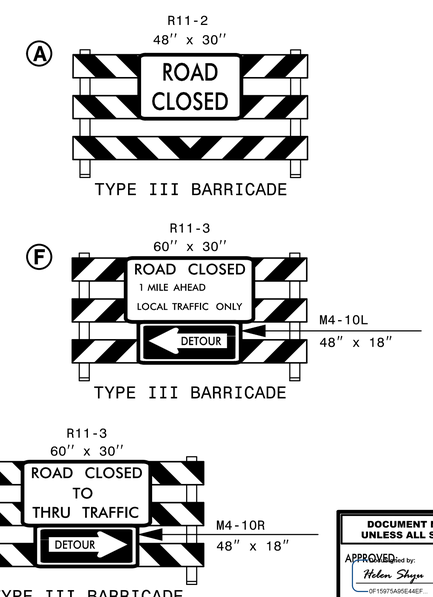

PHASING

PHASE I

PRIOR TO ANY CONSTRUCTION OPERATIONS, PLACE AND COVER OFF-SITE DETOUR SIGNS AS SHOWN ON TMP-2 AND IN ACCORDANCE WITH RSD 1101.03 (SHEETS 1 OF 9).

PHASE II

UNCOVER DETOUR SIGNS, CLOSE -L- (SR 1300/ ASH LITTLE RIVER RD) TO TRAFFIC AND CONSTRUCT PROPOSED BRIDGE AND ROADWAY UP TO AND INCLUDING THE FINAL LAYER OF SURFACE COURSE. CONTRACTOR SHALL MAINTAIN ACCESS TO BOAT RAMP.

PHASE III

UPON COMPLETION OF BRIDGE AND ROADWAY, PLACE FINAL PAVEMENT MARKINGS AND MARKERS IN ACCORDANCE WITH RSD 1205.01, 1205.02, 1205.12, 1250.01 AND 1251.01. REMOVE BARRICADES AND DETOUR SIGNS AND OPEN -L- (SR 1300 /ASH LITTLE RIVER RD) TO TRAFFIC.

HNTB
HNTB NORTH CAROLINA, P.C.
343 E. Six Forks Road, Suite 200
Raleigh, North Carolina 27609
NC License No: C-1554

DOCUMENT NOT CONSIDERED FINAL UNLESS ALL SIGNATURES COMPLETED

APPROVED Helen Shyu
DocuSigned by:
DF15975A95E4AEF...
DATE: 5/9/2022

NORTH CAROLINA PROFESSIONAL SEAL 042517 ENGINEER HELEN SHYU

DIVISION OF HIGHWAYS STATE OF NORTH CAROLINA DEPARTMENT OF TRANSPORTATION WORK ZONE TRAFFIC CONTROL

TRANSPORTATION MANAGEMENT PLAN

GENERAL NOTES, PHASING AND DETOUR

2:25:20 PM
B-5996_TC_TCP_01_detour.dgn
5/9/2022

DocuSign Envelope ID: EBBFC57F-067B-4D06-91A3-F836BF3D2C1E

PROJ. REFERENCE NO.	SHEET NO.
B-5996	TMP-2A

SIGN NUMBER: SP-1
TYPE: D
QUANTITY: 9

SIGN WIDTH: 3'-0"
HEIGHT: 2'-0"
TOTAL AREA: 6.0 Sq.Ft.

BORDER TYPE: RECESSED
RECESS: 0.38"
WIDTH: 0.38"
RADII: 1.5"

NO. Z BARS: N/A
LENGTH: N/A

BACKG COLOR: Fluorescent Orange
COPY COLOR: Black

SYMBOL	X	Y	WID	HT

MAT'L: 0.080" ALUMINUM

DESIGN BY: JAW
CHECKED BY: ADK
PROJECT ID: B-5996
DIV: 03
DATE: May 2022

NOTES:

1. Legend and border shall be direct applied non-reflective sheeting.
2. Background shall be Grade B, fluorescent orange, reflective sheeting.
3. To be mounted with Detour signing.

Spacing Factor is 1 unless specified otherwise

LETTER POSITIONS

Letter spacings are to start of next letter

																											Series/Size Text Length
		A	S	H		L	I	T	T	L	E																C 2000
	3	3.6	3.6	2.8	3.3	3.3	1.4	2.9	3.3	3.3	2.6	3															30
		R	I	V	E	R		R	D																		C 2000
	5.6	3.6	1.4	3.8	3.4	2.8	3.3	3.6	2.8	5.6																	24.8

HNTB NORTH CAROLINA, P.C.
343 E. Six Forks Road, Suite 200
Raleigh, North Carolina 27609
NC License No: C-1554

DOCUMENT NOT CONSIDERED FINAL UNLESS ALL SIGNATURES COMPLETED

APPROVED Signed by:
Helen Shyu
0F15975A95E44EF...
5/9/2022

NORTH CAROLINA PROFESSIONAL SEAL 042517 ENGINEER HELEN SHYU

DIVISION OF HIGHWAYS
STATE OF NORTH CAROLINA
DEPARTMENT OF TRANSPORTATION
WORK ZONE TRAFFIC CONTROL

TRANSPORTATION MANAGEMENT PLAN

TEMPORARY SIGN DESIGN

2:25:31 PM
B-5996_TC_TCP_02A_temp-sign-design.dgn
5/9/2022

TIP PROJECT: B-5996

STATE	STATE PROJECT REFERENCE NO.	SHEET NO.	TOTAL SHEETS
N.C.	B-5996	EC-1	

STATE PROJ. NO.	F.A. PROJ. NO.	DESCRIPTION

STATE OF NORTH CAROLINA
DIVISION OF HIGHWAYS

PLAN FOR PROPOSED
HIGHWAY EROSION CONTROL

BRUNSWICK COUNTY

LOCATION: REPLACE BRIDGE NO. 126 OVER CAWCAW SWAMP ON SR 1300 (ASH–LITTLE RIVER ROAD)

TYPE OF WORK: GRADING, DRAINAGE, PAVING AND STRUCTURE

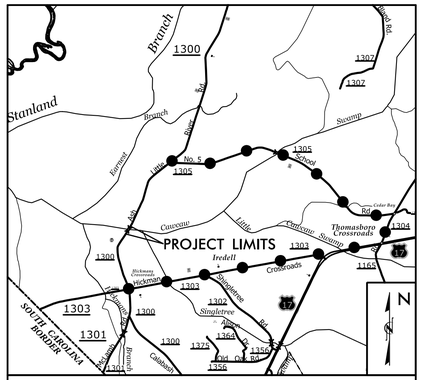

VICINITY MAP — *OFFSITE DETOUR*

NC GRID NAD 83 NA 2011

4

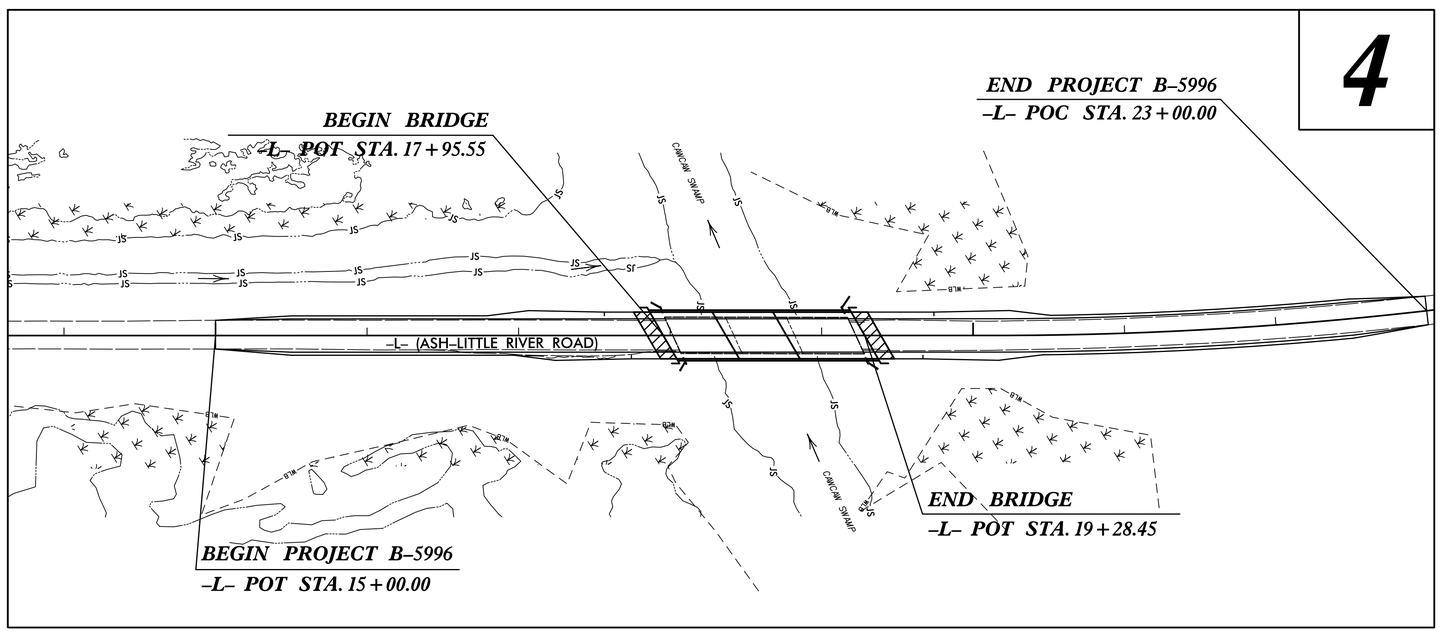

EROSION AND SEDIMENT CONTROL MEASURES

Std. #	Description	Symbol
1630.03	Temporary Silt Ditch	TSD
1630.05	Temporary Diversion	TD
1605.01	Temporary Silt Fence	
1606.01	Special Sediment Control Fence	
1622.01	Temporary Berms and Slope Drains	
1630.02	Silt Basin Type B	
1633.01	Temporary Rock Silt Check Type-A	
	Temporary Rock Silt Check Type-A with Matting and Polyacrylamide (PAM)	
1633.02	Temporary Rock Silt Check Type-B	
	Wattle / Coir Fiber Wattle	SW CFW
	Wattle / Coir Fiber Wattle with Polyacrylamide (PAM)	
1634.01	Temporary Rock Sediment Dam Type-A	
1634.02	Temporary Rock Sediment Dam Type-B	
1635.01	Rock Pipe Inlet Sediment Trap Type-A	
1635.02	Rock Pipe Inlet Sediment Trap Type-B	
1630.04	Stilling Basin	
1630.06	Special Stilling Basin	
	Rock Inlet Sediment Trap:	
1632.01	Type A	A
1632.02	Type B	B
1632.03	Type C	C
	Skimmer Basin	
	Tiered Skimmer Basin	
	Infiltration Basin	

GRAPHIC SCALE

50 25 0 50 100

PLANS

THESE EROSION AND SEDIMENT CONTROL PLANS COMPLY WITH THE APPLICABLE REGULATIONS SET FORTH BY THE NCG-010000 GENERAL CONSTRUCTION PERMIT EFFECTIVE APRIL 1, 2019 AND ISSUED BY THE NORTH CAROLINA DEPARTMENT OF ENVIRONMENTAL QUALITY DIVISION OF WATER RESOURCES.

HNTB

HNTB NORTH CAROLINA, P.C.
343 E. Six Forks Road, Suite 200
Raleigh, North Carolina 27609
NC License No: C-1554

PREPARED IN THE OFFICE OF:

HNTB HNTB NORTH CAROLINA, P.C.
343 E. Six Forks Road, Suite 200
Raleigh, North Carolina 27609
NC License No: C-1554

FOR NCDOT DIVISION 3

Designed by:

NATALIE CHAN, P.E. — ***3444***

NAME — *LEVEL III CERTIFICATION NO.*

Roadway Standard Drawings

The following roadway english standards as appear in "Roadway Standard Drawings"- Roadway Design Unit – N. C. Department of Transportation – Raleigh, N. C., dated January 2018 and the latest revison thereto are applicable to this project and by reference hereby are considered a part of these plans.

1604.01	Railroad Erosion Control Detail	1632.01	Rock Inlet Sediment Trap Type A
1605.01	Temporary Silt Fence	1632.02	Rock Inlet Sediment Trap Type B
1606.01	Special Sediment Control Fence	1632.03	Rock Inlet Sediment Trap Type C
1607.01	Gravel Construction Entrance	1633.01	Temporary Rock Silt Check Type A
1622.01	Temporary Berms and Slope Drains	1633.02	Temporary Rock Silt Check Type B
1630.01	Riser Basin	1634.01	Temporary Rock Sediment Dam Type A
1630.02	Silt Basin Type B	1634.02	Temporary Rock Sediment Dam Type B
1630.03	Temporary Silt Ditch	1635.01	Rock Pipe Inlet Sediment Trap Type A
1630.04	Stilling Basin	1635.02	Rock Pipe Inlet Sediment Trap Type B
1630.05	Temporary Diversion	1640.01	Coir Fiber Baffle
1630.06	Special Stilling Basin	1645.01	Temporary Stream Crossing
1631.01	Matting Installation		

12/14/2021
"N:\Design\B-5996_EC_tsh.dgn"

PROJECT REFERENCE NO.	SHEET NO.
B-5996	EC-2
R/W SHEET NO.	
ROADWAY DESIGN ENGINEER	HYDRAULICS ENGINEER

SILT FENCE COIR FIBER WATTLE BREAK DETAIL

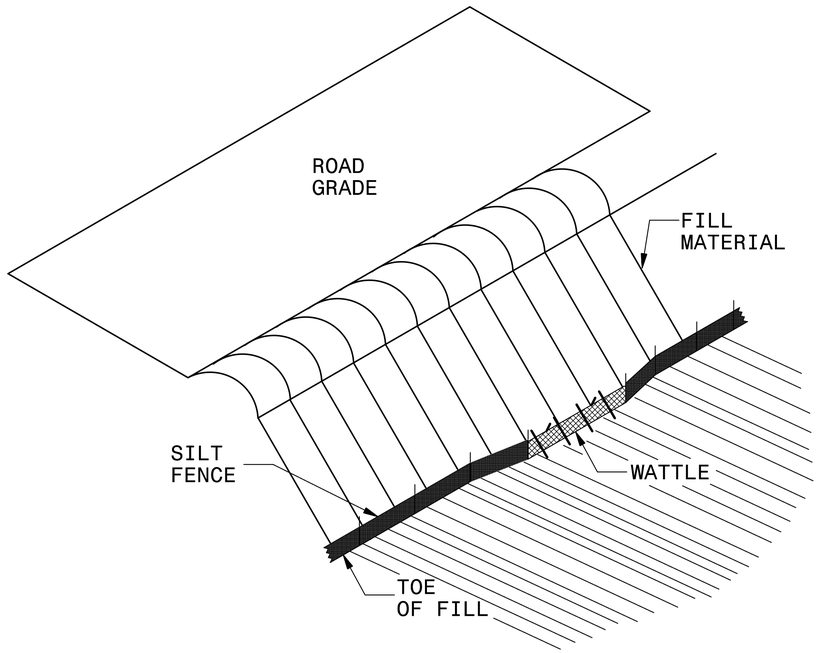

ISOMETRIC VIEW

NOTES:

USE MINIMUM 12 IN. DIAMETER COIR FIBER (COCONUT FIBER) WATTLE AND LENGTH OF 10 FT.

EXCAVATE A 1 TO 2 INCH TRENCH FOR WATTLE TO BE PLACED.

DO NOT PLACE WATTLE ON TOE OF SLOPE.

USE 2 FT. WOODEN STAKES WITH A 2 IN. BY 2 IN. NOMINAL CROSS SECTION.

INSTALL A MINIMUM OF 2 UPSLOPE STAKES AND 4 DOWNSLOPE STAKES AT AN ANGLE TO WEDGE WATTLE TO GROUND.

PROVIDE STAPLES MADE OF 0.125 IN. DIAMETER STEEL WIRE FORMED INTO A U SHAPE NOT LESS THAN 12″ IN LENGTH.

INSTALL STAPLES APPROXIMATELY EVERY 1 LINEAR FOOT ON BOTH SIDES OF WATTLE AND AT EACH END TO SECURE IT TO THE SOIL.

WATTLE INSTALLATION CAN BE ON OUTSIDE OF THE SILT FENCE AS DIRECTED.

INSTALL TEMPORARY SILT FENCE IN ACCORDANCE WITH SECTION 1605 OF THE STANDARD SPECIFICATIONS.

INSET A

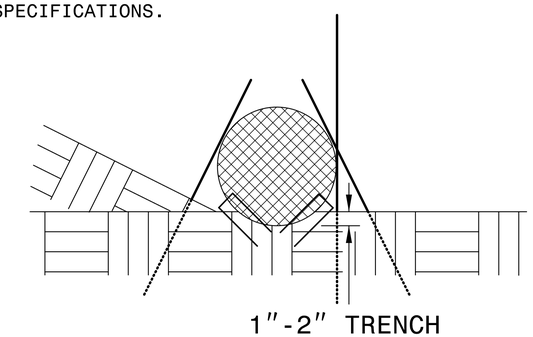

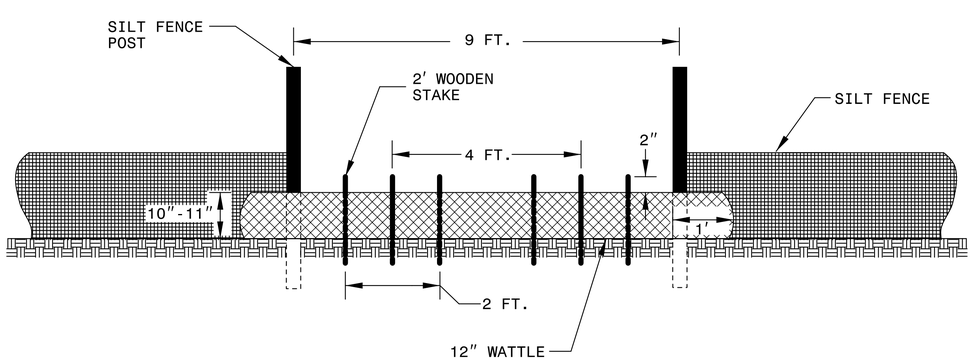

VIEW FROM SLOPE

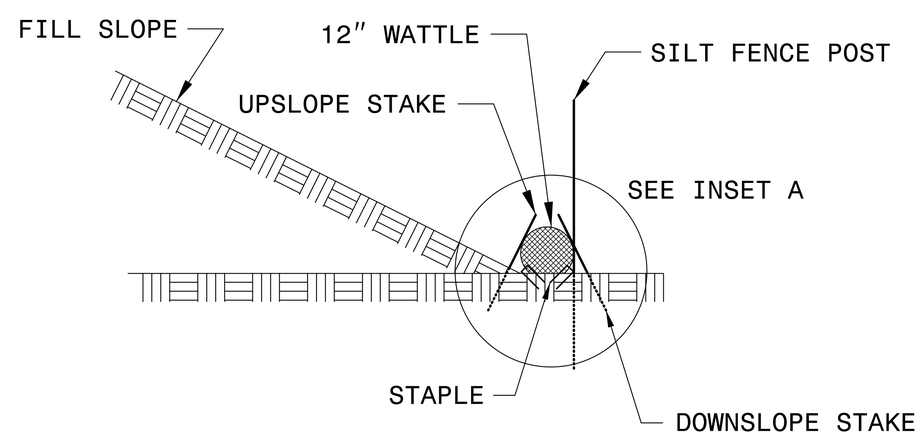

SIDE VIEW

PROJECT REFERENCE NO.	SHEET NO.
B-5996	EC-3
ROADWAY DESIGN ENGINEER	HYDRAULICS ENGINEER

DIVISION OF HIGHWAYS
STATE OF NORTH CAROLINA

SOIL STABILIZATION TIMEFRAMES

SITE DESCRIPTION	STABILIZATION TIME	TIMEFRAME EXCEPTIONS
PERIMETER DIKES, SWALES, DITCHES AND SLOPES	7 DAYS	NONE
HIGH QUALITY WATER (HQW) ZONES	7 DAYS	NONE
SLOPES STEEPER THAN 3:1	7 DAYS	IF SLOPES ARE 10' OR LESS IN LENGTH AND ARE NOT STEEPER THAN 2:1, 14 DAYS ARE ALLOWED.
SLOPES 3:1 OR FLATTER	14 DAYS	7 DAYS FOR SLOPES GREATER THAN 50' IN LENGTH.
ALL OTHER AREAS WITH SLOPES FLATTER THAN 4:1	14 DAYS	NONE, EXCEPT FOR PERIMETERS AND HQW ZONES.

8/17/99

HNTB	HNTB NORTH CAROLINA, P.C. 343 E. Six Forks Road, Suite 200 Raleigh, North Carolina 27609 NC License No: C-1554	PROJECT REFERENCE NO.	SHEET NO.
		B-5996	EC-4/CONST.4
		R/W SHEET NO.	
		ROADWAY DESIGN ENGINEER	HYDRAULICS ENGINEER

NATALIE CHAN, P.E.
EROSION CONTROL
LEVEL III
CERTIFICATION #3444

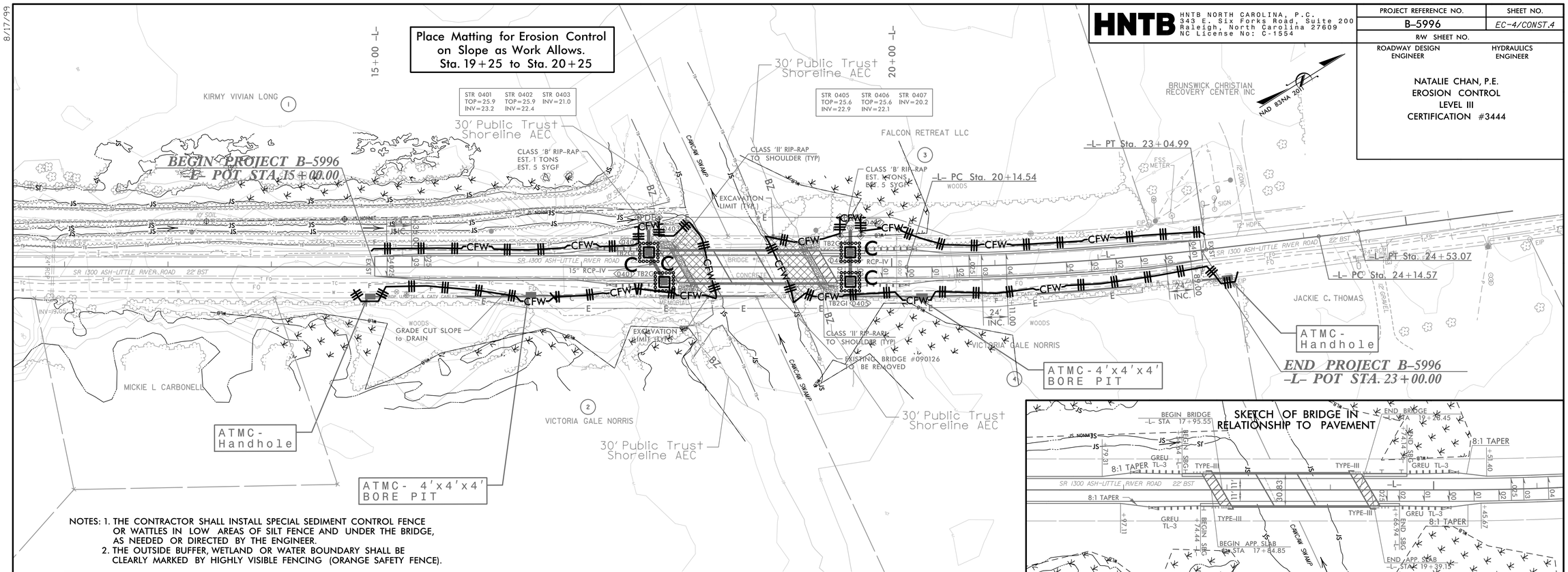

NOTES: 1. THE CONTRACTOR SHALL INSTALL SPECIAL SEDIMENT CONTROL FENCE OR WATTLES IN LOW AREAS OF SILT FENCE AND UNDER THE BRIDGE, AS NEEDED OR DIRECTED BY THE ENGINEER.
2. THE OUTSIDE BUFFER, WETLAND OR WATER BOUNDARY SHALL BE CLEARLY MARKED BY HIGHLY VISIBLE FENCING (ORANGE SAFETY FENCE).

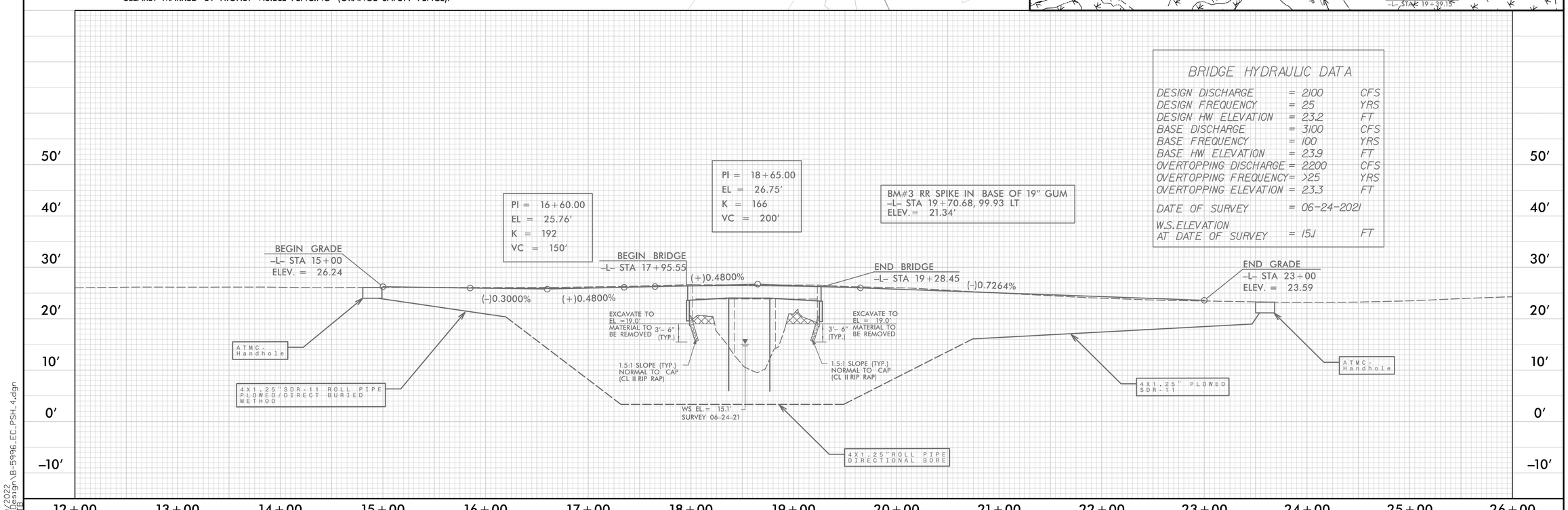

1/19/2022
Design\B-5996_EC_PSH_4.dgn
HNTB

TIP PROJECT: B-5996

T.I.P. NO.	SHEET NO.
B-5996	UO-1

NOTE:
ALL UTILITY WORK SHOWN ON THIS SHEET WILL BE DONE BY OTHERS. NO PAYMENT WILL BE MADE TO THE CONTRACTOR FOR UTILITY WORK SHOWN ON THIS SHEET.

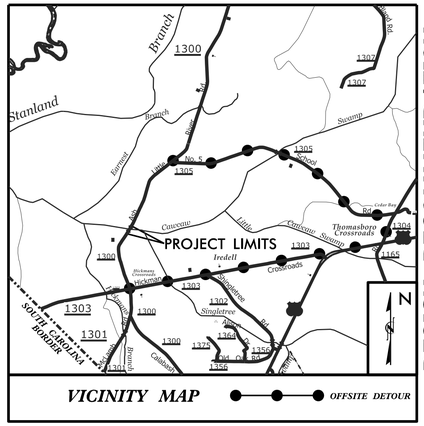

VICINITY MAP — OFFSITE DETOUR

DESIGN RECOMMENDATION PLAN SET

STATE OF NORTH CAROLINA
DIVISION OF HIGHWAYS

UTILITIES BY OTHERS PLANS
BRUNSWICK COUNTY

LOCATION: REPLACE BRIDGE NO. 126 OVER CAWCAW SWAMP ON SR 1300 (ASH-LITTLE RIVER ROAD)

TYPE OF WORK: GRADING, DRAINAGE, PAVING, AND STRUCTURE

NC GRID NAD 83 NA 2011

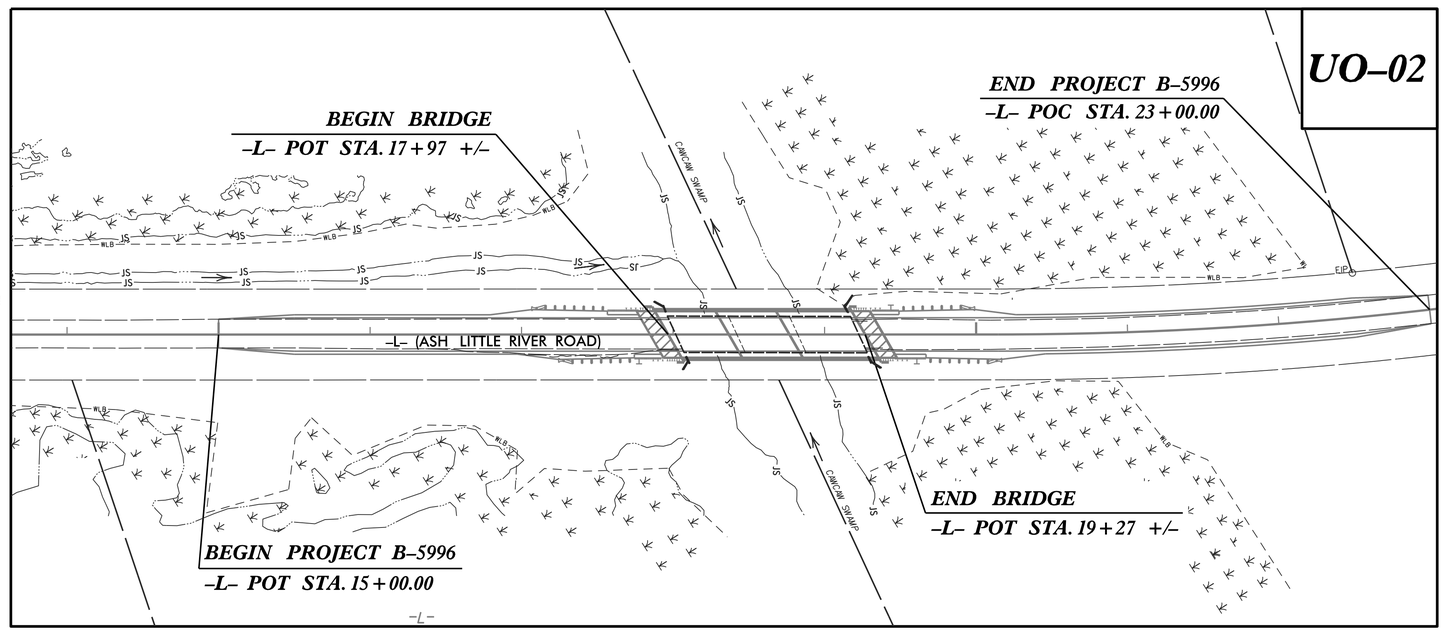

GRAPHIC SCALES

50 25 0 50 100
PLANS

50 25 0 50 100
PROFILE (HORIZONTAL)

10 5 0 10 20
PROFILE (VERTICAL)

INDEX OF SHEETS

SHEET NO.:	DESCRIPTION:
UO-1	TITLE SHEET
UO-2	UBO PLAN SHEETS

UTILITY OWNERS WITH CONFLICTS

(A) POWER - BRUNSWICK EMC
(B) PHONE - ATLANTIC TELEPHONE MEMBERSHIP CORP
(C) CATV - ATLANTIC TELEPHONE MEMBERSHIP CORP

PREPARED IN THE OFFICE OF:

Weston & Sampson℠
WSE of North Carolina, PC
598 East Chatham Street Suite 137
Cary, NC 27511
Phone: 919.297.0220 Fax: 919.297.0221
NC License: C-4847

JIM FORBES — PROJECT UTILITY MANAGER
D. VONDENHUEVEL — PROJECT UTILITY COORDINATOR

DIVISION OF HIGHWAYS
DIVISION 3
5501 Barbados Blvd.
Castle Hayne, NC 28429
PHONE (910) 341-2000
FAX (910) 672-0143

UTILITIES REGIONAL ENGINEER
LONNY A. SLEEPER — UTILITIES ENGINEER
JON GILES — UTILITIES AREA COORDINATOR
UTILITIES COORDINATOR

09/08/99
B-5996 Brunswick BR-126\Utilities\Coordination\UbO\B-5996_UO_tsh.dgn
5/9/2022
C:\Users\vondenhuevel.daniel\OneDrive - WESTON & SAMPSON ENGINEERS, Inc\Downloads\13700
9:28:55 AM

Weston & Sampson
WSE of North Carolina, PC
598 East Chatham Street Suite 137
Phone: 919.297.0220
NC License: C-4847
Cary, NC 27511
Fax: 919.297.0221

PROJECT REFERENCE NO.	SHEET NO.
B-5996	UO-2
THIS SHEET CORRESPONDS TO RDY-04	

UTILITIES BY OTHERS

NOTE:
ALL PROPOSED UTILITY WORK SHOWN ON THIS SHEET WILL BE DONE BY OTHERS. NO PAYMENT WILL BE MADE TO THE CONTRACTOR FOR PROPOSED UTILITY WORK SHOWN ON THIS SHEET.

Sewer - Brunswick County Public Utilities

Water - Brunswick County Public Utilites

Power - Brunswick EMC

Telephone/CATV - Atlantic Telephone Membership Corp

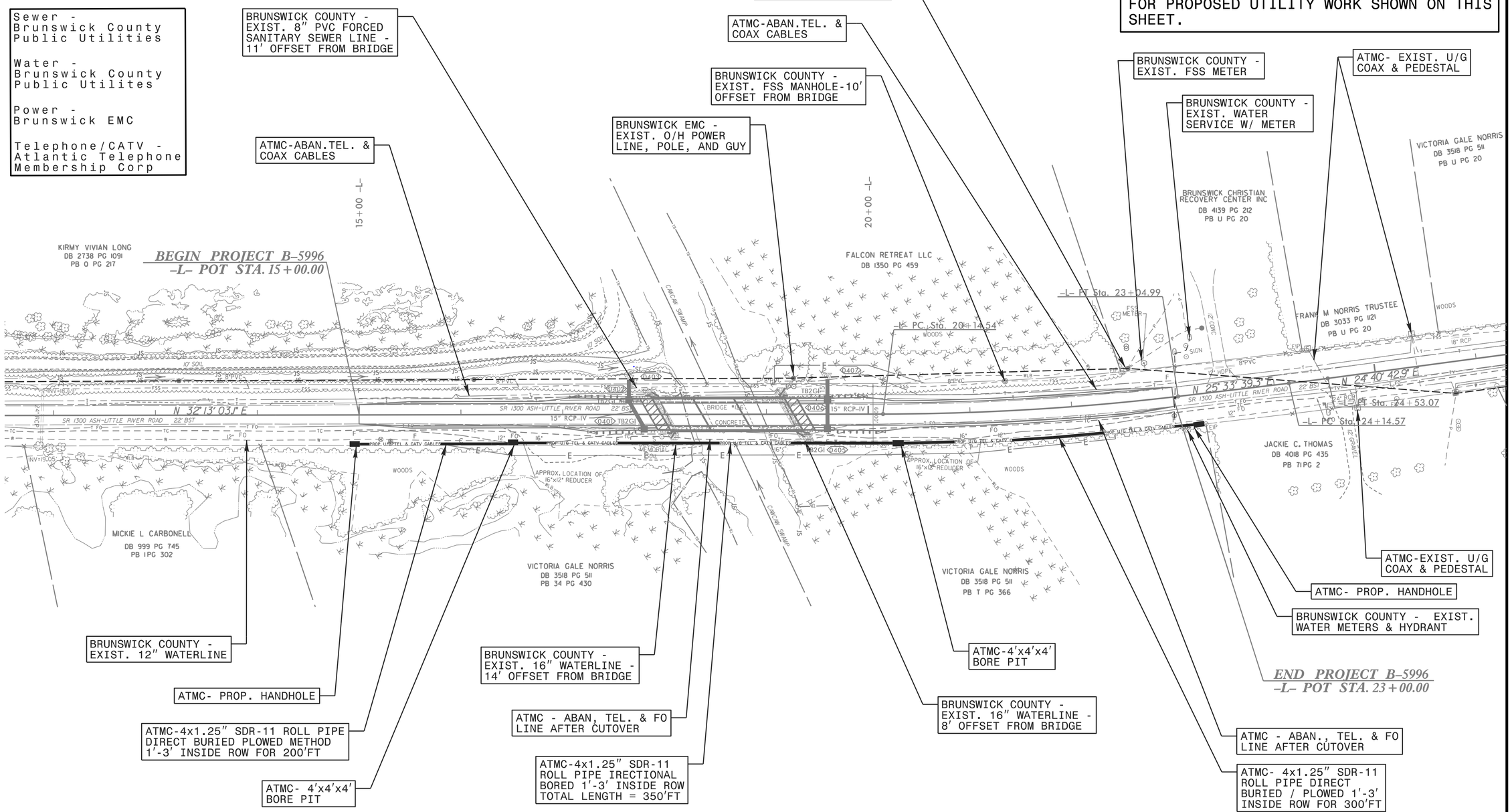

8/17/99
P:\NC_Cary\OldServer\Engineer\JOBS\0696\026\13700 B-5996 Brunswick BR-126\Utilities\Coordination\UbO\B5996_ut_rdy04_uo02_psh.dgn
5/9/2022
10:49:51 AM

Note: Approximate quantities only. Unclassified Excavation, Fine Grading, Removal of Existing Asphalt Pavement, and Clearing and Grubbing, will be paid for at the contract lump sum price for "Grading."

NOTE: EMBANKMENT COLUMN INCLUDES BACKFILL FOR UNDERCUT

CROSS-SECTION SUMMARY

Station L	Uncl. Exc. (cu. yd.)	Embt (cu. yd.)
15+00.00	1	1
15+50.00	15	1
16+00.00	18	0
16+50.00	21	0
17+00.00	26	0
17+50.00	25	1
17+95.55	42	1
Station L	**Uncl. Exc. (cu. yd.)**	**Embt (cu. yd.)**
19+28.45	19	13
19+50.00	23	16
20+00.00	18	37
20+50.00	12	8
21+00.00	1	15
21+50.00	1	12
22+00.00	0	11
22+50.00	0	5
23+00.00	1	2

5/14/99

05-MAY-2022 13:45
oadkoy \CorridorModeling\B5996_RDY_X0.dgn
LNTB

0 2.5 5	PROJ. REFERENCE NO.	SHEET NO.
	B-5996	X-1

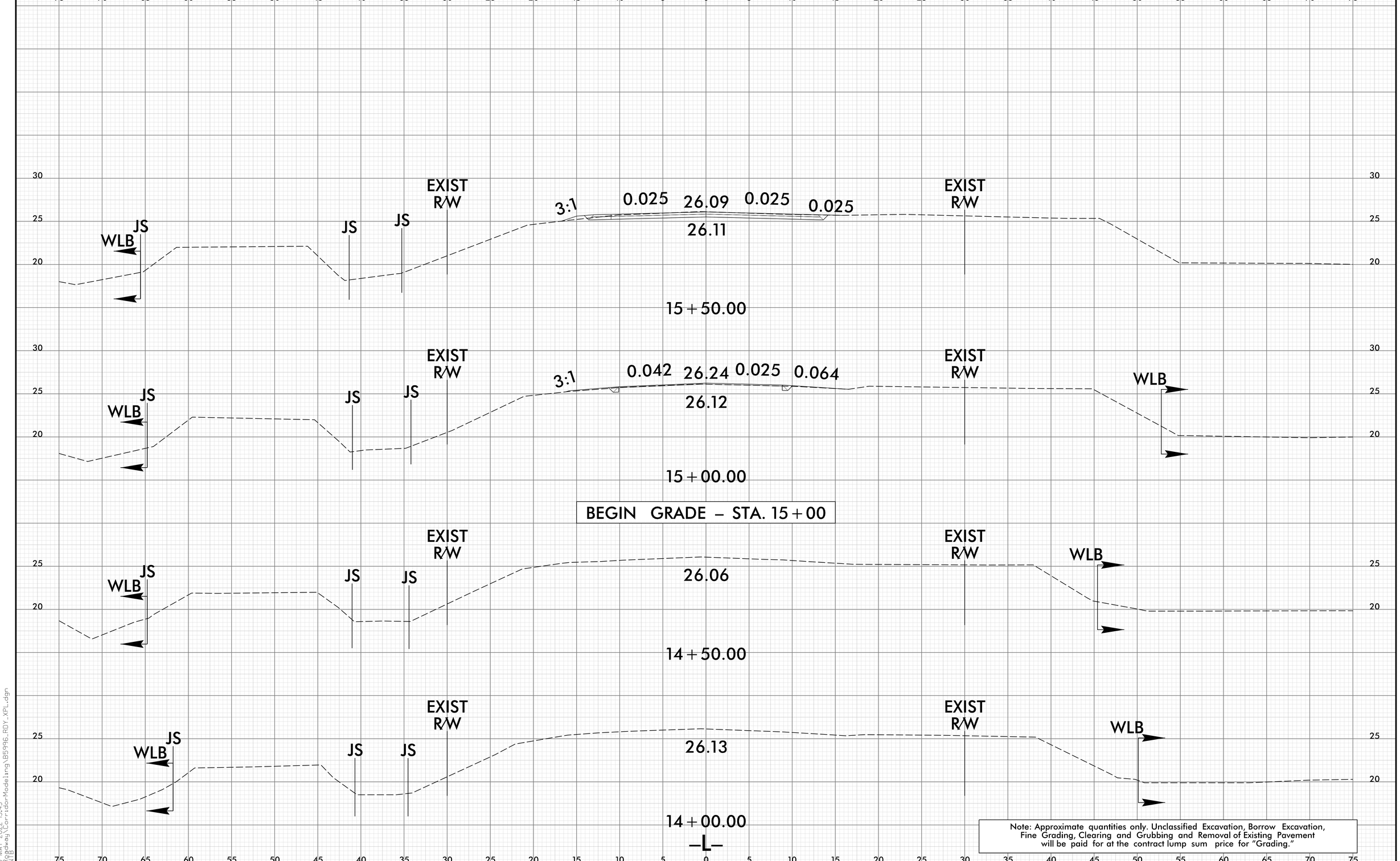

Note: Approximate quantities only. Unclassified Excavation, Borrow Excavation, Fine Grading, Clearing and Grubbing and Removal of Existing Pavement will be paid for at the contract lump sum price for "Grading."

8/23/99

05-MAY-2022 13:45
N:\Roadway\Corridor-Modeling\B5996_RDY_XPL.dgn
NATB

PROJ. REFERENCE NO.	SHEET NO.
B-5996	X-2

0 2.5 5

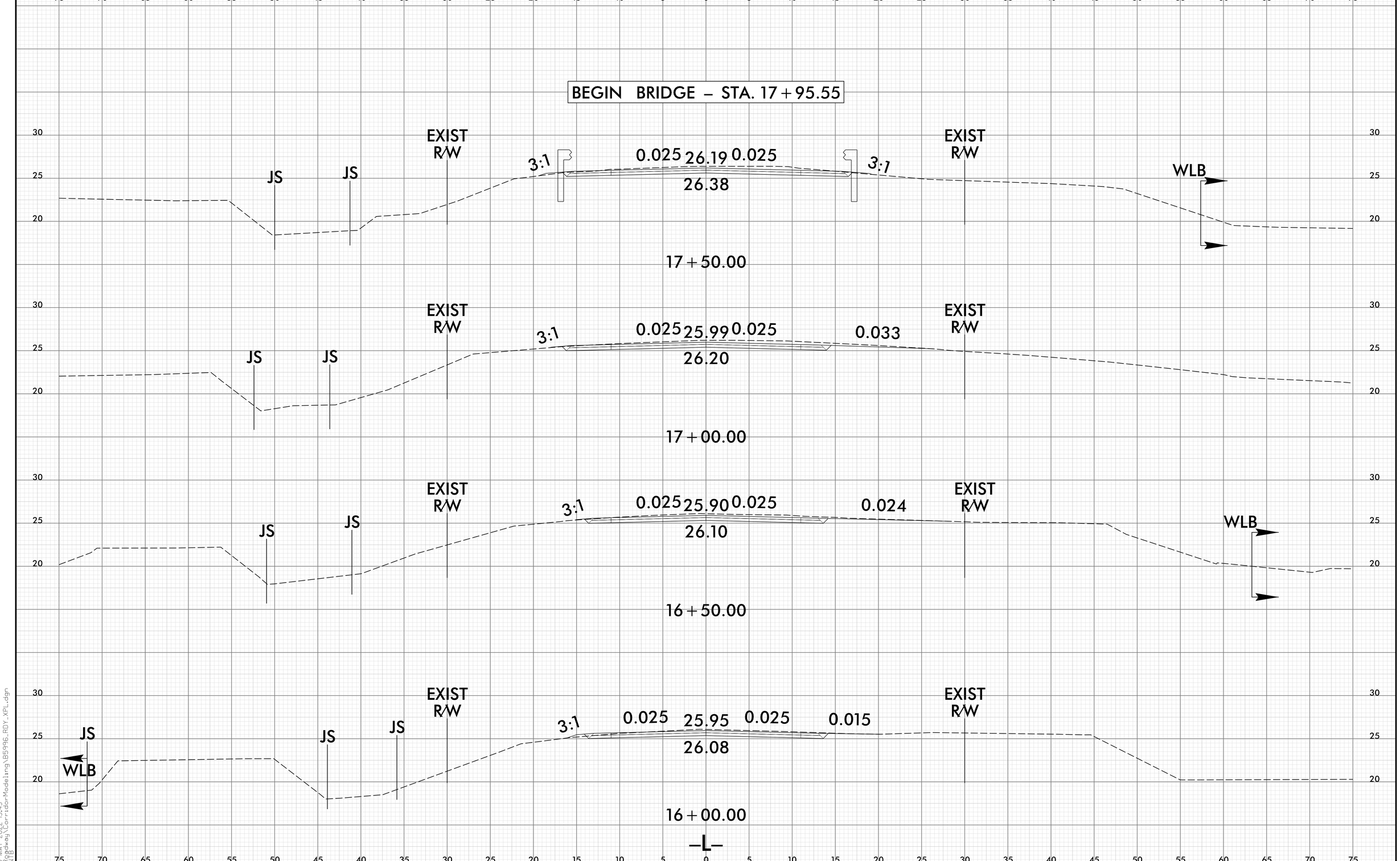

8/23/99

05-MAY-2022 13:45
NCRoadwayCorridorModeling\B5996_RDY_XPL.dgn
NRTB

0 2.5 5	PROJ. REFERENCE NO.	SHEET NO.
	B-5996	X-3

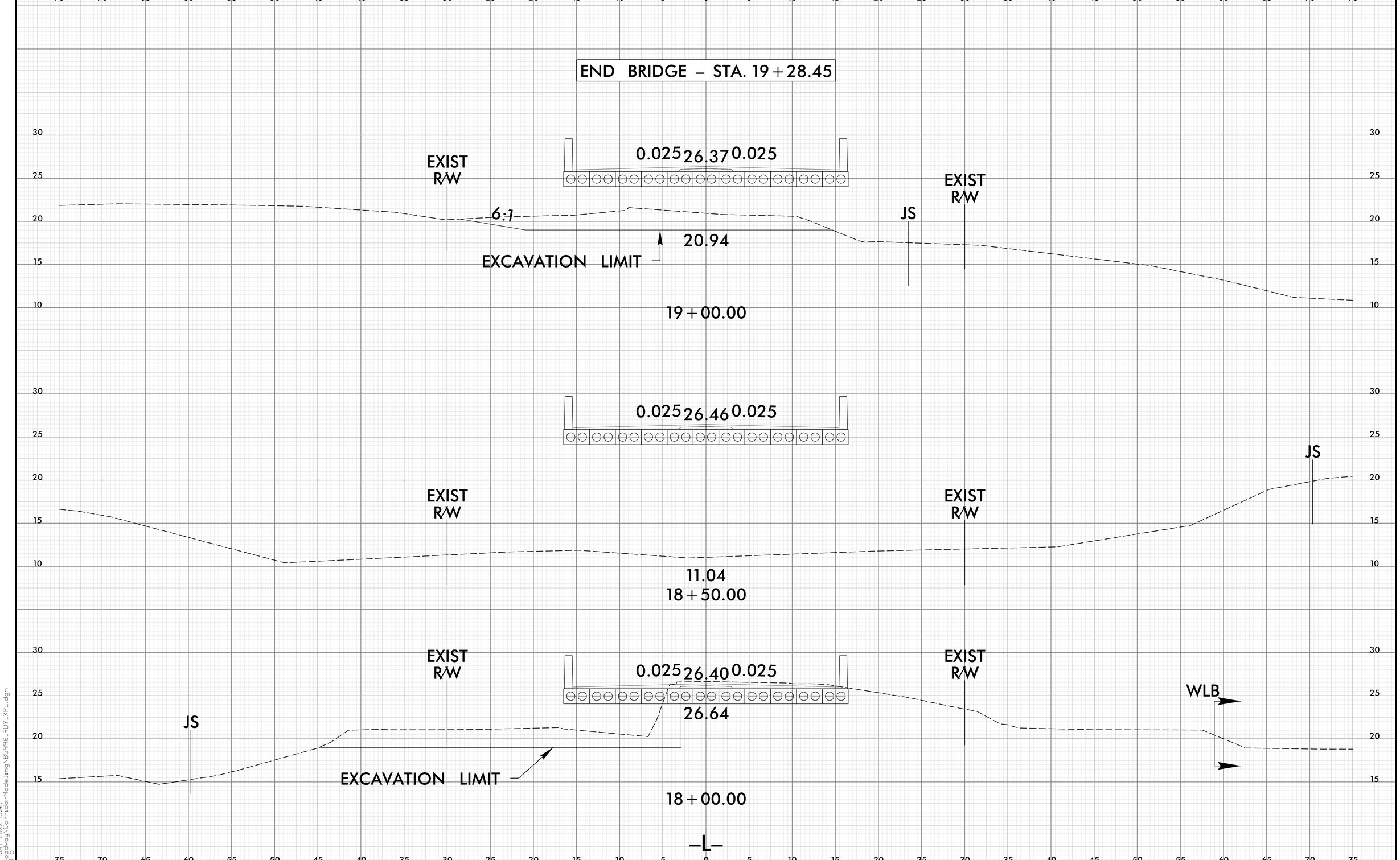

8/23/99
05-MAY-2022 13:45
N:\Roadway Corridor Modeling\B5996_RDY_XPL.dgn
NATB

0 2.5 5	PROJ. REFERENCE NO.	SHEET NO.
	B-5996	X-4

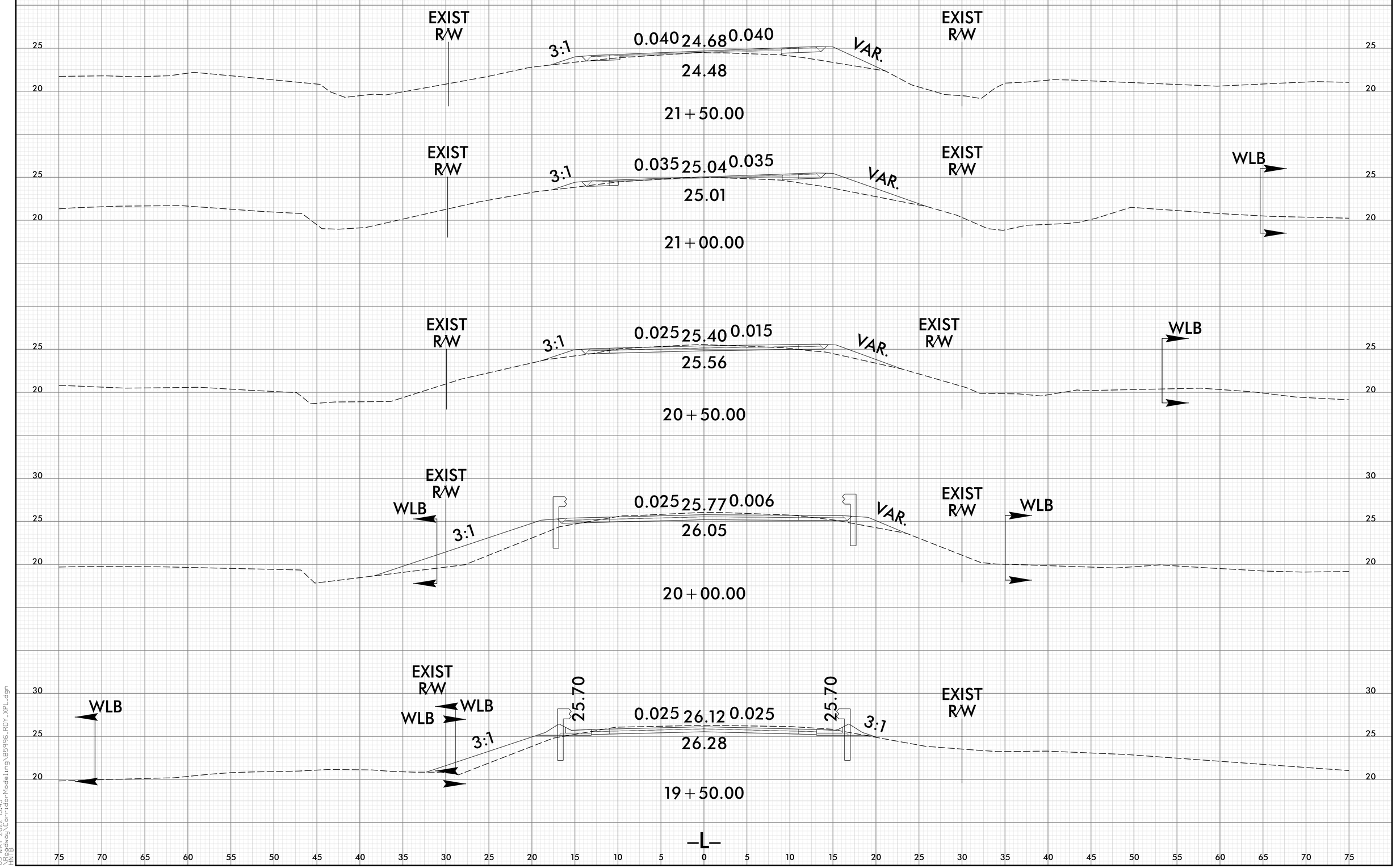

8/23/99

05-MAY-2022 13:45
\Roadway\Corridor-Modeling\B5996_RDY_XPL.dgn
UNIB

0 2.5 5	PROJ. REFERENCE NO.	SHEET NO.
	B-5996	X-5

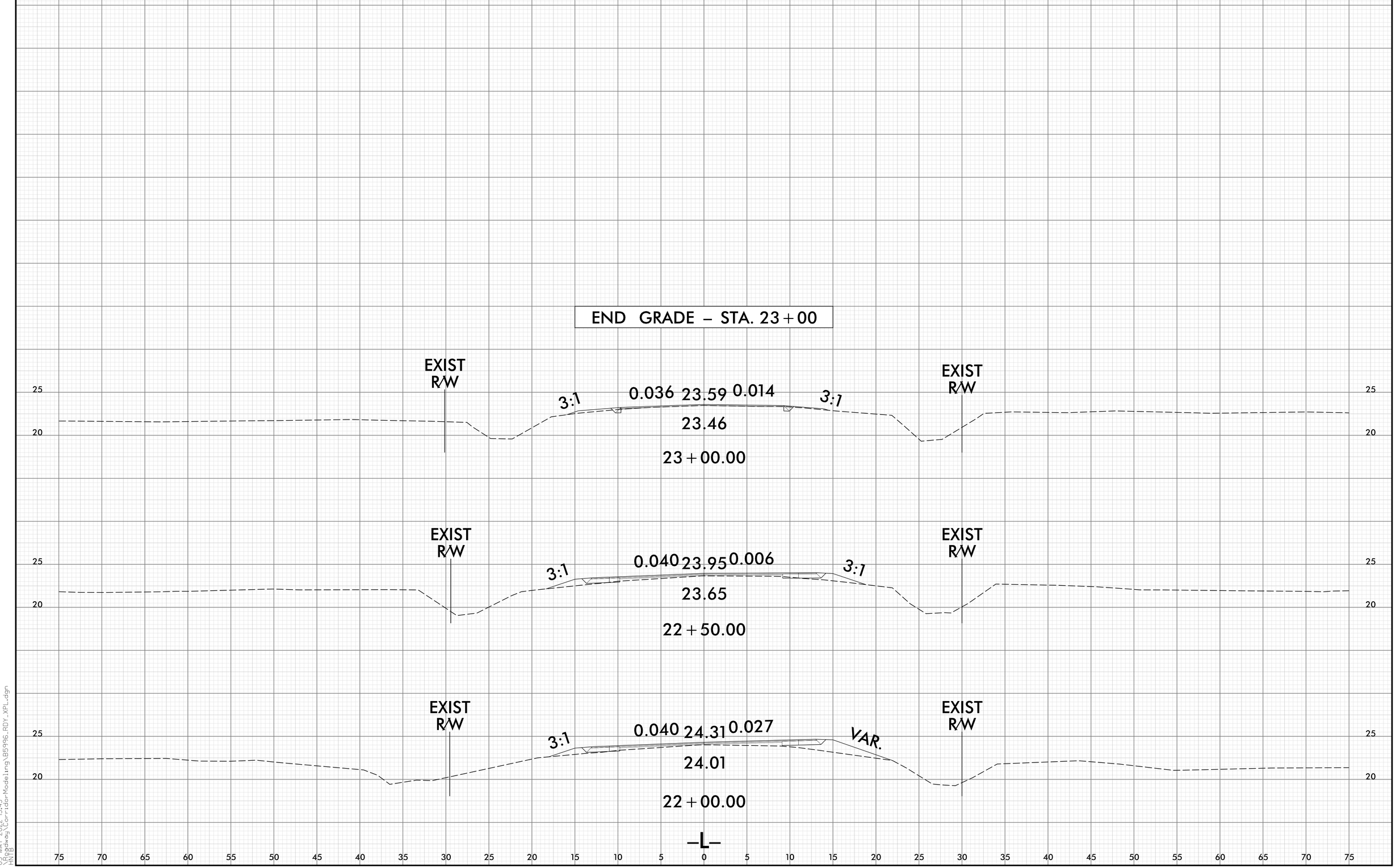

8/23/99

05-MAY-2022 13:45
Roadway\Corridor-Modeling\B5996_RDY_XPL.dgn
HNB

DocuSign Envelope ID: 2F119F11-162E-40A6-8315-83B74791BECE

F.A. PROJECT NO.: BRZ-1300(019)

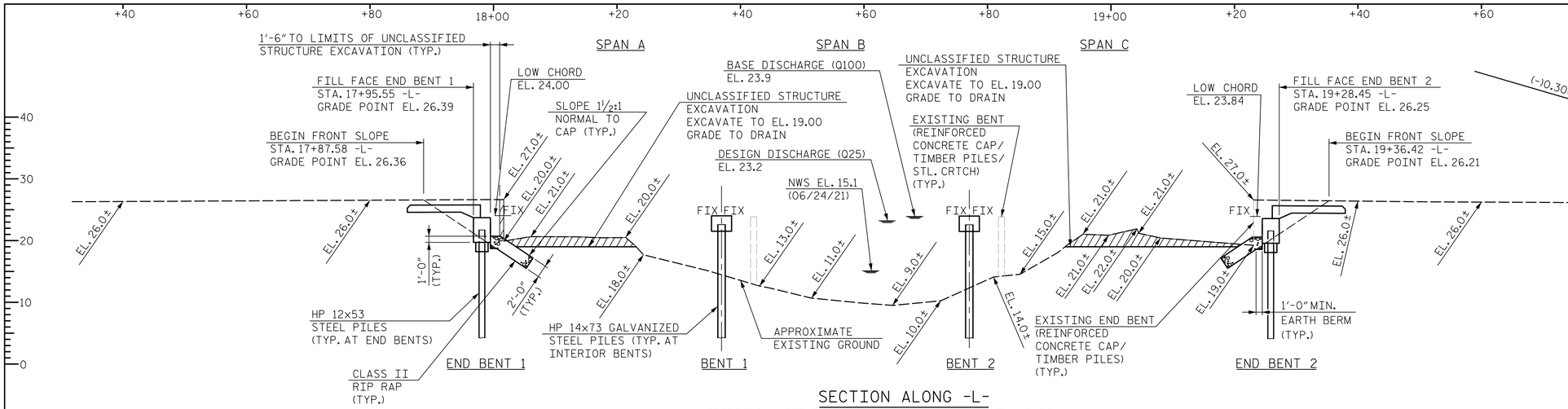

SECTION ALONG -L-

SECTIONS @ END BENTS AND BENTS ARE @ RIGHT ANGLES

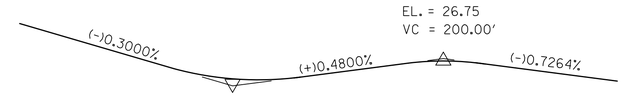

GRADE DATA -L-

BRIDGE HYDRAULIC DATA

DESIGN DISCHARGE	=	2,100 CFS
FREQUENCY OF DESIGN FLOOD	=	25 YR
DESIGN HIGH WATER ELEVATION	=	23.2 FT.
DRAINAGE AREA	=	33.8 SQ. MI.
BASE DISCHARGE (Q100)	=	3,100 CFS
BASE HIGH WATER ELEVATION	=	23.9 FT.

OVERTOPPING FLOOD DATA

OVERTOPPING DISCHARGE	=	2,200 CFS
FREQUENCY OF OVERTOPPING FLOOD	=	>25 YR
OVERTOPPING FLOOD ELEVATION	=	23.3 FT.

NOTE: OVERTOPS AT SAG STA. 23+88.00 -L-

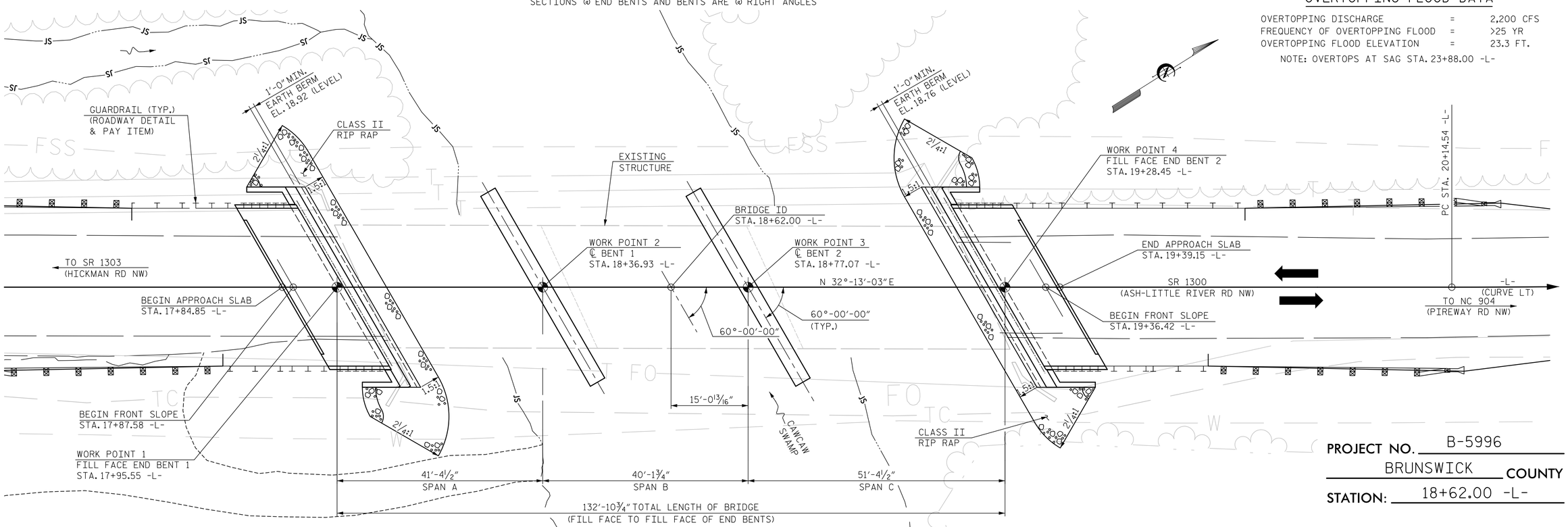

PLAN

PILES NOT SHOWN FOR CLARITY.

NO DECK DRAINS REQUIRED

I HEREBY CERTIFY THESE PLANS ARE THE AS-BUILT PLANS

PROJECT NO. B-5996

BRUNSWICK **COUNTY**

STATION: 18+62.00 -L-

SHEET 1 OF 2 REPLACES BRIDGE NO. 0126

STATE OF NORTH CAROLINA
DEPARTMENT OF TRANSPORTATION
RALEIGH

GENERAL DRAWING FOR BRIDGE ON SR 1300 OVER CAWCAW SWAMP BETWEEN SR 1303 AND NC 904

NORTH CAROLINA PROFESSIONAL SEAL 051219 ENGINEER SEAN R. SULLIVAN

DocuSigned by: Sean R. Sullivan 4/28/2022

DOCUMENT NOT CONSIDERED FINAL UNLESS ALL SIGNATURES COMPLETED

HNTB NORTH CAROLINA, P.C.
NC License No. C-1554
343 E. Six Forks Rd., Suite 200, Raleigh, N.C. 27609

DRAWN BY	M. WRIGHT	DATE	11/21
CHECKED BY	S. SULLIVAN	DATE	2/22
DESIGN ENGINEER OF RECORD	S. SULLIVAN	DATE	3/22

DWG. NO. 1

REVISIONS

NO.	BY	DATE	NO.	BY	DATE
1			3		
2			4		

SHEET NO. S-1

TOTAL SHEETS 19

4/28/2022 3:04:44 PM
_MOT_DO1_B5996_SWU_GD01_001_090126.dgn

DocuSign Envelope ID: CEDD4F16-CDDA-4202-B3E4-8EAF8668AAD0

BM: "BM3" - RR SPIKE IN BASE OF 19" GUM, 99.93' LT. OF STA. 19+70.68 -L-, EL. 21.34

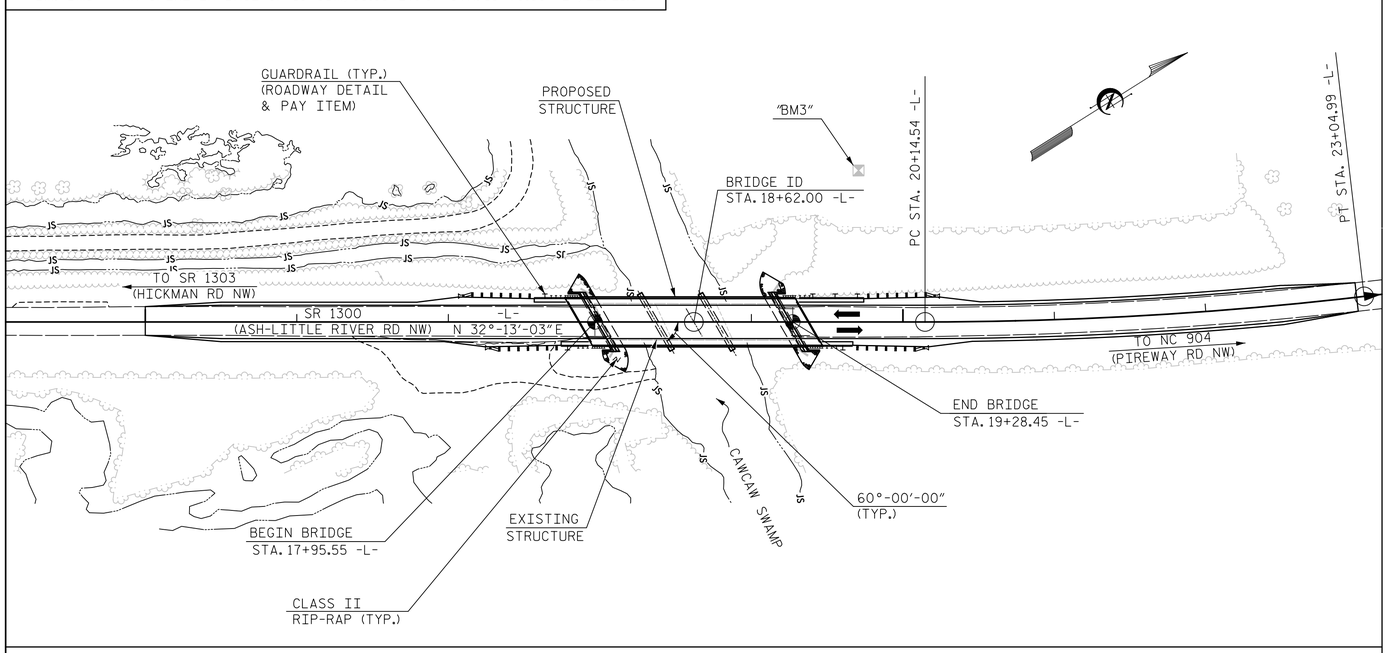

LOCATION SKETCH

FOR UTILITY INFORMATION, SEE UTILITY PLANS AND SPECIAL PROVISIONS.

SAMPLE BAR REPLACEMENT	
SIZE	LENGTH
#3	6'-2"
#4	7'-4"
#5	8'-6"
#6	9'-8"
#7	10'-10"
#8	12'-0"
#9	13'-2"
#10	14'-6"
#11	15'-10"

NOTE:
SAMPLE BAR REPLACEMENT LENGTHS BASED ON 30" (SAMPLE LENGTH) PLUS TWO SPLICE LENGTHS AND fy = 60ksi.

TOTAL BILL OF MATERIAL

	REMOVAL OF EXISTING STRUCTURE AT STATION 18+62.00 -L-	ASBESTOS ASSESSMENT	PDA TESTING	UNCLASSIFIED STRUCTURE EXCAVATION AT STATION 18+62.00 -L-	CLASS A CONCRETE	BRIDGE APPROACH SLABS AT STATION 18+62.00 -L-	REINFORCING STEEL	PILE DRIVING EQUIPMENT SETUP FOR HP 12x53 STEEL PILES	PILE DRIVING EQUIPMENT SETUP FOR HP 14x73 GALVANIZED STEEL PILES	HP 12x53 STEEL PILES		HP 14x73 GALVANIZED STEEL PILES		PILE REDRIVES	VERTICAL CONCRETE BARRIER RAIL	RIP RAP CLASS II (2'-0" THICK)	GEOTEXTILE FOR DRAINAGE	ELASTOMERIC BEARINGS	3'-0"x1'-9" PRESTRESSED CONCRETE CORED SLABS	
	LUMP SUM	LUMP SUM	EACH	LUMP SUM	CU. YDS.	LUMP SUM	LBS.	EACH	EACH	NO.	LIN. FT.	NO.	LIN. FT.	EACH	LIN. FT.	TONS	SQ. YDS.	LUMP SUM	NO.	LIN. FT.
SUPERSTRUCTURE	—	—	—	—	—	LUMP SUM	—	—	—	—	—	—	—	—	260.87	—	—	LUMP SUM	33	1,430
END BENT 1	—	—	—	LUMP SUM	24.1	—	2,923	7	—	7	420	—	—	—	—	88	98	—	—	—
BENT 1	—	—	—	—	12.9	—	2,500	—	8	—	—	8	520	8	—	—	—	—	—	—
BENT 2	—	—	—	—	12.9	—	2,500	—	8	—	—	8	560	8	—	—	—	—		
END BENT 2	—	—	—	LUMP SUM	24.1	—	2,923	7	—	7	420	—	—	—	—	85	94	—	—	—
TOTAL	LUMP SUM	LUMP SUM	1	LUMP SUM	74.0	LUMP SUM	10,846	14	16	14	840	16	1,080	16	260.87	173	192	LUMP SUM	33	1,430

GENERAL NOTES

ASSUMED LIVE LOAD = HL-93 OR ALTERNATE LOADING.

THIS BRIDGE HAS BEEN DESIGNED IN ACCORDANCE WITH THE AASHTO LRFD BRIDGE DESIGN SPECIFICATIONS.

THIS BRIDGE IS LOCATED IN SEISMIC ZONE 2.

THIS BRIDGE SHALL BE CONSTRUCTED USING TOP-DOWN CONSTRUCTION METHODS. THE USE OF A TEMPORARY CAUSEWAY OR WORK BRIDGE IS NOT PERMITTED.

FOR OTHER DESIGN DATA AND GENERAL NOTES, SEE SHEET SN.

FOR SUBMITTAL OF WORKING DRAWINGS, SEE SPECIAL PROVISIONS.

FOR FALSEWORK AND FORMWORK, SEE SPECIAL PROVISIONS.

FOR CRANE SAFETY, SEE SPECIAL PROVISIONS.

FOR GROUT FOR STRUCTURES, SEE SPECIAL PROVISIONS.

THE MATERIAL SHOWN IN THE CROSS-HATCHED AREA SHALL BE EXCAVATED FOR A DISTANCE OF 19.5 FT. ON EACH SIDE OF CENTERLINE BRIDGE AS DIRECTED BY THE ENGINEER. THIS WORK WILL BE PAID FOR AT THE CONTRACT LUMP SUM PRICE FOR UNCLASSIFIED STRUCTURE EXCAVATION. SEE SECTION 412 OF THE STANDARD SPECIFICATIONS.

INASMUCH AS THE PAINT SYSTEM ON THE EXISTING STRUCTURAL STEEL CONTAINS LEAD, THE CONTRACTOR'S ATTENTION IS DIRECTED TO ARTICLE 107-1 OF THE STANDARD SPECIFICATIONS. ANY COSTS RESULTING FROM COMPLIANCE WITH APPLICABLE STATE OR FEDERAL REGULATIONS PERTAINING TO HANDLING OF MATERIALS CONTAINING LEAD BASED PAINT SHALL BE INCLUDED IN THE BID PRICE FOR "REMOVAL OF EXISTING STRUCTURE AT STATION 18+62.00 -L-."

THE EXISTING THREE SPAN STRUCTURE WITH SPAN LENGTHS OF 40'-6", 40'-4", AND 40'-6" WITH REINFORCED CONCRETE DECK WITH 6 LINES 21 I-BEAMS AND 2 LINES 24 I-BEAMS @ VARIOUS CENTERS WITH A 29'-0 13/16" OUT TO OUT DECK WIDTH ON REINFORCED CONCRETE ABUTMENTS AND BENTS ON TIMBER PILES/STEEL CRUTCH SHALL BE REMOVED. IN ADDITION, ANY PILES REMAINING FROM PREVIOUS BRIDGE CONSTRUCTION OR MAINTENANCE OPERATIONS SHALL BE REMOVED AND INCLUDED IN THE LUMP SUM PAY ITEM FOR "REMOVAL OF EXISTING STRUCTURE AT STATION 18+62.00 -L-"

THE SUBSTRUCTURE OF THE EXISTING BRIDGE INDICATED ON THE PLANS IS FROM THE BEST INFORMATION AVAILABLE. SINCE THIS INFORMATION IS SHOWN FOR THE CONVENIENCE OF THE CONTRACTOR, THE CONTRACTOR SHALL HAVE NO CLAIM WHATSOEVER AGAINST THE DEPARTMENT OF TRANSPORTATION FOR ANY DELAYS OR ADDITIONAL COST INCURRED BASED ON DIFFERENCES BETWEEN THE EXISTING BRIDGE SUBSTRUCTURE SHOWN ON THE PLANS AND THE ACTUAL CONDITIONS AT THE PROJECT SITE.

REMOVAL OF THE EXISTING BRIDGE SHALL BE PERFORMED SO AS NOT TO ALLOW DEBRIS TO FALL INTO THE WATER. THE CONTRACTOR SHALL REMOVE THE BRIDGE AND SUBMIT PLANS FOR DEMOLITION IN ACCORDANCE WITH ARTICLE 402-2 OF THE STANDARD SPECIFICATIONS.

THIS STRUCTURE HAS BEEN DESIGNED IN ACCORDANCE WITH "HEC 18 - EVALUATING SCOUR AT BRIDGES."

FOR EROSION CONTROL MEASURES SEE EROSION CONTROL PLANS.

ASPHALT WEARING SURFACE IS INCLUDED IN ROADWAY QUANTITY ON ROADWAY PLANS.

FOR ASBESTOS ASSESSMENT FOR BRIDGE DEMOLITION AND RENOVATION ACTIVITIES, SEE SPECIAL PROVISIONS.

FOR INTERIOR BENTS 1 AND 2, ONLY PARTIAL GALVANIZING OF THE PILES IS REQUIRED. SEE INTERIOR BENT SHEET(S) FOR REQUIRED GALVANIZED LENGTHS. PAYMENT FOR PARTIALLY GALVANIZED PILES WILL BE MADE UNDER THE CONTRACT UNIT PRICE FOR GALVANIZED STEEL PILES.

THE CONTRACTOR SHALL PROVIDE INDEPENDENT ASSURANCE SAMPLES OF REINFORCING STEEL AS FOLLOWS: FOR PROJECTS REQUIRING UP TO 400 TONS OF REINFORCING STEEL, ONE 30 INCH SAMPLE OF EACH SIZE BAR USED, AND FOR PROJECTS REQUIRING OVER 400 TONS OF REINFORCING STEEL, TWO 30 INCH SAMPLES OF EACH SIZE BAR USED. THE SAMPLE BARS SHOULD COME FROM STEEL ACTUALLY USED IN THE PROJECT AND THE SAMPLE BARS SHOULD BE REPLACED BY SPLICED BARS AS SPECIFIED IN THE SAMPLE BAR REPLACEMENT CHART. PAYMENT FOR THE SAMPLE BARS AND REPLACEMENT REINFORCING STEEL SHALL BE CONSIDERED INCIDENTAL TO VARIOUS PAY ITEMS.

FOUNDATION NOTES

FOR PILES, SEE PILES PROVISION AND SECTION 450 OF THE STANDARD SPECIFICATIONS.

NORTH CAROLINA PROFESSIONAL SEAL 051219 ENGINEER SEAN R. SULLIVAN

DocuSigned by: 28C2F731A836458...
5/11/2022

PROJECT NO. B-5996
BRUNSWICK COUNTY
STATION: 18+62.00 -L-

SHEET 2 OF 2

STATE OF NORTH CAROLINA
DEPARTMENT OF TRANSPORTATION
RALEIGH

GENERAL DRAWING FOR BRIDGE ON SR 1300 OVER CAWCAW SWAMP BETWEEN SR 1303 AND NC 904

HNTB NORTH CAROLINA, P.C.
NC License No. C-1554
343 E. Six Forks Rd., Suite 200, Raleigh, N.C. 27609

DRAWN BY M. WRIGHT DATE 11/21
CHECKED BY S. SULLIVAN DATE 2/22
DESIGN ENGINEER OF RECORD S. SULLIVAN DATE 3/22

DWG. NO. 2

REVISIONS

NO.	BY	DATE	NO.	BY	DATE
1			3		
2			4		

SHEET NO. S-2
TOTAL SHEETS 19

DOCUMENT NOT CONSIDERED FINAL UNLESS ALL SIGNATURES COMPLETED

5/11/2022
4:41:1 PM
_W01_003_B5996_SWU_GDD2_002_090126.dgn

DocuSign Envelope ID: 2F119F11-162E-40A6-8315-83B74791BECE

SUMMARY OF PILE INFORMATION/INSTALLATION

(Blank entries indicate item is not applicable to structure)

End Bent/ Bent No, Pile(s) #-# (e.g., "Bent 1, Piles 1-5")	Factored Resistance per Pile TONS	Pile Cut-Off (Top of Pile) Elevation FT	Estimated Pile Lenth per Pile FT	Scour Critical Elevation FT	Driven Piles			Predrilling for Piles*			Drilled-In Piles		
					Min Pile Tip (Tip No Higher Than) Elev FT	Required Driving Resistance (RDR)** per Pile TONS	Total Pile Redrives Quantity EACH	Predrilling Length per Pile Lin FT	Predrilling Elevation (Elev Not To Predrill Below) FT	Maximum Predrilling Dia INCHES	Pile Excavation (Bottom of Hole) Elev FT	Pile Exc Not In Soil per Pile Lin FT	Pile Exc In Soil per Pile Lin FT
End Bent 1, Piles 1-7	71	55.04	55			120							
Bent 1, Piles 1-8	88	55.27	60	37	19.0	155	11						
End Bent 2, Piles 1-7	46	55.40	45			80							

*Predrilling for Piles is required for end bents/bents with a predrilling length and at the Contractor's option for end bents/bents with predrilling information but no predrilling length.

$$^{**}RDR = \frac{Factored\ Resistance + Factored\ Downdrag\ Load + Factored\ Dead\ Load}{Dynamic\ Resistance\ Factor} + Nominal\ Downdrag\ Resistance + \frac{Nominal\ Scour\ Resistance}{Scour\ Resistance\ Factor}$$

SUMMARY OF PDA/PILE ORDER LENGTHS

(Blank entries indicate item is not applicable to structure)

Pile Driving Analyzer (PDA)				Pile Order Lengths	
End Bent/ Bent No	PDA Testing Required? YES or MAYBE	PDA Test Pile Length FT	Total PDA Testing Quantity EACH	End Bent/ Bent No(s)	Pile Order Length Basis* EST or PDA
End Bent 1, Piles 1-7	MAYBE	60			
Bent 1, Piles 1-8	MAYBE	65	1		
End Bent 2, Piles 1-7	MAYBE	50			

*EST = Pile order lengths from estimated pile lengths; PDA = Pile order lengths based on PDA testing. For groups of end bents/bents with pile order lengths based on PDA testing, the first end bent/bent no. listed for each group is the representative end bent/bent with the PDA.

PILE DESIGN INFORMATION

(Blank entries indicate item is not applicable to structure)

End Bent/ Bent No, Pile(s) #-# (e.g., "Bent 1, Piles 1-5")	Factored Axial Load per Pile TONS	Factored Downdrag Load per Pile TONS	Factored Dead Load* per Pile TONS	Dynamic Resistance Factor	Nominal Downdrag Resistance per Pile TONS	Nominal Scour Resistance per Pile TONS	Scour Resistance Factor (Default = 1.00)
End Bent 1, Piles 1-7	71			0.60			
Bent 1, Piles 1-8	88			0.60		8.0	1.00
End Bent 2, Piles 1-7	46			0.60			

*Factored Dead Load is factored weight of pile above the ground line.

SUMMARY OF PILE ACCESSORIES

(Blank entries indicate item is not applicable to structure)

End Bent/ Bent No, Pile(s) #-# (e.g., "Bent 1, Piles 1-5")	Pipe Pile Plates Required? YES or MAYBE	Steel Pile Points			Steel Pile Tips Required? YES
		Pipe Pile Cutting Shoes Required? YES	Pipe Pile Conical Points Required? YES	H-Pile Points Required? YES	
End Bent 1, Piles 1-7				YES	
Bent 1, Piles 1-8				YES	
End Bent 2, Piles 1-7				YES	
TOTAL QTY:				22	

PROJECT NO. BP3.R002.1 (SF-810297)

SAMPSON COUNTY

STATION: 13+92.00 -L-

NOTES:

1. The Pile Foundation Tables are based on the bridge substructure design and foundation recommendations sealed by a North Carolina Professional Engineer (Jinyoung Park, PE# 032171) on 2-16-2022.
2. Total Pile Driving Equipment Setup quantity (not shown in Pile Foundation Tables) equals the number of driven piles, i.e., the number of piles with a Required Driving Resistance.
3. The Engineer will determine the need for PDA Testing when PDAs may be required.

NORTH CAROLINA PROFESSIONAL SEAL 051219 ENGINEER SEAN R. SULLIVAN

Sean R. Sullivan
2962F731A836458...

SIGNATURE DATE 4/28/2022

DOCUMENT NOT CONSIDERED FINAL UNLESS ALL SIGNATURES COMPLETED

STATE OF NORTH CAROLINA
DEPARTMENT OF TRANSPORTATION
RALEIGH

PILE FOUNDATION TABLES

REVISIONS						
NO.	BY:	DATE:	NO.	BY:	DATE:	
1			3			
2			4			

SHEET NO. S-3

TOTAL SHEETS 19

DocuSign Envelope ID: 2F119F11-162E-40A6-8315-83B74791BECE

LOAD AND RESISTANCE FACTOR RATING (LRFD) SUMMARY FOR PRESTRESSED CONCRETE GIRDERS

LEVEL		VEHICLE	WEIGHT (W) (TONS)	CONTROLLING LOAD RATING	MINIMUM RATING FACTORS (RF)	TONS = W X RF	STRENGTH I LIMIT STATE											SERVICE III LIMIT STATE						COMMENT NUMBER
								MOMENT					SHEAR						MOMENT					
							LIVELOAD FACTORS	DISTRIBUTION FACTORS (DF)	RATING FACTOR	SPAN	GIRDER LOCATION	DISTANCE FROM LEFT END OF SPAN (ft)	DISTRIBUTION FACTORS (DF)	RATING FACTOR	SPAN	GIRDER LOCATION	DISTANCE FROM LEFT END OF SPAN (ft)	LIVELOAD FACTORS	DISTRIBUTION FACTORS (DF)	RATING FACTOR	SPAN	GIRDER LOCATION	DISTANCE FROM LEFT END OF SPAN (ft)	
DESIGN LOAD RATING		HL-93(Inv)	N/A	1	1.352	--	1.75	0.252	1.95	40′	EL	19.423	0.653	1.35	40′	EL	7.769	0.80	0.252	1.72	40′	EL	19.423	
		HL-93(Opr)	N/A	--	1.753	--	1.35	0.252	2.52	40′	EL	19.423	0.653	1.75	40′	EL	7.769	N/A	--	--	--	--	--	
		HS-20(Inv)	36.000	2	1.544	55.583	1.75	0.252	2.45	40′	EL	19.423	0.653	1.54	40′	EL	7.769	0.80	0.252	2.14	40′	EL	19.423	
		HS-20(Opr)	36.000	--	2.001	72.053	1.35	0.252	3.17	40′	EL	19.423	0.653	2	40′	EL	7.769	N/A	--	--	--	--	--	
LEGAL LOAD RATING	SV	SNSH	13.500	--	3.929	53.037	1.4	0.252	5.64	40′	EL	19.423	0.653	3.93	40′	EL	7.769	0.80	0.252	3.99	40′	EL	19.423	
		SNGARBS2	20.000	--	2.985	59.708	1.4	0.252	4.63	40′	EL	15.538	0.653	2.99	40′	EL	7.769	0.80	0.252	3.28	40′	EL	19.423	
		SNAGRIS2	22.000	--	2.852	62.746	1.4	0.252	4.53	40′	EL	15.538	0.653	2.85	40′	EL	7.769	0.80	0.252	3.23	40′	EL	15.538	
		SNCOTTS3	27.250	--	1.98	53.947	1.4	0.252	2.82	40′	EL	19.423	0.653	1.98	40′	EL	7.769	0.80	0.252	1.99	40′	EL	19.423	
		SNAGGRS4	34.925	--	1.782	62.222	1.4	0.252	2.54	40′	EL	19.423	0.653	1.78	40′	EL	7.769	0.80	0.252	1.79	40′	EL	19.423	
		SNS5A	35.550	--	1.746	62.059	1.4	0.252	2.47	40′	EL	19.423	0.653	1.89	40′	EL	7.769	0.80	0.252	1.75	40′	EL	19.423	
		SNS6A	39.950	--	1.662	66.381	1.4	0.252	2.35	40′	EL	19.423	0.653	1.79	40′	EL	7.769	0.80	0.252	1.66	40′	EL	19.423	
		SNS7B	42.000	--	1.585	66.556	1.4	0.252	2.24	40′	EL	19.423	0.653	1.86	40′	EL	7.769	0.80	0.252	1.58	40′	EL	19.423	
	TTST	TNAGRIT3	33.000	--	2.045	67.476	1.4	0.252	2.89	40′	EL	19.423	0.653	2.07	40′	EL	7.769	0.80	0.252	2.04	40′	EL	19.423	
		TNT4A	33.075	--	1.951	64.52	1.4	0.252	2.93	40′	EL	19.423	0.653	1.95	40′	EL	7.769	0.80	0.252	2.07	40′	EL	19.423	
		TNT6A	41.600	--	1.757	73.106	1.4	0.252	2.49	40′	EL	19.423	0.653	1.91	40′	EL	7.769	0.80	0.252	1.76	40′	EL	19.423	
		TNT7A	42.000	--	1.795	75.386	1.4	0.252	2.55	40′	EL	19.423	0.653	1.79	40′	EL	7.769	0.80	0.252	1.80	40′	EL	19.423	
		TNT7B	42.000	--	1.729	72.638	1.4	0.252	2.61	40′	EL	19.423	0.653	1.73	40′	EL	7.769	0.80	0.252	1.84	40′	EL	19.423	
		TNAGRIT4	43.000	--	1.661	71.441	1.4	0.252	2.53	40′	EL	15.538	0.653	1.66	40′	EL	7.769	0.80	0.252	1.79	40′	EL	19.423	
		TNAGT5A	45.000	--	1.659	74.644	1.4	0.252	2.35	40′	EL	19.423	0.653	1.77	40′	EL	7.769	0.80	0.252	1.66	40′	EL	19.423	
		TNAGT5B	45.000	3	1.568	70.561	1.4	0.252	2.28	40′	EL	19.423	0.653	1.57	40′	EL	7.769	0.80	0.252	1.61	40′	EL	19.423	

LOAD FACTORS:

DESIGN LOAD RATING FACTORS	LIMIT STATE	γ_{DC}	γ_{DW}
	STRENGTH I	1.25	1.50
	SERVICE III	1.00	1.00

NOTES:

MINIMUM RATING FACTORS ARE BASED ON THE STRENGTH I AND SERVICE III LIMIT STATES.

ALLOWABLE STRESSES FOR SERVICE III LIMIT STATE ARE AS REQUIRED FOR DESIGN.

COMMENTS:

1.
2.
3.
4.

(#) CONTROLLING LOAD RATING

(1) DESIGN LOAD RATING (HL-93)
(2) DESIGN LOAD RATING (HS-20)
(3) LEGAL LOAD RATING **
** SEE CHART FOR VEHICLE TYPE

GIRDER LOCATION

I - INTERIOR GIRDER
EL - EXTERIOR LEFT GIRDER
ER - EXTERIOR RIGHT GIRDER

LRFR SUMMARY

FOR SPANS A & B

PROJECT NO. B-5996

BRUNSWICK COUNTY

STATION: 18+62.00 -L-

SHEET 1 OF 2

STATE OF NORTH CAROLINA
DEPARTMENT OF TRANSPORTATION
RALEIGH

STANDARD
LRFR SUMMARY FOR
40′ CORED SLAB UNIT
60° SKEW
(NON-INTERSTATE TRAFFIC)

NORTH CAROLINA PROFESSIONAL SEAL 051219 ENGINEER SEAN R. SULLIVAN

DocuSigned by: Sean R. Sullivan 4/28/2022

HNTB NORTH CAROLINA, P.C.
NC License No. C-1554
343 E. Six Forks Rd., Suite 200, Raleigh, N.C. 27609

DRAWN BY M. WRIGHT DATE 12/21
CHECKED BY S. SULLIVAN DATE 2/22
DESIGN ENGINEER OF RECORD S. SULLIVAN DATE 3/22

DWG. NO. 4

REVISIONS						SHEET NO.
NO.	BY	DATE	NO.	BY	DATE	S-4
1			3			TOTAL SHEETS
2			4			19

ASSEMBLED BY : M. WRIGHT DATE : 12/21
CHECKED BY : S. SULLIVAN DATE : 2/22

DRAWN BY : CVC 6/10
CHECKED BY : DNS 6/10

DOCUMENT NOT CONSIDERED FINAL UNLESS ALL SIGNATURES COMPLETED

STD. NO. 21LRFR1_60&120S_40L

4/28/2022 3:05:31 PM _W01_007_B5996_SMU_LRFR01_004_090126.dgn

DocuSign Envelope ID: 2F119F11-162E-40A6-8315-83B74791BECE

LOAD AND RESISTANCE FACTOR RATING (LRFD) SUMMARY FOR PRESTRESSED CONCRETE GIRDERS

LEVEL		VEHICLE	WEIGHT (W) (TONS)	CONTROLLING LOAD RATING	MINIMUM RATING FACTORS (RF)	TONS = W X RF	STRENGTH I LIMIT STATE											SERVICE III LIMIT STATE						COMMENT NUMBER
								MOMENT					SHEAR						MOMENT					
							LIVELOAD FACTORS	DISTRIBUTION FACTORS (DF)	RATING FACTOR	SPAN	GIRDER LOCATION	DISTANCE FROM LEFT END OF SPAN (ft)	DISTRIBUTION FACTORS (DF)	RATING FACTOR	SPAN	GIRDER LOCATION	DISTANCE FROM LEFT END OF SPAN (ft)	LIVELOAD FACTORS	DISTRIBUTION FACTORS (DF)	RATING FACTOR	SPAN	GIRDER LOCATION	DISTANCE FROM LEFT END OF SPAN (ft)	
DESIGN LOAD RATING		HL-93(Inv)	N/A	1	1.35	--	1.75	0.25	1.74	50′	EL	24.423	0.656	1.35	50′	EL	9.769	0.80	0.25	1.59	50′	EL	24.423	
		HL-93(Opr)	N/A	--	1.75	--	1.35	0.25	2.25	50′	EL	24.423	0.656	1.75	50′	EL	9.769	N/A	--	--	--	--	--	
		HS-20(Inv)	36.000	2	1.586	57.108	1.75	0.25	2.15	50′	EL	24.423	0.656	1.59	50′	EL	9.769	0.80	0.25	1.97	50′	EL	24.423	
		HS-20(Opr)	36.000	--	2.056	74.028	1.35	0.25	2.79	50′	EL	24.423	0.656	2.06	50′	EL	9.769	N/A	--	--	--	--	--	
LEGAL LOAD RATING	SV	SNSH	13.500	--	4.009	54.117	1.4	0.25	5.47	50′	EL	24.423	0.656	4.31	50′	EL	9.769	0.80	0.25	4.01	50′	EL	24.423	
		SNGARBS2	20.000	--	3.168	63.352	1.4	0.25	4.32	50′	EL	24.423	0.656	3.19	50′	EL	9.769	0.80	0.25	3.17	50′	EL	24.423	
		SNAGRIS2	22.000	--	3.009	66.192	1.4	0.25	4.18	50′	EL	19.538	0.656	3.01	50′	EL	9.769	0.80	0.25	3.07	50′	EL	24.423	
		SNCOTTS3	27.250	--	2	54.493	1.4	0.25	2.73	50′	EL	24.423	0.656	2.16	50′	EL	9.769	0.80	0.25	2.00	50′	EL	24.423	
		SNAGGRS4	34.925	--	1.739	60.742	1.4	0.25	2.37	50′	EL	24.423	0.656	1.88	50′	EL	9.769	0.80	0.25	1.74	50′	EL	24.423	
		SNS5A	35.550	--	1.696	60.292	1.4	0.25	2.31	50′	EL	24.423	0.656	1.96	50′	EL	9.769	0.80	0.25	1.70	50′	EL	24.423	
		SNS6A	39.950	--	1.586	63.364	1.4	0.25	2.16	50′	EL	24.423	0.656	1.82	50′	EL	9.769	0.80	0.25	1.59	50′	EL	24.423	
		SNS7B	42.000	--	1.512	63.487	1.4	0.25	2.06	50′	EL	24.423	0.656	1.85	50′	EL	9.769	0.80	0.25	1.51	50′	EL	24.423	
	TTST	TNAGRIT3	33.000	--	1.943	64.127	1.4	0.25	2.65	50′	EL	24.423	0.656	2.14	50′	EL	9.769	0.80	0.25	1.94	50′	EL	24.423	
		TNT4A	33.075	--	1.96	64.837	1.4	0.25	2.67	50′	EL	24.423	0.656	2.04	50′	EL	9.769	0.80	0.25	1.96	50′	EL	24.423	
		TNT6A	41.600	--	1.633	67.938	1.4	0.25	2.23	50′	EL	24.423	0.656	2	50′	EL	9.769	0.80	0.25	1.63	50′	EL	24.423	
		TNT7A	42.000	--	1.658	69.634	1.4	0.25	2.26	50′	EL	24.423	0.656	1.86	50′	EL	9.769	0.80	0.25	1.66	50′	EL	24.423	
		TNT7B	42.000	--	1.728	72.595	1.4	0.25	2.36	50′	EL	24.423	0.656	1.76	50′	EL	9.769	0.80	0.25	1.73	50′	EL	24.423	
		TNAGRIT4	43.000	--	1.64	70.537	1.4	0.25	2.24	50′	EL	24.423	0.656	1.69	50′	EL	9.769	0.80	0.25	1.64	50′	EL	24.423	
		TNAGT5A	45.000	--	1.532	68.95	1.4	0.25	2.09	50′	EL	24.423	0.656	1.75	50′	EL	9.769	0.80	0.25	1.53	50′	EL	24.423	
		TNAGT5B	45.000	3	1.501	67.548	1.4	0.25	2.05	50′	EL	24.423	0.656	1.6	50′	EL	9.769	0.80	0.25	1.50	50′	EL	24.423	

LOAD FACTORS:

DESIGN LOAD RATING FACTORS	LIMIT STATE	γ_{DC}	γ_{DW}
	STRENGTH I	1.25	1.50
	SERVICE III	1.00	1.00

NOTES:

MINIMUM RATING FACTORS ARE BASED ON THE STRENGTH I AND SERVICE III LIMIT STATES.

ALLOWABLE STRESSES FOR SERVICE III LIMIT STATE ARE AS REQUIRED FOR DESIGN.

COMMENTS:

1.
2.
3.
4.

(#) CONTROLLING LOAD RATING

(1) DESIGN LOAD RATING (HL-93)
(2) DESIGN LOAD RATING (HS-20)
(3) LEGAL LOAD RATING **
** SEE CHART FOR VEHICLE TYPE

GIRDER LOCATION

I - INTERIOR GIRDER
EL - EXTERIOR LEFT GIRDER
ER - EXTERIOR RIGHT GIRDER

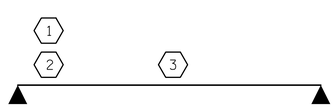

LRFR SUMMARY

FOR SPAN C

PROJECT NO. B-5996

BRUNSWICK COUNTY

STATION: 18+62.00 -L-

SHEET 2 OF 2

STATE OF NORTH CAROLINA
DEPARTMENT OF TRANSPORTATION
RALEIGH

STANDARD
LRFR SUMMARY FOR
50′ CORED SLAB UNIT
60° SKEW
(NON-INTERSTATE TRAFFIC)

NORTH CAROLINA PROFESSIONAL SEAL 051219 ENGINEER SEAN R. SULLIVAN

DocuSigned by: Sean R. Sullivan 2D8B731A836458... 4/28/2022

REVISIONS						SHEET NO.
NO.	BY	DATE	NO.	BY	DATE	S-5
1			3			TOTAL SHEETS
2			4			19

STD. NO. 21LRFR1_60&120S_50L

ASSEMBLED BY : M. WRIGHT DATE : 12/21
CHECKED BY : S. SULLIVAN DATE : 2/22

DRAWN BY : CVC 6/10
CHECKED BY : DNS 6/10

DOCUMENT NOT CONSIDERED FINAL UNLESS ALL SIGNATURES COMPLETED

HNTB NORTH CAROLINA, P.C.
NC License No. C-1554
343 E. Six Forks Rd., Suite 200, Raleigh, N.C. 27609

DRAWN BY M. WRIGHT DATE 12/21
CHECKED BY S. SULLIVAN DATE 2/22
DESIGN ENGINEER OF RECORD S. SULLIVAN DATE 3/22

DWG. NO. 5

4/28/2022 3:05:36 PM
_MOT_DOS_B5996_SMU_LRFRR02_005_090126.dgn

DocuSign Envelope ID: 2F119F11-162E-40A6-8315-83B74791BECE

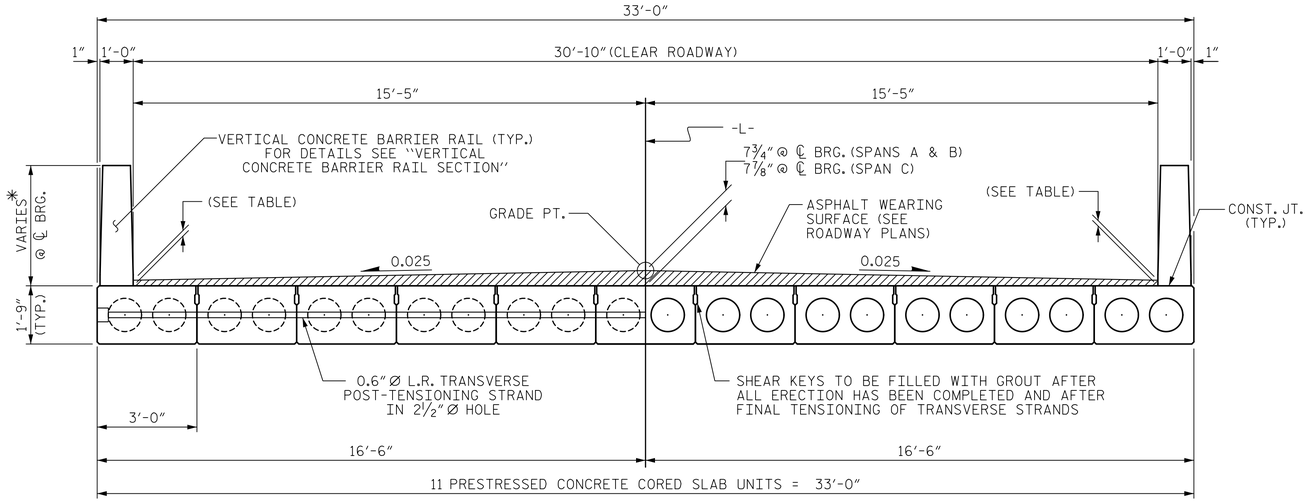

TYPICAL SECTION

* - THE HEIGHT OF THE BARRIER RAIL AND ASPHALT THICKNESS VARIES WHILE THE TOP OF THE BARRIER RAIL FOLLOWS THE PROFILE OF THE GUTTERLINE. FOR RAIL HEIGHT DETAILS AND ASPHALT THICKNESS SEE "OVERLAY THICKNESS @ ℄ BEARING" TABLE AND "VERTICAL CONCRETE BARRIER RAIL SECTION" DETAIL ON SHEET 4 OF 4.

OVERLAY THICKNESS & RAILING HEIGHT @ ℄ BEARING				
	OVERLAY THICKNESS		RAILING HEIGHT	
	LEFT	RIGHT	LEFT	RIGHT
END BENT 1	2¾"	3⅜"	3'-8¾"	3'-9⅜"
BENT 1	2¾"	2⅞"	3'-8¾"	3'-8⅞"
BENT 2	3¼"	2¾"	3'-9¼"	3'-8¾"
END BENT 2	3¾"	2¾"	3'-9¾"	3'-8¾"

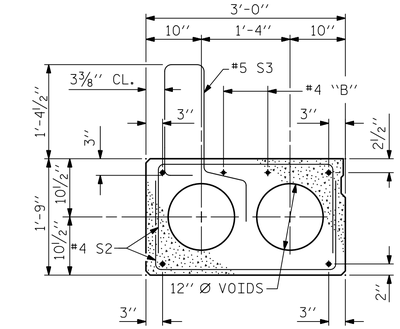

EXT. SLAB SECTION

(FOR PRESTRESSED STRAND LAYOUT, SEE INTERIOR SLAB SECTION.)

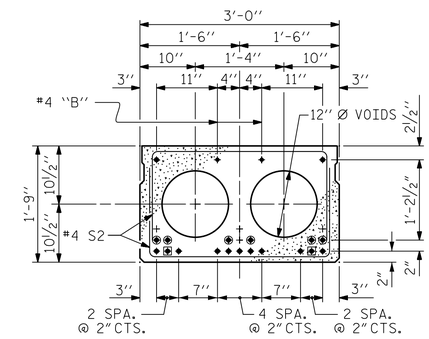

INTERIOR SLAB SECTION (40' UNIT)

(13 STRANDS REQUIRED)

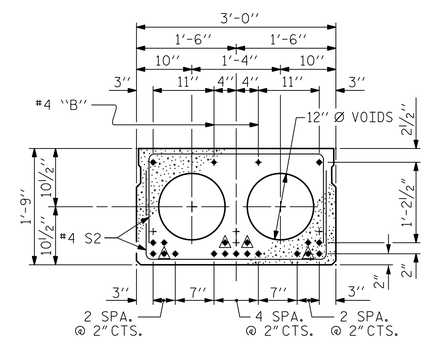

INTERIOR SLAB SECTION (50' UNIT)

(19 STRANDS REQUIRED)

0.6" Ø LOW RELAXATION STRAND LAYOUT

◬ BOND SHALL BE BROKEN ON THESE STRANDS FOR A DISTANCE OF 6'-0" FROM END OF CORED SLAB UNIT. SEE STANDARD SPECIFICATIONS, ARTICLE 1078-7.

◙ BOND SHALL BE BROKEN ON THESE STRANDS FOR A DISTANCE OF 2'-0" FROM END OF CORED SLAB UNIT. SEE STANDARD SPECIFICATIONS, ARTICLE 1078-7.

◉ OPTIONAL FULL LENGTH DEBONDED STRANDS. THESE STRANDS ARE NOT REQUIRED. IF THE FABRICATOR CHOOSES TO INCLUDE THESE STRANDS IN THE CORED SLAB UNIT, THE STRANDS SHALL BE DEBONDED FOR THE FULL LENGTH OF THE UNIT AT NO ADDITIONAL COST. SEE STANDARD SPECIFICATIONS, ARTICLE 1078-7.

DEBONDING LEGEND

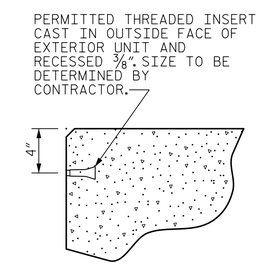

THREADED INSERT DETAIL

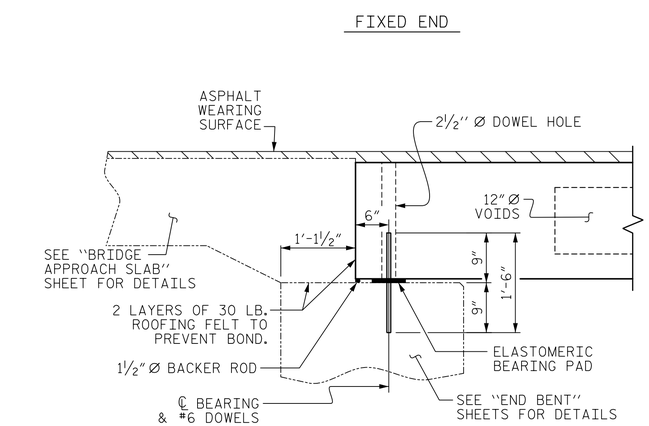

SECTION AT END BENT

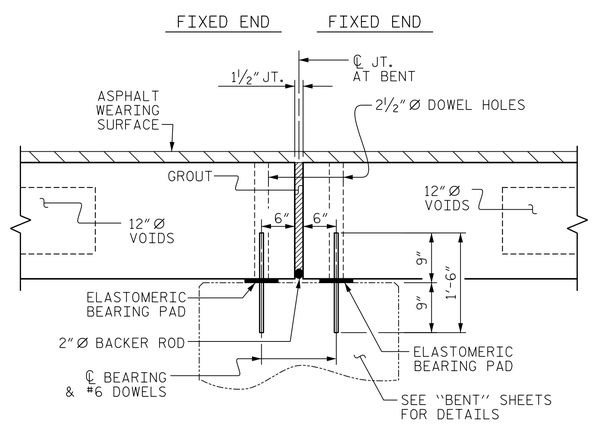

SECTION AT BENT

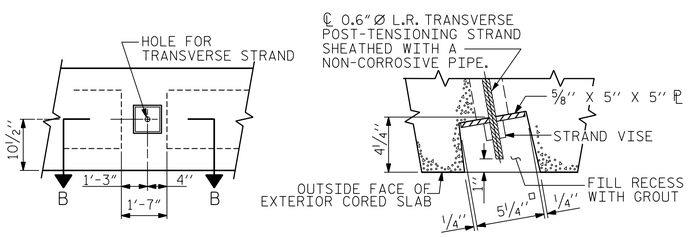

ELEVATION VIEW

SECTION B-B

GROUTED RECESS AT END OF POST-TENSIONED STRAND OF CORED SLABS

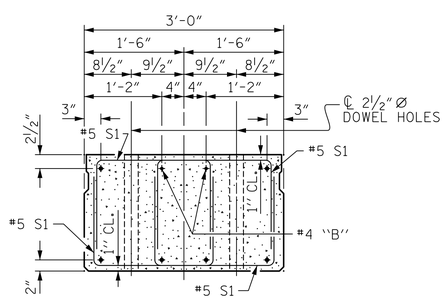

END ELEVATION

SHOWING PLACEMENT OF DOUBLE STIRRUPS AND LOCATION OF DOWEL HOLES. (STRAND LAYOUT NOT SHOWN.) INTERIOR SLAB UNIT SHOWN-EXTERIOR SLAB UNIT SIMILAR EXCEPT SHEAR KEY LOCATION.

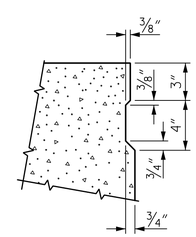

SHEAR KEY DETAIL

NOTE: OMIT SHEAR KEY ON OUTSIDE FACE OF EXTERIOR CORED SLABS.

PROJECT NO. B-5996

BRUNSWICK COUNTY

STATION: 18+62.00 -L-

SHEET 1 OF 4

STATE OF NORTH CAROLINA
DEPARTMENT OF TRANSPORTATION
RALEIGH

STANDARD
3'-0" X 1'-9"
PRESTRESSED CONCRETE CORED SLAB UNIT
60° SKEW

NORTH CAROLINA PROFESSIONAL ENGINEER SEAL 051219 SEAN R. SULLIVAN

DocuSigned by: Sean R. Sullivan 2B6B8131AE36458... 4/28/2022

ASSEMBLED BY : M. WRIGHT	DATE : 12/21	
CHECKED BY : S. SULLIVAN	DATE : 2/22	
DRAWN BY : DGE 5/09	REV. 9/14	MAA/TMG
CHECKED BY : BCH 6/09		

HNTB NORTH CAROLINA, P.C.
NC License No. C-1554
343 E. Six Forks Rd., Suite 200, Raleigh, N.C. 27609

DRAWN BY M. WRIGHT DATE 12/21
CHECKED BY S. SULLIVAN DATE 2/22
DESIGN ENGINEER OF RECORD S. SULLIVAN DATE 3/22

DWG. NO. 6

DOCUMENT NOT CONSIDERED FINAL UNLESS ALL SIGNATURES COMPLETED

REVISIONS						SHEET NO.
NO.	BY	DATE	NO.	BY	DATE	S-6
1			3			TOTAL SHEETS
2			4			19

STD. NO. 21" PCS2_33_60S

4/28/2022 3:05:42 PM
_MD1_DT1_B5996_SMU_CS01_006_090126.dgn

DocuSign Envelope ID: 2F119F11-162E-40A6-8315-83B74791BECE

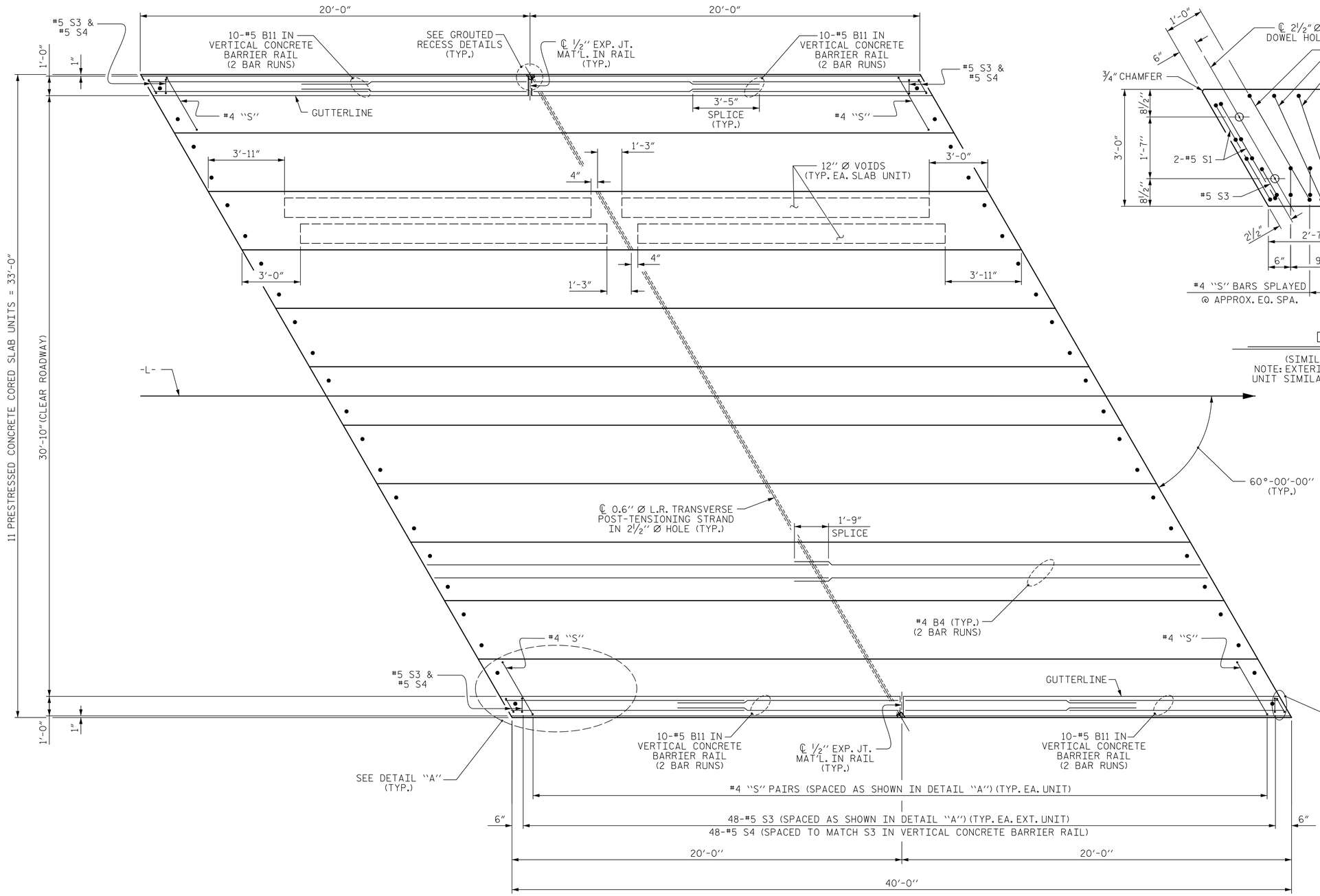

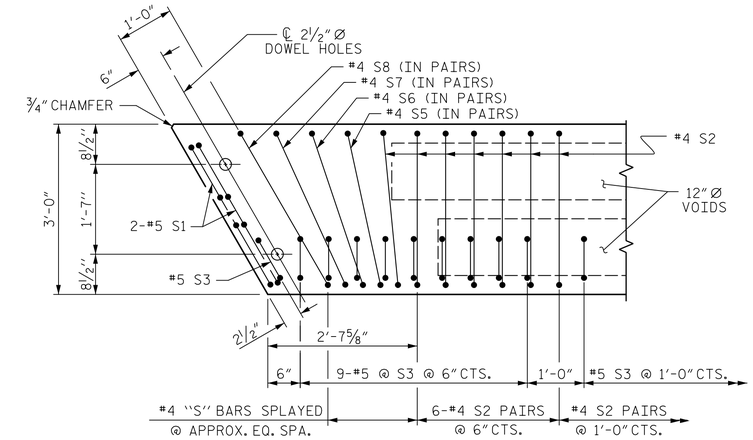

DETAIL "A"

(SIMILAR EACH END OF UNIT)
NOTE: EXTERIOR UNIT SHOWN - INTERIOR UNIT SIMILAR EXCEPT OMIT #5 S3 BARS.

PLAN OF UNIT

NORTH CAROLINA PROFESSIONAL SEAL 051219 ENGINEER SEAN R. SULLIVAN

DocuSigned by: Sean R. Sullivan 4/28/2022

PROJECT NO. B-5996

BRUNSWICK **COUNTY**

STATION: 18+62.00 -L-

SHEET 2 OF 4

STATE OF NORTH CAROLINA
DEPARTMENT OF TRANSPORTATION
RALEIGH

PLAN OF 40' UNIT 30'-10" CLEAR ROADWAY 60° SKEW

ASSEMBLED BY : M. WRIGHT	DATE : 12/21
CHECKED BY : S. SULLIVAN	DATE : 2/22

DRAWN BY : DGE	3/09	REV. 12/5/11	MAA/AAC
CHECKED BY : BCH	3/09	REV. 8/14	MAA/TMG

DOCUMENT NOT CONSIDERED FINAL UNLESS ALL SIGNATURES COMPLETED

HNTB NORTH CAROLINA, P.C.
NC License No. C-1554
343 E. Six Forks Rd., Suite 200, Raleigh, N.C. 27609

DRAWN BY	M. WRIGHT	DATE	12/21
CHECKED BY	S. SULLIVAN	DATE	2/22
DESIGN ENGINEER OF RECORD	S. SULLIVAN	DATE	3/22

DWG. NO. 7

REVISIONS						SHEET NO.
NO.	BY	DATE	NO.	BY	DATE	S-7
1			3			TOTAL SHEETS
2			4			19

STD.NO. 21" PCS_33_60S_40L

4/28/2022 3:05:48 PM
_W01_D13_B5996_SMU_GS02_007_090126.dgn

DocuSign Envelope ID: 2F119F11-162E-40A6-8315-83B74791BECE

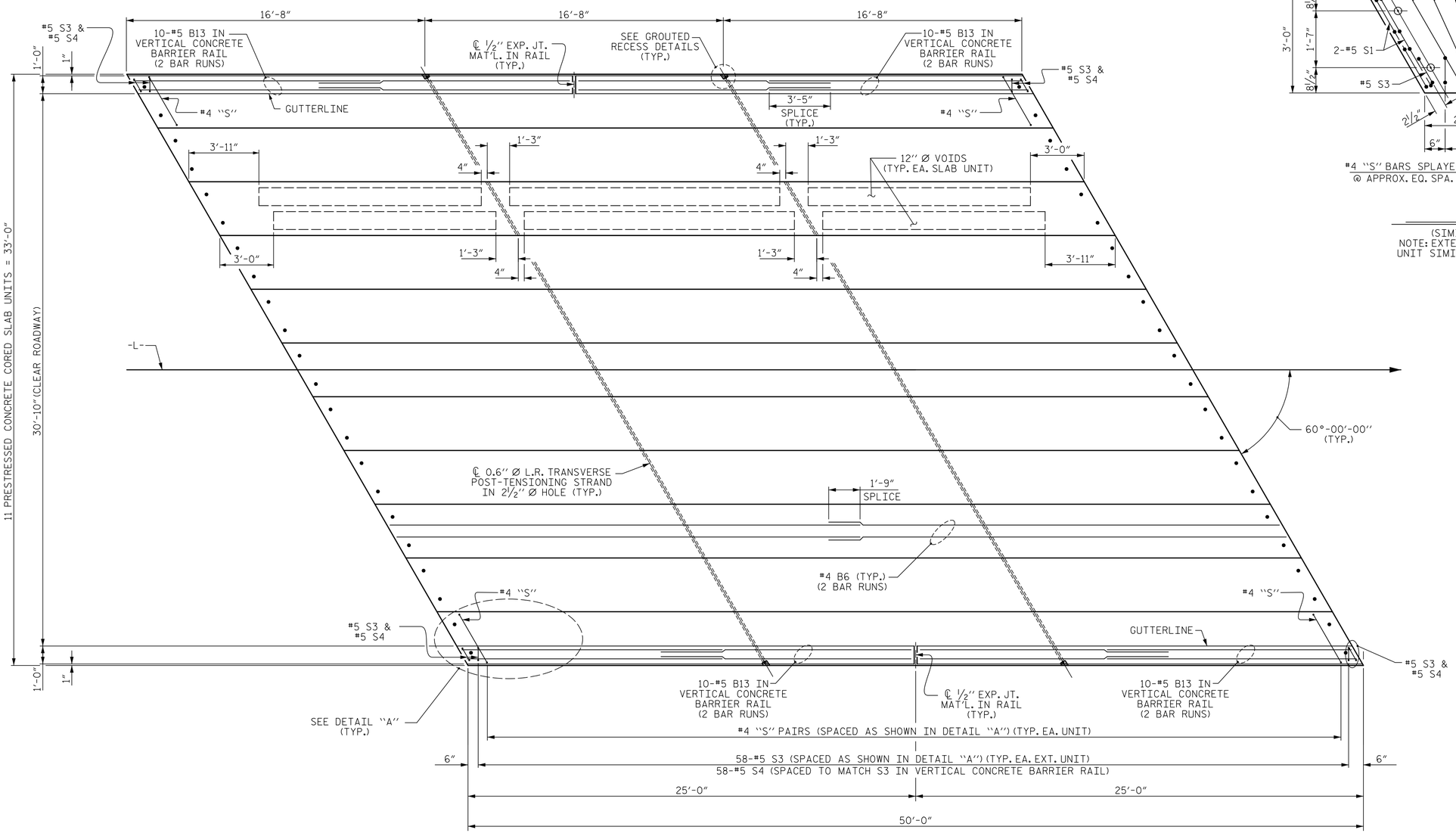

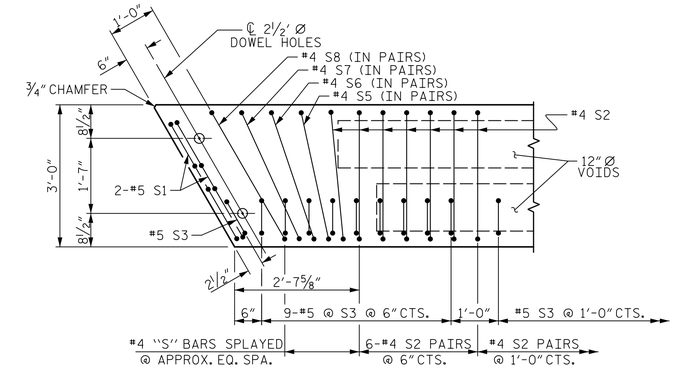

DETAIL "A"

(SIMILAR EACH END OF UNIT)
NOTE: EXTERIOR UNIT SHOWN - INTERIOR UNIT SIMILAR EXCEPT OMIT #5 S3 BARS.

PROJECT NO. B-5996

BRUNSWICK COUNTY

STATION: 18+62.00 -L-

SHEET 3 OF 4

PLAN OF UNIT

NORTH CAROLINA PROFESSIONAL ENGINEER SEAL 051219 SEAN R. SULLIVAN

DocuSigned by: Sean R. Sullivan 20B8B731A836458... 4/28/2022

STATE OF NORTH CAROLINA
DEPARTMENT OF TRANSPORTATION
RALEIGH

PLAN OF 50' UNIT
30'-10" CLEAR ROADWAY
60° SKEW

ASSEMBLED BY : M. WRIGHT		DATE : 12/21	
CHECKED BY : S. SULLIVAN		DATE : 2/22	
DRAWN BY : DGE 3/09	REV. 12/5/11	MAA/AAC	
CHECKED BY : BCH 3/09	REV. 8/14	MAA/TMG	

DOCUMENT NOT CONSIDERED FINAL UNLESS ALL SIGNATURES COMPLETED

HNTB NORTH CAROLINA, P.C.
NC License No. C-1554
343 E. Six Forks Rd., Suite 200, Raleigh, N.C. 27609

DRAWN BY	M. WRIGHT	DATE	12/21
CHECKED BY	S. SULLIVAN	DATE	2/22
DESIGN ENGINEER OF RECORD	S. SULLIVAN	DATE	3/22

DWG. NO. 8

REVISIONS						SHEET NO.
NO.	BY	DATE	NO.	BY	DATE	S-8
1			3			TOTAL SHEETS
2			4			19

STD.NO. 21"PCS_33_60S_50L

4/28/2022 3:05:53 PM _W01_015_B5996_SMU_CS03_008_090126.dgn

DocuSign Envelope ID: 2F119F11-162E-40A6-8315-83B74791BECE

BILL OF MATERIAL FOR ONE 40′ CORED SLAB UNIT

				EXTERIOR UNIT		INTERIOR UNIT	
BAR	NUMBER	SIZE	TYPE	LENGTH	WEIGHT	LENGTH	WEIGHT
B4	4	#4	STR	20′-9″	55	20′-9″	55
S1	8	#5	3	4′-6″	38	4′-6″	38
S2	82	#4	3	5′-4″	292	5′-4″	292
* S3	50	#5	1	5′-7″	291		
S5	4	#4	3	5′-5″	14	5′-5″	14
S6	4	#4	3	5′-6″	15	5′-6″	15
S7	4	#4	3	5′-7″	15	5′-7″	15
S8	4	#4	3	5′-9″	15	5′-9″	15
REINFORCING STEEL LBS.					444		444
* EPOXY COATED REINFORCING STEEL LBS.					291		
5000 P.S.I. CONCRETE CU. YDS.					5.9		5.9
0.6″ Ø L.R. STRANDS No.					13		13

BILL OF MATERIAL FOR ONE 50′ CORED SLAB UNIT

				EXTERIOR UNIT		INTERIOR UNIT	
BAR	NUMBER	SIZE	TYPE	LENGTH	WEIGHT	LENGTH	WEIGHT
B6	4	#4	STR	25′-9″	69	25′-9″	69
S1	8	#5	3	4′-6″	38	4′-6″	38
S2	102	#4	3	5′-4″	363	5′-4″	363
* S3	60	#5	1	5′-7″	349		
S5	4	#4	3	5′-5″	14	5′-5″	14
S6	4	#4	3	5′-6″	15	5′-6″	15
S7	4	#4	3	5′-7″	15	5′-7″	15
S8	4	#4	3	5′-9″	15	5′-9″	15
REINFORCING STEEL LBS.					529		529
* EPOXY COATED REINFORCING STEEL LBS.					349		
6500 P.S.I. CONCRETE CU. YDS.					7.3		7.3
0.6″ Ø L.R. STRANDS No.					19		19

DEAD LOAD DEFLECTION AND CAMBER

	3′-0″ × 1′-9″
40′ CORED SLAB UNIT	0.6″ Ø L.R. STRAND
CAMBER (SLAB ALONE IN PLACE)	7/8″ ↑
DEFLECTION DUE TO SUPERIMPOSED DEAD LOAD **	1/8″ ↓
FINAL CAMBER	3/4″ ↑

** INCLUDES FUTURE WEARING SURFACE

DEAD LOAD DEFLECTION AND CAMBER

	3′-0″ × 1′-9″
50′ CORED SLAB UNIT	0.6″ Ø L.R. STRAND
CAMBER (SLAB ALONE IN PLACE)	1 1/2″ ↑
DEFLECTION DUE TO SUPERIMPOSED DEAD LOAD **	3/8″ ↓
FINAL CAMBER	1 1/8″ ↑

** INCLUDES FUTURE WEARING SURFACE

NOTES

ALL PRESTRESSING STRANDS SHALL BE 7-WIRE LOW RELAXATION GRADE 270 STRANDS AND SHALL CONFORM TO AASHTO M203 EXCEPT FOR SAMPLING REQUIREMENTS WHICH SHALL BE IN ACCORDANCE WITH THE STANDARD SPECIFICATIONS.

ALL REINFORCING STEEL CAST WITH THE CORED SLAB SECTIONS SHALL BE GRADE 60 AND SHALL BE INCLUDED IN THE UNIT PRICE BID FOR PRESTRESSED CONCRETE CORED SLABS.

RECESSES FOR TRANSVERSE STRANDS SHALL BE GROUTED AFTER THE TENSIONING OF THE STRANDS.

THE 2 1/2″ Ø DOWEL HOLES AT FIXED ENDS OF SLAB SECTIONS SHALL BE FILLED WITH NON-SHRINK GROUT.

THE BACKER RODS SHALL CONFORM TO THE REQUIREMENTS OF TYPE M BOND BREAKER. SEE SECTION 1028 OF THE STANDARD SPECIFICATIONS.

WHEN CORED SLABS ARE CAST, AN INTERNAL HOLD-DOWN SYSTEM SHALL BE EMPLOYED TO PREVENT VOIDS FROM RISING OR MOVING SIDEWAYS. AT LEAST SIX WEEKS PRIOR TO CASTING CORED SLABS, THE CONTRACTOR SHALL SUBMIT TO THE ENGINEER FOR REVIEW AND COMMENT, DETAILED DRAWINGS OF THE PROPOSED HOLD-DOWN SYSTEM. IN ADDITION TO STRUCTURAL DETAILS, LOCATION AND SPACING OF THE HOLD-DOWNS SHALL BE INDICATED.

ALL REINFORCING STEEL IN THE VERTICAL CONCRETE BARRIER RAIL SHALL BE EPOXY COATED.

PRESTRESSING STRANDS SHALL BE CUT FLUSH WITH THE CORED SLAB UNIT ENDS.

APPLY EPOXY PROTECTIVE COATING TO CORED SLAB UNIT ENDS.

GROOVED CONTRACTION JOINTS, 1/2″ IN DEPTH, SHALL BE TOOLED IN ALL EXPOSED FACES OF THE BARRIER RAIL AND IN ACCORDANCE WITH ARTICLE 825-10(B) OF THE STANDARD SPECIFICATIONS. A CONTRACTION JOINT SHALL BE LOCATED AT EACH THIRD POINT BETWEEN BARRIER RAIL EXPANSION JOINTS. ONLY ONE CONTRACTION JOINT IS REQUIRED AT MIDPOINT OF BARRIER RAIL SEGMENTS LESS THAN 20 FEET IN LENGTH AND NO CONTRACTION JOINTS ARE REQUIRED FOR THOSE SEGMENTS LESS THAN 10 FEET IN LENGTH.

FLAME CUTTING OF THE TRANSVERSE POST-TENSIONING STRAND IS NOT ALLOWED.

THE TRANSFER OF LOAD FROM THE ANCHORAGES TO THE CORED SLAB UNIT SHALL BE DONE WHEN THE CONCRETE HAS REACHED A COMPRESSIVE STRENGTH OF NOT LESS THAN THE REQUIRED STRENGTH SHOWN IN THE "CONCRETE RELEASE STRENGTH" TABLE.

FOR GROUT FOR STRUCTURES, SEE SPECIAL PROVISIONS.

THE PERMITTED THREADED INSERTS ARE DETAILED AS AN OPTION FOR THE CONTRACTOR TO ATTACH FALSEWORK AND FORMWORK DURING CONSTRUCTION.

THE PERMITTED THREADED INSERTS IN THE EXTERIOR UNITS SHALL BE SIZED BY THE CONTRACTOR, SPACED AT 4′-0″ CENTERS AND GALVANIZED IN ACCORDANCE WITH SECTION 1076 OF THE STANDARD SPECIFICATIONS. STAINLESS STEEL THREADED INSERTS MAY BE USED AS AN ALTERNATE.

THE PERMITTED THREADED INSERTS SHALL BE GROUTED BY THE CONTRACTOR IMMEDIATELY FOLLOWING REMOVAL OF THE FALSEWORK.

THE COST OF THE PERMITTED THREADED INSERTS SHALL BE INCLUDED IN THE PRICE BID FOR THE PRECAST UNITS.

POST-TENSIONING SHALL BE DONE IN ACCORDANCE WITH THE STANDARD SPECIFICATIONS.

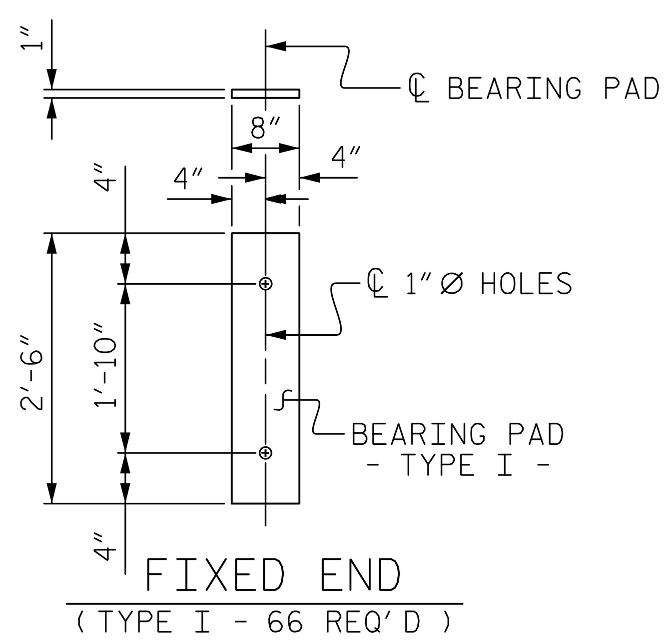

ELASTOMERIC BEARING DETAILS

ELASTOMER IN ALL BEARINGS SHALL BE 50 DUROMETER HARDNESS.

BAR TYPES

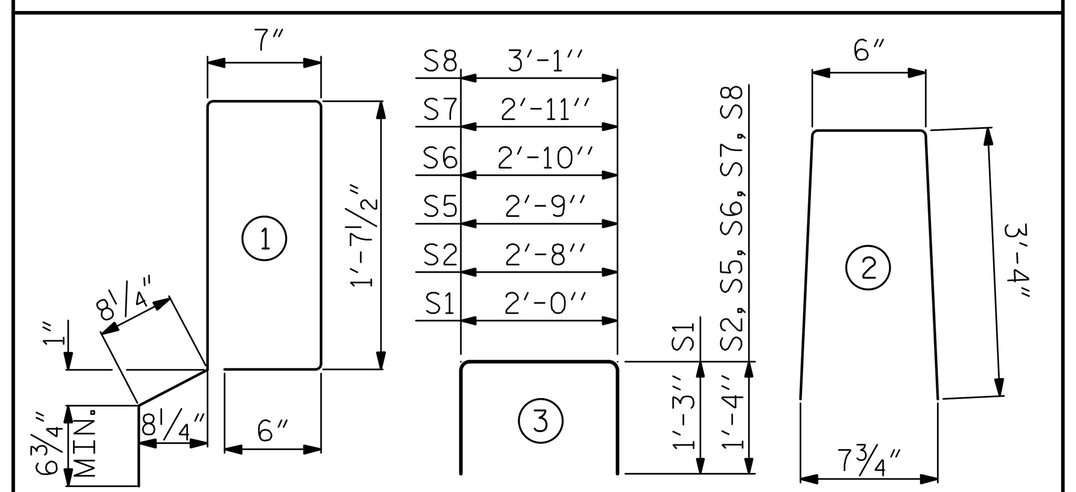

ALL BAR DIMENSIONS ARE OUT TO OUT

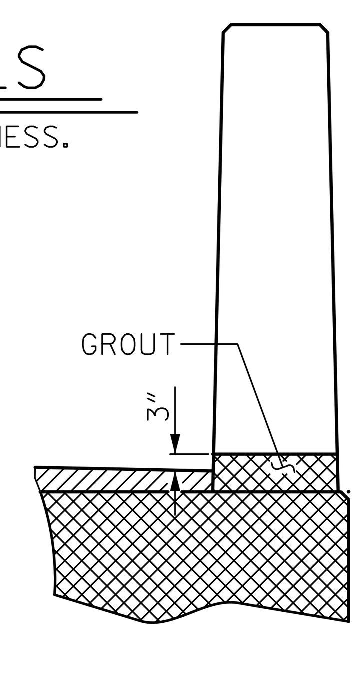

SECTION T-T

AT OPEN JOINT AT BENT (THIS IS TO BE USED WHERE FOAM JOINT IS NOT USED)

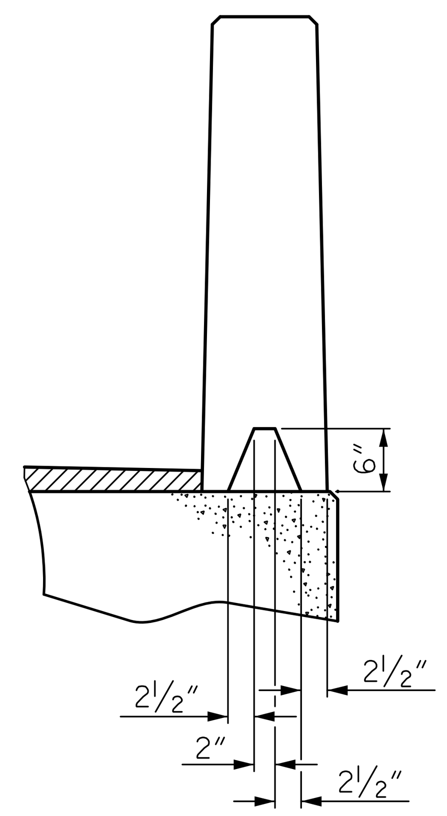

SECTION S-S

AT DAM IN OPEN JOINT (THIS IS TO BE USED ONLY WHEN SLIP FORM IS USED)

GUTTERLINE ASPHALT THICKNESS & RAIL HEIGHT

	ASPHALT OVERLAY THICKNESS		RAIL HEIGHT	
	@ MID-SPAN		@ MID-SPAN	
	LEFT	RIGHT	LEFT	RIGHT
40′ UNIT (SPAN A)	2 1/8″	2 1/2″	3′-8 1/8″	3′-8 1/2″
40′ UNIT (SPAN B)	2 3/8″	2 1/4″	3′-8 3/8″	3′-8 1/4″
50′ UNIT (SPAN C)	2 5/8″	1 7/8″	3′-8 5/8″	3′-7 7/8″

BILL OF MATERIAL FOR VERTICAL CONCRETE BARRIER RAIL

BAR	BARS PER PAIR OF EXTERIOR UNITS	TOTAL NO.	SIZE	TYPE	LENGTH	WEIGHT
	40′ UNIT					
* B11	80	160	#5	STR	11′-9″	1960
* S4	100	200	#5	2	7′-2″	1494
* EPOXY COATED REINFORCING STEEL			LBS.			3454
CLASS AA CONCRETE			CU.YDS.			20.4
TOTAL VERTICAL CONCRETE BARRIER RAIL			LN. FT.			160.58

BILL OF MATERIAL FOR VERTICAL CONCRETE BARRIER RAIL

BAR	BARS PER PAIR OF EXTERIOR UNITS	TOTAL NO.	SIZE	TYPE	LENGTH	WEIGHT
	50′ UNIT					
* B13	80	80	#5	STR	14′-3″	1189
* S4	120	120	#5	2	7′-2″	897
* EPOXY COATED REINFORCING STEEL			LBS.			2086
CLASS AA CONCRETE			CU.YDS.			12.8
TOTAL VERTICAL CONCRETE BARRIER RAIL			LN. FT.			100.29

CONCRETE RELEASE STRENGTH

UNIT	PSI
40′ UNITS	4000
50′ UNITS	4900

CORED SLABS REQUIRED

	NUMBER	LENGTH	TOTAL LENGTH
40′ UNIT			
EXTERIOR C.S.	4	40′-0″	160′-0″
INTERIOR C.S.	18	40′-0″	720′-0″
TOTAL	22		880′-0″

CORED SLABS REQUIRED

	NUMBER	LENGTH	TOTAL LENGTH
50′ UNIT			
EXTERIOR C.S.	2	50′-0″	100′-0″
INTERIOR C.S.	9	50′-0″	450′-0″
TOTAL	11		550′-0″

GRADE 270 STRANDS

	0.6″ Ø L.R.
AREA (SQUARE INCHES)	0.217
ULTIMATE STRENGTH (LBS. PER STRAND)	58,600
APPLIED PRESTRESS (LBS. PER STRAND)	43,950

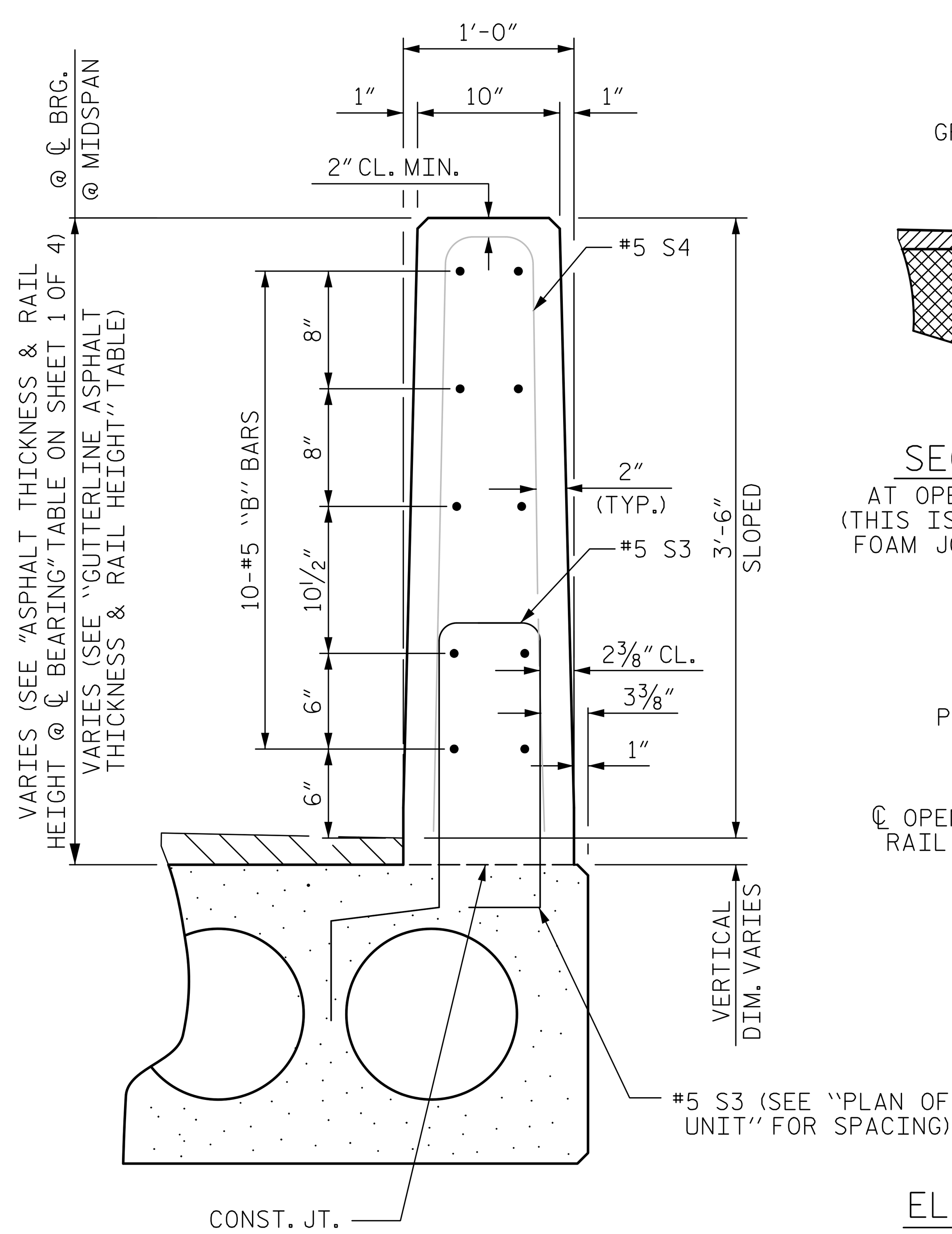

VERTICAL CONCRETE BARRIER RAIL SECTION

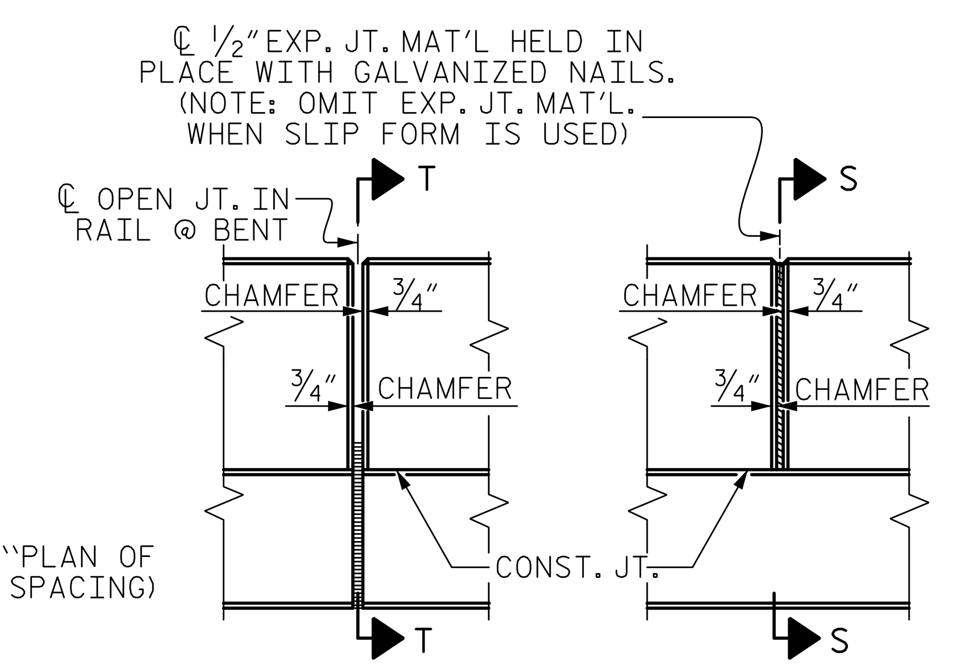

ELEVATION AT EXPANSION JOINTS

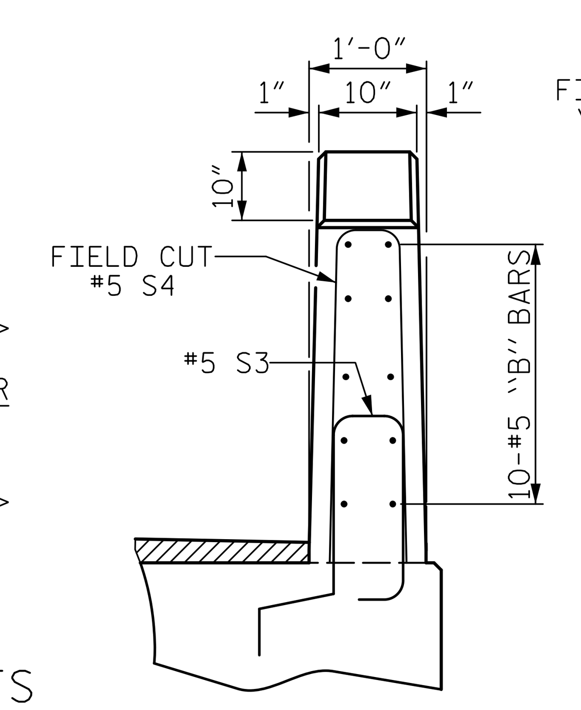

END VIEW

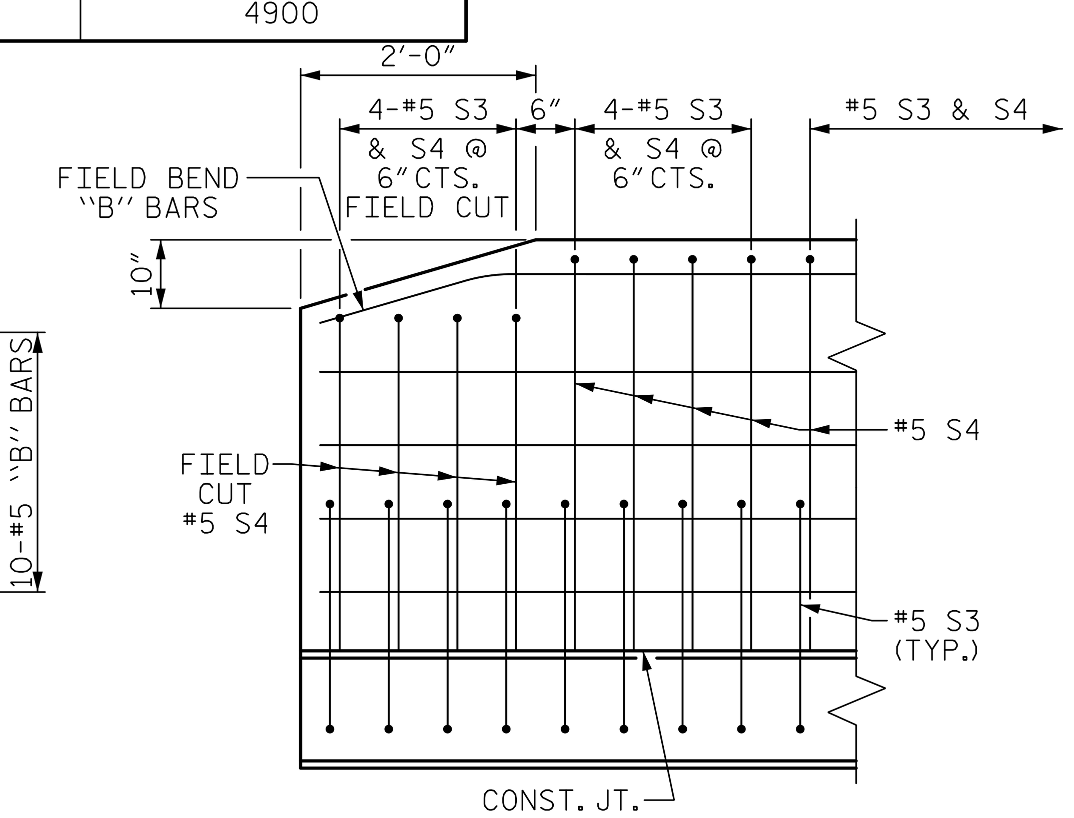

SIDE VIEW

END OF RAIL DETAILS

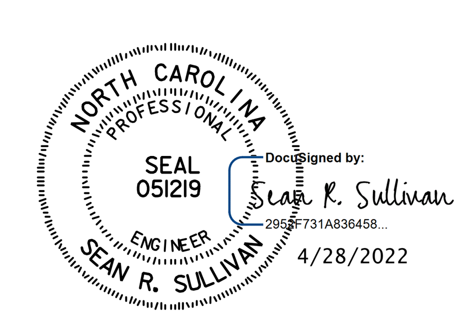

PROJECT NO. B-5996

BRUNSWICK COUNTY

STATION: 18+62.00 -L-

SHEET 4 OF 4

STATE OF NORTH CAROLINA
DEPARTMENT OF TRANSPORTATION
RALEIGH

STANDARD
3′-0″ X 1′-9″ PRESTRESSED CONCRETE CORED SLAB UNIT 60° SKEW

ASSEMBLED BY : M. WRIGHT	DATE : 12/21
CHECKED BY : S. SULLIVAN	DATE : 2/22
DRAWN BY : DGE 5/09	REV. 5/18 MAA/THC
CHECKED BY : BCH 6/09	

4/28/2022
3:02:59 PM
...\401_017_B5996_SMU_CS04_009_090126.dgn

DOCUMENT NOT CONSIDERED FINAL UNLESS ALL SIGNATURES COMPLETED

HNTB NORTH CAROLINA, P.C.
NC License No. C-1554
343 E. Six Forks Rd., Suite 200, Raleigh, N.C. 27609

DRAWN BY	M. WRIGHT	DATE 12/21	DWG. NO. 9
CHECKED BY	S. SULLIVAN	DATE 2/22	
DESIGN ENGINEER OF RECORD	S. SULLIVAN	DATE 3/22	

REVISIONS							SHEET NO.
NO.	BY	DATE		NO.	BY	DATE	S-9
1				3			TOTAL SHEETS
2				4			19

STD. NO. 21″PCS3_33_60S

DocuSign Envelope ID: 2F119F11-162E-40A6-8315-83B74791BECE

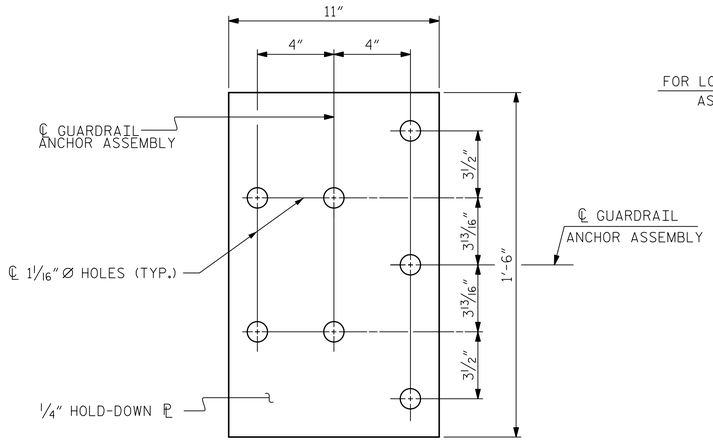

PLAN

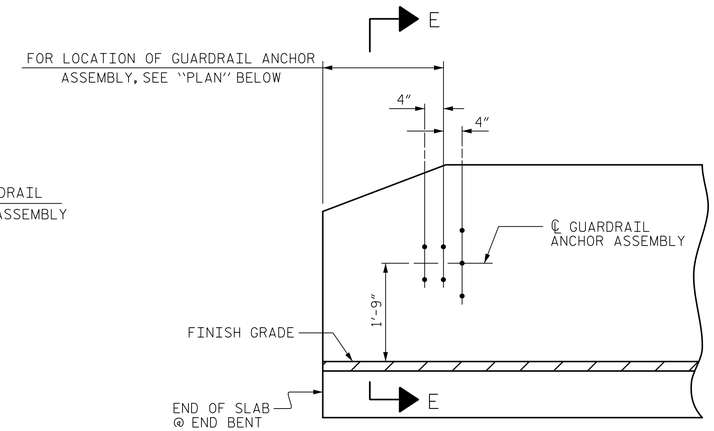

ELEVATION

NOTES

THE GUARDRAIL ANCHOR ASSEMBLY SHALL CONSIST OF A 1/4" HOLD DOWN PLATE AND 7 - 7/8" Ø BOLTS WITH NUTS AND WASHERS.

THE HOLD-DOWN PLATE SHALL CONFORM TO AASHTO M270 GRADE 36. AFTER FABRICATION, THE HOLD-DOWN PLATE SHALL BE HOT-DIP GALVANIZED IN ACCORDANCE WITH AASHTO M111.

BOLTS SHALL CONFORM TO THE REQUIREMENTS OF ASTM A307 AND NUTS SHALL CONFORM TO THE REQUIREMENTS OF AASHTO M291. BOLTS, NUTS AND WASHERS SHALL BE GALVANIZED. (AT THE CONTRACTOR'S OPTION, STAINLESS STEEL BOLTS, NUTS AND WASHERS MAY BE USED AS AN ALTERNATE FOR THE 7/8" Ø GALVANIZED BOLTS, NUTS AND WASHERS. THEY SHALL CONFORM TO OR EXCEED THE MECHANICAL REQUIREMENTS OF ASTM A307. THE USE OF THIS ALTERNATE SHALL BE APPROVED BY THE ENGINEER.)

THE GUARDRAIL ANCHOR ASSEMBLY IS REQUIRED AT ALL POINTS WHERE APPROACH GUARDRAIL IS TO BE ATTACHED TO THE END OF BARRIER RAIL. FOR POINTS OF ATTACHMENT, SEE SKETCH.

AFTER INSTALLATION, THE EXPOSED THREAD OF THE BOLT SHALL BE BURRED WITH A SHARP POINTED TOOL.

THE COST OF THE GUARDRAIL ANCHOR ASSEMBLY SHALL BE INCLUDED IN THE UNIT CONTRACT PRICE BID FOR VERTICAL CONCRETE BARRIER RAIL.

THE VERTICAL REINFORCING BARS MAY BE SHIFTED SLIGHTLY IN THE VERTICAL CONCRETE BARRIER RAIL TO CLEAR ASSEMBLY BOLTS.

THE 1 1/4" Ø HOLES SHALL BE FORMED OR DRILLED WITH A CORE BIT. IMPACT TOOLS WILL NOT BE PERMITTED. ANY CONCRETE DAMAGED BY THIS WORK SHALL BE REPAIRED TO THE SATISFACTION OF THE ENGINEER.

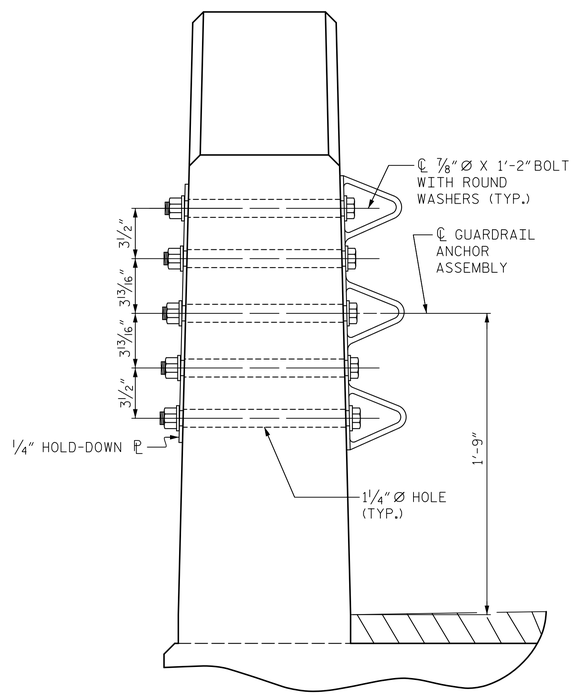

SECTION E-E

GUARDRAIL ANCHOR ASSEMBLY DETAILS

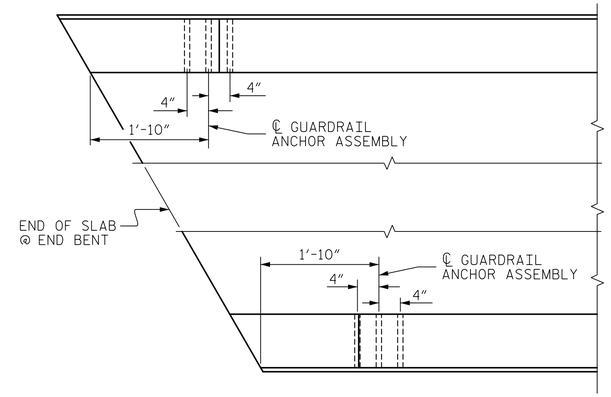

LOCATION OF ANCHORS FOR GUARDRAIL

END BENT #1 SHOWN, END BENT #2 SIMILAR.

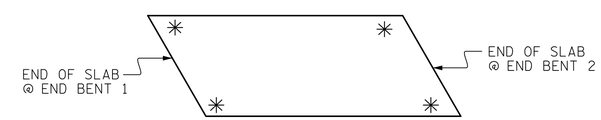

SKETCH SHOWING POINTS OF ATTACHMENT

✳ DENOTES GUARDRAIL ANCHOR ASSEMBLY

PROJECT NO. B-5996

BRUNSWICK COUNTY

STATION: 18+62.00 -L-

NORTH CAROLINA PROFESSIONAL SEAL 051219 ENGINEER SEAN R. SULLIVAN

DocuSigned by: Sean R. Sullivan 2B0DF731A836458... 4/28/2022

STATE OF NORTH CAROLINA
DEPARTMENT OF TRANSPORTATION
RALEIGH

STANDARD
GUARDRAIL ANCHORAGE DETAILS FOR VERTICAL CONCRETE BARRIER RAIL

REVISIONS						SHEET NO.
NO.	BY	DATE	NO.	BY	DATE	S-10
1			3			TOTAL SHEETS
2			4			19

HNTB NORTH CAROLINA, P.C.
NC License No. C-1554
343 E. Six Forks Rd., Suite 200, Raleigh, N.C. 27609

DRAWN BY M. WRIGHT DATE 12/21
CHECKED BY S. SULLIVAN DATE 2/22
DESIGN ENGINEER OF RECORD S. SULLIVAN DATE 3/22
DWG. NO. 10

DOCUMENT NOT CONSIDERED FINAL UNLESS ALL SIGNATURES COMPLETED

ASSEMBLED BY : M. WRIGHT DATE : 12/21
CHECKED BY : S. SULLIVAN DATE : 2/22

DRAWN BY : MAA 5/10
CHECKED BY : GM 5/10

REV. 1/15 MAA/TMG
REV. 12/17 MAA/THC
REV. 5/18 MAA/THC

4/28/2022 3:06:05 PM
_1401_019_B5996_SMU_GR01_010_090126.dgn

STD. NO. GRA3(SHT 1a)

DocuSign Envelope ID: 2F119F11-162E-40A6-8315-83B74791BECE

NOTES

STIRRUPS IN CAP MAY BE SHIFTED AS NECESSARY TO CLEAR DOWELS.

THE CONCRETE IN THE SHADED AREA OF THE WING SHALL BE POURED AFTER THE VERTICAL CONCRETE BARRIER RAIL IS CAST IF SLIP FORMING IS USED.

FOR PILE SPLICE DETAILS, SEE SHEET 4 OF 4.

FOR WING DETAILS, SEE SHEET 3 OF 4.

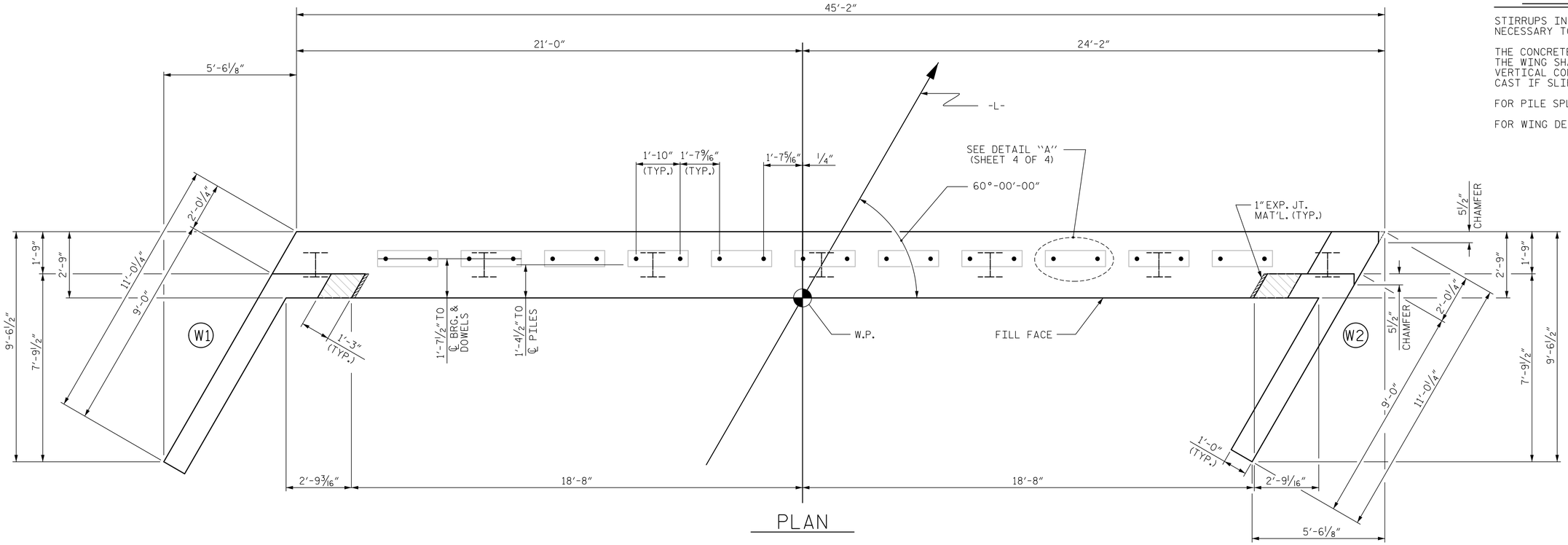

PLAN

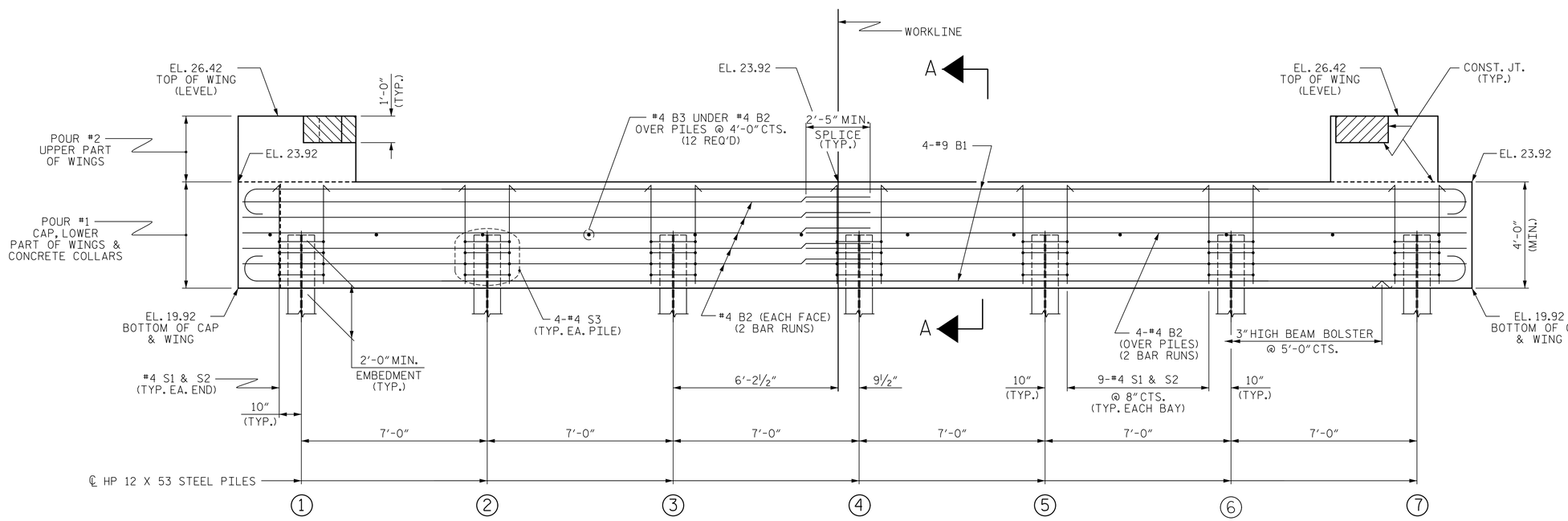

ELEVATION

WINGS NOT SHOWN FOR CLARITY.
FOR SECTION A-A, SEE SHEET 4 OF 4.
CONCRETE COLLARS FOR STEEL PILES NOT SHOWN IN PLAN AND ELEVATION VIEWS FOR CLARITY.
SEE "CORROSION PROTECTION FOR STEEL PILES DETAIL", SHEET 4 OF 4.

NORTH CAROLINA PROFESSIONAL SEAL 051219 ENGINEER SEAN R. SULLIVAN

DocuSigned by: Sean R. Sullivan 2B8F731A836458... 4/28/2022

PROJECT NO. B-5996
BRUNSWICK COUNTY
STATION: 18+62.00 -L-

SHEET 1 OF 4

STATE OF NORTH CAROLINA
DEPARTMENT OF TRANSPORTATION
RALEIGH

SUBSTRUCTURE
END BENT No. 1

ASSEMBLED BY : M. WRIGHT	DATE : 12/21		
CHECKED BY : S. SULLIVAN	DATE : 3/22		
DRAWN BY : WJH 12/11	REV. 4/15	MAA/TMG	
CHECKED BY : AAC 12/11			

DOCUMENT NOT CONSIDERED FINAL UNLESS ALL SIGNATURES COMPLETED

HNTB NORTH CAROLINA, P.C.
NC License No. C-1554
343 E. Six Forks Rd., Suite 200, Raleigh, N.C. 27609

DRAWN BY	M. WRIGHT	DATE	12/21
CHECKED BY	S. SULLIVAN	DATE	3/22
DESIGN ENGINEER OF RECORD	S. SULLIVAN	DATE	3/22

DWG. NO. 11

REVISIONS						SHEET NO.
NO.	BY	DATE	NO.	BY	DATE	S-11
1			3			TOTAL SHEETS
2			4			19

STD. NO. EB_33_60S4

4/28/2022 3:06:11 PM
_V01_021_B5996_SMU_E01_011_090126.dgn

DocuSign Envelope ID: 2F119F11-162E-40A6-8315-83B74791BECE

NOTES

STIRRUPS IN CAP MAY BE SHIFTED AS NECESSARY TO CLEAR DOWELS.

THE CONCRETE IN THE SHADED AREA OF THE WING SHALL BE POURED AFTER THE VERTICAL CONCRETE BARRIER RAIL IS CAST IF SLIP FORMING IS USED.

FOR PILE SPLICE DETAILS, SEE SHEET 4 OF 4.

FOR WING DETAILS, SEE SHEET 3 OF 4.

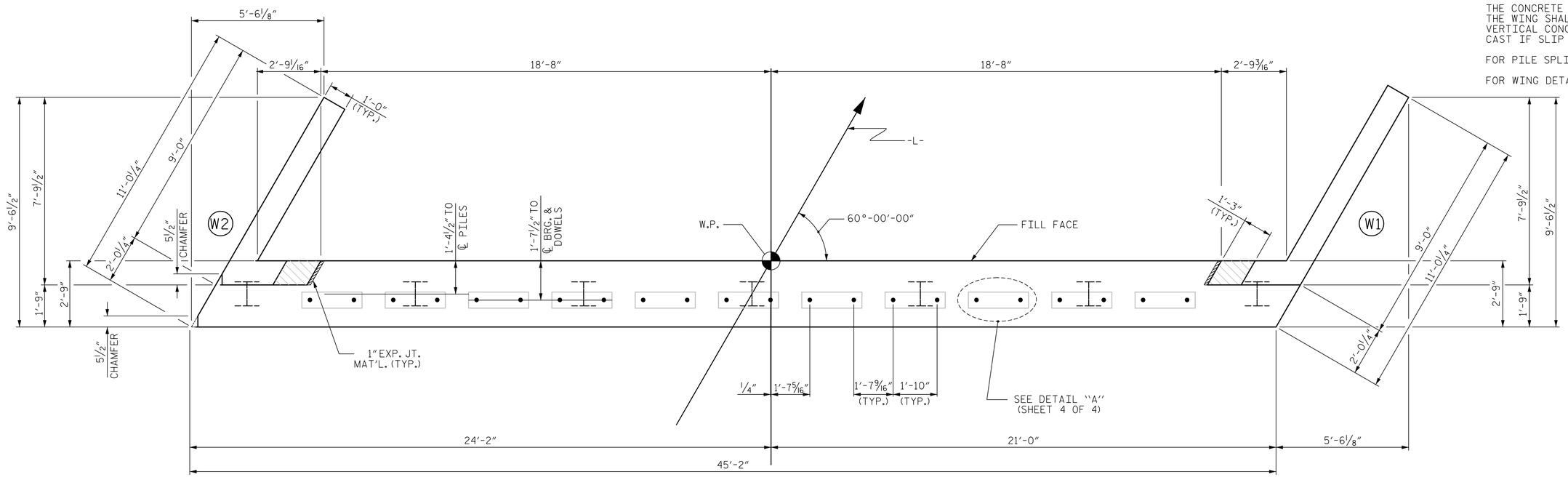

PLAN

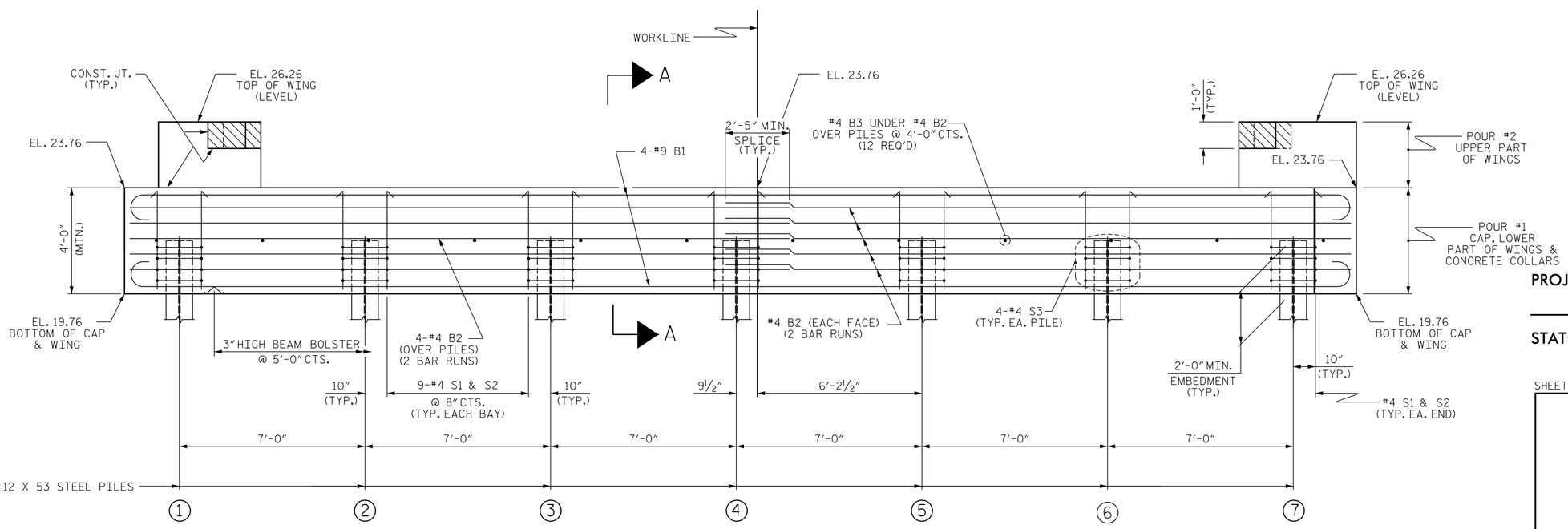

ELEVATION

WINGS NOT SHOWN FOR CLARITY.
FOR SECTION A-A, SEE SHEET 4 OF 4.
CONCRETE COLLARS FOR STEEL PILES NOT SHOWN IN PLAN AND ELEVATION VIEWS FOR CLARITY.
SEE "CORROSION PROTECTION FOR STEEL PILES DETAIL", SHEET 4 OF 4.

DOCUMENT NOT CONSIDERED FINAL UNLESS ALL SIGNATURES COMPLETED

NORTH CAROLINA PROFESSIONAL SEAL 051219 ENGINEER SEAN R. SULLIVAN

DocuSigned by: Sean R. Sullivan 2955B731A836458... 4/28/2022

PROJECT NO. B-5996
BRUNSWICK COUNTY
STATION: 18+62.00 -L-

SHEET 2 OF 4

STATE OF NORTH CAROLINA
DEPARTMENT OF TRANSPORTATION
RALEIGH

SUBSTRUCTURE
END BENT No. 2

ASSEMBLED BY : M. WRIGHT	DATE : 12/21		
CHECKED BY : S. SULLIVAN	DATE : 3/22		
DRAWN BY : WJH 12/11	REV. 4/15	MAA/TMG	
CHECKED BY : AAC 12/11			

HNTB NORTH CAROLINA, P.C.
NC License No. C-1554
343 E. Six Forks Rd., Suite 200, Raleigh, N.C. 27609

DRAWN BY	M. WRIGHT	DATE	12/21
CHECKED BY	S. SULLIVAN	DATE	3/22
DESIGN ENGINEER OF RECORD	S. SULLIVAN	DATE	3/22

DWG. NO. 12

REVISIONS						SHEET NO.
NO.	BY	DATE	NO.	BY	DATE	S-12
1			3			TOTAL SHEETS
2			4			19

STD. NO. EB_33_60S4

4/28/2022 3:06:16 PM
_MOT_D23_B5996_SMU_E02_012_090126.dgn

DocuSign Envelope ID: 2F119F11-162E-40A6-8315-83B74791BECE

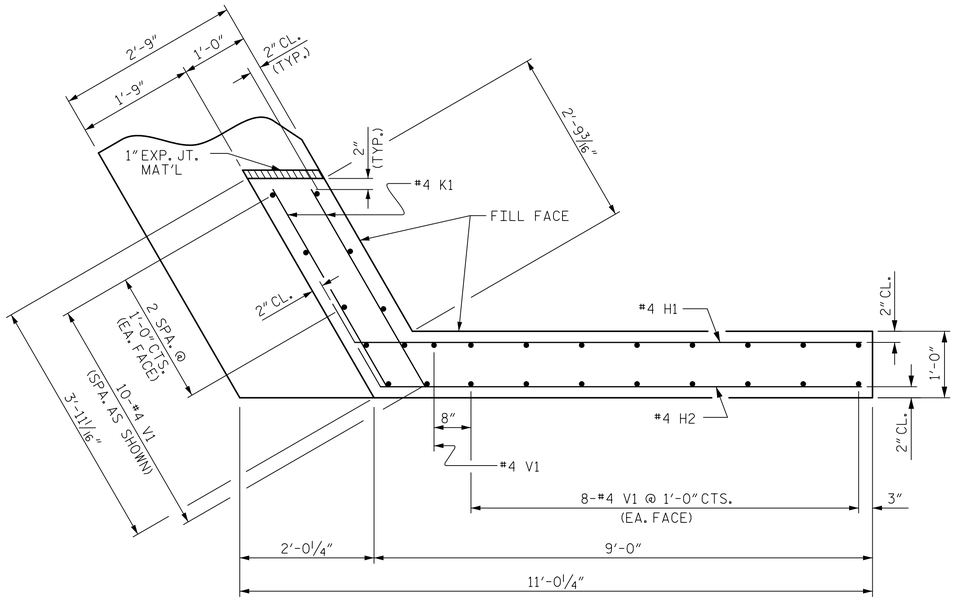

PLAN OF WING (W1)

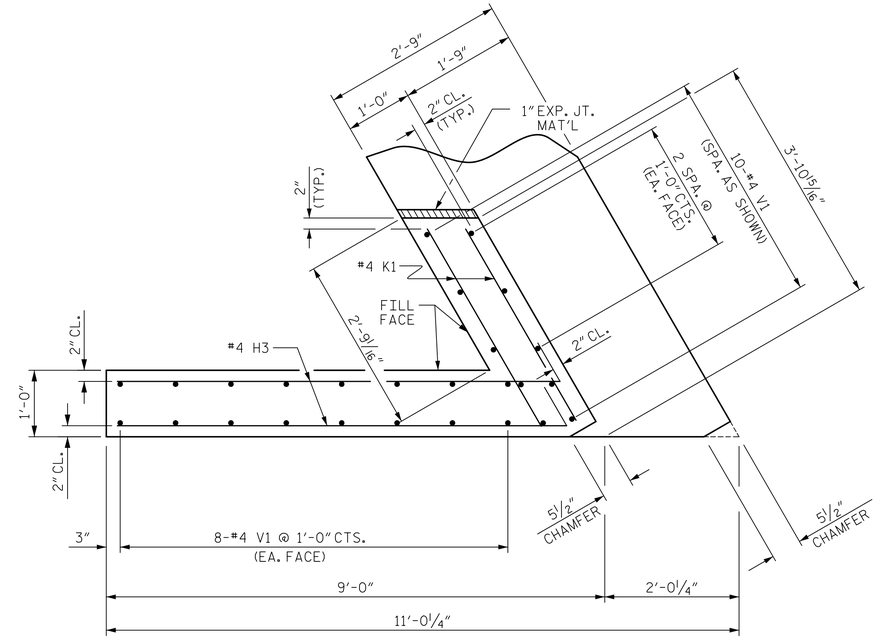

PLAN OF WING (W2)

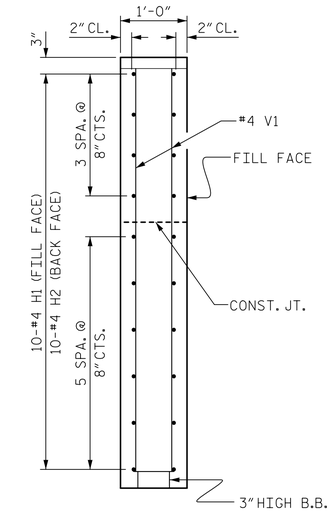

SECTION X-X

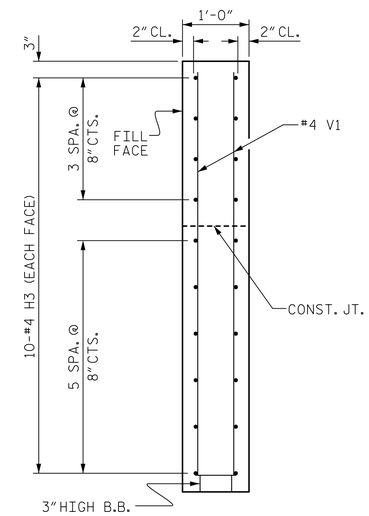

SECTION Y-Y

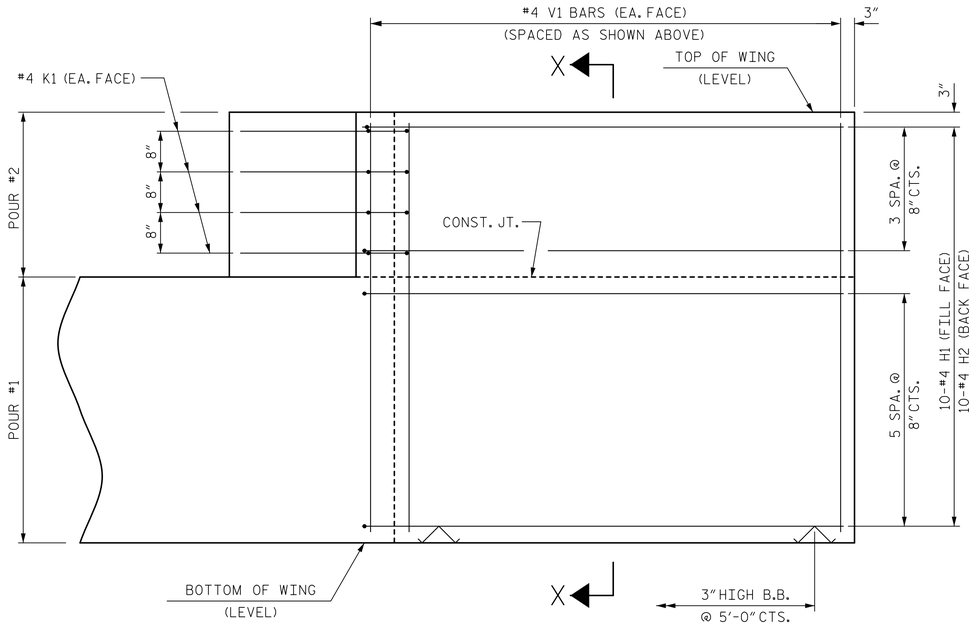

ELEVATION OF WING (W1)

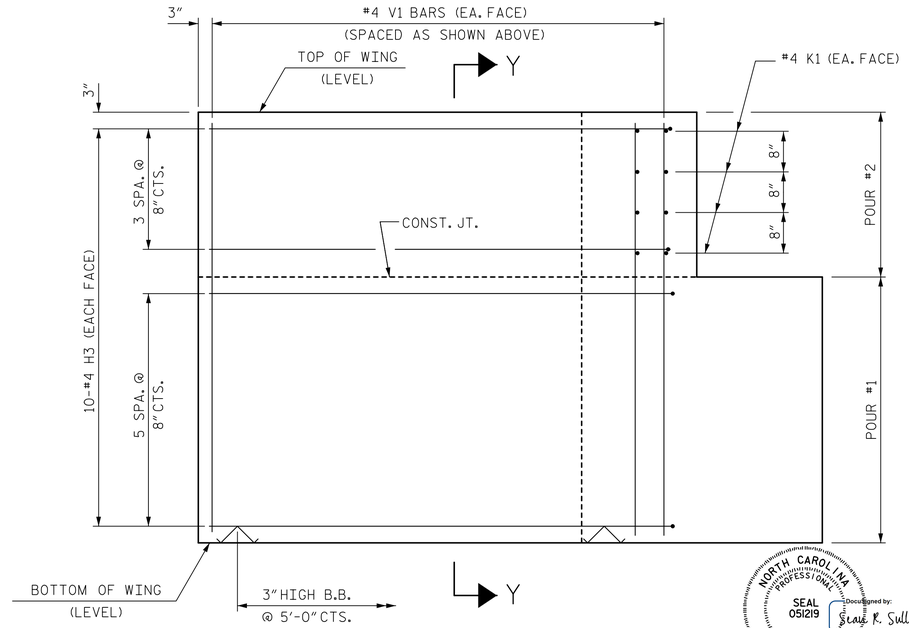

ELEVATION OF WING (W2)

NORTH CAROLINA PROFESSIONAL SEAL 051219 ENGINEER SEAN R. SULLIVAN

DocuSigned by: Sean R. Sullivan 4/28/2022

PROJECT NO. B-5996

BRUNSWICK COUNTY

STATION: 18+62.00 -L-

SHEET 3 OF 4

STATE OF NORTH CAROLINA
DEPARTMENT OF TRANSPORTATION
RALEIGH

SUBSTRUCTURE
END BENT
WING DETAILS

WING DETAILS

ASSEMBLED BY : M. WRIGHT	DATE : 12/21		
CHECKED BY : S. SULLIVAN	DATE : 3/22		
DRAWN BY : WJH 12/11	REV. 4/15 MAA/TMG		
CHECKED BY : AAC 12/11			

DOCUMENT NOT CONSIDERED FINAL UNLESS ALL SIGNATURES COMPLETED

HNTB NORTH CAROLINA, P.C.
NC License No. C-1554
343 E. Six Forks Rd., Suite 200, Raleigh, N.C. 27609

DRAWN BY	M. WRIGHT	DATE	12/21
CHECKED BY	S. SULLIVAN	DATE	3/22
DESIGN ENGINEER OF RECORD	S. SULLIVAN	DATE	3/22

DWG. NO. 13

REVISIONS						SHEET NO.
NO.	BY	DATE	NO.	BY	DATE	S-13
1			3			TOTAL SHEETS
2			4			19

STD. NO. EB_33_60S4

4/28/2022 3:06:22 PM
_W01_025_B5996_SWI_E03_013_090126.dgn

DocuSign Envelope ID: 2F119F11-162E-40A6-8315-83B74791BECE

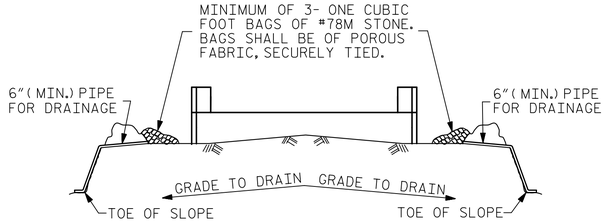

BAGGED STONE AND PIPE SHALL BE PLACED IMMEDIATELY AFTER COMPLETION OF END BENT EXCAVATION. PIPE MAY BE EITHER CONCRETE, CORRUGATED STEEL, CORRUGATED ALUMINUM ALLOY, OR CORRUGATED PLASTIC. PERFORATED PIPE WILL NOT BE ALLOWED.

BAGGED STONE SHALL REMAIN IN PLACE UNTIL THE ENGINEER DIRECTS THAT IT BE REMOVED. THE CONTRACTOR SHALL REMOVE AND DISPOSE OF SILT ACCUMULATIONS AT BAGGED STONE WHEN SO DIRECTED BY THE ENGINEER. BAGS SHALL BE REMOVED AND REPLACED WHENEVER THE ENGINEER DETERMINES THAT THEY HAVE DETERIORATED AND LOST THEIR EFFECTIVENESS.

NO SEPARATE PAYMENT WILL BE MADE FOR THIS WORK AND THE ENTIRE COST OF THIS WORK SHALL BE INCLUDED IN THE UNIT CONTRACT PRICE BID FOR THE SEVERAL PAY ITEMS.

TEMPORARY DRAINAGE AT END BENT

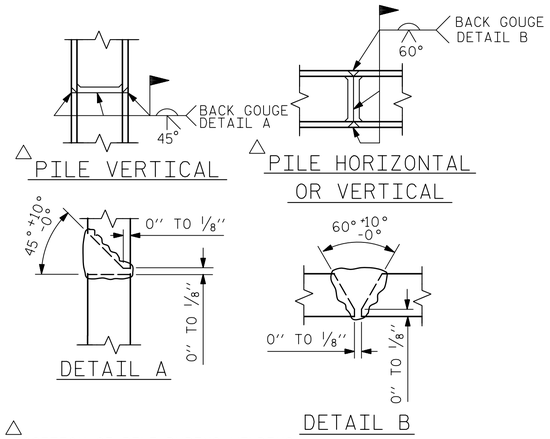

△ POSITION OF PILE DURING WELDING.

PILE SPLICE DETAILS

BAR TYPES

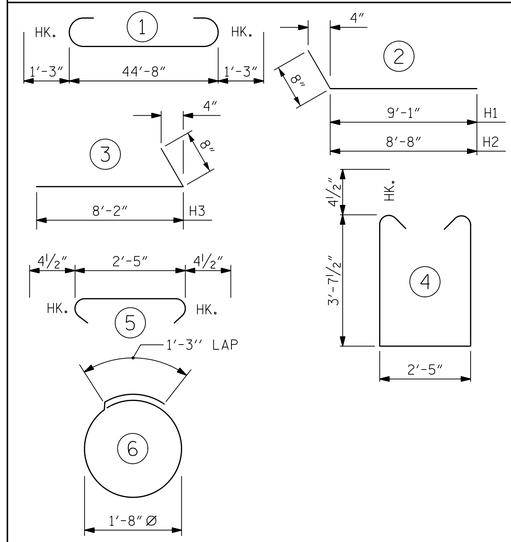

ALL BAR DIMENSIONS ARE OUT TO OUT.

BILL OF MATERIAL
FOR ONE END BENT

BAR	NO.	SIZE	TYPE	LENGTH	WEIGHT
B1	8	#9	1	47'-2"	1283
B2	28	#4	STR	23'-8"	443
B3	12	#4	STR	2'-5"	19
D1	22	#6	STR	1'-6"	50
H1	10	#4	2	9'-9"	65
H2	10	#4	2	9'-4"	62
H3	20	#4	3	8'-10"	118
K1	16	#4	STR	3'-3"	35
S1	56	#4	4	10'-5"	390
S2	56	#4	5	3'-2"	118
S3	28	#4	6	6'-6"	122
V1	53	#4	STR	6'-2"	218

REINFORCING STEEL (FOR ONE END BENT) 2923 LBS.

CLASS A CONCRETE BREAKDOWN (FOR ONE END BENT)

POUR #1 CAP, LOWER PART OF WINGS & COLLARS 21.9 C.Y.

POUR #2 UPPER PART OF WINGS 2.2 C.Y.

TOTAL CLASS A CONCRETE 24.1 C.Y.

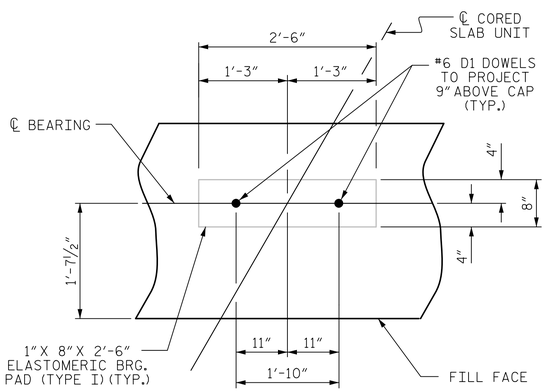

DETAIL "A"

(END BENT No. 1 SHOWN, END BENT No. 2 SIMILAR BY ROTATION)

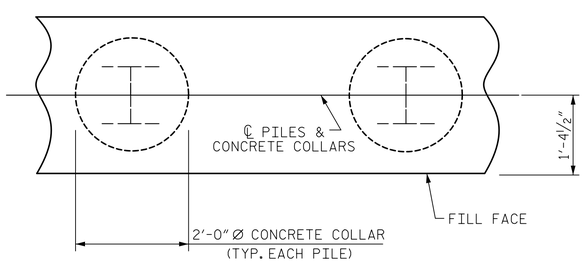

PLAN

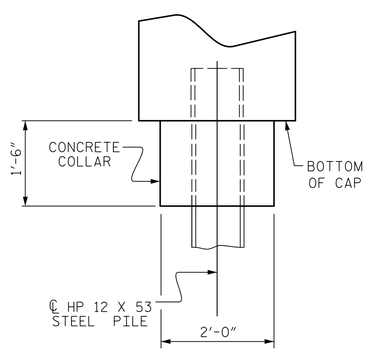

ELEVATION

CORROSION PROTECTION FOR STEEL PILES DETAIL

(END BENT No. 1 SHOWN, END BENT No. 2 SIMILAR BY ROTATION)

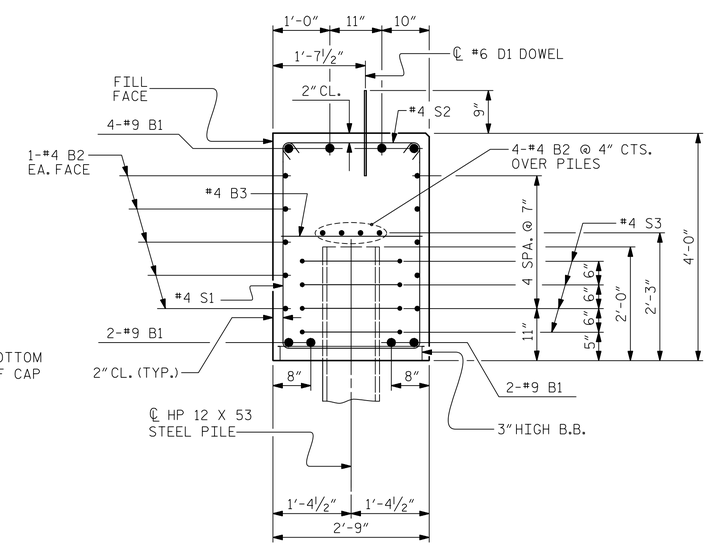

SECTION A-A

(CONCRETE COLLAR NOT SHOWN FOR CLARITY. SEE "CORROSION PROTECTION FOR STEEL PILES DETAIL.")

PROJECT NO. B-5996

BRUNSWICK COUNTY

STATION: 18+62.00 -L-

SHEET 4 OF 4

STATE OF NORTH CAROLINA
DEPARTMENT OF TRANSPORTATION
RALEIGH

SUBSTRUCTURE

END BENT No. 1 & 2 DETAILS

NORTH CAROLINA PROFESSIONAL SEAL 051219 ENGINEER SEAN R. SULLIVAN

DocuSigned by: Sean R. Sullivan 4/28/2022

ASSEMBLED BY : M. WRIGHT	DATE : 12/21
CHECKED BY : S. SULLIVAN	DATE : 3/22
DRAWN BY : WJH 12/11	REV. 4/17 MAA/THC
CHECKED BY : AAC 12/11	

DOCUMENT NOT CONSIDERED FINAL UNLESS ALL SIGNATURES COMPLETED

HNTB NORTH CAROLINA, P.C.
NC License No. C-1554
343 E. Six Forks Rd., Suite 200, Raleigh, N.C. 27609

DRAWN BY M. WRIGHT DATE 12/21
CHECKED BY S. SULLIVAN DATE 3/22
DESIGN ENGINEER OF RECORD S. SULLIVAN DATE 3/22

DWG. NO. 14

REVISIONS						SHEET NO.
NO.	BY	DATE	NO.	BY	DATE	S-14
1			3			TOTAL SHEETS
2			4			19

STD. NO. EB_33_60S4

4/28/2022 3:06:28 PM
J:\401_027_B5996_SWI_EB4_014_DB01.26.dgn

DocuSign Envelope ID: 2F119F11-162E-40A6-8315-83B74791BECE

NOTES

STIRRUPS IN CAP MAY BE SHIFTED AS NECESSARY TO CLEAR DOWELS.

★ INVERT ALTERNATE STIRRUPS.

GALVANIZE THE TOP OF EACH INTERIOR BENT PILE A MINIMUM OF 29 FEET. GALVANIZE IN ACCORDANCE WITH SECTION 1076 OF THE STANDARD SPECIFICATIONS.

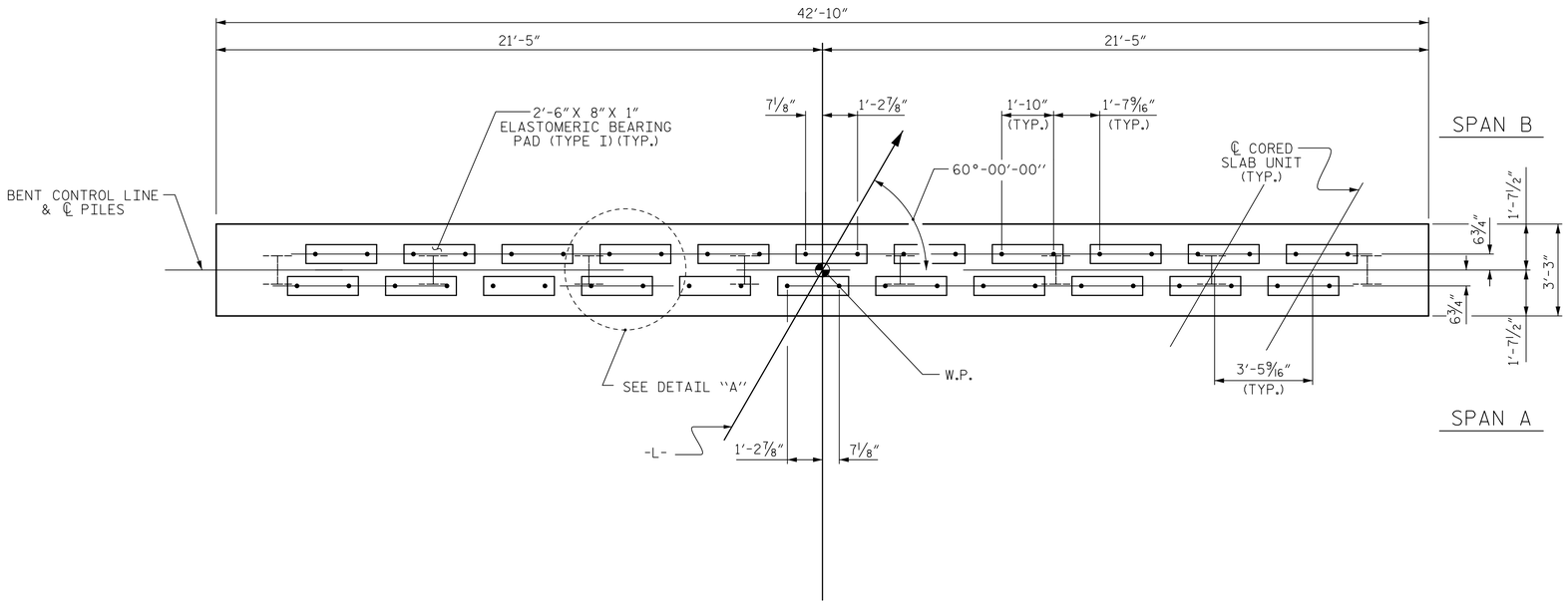

PLAN

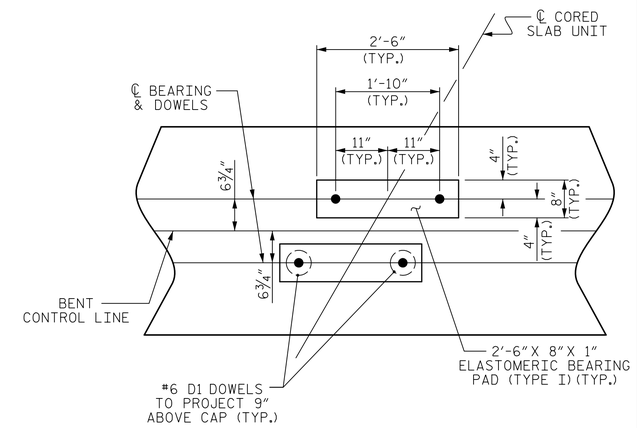

DETAIL "A"

(DIMENSIONS ARE TYPICAL EACH BEARING)

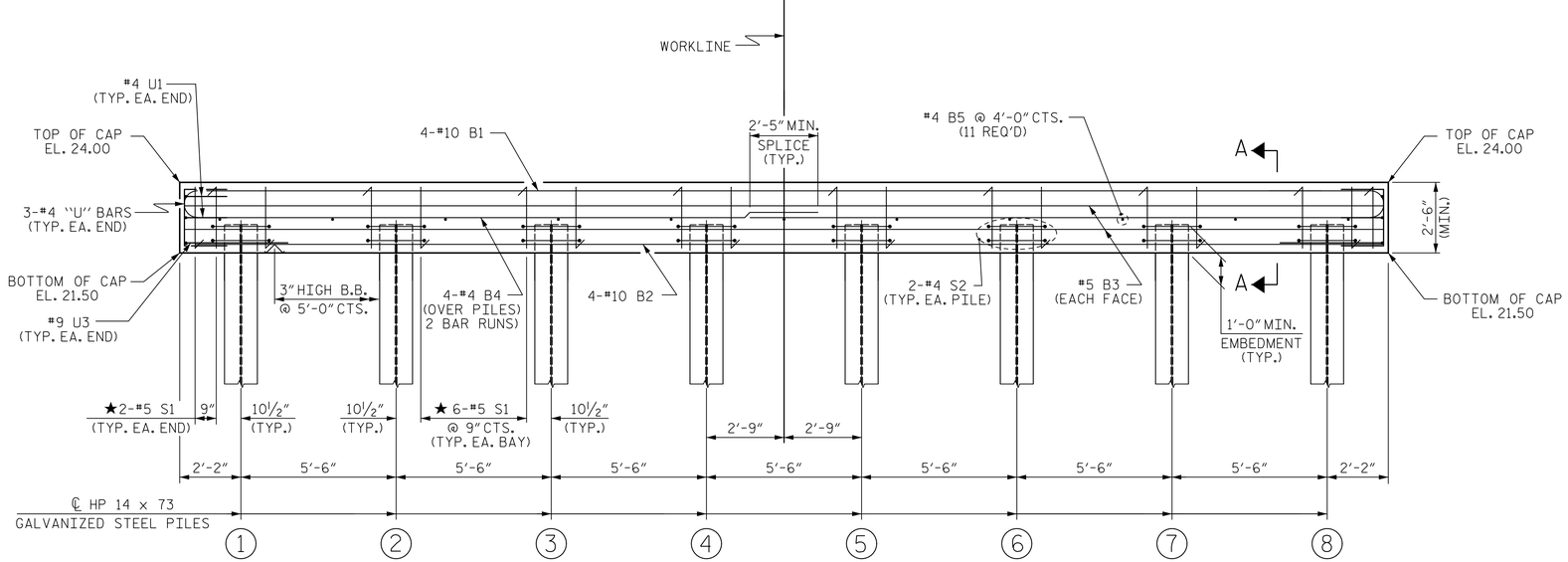

ELEVATION

FOR SECTION A-A, SEE SHEET 3 OF 3

PROJECT NO. B-5996

BRUNSWICK COUNTY

STATION: 18+62.00 -L-

SHEET 1 OF 3

STATE OF NORTH CAROLINA
DEPARTMENT OF TRANSPORTATION
RALEIGH

SUBSTRUCTURE

BENT No. 1

NORTH CAROLINA PROFESSIONAL SEAL 051219 ENGINEER SEAN R. SULLIVAN

DocuSigned by: Sean R. Sullivan 4/28/2022

ASSEMBLED BY : M. WRIGHT	DATE : 3/22		
CHECKED BY : S. SULLIVAN	DATE : 3/22		
DRAWN BY : DGE 05/10	REV. 6/17	MAA/THC	
CHECKED BY : MKT 05/10			

DOCUMENT NOT CONSIDERED FINAL UNLESS ALL SIGNATURES COMPLETED

HNTB NORTH CAROLINA, P.C.
NC License No. C-1554
343 E. Six Forks Rd., Suite 200, Raleigh, N.C. 27609

DRAWN BY	M. WRIGHT	DATE	3/22
CHECKED BY	S. SULLIVAN	DATE	3/22
DESIGN ENGINEER OF RECORD	S. SULLIVAN	DATE	3/22

DWG. NO. 15

REVISIONS						SHEET NO.
NO.	BY	DATE	NO.	BY	DATE	S-15
1			3			TOTAL SHEETS
2			4			19

STD. NO. 14" HP_BT_33_60S_<60'

4/28/2022 3:06:33 PM
...\401_029_B5996_SMU_B01_015_090126.dgn

DocuSign Envelope ID: 2F119F11-162E-40A6-8315-83B74791BECE

NOTES

STIRRUPS IN CAP MAY BE SHIFTED AS NECESSARY TO CLEAR DOWELS.

★ INVERT ALTERNATE STIRRUPS.

GALVANIZE THE TOP OF EACH INTERIOR BENT PILE A MINIMUM OF 31 FEET. GALVANIZE IN ACCORDANCE WITH SECTION 1076 OF THE STANDARD SPECIFICATIONS.

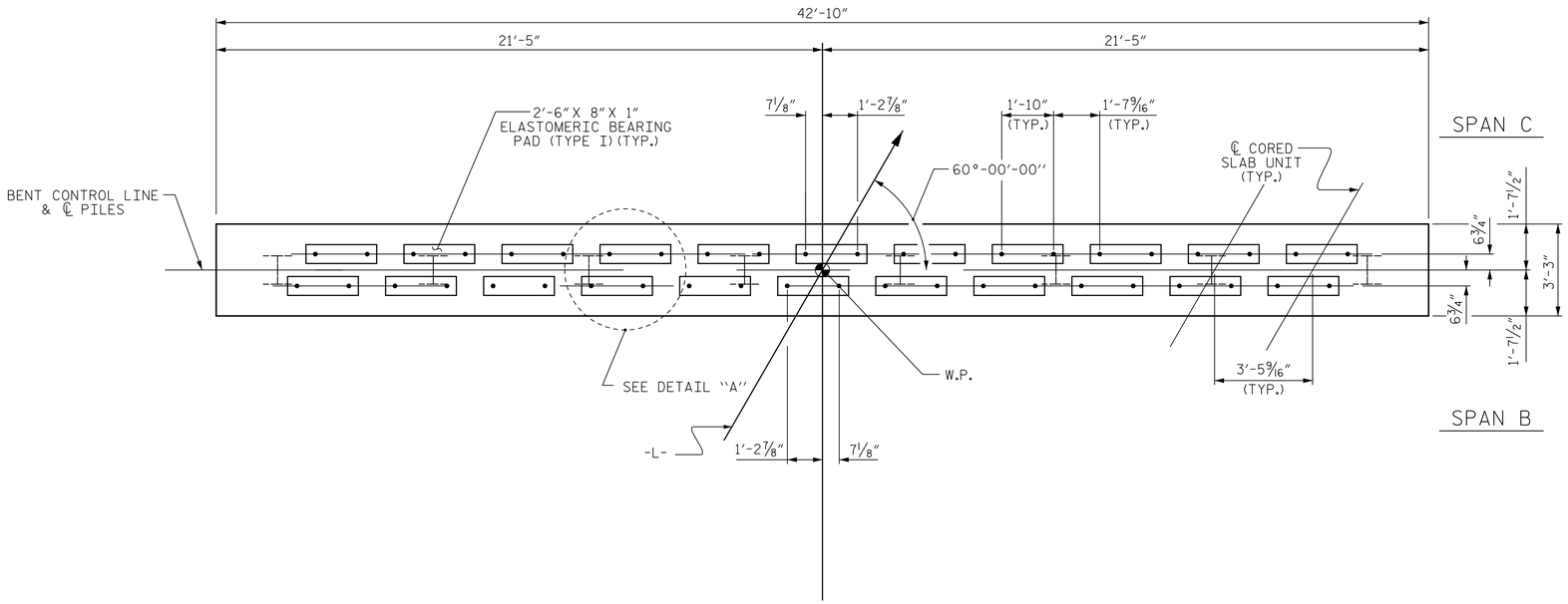

PLAN

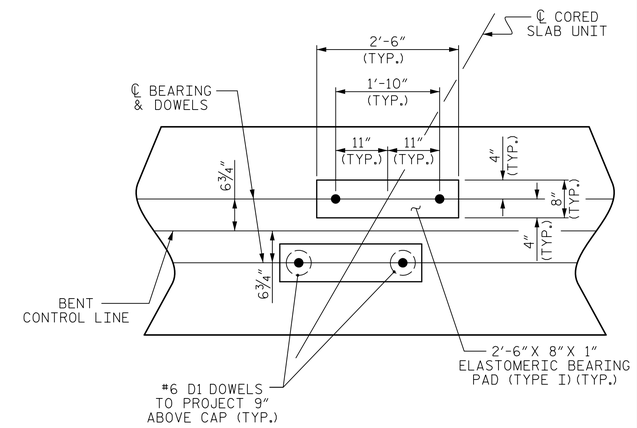

DETAIL "A"

(DIMENSIONS ARE TYPICAL EACH BEARING)

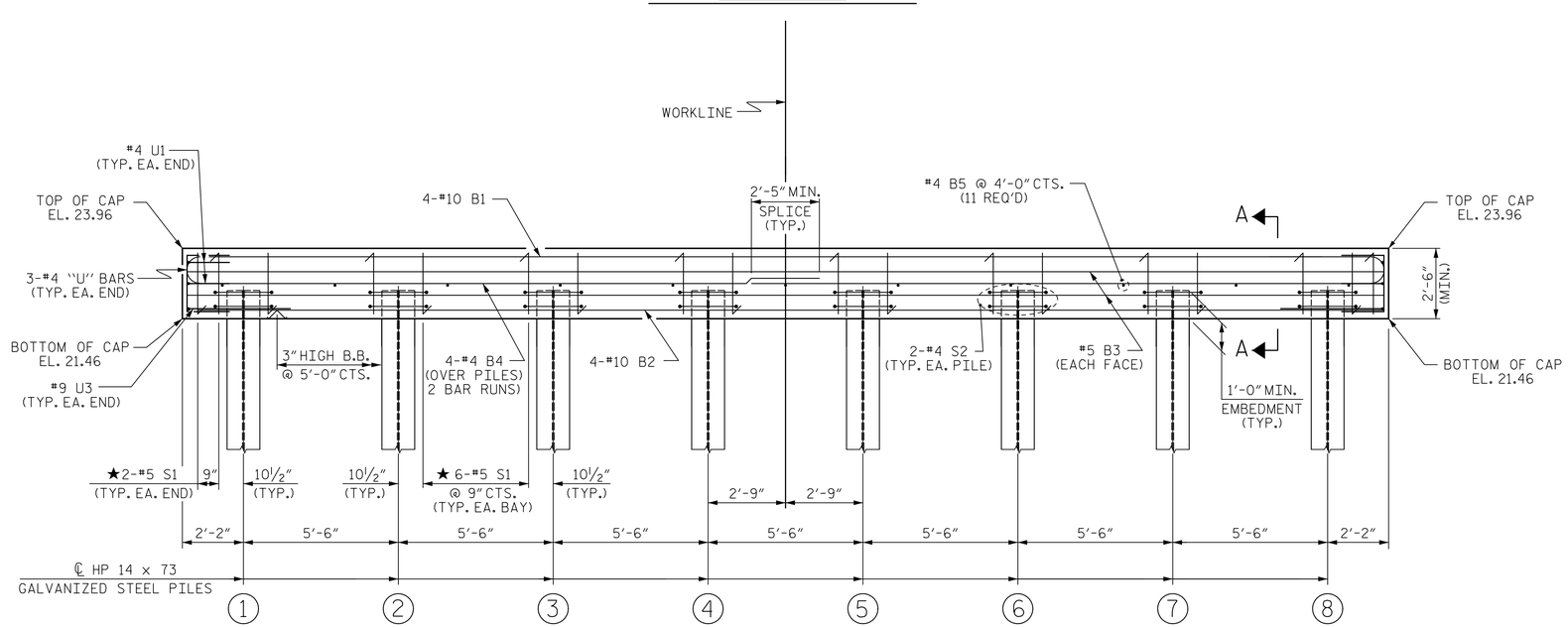

ELEVATION

FOR SECTION A-A, SEE SHEET 3 OF 3

PROJECT NO. B-5996

BRUNSWICK COUNTY

STATION: 18+62.00 -L-

SHEET 2 OF 3

STATE OF NORTH CAROLINA
DEPARTMENT OF TRANSPORTATION
RALEIGH

SUBSTRUCTURE

BENT No. 2

NORTH CAROLINA PROFESSIONAL SEAL 051219 ENGINEER SEAN R. SULLIVAN

DocuSigned by: Sean R. Sullivan 2A6BF731A83B458... 4/28/2022

ASSEMBLED BY : M. WRIGHT	DATE : 3/22
CHECKED BY : S. SULLIVAN	DATE : 3/22
DRAWN BY : DGE 05/10	REV. 6/17 MAA/THC
CHECKED BY : MKT 05/10	

DOCUMENT NOT CONSIDERED FINAL UNLESS ALL SIGNATURES COMPLETED

HNTB NORTH CAROLINA, P.C.
NC License No. C-1554
343 E. Six Forks Rd., Suite 200, Raleigh, N.C. 27609

DRAWN BY	M. WRIGHT	DATE	3/22
CHECKED BY	S. SULLIVAN	DATE	3/22
DESIGN ENGINEER OF RECORD	S. SULLIVAN	DATE	3/22

DWG. NO. 16

REVISIONS						SHEET NO.
NO.	BY	DATE	NO.	BY	DATE	S-16
1			3			TOTAL SHEETS
2			4			19

STD. NO. 14" HP_BT_33_60S_<60'

4/28/2022 3:06:39 PM
_NO1_031_B5996_SMU_B02_016_090126.dgn

DocuSign Envelope ID: 2F119F11-162E-40A6-8315-83B74791BECE

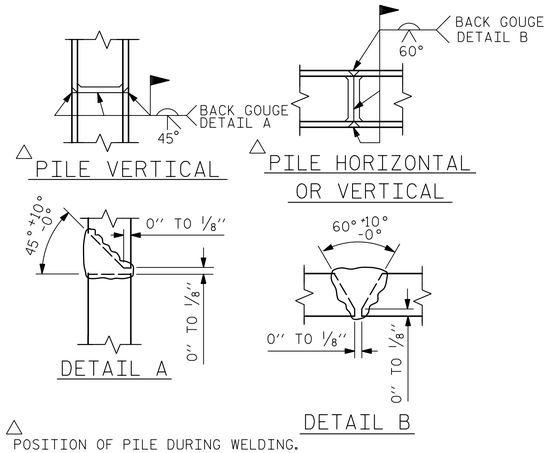

△ POSITION OF PILE DURING WELDING.

PILE SPLICE DETAILS

BAR TYPES

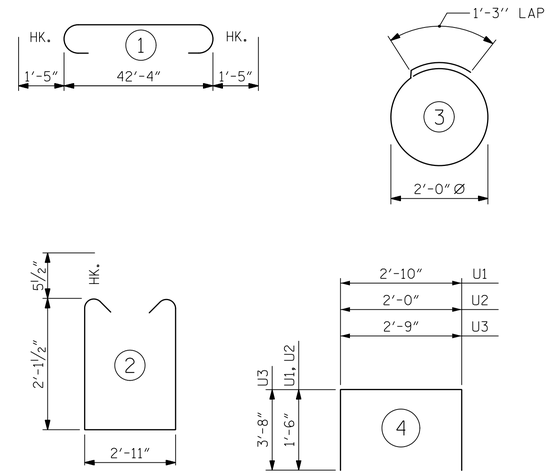

ALL BAR DIMENSIONS ARE OUT TO OUT.

BILL OF MATERIAL
FOR ONE BENT

BAR	NO.	SIZE	TYPE	LENGTH	WEIGHT
B1	4	#10	1	45'-2"	777
B2	4	#10	STR	42'-6"	732
B3	4	#5	STR	42'-6"	177
B4	8	#4	STR	22'-6"	120
B5	11	#4	STR	2'-11"	21
D1	44	#6	STR	1'-6"	99
S1	46	#5	2	8'-1"	388
S2	16	#4	3	7'-7"	81
U1	4	#4	4	5'-10"	16
U2	6	#4	4	5'-0"	20
U3	2	#9	4	10'-1"	69

REINFORCING STEEL (FOR ONE BENT) 2500 LBS

CLASS A CONCRETE BREAKDOWN (FOR ONE BENT)

TOTAL CLASS A CONCRETE 12.9 C.Y.

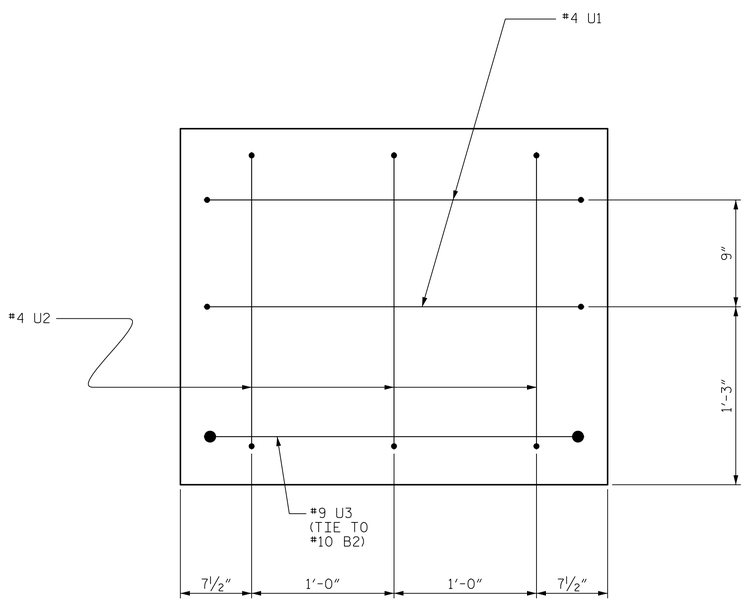

END OF CAP VIEW
(TYPICAL BOTH ENDS)

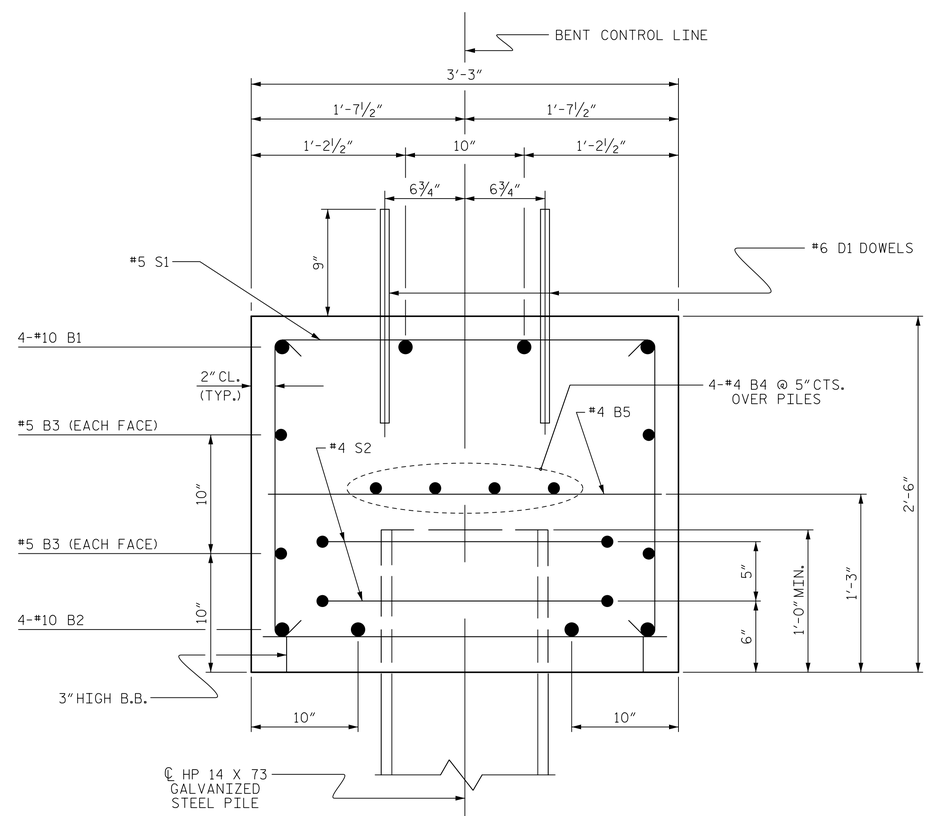

SECTION A-A

NORTH CAROLINA PROFESSIONAL SEAL 051219 ENGINEER SEAN R. SULLIVAN

DocuSigned by: Sean R. Sullivan 4/28/2022

PROJECT NO. B-5996

BRUNSWICK COUNTY

STATION: 18+62.00 -L-

SHEET 3 OF 3

STATE OF NORTH CAROLINA
DEPARTMENT OF TRANSPORTATION
RALEIGH

SUBSTRUCTURE

BENT No. 1
& 2 DETAILS

ASSEMBLED BY : M. WRIGHT DATE : 3/22
CHECKED BY : S. SULLIVAN DATE : 3/22

DRAWN BY : DGE 05/10
CHECKED BY : MKT 05/10
REV. 6/17 MAA/THC

HNTB NORTH CAROLINA, P.C.
NC License No. C-1554
343 E. Six Forks Rd., Suite 200, Raleigh, N.C. 27609

DRAWN BY M. WRIGHT DATE 3/22
CHECKED BY S. SULLIVAN DATE 3/22
DESIGN ENGINEER OF RECORD S. SULLIVAN DATE 3/22

DWG. NO. 17

DOCUMENT NOT CONSIDERED FINAL UNLESS ALL SIGNATURES COMPLETED

REVISIONS						SHEET NO.
NO.	BY	DATE	NO.	BY	DATE	S-17
1			3			TOTAL SHEETS
2			4			19

STD. NO. 14" HP_BT_33_60&120S_<60'

4/28/2022
3:06:44 PM
...\MKT_033_B5996_SWJ_B03_017_090126.dgn

DocuSign Envelope ID: 2F119F11-162E-40A6-8315-83B74791BECE

NOTES :

FOR BERM WIDTH DIMENSIONS, SEE GENERAL DRAWING.

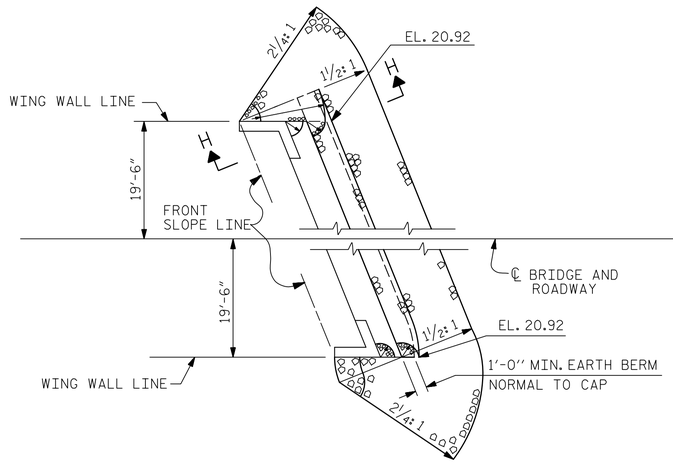

END BENT 1

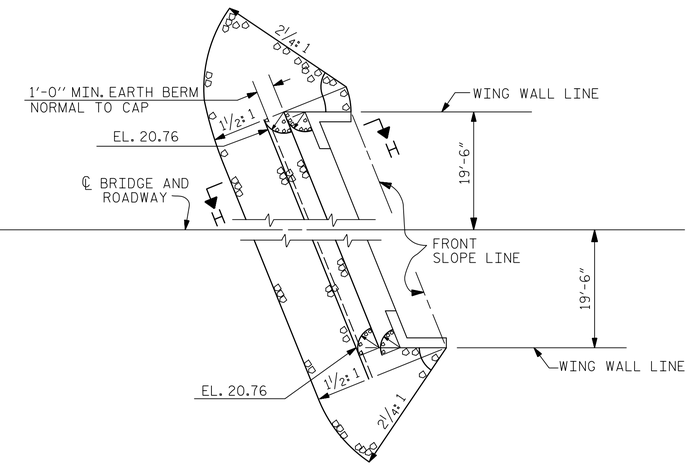

END BENT 2

ESTIMATED QUANTITIES		
BRIDGE @ STA. 18+62.00 -L-	RIP RAP CLASS II (2'-0" THICK)	GEOTEXTILE FOR DRAINAGE
	TONS	SQUARE YARDS
END BENT 1	88	98
END BENT 2	85	94

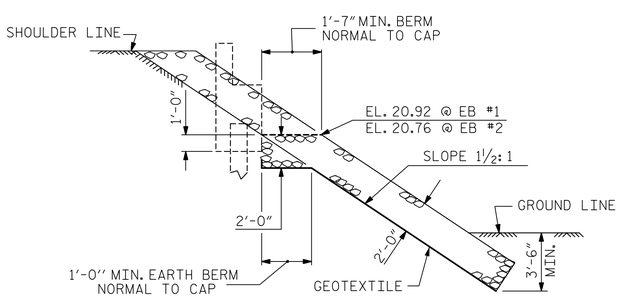

SECTION H-H

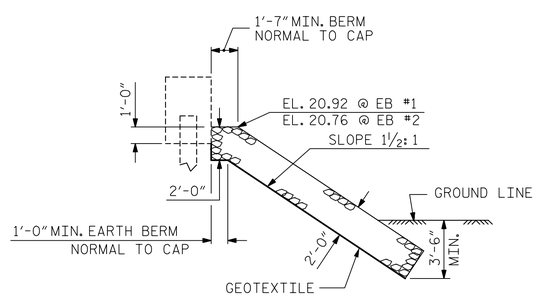

℄ SECTION

BERM RIP RAPPED

PROJECT NO. B-5996

BRUNSWICK COUNTY

STATION: 18+62.00 -L-

SEAL 051219 NORTH CAROLINA PROFESSIONAL ENGINEER SEAN R. SULLIVAN

DocuSigned by: Sean R. Sullivan 4/28/2022

STATE OF NORTH CAROLINA
DEPARTMENT OF TRANSPORTATION
RALEIGH

STANDARD

RIP RAP DETAILS

ASSEMBLED BY : M. WRIGHT DATE : 12/21
CHECKED BY : S. SULLIVAN DATE : 2/22

DRAWN BY : REK 1/84
CHECKED BY : RDU 1/84

REV. 10/1/11 MAA/GM
REV. 12/21/11 MAA/GM
REV. 12/17 MAA/THC

DOCUMENT NOT CONSIDERED FINAL UNLESS ALL SIGNATURES COMPLETED

HNTB NORTH CAROLINA, P.C.
NC License No. C-1554
343 E. Six Forks Rd., Suite 200, Raleigh, N.C. 27609

DRAWN BY M. WRIGHT DATE 12/21
CHECKED BY S. SULLIVAN DATE 3/22
DESIGN ENGINEER OF RECORD S. SULLIVAN DATE 3/22

DWG. NO. 18

REVISIONS						SHEET NO.
NO.	BY	DATE	NO.	BY	DATE	S-18
1			3			TOTAL SHEETS
2			4			19

STD. NO. RR1

4/28/2022 3:06:50 PM
...\401_035_B5996_SMU_RR01_018_090126.dgn

DocuSign Envelope ID: 98375BD5-A613-4207-BA2D-0C714CA010E5

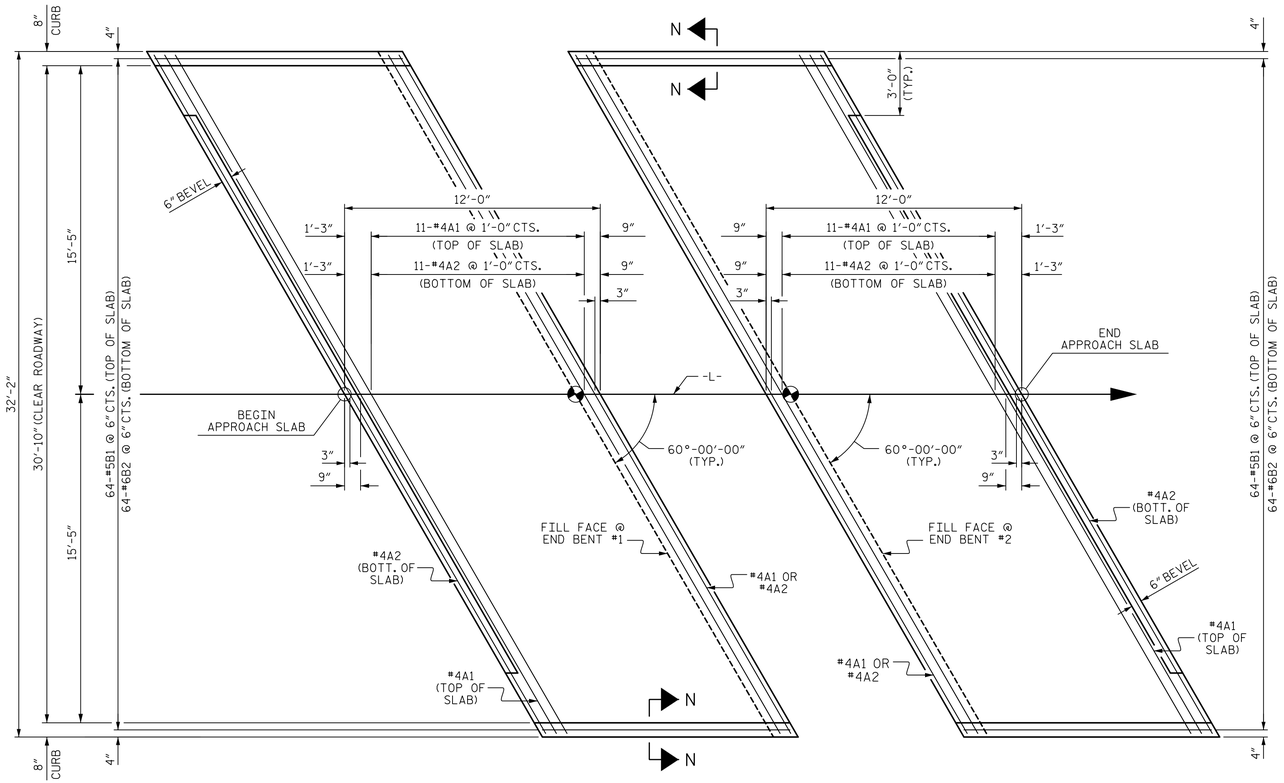

PLAN @ END BENT #1

PLAN @ END BENT #2

DIMENSIONS SHOWN ARE TYPICAL FOR BOTH APPROACH SLABS

NOTES

FOR BRIDGE APPROACH FILL INCLUDING GEOTEXTILE, 4"Ø DRAINAGE PIPE, AND SELECT MATERIAL BACKFILL, SEE ROADWAY PLANS.

GEOTEXTILE SHALL BE TYPE 1 IN ACCORDANCE WITH THE STANDARD SPECIFICATIONS SECTION 1056.

SELECT MATERIAL BACKFILL (CLASS V OR CLASS VI) SHALL BE IN ACCORDANCE WITH STANDARD SPECIFICATIONS SECTION 1016.

SELECT MATERIAL BACKFILL IS TO BE CONTINUOUS ALONG FILL FACE OF BACKWALL FROM OUTSIDE EDGE TO OUTSIDE EDGE OF APPROACH SLAB.

FOR THE 4"Ø DRAINAGE PIPE OUTLET(S), SEE ROADWAY STANDARD DRAWINGS.

AREA BETWEEN THE WINGWALL AND APPROACH SLAB SHALL BE GRADED TO DRAIN THE WATER AWAY FROM THE FILL FACE OF THE BRIDGE AND SHALL BE PAVED. SEE ROADWAY PLANS.

THE CONTRACTOR SHALL ADD A SINGLE LAYER OF TYPE 4 OR TYPE 5 GEOTEXTILE ONE FOOT BELOW THE APPROACH SLAB FOR THE FULL WIDTH OF THE APPROACH FILL. COST OF GEOTEXTILE SHALL BE CONSIDERED INCIDENTAL.

APPROACH SLAB GROOVING IS NOT REQUIRED.

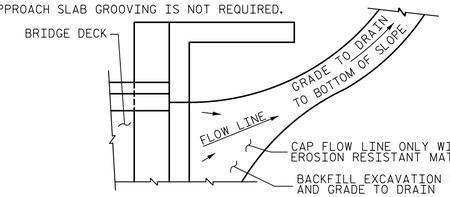

NOTE: IF THE APPROACH SLAB IS NOT CONSTRUCTED IMMEDIATELY AFTER THE BACKFILLING OF THE END BENT EXCAVATION, GRADE TO DRAIN TO THE BOTTOM OF THE SLOPE AND PROVIDE EROSION RESISTANT MATERIAL, SUCH AS FIBERGLASS ROVING OR AS DIRECTED BY THE ENGINEER TO PREVENT SOIL EROSION AND TO PROTECT THE AREA ADJACENT TO THE STRUCTURE. THE CONTRACTOR WILL BE REQUIRED TO REMOVE THESE MATERIALS PRIOR TO CONSTRUCTION OF THE APPROACH SLAB.

BILL OF MATERIAL

APPROACH SLAB AT EB #1

BAR	NO.	SIZE	TYPE	LENGTH	WEIGHT
* A1	13	#4	STR	36'-8"	318
A2	13	#4	STR	36'-8"	318
* B1	64	#5	STR	11'-1"	740
B2	64	#6	STR	11'-7"	1113
REINFORCING STEEL				LBS.	1431
* EPOXY COATED REINFORCING STEEL				LBS.	1058
CLASS AA CONCRETE				C. Y.	18.6

APPROACH SLAB AT EB #2

BAR	NO.	SIZE	TYPE	LENGTH	WEIGHT
* A1	13	#4	STR	36'-8"	318
A2	13	#4	STR	36'-8"	318
* B1	64	#5	STR	11'-1"	740
B2	64	#6	STR	11'-7"	1113
REINFORCING STEEL				LBS.	1431
* EPOXY COATED REINFORCING STEEL				LBS.	1058
CLASS AA CONCRETE				C. Y.	18.6

TEMPORARY DRAINAGE DETAIL

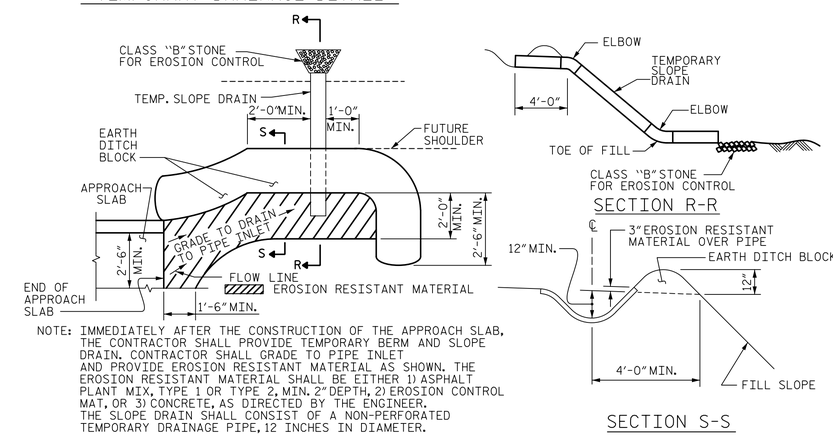

NOTE: IMMEDIATELY AFTER THE CONSTRUCTION OF THE APPROACH SLAB, THE CONTRACTOR SHALL PROVIDE TEMPORARY BERM AND SLOPE DRAIN. CONTRACTOR SHALL GRADE TO PIPE INLET AND PROVIDE EROSION RESISTANT MATERIAL AS SHOWN. THE EROSION RESISTANT MATERIAL SHALL BE EITHER 1) ASPHALT PLANT MIX, TYPE 1 OR TYPE 2, MIN. 2" DEPTH, 2) EROSION CONTROL MAT, OR 3) CONCRETE, AS DIRECTED BY THE ENGINEER. THE SLOPE DRAIN SHALL CONSIST OF A NON-PERFORATED TEMPORARY DRAINAGE PIPE, 12 INCHES IN DIAMETER.

PLAN VIEW

TEMPORARY BERM AND SLOPE DRAIN DETAILS

(TO BE USED WHEN SHOULDER BERM GUTTER IS REQUIRED)

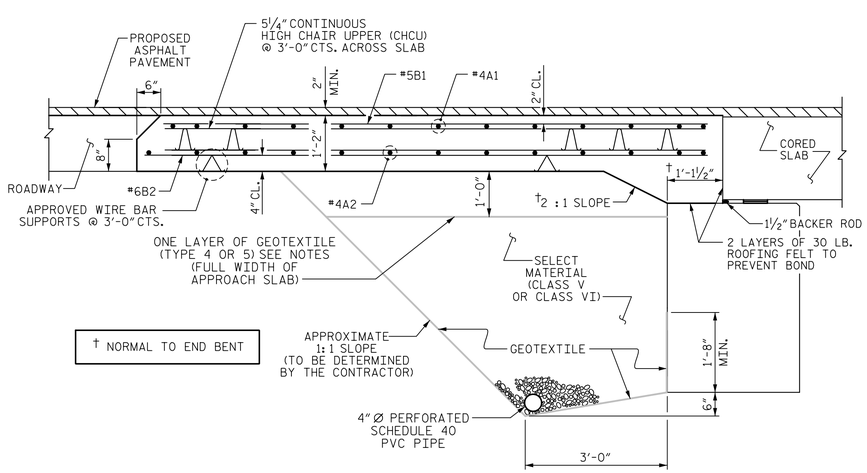

† NORMAL TO END BENT

SECTION THRU SLAB

(TYPE II - MODIFIED APPROACH FILL)

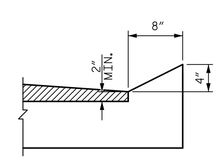

SECTION N-N

CURB DETAILS

SPLICE LENGTHS		
BAR SIZE	EPOXY COATED	UNCOATED
#4	1'-11"	1'-7"
#5	2'-5"	2'-0"
#6	3'-7"	2'-5"

PROJECT NO. B-5996

BRUNSWICK COUNTY

STATION: 18+62.00 -L-

NORTH CAROLINA PROFESSIONAL SEAL 051219 ENGINEER SEAN R. SULLIVAN

DocuSigned by: 5/11/2022

STATE OF NORTH CAROLINA
DEPARTMENT OF TRANSPORTATION
RALEIGH

STANDARD
BRIDGE APPROACH SLAB
FOR PRESTRESSED CONCRETE
CORED SLAB UNIT
(SUB-REGIONAL TIER)
60° SKEW

REVISIONS						SHEET NO.
NO.	BY	DATE	NO.	BY	DATE	S-19
1			3			TOTAL SHEETS
2			4			19

HNTB NORTH CAROLINA, P.C.
NC License No. C-1554
343 E. Six Forks Rd., Suite 200, Raleigh, N.C. 27609

DRAWN BY M. WRIGHT DATE 12/21
CHECKED BY S. SULLIVAN DATE 2/22
DESIGN ENGINEER OF RECORD S. SULLIVAN DATE 3/22

DWG. NO. 19

DOCUMENT NOT CONSIDERED FINAL UNLESS ALL SIGNATURES COMPLETED

ASSEMBLED BY : M. WRIGHT DATE : 12/21
CHECKED BY : S. SULLIVAN DATE : 2/22

DRAWN BY : SHS/MAA 5-09 REV. 12-17 MAA/THC
CHECKED BY : BCH 5-09 REV. 08-19 BNB/THC

5/11/2022 4:49:11 PM
...\407_DOT_B5996_SMU_AS01_019_090126.dgn

STD. NO. BAS_33_60S

DocuSign Envelope ID: 2F119F11-162E-40A6-8315-83B74791BECE

STANDARD NOTES

DESIGN DATA:

SPECIFICATIONS	A.A.S.H.T.O. (CURRENT)
LIVE LOAD	SEE PLANS
IMPACT ALLOWANCE	SEE A.A.S.H.T.O.
STRESS IN EXTREME FIBER OF STRUCTURAL STEEL - AASHTO M270 GRADE 36	20,000 LBS. PER SQ. IN.
- AASHTO M270 GRADE 50W	27,000 LBS. PER SQ. IN.
- AASHTO M270 GRADE 50	27,000 LBS. PER SQ. IN.
REINFORCING STEEL IN TENSION - GRADE 60	24,000 LBS. PER SQ. IN.
CONCRETE IN COMPRESSION	1,200 LBS. PER SQ. IN.
CONCRETE IN SHEAR	SEE A.A.S.H.T.O.
STRUCTURAL TIMBER - TREATED OR UNTREATED EXTREME FIBER STRESS	1,800 LBS. PER SQ. IN.
COMPRESSION PERPENDICULAR TO GRAIN OF TIMBER	375 LBS. PER SQ. IN.
EQUIVALENT FLUID PRESSURE OF EARTH	30 LBS. PER CU. FT. (MINIMUM)

MATERIAL AND WORKMANSHIP:

EXCEPT AS MAY OTHERWISE BE SPECIFIED ON PLANS OR IN THE SPECIAL PROVISIONS, ALL MATERIAL AND WORKMANSHIP SHALL BE IN ACCORDANCE WITH THE 2018 "STANDARD SPECIFICATIONS FOR ROADS AND STRUCTURES" OF THE N. C. DEPARTMENT OF TRANSPORTATION.

STEEL SHEET PILING FOR PERMANENT OR TEMPORARY APPLICATIONS SHALL BE HOT ROLLED.

CONCRETE:

UNLESS OTHERWISE REQUIRED ON PLANS, CLASS A CONCRETE SHALL BE USED FOR ALL PORTIONS OF ALL STRUCTURES WITH THE EXCEPTION THAT: CLASS AA CONCRETE SHALL BE USED IN BRIDGE SUPERSTRUCTURES, ABUTMENT BACKWALLS, AND APPROACH SLABS; AND CLASS B CONCRETE SHALL BE USED FOR SLOPE PROTECTION AND RIP RAP.

CONCRETE CHAMFERS:

UNLESS OTHERWISE NOTED ON THE PLANS, ALL EXPOSED CORNERS ON STRUCTURES SHALL BE CHAMFERED ¾" WITH THE FOLLOWING EXCEPTIONS: TOP CORNERS OF CURBS MAY BE ROUNDED TO 1½" RADIUS WHICH IS BUILT INTO CURB FORMS; CORNERS OF TRANSVERSE FLOOR EXPANSION JOINTS SHALL BE ROUNDED WITH A ¼" FINISHING TOOL UNLESS OTHERWISE REQUIRED ON PLANS; AND CORNERS OF EXPANSION JOINTS IN THE ROADWAY FACES AND TOPS OF CURBS AND SIDEWALKS SHALL BE ROUNDED TO A ¼" RADIUS WITH A FINISHING STONE OR TOOL UNLESS OTHERWISE REQUIRED ON PLANS.

DOWELS:

DOWELS WHEN INDICATED ON PLANS AS FOR CULVERT EXTENSIONS, SHALL BE EMBEDDED AT LEAST 12" INTO THE OLD CONCRETE AND GROUTED INTO PLACE WITH 1:2 CEMENT MORTAR.

ALLOWANCE FOR DEAD LOAD DEFLECTION, SETTLEMENT, ETC. IN CASTING SUPERSTRUCTURES:

BRIDGES SHALL BE BUILT ON THE GRADE OR VERTICAL CURVE SHOWN ON PLANS. SLABS, CURBS AND PARAPETS SHALL CONFORM TO THE GRADE OR CURVE.

ALL DIMENSIONS WHICH ARE GIVEN IN SECTION AND ARE AFFECTED BY DEAD LOAD DEFLECTIONS ARE DIMENSIONS AT CENTER LINE OF BEARING UNLESS OTHERWISE NOTED ON PLANS. IN SETTING FORMS FOR STEEL BEAM BRIDGES AND PRESTRESSED CONCRETE GIRDER BRIDGES, ADJUSTMENTS SHALL BE MADE DUE TO THE DEAD LOAD DEFLECTIONS FOR THE ELEVATIONS SHOWN. WHERE BLOCKS ARE SHOWN OVER BEAMS FOR BUILDING UP TO THE SLAB, THE VERTICAL DIMENSIONS OF THE BLOCKS SHALL BE ADJUSTED BETWEEN BEARINGS TO COMPENSATE FOR DEAD LOAD DEFLECTIONS, VERTICAL CURVE ORDINATE, AND ACTUAL BEAM CAMBER. WHERE BOTTOM OF SLAB IS IN LINE WITH BOTTOM OF TOP FLANGES, DEPTH OF SLAB BETWEEN BEARINGS SHALL BE ADJUSTED TO COMPENSATE FOR DEAD LOAD DEFLECTION, VERTICAL CURVE ORDINATE, AND ACTUAL BEAM CAMBER.

IN SETTING FALSEWORK AND FORMS FOR REINFORCED CONCRETE SPANS, AN ALLOWANCE SHALL BE MADE FOR DEAD LOAD DEFLECTIONS, SETTLEMENT OF FALSEWORK, AND PERMANENT CAMBER WHICH SHALL BE PROVIDED FOR IN ADDITION TO THE ELEVATIONS SHOWN. AFTER REMOVAL OF THE FALSEWORK, THE FINISHED STRUCTURES SHALL CONFORM TO THE PROFILE AND ELEVATIONS SHOWN ON THE PLANS AND CONSTRUCTION ELEVATIONS FURNISHED BY THE ENGINEER.

DETAILED DRAWINGS FOR FALSEWORK OR FORMS FOR BRIDGE SUPERSTRUCTURE AND ANY STRUCTURE OR PARTS OF A STRUCTURE AS NOTED ON THE PLANS SHALL BE SUBMITTED TO THE ENGINEER FOR APPROVAL BEFORE CONSTRUCTION OF THE FALSEWORK OR FORMS IS STARTED.

REINFORCING STEEL:

ALL REINFORCING STEEL SHALL BE DEFORMED. DIMENSIONS RELATIVE TO PLACEMENT OF REINFORCING ARE TO CENTERS OF BARS UNLESS OTHERWISE INDICATED IN THE PLANS. DIMENSIONS ON BAR DETAILS ARE TO CENTERS OF BARS OR ARE OUT TO OUT AS INDICATED ON PLANS.

WIRE BAR SUPPORTS SHALL BE PROVIDED FOR REINFORCING STEEL WHERE INDICATED ON THE PLANS. WHEN BAR SUPPORT PIECES ARE PLACED IN CONTINUOUS LINES, THEY SHALL BE SO PLACED THAT THE ENDS OF THE SUPPORTING WIRES SHALL BE LAPPED TO LOCK LEGS ON ADJOINING PIECES.

STRUCTURAL STEEL:

AT THE CONTRACTOR'S OPTION, HE MAY SUBSTITUTE ⅞" Ø SHEAR STUDS FOR THE ¾" Ø STUDS SPECIFIED ON THE PLANS. THIS SUBSTITUTION SHALL BE MADE AT THE RATE OF 3 - ⅞" Ø STUDS FOR 4 - ¾" Ø STUDS, AND STUD SPACING CHANGES SHALL BE MADE AS NECESSARY TO PROVIDE THE SAME EQUIVALENT NUMBER OF ⅞" Ø STUDS ALONG THE BEAM AS SHOWN FOR ¾" Ø STUDS BASED ON THE RATIO OF 3 - ⅞" Ø STUDS FOR 4 - ¾" Ø STUDS. STUDS OF THE LENGTH SPECIFIED ON THE PLANS MUST BE PROVIDED. THE MAXIMUM SPACING SHALL BE 2'-0".

EXCEPT AT THE INTERIOR SUPPORTS OF CONTINUOUS BEAMS WHERE THE COVER PLATE IS IN CONTACT WITH BEARING PLATE, THE CONTRACTOR MAY, AT HIS OPTION, SUBSTITUTE FOR THE COVER PLATES DESIGNATED ON THE PLANS COVER PLATES OF THE EQUIVALENT AREA PROVIDED THESE PLATES ARE AT LEAST 5/16" IN THICKNESS AND DO NOT EXCEED A WIDTH EQUAL TO THE FLANGE WIDTH LESS 2" OR A THICKNESS EQUAL TO 2 TIMES THE FLANGE THICKNESS. THE SIZE OF FILLET WELDS SHALL CONFORM TO THE REQUIREMENTS OF THE CURRENT ANSI/AASHTO/AWS "BRIDGE WELDING CODE". ELECTROSLAG WELDING WILL NOT BE PERMITTED.

WITH THE SOLE EXCEPTION OF EDGES AT SURFACES WHICH BEAR ON OTHER SURFACES, ALL SHARP EDGES AND ENDS OF SHAPES AND PLATES SHALL BE SLIGHTLY ROUNDED BY SUITABLE MEANS TO A RADIUS OF APPROXIMATELY 1/16 INCH OR EQUIVALENT FLAT SURFACE AT A SUITABLE ANGLE PRIOR TO PAINTING, GALVANIZING, OR METALLIZING.

HANDRAILS AND POSTS:

METAL STANDARDS AND FACES OF THE CONCRETE END POSTS FOR THE METAL RAIL SHALL BE SET NORMAL TO THE GRADE OF THE CURB, UNLESS OTHERWISE SHOWN ON PLANS. THE METAL RAIL AND TOPS OF CONCRETE POSTS USED WITH THE ALUMINUM RAIL SHALL BE BUILT PARALLEL TO THE GRADE OF THE CURB.

METAL HANDRAILS SHALL BE IN ACCORDANCE WITH THE PLANS. RAILS SHALL BE AS MANUFACTURED FOR BRIDGE RAILING. CASTINGS SHALL BE OF A UNIFORM APPEARANCE. FINS AND OTHER DEFORMATIONS RESULTING FROM CASTING OR OTHERWISE SHALL BE REMOVED IN A MANNER SO THAT A UNIFORM COLORING OF THE COMPLETED CASTING SHALL BE OBTAINED. CASTINGS WITH DISCOLORATIONS OR OF NON-UNIFORM COLORING WILL NOT BE ACCEPTED. CERTIFIED MILL REPORTS ARE REQUIRED FOR METAL RAILS AND POSTS.

SPECIAL NOTES:

GENERALLY, IN CASE OF DISCREPANCY, THIS STANDARD SHEET OF NOTES SHALL GOVERN OVER THE SPECIFICATIONS, BUT THE REMAINDER OF THE PLANS SHALL GOVERN OVER NOTES HEREON, AND SPECIAL PROVISIONS SHALL GOVERN OVER ALL. SEE SPECIFICATIONS ARTICLE 105-4.

ENGLISH

JANUARY, 1990