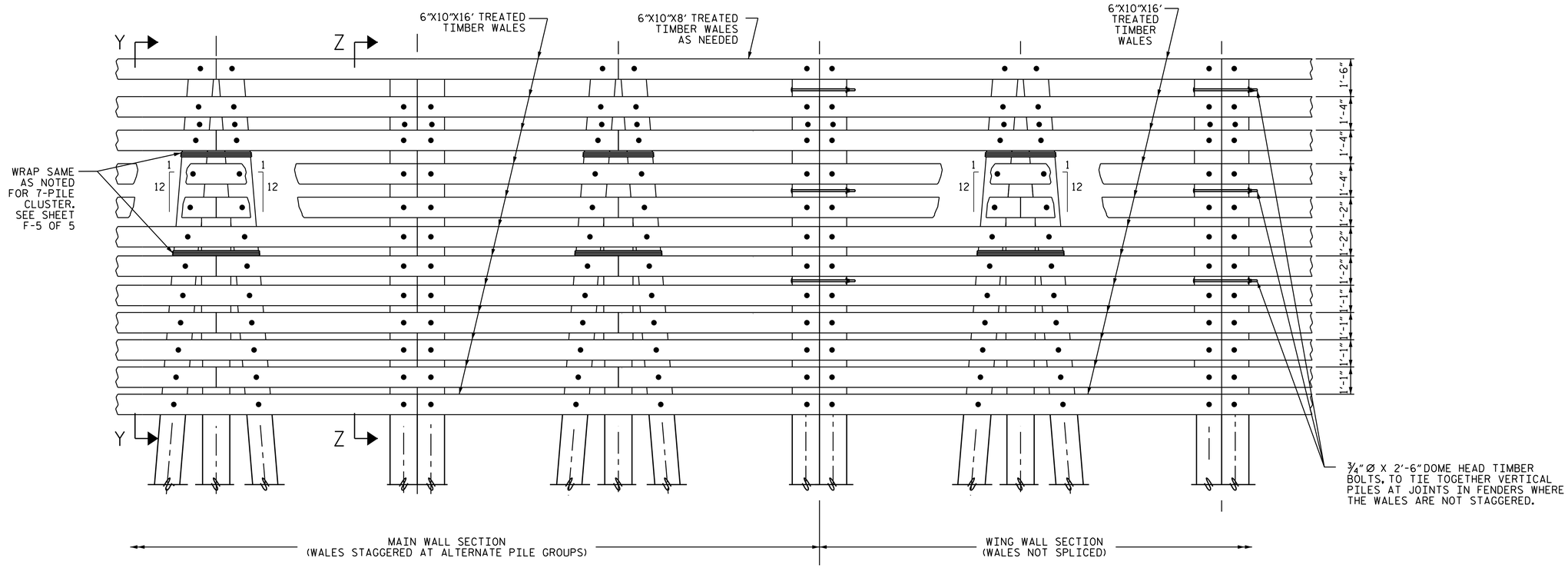

ELEVATION VIEW

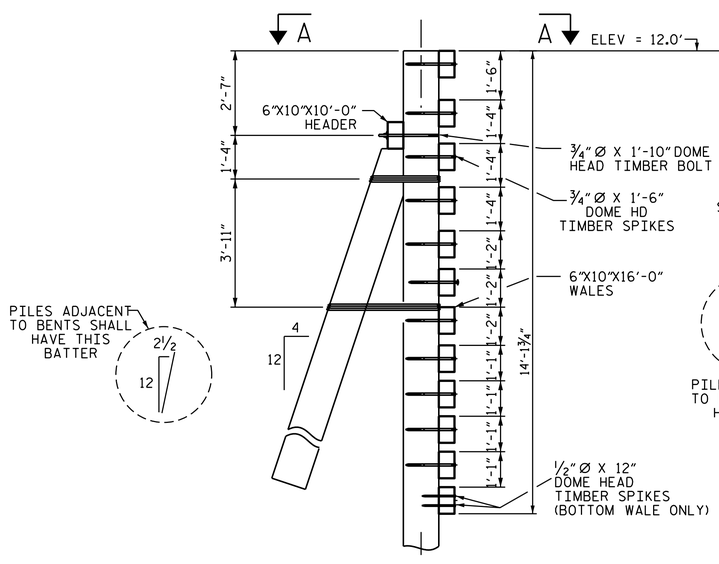

SECTION Y-Y

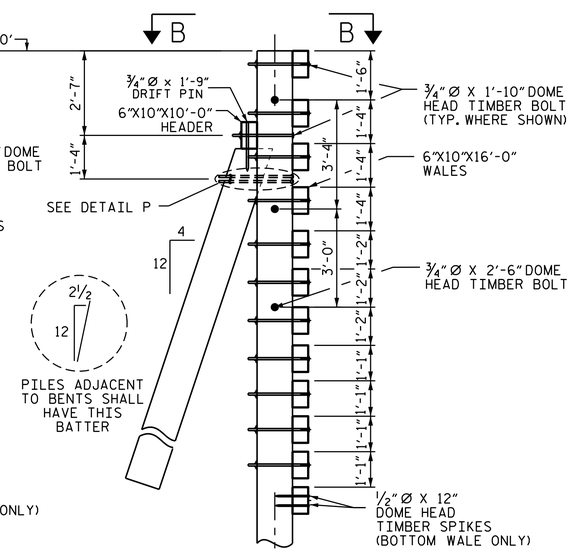

SECTION Z-Z

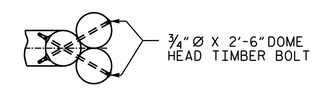

DETAIL P

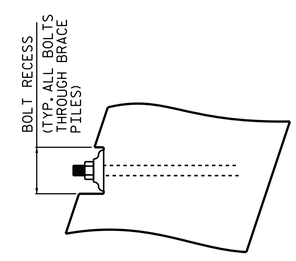

DETAIL "A"

AVERAGE PILE DIA IS ASSUMED TO BE 13"

NOTES:

ALL DOME HEAD BOLTS THAT RUN THRU THE WALES SHALL HAVE THEIR HEADS LOCATED AT THE FRONT FACE OF THE FENDER SYSTEM.

ON THE BACK SIDE OF FENDER SYSTEM THE BOLTS GOING THROUGH VERTICAL AND BATTERED PILES SHALL BE RECESSED TO ALLOW THE WASHER/NUT TO LIE FLUSH AGAINST THE PILE.

PROJECT NO. 41732.11
NEW HANOVER COUNTY
BRIDGE NO. 30
SHEET 4 OF 5

STATE OF NORTH CAROLINA
DEPARTMENT OF TRANSPORTATION
RALEIGH

FENDER SYSTEM DETAILS

NORTH CAROLINA PROFESSIONAL SEAL 21271 ENGINEER GREGORY W. DICKEY

DocuSigned by: Greg Dickey
B4E6468BCE5B4BB...
12/18/2017

DOCUMENT NOT CONSIDERED FINAL UNLESS ALL SIGNATURES COMPLETED

REVISIONS						SHEET NO.
NO.	BY:	DATE:	NO.	BY:	DATE:	F-4
1			3			TOTAL SHEETS
2			4			5

DRAWN BY : P.D. BRYANT DATE : 11/2017
CHECKED BY : G.W. DICKEY DATE : 12/2017

18-DEC-2017 15:21
S:\DPG1\Division3\New Hanover *30 Fender (2017)\xxxx_SMU_ DE_640030.dgn
gdickey