DocuSign Envelope ID: F3F25A36-7017-43B6-9D93-52DF58FE085E

09/08/99

See Sheet 1-A For Index of Sheets

STATE OF NORTH CAROLINA
DIVISION OF HIGHWAYS

ONSLOW COUNTY

STATE	STATE PROJECT REFERENCE NO.	SHEET NO.	TOTAL SHEETS
N.C.	U–5319	1	

STATE PROJ. NO.	F. A. PROJ. NO.	DESCRIPTION
45433.1.1	HPPSTP–1308(013)	PE
45433.2.1	HPPSTP–1308(013)	ROW
45433.3.1	HPPSTP–1308(013)	CONSTR

TIP PROJECT: U–5319

CONTRACT: DC00184

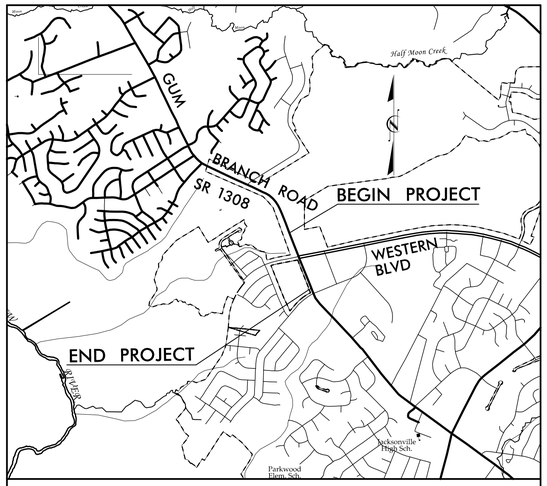

VICINITY MAP

100% PLAN SUBMITTAL

LOCATION: INTERSECTION OF SR 1308 (GUM BRANCH ROAD) AND NC 53 (WESTERN BOULEVARD)

TYPE OF WORK: GRADING, DRAINAGE, PAVING AND SIGNALS

EXISTING TRAFFIC SIGNAL

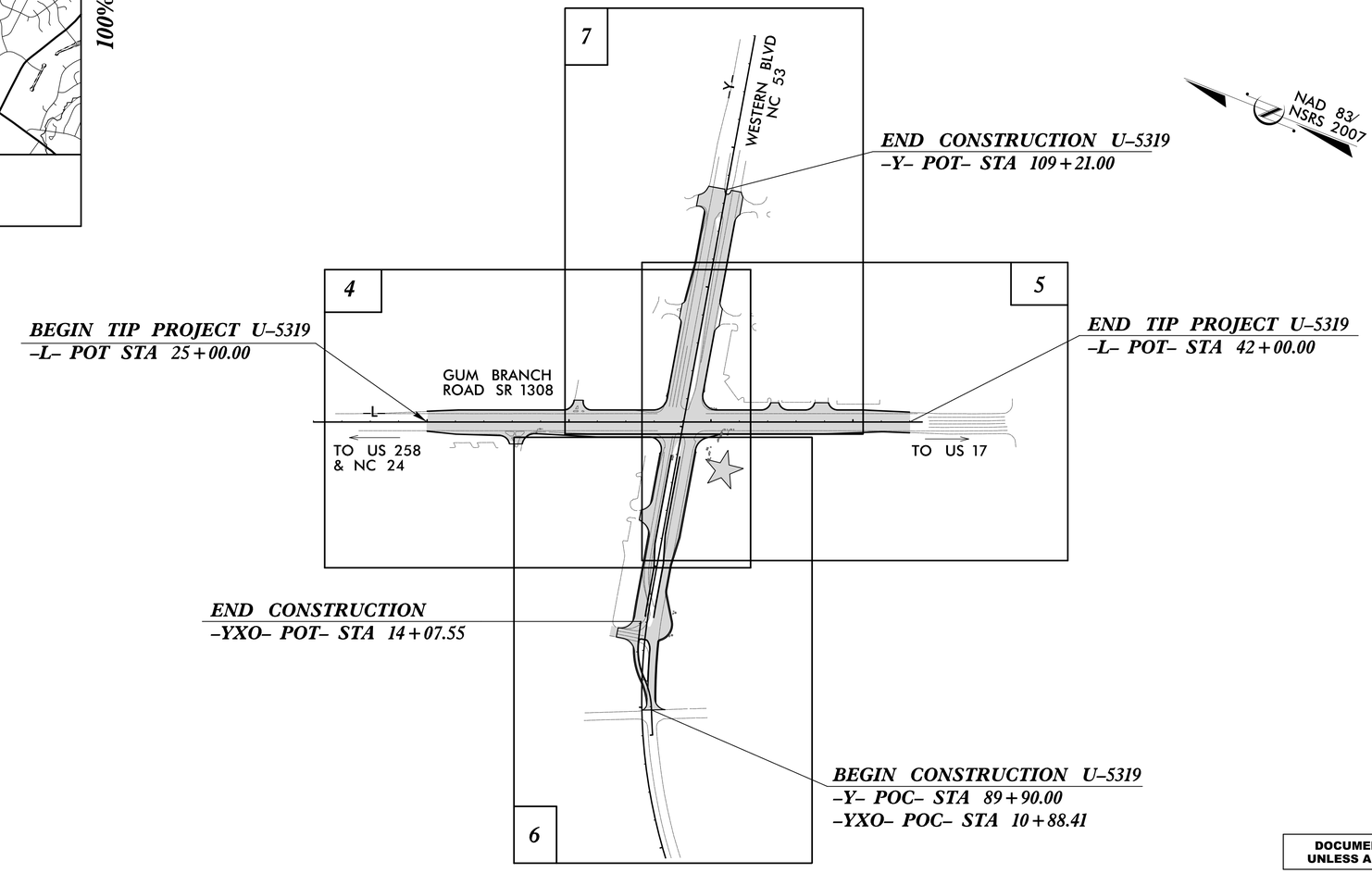

DOCUMENT NOT CONSIDERED FINAL UNLESS ALL SIGNATURES COMPLETED

GRAPHIC SCALES

50 25 0 50 100
PLANS

50 25 0 50 100
PROFILE (HORIZONTAL)

10 5 0 10 20
PROFILE (VERTICAL)

DESIGN DATA

ADT 2015 = 28,300
ADT 2040 = 52,600
K = 8%
D = 60%
T = 4% *
V = 50 MPH
* TTST=1% DUAL=3%
FUNC CLASS =
MINOR ARTERIAL
REGIONAL TIER

PROJECT LENGTH

LENGTH OF ROADWAY TIP PROJECT U–5319 = 0.322 MILES

TOTAL LENGTH OF TIP PROJECT U–5319 = 0.322 MILES

Prepared In the Office of:

HNTB NORTH CAROLINA, P.C.
343 E. Six Forks Road, Suite 200
Raleigh, North Carolina 27609
NC License No: C-1554

2018 STANDARD SPECIFICATIONS

RIGHT OF WAY DATE:
JUNE 28, 2017

LETTING DATE:
JUNE 28, 2018

DOUG M. WHEATLEY, PE
PROJECT ENGINEER

CORY GRELL, PE
PROJECT ROADWAY DESIGNER

MICHAEL BASS
NCDOT CONTACT

HYDRAULICS ENGINEER

DocuSigned by: James A. Byrd 4/23/2018
SIGNATURE:

NORTH CAROLINA PROFESSIONAL SEAL 15764 ENGINEER JAMES A BYRD P.E.

ROADWAY DESIGN ENGINEER

DocuSigned by: Douglas M. Wheatley 4/24/2018
SIGNATURE:

NORTH CAROLINA PROFESSIONAL SEAL 36786 ENGINEER DOUGLAS M. WHEATLEY P.E.

STATE OF NORTH CAROLINA · DEPARTMENT OF TRANSPORTATION ·

23-APR-2018 14:38
\Roadway\Proj\sr1308_rdy_tsh.dgn
HNTB

DocuSign Envelope ID: F3F25A36-7017-43B6-9D93-52DF58FE085E

8/17/99

PROJECT REFERENCE NO.	SHEET NO.
U-5319	1A

ROADWAY DESIGN ENGINEER

NORTH CAROLINA PROFESSIONAL SEAL 36786 ENGINEER TIMOTHY M. FINLEY

4/24/2018

DOCUMENT NOT CONSIDERED FINAL UNLESS ALL SIGNATURES COMPLETED

INDEX OF SHEETS

SHEET NUMBER	SHEET
1	TITLE SHEET
1A	INDEX OF SHEETS, GENERAL NOTES, AND STANDARD DRAWINGS
1B	CONVENTIONAL SYMBOLS
2A-1 THRU 2A-4	PAVEMENT SCHEDULE AND TYPICAL SECTIONS
2B-1	INTERSECTION AND DIMENSION DETAIL
3B-1	SUMMARIES OF GUARDRAIL, SHOULDER BERM GUTTER, EXPRESSWAY GUTTER, AND PAVEMENT REMOVAL
3B-2	SUMMARY OF EARTHWORK
3D-1 THRU 3D-2	DRAINAGE SUMMARIES
3G-1	GEOTECHNICAL SUMMARIES
3P-1	PARCEL INDEX SHEET
4 THRU 7	PLAN SHEETS
8 THRU 10	PROFILE SHEETS
TMP-1 THRU TMP-5	TRANSPORTATION MANAGEMENT PLANS
PMP-1 THRU PMP-5A	PAVEMENT MARKING PLANS
EC-1 THRU EC-7	EROSION CONTROL PLANS
SIGN-1 THRU SIGN-6	SIGNING PLANS
SIG-1 THRU SCP-4	SIGNAL PLANS
UC-1 THRU UC-5	UTILITIES CONSTRUCTION PLANS
UO-1 THRU UO-5	UTILITIES BY OTHERS PLANS
X-0	CROSS SECTION INDEX SHEET
X-1A	EARTHWORK VOLUME SUMMARY
X-1 THRU X-15	CROSS SECTIONS

EFF. 01-16-2018
REV.

2018 ROADWAY ENGLISH STANDARD DRAWINGS

The following Roadway Standards as appear in "Roadway Standard Drawings" Highway Design Branch - N. C. Department of Transportation - Raleigh, N. C., Dated January, 2018 are applicable to this project and by reference hereby are considered a part of these plans:

STD.NO.	TITLE
DIVISION 2 - EARTHWORK	
200.03	Method of Clearing - Method III
225.01	Guide for Grading Subgrade - Interstate and Freeway
225.02	Guide for Grading Subgrade - Secondary and Local
225.04	Method of Obtaining Superelevation - Two Lane Pavement
225.05	Method of Obtaining Superelevation - Divided Highways
240.01	Guide for Berm Ditch Construction
DIVISION 3 - PIPE CULVERTS	
300.01	Method of Pipe Installation
310.10	Driveway Pipe Construction
DIVISION 5 - SUBGRADE, BASES AND SHOULDERS	
560.01	Method of Shoulder Construction - High Side of Superelevated Curve - Method I
DIVISION 6 - ASPHALT BASES AND PAVEMENTS	
654.01	Pavement Repairs
DIVISION 8 - INCIDENTALS	
806.01	Concrete Right-of-Way Marker
806.02	Granite Right-of-Way Marker
806.03	Concrete Contol of Access Marker
815.02	Subsurface Drain
840.00	Concrete Base Pad for Drainage Structures
840.01	Brick Catch Basin - 12" thru 54" Pipe
840.02	Concrete Catch Basin - 12" thru 54" Pipe
840.03	Frame, Grates and Hood - for Use on Standard Catch Basin
840.14	Concrete Drop Inlet - 12" thru 30" Pipe
840.15	Brick Drop Inlet - 12" thru 30" Pipe
840.16	Drop Inlet Frame and Grates - for use with Std. Dwg 840.14 and 840.15
840.18	Concrete Grated Drop Inlet Type 'B' - 12" thru 36" Pipe
840.25	Anchorage for Frames - Brick or Concrete or Precast
840.27	Brick Grated Drop Inlet Type 'B' - 12" thru 36" Pipe
840.29	Frames and Narrow Slot Flat Grates
840.45	Precast Drainage Structure
840.66	Drainage Structure Steps
840.72	Pipe Collar
846.01	Concrete Curb, Gutter and Curb & Gutter
846.02	Drop Inlet Installation in Expressway Gutter
846.04	Drop Inlet Installation in Shoulder Berm Gutter
848.03	Driveway Turnout - Drop Curb Type
848.04	Street Turnout
850.11	Guide for Berm Drainage Outlet - 24" and 30" Pipe
852.01	Concrete Islands
852.06	Method for Placement of Drop Inlets in Concrete Islands
862.01	Guardrail Placement
862.02	Guardrail Installation
866.02	Woven Wire Fence - with Wood Post
876.02	Guide for Rip Rap at Pipe Outlets
876.04	Drainage Ditches with Class 'B' Rip Rap

GENERAL NOTES:

2018 SPECIFICATIONS
EFFECTIVE: 01-16-2018
REVISED:

GRADE LINE:
GRADING AND SURFACING:

THE GRADE LINES SHOWN DENOTE THE FINISHED ELEVATION OF THE PROPOSED SURFACING AT GRADE POINTS SHOWN ON THE TYPICAL SECTIONS. GRADE LINES MAY BE ADJUSTED AT THEIR BEGINNING AND ENDING AND AT STRUCTURES AS DIRECTED BY THE ENGINEER IN ORDER TO SECURE A PROPER TIE-IN.

CLEARING:

CLEARING ON THIS PROJECT SHALL BE PERFORMED TO THE LIMITS ESTABLISHED BY METHOD III.

SUPERELEVATION:

ALL CURVES ON THIS PROJECT SHALL BE SUPERELEVATED IN ACCORDANCE WITH STD. NO. 225.04 OR 225.05 USING THE RATE OF SUPERELEVATION AND RUNOFF SHOWN ON THE PLANS. SUPERELEVATION IS TO BE REVOLVED ABOUT THE GRADE POINTS SHOWN ON THE TYPICAL SECTIONS.

SHOULDER CONSTRUCTION:

ASPHALT, EARTH, AND CONCRETE SHOULDER CONSTRUCTION ON THE HIGH SIDE OF SUPERELEVATED CURVES SHALL BE IN ACCORDANCE WITH STD. NO. 560.01

SIDE ROADS:

THE CONTRACTOR WILL BE REQUIRED TO DO ALL NECESSARY WORK TO PROVIDE SUITABLE CONNECTIONS WITH ALL ROADS, STREETS, AND DRIVES ENTERING THIS PROJECT. THIS WORK WILL BE PAID FOR AT THE CONTRACT UNIT PRICE FOR THE PARTICULAR ITEMS INVOLVED.

BERM DITCHES:

BERM DITCHES SHALL BE CONSTRUCTED IN ACCORDANCE WITH STD. NO. 240.01 AT LOCATIONS SHOWN ON THE PLANS OR AS DIRECTED BY THE ENGINEER.

SUBSURFACE DRAINS:

SUBSURFACE DRAINS SHALL BE CONSTRUCTED IN ACCORDANCE WITH STD. NO. 815.02 AT LOCATIONS DIRECTED BY THE ENGINEER.

DRIVEWAYS:

DRIVEWAYS SHALL BE CONSTRUCTED IN ACCORDANCE WITH STD. 848.03 AT LOCATIONS SHOWN ON PLANS OR AS DIRECTED BY THE ENGINEER.

STREET TURNOUT:

STREET RETURNS SHALL BE CONSTRUCTED IN ACCORDANCE WITH STD. NO. 848.04 USING THE RADII NOTED ON PLANS.

GUARDRAIL:

THE GUARDRAIL LOCATIONS SHOWN ON THE PLANS MAY BE ADJUSTED DURING CONSTRUCTION AS DIRECTED BY THE ENGINEER. THE CONTRACTOR SHOULD CONSULT WITH THE ENGINEER PRIOR TO ORDERING GUARDRAIL MATERIAL.

TEMPORARY SHORING:

SHORING REQUIRED FOR THE MAINTENANCE OF TRAFFIC WILL BE PAID FOR AS "EXTRA WORK" IN ACCORDANCE WITH SECTION 104-7.

SUBSURFACE PLANS:

NO SUBSURFACE PLANS ARE AVAILABLE ON THIS PROJECT. THE CONTRACTOR SHOULD MAKE HIS OWN INVESTIGATION AS TO THE SUBSURFACE CONDITIONS.

UTILITIES:

UTILITY OWNERS ON THIS PROJECT ARE DUKE ENERGY, PEE DEE

ELECTRIC, MCI, AT&T, MCNC, SPECTRUM, DIXIE PIPELINE, RICHMOND COUNTY

ANY RELOCATION OF EXISTING UTILITIES WILL BE ACCOMPLISHED BY OTHERS.

RIGHT-OF-WAY MARKERS:

ALL RIGHT-OF-WAY MARKERS ON THIS PROJECT SHALL BE PLACED BY CONTRACT.

23-APR-2018 14:33
N:\Roadway\P-o_\SR1308_RDY_GEN.dgn
tmfinley

DocuSign Envelope ID: F7730022-487C-46E5-BD05-1BFFC512166D

12/2/2016

PROJECT REFERENCE NO.	SHEET NO.
U-5319	1B

STATE OF NORTH CAROLINA, DIVISION OF HIGHWAYS

CONVENTIONAL PLAN SHEET SYMBOLS

Note: Not to Scale **S.U.E. = Subsurface Utility Engineering*

BOUNDARIES AND PROPERTY:

- State Line
- County Line
- Township Line
- City Line
- Reservation Line
- Property Line
- Existing Iron Pin — EIP
- Computed Property Corner
- Property Monument — ECM
- Parcel/Sequence Number — 123
- Existing Fence Line
- Proposed Woven Wire Fence
- Proposed Chain Link Fence
- Proposed Barbed Wire Fence
- Existing Wetland Boundary — WLB
- Proposed Wetland Boundary — WLB
- Existing Endangered Animal Boundary — EAB
- Existing Endangered Plant Boundary — EPB
- Existing Historic Property Boundary — HPB
- Known Contamination Area: Soil — S
- Potential Contamination Area: Soil — S
- Known Contamination Area: Water — W
- Potential Contamination Area: Water — W
- Contaminated Site: Known or Potential

BUILDINGS AND OTHER CULTURE:

- Gas Pump Vent or U/G Tank Cap
- Sign — S
- Well — W
- Small Mine
- Foundation
- Area Outline
- Cemetery
- Building
- School
- Church
- Dam

HYDROLOGY:

- Stream or Body of Water
- Hydro, Pool or Reservoir
- Jurisdictional Stream — JS
- Buffer Zone 1 — BZ 1
- Buffer Zone 2 — BZ 2
- Flow Arrow
- Disappearing Stream
- Spring
- Wetland
- Proposed Lateral, Tail, Head Ditch — FLOW
- False Sump

RAILROADS:

- Standard Gauge — CSX TRANSPORTATION
- RR Signal Milepost — MILEPOST 35
- Switch — SWITCH
- RR Abandoned
- RR Dismantled

RIGHT OF WAY & PROJECT CONTROL:

- Secondary Horiz and Vert Control Point
- Primary Horiz Control Point
- Primary Horiz and Vert Control Point
- Exist Permanent Easment Pin and Cap
- New Permanent Easement Pin and Cap
- Vertical Benchmark
- Existing Right of Way Marker
- Existing Right of Way Line
- New Right of Way Line — RW
- New Right of Way Line with Pin and Cap — RW
- New Right of Way Line with Concrete or Granite R/W Marker — RW
- New Control of Access Line with Concrete C/A Marker — CA
- Existing Control of Access — CA
- New Control of Access — CA
- Existing Easement Line — E
- New Temporary Construction Easement — E
- New Temporary Drainage Easement — TDE
- New Permanent Drainage Easement — PDE
- New Permanent Drainage / Utility Easement — DUE
- New Permanent Utility Easement — PUE
- New Temporary Utility Easement — TUE
- New Aerial Utility Easement — AUE

ROADS AND RELATED FEATURES:

- Existing Edge of Pavement
- Existing Curb
- Proposed Slope Stakes Cut — C
- Proposed Slope Stakes Fill — F
- Proposed Curb Ramp — CR
- Existing Metal Guardrail
- Proposed Guardrail
- Existing Cable Guiderail
- Proposed Cable Guiderail
- Equality Symbol
- Pavement Removal

VEGETATION:

- Single Tree
- Single Shrub
- Hedge
- Woods Line
- Orchard
- Vineyard — Vineyard

EXISTING STRUCTURES:

MAJOR:

- Bridge, Tunnel or Box Culvert — CONC
- Bridge Wing Wall, Head Wall and End Wall — CONC WW

MINOR:

- Head and End Wall — CONC HW
- Pipe Culvert
- Footbridge
- Drainage Box: Catch Basin, DI or JB — CB
- Paved Ditch Gutter
- Storm Sewer Manhole — S
- Storm Sewer — S

UTILITIES:

POWER:

- Existing Power Pole
- Proposed Power Pole
- Existing Joint Use Pole
- Proposed Joint Use Pole
- Power Manhole — P
- Power Line Tower
- Power Transformer
- U/G Power Cable Hand Hole
- H-Frame Pole
- U/G Power Line LOS B (S.U.E.*) — P
- U/G Power Line LOS C (S.U.E.*) — P
- U/G Power Line LOS D (S.U.E.*) — P

TELEPHONE:

- Existing Telephone Pole
- Proposed Telephone Pole
- Telephone Manhole — T
- Telephone Pedestal — T
- Telephone Cell Tower
- U/G Telephone Cable Hand Hole — HH
- U/G Telephone Cable LOS B (S.U.E.*) — T
- U/G Telephone Cable LOS C (S.U.E.*) — T
- U/G Telephone Cable LOS D (S.U.E.*) — T
- U/G Telephone Conduit LOS B (S.U.E.*) — TC
- U/G Telephone Conduit LOS C (S.U.E.*) — TC
- U/G Telephone Conduit LOS D (S.U.E.*) — TC
- U/G Fiber Optics Cable LOS B (S.U.E.*) — T FO
- U/G Fiber Optics Cable LOS C (S.U.E.*) — T FO
- U/G Fiber Optics Cable LOS D (S.U.E.*) — T FO

WATER:

- Water Manhole — W
- Water Meter
- Water Valve
- Water Hydrant
- U/G Water Line LOS B (S.U.E*) — W
- U/G Water Line LOS C (S.U.E*) — W
- U/G Water Line LOS D (S.U.E*) — W
- Above Ground Water Line — A/G Water

TV:

- TV Pedestal — C
- TV Tower
- U/G TV Cable Hand Hole — HH
- U/G TV Cable LOS B (S.U.E.*) — TV
- U/G TV Cable LOS C (S.U.E.*) — TV
- U/G TV Cable LOS D (S.U.E.*) — TV
- U/G Fiber Optic Cable LOS B (S.U.E.*) — TV FO
- U/G Fiber Optic Cable LOS C (S.U.E.*) — TV FO
- U/G Fiber Optic Cable LOS D (S.U.E.*) — TV FO

GAS:

- Gas Valve
- Gas Meter
- U/G Gas Line LOS B (S.U.E.*) — G
- U/G Gas Line LOS C (S.U.E.*) — G
- U/G Gas Line LOS D (S.U.E.*) — G
- Above Ground Gas Line — A/G Gas

SANITARY SEWER:

- Sanitary Sewer Manhole
- Sanitary Sewer Cleanout
- U/G Sanitary Sewer Line — SS
- Above Ground Sanitary Sewer — A/G Sanitary Sewer
- SS Forced Main Line LOS B (S.U.E.*) — FSS
- SS Forced Main Line LOS C (S.U.E.*) — FSS
- SS Forced Main Line LOS D (S.U.E.*) — FSS

MISCELLANEOUS:

- Utility Pole
- Utility Pole with Base
- Utility Located Object
- Utility Traffic Signal Box — S
- Utility Unknown U/G Line LOS B (S.U.E.*) — ?UTL
- U/G Tank; Water, Gas, Oil
- Underground Storage Tank, Approx. Loc. — UST
- A/G Tank; Water, Gas, Oil
- Geoenvironmental Boring
- U/G Test Hole LOS A (S.U.E.*)
- Abandoned According to Utility Records — AATUR
- End of Information — E.O.I.

DocuSign Envelope ID: EBC74B65-4CBF-443C-9286-FBBBF83F7B96

HNTB NORTH CAROLINA, P.C.
343 E. Six Forks Road, Suite 200
Raleigh, North Carolina 27609
NC License No: C-1554

PROJECT REFERENCE NO.	SHEET NO.
U-5319	2A-1
R/W SHEET NO.	
ROADWAY DESIGN ENGINEER	PAVEMENT DESIGN ENGINEER
NORTH CAROLINA PROFESSIONAL SEAL 36786 ENGINEER DAVID M. WHEATLEY 4/13/2018	NORTH CAROLINA PROFESSIONAL SEAL 022896 ENGINEER CLAIR M. MORRISON 4/13/2018

DOCUMENT NOT CONSIDERED FINAL UNLESS ALL SIGNATURES COMPLETED

FINAL PAVEMENT SCHEDULE

C1	PROP. APPROX. 1.5" ASPHALT CONCRETE SURFACE COURSE, TYPE S9.5B, AT AN AVERAGE RATE OF 168 LBS. PER SQ. YD.	S	4" CONCRETE SIDEWALK
C2	PROP. APPROX. 3" ASPHALT CONCRETE SURFACE COURSE, TYPE S9.5B, AT AN AVERAGE RATE OF 168 LBS. PER SQ. YD. IN EACH OF TWO LAYERS.	T	EARTH MATERIAL
C3	PROP. VAR. DEPTH ASPHALT CONCRETE SURFACE COURSE, TYPE S9.5B, AT AN AVERAGE RATE OF 110 LBS. PER SQ. YD. PER 1" DEPTH. TO BE PLACED IN LAYERS NOT LESS THAN 1 1/2" OR GREATER THAN 2" IN DEPTH.	U	EXISTING PAVEMENT
D1	PROP. APPROX. 4" ASPHALT CONCRETE INTERMEDIATE COURSE, TYPE I19.0C, AT AN AVERAGE RATE OF 456 LBS. PER SQ. YD.	R1	2'-6" CURB AND GUTTER
D2	PROP. VAR. DEPTH ASPHALT CONCRETE INTERMEDIATE COURSE, TYPE I19.0C, AT AN AVERAGE RATE OF 114 LBS. PER SQ. YD. PER 1" DEPTH, TO BE PLACED IN LAYERS NOT LESS THAN 2.5" OR GREATER THAN 4" IN DEPTH.	R2	5" MONOLITHIC ISLAND (SURFACE MOUNTED)
E1	PROP. APPROX. 4" ASPHALT CONCRETE BASE COURSE, TYPE B25.0C, AT AN AVERAGE RATE OF 456 LBS. PER SQ. YD.	V	MILLING (VARIABLE)
E2	PROP. VAR. DEPTH ASPHALT CONCRETE BASE COURSE, TYPE B25.0C, AT AN AVERAGE RATE OF 114 LBS. PER SQ. YD. PER 1" DEPTH. TO BE PLACED IN LAYERS NOT LESS THAN 3" OR GREATER THAN 5.5*" IN DEPTH.	W	VARIABLE DEPTH ASPHALT PAVEMENT (SEE STANDARD WEDGING DETAIL
J1	PROP. APPROX. 8" AGGREGATE BASE COURSE		

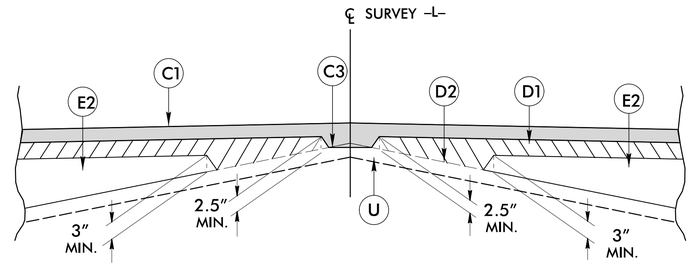

Detail Showing Method of Wedging

NOTE: PAVEMENT EDGE SLOPES ARE 1:1 UNLESS SHOWN OTHERWISE.

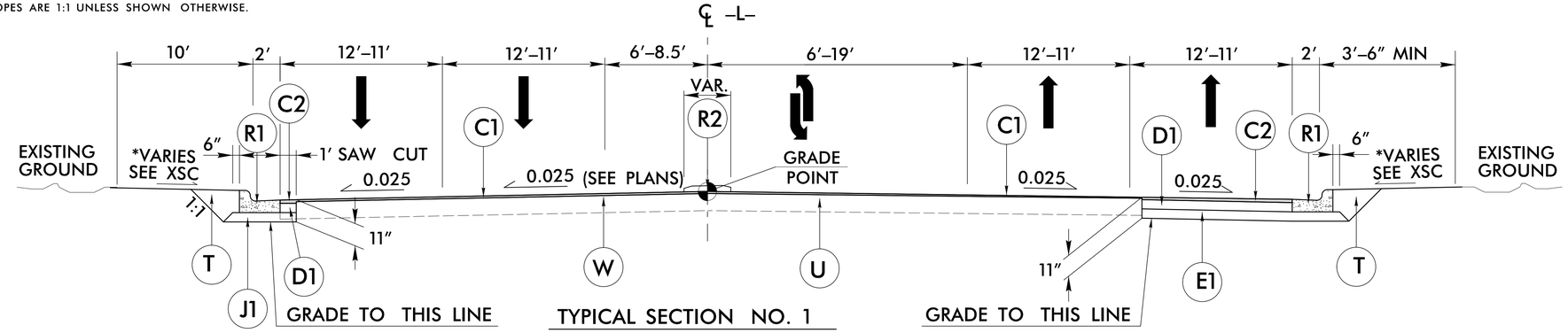

TYPICAL SECTION NO. 1
-L- STA 25+00.00 TO STA 27+00.00

*NOTE: SEE CROSS SECTIONS FOR AREAS OF THE BERM WHICH AVOID IMPACTS TO THE EXISTING SIDEWALK.

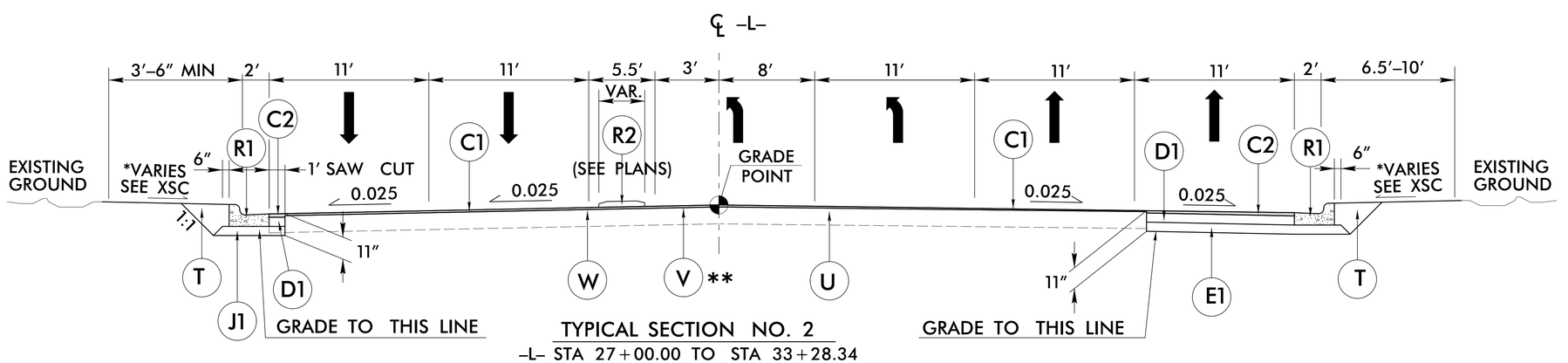

TYPICAL SECTION NO. 2
-L- STA 27+00.00 TO STA 33+28.34

**NOTE: FROM -L- STA 28+00.00 TO STA 30+00.00 MILL EXISTING PAVEMENT

REVISIONS

13-APR-2018 09:11
\Roadway\Proj\sr1308_rdy_typ.dgn
HNTB

DocuSign Envelope ID: EBC74B65-4CBF-443C-9286-FBBBF83F7B96

HNTB NORTH CAROLINA, P.C.
343 E. Six Forks Road, Suite 200
Raleigh, North Carolina 27609
NC License No: C-1554

PROJECT REFERENCE NO.	SHEET NO.
U-5319	2A-2
R/W SHEET NO.	
ROADWAY DESIGN ENGINEER	PAVEMENT DESIGN ENGINEER
NORTH CAROLINA PROFESSIONAL SEAL 36786 ENGINEER DOUGLAS M. WHEATLEY 4/13/2018	NORTH CAROLINA PROFESSIONAL SEAL 022896 ENGINEER CLARK S. MORRISON 4/13/2018

DOCUMENT NOT CONSIDERED FINAL UNLESS ALL SIGNATURES COMPLETED

FINAL PAVEMENT SCHEDULE

C1	PROP. APPROX. 1.5" ACSC, TYPE S9.5B	S	4" CONCRETE SIDEWALK
C2	PROP. APPROX. 3" ACSC, TYPE S9.5B	T	EARTH MATERIAL
C3	PROP. VAR. DEPTH ACSC, TYPE S9.5B	U	EXISTING PAVEMENT
D1	PROP. APPROX. 4" ACIC, TYPE I19.0C	R1	2'-6" CURB AND GUTTER
D2	PROP. VAR. DEPTH ACIC, TYPE I19.0C	R2	5" MONOLITHIC ISLAND (SURFACE MOUNTED)
E1	PROP. APPROX. 4" ACBC, TYPE B25.0C	V	MILLING (VARIABLE)
E2	PROP. VAR. DEPTH ACBC, TYPE B25.0C	W	VARIABLE DEPTH ASPHALT PAVEMENT (SEE STANDARD WEDGING DETAIL
J1	PROP. APPROX. 8" ABC		

NOTE: PAVEMENT EDGE SLOPES ARE 1:1 UNLESS SHOWN OTHERWISE.

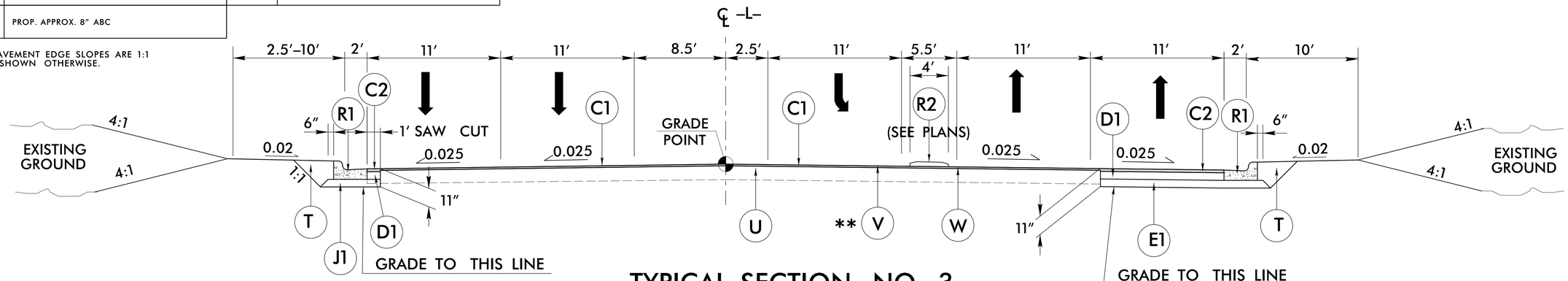

TYPICAL SECTION NO. 3

-L- STA 34+54.35 TO STA 39+00.00

**NOTE: FROM -L- STA 34+54.35 TO STA 36+00.00 MILL EXISTING PAVEMENT

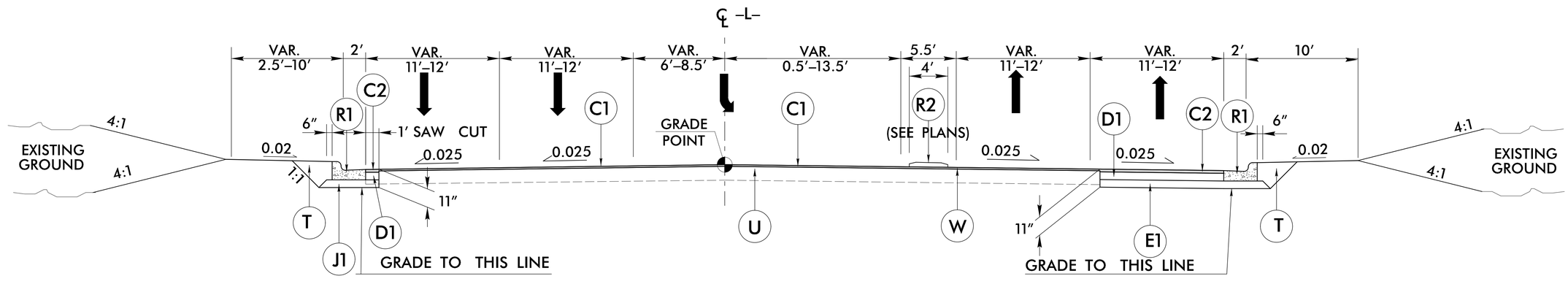

TYPICAL SECTION NO. 4

-L- STA 39+00.00 TO STA 42+00.00

REVISIONS

13-APR-2018 09:11
\Roadway\Proj\sr1308_rdy_typ.dgn
HNTB

DocuSign Envelope ID: EBC74B65-4CBF-443C-9286-FBBBF83F7B96

FINAL PAVEMENT SCHEDULE

C1	PROP. APPROX. 1.5" ACSC, TYPE S9.5B	S	4" CONCRETE SIDEWALK
C2	PROP. APPROX. 3" ACSC, TYPE S9.5B	T	EARTH MATERIAL
C3	PROP. VAR. DEPTH ACSC, TYPE S9.5B	U	EXISTING PAVEMENT
D1	PROP. APPROX. 4" ACIC, TYPE I19.0C	R1	2'–6" CURB AND GUTTER
D2	PROP. VAR. DEPTH ACIC, TYPE I19.0C	R2	5" MONOLITHIC ISLAND (SURFACE MOUNTED)
E1	PROP. APPROX. 4" ACBC, TYPE B25.0C	V	MILLING (VARIABLE)
E2	PROP. VAR. DEPTH ACBC, TYPE B25.0C	W	VARIABLE DEPTH ASPHALT PAVEMENT (SEE STANDARD WEDGING DETAIL
J1	PROP. APPROX. 8" ABC		

NOTE: PAVEMENT EDGE SLOPES ARE 1:1 UNLESS SHOWN OTHERWISE.

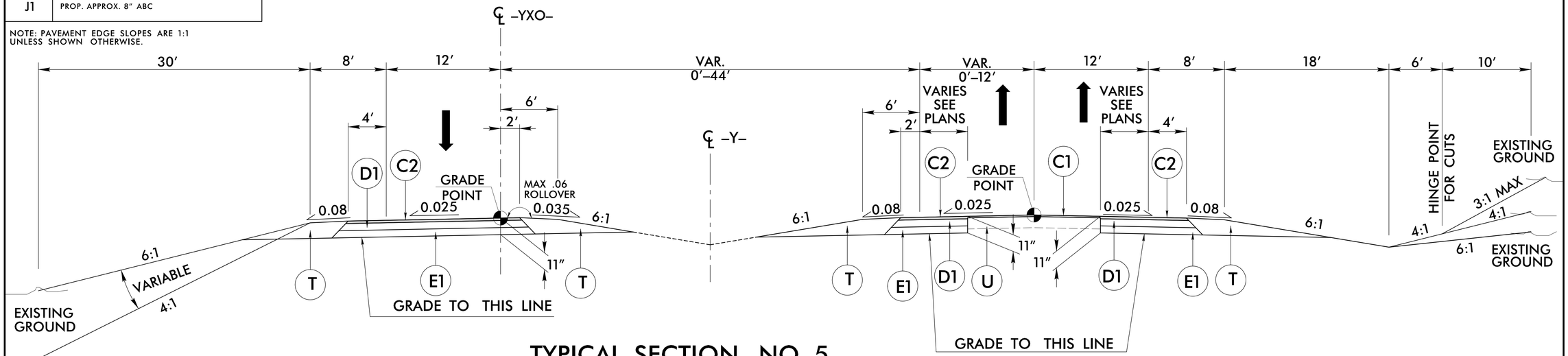

TYPICAL SECTION NO. 5

–Y– STA 89+90.00 TO STA 92+17.08

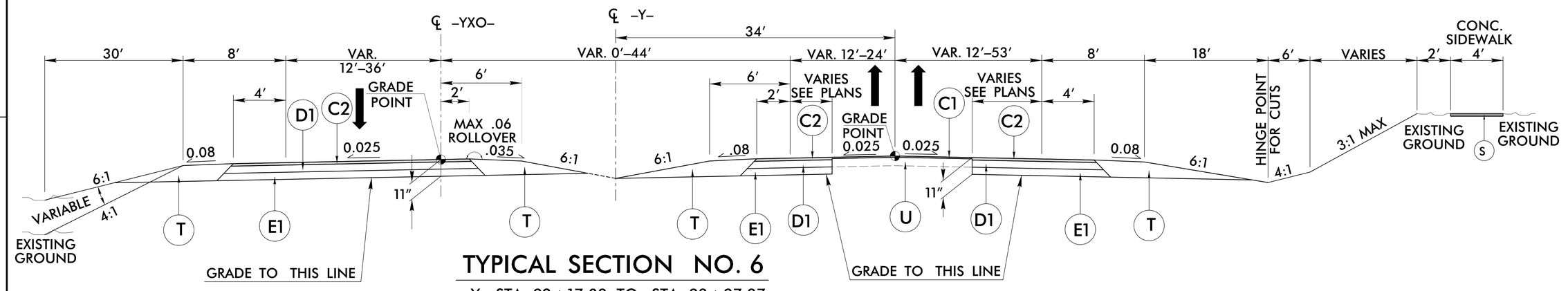

TYPICAL SECTION NO. 6

–Y– STA 92+17.08 TO STA 93+97.37

HNTB NORTH CAROLINA, P.C.
343 E. Six Forks Road, Suite 200
Raleigh, North Carolina 27609
NC License No: C-1554

PROJECT REFERENCE NO.	SHEET NO.
U–5319	2A–3
R/W SHEET NO.	

ROADWAY DESIGN ENGINEER

NORTH CAROLINA PROFESSIONAL SEAL 36786 ENGINEER
Digitally signed by DOUGLAS A. SELLERS
4/13/2018

PAVEMENT DESIGN ENGINEER

NORTH CAROLINA PROFESSIONAL SEAL 022896 ENGINEER
Digitally signed by CHRISTOPHER S. MORRISON
4/13/2018

DOCUMENT NOT CONSIDERED FINAL UNLESS ALL SIGNATURES COMPLETED

REVISIONS

13-APR-2018 09:11
\Roadway\Proj\sr1308_rdy_typ.dgn
HNTB

DocuSign Envelope ID: EBC74B65-4CBF-443C-9286-FBBBF83F7B96

REVISIONS

FINAL PAVEMENT SCHEDULE

C1	PROP. APPROX. 1.5" ACSC, TYPE S9.5B	S	4" CONCRETE SIDEWALK
C2	PROP. APPROX. 3" ACSC, TYPE S9.5B	T	EARTH MATERIAL
C3	PROP. VAR. DEPTH ACSC, TYPE S9.5B	U	EXISTING PAVEMENT
D1	PROP. APPROX. 4" ACIC, TYPE I19.0C	R1	2'–6" CURB AND GUTTER
D2	PROP. VAR. DEPTH ACIC, TYPE I19.0C	R2	5" MONOLITHIC ISLAND (SURFACE MOUNTED)
E1	PROP. APPROX. 4" ACBC, TYPE B25.0C	V	MILLING (VARIABLE)
E2	PROP. VAR. DEPTH ACBC, TYPE B25.0C	W	VARIABLE DEPTH ASPHALT PAVEMENT (SEE STANDARD WEDGING DETAIL
J1	PROP. APPROX. 8" ABC		

NOTE: PAVEMENT EDGE SLOPES ARE 1:1 UNLESS SHOWN OTHERWISE.

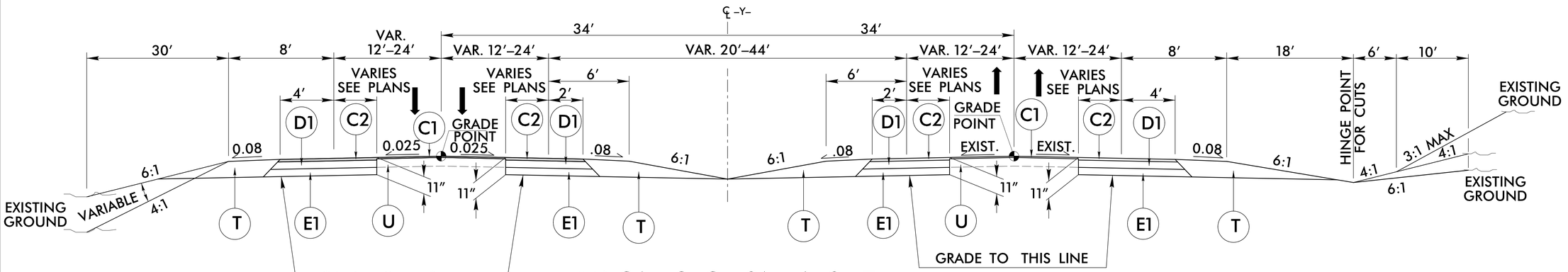

TYPICAL SECTION NO. 7

–Y– STA 93+97.37 TO STA 99+52.70

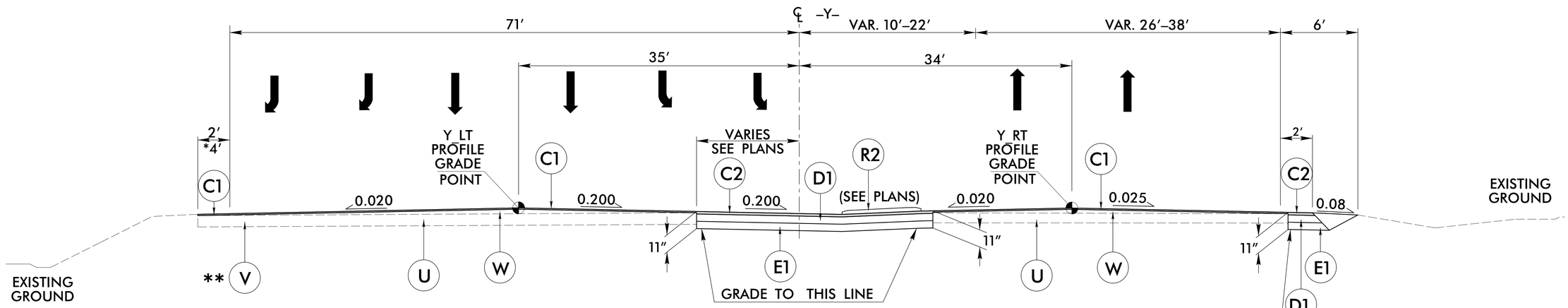

TYPICAL SECTION NO. 8

–Y– STA 100+59.30 TO STA 108+50.00

* –Y– STA 104+42.46 TO STA 108+50.00 LT

**NOTE: FROM –Y– STA 100+50.00 TO STA 102+00.00 MILL EXISTING PAVEMENT

HNTB NORTH CAROLINA, P.C.
343 E. Six Forks Road, Suite 200
Raleigh, North Carolina 27609
NC License No: C-1554

PROJECT REFERENCE NO.	SHEET NO.
U–5319	2A–4
R/W SHEET NO.	

ROADWAY DESIGN ENGINEER

NORTH CAROLINA PROFESSIONAL SEAL 36786 ENGINEER DAVID C. RAGSDALE

Docusigned by: DAVID C. RAGSDALE AB7893E8F8E04DM...

4/13/2018

PAVEMENT DESIGN ENGINEER

NORTH CAROLINA PROFESSIONAL SEAL 022896 ENGINEER CLAIRE S. MORRISON

Docusigned by: CLAIRE S. MORRISON BDA11E8B8E4E4C6...

4/13/2018

DOCUMENT NOT CONSIDERED FINAL UNLESS ALL SIGNATURES COMPLETED

13-APR-2018 09:11
\Roadway\Proj\sr1308_rdy_typ.dgn
#NTB

DocuSign Envelope ID: F7730022-487C-46E5-BD05-1BFFC512166D

5/14/99

INTERSECTION AND DIMENSION DETAIL
–L– AND –Y–

HNTB NORTH CAROLINA, P.C.
343 E. Six Forks Road, Suite 200
Raleigh, North Carolina 27609
NC License No: C-1554

PROJECT REFERENCE NO.	SHEET NO.
U–5319	2B–1
R/W SHEET NO.	

ROADWAY DESIGN ENGINEER
NORTH CAROLINA PROFESSIONAL SEAL 36786 ENGINEER
Digitally signed by DOUGLAS M. WHITLEY
ABT6B6A4-23A5-4A3E-A1E1-A5B5B5B5B5B5
4/12/2018

HYDRAULICS ENGINEER
NORTH CAROLINA PROFESSIONAL SEAL 15764 ENGINEER
Digitally signed by JAMES A. BYRD
235929B5-B5B5-B5B5-B5B5-B5B5B5B5B5B5
4/12/2018

DOCUMENT NOT CONSIDERED FINAL UNLESS ALL SIGNATURES COMPLETED

NAD 83/2007

–L– 25+00

–L– 30+00

MATCHLINE SEE SHEET 7
–Y– STA 102+50.00

–L– POT STA 34+03.50 =
–Y– POT STA 100+17.09

110′ EOT BAY TAPER LT
100′ MEDIAN TAPER LT
+05.32 –L– 0.07′ LT 5.32′ R
+00.00
+10.11
+79.08 –L– 81.50′ LT 55.75′ R
+15.83 –L– 38.25′ LT 1.0′ R
+32.62 –L– 59.85′ LT 2.0′ R
+78.93 –L– 71.50′ LT 45.75′ R
+46.07 –L– 38.25′ LT 1.0′ R
30′ R
30′ R
+13.74 8:1 TAPER
+87.74 –Y–
50′ R
+80.00 –L– 5.75′ LT 2.0′ R
179′ R
+12.72 –Y– 10.5′ RT 7.5′ R
2′ PS
72′
1′
21′
4′
2′ PS
26′
200′ IEOT TAPER RT
+00.00
–L– 35+00
+54.29 –Y–
8:1 TAPER
+28.29 –Y–
50′ R
+20.11
55′
13.5′
22.5′
+39.65
+53.00 –L– 16.25′ RT 2.00′ R
+85.08 54.64′ RT
55′ R
+25.66 –Y– 73.39′ LT 25.00′ R
MATCHLINE SEE SHEET 5
–L– STA 36+00.00
+31.3′
+12.0′
+4.5′
33′
+8.5′
+10.32
+4.5′
+5.5′
+8.0′
+63.66
+36′
+6
+57.20
+80.31
+44′
+80.18
+55
+79.08
+78.93
+97.39
+83.19
+3′
+03.28
CAT–1
GREU TL–3
PROP DOUBLE POST GUARDRAIL
+00.00
35′ R
45′ R
+00.00
+00.00
+00.00
GREU TL–3
CAT–1
PROP DOUBLE POST GUARDRAIL
43′ R
+01.77 –Y–
+94.46 –Y–
N 78° 53′ 41.4″ E
+16.09 –Y– 2.58′ LT 8.00′ R
100′ R
114′ R
50′ R
+28.18 –Y–
100′ MEDIAN BAY TAPER RT
100′ EOT BAY TAPER RT
300′ EOT TAPER RT
200′ EOT BAY TAPER RT
2′ PS
4′ PS
10′
2′ PS
22′
4′ PS
36′
48′
–Y–
MATCHLINE SEE SHEET 6
–Y– STA 98+00.00

50 25 0 50 100
PLANS

FOR –L– AND –Y– ALIGNMENTS, SEE SHEET 4
FOR –L– PROFILE, SEE SHEET 8
FOR –Y– PROFILE, SEE SHEET 9

(2-APR-2018 09:19
N:\Projects\Proj\5r1308_rdy_detail_2B-1.dgn
HNTB

DocuSign Envelope ID: F7730022-487C-46E5-BD05-1BFFC512166D

COMPUTED BY: ABH **DATE:** 06/13/2017

CHECKED BY: CRG **DATE:** 11/7/2017

"N" = DISTANCE FROM EDGE OF LANE TO FACE OF GUARDRAIL
TOTAL SHOULDER WIDTH = DISTANCE FROM EDGE OF TRAVEL LANE TO SHOULDER BREAK POINT.
FLARE LENGTH = DISTANCE FROM LAST SECTION OF PARALLEL GUARDRAIL TO END OF GUARDRAIL
W = TOTAL WIDTH OF FLARE FROM BEGINNING OF TAPER TO END OF GUARDRAIL

DIVISION OF HIGHWAYS
STATE OF NORTH CAROLINA

GUARDRAIL SUMMARY

PROJECT REFERENCE NO.	SHEET NO.
U-5319	3B-1

G = GATING IMPACT ATTENUATOR TYPE 350
NG = NON-GATING IMPACT ATTENUATOR TYPE 350

SURVEY LINE	BEG. STA.	END STA.	LOCATION	LENGTH			WARRANT POINT		"N" DIST. FROM E.O.L.	TOTAL SHOUL WIDTH	FLARE LENGTH		W		ANCHORS					IMPACT ATTENUATOR TYPE 350		SINGLE FACED CONCRETE BARRIER	REMOVE EXISTING GUARDRAIL	REMOVE & STOCKPILE EXISTING GUARDRAIL	REMARKS
				STRAIGHT	SHOP CURVED	DOUBLE FACED	APPROACH END	TRAILING END			APPROACH END	TRAILING END	APPROACH END	TRAILING END	GREU TL-3	M-350	CAT-1	AT-1	B-77	G	NG				
-L-	29+82.28	30+63.51	RT	81.25'					2.0'		1.0'		1.00'		1		1								
L	32+29.23	33+08.14	RT	81.25'	25				2.0'		1.0'		1.00'		1		1								
		SUBTOTAL		162.50'	25.00'																				
	LESS ANCHOR DEDUCTIONS																								
	GREU TL-3	2 @ 50.00'	=	100.00'																					
	CAT-1	2 @ 6.25'	=	12.50'																					
		TOTAL		50.00'	25.00'										2	0	2	0	0	0	0	0	0	0	
		SAY		62.50'	37.50'																				
			ADDITIONAL POSTS= 18 EA (8 FOR DOUBLE POST)																						

COMPUTED BY: CRG DATE: 1/29/18
CHECKED BY: RTH DATE: 1/29/18

PROJECT NO.	SHEET NO.
U-5319	3B-2

SUMMARY OF EARTHWORK IN CUBIC YARDS

Station	Station	Uncl. Excav.	Undercut	Embank. +%	Borrow	Waste
-L-						
-L- 25+00.00	-L- 42+00.00	1208		1174		34
SUBTOTALS:		1208		1174		34
-Y-						
-Y- 90+00.00	-Y- 99+50.00	1574		3800	2226	
-Y- 101+00.00	-Y- 108+50.00	209		573	364	
SUBTOTALS:		1783		4373	2590	
TOTALS:		2991		5547	2590	34
UNDERCUT BY CONTINGENCY:					1000	
WASTE IN LIEU OF BORROW:					-34	-34
PROJECT TOTALS:		2991		5547		0
GRAND TOTALS:		**2991**				0
SAY:		**3300**				
SELECT GRANULAR MATERIAL:		**1000**				
SHOULDER BORROW:		**750**				
DDE:		**445**				
SHALLOW UNDERCUT:		**2100**				

PAVEMENT REMOVAL SUMMARY IN SQUARE YARDS

SURVEY LINE	Station	Station	LOCATION LT/RT/CL	ASPHALT REMOVAL	ASPHALT BREAKUP	CONCRETE REMOVAL	CONCRETE BREAKUP
-Y-	90+93	92+37	RT	61.48			
	93+20	93+94	RT	116.69			
	92+20	92+37	LT	26.28			
	93+20	94+16	LT	51.29			
		TOTAL:		**255.73**			
		SAY:		**290.00**			

DocuSign Envelope ID: F7730022-487C-46E5-BD05-1BFFC512166D

RAL/084

COMPUTED BY: John Watson, PE DATE: 12/04/2017

CHECKED BY: Allen Hodges, EI DATE: 12/04/2017

NORTH CAROLINA DEPARTMENT OF TRANSPORTATION
DIVISION OF HIGHWAYS

PROJECT NO.	SHEET NO.
U-5319	3D-1

Note: Invert Elevations indicated are for Bid Purposes only and shall not be used for project construction stakeout.
See "Standard Specifications For Roads and Structures, Section 300-5".

LIST OF PIPES, ENDWALLS, ETC. (FOR PIPES 48 INCHES & UNDER)

| LINE & STATION | OFFSET | STRUCTURE NUMBER FROM | STRUCTURE NUMBER TO | TOP ELEVATION FT. | INVERT ELEVATION FT. | INVERT ELEVATION FT. | MINIMUM REQUIRED SLOPE % | Side Drain Pipe (RCP, CSP, CAAP, HDPE, or PVC) SIZE: 12 | 15 | 18 | 24 | 30 | 36 | 42 | 48 | DO NOT USE RCP | DO NOT USE CSP | DO NOT USE CAAP | DO NOT USE HDPE | DO NOT USE PVC | R. C. PIPE CLASS IV SIZE: 12 | 15 | 18 | 24 | 30 | 36 | 42 | 48 | 54 | 60 | 66 | 72 | 78 | 84 | STRUCTURAL PLATE PIPE SIZE: 60 | 66 | 72 | ENDWALLS STD. 838.11 (UNLESS NOTED OTHERWISE) CY | REINFORCED ENDWALLS CY | DRAINAGE STRUCTURE MASONRY CY | QUANTITIES FOR DRAINAGE STRUCTURES NOTE: TOTAL LIN. FT. FOR PAY QUANTITY SHALL BE A + (1.3 X B) A: 0' THRU 5' EACH | A: 5' THRU 10' LIN. FT. | A: 10' AND ABOVE LIN. FT. | B | C.B. STD. 840.01 OR STD. 840.02 | FRAME, GRATES, AND HOOD STD. 840.03 GRATE TYPE E | F | G | CONCRETE TRANSITIONAL SECTION D.I. STD. 852.04 OR STD. 852.06 | C.B. STD. 852.05 | OPEN THROAT C.B. STD. 840.04 OR STD. 840.05 | CONCRETE BRIDGE APPROACH D.I. STD. 840.13 | D.I. STD. 840.14 OR STD. 840.15 | D.I. FRAME AND GRATES STD. 840.16 | G.D.I. TYPE "A" STD. 840.17 OR STD. 840.26 | G.D.I. TYPE "B" STD. 840.18 OR STD. 840.27 | G.D.I. TYPE "D" STD. 840.19 OR STD. 840.28 | G.D.I. (W.S. FLAT) FRAME WITH GRATE STD. 840.20 | G.D.I. (W.S. FLAT) FRAME W/ 2 GRATES STD. 840.20 | G.D.I. (W.S. SAG) FRAME W/ GRATE STD. 840.22 | G.D.I. (W.S. SAG) FRAME W/ 2 GRATES STD. 840.22 | G.D.I. (N.S. SAG) FRAME W/ GRATE STD. 840.24 | G.D.I. (N.S. SAG) FRAME W/ 2 GRATES STD. 840.24 | G.D.I. (N.S. FLAT) FRAME W/ GRATE STD. 840.29 | G.D.I. (N.S. FLAT) FRAME W/ 2 GRATES STD. 840.29 | DRIVEWAY D.I. STD. 840.30 | FRAME W/ GRATE FOR DRIVEWAY STD. 840.30 | J.B. STD. 840.31 OR STD. 840.32 | ANGLED VANE GRATES AND FRAMES STD. 840.33 | T.B.J.B. STD. 840.34 | T.B.D.I. STD. 840.35 | T.B.D.I. FOR STEEL GRATES STD. 840.36 | STEEL FRAME WITH TWO GRATES STD. 840.37 | SPRING BOX STD. 840.41 | M.H. STD. 840.51, STD. 840.52, OR STD. 840.53 | M.H. FRAME AND COVER STD. 840.54 | CONVERT EXISTING C.B. TO J.B. | CONVERT EXISTING C.B. TO D.I. | CONVERT EXISTING D.I. TO J.B. | CONVERT EXISTING J.B. TO D.I. | ADJUST C.B. | ADJUST D.I. | ADJUST M.H. | FLOWABLE FILL CY | CONCRETE COLLARS CL. "B" STD. 840.72 CY | CONCRETE AND BRICK PIPE PLUG STD. 840.71 CY | PIPE REMOVAL LIN. FT. | REMARKS |
|---|---|---

DocuSign Envelope ID: F7730022-487C-46E5-BD05-1BFFC512166D

RALD/84

COMPUTED BY: John Watson, PE DATE: 12/04/2017

CHECKED BY: Allen Hodges, EI DATE: 12/04/2017

PROJECT NO.	SHEET NO.
U-5319	3D-2

NORTH CAROLINA DEPARTMENT OF TRANSPORTATION
DIVISION OF HIGHWAYS

Note: Invert Elevations indicated are for Bid Purposes only and shall not be used for project construction stakeout.
See "Standard Specifications For Roads and Structures, Section 300-5".

LIST OF PIPES, ENDWALLS, ETC. (FOR PIPES 48 INCHES & UNDER)

| LINE & STATION | OFFSET | STRUCTURE NUMBER FROM | STRUCTURE NUMBER TO | TOP ELEVATION FT. | INVERT ELEVATION FT. | INVERT ELEVATION FT. | MINIMUM REQUIRED SLOPE % | Side Drain Pipe (RCP, CSP, CAAP, HDPE, or PVC) SIZE: 12 | 15 | 18 | 24 | 30 | 36 | 42 | 48 | DO NOT USE RCP | DO NOT USE CSP | DO NOT USE CAAP | DO NOT USE HDPE | DO NOT USE PVC | R. C. PIPE CLASS IV SIZE: 12 | 15 | 18 | 24 | 30 | 36 | 42 | 48 | 54 | 60 | 66 | 72 | 78 | 84 | STRUCTURAL PLATE PIPE 60 | 66 | 72 | ENDWALLS STD. 838.11, 838.31 OR STD. 838.41 (UNLESS NOTED OTHERWISE) CY | REINFORCED ENDWALLS CY | DRAINAGE STRUCTURE MASONRY CY | QUANTITIES FOR DRAINAGE STRUCTURES NOTE: TOTAL LIN. FT. FOR PAY QUANTITY SHALL BE A + (1.3 X B) A: 0' THRU 5' EACH | A: 5' THRU 10' LIN. FT. | B: 10' AND ABOVE LIN. FT. | C.B. STD. 840.01 OR STD. 840.02 | FRAME, GRATES, AND HOOD STD. 840.03 GRATE TYPE E | F | G | CONCRETE TRANSITIONAL SECTION D.I. STD. 852.04 OR STD. 852.06 | C.B. STD. 852.05 | OPEN THROAT C.B. STD. 840.04 OR STD. 840.05 | CONCRETE BRIDGE APPROACH D.I. STD. 840.13 | D.I. STD. 840.14 OR STD. 840.15 | D.I. FRAME AND GRATES STD. 840.16 | G.D.I. TYPE "A" STD. 840.17 OR STD. 840.26 | G.D.I. TYPE "B" STD. 840.18 OR STD. 840.27 | G.D.I. TYPE "D" STD. 840.19 OR STD. 840.28 | G.D.I. (W.S. FLAT) FRAME WITH GRATE STD. 840.20 | G.D.I. (W.S. FLAT) FRAME W/ 2 GRATES STD. 840.20 | G.D.I. (W.S. SAG) FRAME W/ GRATE STD. 840.22 | G.D.I. (W.S. SAG) FRAME W/ 2 GRATES STD. 840.22 | G.D.I. (N.S. SAG) FRAME W/ GRATE STD. 840.24 | G.D.I. (N.S. SAG) FRAME W/ 2 GRATES STD. 840.24 | G.D.I. (N.S. FLAT) FRAME W/ GRATE STD. 840.29 | G.D.I. (N.S. FLAT) FRAME W/ 2 GRATES STD. 840.29 | DRIVEWAY D.I. STD. 840.30 | FRAME W/ GRATE FOR DRIVEWAY STD. 840.30 | J.B. STD. 840.31 OR STD. 840.32 | ANGLED VANE GRATES AND FRAMES STD. 840.33 | T.B.J.B. STD. 840.34 | T.B.D.I. STD. 840.35 | T.B.D.I. FOR STEEL GRATES STD. 840.36 | STEEL FRAME WITH TWO GRATES STD. 840.37 | SPRING BOX STD. 840.41 | M.H. STD. 840.51, STD. 840.52, OR STD. 840.53 | M.H. FRAME AND COVER STD. 840.54 | CONVERT EXISTING C.B. TO J.B. | CONVERT EXISTING C.B. TO D.I. | CONVERT EXISTING D.I. TO J.B. | CONVERT EXISTING J.B. TO D.I. | ADJUST C.B. | ADJUST D.I. | ADJUST M.H. | FLOWABLE FILL CY | CONCRETE COLLARS CL. "B" STD. 840.72 CY | CONCRETE AND BRICK PIPE PLUG STD. 840.71 CY | PIPE REMOVAL LIN. FT. | REMARKS |
|---|---|---

DocuSign Envelope ID: F7730022-487C-46E5-BD05-1BFFC512166D

COMPUTED BY: Cory Grell DATE: 1/25/18
CHECKED BY: Roy Tellier DATE: 1/25/18

PROJECT NO.	SHEET NO.
U-5319	3G-1

STATE OF NORTH CAROLINA
DIVISION OF HIGHWAYS

SUMMARY OF SUBSURFACE DRAINAGE

LINE	Station	Station	Location (LT/RT/CL)	Drain Type* (UD/BD/SD)	LF
CONTINGENCY				SD	1000
				TOTAL LF:	1000

***UD = Underdrain**

***BD = Blind Drain**

***SD = Subsurface Drain**

SUMMARY OF AGGREGATE SUBGRADE/STABILIZATION

LINE	Station	Station	Aggregate Type ASU/AST	Aggregate Thickness INCHES	Shallow Undercut CY	Class IV Subgrade Stabilization TONS	Geotextile for Soil Stabilization SY	Stabilizer Aggregate TONS	Class IV Aggregate Stabilization TONS
-L-	25+00	42+00	ASU	12	900	1700	2700		
-Y-	90+00	99+75	ASU	12	1100	2080	3300		
CONTINGENCY					100	190	800		
				TOTAL CY/TONS/SY:	2100	3970	6800*		

ASU = Aggregate Subgrade, AST = Aggregate Stabilization

***Total square yards of Geotextile for Soil Stabilization is only the estimated quantity for ASU/AST and may only represent a portion of the geotextile quantity shown in the Item Sheets of the Proposal.**

DocuSign Envelope ID: F7730022-487C-46E5-BD05-1BFFC512166D

PROJ. REFERENCE NO.	SHEET NO.
U-5319	3P-1

STATE OF NORTH CAROLINA
DIVISION OF HIGHWAYS

PARCEL INDEX SHEET

PARCEL No.	SHEET No.	PROPERTY OWNER NAME
1	4	RIVER OF LIFE INC
2	4	MILTON TURNER JR & ANNE SCHAEFFER
3	4	KINSTON ENTERPRISES LLC
4	4	F C W & P PROPERTIES LLC
4A	4	F C W & P PROPERTIES LLC
5	4,6	MDI MANAGEMENT LLC
6	4,6	C4 JACKSONVILLE LLC
7	4	CVS 5594 NC LLC
8	4,5,7	A. TAB WILLIAMS, JR.
9	5	BAILEY & ASSOCIATES INC
10	5	WILLIAMSBURG CROSSINGS, LLC
11	4,5,6	MILTON TURNER JR & ANNE SCHAEFFER

PARCEL No.	SHEET No.	PROPERTY OWNER NAME

DocuSign Envelope ID: F7730022-487C-46E5-BD05-1BFFC512166D

HNTB NORTH CAROLINA, P.C.
343 E. Six Forks Road, Suite 200
Raleigh, North Carolina 27609
NC License No: C-1554

PROJECT REFERENCE NO.	SHEET NO.
U-5319	4
R/W SHEET NO.	

ROADWAY DESIGN ENGINEER
NORTH CAROLINA PROFESSIONAL SEAL 36786 ENGINEER DAVID M. WHEATLEY
Docusigned by: David M. Wheatley 2000B0E4A4F4E1...
4/12/2018

HYDRAULICS ENGINEER
NORTH CAROLINA PROFESSIONAL SEAL 15764 ENGINEER JAMES A. BYRD
Docusigned by: James A. Byrd 2000B0E4A4F4E1...
4/12/2018

DOCUMENT NOT CONSIDERED FINAL UNLESS ALL SIGNATURES COMPLETED

REVISIONS
5/14/99
Right-of-way Revision 07-14-2017 - Changed Parcel 2 South of SR 2071 to Parcel 4 Split Into Parcel 4 & 4A Added Do Not Disturb Sign to Parcel 6 DMW
Right-of-way Revision 08-15-2017 - Parcel 6 ROW Flag Change for Flag +00.00 -Y- 101.00' LT

NAD 83/2007

EXISTING TRAFFIC SIGNAL

MATCHLINE SEE SHEET 7
-Y- STA 102+50.00

MATCHLINE SEE SHEET 5
-L- STA 36+00.00

MATCHLINE SEE SHEET 6
-Y- STA 98+00.00

BEGIN TIP PROJECT U-5319
BEGIN CONSTRUCTION
-L- POT STA 25+00.00

-L- 25+00

-L- 30+00

-BL- 2

JACKSONVILLE CITY LIMITS

1 RIVER OF LIFE INC
DB 2848 PG 636
PB 53 PG 38

2 MILTON TURNER JR & ANNE SCHAEFFER
DB 4367 PG 561
PB 68 PG 131

3 KINSTON ENTERPRISES LLC
DB 4210 PG 502
PB 68 PG 131

4 F C W & P PROPERTIES LLC
DB 2930 PG 903
PB 68 PG 173

4A F C W & P PROPERTIES LLC
DB 2930 PG 903
PB 68 PG 173

5 MDI MANAGEMENT LLC
DB 4071 PG 734
PB 68 PG 191

6 C4 JACKSONVILLE LLC
DB 4207 PG 486
PB 68 PG 191

7 CVS 5594 NC LLC
DB 2877 PG 306
PB 53 PG 69

8 A. TAB WILLIAMS, JR.
DB 1344 PG 308

11 MILTON TURNER JR & ANNE SCHAEFFER
DB 4367 PG 561
PB 47 PG 127

TIE TO EX. CURB AND GUTTER
+00.00 -L-
49.00' RT

TIE TO EXISTING SIDEWALK
+00.00 -L-
82.00' LT
+70.00 -L-
57.00' LT

PROP. 5" MONOLITHIC CONCRETE ISLAND (SURFACE MOUNTED)
-L- POT STA 34+03.50 =
-Y- POT STA 100+17.09

PROP. 5" MONOLITHIC CONCRETE ISLAND (SURFACE MOUNTED)
+65.00 -L-
82.00' LT
+85.00 -L-
51.00' LT

TIE TO EXISTING SIDEWALK

TIE TO EXISTING SIDEWALK
+00.00 -L-
46.97' LT

TIE TO EX. SIDEWALK
+15.20 -L-
55.70' RT

+57.00 -L-
57.00' RT
66.50' RT

35' R TIE TO EXISTING CURB
+74.00 -L-
87.00' RT

+40.00 -L-
87.00' RT

45' R TIE TO EXISTING CURB
+30.00 -L-
53.94' RT
67.00' RT

+00.00 -L-
55.20' RT
67.00' RT

+00.00 -L-
56.00' RT
51.00' RT

SIDEWALK TO REMAIN IN PLACE
+00.00 -L-
62.00' RT
67.00' RT

+32.40 -L-
67.00' RT
73.98 RT

TIE TO EXISTING SIDEWALK
DO NOT DISTURB SIGN
+64.00 -L-
62.00' RT
75.22' RT

+00.00 -Y-
101.00' LT

PROP. 5" MONOLITHIC CONCRETE ISLAND (SURFACE MOUNTED)

SIDEWALK TO REMAIN IN PLACE

+20.00 -L-
56.00' RT
66.00' RT
+50.00 -Y-
99.00' RT
+32.00 -Y-
99.00' RT

TIE TO EXISTING SIDEWALK

SIDEWALK TO REMAIN IN PLACE

RETAIN MONOLITHIC ISLAND

SPEC. CUT DITCH SEE DETAIL 1

REMOVE DI AND 4' OF 15" RCP (0446)

CONVERT DI TO TB JB w/MH

CONVERT BLIND JB TO TB JB w/MH

CONVERT JB w/SLAB LID TO TB JB w/MH

CONVERT CB TO TB JB w/MH

PLUG & FILL

S 21° 35' 43.6" E

Y- S 78° 53' 41.4" E

SR 1308 (GUM BRANCH RD.) PAVEMENT WIDTH VARIES

SR 1308 GUM BRANCH RD. PAVEMENT WIDTH VARIES

SR 1308 (GUM BRANCH RD.) PAVEMENT WIDTH VARIES

GPS SR1308-I

SR 2071 (WESTERN BLVD.) 90' RW

TRAFFIC DIAGRAM

AADT YEAR 2015 / 2040

NC 53 (Western Blvd)

	14,200 / 24,000	
10,000 / 16,900		3,000 / 5,100
SR 1308 (Gum Branch Rd) 28,300 / 52,600		21,500 / 41,200 SR 1308 (Gum Branch Rd)
500 / 800		700 / 1,200
	2,400 / 4,000	

SR 2071 (Western Blvd)

DETAIL 1
SPECIAL CUT DITCH
(Not to Scale)

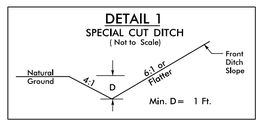

FROM STA. -Y- 93+50 TO 96+00 RT.
FROM STA. -Y- 98+00 TO 98+50 LT.

FOR -Y- INTERSECTION DETAIL, SEE SHEET 2B-1
FOR -L- PROFILE, SEE SHEET 8
FOR -Y- PROFILE, SEE SHEET 9

12-APR-2018 09:19
H:\Projects\U-5319\Roadway\Proj\sr1308_rdy_psh4.dgn
HNTB

DocuSign Envelope ID: F7730022-487C-46E5-BD05-1BFFC512166D

HNTB NORTH CAROLINA, P.C.
343 E. Six Forks Road, Suite 200
Raleigh, North Carolina 27609
NC License No: C-1554

PROJECT REFERENCE NO.	SHEET NO.
U-5319	5
R/W SHEET NO.	
ROADWAY DESIGN ENGINEER	HYDRAULICS ENGINEER
NORTH CAROLINA PROFESSIONAL SEAL 36786 ENGINEER DOUGLAS M. WHEATLEY 4/12/2018	NORTH CAROLINA PROFESSIONAL SEAL 15764 ENGINEER JAMES A. BYRD 4/12/2018

DOCUMENT NOT CONSIDERED FINAL UNLESS ALL SIGNATURES COMPLETED

REVISIONS

Right-of-way Revision 07-14-2017 - New Property Owner Added to Final Survey is now Parcel 10. Milton Turner Jr & Anne Schaeffer Parcel Number Changed from Parcel 2 to Parcel 11. DMW

5/14/99

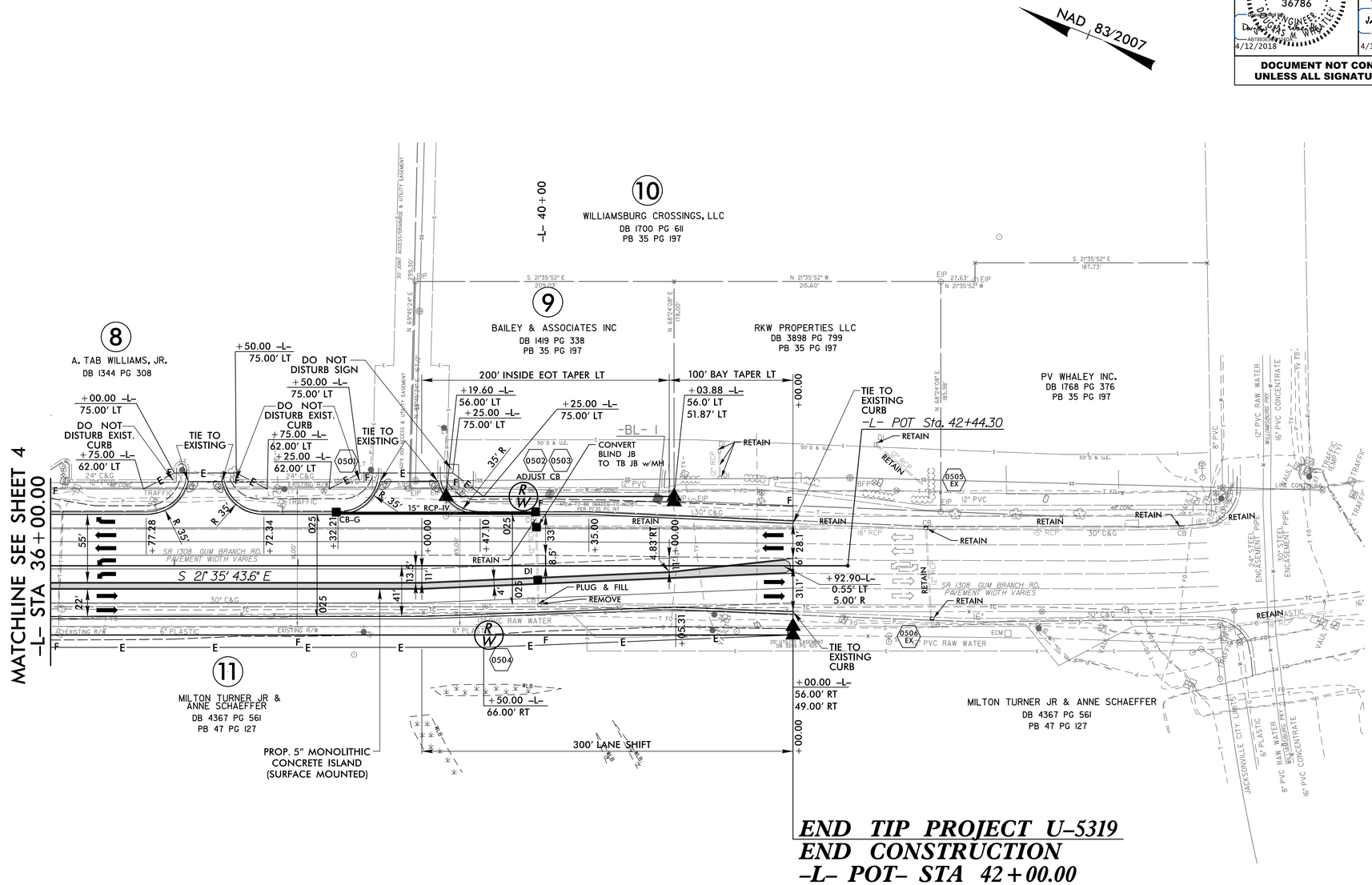

FOR -L- PROFILE, SEE SHEET 8

12-APR-2018 09:19
\Roadway\Proj\sr1308_rdy_psh5.dgn
HNTB

DocuSign Envelope ID: F7730022-487C-46E5-BD05-1BFFC512166D

HNTB NORTH CAROLINA, P.C.
343 E. Six Forks Road, Suite 200
Raleigh, North Carolina 27609
NC License No: C-1554

PROJECT REFERENCE NO.	SHEET NO.
U-5319	6
R/W SHEET NO.	

ROADWAY DESIGN ENGINEER
NORTH CAROLINA PROFESSIONAL SEAL 36786 ENGINEER
4/12/2018

HYDRAULICS ENGINEER
NORTH CAROLINA PROFESSIONAL SEAL 15764 ENGINEER
4/12/2018

DOCUMENT NOT CONSIDERED FINAL UNLESS ALL SIGNATURES COMPLETED

REVISIONS
5/14/99
Right-of-way Revision 07-14-2017 - Milton Turner Jr & Anne Schaeffer Parcel Number Changed From Parcel 2 to Parcel 11. DMW
Right-of-way Revision 08-15-2017 - Parcel 6, Removal of Stray Construction Easement Line and Corresponding ROW Flags.

-Y-	-YXO-			
PI Sta 88+21.77	PI Sta 10+45.66	PI Sta 11+47.32	PI Sta 12+67.71	PI Sta 13+69.03
Δ = 34° 33' 02.5" (RT)	Δ = 2° 45' 58.8" (RT)	Δ = 24° 08' 21.6" (LT)	Δ = 31° 00' 40.1" (RT)	Δ = 2° 16' 03.0" (RT)
D = 2° 58' 35.1"	D = 3° 01' 47.7"	D = 21° 52' 07.0"	D = 24° 04' 25.9"	D = 2° 56' 34.0"
L = 1,160.82'	L = 91.30'	L = 110.38'	L = 128.82'	L = 77.05'
T = 598.66'	R = 1,891.00'	T = 56.02'	T = 66.03'	T = 38.53'
R = 1,925.00'	Se = 2.5%	R = 262.00'	R = 238.00'	R = 1,947.00'
Se = 6%	V = 30mph	Se = 2.5%	Se = 2.5%	Se = 2.5%
V = 50mph		V = 30mph	V = 30mph	V = 30mph

-Y- 90+00
-Y- 95+00
-YXO- PRC Sta. 12+01.68
-Y- POC Sta. 91+17.74 =
-YXO- POC Sta. 12+20.61
-YXO- PCC Sta. 13+30.50
-YXO- PT Sta. 14+07.55 =
-Y- POC Sta. 93+00.00 LT
-Y- PT Sta. 93+83.93
-YXO- PC Sta. 10+00.00 =
-Y- POC Sta. 89+00.00 RT
BEGIN CONSTRUCTION
-Y- STA 89+90.00
-YXO- PRC Sta. 10+91.30
-Y-
-YXO-
-Y- 00+00

SR 2071 WESTERN BLVD 30' BST
N 78° 53' 41.4" E
GPS SRI308-2
TIE TO EX. SIDEWALK
SIDEWALK TO REMAIN IN PLACE
SPEC. CUT DITCH SEE DETAIL 1
SPEC. CUT DITCH SEE DETAIL 2
SPEC. CUT DITCH SEE DETAIL 3
CLASS 'B' RIP-RAP EST. 2 TONS EST. 7 SYGF
100' BAY TAPER RT/LT
85' LT IEOT BAY TAPER
36' INC.
17.25' INC.
RETAIN
REMOVE
MED. 2' PS
4' PS
2' PS
2' PLASTIC
18" RCP-IV
15" RCP-IV
+98.26 -Y- 1.79' RT 8.00' R
+99.11 -Y- 98.76' RT
+24.45 -Y- 98.79' RT
+75.35 -Y- 126.80' RT 138.80' RT
+34.49 -Y- 122.18' RT 134.18' RT
+91.96 -Y- 99.00' RT
+16.91 -Y- 99.00' RT

SHERWIN ONEAL & KRISTAL M HILL
DB 2807 PG 850
PB 51PG 72

MILTON TURNER SCHAEFFER JR & ANNE SCHAEFFER
DB 4367 PG 561
PB 68 PG 131

MDI MANAGEMENT LLC
DB 4071 PG 134
PB 68 PG 191

C4 JACKSONVILLE LL.
DB 4207 PG 486
PB 68 PG 191

MILTON TURNER JR & ANNE SCHAEFFER
DB 4367 PG 561
PB 47 PG 127

RONALD T & ANGELA L TROTT DB 2868 PG 751 PB 51 PG 72
FREDERICK W III & SUSAN HARGETT DB 2867 PG 249 PB 51 PG 72
BRIAN J & LAUREN P LOCONTE DB 2998 PG 406 PB 51 PG 72
DEREK CHARLES ZEIGLER DB 3197 PG 385 PB 51 PG 72
KERRY W JR & KELLY K GUMP DB 2887 PG 133 PB 51 PG 72
MICHAEL L & DEMARICE H CARTER DB 2964 PG 390 PB 51 PG 72

JONATHAN T & APRIL L BAKER
DB 2807 PG 850
PB 48 PG 161

LAWRENCE W & ALICIA N PETTEWAY DB 456 PG 89 PB 48 PG 161
CHARLES ALLEN & KELLIE NICOLE GARRETT DB 4253 PG 954 PB 48 PG 161
ROBERT C & JULIE R CARPENTER DB 4068 PG 143 PB 48 PG 161
HALSTEAD III & TRACY L MEADOWS DB 2730 PG 604 PB 49 PG 55
JACKSONVILLE, CITY OF

NAD 83/2007

MATCHLINE SEE SHEET 4 -Y- STA 98+00.00

FOR -Y- PROFILE, SEE SHEET 9
FOR -YXO- PROFILE, SEE SHEET 10

DETAIL 1
SPECIAL CUT DITCH
(Not to Scale)
Natural Ground, 4:1, D, 6:1 or Flatter, Front Ditch Slope
Min. D = 1 Ft.
FROM STA. -Y- 93+50 TO 96+00 RT.
FROM STA. -Y- 97+25 TO 98+50 LT.

DETAIL 2
SPECIAL CUT DITCH
(Not to Scale)
Natural Ground, 4:1, D, 4:1 or Flatter, Front Ditch Slope
Min. D = 2 Ft.
FROM STA. -Y- 92+00 TO 93+50 RT.

DETAIL 3
SPECIAL CUT DITCH
(Not to Scale)
Natural Ground, 6:1, D, 6:1 or Flatter, Front Ditch Slope
Min. D = 1 Ft.
FROM STA. -Y- 90+22 TO 91+50 LT.

12-APR-2018 09:19
N:\Projects\1308_rdy_psh6.dgn
HNTB

DocuSign Envelope ID: F7730022-487C-46E5-BD05-1BFFC512166D

HNTB NORTH CAROLINA, P.C.
343 E. Six Forks Road, Suite 200
Raleigh, North Carolina 27609
NC License No: C-1554

PROJECT REFERENCE NO.	SHEET NO.
U-5319	7
R/W SHEET NO.	

ROADWAY DESIGN ENGINEER
NORTH CAROLINA PROFESSIONAL SEAL 36786 ENGINEER DOUGLAS M. HEALEY
Douglas M. Healey
A878905B4F4F4F1...
4/12/2018

HYDRAULICS ENGINEER
NORTH CAROLINA PROFESSIONAL SEAL 15764 ENGINEER JAMES A. BYRD
James A. Byrd
2359295B5F4E4A6...
4/12/2018

DOCUMENT NOT CONSIDERED FINAL UNLESS ALL SIGNATURES COMPLETED

REVISIONS 5/14/99

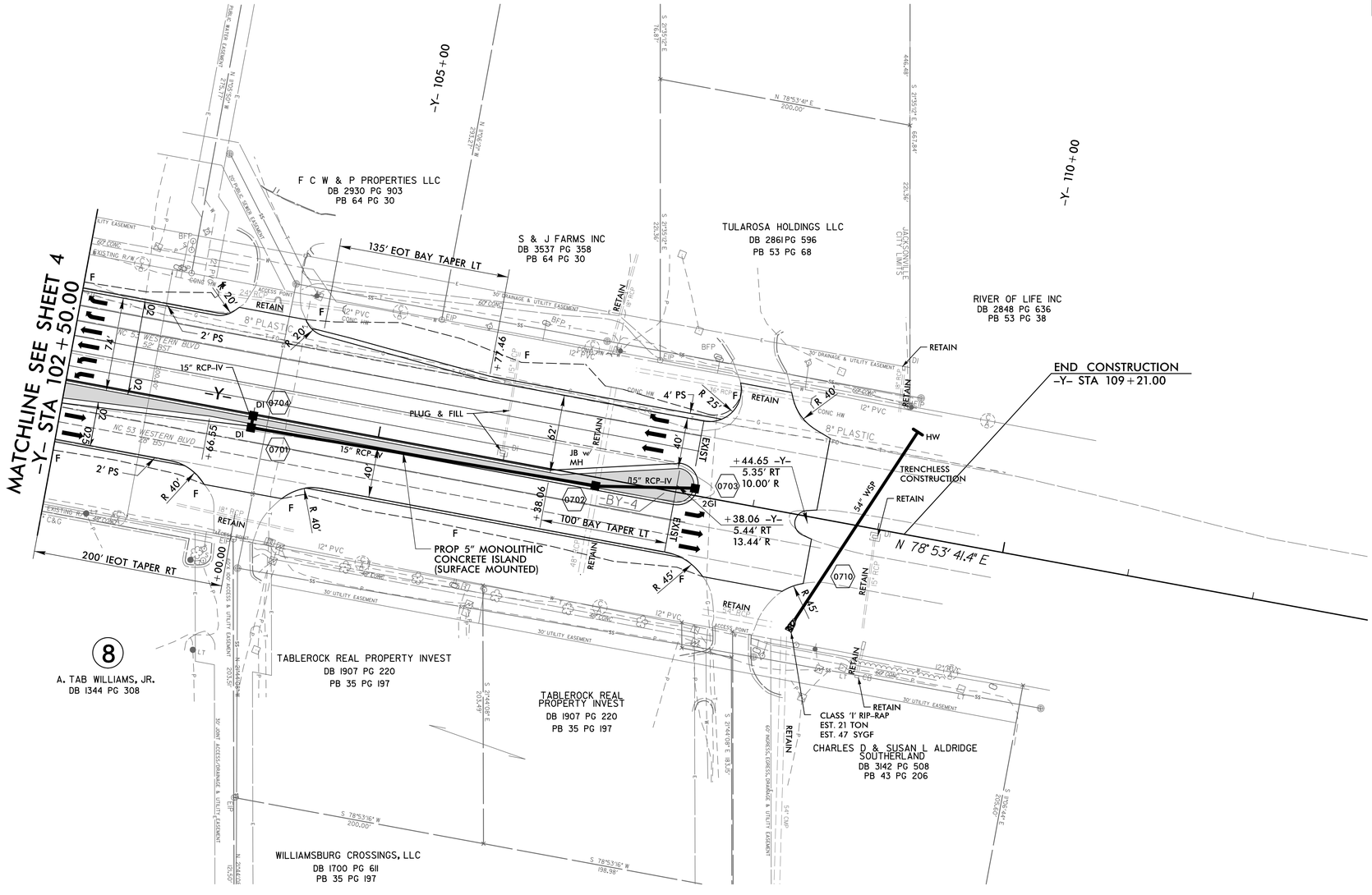

FOR -Y- PROFILE, SEE SHEET 9

12-APR-2018 09:19
H:\Roadway\Proj\sr1308_rdy_psh7.dgn
HNTB

DocuSign Envelope ID: F7730022-487C-46E5-BD05-1BFFC512166D

5/28/99

HNTB NORTH CAROLINA, P.C.
343 E. Six Forks Road, Suite 200
Raleigh, North Carolina 27609
NC License No: C-1554

PROJECT REFERENCE NO.	SHEET NO.
U-5319	8

ROADWAY DESIGN ENGINEER
NORTH CAROLINA PROFESSIONAL SEAL 36786 ENGINEER DOUGLAS M. WHEATLEY
4/12/2018

HYDRAULICS ENGINEER
NORTH CAROLINA PROFESSIONAL SEAL 15764 ENGINEER JAMES A. BYRD
4/12/2018

DOCUMENT NOT CONSIDERED FINAL UNLESS ALL SIGNATURES COMPLETED

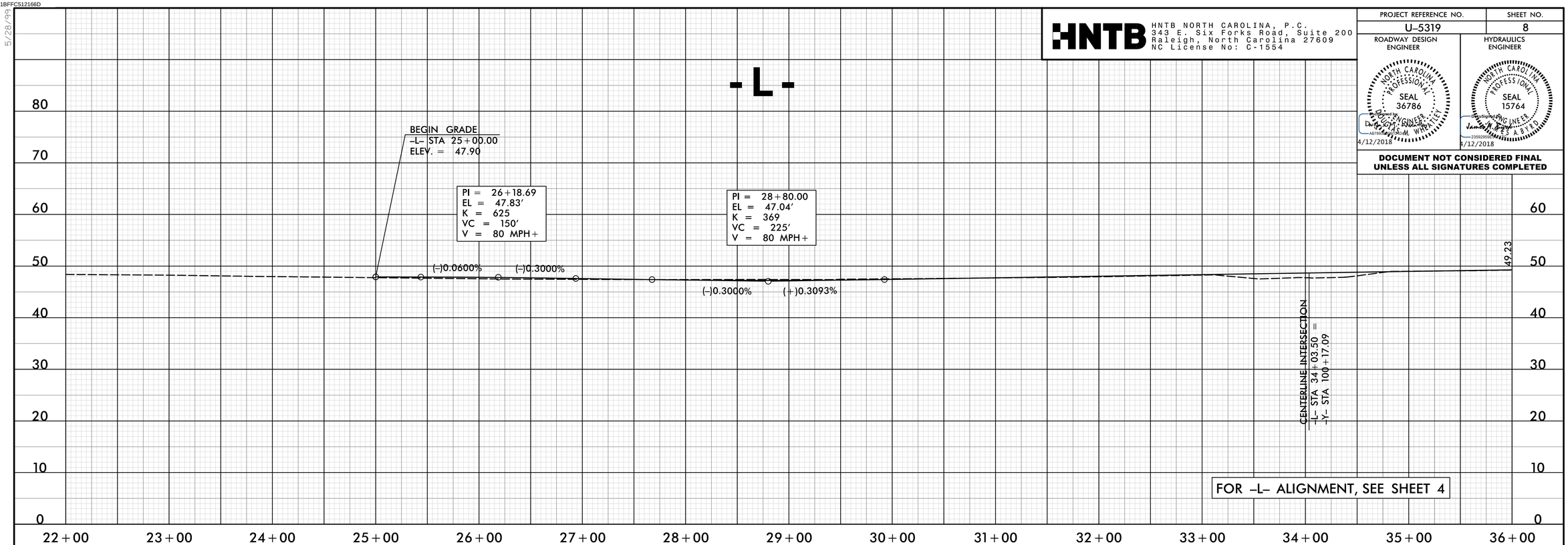

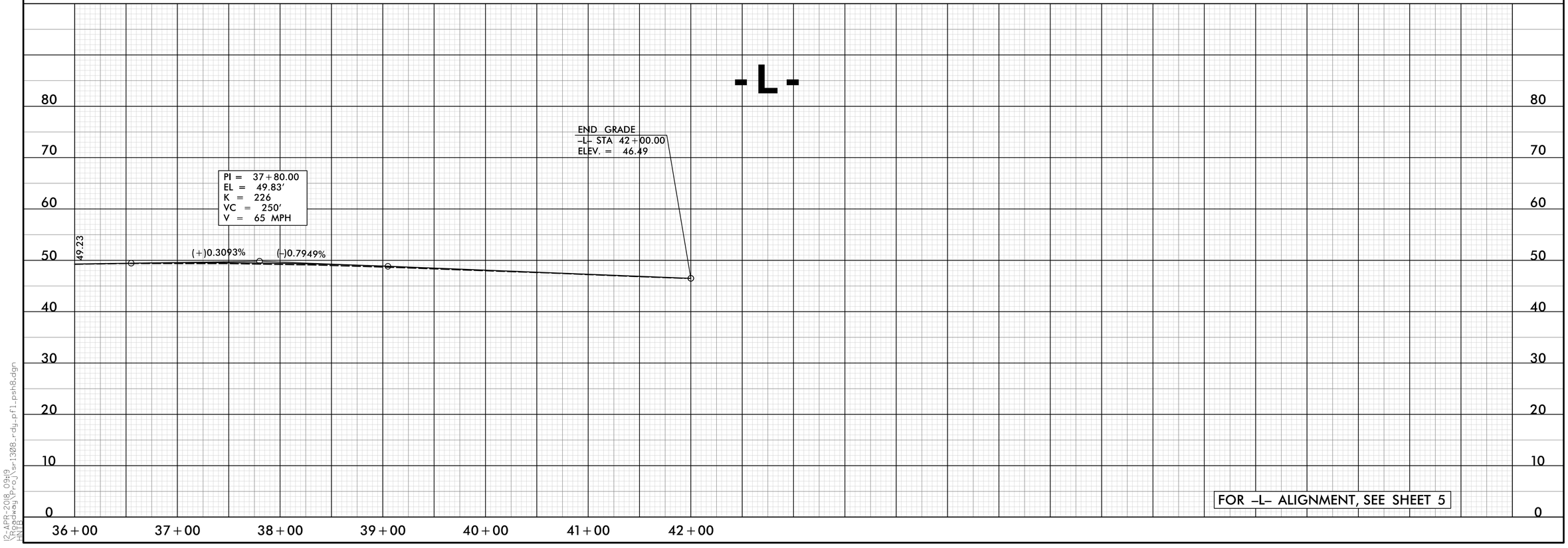

12-APR-2018 09:19
\Roadway\Proj\sr1308_rdy_pfl_psh8.dgn
HNTB

DocuSign Envelope ID: F7730022-487C-46E5-BD05-1BFFC512166D

5/28/99

HNTB NORTH CAROLINA, P.C.
343 E. Six Forks Road, Suite 200
Raleigh, North Carolina 27609
NC License No: C-1554

PROJECT REFERENCE NO.	SHEET NO.
U-5319	9

ROADWAY DESIGN ENGINEER
NORTH CAROLINA PROFESSIONAL SEAL 36786 ENGINEER DOUGLAS M. WHEATLEY
4/12/2018

HYDRAULICS ENGINEER
NORTH CAROLINA PROFESSIONAL SEAL 15764 ENGINEER JAMES A. BYRD
4/12/2018

DOCUMENT NOT CONSIDERED FINAL UNLESS ALL SIGNATURES COMPLETED

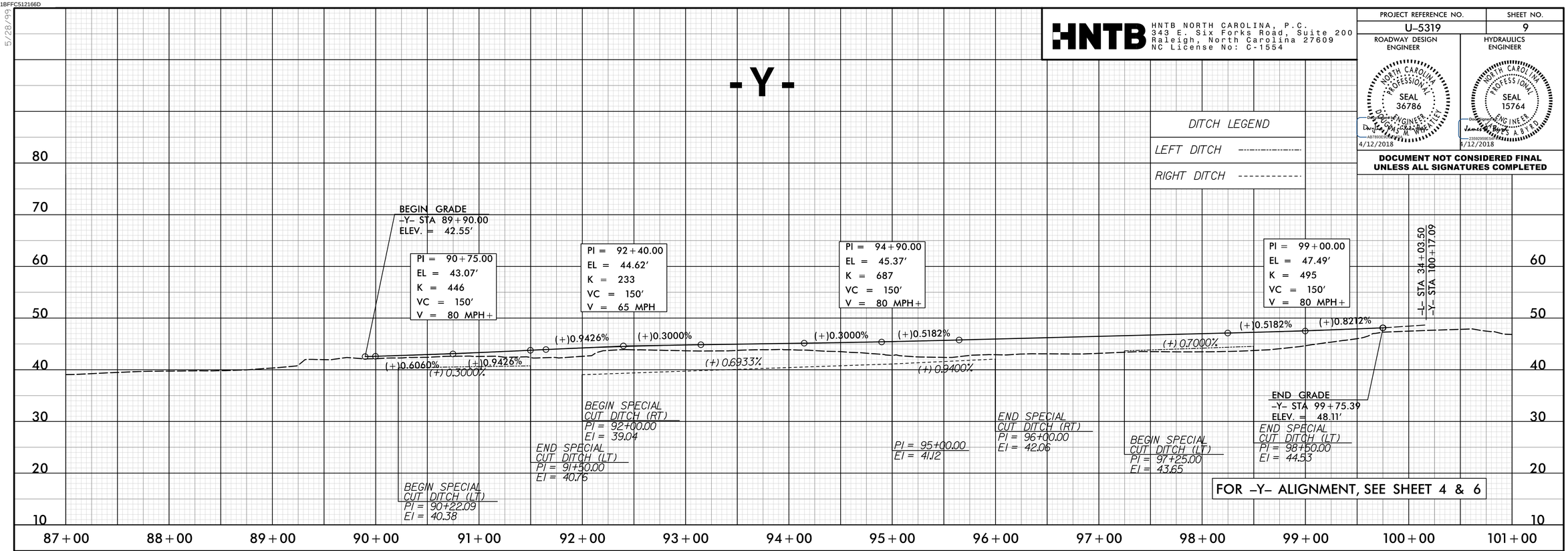

12-APR-2018 09:20
\Roadway\Proj\sr1308_rdy_pf1_psh9.dgn
HNTB

DocuSign Envelope ID: F7730022-487C-46E5-BD05-1BFFC512166D

5/28/99

HNTB NORTH CAROLINA, P.C.
343 E. Six Forks Road, Suite 200
Raleigh, North Carolina 27609
NC License No: C-1554

PROJECT REFERENCE NO.	SHEET NO.
U-5319	10

ROADWAY DESIGN ENGINEER
NORTH CAROLINA PROFESSIONAL SEAL 36786 ENGINEER DOUGLAS M. WHEATLEY
4/12/2018

HYDRAULICS ENGINEER
NORTH CAROLINA PROFESSIONAL SEAL 15764 ENGINEER JAMES A. BYRD
4/12/2018

DOCUMENT NOT CONSIDERED FINAL UNLESS ALL SIGNATURES COMPLETED

-YXO-

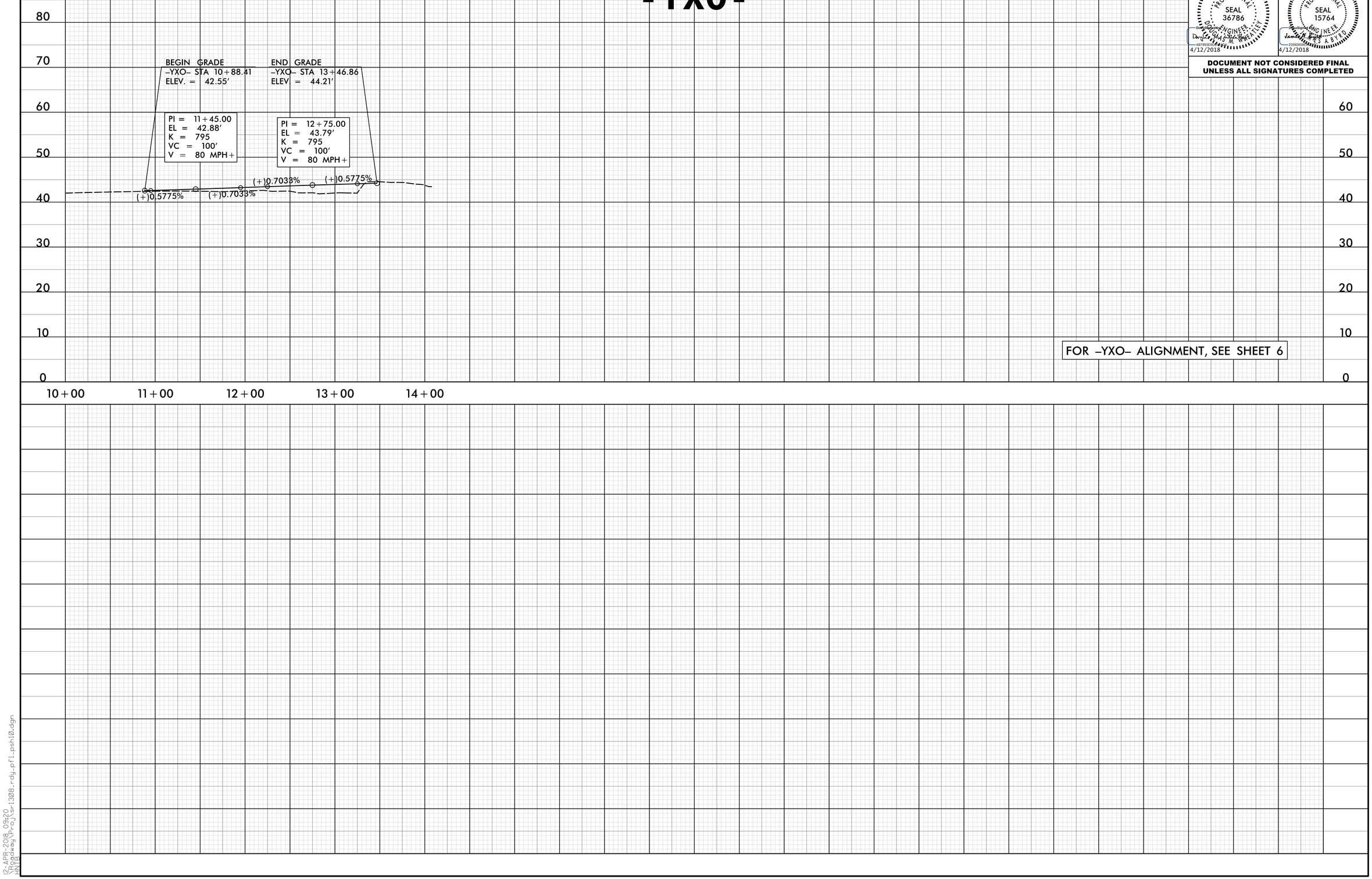

FOR -YXO- ALIGNMENT, SEE SHEET 6

12-APR-2018 09:20
\Roadway\Proj\sr1308_rdy_pfl_psh10.dgn
HNTB

DocuSign Envelope ID: AF1260FE-D4E4-4A7E-A171-CD01A3D15DF3

STATE OF NORTH CAROLINA
DIVISION OF HIGHWAYS

TRANSPORTATION MANAGEMENT PLAN

ONSLOW COUNTY

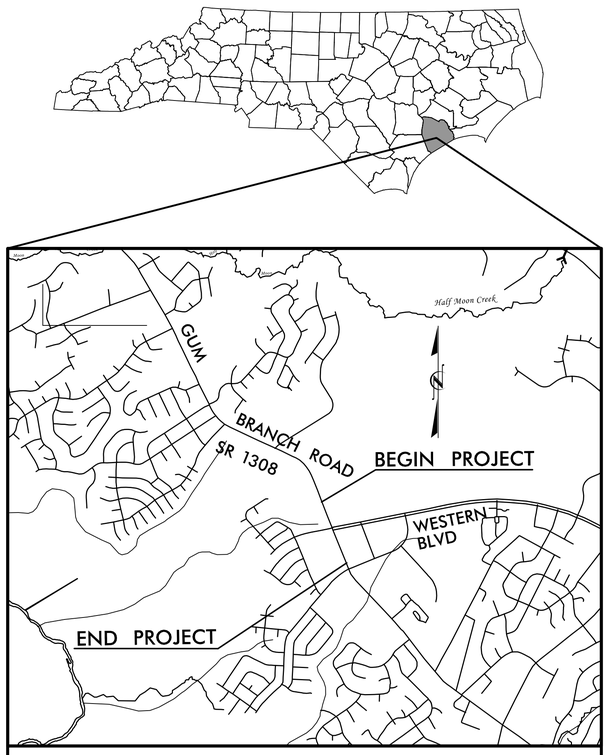

VICINITY MAP

LOCATION: *INTERSECTION OF SR 1308 (GUM BRANCH ROAD) AND NC 53 (WESTERN BOULEVARD).*

TYPE OF WORK: *GRADING, DRAINAGE, PAVING AND SIGNALS*

INDEX OF SHEETS

SHEET NO.	TITLE
TMP-1	TITLE SHEET, VICINITY MAP, AND INDEX OF SHEETS
TMP-1A	LIST OF APPLICABLE ROADWAY STANDARD DRAWINGS, LEGEND AND TEMPORARY PAVEMENT MARKING SCHEDULE
TMP-1B	TRANSPORTATION OPERATIONS PLAN: (MANAGEMENT STRATEGIES AND GENERAL NOTES)
TMP-2	PHASING
TMP-2A & TMP-2B	TYPICAL CUT SECTIONS
TMP-3	TEMPORARY TRAFFIC CONTROL PHASE I DETAIL
TMP-4 & TMP-4A	TEMPORARY TRAFFIC CONTROL PHASE II DETAIL
TMP-5	TEMPORARY TRAFFIC CONTROL PHASE III DETAIL

SHEET NO.
TMP–1

U–5319

TIP PROJECT:

H. SHYU, P.E. *TRAFFIC CONTROL PROJECT ENGINEER*
R. B. EARLY, P.E. *QUALITY CONTROL ENGINEER*
J. A. PHILLIPS *TRAFFIC CONTROL DESIGN ENGINEER*
JESSIE LEONARD, P.E. *NCDOT CONTACT*

DOCUMENT NOT CONSIDERED FINAL UNLESS ALL SIGNATURES COMPLETED

HNTB NORTH CAROLINA, P.C.
343 E. Six Forks Road, Ste 200
Raleigh, North Carolina 27609
NC License No: C-1554

APPROVED: DocuSigned by: Helen Shyu 0F15975A95E44EF...

DATE: 4/11/2018

SEAL

NORTH CAROLINA PROFESSIONAL SEAL 042517 ENGINEER HELEN SHYU

2/26/2018
...\TCP\U5319_tc_TMP-1_title.dgn
HNTB

DocuSign Envelope ID: AF1260FE-D4E4-4A7E-A171-CD01A3D15DF3

PROJ. REFERENCE NO.	SHEET NO.
U-5319	TMP-1A

ROADWAY STANDARD DRAWINGS

THE FOLLOWING ROADWAY STANDARDS AS SHOWN IN "ROADWAY STANDARD DRAWINGS" - PROJECT SERVICES UNIT - N.C. DEPARTMENT OF TRANSPORTATION - RALEIGH, N.C., DATED JANUARY 2018 ARE APPLICABLE TO THIS PROJECT AND BY REFERENCE HEREBY ARE CONSIDERED A PART OF THESE PLANS:

STD. NO.	TITLE
1101.01	WORK ZONE ADVANCE WARNING SIGNS
1101.02	TEMPORARY LANE CLOSURES
1101.04	TEMPORARY SHOULDER CLOSURES
1101.05	WORK ZONE VEHICLE ACCESSES
1101.11	TRAFFIC CONTROL DESIGN TABLES
1110.01	STATIONARY WORK ZONE SIGNS
1110.02	PORTABLE WORK ZONE SIGNS
1115.01	FLASHING ARROW BOARDS
1130.01	DRUMS
1145.01	BARRICADES
1150.01	FLAGGERS
1165.01	TRUCK MOUNTED ATTENUATOR
1180.01	SKINNY-DRUMS
1205.01	PAVEMENT MARKINGS - LINE TYPES AND OFFSETS
1205.02	PAVEMENT MARKINGS - TWO-LANE AND MULTI-LANE ROADWAYS
1205.04	PAVEMENT MARKINGS - INTERSECTIONS
1205.05	PAVEMENT MARKINGS - TURN LANES
1205.06	PAVEMENT MARKINGS - LANE DROPS
1205.07	PAVEMENT MARKINGS - PEDESTRIAN CROSSWALKS
1205.08	PAVEMENT MARKINGS - SYMBOLS AND WORD MESSAGES
1250.01	RAISED PAVEMENT MARKERS - INSTALLATION SPACING
1251.01	RAISED PAVEMENT MARKERS - PERMANENT AND TEMPORARY

LEGEND

GENERAL

- DIRECTION OF TRAFFIC FLOW
- DIRECTION OF PEDESTRIAN TRAFFIC FLOW
- EXIST. PVMT.
- NORTH ARROW
- PROPOSED PVMT.
- WORK AREA (AWAY FROM TRAFFIC)
- REMOVAL
- PROPOSED CONSTRUCTION (USING LANE CLOSURES AND/OR FLAGGERS)

SIGNALS

EXISTING PROPOSED TEMPORARY

PAVEMENT MARKINGS

EXISTING LINES
TEMPORARY LINES

TRAFFIC CONTROL DEVICES

- BARRICADE (TYPE III)
- CONE
- DRUM SKINNY DRUM
- TEMPORARY CRASH CUSHION
- FLASHING ARROW BOARD
- FLAGGER
- LAW ENFORCEMENT
- CHANGEABLE MESSAGE SIGN

TEMPORARY SIGNING

- PORTABLE SIGN
- STATIONARY SIGN

PAVEMENT MARKERS

- CRYSTAL/CRYSTAL
- CRYSTAL/RED
- YELLOW/YELLOW

PAVEMENT MARKING SYMBOLS

PAVEMENT MARKING SYMBOLS

TEMPORARY PAVEMENT MARKING

SYMBOL	DESCRIPTION
	PAVEMENT MARKING LINES
	4" WHITE PAINT
P2	WHITE STOPBAR
P13	WHITE WIDE MINISKIP
PA	WHITE EDGELINE
PB	YELLOW EDGELINE
PD	3 FT/ 9 FT WHITE MINISKIP
PE	WHITE LANE LINE
PC	WHITE SKIP LINE
PI	YELLOW DOUBLE CENTER LINE
	PAVEMENT MARKING SYMBOLS & CHARACTERS
QA	LEFT TURN ARROW
QB	RIGHT TURN ARROW
QC	STRAIGHT ARROW

NOTE: FOR EACH PAINT PAVEMENT MARKING ITEM, REFER TO GENERAL NOTES FOR NUMBER OF APPLICATIONS.

	PAVEMENT MARKERS
	TEMPORARY RAISED
MI	CRYSTAL & RED
MH	YELLOW & YELLOW

HNTB NORTH CAROLINA, P.C.
343 E. Six Forks Road, Suite 200
Raleigh, North Carolina 27609
NC License No: C-1554

APPROVED: DocuSigned by: Helen Shyu 0F15975A95E44EF...
DATE: 4/11/2018
SEAL

NORTH CAROLINA PROFESSIONAL SEAL 042517 ENGINEER HELEN SHYU

DOCUMENT NOT CONSIDERED FINAL UNLESS ALL SIGNATURES COMPLETED

STATE OF NORTH CAROLINA · DEPARTMENT OF TRANSPORTATION ·

TRANSPORTATION MANAGEMENT PLAN

ROADWAY STANDARD DRAWINGS, LEGEND & TEMPORARY PAVEMENT MARKING SCHEDULE

2/26/2018
...\U5319_tc_TMP-1A_rsd-legend.dgn
HNTB

DocuSign Envelope ID: AF1260FE-D4E4-4A7E-A171-CD01A3D15DF3

PROJ. REFERENCE NO.	SHEET NO.
U-5319	TMP-1B

MANAGEMENT STRATEGIES

MAINTENANCE OF TRAFFIC FOR THIS PROJECT HAS BEEN DIVIDED INTO THREE PHASES: CONSTRUCT AWAY FROM TRAFFIC, WIDEN AND/OR WEDGE, CLOSE INSIDE LANES AND CONSTRUCT CONCRETE MEDIAN ISLANDS. ALL WORK SHALL TAKE PLACE DURING NIGHTLY LANE CLOSURE RESTRICTIONS.

DURING PHASE I, USING NIGHTTIME LANE CLOSURES & NARROW LANES AS NEEDED, CONSTRUCT PROPOSED -YXO- AND SHIFT TRAFFIC TO TEMPORARY PATTERN.

DURING PHASE II, WIDEN AND/OR WEDGE ROADWAY USING NIGHTLY LANE CLOSURES. PLACE TRAFFIC IN EXISTING PATTERN BY THE END OF EACH WORK PERIOD UNTIL ALL PROPOSED WIDENING AND WEDGING ARE COMPLETE.

DURING PHASE III, SHIFT TRAFFIC TO OUTSIDE LANES IN A USING NIGHTLY LANE CLOSURES TO CONSTRUCT CONCRETE MEDIAN ISLANDS. OPEN ALL LANES TO TRAFFIC BY THE END OF EACH WORK PERIOD.

GENERAL NOTES

CHANGES MAY BE REQUIRED WHEN PHYSICAL DIMENSIONS IN THE DETAIL DRAWINGS, STANDARD DETAILS, AND ROADWAY DETAILS ARE NOT ATTAINABLE TO MEET FIELD CONDITIONS OR RESULT IN DUPLICATE OR UNDESIRED OVERLAPPING OF DEVICES. MODIFICATION MAY INCLUDE: MOVING, SUPPLEMENTING, COVERING, OR REMOVAL OF DEVICES AS DIRECTED BY THE ENGINEER.

THE FOLLOWING GENERAL NOTES APPLY AT ALL TIMES FOR THE DURATION OF THE CONSTRUCTION PROJECT EXCEPT WHEN OTHERWISE NOTED IN THE PLAN OR DIRECTED BY THE ENGINEER.

TIME RESTRICTIONS

A) DO NOT CLOSE OR NARROW TRAVEL LANES AS FOLLOWS:

ROAD NAME	DAY AND TIME RESTRICTIONS
ANY ROAD	MONDAY THRU SUNDAY 5:00 AM TO 8:00 PM

B) DO NOT CLOSE OR NARROW TRAVEL LANES DURING HOLIDAYS AND SPECIAL EVENTS AS FOLLOWS:

ROAD NAME

ANY ROAD

HOLIDAY

1. FOR ANY UNEXPECTED OCCURRENCE THAT CREATES UNUSUALLY HIGH TRAFFIC VOLUMES, AS DIRECTED BY THE ENGINEER.
2. FOR NEW YEAR'S, BETWEEN THE HOURS OF 5:00 A.M. DECEMBER 31st TO 8:00 P.M. JANUARY 2ND. IF NEW YEAR'S DAY IS ON A FRIDAY, SATURDAY, SUNDAY, OR MONDAY THEN UNTIL 8:00 P.M. THE FOLLOWING TUESDAY.
3. FOR EASTER, BETWEEN THE HOURS OF 5:00 A.M. THURSDAY AND 8:00 P.M. MONDAY.
4. FOR MEMORIAL DAY, BETWEEN THE HOURS OF 5:00 A.M. FRIDAY TO 8:00 P.M. TUESDAY.
5. FOR INDEPENDENCE DAY, BETWEEN THE HOURS OF 5:00 A.M. THE DAY BEFORE INDEPENDENCE DAY AND 8:00 P.M. THE DAY AFTER INDEPENDENCE DAY.

   IF INDEPENDENCE DAY IS ON A FRIDAY, SATURDAY, SUNDAY OR MONDAY THEN BETWEEN THE HOURS OF 5:00 A.M. THE THURSDAY BEFORE INDEPENDENCE DAY AND 8:00 P.M. THE TUESDAY AFTER INDEPENDENCE DAY.
6. FOR LABOR DAY, BETWEEN THE HOURS OF 5:00 A.M. FRIDAY AND 8:00 P.M. TUESDAY.
7. FOR THANKSGIVING DAY, BETWEEN THE HOURS OF 5:00 A.M. TUESDAY TO 8:00 P.M. MONDAY.
8. FOR CHRISTMAS, BETWEEN THE HOURS OF 5:00 A.M. THE FRIDAY BEFORE THE WEEK OF CHRISTMAS DAY AND 8:00 P.M. THE FOLLOWING TUESDAY AFTER THE WEEK OF CHRISTMAS.
9. FOR THE EVENTS LISTED BELOW, BETWEEN THREE (3) HOURS BEFORE THE START, AND THREE (3) HOURS AFTER THE END OF EACH EVENT:
   - RUN FOR THE WARRIORS
   - KRISPY KREME KRAZE 6K
   - ANNUAL CHRISTMAS HOLIDAY PARADE
   - JACKSONVILLE VETERANS DAY PARADE

C) DO NOT CONDUCT ANY HAULING OPERATIONS AGAINST THE FLOW OF TRAFFIC OF AN OPEN TRAVELWAY UNLESS THE HAULING OPERATION IS PROTECTED BY BARRIER OR GUARDRAIL OR AS DIRECTED BY THE ENGINEER.

LANE AND SHOULDER CLOSURE REQUIREMENTS

D) REMOVE LANE CLOSURE DEVICES FROM THE LANE WHEN WORK IS NOT BEING PERFORMED BEHIND THE LANE CLOSURE OR WHEN A LANE CLOSURE IS NO LONGER NEEDED OR AS DIRECTED BY THE ENGINEER.

E) WHEN PERSONNEL AND/OR EQUIPMENT ARE WORKING WITHIN 15 FT OF AN OPEN TRAVEL LANE, CLOSE THE NEAREST OPEN SHOULDER USING ROADWAY STANDARD DRAWING NO. 1101.04 UNLESS THE WORK AREA IS PROTECTED BY BARRIER OR GUARDRAIL OR A LANE CLOSURE IS INSTALLED.

F) WHEN PERSONNEL AND/OR EQUIPMENT ARE WORKING ON THE SHOULDER ADJACENT TO AN UNDIVIDED FACILITY AND WITHIN 5 FT OF AN OPEN TRAVEL LANE, CLOSE THE NEAREST OPEN TRAVEL LANE USING ROADWAY STANDARD DRAWING NO. 1101.02 UNLESS THE WORK AREA IS PROTECTED BY BARRIER OR GUARDRAIL.

WHEN PERSONNEL AND/OR EQUIPMENT ARE WORKING ON THE SHOULDER ADJACENT TO A DIVIDED FACILITY AND WITHIN 10 FT OF AN OPEN TRAVEL LANE, CLOSE THE NEAREST OPEN TRAVEL LANE USING ROADWAY STANDARD DRAWING NO. 1101.02 UNLESS THE WORK AREA IS PROTECTED BY BARRIER OR GUARDRAIL.

G) WHEN PERSONNEL AND/OR EQUIPMENT ARE WORKING WITHIN A LANE OF TRAVEL OF AN UNDIVIDED OR DIVIDED FACILITY, CLOSE THE LANE ACCORDING TO THE TRAFFIC CONTROL PLANS, ROADWAY STANDARD DRAWINGS, OR AS DIRECTED BY THE ENGINEER. CONDUCT THE WORK SO THAT ALL PERSONNEL AND/OR EQUIPMENT REMAIN WITHIN THE CLOSED TRAVEL LANE.

H) DO NOT INSTALL MORE THAN ONE (1) LANE CLOSURE IN ANY ONE DIRECTION ON SR 1308 (GUM BRANCH RD).

PAVEMENT EDGE DROP OFF REQUIREMENTS

I) BACKFILL AT A 6:1 SLOPE UP TO THE EDGE AND ELEVATION OF EXISTING PAVEMENT IN AREAS ADJACENT TO AN OPENED TRAVEL LANE THAT HAS AN EDGE OF PAVEMENT DROP-OFF AS FOLLOWS:

BACKFILL DROP-OFFS THAT EXCEED 2 INCHES ON ROADWAYS WITH POSTED SPEED LIMITS OF 45 MPH OR GREATER.

BACKFILL DROP-OFFS THAT EXCEED 3 INCHES ON ROADWAYS WITH POSTED SPEED LIMITS LESS THAN 45 MPH.

BACKFILL WITH SUITABLE COMPACTED MATERIAL, AS APPROVED BY THE ENGINEER, AT NO EXPENSE TO THE DEPARTMENT.

J) DO NOT EXCEED A DIFFERENCE OF 2 INCHES IN ELEVATION BETWEEN OPEN LANES OF TRAFFIC FOR NOMINAL LIFTS OF 1.5 INCHES. INSTALL ADVANCE WARNING "UNEVEN LANES" SIGNS (W8-11) 350' IN ADVANCE AND A MINIMUM OF EVERY HALF MILE THROUGHOUT THE UNEVEN AREA.

TRAFFIC PATTERN ALTERATIONS

K) NOTIFY THE ENGINEER THIRTY (30) CALENDAR DAYS PRIOR TO ANY TRAFFIC PATTERN ALTERATION.

SIGNING

L) INSTALL ADVANCE WORK ZONE WARNING SIGNS WHEN WORK IS WITHIN 40 FT FROM THE EDGE OF TRAVEL LANE AND NO MORE THAN THREE (3) DAYS PRIOR TO THE BEGINNING OF CONSTRUCTION.

M) ENSURE ALL NECESSARY SIGNING IS IN PLACE PRIOR TO ALTERING ANY TRAFFIC PATTERN.

TRAFFIC CONTROL DEVICES

N) WHEN LANE CLOSURES ARE NOT IN EFFECT SPACE CHANNELIZING DEVICES IN WORK AREAS NO GREATER IN FEET THAN TWICE THE POSTED SPEED LIMIT (MPH) EXCEPT, 10 FT ON-CENTER IN RADII, AND 3 FT OFF THE EDGE OF AN OPEN TRAVELWAY. REFER TO STANDARD SPECIFICATIONS FOR ROADS AND STRUCTURES SECTIONS 1130 (DRUMS), 1135 (CONES) AND 1180 (SKINNY DRUMS) FOR ADDITIONAL REQUIREMENTS.

O) PLACE ADDITIONAL SETS OF THREE CHANNELIZING DEVICES PERPENDICULAR TO THE EDGE OF TRAVELWAY ON 500 FT CENTERS WHEN UNOPENED LANES ARE CLOSED TO TRAFFIC.

PAVEMENT MARKINGS AND MARKERS

P) INSTALL TEMPORARY PAVEMENT MARKINGS AND TEMPORARY PAVEMENT MARKERS ON INTERIM LAYERS OF PAVEMENT AS FOLLOWS:

ROAD NAME	MARKING	MARKER
ANY ROAD	PAINT	TEMPORARY RAISED

Q) PLACE ONE APPLICATION OF PAINT FOR TEMPORARY TRAFFIC PATTERNS. PLACE A SECOND APPLICATION OF PAINT SIX (6) MONTHS AFTER THE INITIAL APPLICATION AND EVERY SIX MONTHS AS DIRECTED BY THE ENGINEER.

R) TIE PROPOSED PAVEMENT MARKING LINES TO EXISTING PAVEMENT MARKING LINES.

S) REMOVE/REPLACE ANY CONFLICTING/DAMAGED PAVEMENT MARKINGS AND MARKERS BY THE END OF EACH DAY'S OPERATION.

T) TRACE THE PROPOSED MONOLITHIC ISLAND LOCATIONS WITH PROPER COLOR PAVEMENT MARKINGS PRIOR TO INSTALLATION. PLACE DRUMS TO DELINEATE ANY PROPOSED MONOLITHIC ISLANDS BEFORE INSTALLATION.

MISCELLANEOUS

U) LAW ENFORCEMENT MAY BE USED TO MAINTAIN TRAFFIC THROUGH THE WORK AREA AND/OR INTERSECTIONS AS DIRECTED BY THE ENGINEER.

APPROVED: DocuSigned by: Helen Shyu DF15975A95E44EF...

DATE: 4/11/2018

SEAL

NORTH CAROLINA PROFESSIONAL SEAL 042517 ENGINEER HELEN SHYU

DOCUMENT NOT CONSIDERED FINAL UNLESS ALL SIGNATURES COMPLETED

STATE OF NORTH CAROLINA · DEPARTMENT OF TRANSPORTATION

TRANSPORTATION MANAGEMENT PLAN

TRANSPORTATION OPERATIONS PLAN

HNTB NORTH CAROLINA, P.C.
343 E. Six Forks Road, Suite 200
Raleigh, North Carolina 27609
NC License No: C-1554

2/26/2018
...\U5319_tc_TMP-1B_top-notes.dgn
HNTB

DocuSign Envelope ID: AF1260FE-D4E4-4A7E-A171-CD01A3D15DF3

PROJ. REFERENCE NO.	SHEET NO.
U-5319	TMP-2

PHASING

REPLACE MARKINGS AND RETURN TO THE CURRENT TRAFFIC PATTERN AT THE END OF EACH WORK PERIOD UNLESS OTHERWISE NOTED IN THE PHASING OR DIRECTED BY THE ENGINEER.

MAINTAIN VEHICULAR ACCESS TO ALL RESIDENCES AND BUSINESSES DURING THE LIFE OF THE CONTRACT UNLESS OTHERWISE NOTED IN THE PHASING OR DIRECTED BY THE ENGINEER.

PAVE PROPOSED CONSTRUCTION UP TO BUT NOT INCLUDING THE FINAL LAYER OF SURFACE COURSE, IN ALL PHASES UNTIL STATED TO INSTALL FINAL LAYER IN THE PHASING.

THE TERM "RSD" REFERS TO ROADWAY STANDARD DRAWINGS.

PHASE I

(TMP-3)

STEP 1:
USING RSD 1101.01 (SHEET 2 OF 3), INSTALL ADVANCE WARNING SIGNS ON -L- (GUM BRANCH ROAD) AND -Y- (WESTERN BLVD).
STEP 2:
USING NARROW LANES AND RSD 1101.02 (SHEET 1 OF 14) AS NEEDED, CONSTRUCT PROPOSED -YXO- FROM STA 11+07+/- TO -Y- STA 96+17+/- AND PROPOSED BULB OUT (INCLUDING PROPOSED SIDEWALK AT BULB OUT, OUTFALL AND CROSSPIPE), UP TO THE EDGE AND ELEVATION OF EXISTING.

STEP 3:
USING RSD 1101.02 (SHEET 1 OF 14) AS NEEDED, PLACE TEMPORARY PAVEMENT MARKINGS AND TEMPORARY PAVEMENT MARKERS AS SHOWN IN PHASE II, AND SHIFT WB TRAFFIC TO PROPOSED PATTERN. (SEE SHEET TMP-4)

PHASE II

(TMP-4 AND TMP-4A)

STEP 1:
USING RSD 1101.02 (SHEETS 1, 2, 3 & 7 OF 14), PERFORM THE FOLLOWING IN A CONTINUOUS MANNER:

- MILL -L- (GUM BRANCH RD) FROM -L- STA 28+00+/- TO STA 30+00+/- AND FROM -L- STA 34+50+/- TO STA 36+00+/-.

- WIDEN AND/OR WEDGE (AND INSTALL DRAINAGE) ALONG -L- (GUM BRANCH RD) FROM -L- STA 25+00+/- TO STA 42+00+/- AND -Y- (WESTERN BLVD) FROM -Y- STA 89+90+/- TO STA 109+50+/- UP TO BUT NOT INCLUDING THE FINAL LAYER OF SURFACE COURSE. CONSTRUCT REMAINING SIDEWALKS.

NOTE: BUILD MEDIAN DRAINAGE STRUCTURES 433, 440, 441, 442, 443, 446, 504, 701, 702, 703 AND 704 TO TEMPORARY ELEVATION AND COVER WITH STEEL PLATES.

NOTE: MAINTAIN ORIGINAL TRAFFIC PATTERN AT THE END OF EACH WORK PERIOD UNTIL ALL OF PHASE II WORK IS COMPLETE.

STEP 2:
USING RSD 1101.02, (SHEETS 1, 2, 3 AND 7 OF 14), PLACE FINAL LAYER OF SURFACE COURSE AND TEMPORARY PAVEMENT MARKINGS AND TEMPORARY PAVEMENT MARKERS IN THE FINAL PATTERN AND SHIFT TRAFFIC TO FINAL TRAFFIC PATTERN. (SEE PHASE III AND FINAL PAVEMENT MARKING PLANS.)

NOTE: UTILIZE SKINNY DRUMS TO DESIGNATE PROPOSED ISLANDS UNTIL ARE CONSTRUCTED.

PHASE III

(TMP-5)

STEP 1:
USING RSD 1101.02 (SHEET 3 OF 14), CLOSE THE INSIDE TRAVEL LANE IN BOTH DIRECTIONS, CONSTRUCT CONCRETE MONOLITHIC ISLANDS ALONG -L- (GUM BRANCH RD) AND -Y- (WESTERN BLVD) AND COMPLETE CONCRETE MEDIAN DRAINAGE INSTALLATION.

NOTE: PLACE SKINNY DRUMS ALONG OUTSIDE EDGE OF CONCRETE ISLANDS AT THE END OF EACH WORK PERIOD, WHEN LANE CLOSURES ARE NO LONGER IN EFFECT.

STEP: 2:
COMPLETE ALL REMAINING WORK.

PLACE FINAL PAVEMENT MARKINGS AND FINAL PAVEMENT MARKERS.

STEP 3:
REMOVE ALL TRAFFIC CONTROL DEVICES.

HNTB NORTH CAROLINA, P.C.
343 E. Six Forks Road, Suite 200
Raleigh, North Carolina 27609
NC License No: C-1554

APPROVED: DocuSigned by: Helen Shyu 0F15975A95E44EF...

DATE: 4/11/2018

SEAL

NORTH CAROLINA PROFESSIONAL SEAL 042517 ENGINEER HELEN SHYU

DOCUMENT NOT CONSIDERED FINAL UNLESS ALL SIGNATURES COMPLETED

STATE OF NORTH CAROLINA · DEPARTMENT OF TRANSPORTATION ·

TRANSPORTATION MANAGEMENT PLAN

PHASING

2/26/2018
...\TCP\U5319_tc_TMP-2_phasing.dgn
HNTB

DocuSign Envelope ID: AF1260FE-D4E4-4A7E-A171-CD01A3D15DF3

PROJ. REFERENCE NO.	SHEET NO.
U-5319	TMP-2A

PHASE I

A-A′

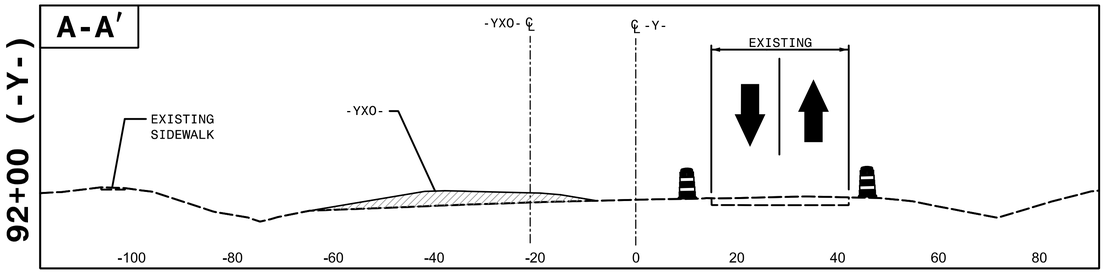

B-B′

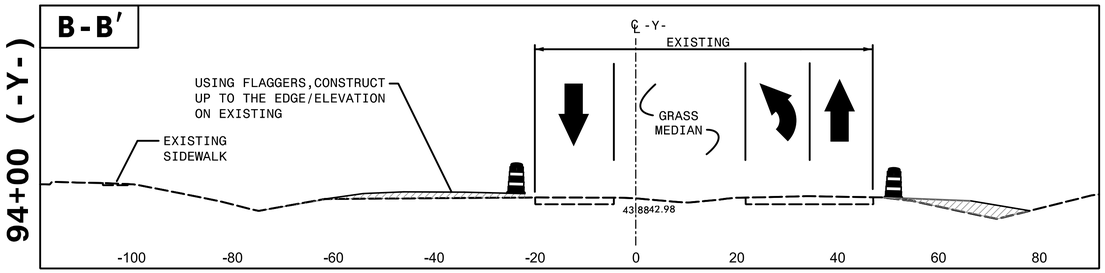

E-E′

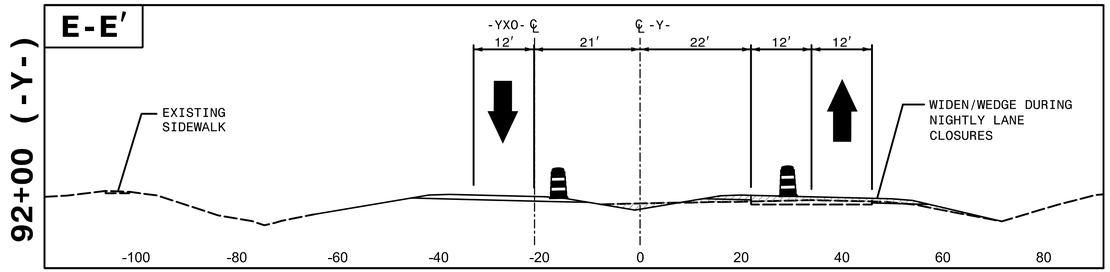

F-F′

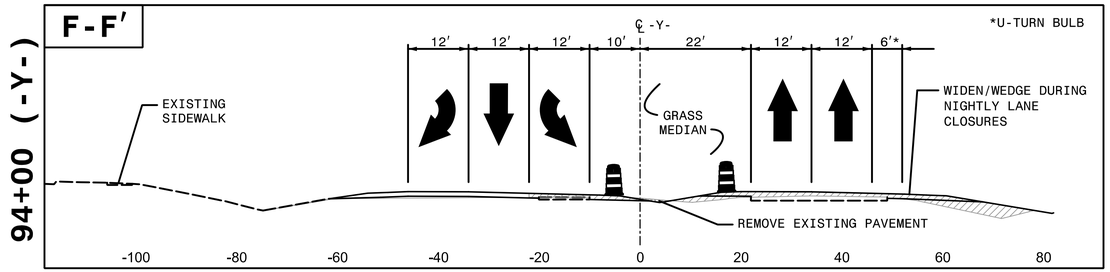

G-G′

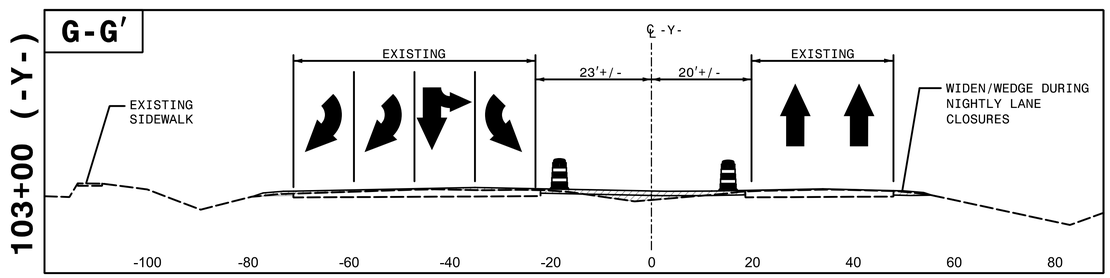

PHASE II

C-C′

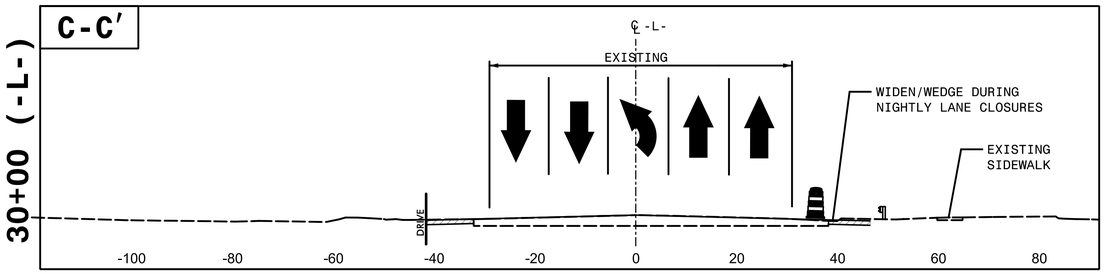

D-D′

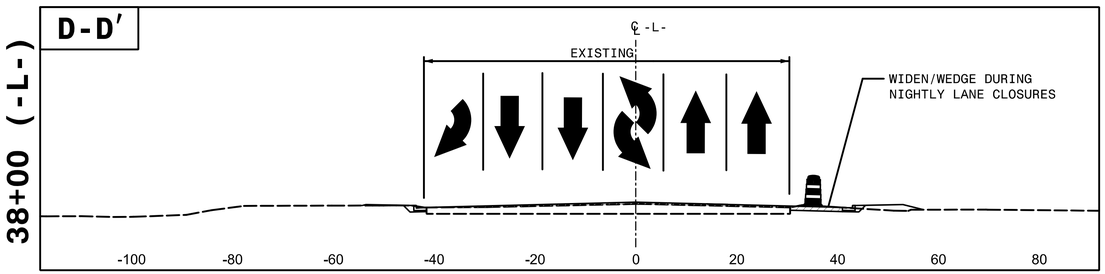

ALL WORK SHALL BE DONE AWAY FROM TRAFFIC AND/OR DURING NIGHTLY LANE CLOSURES.

APPROVED: DocuSigned by: Helen Shyu 0F15975A95E44EF...

DATE: 4/11/2018

SEAL

NORTH CAROLINA PROFESSIONAL ENGINEER SEAL 042517 HELEN SHYU

DOCUMENT NOT CONSIDERED FINAL UNLESS ALL SIGNATURES COMPLETED

STATE OF NORTH CAROLINA · DEPARTMENT OF TRANSPORTATION

TRANSPORTATION MANAGEMENT PLAN

PHASE I & II CUT SECTIONS

HNTB NORTH CAROLINA, P.C.
343 E. Six Forks Road, Suite 200
Raleigh, North Carolina 27609
NC License No: C-1554

2/26/2018
J:\CP\U5319_tc_TMP-2A_cuts.dgn
HNTB

DocuSign Envelope ID: AF1260FE-D4E4-4A7E-A171-CD01A3D15DF3

PROJ. REFERENCE NO.	SHEET NO.
U-5319	TMP-2B

PHASE III

H-H′

30+00 (-L-)

*LOCATION OF SKINNY DRUMS DURING DAYTIME HOURS. INSIDE LANES RE-OPENED.

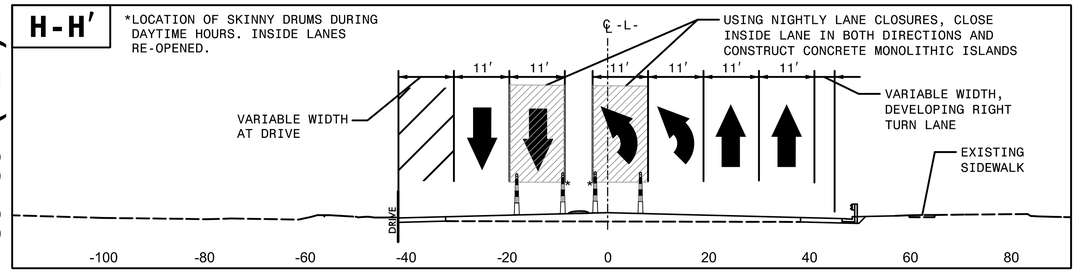

I-I′

38+00 (-L-)

*LOCATION OF SKINNY DRUMS DURING DAYTIME HOURS. INSIDE LANES RE-OPENED.

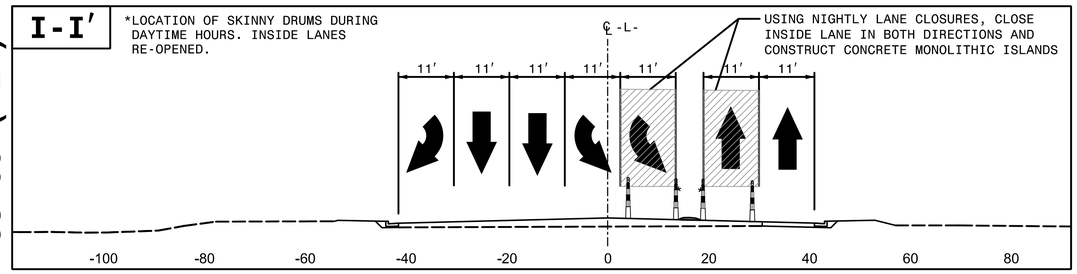

J-J′

93+00 (-Y-)

*LOCATION OF SKINNY DRUMS DURING DAYTIME HOURS. INSIDE LANES RE-OPENED.

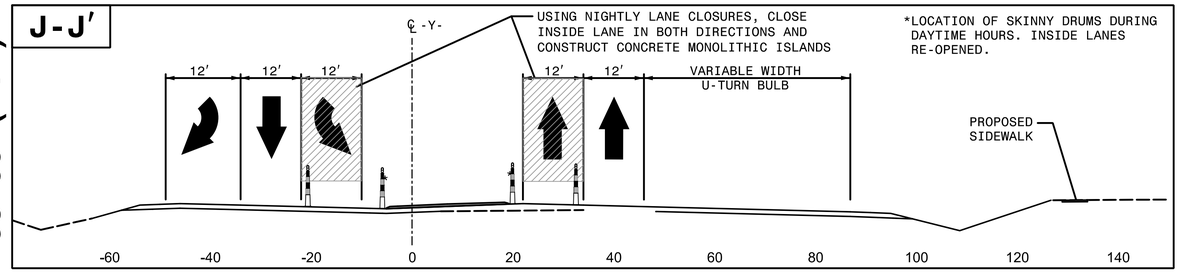

K-K′

103+00 (-Y-)

*LOCATION OF SKINNY DRUMS DURING DAYTIME HOURS. INSIDE LANES RE-OPENED.

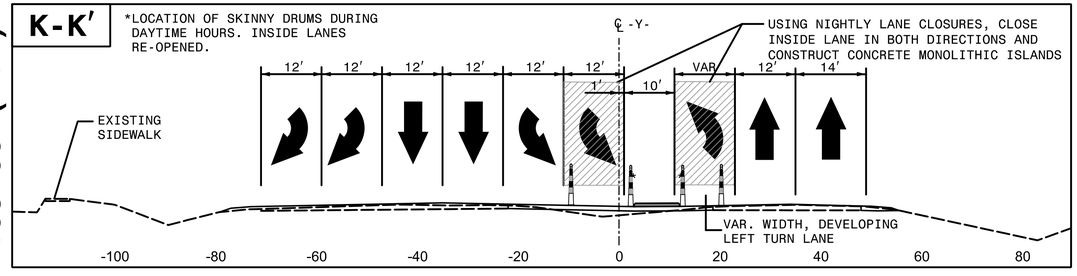

CUT SECTIONS REFLECT TRAFFIC PATTERNS DURING NIGHTLY LANE CLOSURES.

ALL WORK SHALL BE DONE AWAY FROM TRAFFIC AND/OR DURING NIGHTLY LANE CLOSURES.

APPROVED: DocuSigned by: Helen Shyu 0F15975A95E44CF

DATE: 4/11/2018

SEAL

NORTH CAROLINA PROFESSIONAL SEAL 042517 ENGINEER HELEN SHYU

DOCUMENT NOT CONSIDERED FINAL UNLESS ALL SIGNATURES COMPLETED

STATE OF NORTH CAROLINA · DEPARTMENT OF TRANSPORTATION ·

TRANSPORTATION MANAGEMENT PLAN

PHASE III CUT SECTIONS

HNTB NORTH CAROLINA, P.C.
343 E. Six Forks Road, Suite 200
Raleigh, North Carolina 27609
NC License No: C-1554

2/26/2018
C:\PCS\U5319_tc_TMP-2A_cuts.dgn
HNTB

DocuSign Envelope ID: AF1260FE-D4E4-4A7E-A171-CD01A3D15DF3

PROJ. REFERENCE NO.	SHEET NO.
U-5319	TMP-3

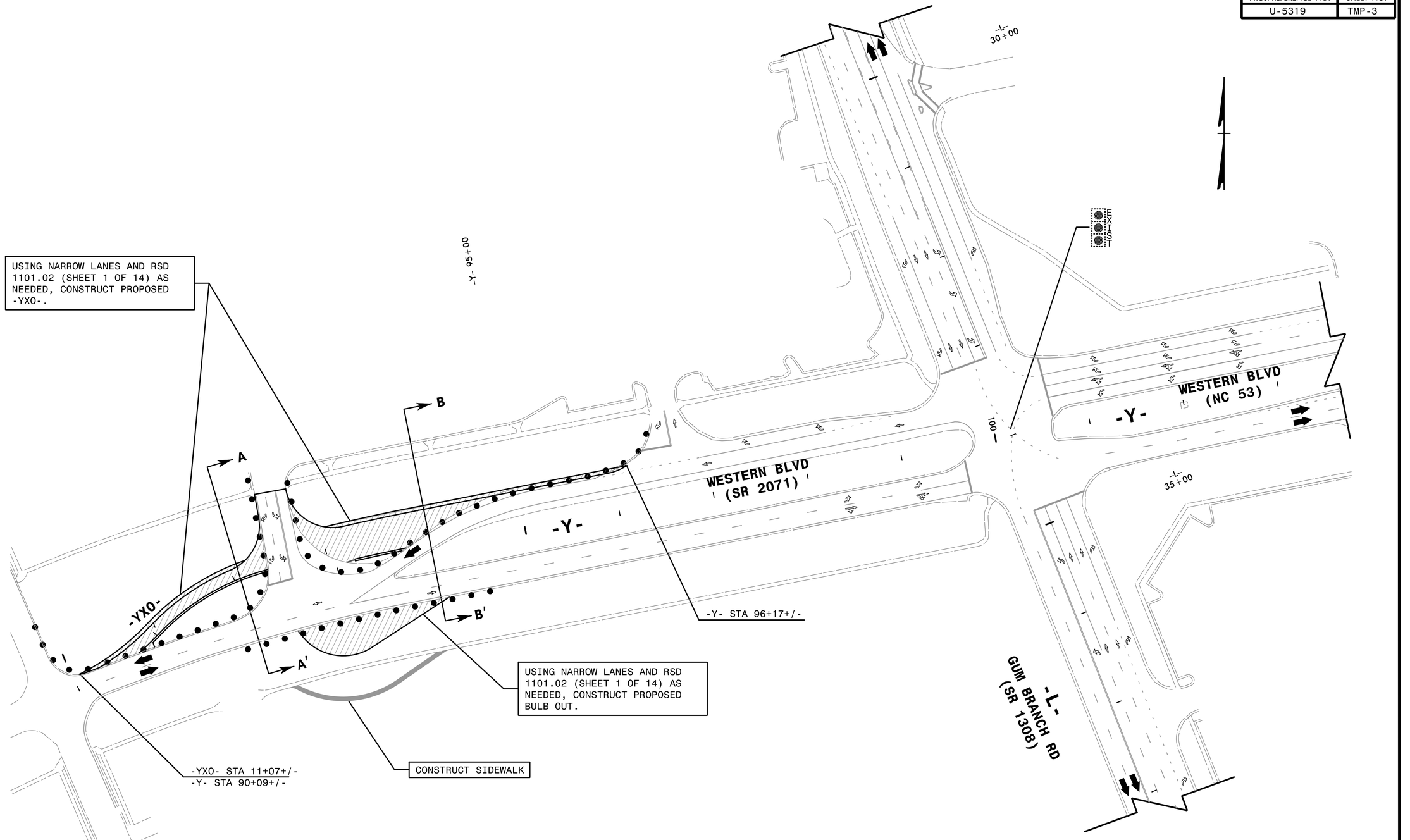

REFER TO SHEETS TMP-2A FOR CUT SECTION(S).

REMOVE CONFLICTING PAVEMENT MARKING.

2/26/2018
X:\CAD\U5319_tc_TMP-3_Pldl.dgn
HNTB

HNTB NORTH CAROLINA, P.C.
343 E. Six Forks Road, Suite 200
Raleigh, North Carolina 27609
NC License No: C-1554

APPROVED: Docusigned by: Helen Shyu 0F15975A95E44EF...

DATE: 4/11/2018

SEAL

NORTH CAROLINA PROFESSIONAL SEAL 042517 ENGINEER HELEN SHYU

DOCUMENT NOT CONSIDERED FINAL UNLESS ALL SIGNATURES COMPLETED

STATE OF NORTH CAROLINA • DEPARTMENT OF TRANSPORTATION •

TRANSPORTATION MANAGEMENT PLAN

PHASE I DETAIL

DocuSign Envelope ID: AF1260FE-D4E4-4A7E-A171-CD01A3D15DF3

PROJ. REFERENCE NO.	SHEET NO.
U-5319	TMP-4

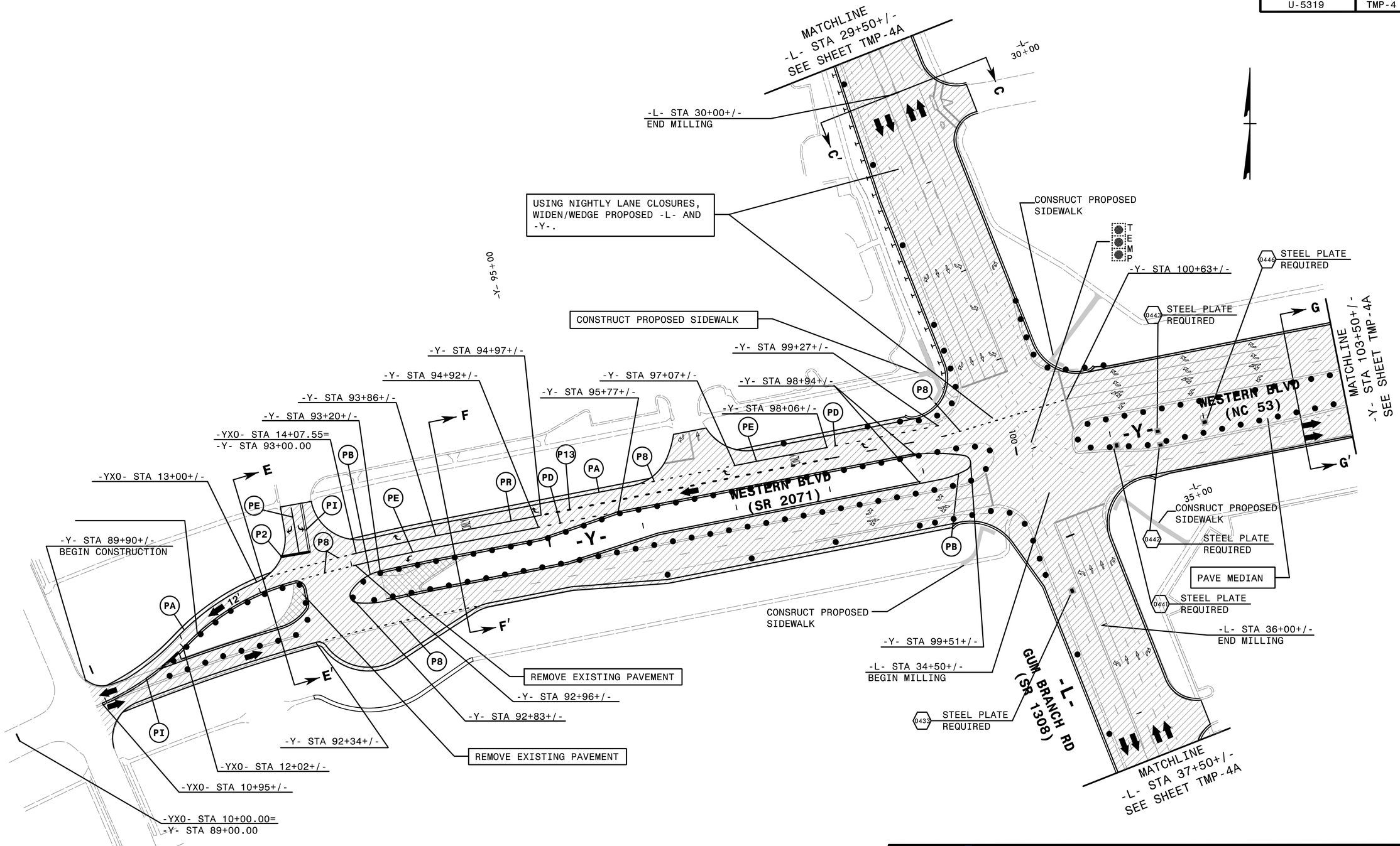

REFER TO SHEETS TMP-2A FOR CUT SECTION(S).

REMOVE CONFLICTING PAVEMENT MARKING.

HNTB

HNTB NORTH CAROLINA, P.C.
343 E. Six Forks Road, Suite 200
Raleigh, North Carolina 27609
NC License No: C-1554

APPROVED: Helen Shyu
0F15975A95E44EF...

DATE: 4/11/2018

SEAL

NORTH CAROLINA PROFESSIONAL SEAL 042517 ENGINEER HELEN SHYU

DOCUMENT NOT CONSIDERED FINAL UNLESS ALL SIGNATURES COMPLETED

STATE OF NORTH CAROLINA DEPARTMENT OF TRANSPORTATION

TRANSPORTATION MANAGEMENT PLAN

PHASE II DETAIL

2/26/2018
...\TCP\U5319_tc_TMP-4_P2dl.dgn
HNTB

DocuSign Envelope ID: AF1260FE-D4E4-4A7E-A171-CD01A3D15DF3

PROJ. REFERENCE NO.	SHEET NO.
U-5319	TMP-4A

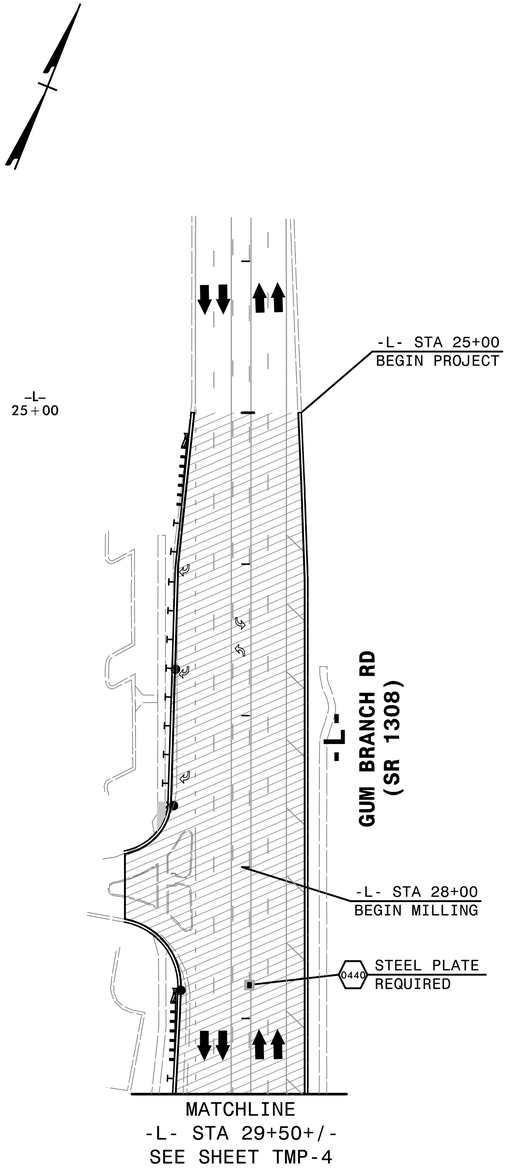

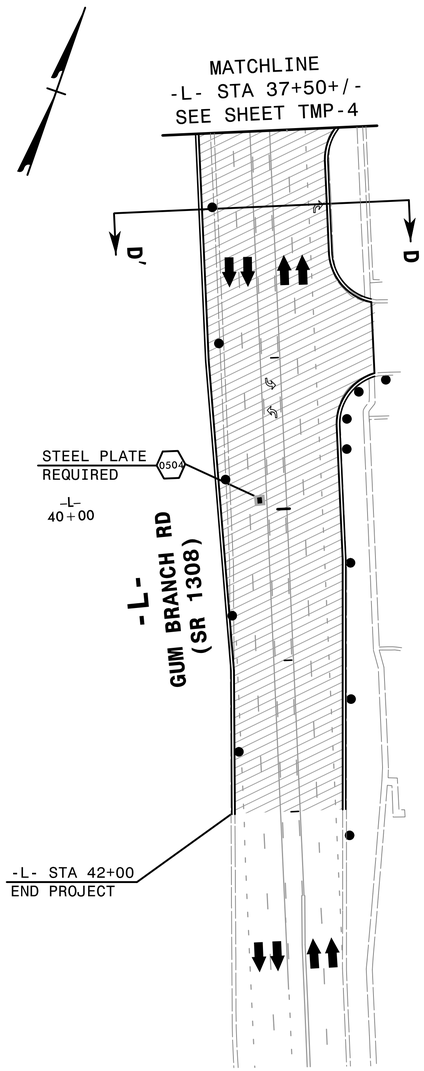

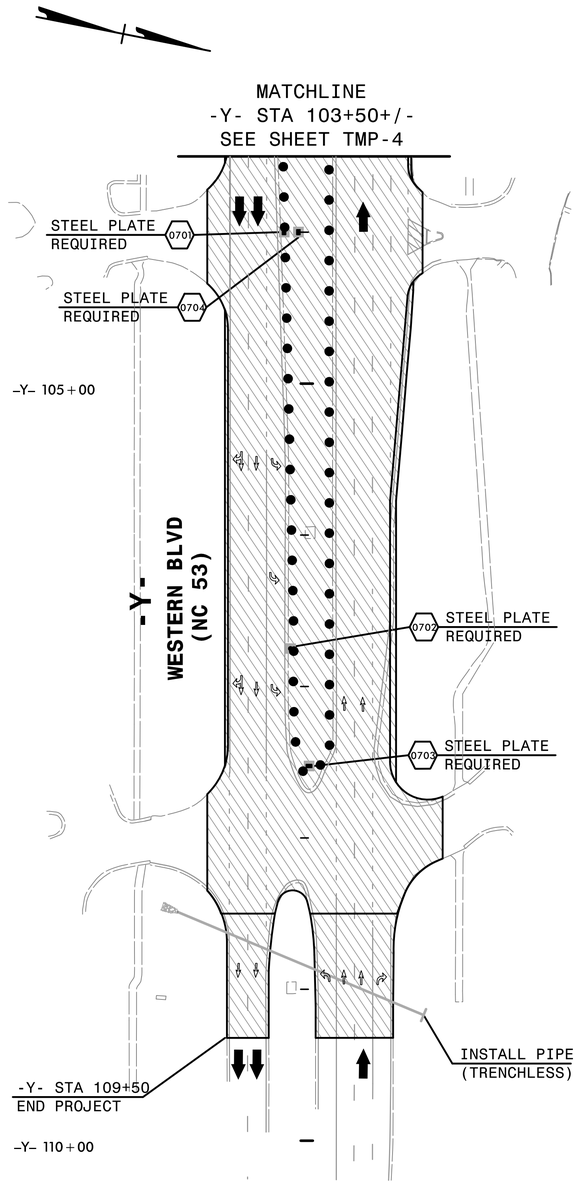

APPROVED: Helen Shyu (DocuSigned by: 0F1575A95E44EF...)

DATE: 4/11/2018

SEAL

NORTH CAROLINA PROFESSIONAL SEAL 042517 ENGINEER HELEN SHYU

DOCUMENT NOT CONSIDERED FINAL UNLESS ALL SIGNATURES COMPLETED

STATE OF NORTH CAROLINA • DEPARTMENT OF TRANSPORTATION •

TRANSPORTATION MANAGEMENT PLAN

PHASE II DETAIL

HNTB
HNTB NORTH CAROLINA, P.C.
343 E. Six Forks Road, Suite 200
Raleigh, North Carolina 27609
NC License No: C-1554

2/26/2018
...\TCP\U5319_tc_TMP-4A_P2d2.dgn
HNTB

DocuSign Envelope ID: AF1260FE-D4E4-4A7E-A171-CD01A3D15DF3

PROJ. REFERENCE NO.	SHEET NO.
U-5319	TMP-5

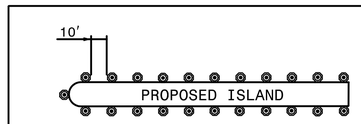

TYPICAL MONOLITHIC ISLAND CONSTRUCTION

REFER TO SHEETS TMP-2B FOR CUT SECTION(S).

REMOVE CONFLICTING PAVEMENT MARKING.

SEE PMP PLANS FOR PLACEMENT OF PAVEMENT MARKING LINES

HNTB NORTH CAROLINA, P.C.
343 E. Six Forks Road, Suite 200
Raleigh, North Carolina 27609
NC License No: C-1554

APPROVED: Docusigned by: Helen Shyu DF15975A95E44EF...

DATE: 4/11/2018

SEAL

NORTH CAROLINA PROFESSIONAL SEAL 042517 ENGINEER HELEN SHYU

STATE OF NORTH CAROLINA · DEPARTMENT OF TRANSPORTATION

DOCUMENT NOT CONSIDERED FINAL UNLESS ALL SIGNATURES COMPLETED

TRANSPORTATION MANAGEMENT PLAN

PHASE III DETAIL

2/26/2018
...\TCP\U5319_tc_TMP-5_P3dl.dgn
HNTB

DocuSign Envelope ID: 518FC0D5-29A2-4ADD-9ECB-AD5DBF09F9F2

T.I.P.: U-5319

CONTRACT:

STATE OF NORTH CAROLINA
DEPARTMENT OF TRANSPORTATION

PAVEMENT MARKING PLAN
ONSLOW COUNTY

TIP NO.	SHEET NO.
U-5319	PMP-1

APPROVED: DocuSigned by: Andrew D Klinksiek E3D78FB4596E44B...

DATE: 4/11/2018

SEAL

NORTH CAROLINA PROFESSIONAL SEAL 40311 ENGINEER ANDREW D. KLINKSIEK

DOCUMENT NOT CONSIDERED FINAL UNLESS ALL SIGNATURES COMPLETED

INDEX

SHEET NO.	DESCRIPTION
PMP-1	PAVEMENT MARKING PLAN COVER SHEET
PMP-1A	FINAL PAVEMENT MARKING SCHEDULE AND LEGEND
PMP-2-4	PAVEMENT MARKING DETAILS
PMP-5-5A	PAVEMENT MARKING CROSSWALK GUIDANCE DETAIL

ROADWAY STANDARD DRAWING

THE FOLLOWING ROADWAY STANDARDS AS APPEAR IN "ROADWAY STANDARD DRAWINGS" - PROJECT SERVICES UNIT - N.C. DEPARTMENT OF TRANSPORTATION - RALEIGH, N.C., DATED JANUARY 2018 ARE APPLICABLE TO THIS PROJECT AND BY REFERENCE HEREBY ARE CONSIDERED A PART OF THESE PLANS:

STD. NO.	TITLE
1205.01	PAVEMENT MARKINGS - LINE TYPES AND OFFSETS
1205.02	PAVEMENT MARKINGS - TWO-LANE AND MULTILANE ROADWAYS
1205.04	PAVEMENT MARKINGS - INTERSECTIONS
1205.05	PAVEMENT MARKINGS - TURN LANES
1205.06	PAVEMENT MARKINGS - LANE DROPS
1205.08	PAVEMENT MARKINGS - SYMBOLS AND WORD MESSAGES
1205.09	PAVEMENT MARKINGS - PAINTED ISLANDS
1205.13	PAVEMENT MARKINGS - LANE REDUCTIONS
1253.01	RAISED PAVEMENT MARKERS - SNOWPLOWABLE
1261.01	GUARDRAIL AND BARRIER DELINEATORS - INSTALLATION SPACING
1261.02	GUARDRAIL AND BARRIER DELINEATORS - TYPES AND MOUNTING
1262.01	GUARDRAIL END DELINEATION

GENERAL NOTES

THE FOLLOWING GENERAL NOTES APPLY AT ALL TIMES FOR THE DURATION OF THE CONSTRUCTION PROJECT, EXCEPT WHEN OTHERWISE NOTED IN THE PLAN, OR DIRECTED BY THE ENGINEER.

A) INSTALL PAVEMENT MARKINGS AND PAVEMENT MARKERS ON THE FINAL SURFACE AS FOLLOWS:

ROAD NAME	MARKING	MARKER
-L- SR 1308 (GUM BRANCH RD)	THERMOPLASTIC	SNOWPLOWABLE REFLECTIVE
-Y- NC 53/SR 2071 (WESTERN BLVD)	THERMOPLASTIC	NO MARKERS

B) TIE PROPOSED PAVEMENT MARKING LINES TO EXISTING PAVEMENT MARKING LINES.

C) REMOVE/REPLACE ANY CONFLICTING/DAMAGED PAVEMENT MARKINGS AND MARKERS.

D) PASSING ZONES WILL BE DETERMINED IN THE FIELD AND MUST BE APPROVED BY THE ENGINEER.

E) STOP BAR LOCATION AT NON-SIGNALIZED INTERSECTIONS MAY BE ADJUSTED AS DIRECTED BY THE ENGINEER.

F) UNLESS OTHERWISE SPECIFIED, HEATED-IN-PLACE THERMOPLASTIC MAY BE USED IN LIEU OF EXTRUDED THERMOPLASTIC FOR STOP BARS, SYMBOLS, CHARACTERS AND DIAGONALS. IF HEATED-IN-PLACE IS USED, IT SHALL BE PAID FOR USING THE EXTRUDED THERMOPLASTIC PAY ITEM.

G) SEE ROADWAY PLANS FOR ALTERNATE CURB RAMP DESIGNS WHEN INDICATED ON PAVEMENT MARKING DETAIL SHEETS.

NCDOT CONTACTS:

J. Leonard, PE	DIVISION 3 - DIVISION TRAFFIC ENGINEER
R. Coke Gray, III, PE	DIVISION 3 - REGIONAL TRAFFIC ENGINEER

PLAN PREPARED BY: HNTB NORTH CAROLINA, P.C.

Andrew Klinksiek, PE, PTOE	PROJECT ENGINEER
Jenifer Phillips	DESIGN TECHNICIAN

HNTB NORTH CAROLINA, P.C.
343 E. Six Forks Road, Ste 200
Raleigh, North Carolina 27609
919-546-8997
NC License No: C-1554

4/11/2018
HNTB
\\gstn\U5319_PMP_pmp01_TITLE.dgn

DocuSign Envelope ID: 518FC0D5-29A2-4ADD-9ECB-AD5DBF09F9F2

TIP NO.	SHEET NO.
U-5319	PMP-1A

APPROVED: DocuSigned by: Andrew D. Klinksiek E3D78FB4596E44B...

DATE: 4/11/2018

SEAL

NORTH CAROLINA PROFESSIONAL SEAL 40311 ENGINEER ANDREW D. KLINKSIEK

DOCUMENT NOT CONSIDERED FINAL UNLESS ALL SIGNATURES COMPLETED

FINAL PAVEMENT MARKING SCHEDULE

MATERIAL	SYMBOL	DESCRIPTION
PAVEMENT MARKING		
THERMOPLASTIC (4", 90 MILS)		
	TA	WHITE EDGELINE
	TB	YELLOW EDGELINE
THERMOPLASTIC (4", 120 MILS)		
	T8	WHITE MINI SKIPS (2'/6')
	T9	YELLOW MINI SKIPS (2'/6')
	TC	WHITE SKIP
	TD	WHITE MINISKIP (3'/9')
	TE	WHITE SOLID LANE LINE
	TI	YELLOW DOUBLE CENTER
THERMOPLASTIC (8", 90 MILS)		
	TN	WHITE GORELINE
THERMOPLASTIC (8", 120 MILS)		
	T13	WHITE MINISKIP (3'/9')
	TR	WHITE SOLID LANE LINE
THERMOPLASTIC (12", 90 MILS)		
	TU	WHITE DIAGONAL
	TV	YELLOW DIAGONAL
THERMOPLASTIC (12", 120 MILS)		
	TT	WHITE SOLID LANE LINE
THERMOPLASTIC (24", 120 MILS)		
	T2	WHITE STOPBAR
	T3	WHITE CROSSWALK LINE
THERMOPLASTIC PAVEMENT MARKING SYMBOLS(90 MILS)		
	UA	LEFT TURN ARROW
	UB	RIGHT TURN ARROW
	UC	STRAIGHT ARROW
	UD	COMBO. STRAIGHT/LEFT ARROW
	UE	COMBO. STRAIGHT/RIGHT ARROW
	UT	U TURN ARROW
THERMOPLASTIC PAVEMENT MARKING CHARACTER(120 MILS)		
	UI	ALPHANUMERIC CHAR.
SNOWPLOWABLE PAVEMENT MARKERS (NOT SHOWN)		
	ME	YELLOW & YELLOW
	MF	CRYSTAL & RED

LEGEND

GENERAL

DIRECTION OF TRAFFIC FLOW

NORTH ARROW

PROPOSED PVMT. ---------- EXIST. PVMT.

PAVEMENT MARKINGS

PAVEMENT MARKING SYMBOLS

PAVEMENT MARKING SYMBOLS

UA

UB

UC

UD

UE

ONLY UI

UT

HNTB

HNTB NORTH CAROLINA, P.C.
343 E. Six Forks Road, Ste 200
Raleigh, North Carolina 27609
919-546-8997
NC License No: C-1554

PAVEMENT MARKING DETAIL

2/1/2018
...\ustn\U5319_PMP_pmp01A.dgn
HNTB

DocuSign Envelope ID: 518FC0D5-29A2-4ADD-9ECB-AD5DBF09F9F2

CURB RAMP LOCATIONS

1. -L- STA 33+10+/- (63.81′ RT) (STANDARD)
2. -Y- STA 99+28+/- (69.81′ LT) (STANDARD)
3. -Y- STA 99+51+/- (65.03′ RT) (STANDARD)
4. -L- STA 34+65+/- (66.93′ RT) (STANDARD)
5. -L- STA 34+88+/- (55.77′ LT) (STANDARD)
6. -Y- STA 100+96+/- (62.27′ RT) (STANDARD)
7. -Y- STA 100+63+/- (80.03′ LT) (STANDARD)
8. -L- STA 33+22+/- (50.53′ LT) (STANDARD)

TIP NO.	SHEET NO.
U-5319	PMP-2

APPROVED: DocuSigned by: Andrew D Klinksiek E3D78FB4596E44B...

DATE: 4/11/2018

SEAL

NORTH CAROLINA PROFESSIONAL SEAL 40311 ENGINEER ANDREW D. KLINKSIEK

DOCUMENT NOT CONSIDERED FINAL UNLESS ALL SIGNATURES COMPLETED

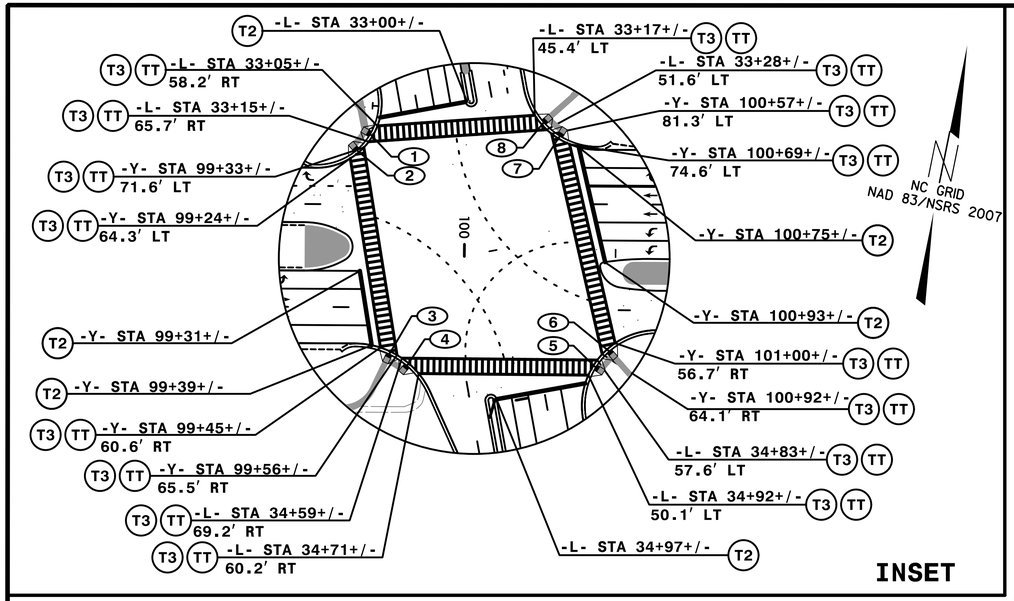

INSET

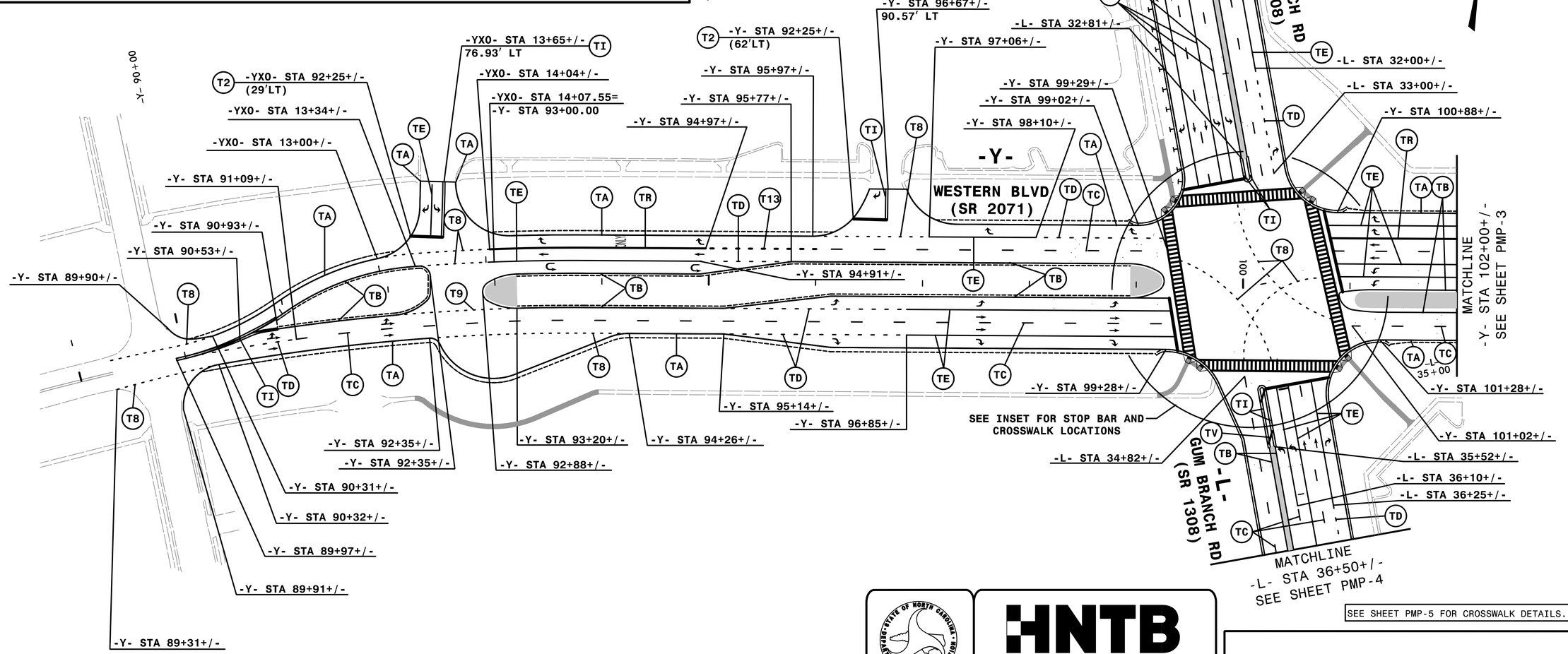

NOTE: ALL LANE WIDTHS ARE 12′ UNLESS OTHERWISE SHOWN.

SEE SHEET PMP-5 FOR CROSSWALK DETAILS.

HNTB NORTH CAROLINA, P.C.
343 E. Six Forks Road, Ste 200
Raleigh, North Carolina 27609
919-546-8997
NC License No: C-1554

PAVEMENT MARKING DETAIL

2/1/2018
...\U5319_PMP_pmp02.dgn
HNTB

DocuSign Envelope ID: 518FC0D5-29A2-4ADD-9ECB-AD5DBF09F9F2

TIP NO.	SHEET NO.
U-5319	PMP-3

APPROVED: DocuSigned by: Andrew D Klinksiek E3D78FB4596E44B...

DATE: 4/11/2018

SEAL

NORTH CAROLINA PROFESSIONAL SEAL 40311 ENGINEER ANDREW D. KLINKSIEK

DOCUMENT NOT CONSIDERED FINAL UNLESS ALL SIGNATURES COMPLETED

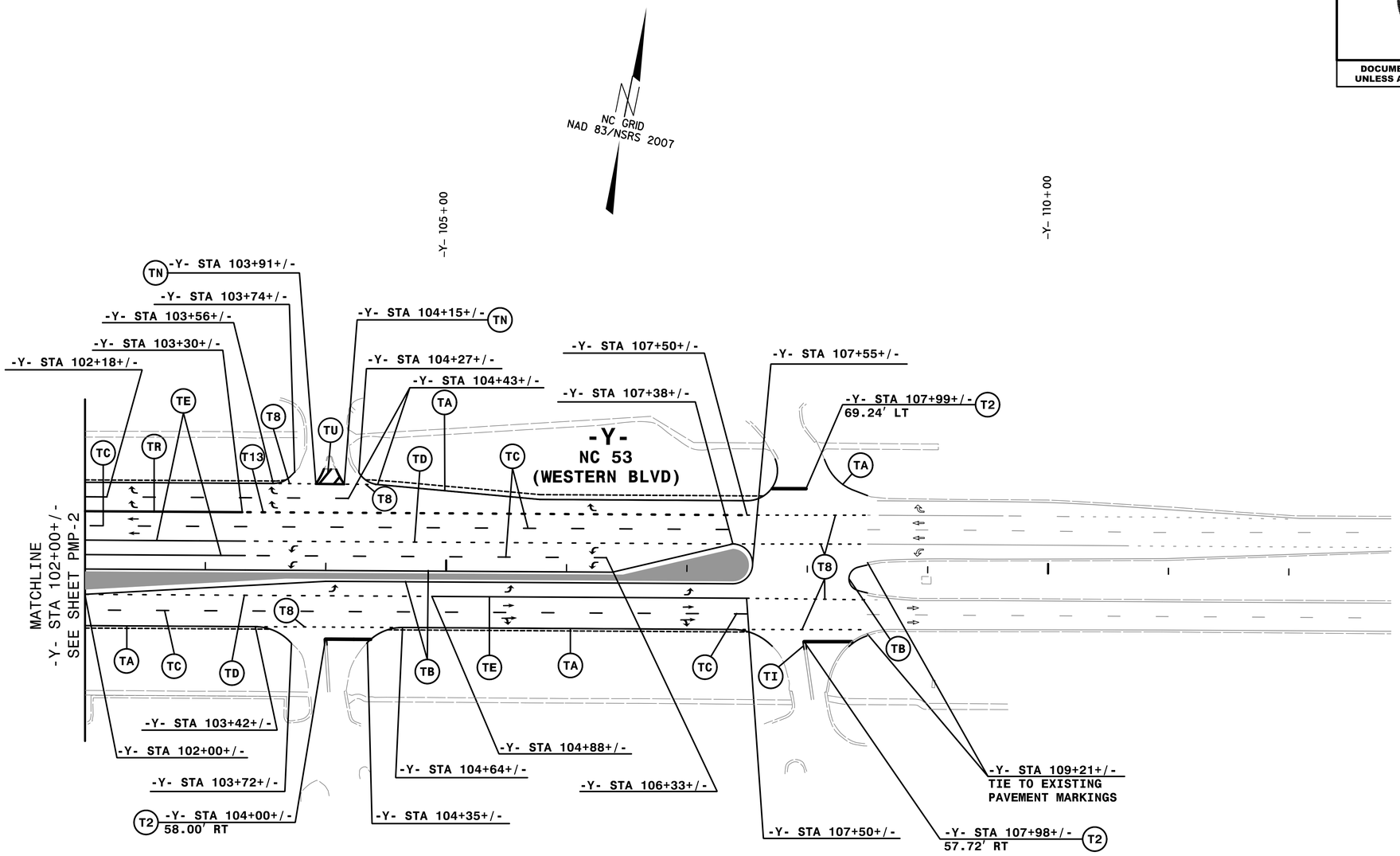

NOTE: ALL LANE WIDTHS ARE 12′ UNLESS OTHERWISE SHOWN.

HNTB NORTH CAROLINA, P.C.
343 E. Six Forks Road, Ste 200
Raleigh, North Carolina 27609
919-546-8997
NC License No: C-1554

PAVEMENT MARKING DETAIL

2/1/2018
N:\STIP\U5319_PMP_pmp03.dgn
HNTB

DocuSign Envelope ID: 518FC0D5-29A2-4ADD-9ECB-AD5DBF09F9F2

TIP NO.	SHEET NO.
U-5319	PMP-4

APPROVED: DocuSigned by: Andrew D Klinksiek E3D78FB4596E44B...

DATE: 4/11/2018

SEAL

NORTH CAROLINA PROFESSIONAL SEAL 40311 ENGINEER ANDREW D. KLINKSIEK

DOCUMENT NOT CONSIDERED FINAL UNLESS ALL SIGNATURES COMPLETED

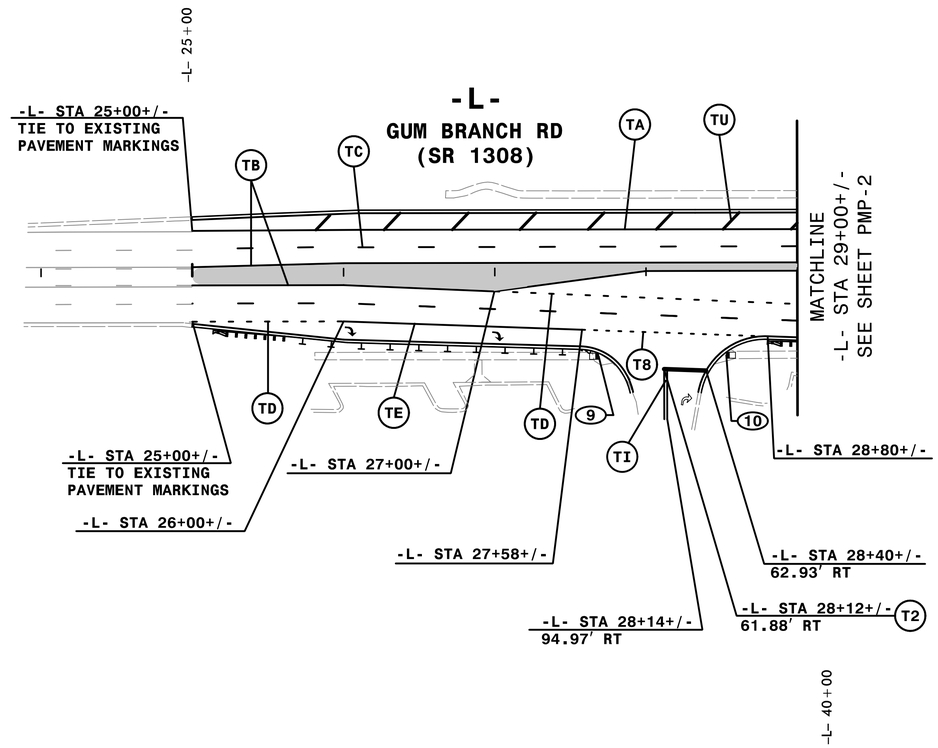

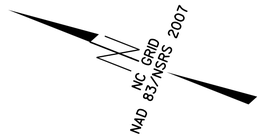

CURB RAMP LOCATIONS

9 -L- STA 27+69+/- 53.33' RT (TYPE 1A)

10 -L- STA 28+53+/- 52.77' RT (TYPE 1A)

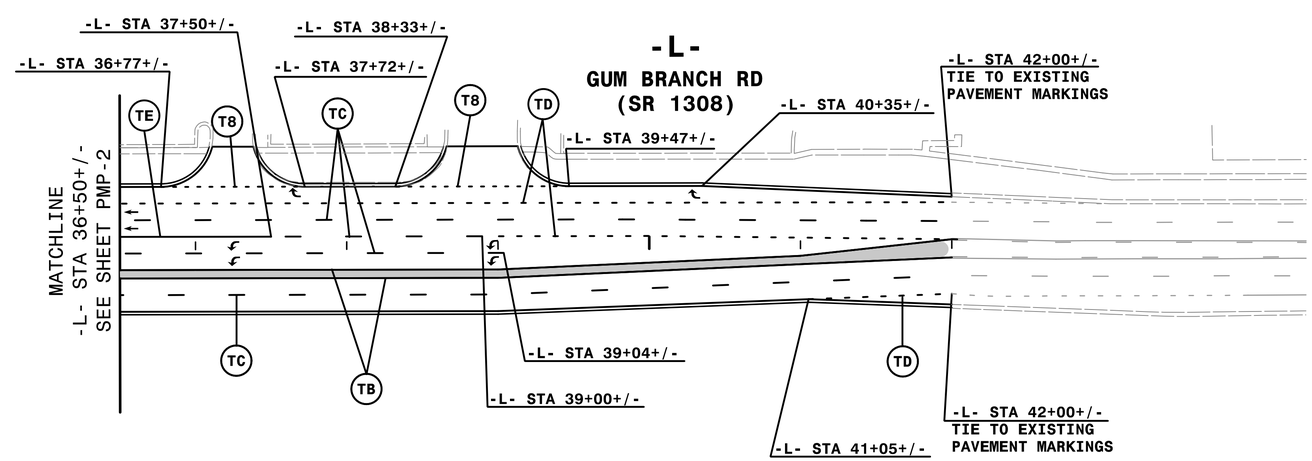

NOTE: ALL LANE WIDTHS ARE 12' UNLESS OTHERWISE SHOWN.

STATE OF NORTH CAROLINA DEPARTMENT OF TRANSPORTATION

HNTB

HNTB NORTH CAROLINA, P.C.
343 E. Six Forks Road, Ste 200
Raleigh, North Carolina 27609
919-546-8997
NC License No: C-1554

PAVEMENT MARKING DETAIL

2/1/2018
...\ustn\U5319_PMP_pmp04.dgn
HNTB

DocuSign Envelope ID: 518FC0D5-29A2-4ADD-9ECB-AD5DBF09F9F2

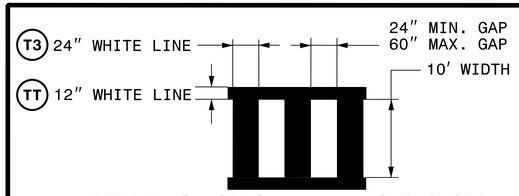

DETAIL C- SPECIAL EMPHASIS CROSSWALK

ALL SIGNALIZED PEDESTRIAN CROSSWALKS SHALL BE SPECIAL EMPHASIS CROSSWALKS AS SPECIFIED IN NCODT DIVISION 3 HIGH-VISIBILITY CROSSWALK POLICY.

TIP NO.	SHEET NO.
U-5319	PMP-5

APPROVED: DocuSigned by: Andrew D Klinksiek E3D78FB4596E44B...

DATE: 4/11/2018

SEAL

NORTH CAROLINA PROFESSIONAL SEAL 40311 ENGINEER ANDREW D. KLINKSIEK

DOCUMENT NOT CONSIDERED FINAL UNLESS ALL SIGNATURES COMPLETED

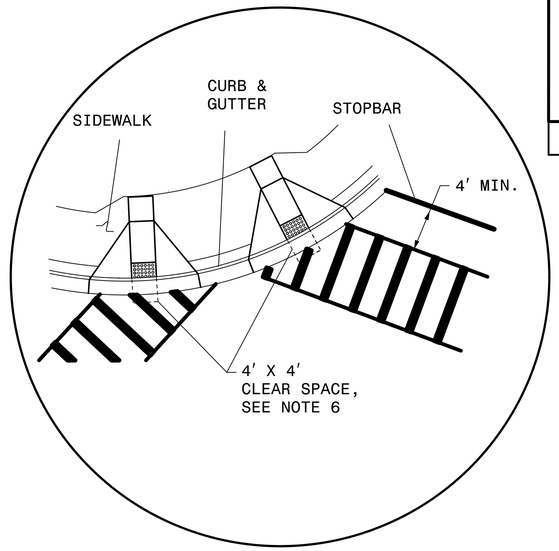

DETAIL 'A'- DUAL CURB RAMPS

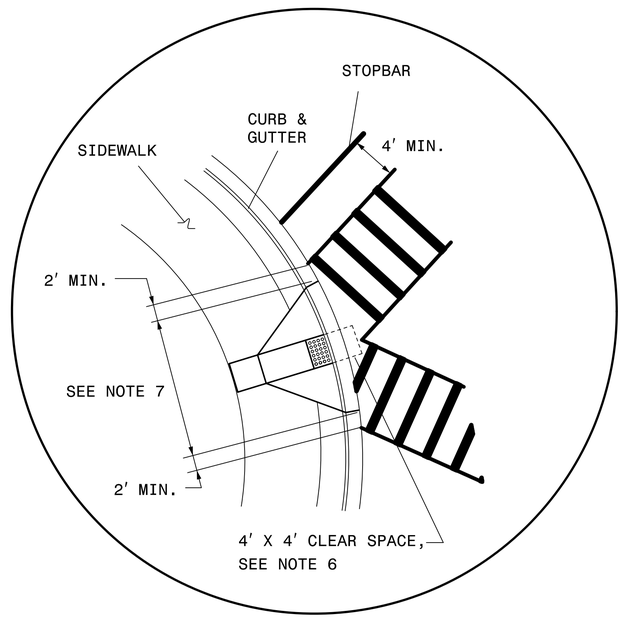

DETAIL 'B'- SINGLE DIAGONAL CURB RAMP

NOTES:

1. USE THE DETAILS ABOVE AND THE FOLLOWING NOTES FOR GUIDANCE IN PLACING CROSSWALK MARKINGS. REFER TO NCDOT ROADWAY STANDARD DRAWINGS, MUTCD AND ADA STANDARDS FOR ADDITIONAL GUIDANCE.
2. THE LOCATION AND TYPE OF CROSSWALK MARKINGS SHOWN ON THE ABOVE DETAILS ARE FOR REFERENCE ONLY. LOCATE CROSSWALK MARKINGS AS SHOWN ON THE PROJECT DETAIL SHEETS OR AS DIRECTED BY THE ENGINEER. THE CROSSWALK MARKING TYPE, SPECIAL EMPHASIS, SHALL BE INSTALLED AS SPECIFIED ON THE PROJECT DETAIL SHEETS OR AS DIRECTED BY THE ENGINEER.
3. THE SPECIAL EMPHASIS CROSSWALK IS TWO WHITE 12″ TRANSVERSE LINES WITH A 10′ GAP BETWEEN THE LINES AND WHITE 24″ WIDE LONGITUDAL LINES WITH 60″ MAXIMUM GAPS BETWEEN LINES, SEE DETAIL 'C'.
4. STOP BARS SHOULD BE PLACED A MINIMUM OF 4′ IN ADVANCE OF NEAREST CROSSWALK LINE.
5. SET BACK DISTANCE FROM INSIDE CROSSWALK MARKING TO NEAREST EDGE OF TRAVEL IS 4′ MIN.
6. BEYOND THE BOTTOM GRADE BREAK, A CLEAR SPACE OF 4′ X 4′ MINIMUM SHALL BE PROVIDED WITHIN THE MARKINGS.
7. SINGLE DIAGONAL CURB RAMPS WITH FLARED SIDES SHALL HAVE A SEGMENT OF CURB 2 FEET LONG MINIMUM LOCATED ON EACH SIDE OF THE CURB RAMP AND WITHIN THE MARKED CROSSING, SEE DETAIL 'B'.
8. CURB RAMPS SHALL BE CONSTRUCTED IN ACCORDANCE TO THE LATEST NCDOT ROADWAY STANDARD DRAWINGS.

STATE OF NORTH CAROLINA DEPARTMENT OF TRANSPORTATION

HNTB
HNTB NORTH CAROLINA, P.C.
343 E. Six Forks Road, Ste 200
Raleigh, North Carolina 27609
919-546-8997
NC License No: C-1554

CROSSWALK PAVEMENT MARKING GUIDANCE DETAIL

2/1/2018
N:\STR\U5319_PMP_pmp05.dgn
HNTB

DocuSign Envelope ID: 518FC0D5-29A2-4ADD-9ECB-AD5DBF09F9F2

TIP NO.	SHEET NO.
U-5319	PMP-5A

APPROVED: DocuSigned by: Andrew D Klinksiek E3D78FB4596E44B...

DATE: 4/11/2018

SEAL

NORTH CAROLINA PROFESSIONAL SEAL 40311 ENGINEER ANDREW D. KLINKSIEK

DOCUMENT NOT CONSIDERED FINAL UNLESS ALL SIGNATURES COMPLETED

PAVEMENT MARKING DETAIL

SPECIAL EMPHASIS HI-VISIBILITY CROSSWALK MARKING DETAIL

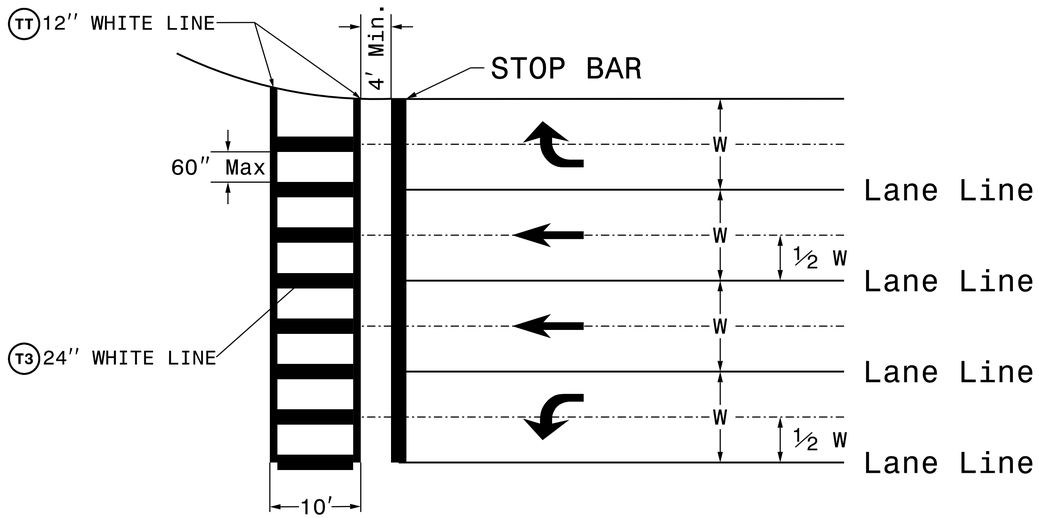

NOTES: SPACING OF CROSSWALK LINES POSITIONED TO AVOID WHEELPATHS

4/11/2018
...\Us†n\U5319_PMP_pmp05_5a.dgn
HNTB

HNTB NORTH CAROLINA, P.C.
343 E. Six Forks Road, Suite 200
Raleigh, North Carolina 27609
NC License No: C-1554
(919) 546-8997

SPECIAL EMPHASIS HI-VISIBILITY CROSSWALK MARKING DETAIL

TIP PROJECT: U-5319

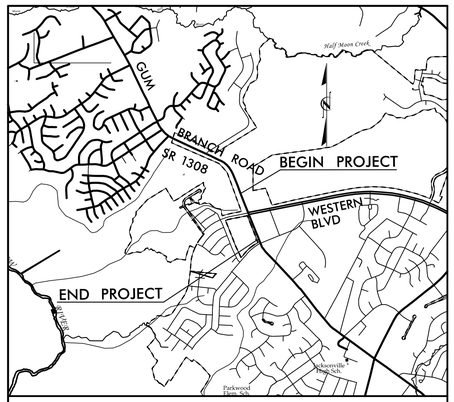

VICINITY MAP

STATE OF NORTH CAROLINA
DIVISION OF HIGHWAYS

PLAN FOR PROPOSED
HIGHWAY EROSION CONTROL

ONSLOW COUNTY

LOCATION: INTERSECTION OF SR 1308 (GUM BRANCH ROAD) AND NC 53 (WESTERN BOULEVARD)

TYPE OF WORK: GRADING, DRAINAGE, PAVING AND SIGNALS

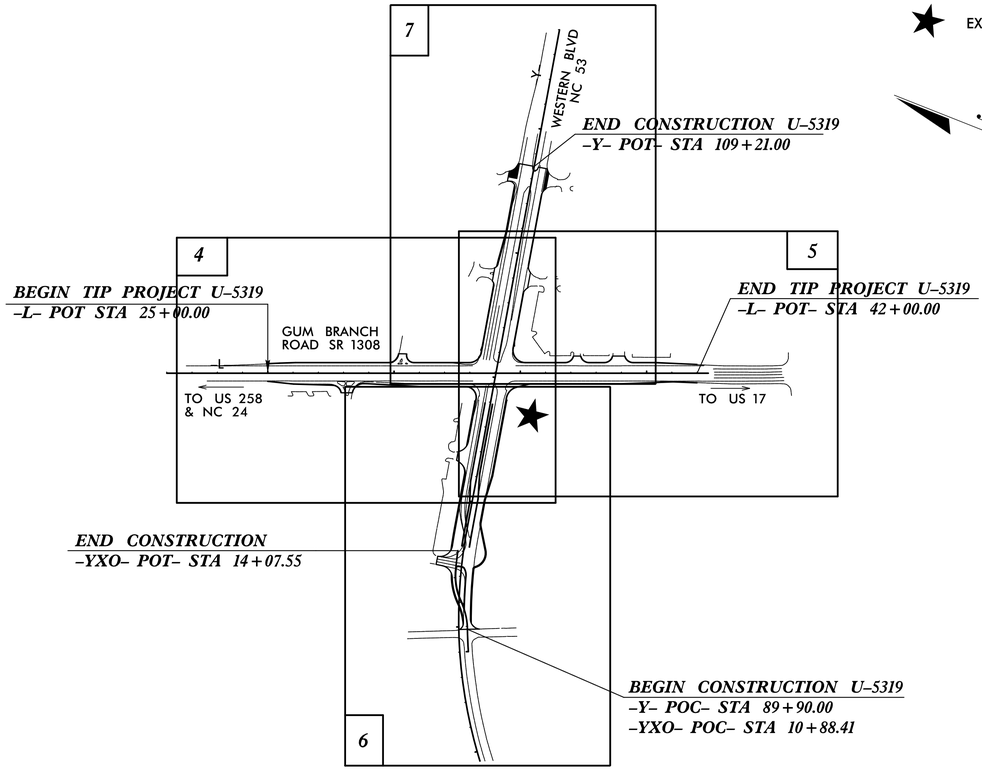

★ EXISTING TRAFFIC SIGNAL

NAD 83/ NSRS 2007

STATE	STATE PROJECT REFERENCE NO.	SHEET NO.	TOTAL SHEETS
N.C.	U-5319	EC-1	

STATE PROJ. NO.	F. A. PROJ. NO.	DESCRIPTION

EROSION AND SEDIMENT CONTROL MEASURES

Std. #	Description	Symbol
1630.03	Temporary Silt Ditch	TSD
1630.05	Temporary Diversion	TD
1605.01	Temporary Silt Fence	
1606.01	Special Sediment Control Fence	
1622.01	Temporary Berms and Slope Drains	
	Silt Basin Type B	
1633.01	Temporary Rock Silt Check Type-A	
	Temporary Rock Silt Check Type-A with Matting and Polyacrylamide (PAM)	
	Temporary Rock Silt Check Type-B	
	Wattle / Coir Fiber Wattle	
	Wattle / Coir Fiber Wattle with Polyacrylamide (PAM)	
1634.01	Temporary Rock Sediment Dam Type-A	
1634.02	Temporary Rock Sediment Dam Type-B	
1635.01	Rock Pipe Inlet Sediment Trap Type-A	
1635.02	Rock Pipe Inlet Sediment Trap Type-B	
1630.04	Stilling Basin	
1630.06	Special Stilling Basin	
	Rock Inlet Sediment Trap:	
1632.01	Type A	A
1632.02	Type B	B
1632.03	Type C	C
	Skimmer Basin	
	Tiered Skimmer Basin	
	Infiltration Basin	

GRAPHIC SCALES

50 25 0 50 100
PLANS

50 25 0 50 100
PROFILE (HORIZONTAL)

10 5 0 10 20
PROFILE (VERTICAL)

THESE EROSION AND SEDIMENT CONTROL PLANS COMPLY WITH THE REGULATIONS SET FORTH BY THE NCG-010000 GENERAL CONSTRUCTION PERMIT EFFECTIVE AUGUST 1, 2016 AND ISSUED BY THE NORTH CAROLINA DEPARTMENT OF ENVIRONMENT AND NATURAL RESOURCES DIVISION OF WATER RESOURCES.

Prepared In the Office of:

HNTB NORTH CAROLINA, P.C.
343 E. Six Forks Road, Suite 200
Raleigh, North Carolina 27609
NC License No: C-1554

Designed by:

NATALIE CHAN, P.E. ***3444***

NAME *LEVEL III CERTIFICATION NO.*

Reviewed In the Office of:

ROADSIDE ENVIRONMENTAL UNIT
1 South Wilmington St.
Raleigh, NC 27611

2018 STANDARD SPECIFICATIONS

Reviewed by:

WES CHANDLER

Roadway Standard Drawings

The following roadway english standards as appear in "Roadway Standard Drawings"– Roadway Design Unit – N. C. Department of Transportation – Raleigh, N. C., dated January 2018 and the latest revison thereto are applicable to this project and by reference hereby are considered a part of these plans.

1604.01	*Railroad Erosion Control Detail*	1632.01	*Rock Inlet Sediment Trap Type A*
1605.01	*Temporary Silt Fence*	1632.02	*Rock Inlet Sediment Trap Type B*
1606.01	*Special Sediment Control Fence*	1632.03	*Rock Inlet Sediment Trap Type C*
1607.01	*Gravel Construction Entrance*	1633.01	*Temporary Rock Silt Check Type A*
1622.01	*Temporary Berms and Slope Drains*	1633.02	*Temporary Rock Silt Check Type B*
1630.01	*Riser Basin*	1634.01	*Temporary Rock Sediment Dam Type A*
1630.02	*Silt Basin Type B*	1634.02	*Temporary Rock Sediment Dam Type B*
1630.03	*Temporary Silt Ditch*	1635.01	*Rock Pipe Inlet Sediment Trap Type A*
1630.04	*Stilling Basin*	1635.02	*Rock Pipe Inlet Sediment Trap Type B*
1630.05	*Temporary Diversion*	1640.01	*Coir Fiber Baffle*
1630.06	*Special Stilling Basin*	1645.01	*Temporary Stream Crossing*
1631.01	*Matting Installation*		

12/4/2017
"N:\Projects\ar-1308_EC_tsh.dgn"

PROJECT REFERENCE NO.	SHEET NO.
U-5319	EC-2
R/W SHEET NO.	
ROADWAY DESIGN ENGINEER	HYDRAULICS ENGINEER

EARTHEN DAM WITH SKIMMER DETAIL (EAST)

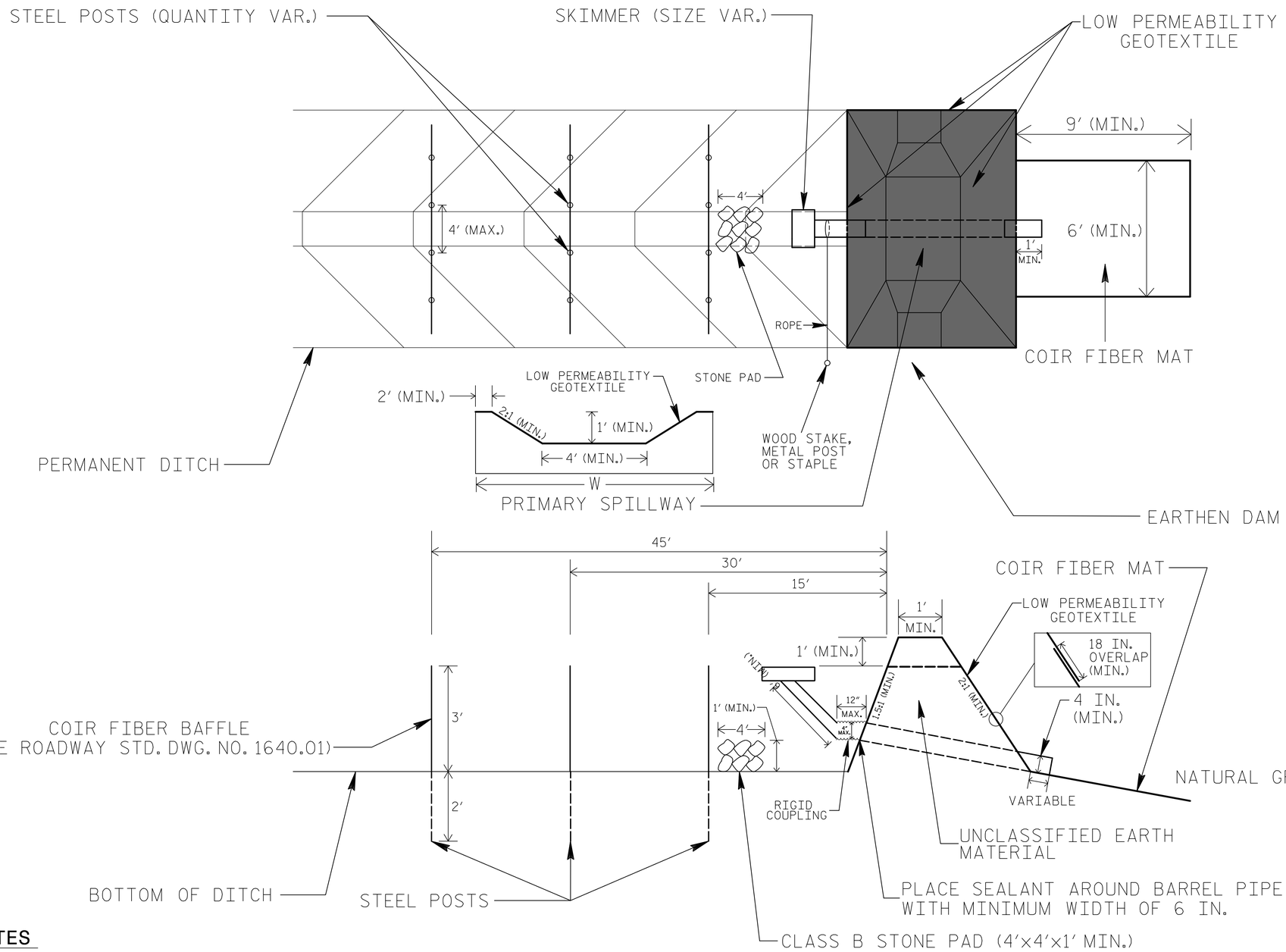

2″ x 2″ (nominal) WOODEN STAKE

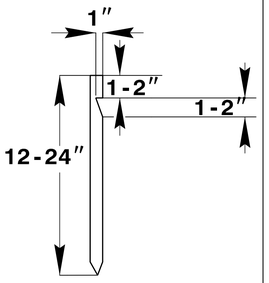

#10 STEEL REINFORCEMENT BAR

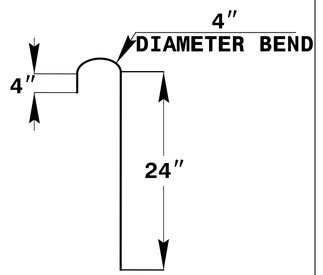

1″ (nominal) STAPLE

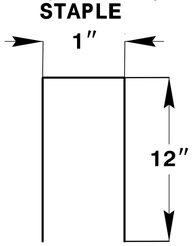

COIR FIBER MAT ANCHOR OPTIONS

NOTES

1. LIMIT EARTHEN DAM HEIGHT TO 5 FT.
2. DETERMINE PRIMARY SPILLWAY LENGTH (FT.) USING Q/0.8, WHERE Q IS FLOW RATE (CFS) INTO BASIN.
3. LOW PERMEABILITY GEOTEXTILE FOR PRIMARY SPILLWAY SHALL BE ONE CONTINUOUS PIECE OF MATERIAL OR OVERLAPPED 18 IN. (MIN.).

NOT TO SCALE

PROJECT REFERENCE NO.	SHEET NO.
U-5319	EC-2A
R/W SHEET NO.	
ROADWAY DESIGN ENGINEER	HYDRAULICS ENGINEER

COIR FIBER WATTLE WITH POLYACRYLAMIDE (PAM) DETAIL

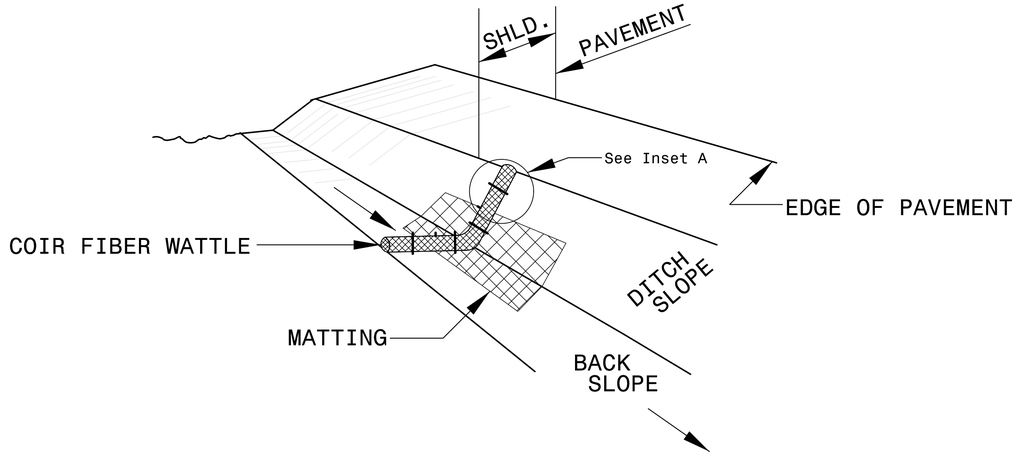

ISOMETRIC VIEW

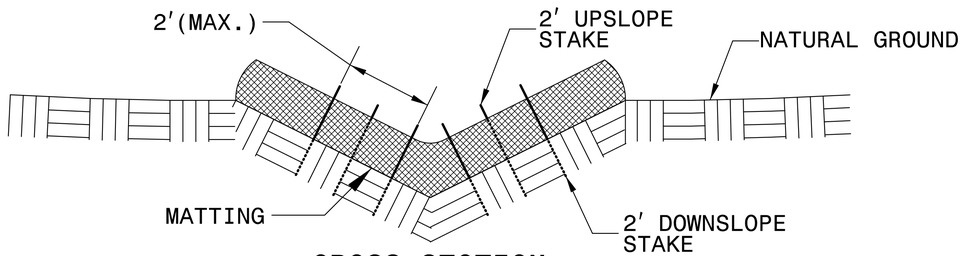

CROSS SECTION VEE DITCH

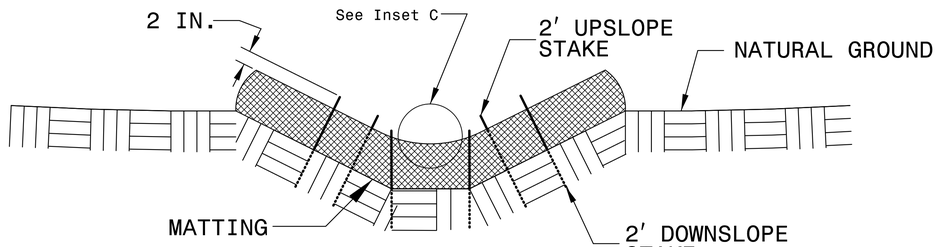

CROSS SECTION TRAPEZOIDAL DITCH

NOTES:

USE MINIMUM 12 IN. DIAMETER COIR FIBER (COCONUT FIBER) WATTLE.

USE 2 FT. WOODEN STAKES WITH A 2 IN. BY 2 IN. NOMINAL CROSS SECTION.

ONLY INSTALL WATTLE(S) TO A HEIGHT IN DITCH SO FLOW WILL NOT WASH AROUND WATTLE AND SCOUR DITCH SLOPES AND AS DIRECTED.

INSTALL A MINIMUM OF 2 UPSLOPE STAKES AND 4 DOWNSLOPE STAKES AT AN ANGLE TO WEDGE WATTLE TO BOTTOM OF DITCH.

PROVIDE STAPLES MADE OF 0.125 IN. DIAMETER STEEL WIRE FORMED INTO A U SHAPE NOT LESS THAN 12″ IN LENGTH.

INSTALL STAPLES APPROXIMATELY EVERY 1 LINEAR FOOT ON BOTH SIDES OF WATTLE AND AT EACH END TO SECURE IT TO THE SOIL.

INSTALL MATTING IN ACCORDANCE WITH SECTION 1631 OF THE STANDARD SPECIFICATIONS.

PRIOR TO POLYACRYLAMIDE (PAM) APPLICATION, OBTAIN A SOIL SAMPLE FROM PROJECT LOCATION, AND FROM OFFSITE MATERIAL, AND ANALYZE FOR APPROPRIATE PAM FLOCCULANT TO BE APPLIED TO EACH WATTLE.

INITIALLY APPLY 2 OUNCES OF ANIONIC OR NEUTRALLY CHARGED PAM OVER WATTLE WHERE WATER WILL FLOW AND 1 OUNCE OF PAM ON MATTING ON EACH SIDE OF WATTLE. REAPPLY PAM AFTER EVERY RAINFALL EVENT THAT IS EQUAL TO OR EXCEEDS 0.50 IN.

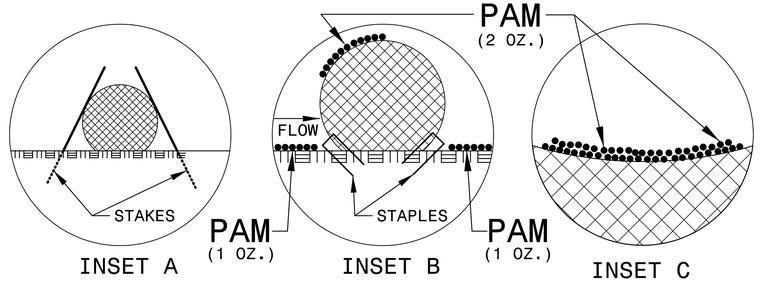

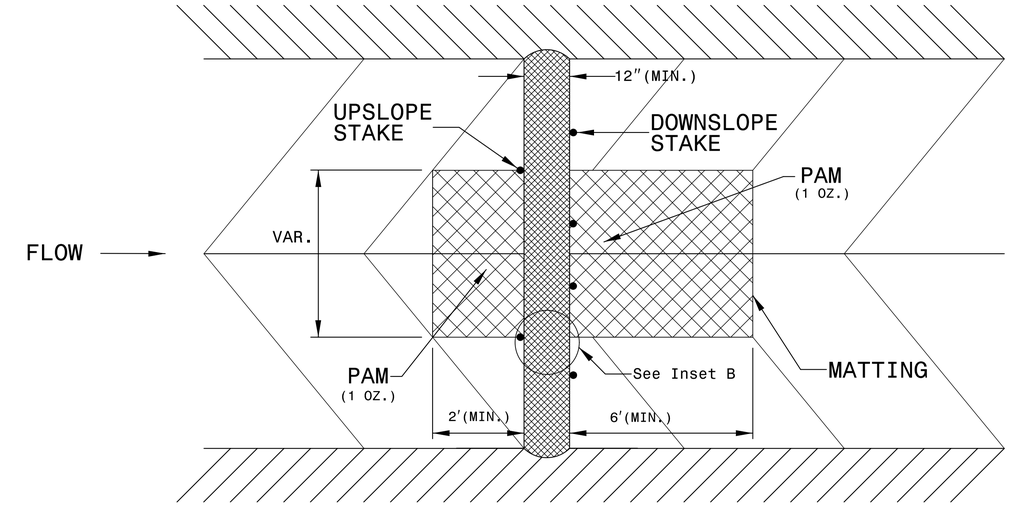

TOP VIEW

PROJECT REFERENCE NO.	SHEET NO.
U-5319	EC-2B
R/W SHEET NO.	
ROADWAY DESIGN ENGINEER	HYDRAULICS ENGINEER

SILT FENCE COIR FIBER WATTLE BREAK DETAIL

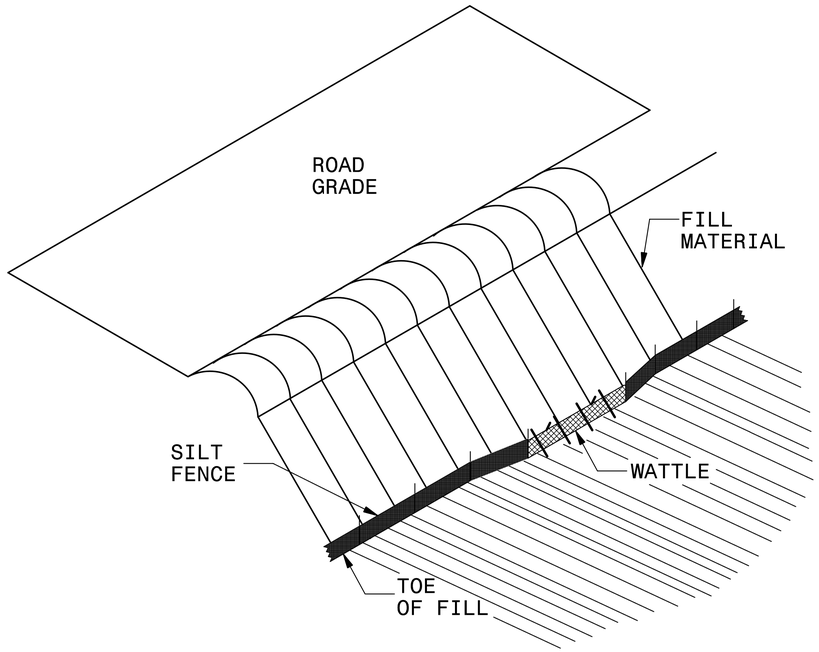

ISOMETRIC VIEW

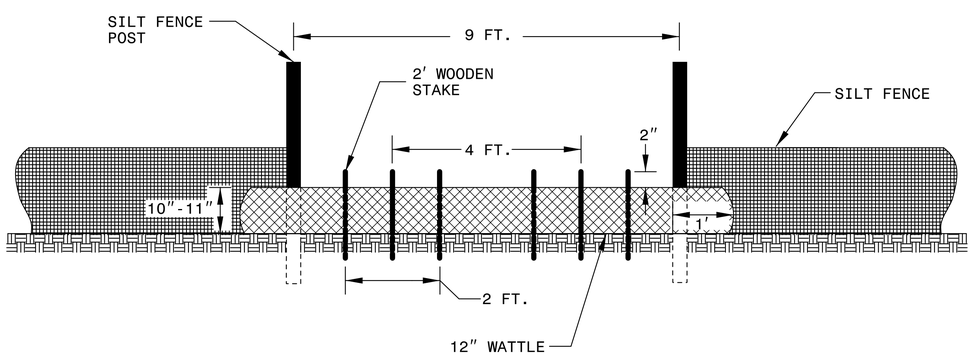

VIEW FROM SLOPE

NOTES:

USE MINIMUM 12 IN. DIAMETER COIR FIBER (COCONUT FIBER) WATTLE AND LENGTH OF 10 FT.

EXCAVATE A 1 TO 2 INCH TRENCH FOR WATTLE TO BE PLACED.

DO NOT PLACE WATTLE ON TOE OF SLOPE.

USE 2 FT. WOODEN STAKES WITH A 2 IN. BY 2 IN. NOMINAL CROSS SECTION.

INSTALL A MINIMUM OF 2 UPSLOPE STAKES AND 4 DOWNSLOPE STAKES AT AN ANGLE TO WEDGE WATTLE TO GROUND.

PROVIDE STAPLES MADE OF 0.125 IN. DIAMETER STEEL WIRE FORMED INTO A U SHAPE NOT LESS THAN 12″ IN LENGTH.

INSTALL STAPLES APPROXIMATELY EVERY 1 LINEAR FOOT ON BOTH SIDES OF WATTLE AND AT EACH END TO SECURE IT TO THE SOIL.

WATTLE INSTALLATION CAN BE ON OUTSIDE OF THE SILT FENCE AS DIRECTED.

INSTALL TEMPORARY SILT FENCE IN ACCORDANCE WITH SECTION 1605 OF THE STANDARD SPECIFICATIONS.

INSET A

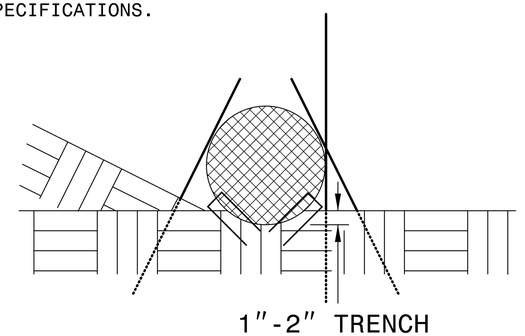

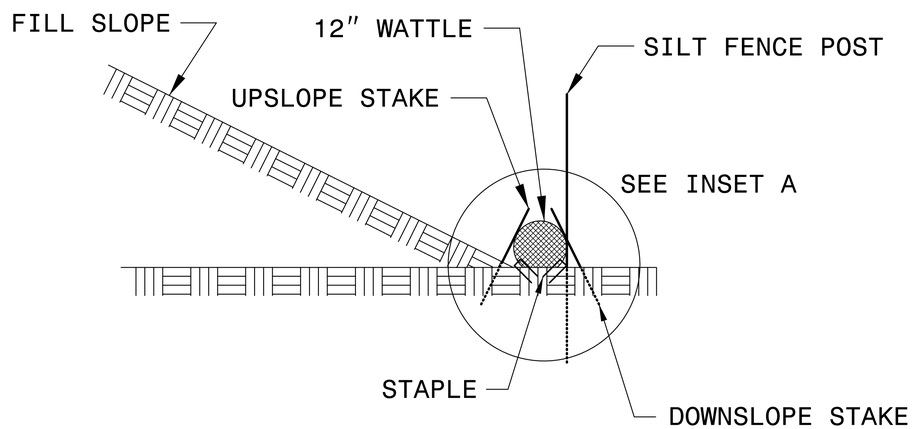

SIDE VIEW

PROJECT REFERENCE NO.	SHEET NO.
U-5319	EC-3
ROADWAY DESIGN ENGINEER	HYDRAULICS ENGINEER

DIVISION OF HIGHWAYS
STATE OF NORTH CAROLINA

SOIL STABILIZATION TIMEFRAMES

SITE DESCRIPTION	STABILIZATION TIME	TIMEFRAME EXCEPTIONS
PERIMETER DIKES, SWALES, DITCHES AND SLOPES	7 DAYS	NONE
HIGH QUALITY WATER (HQW) ZONES	7 DAYS	NONE
SLOPES STEEPER THAN 3:1	7 DAYS	IF SLOPES ARE 10' OR LESS IN LENGTH AND ARE NOT STEEPER THAN 2:1, 14 DAYS ARE ALLOWED.
SLOPES 3:1 OR FLATTER	14 DAYS	7 DAYS FOR SLOPES GREATER THAN 50' IN LENGTH.
ALL OTHER AREAS WITH SLOPES FLATTER THAN 4:1	14 DAYS	NONE, EXCEPT FOR PERIMETERS AND HQW ZONES.

HNTB NORTH CAROLINA, P.C.
343 E. Six Forks Road, Suite 200
Raleigh, North Carolina 27609
NC License No: C-1554

PROJECT REFERENCE NO.	SHEET NO.
U-5319	EC-4/CONST.4
R/W SHEET NO.	
ROADWAY DESIGN ENGINEER	HYDRAULICS ENGINEER

NOTE:
PLACE TEMPORARY ROCK SEDIMENT DAMS TYPE – B AND TEMPORARY ROCK SILT CHECKS TYPE – A AT DRAINAGE OUTLETS.

NOTE:
PERIMETER EROSION CONTROL MEASURES SHALL BE INSTALLED DURING CLEARING AND GRUBBING PHASE.



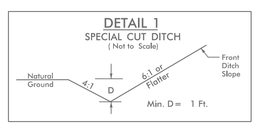

FROM STA. -Y- 93+50 TO 96+00 RT.
FROM STA. -Y- 98+00 TO 98+50 LT.

FOR -Y- INTERSECTION DETAIL, SEE SHEET 2B-1
FOR -L- PROFILE, SEE SHEET 8
FOR -Y- PROFILE, SEE SHEET 9

5/14/99
12/14/2017
::\Design\U-5319_EC_PSH04.dgn
HNTB

5/14/99

NOTE:
PLACE TEMPORARY ROCK SEDIMENT DAMS TYPE – B AND TEMPORARY ROCK SILT CHECKS TYPE – A AT DRAINAGE OUTLETS.

NOTE:
PERIMETER EROSION CONTROL MEASURES SHALL BE INSTALLED DURING CLEARING AND GRUBBING PHASE.

HNTB NORTH CAROLINA, P.C.
343 E. Six Forks Road, Suite 200
Raleigh, North Carolina 27609
NC License No: C-1554

PROJECT REFERENCE NO.	SHEET NO.
U-5319	EC-5/CONST.5
R/W SHEET NO.	
ROADWAY DESIGN ENGINEER	HYDRAULICS ENGINEER

NAD 83/2007

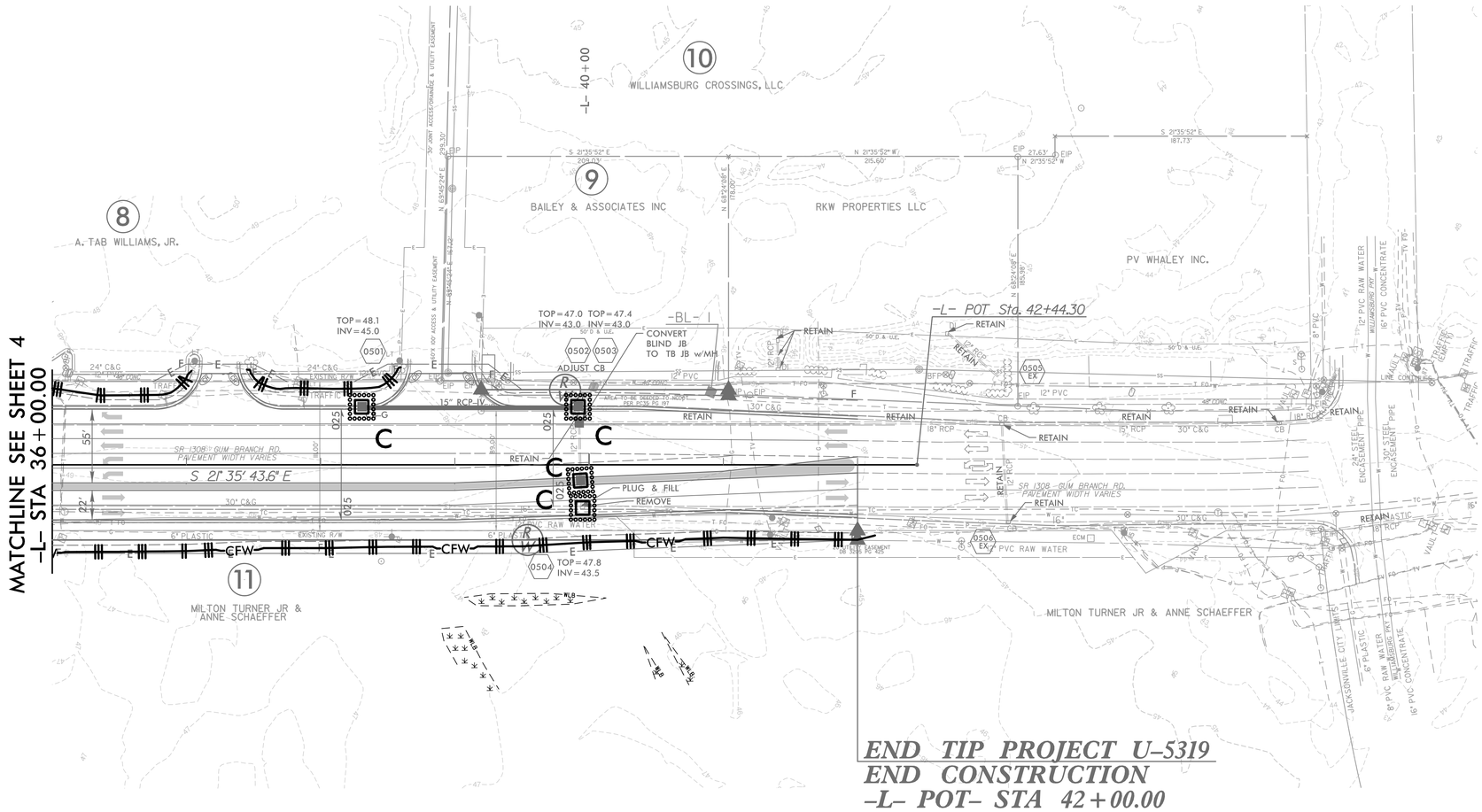

FOR –L– PROFILE, SEE SHEET 8

12/14/2017
C:\Design\U-5319_EC_PSH05.dgn
HNTB

5/14/99

NOTE:
PERIMETER EROSION CONTROL MEASURES SHALL BE INSTALLED DURING CLEARING AND GRUBBING PHASE.

NOTE:
PLACE TEMPORARY ROCK SEDIMENT DAMS TYPE – B AND TEMPORARY ROCK SILT CHECKS TYPE – A AT DRAINAGE OUTLETS.

HNTB NORTH CAROLINA, P.C.
343 E. Six Forks Road, Suite 200
Raleigh, North Carolina 27609
NC License No: C-1554

PROJECT REFERENCE NO.	SHEET NO.
U-5319	EC-6/CONST.6
R/W SHEET NO.	
ROADWAY DESIGN ENGINEER	HYDRAULICS ENGINEER

–Y–	–YXO–			
PI Sta 88+21.77	PI Sta 10+45.66	PI Sta 11+47.32	PI Sta 12+67.71	PI Sta 13+69.03
Δ = 34° 33' 02.5" (RT)	Δ = 2° 45' 58.8" (RT)	Δ = 24° 08' 21.6" (LT)	Δ = 31° 00' 40.1" (RT)	Δ = 2° 16' 03.0" (RT)
D = 2° 58' 35.1"	D = 3° 01' 47.7"	D = 21° 52' 07.0"	D = 24° 04' 25.9"	D = 2° 56' 34.0"
L = 1,160.82'	L = 91.30'	L = 110.38'	L = 128.82'	L = 77.05'
T = 598.66'	T = 45.66'	T = 56.02'	T = 66.03'	T = 38.53'
R = 1,925.00'	R = 1,891.00'	R = 262.00'	R = 238.00'	R = 1,947.00'
Se = 6%	Se = 2.5%	Se = 2.5%	Se = 2.5%	Se = 2.5%
V = 50mph	V = 30mph	V = 30mph	V = 30mph	V = 30mph

1.5 inch Skimmer with 1.375 inch Orifice Diameter 10 ft. weir with 4.5 ft. weir height ID 6.1 (See Earthen Dam with Skimmer Detail)

–Y– 96+00

–YXO– PRC Sta. 12+01.68
–Y– POC Sta. 91+17.74 =
–YXO– POC Sta. 12+20.61

–YXO– PCC Sta. 13+30.50
–YXO– PT Sta. 14+07.55 =
–Y– POC Sta. 93+00.00 LT
–Y– PT Sta. 93+83.93

–Y– 95+00

SIDEWALK TO REMAIN IN PLACE

NAD 83/2007

BEGIN CONSTRUCTION
–Y– STA 89+90.00

–YXO– PC Sta. 10+00.00 =
–Y– POC Sta. 89+00.00 RT

SPEC. CUT DITCH SEE DETAIL 1 S=4.1% DDE=35 CY

SPEC. CUT DITCH SEE DETAIL 3

CLASS "B" RIP-RAP EST. 2 TONS EST. 7 SYGF

REMOVE HW COLLAR & EXTEND 18" RCP-IV

2" PLASTIC CFW

REMOVE

SPEC. CUT DITCH SEE DETAIL 1

GPS SRI308-2

N 78° 53' 41.4" E

SR 2071 WESTERN BLVD 30' BST

MATCHLINE SEE SHEET 4
–Y– STA 98+00.00

–YXO– PRC Sta. 10+91.30

1.5 inch Skimmer with 1.375 inch Orifice Diameter 8 ft. weir with 3.0 ft. weir height ID 6.2 (See Earthen Dam with Skimmer Detail)

SPEC. CUT DITCH SEE DETAIL 2

SPEC. CUT DITCH SEE DETAIL 1

SIDEWALK TO REMAIN IN PLACE

DETAIL 1
SPECIAL CUT DITCH
(Not to Scale)

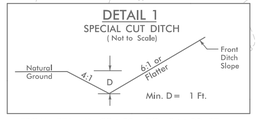

FROM STA. –Y– 93+50 TO 96+00 RT.
FROM STA. –Y– 97+25 TO 98+50 LT.

DETAIL 2
SPECIAL CUT DITCH
(Not to Scale)

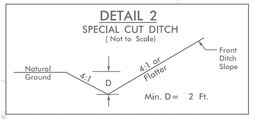

FROM STA. –Y– 92+00 TO 93+50 RT.

DETAIL 3
SPECIAL CUT DITCH
(Not to Scale)

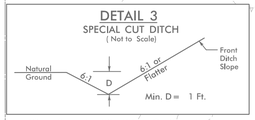

FROM STA. –Y– 90+22 TO 91+50 LT.

FOR –Y– PROFILE, SEE SHEET 9
FOR –YXO– PROFILE, SEE SHEET 10

12/14/2017
...\Design\U-5319_EC_PSH06.dgn
HNTB

5/14/99

NOTE:
PERIMETER EROSION CONTROL MEASURES SHALL BE INSTALLED DURING CLEARING AND GRUBBING PHASE.

NOTE:
PLACE TEMPORARY ROCK SEDIMENT DAMS TYPE – B AND TEMPORARY ROCK SILT CHECKS TYPE – A AT DRAINAGE OUTLETS.

HNTB NORTH CAROLINA, P.C.
343 E. Six Forks Road, Suite 200
Raleigh, North Carolina 27609
NC License No: C-1554

PROJECT REFERENCE NO.	SHEET NO.
U-5319	EC-7/CONST.7
R/W SHEET NO.	
ROADWAY DESIGN ENGINEER	HYDRAULICS ENGINEER

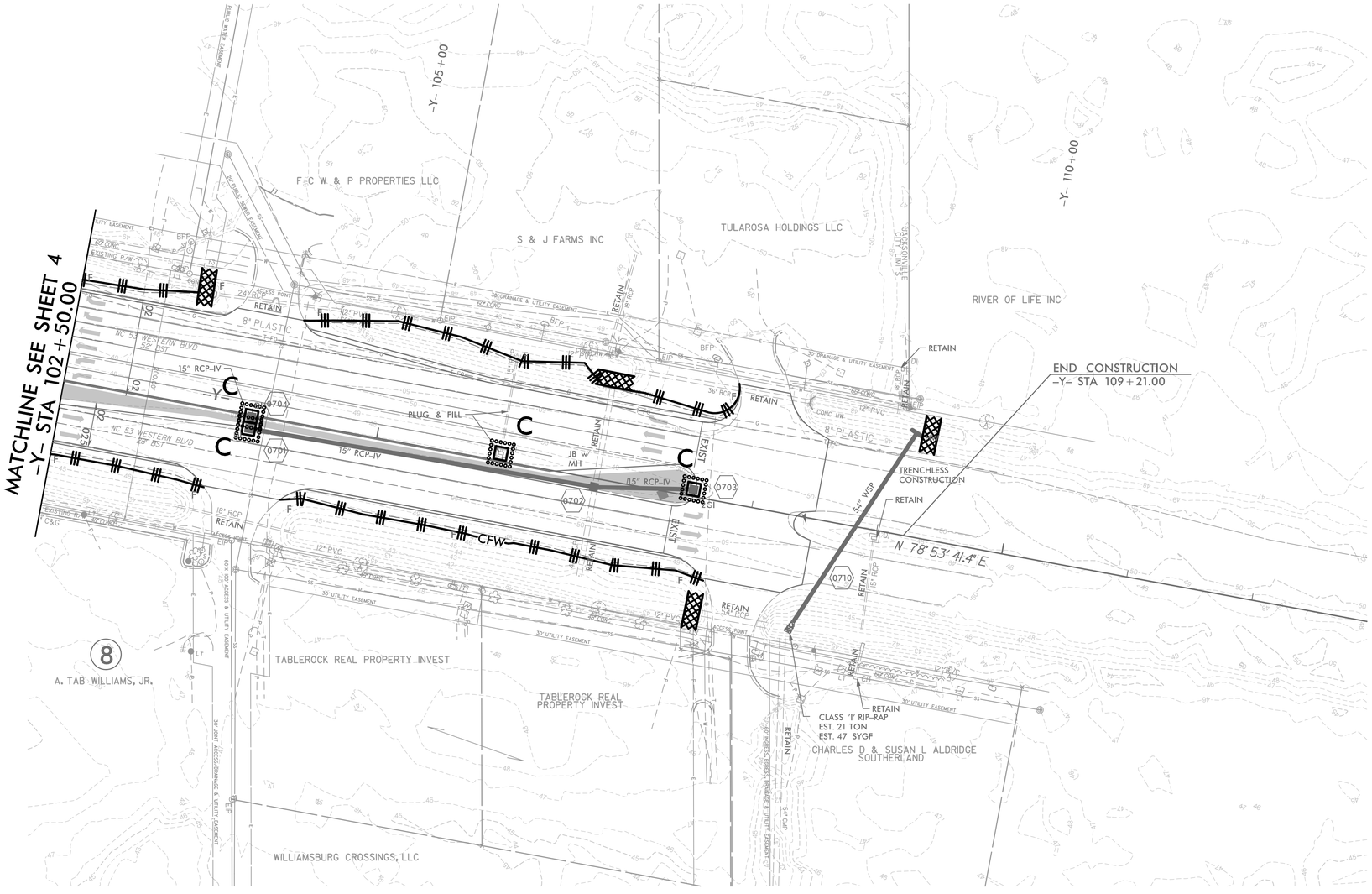

FOR -Y- PROFILE, SEE SHEET 9

12/4/2017
...\Design\U-5319_EC_PSH07.dgn
HNTB

DocuSign Envelope ID: FF88F91E-0B21-4E7C-9148-75799C00FCC5

T.I.P.: U-5319

CONTRACT: DC00184

STATE OF NORTH CAROLINA
DEPARTMENT OF TRANSPORTATION

TIP NO.	SHEET NO.
U-5319	SIGN-1

APPROVED: DocuSigned by: Andrew D Klinksiek E3D78FBA5996E44B...

DATE: 4/11/2018

SEAL

NORTH CAROLINA PROFESSIONAL SEAL 40311 ENGINEER ANDREW D. KLINKSIEK

DOCUMENT NOT CONSIDERED FINAL UNLESS ALL SIGNATURES COMPLETED

SIGNING PLAN
ONSLOW COUNTY

LOCATION: INTERSECTION OF SR 1308 (GUM BRANCH RD) AND NC 53 (WESTERN BLVD)

ROADWAY STANDARD DRAWING

THE FOLLOWING ROADWAY STANDARDS AS APPEAR IN "ROADWAY STANDARD DRAWINGS" - PROJECT SERVICES UNIT - N.C. DEPARTMENT OF TRANSPORTATION - RALEIGH, N.C., DATED JANUARY 2018 ARE APPLICABLE TO THIS PROJECT AND BY REFERENCE HEREBY ARE CONSIDERED A PART OF THESE PLANS:

STD. NO.	TITLE
901.70	SIGN STRINGERS AND SUPPORT SPACING
904.10	ORIENTATION OF GROUND MOUNTED SIGNS
904.50	MOUNTING OF TYPE 'D', 'E' AND 'F' SIGNS ON 'U' CHANNEL POSTS
910.30	SIGNING SIGNALIZED AND UNSIGNALIZED SUPERSTREET

PAY ITEM NOTES

1 SIGN ERECTION, TYPE E OR F
2 SIGN ERECTION, RELOCATE SIGN TYPE D (GROUND MOUNTED)
3 DISPOSAL OF SIGN SYSTEM, U-CHANNEL
4 DISPOSAL OF SUPPORT, U-CHANNEL

GENERAL NOTES

. SIGNS FURNISHED BY STATE.

. CONFIRM IN WRITING AT LEAST 4 MONTHS IN ADVANCE, THE ACTUAL DATE THE DEPARTMENT FURNISHED SIGNS WILL BE REQUIRED.

. ALL PROPOSED SIGNS SEE PAY ITEM NOTE 1 UNLSEE OTHERWISE NOTED.

. IF REMOVAL OR RELOCATION OF SIGNS ON PRIVATE STREET (NON-STATE MAINTAINED) IS REQUIRED DUE TO CONSTRUCTION, THE CONTRACTOR SHALL INFORM THE ENGINEER. THE WORK WILL BE COMPLETED BY OTHERS.

. WHEN NOT STATIONED OR DIMENSIONED ON PLANS, ALL TYPE E AND F SIGNS SHALL BE FIELD LOCATED BY THE ENGINEER.

. ALL EXISTING SIGNS ON "U" CHANNEL POST WITHIN THE PROJECT LIMITS SHALL BE REMOVED AND DISPOSED OF (SEE PAY ITEM NOTE 3) UNLESS OTHERWISE NOTED ON PLANS.

. WHEN EXISTING SIGNS ARE REMOVED AND INSTALLED ON NEW SUPPORTS, THE RE-ERECTION SHALL IMMEDIATELY FOLLOW THE REMOVAL.

. THE BACKGROUND FOR TYPE E AND F SIGNS SHALL BE GRADE C REFLECTIVE SHEETING UNLESS OTHERWISE NOTED.

. SEE ROADWAY PLANS FOR GUARD/GUIDE RAIL DETAILS.

SUMMARY OF QUANTITIES

ITEM NO.		ITEM DESCRIPTION	QUANTITY	UNIT
DESC. NO.	SECT. NO.			
4072000000	903	SUPPORTS, 3 LB STEEL U-CHANNEL	1094	L.F.
4102000000	904	SIGN ERECTION, TYPE E	82	EA.
4108000000	904	SIGN ERECTION, TYPE F	2	EA.
4116100000	904	SIGN ERECTION, RELOCATE SIGN TYPE D (GROUND MOUNTED)	2	EA.
4155000000	907	DISPOSAL OF SIGN SYSTEM, U-CHANNEL	29	EA.
4192000000	907	DISPOSAL OF SUPPORT, U-CHANNEL	1	EA.

PLANS SUBMITTED TO:

A.ALQUDWAH, PE — SIGNING & DELINEATION REGIONAL ENGINEER

JESSI LEONARD, PE — DIVISION 3 - DIVISION TRAFFIC ENGINEER

STATE OF NORTH CAROLINA DEPARTMENT OF TRANSPORTATION

PLANS PREPARED BY: HNTB NORTH CAROLINA, P.C.

C.A. JOHNSON, III, PE — SIGNING PROJECT MANAGER

A.D. KLINKSIEK, PE, PTOE — SIGNING PROJECT ENGINEER

J.T. THIBAULT, EI — SIGNING DESIGN ENGINEER

HNTB

HNTB NORTH CAROLINA, P.C.
343 E. Six Forks Road, Suite 200
Raleigh, North Carolina 27609
NC License No: C-1554
(919) 546-8997

INDEX

SHEET NO.	DESCRIPTION
SIGN-1	TITLE SHEET
SIGN-2	TYPE E AND F SHEET
SIGN-3-6	SIGNING PLAN SHEETS

DocuSign Envelope ID: FF88F91E-0B21-4E7C-9148-75799C00FCC5

(401) QUANTITY REQ'D 4



24″ X 36″
R3-9b

ONE "U" POST PER SIGN

(406) QUANTITY REQ'D 11



24″ X 30″
R4-7(R)

ONE "U" POST PER SIGN

(411) QUANTITY REQ'D 3

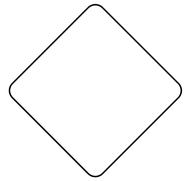

18″ X 18″
OM1-3

MOUNTED BELOW SIGN 406
IN 3 INSTALLATIONS

(416) QUANTITY REQ'D 1



18″ X 18″
W13-1P

MOUNTED BELOW SIGN 415
IN 1 INSTALLATION

(501)

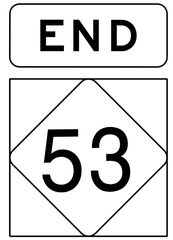

1-24″ X 12″

1-24″ X 24″

ONE "U" POST PER SIGN

TIP NO.	SHEET NO.
U-5319	SIGN-2

APPROVED: DocuSigned by: Andrew D Klinksiek E3D78FB4596E44B...

DATE: 4/11/2018

SEAL

NORTH CAROLINA PROFESSIONAL SEAL 40311 ENGINEER ANDREW D. KLINKSIEK

DOCUMENT NOT CONSIDERED FINAL UNLESS ALL SIGNATURES COMPLETED

(402) QUANTITY REQ'D 8

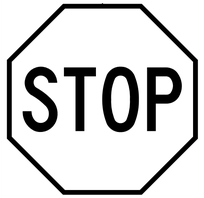

36″ X 36″
R1-1

ONE "U" POST PER SIGN
MOUNTED BELOW SIGN 403
IN 5 INSTALLATIONS

(407) QUANTITY REQ'D 2



36″ X 36″
R3-7(R)

ONE "U" POST PER SIGN

(412) QUANTITY REQ'D 1



30″ X 36″
R2-1

ONE "U" POST PER SIGN

(417) QUANTITY REQ'D 1



30″ X 36″
R2-1

ONE "U" POST PER SIGN

(502)



1-24″ X 12″

1-24″ X 12″

1-24″ X 24″

ONE "U" POST PER SIGN

(403) QUANTITY REQ'D 5



54″ X 18″
R6-1(R)

TWO "U" POSTS PER SIGN

(408) QUANTITY REQ'D 20



36″ X 24″
R5-1a

ONE "U" POST PER SIGN

(413) QUANTITY REQ'D 2



30″ X 12″
R3-9cP

MOUNTED ABOVE SIGN 401
IN 2 INSTALLATIONS

(418) QUANTITY REQ'D 1



36″ X 36″
W6-1

ONE "U" POST PER SIGN

(404) QUANTITY REQ'D 1



30″ X 36″
R2-1

ONE "U" POST PER SIGN

(409) QUANTITY REQ'D 14



36″ X 36″
R5-1

ONE "U" POST PER SIGN

(414) QUANTITY REQ'D 2



XX″ X XX″
R2-1

MOUNTED ABOVE SIGN 401
IN 2 INSTALLATIONS

(419) QUANTITY REQ'D 1

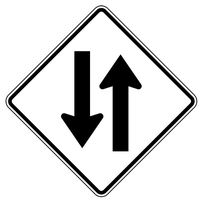

36″ X 36″
W6-3

ONE "U" POST PER SIGN

(405) QUANTITY REQ'D 3

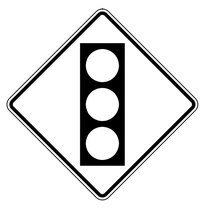

30″ X 30″
W3-3

ONE "U" POST PER SIGN

(410) QUANTITY REQ'D 1



54″ X 18″
R6-1(L)

TWO "U" POSTS PER SIGN

(415) QUANTITY REQ'D 1



36″ X 36″
W6-2

ONE "U" POST PER SIGN

HNTB NORTH CAROLINA, P.C.
343 E. Six Forks Road, Suite 200
Raleigh, North Carolina 27609
NC License No: C-1554
(919) 546-8997

TYPE E AND F SIGNS

DocuSign Envelope ID: FF88F91E-0B21-4E7C-9148-75799C00FCC5

TIP NO.	SHEET NO.
U-5319	SIGN-3

APPROVED: DocuSigned by: Andrew D Klinksiek E3D78FBA5596E44B...

DATE: 4/11/2018

SEAL

NORTH CAROLINA PROFESSIONAL SEAL 40311 ENGINEER ANDREW D. KLINKSIEK

DOCUMENT NOT CONSIDERED FINAL UNLESS ALL SIGNATURES COMPLETED

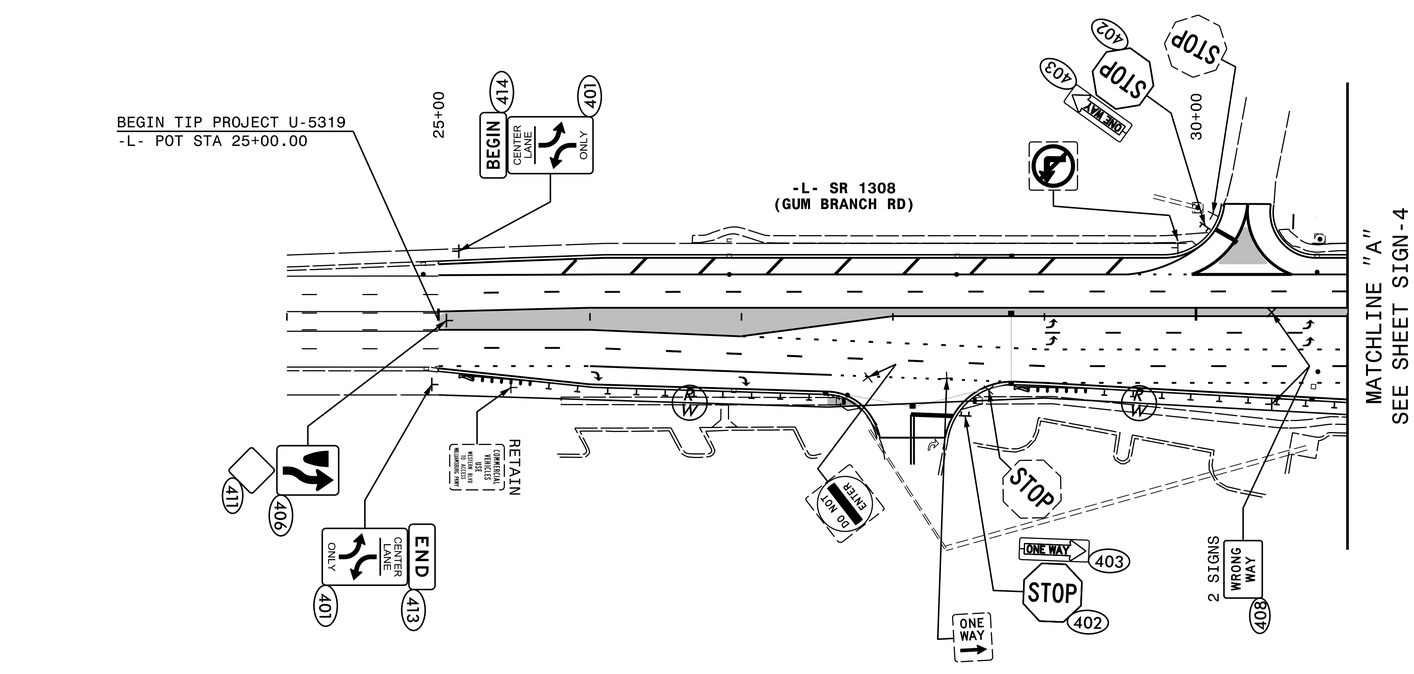

HNTB NORTH CAROLINA, P.C.
343 E. Six Forks Road, Suite 200
Raleigh, North Carolina 27609
NC License No: C-1554
(919) 546-8997

EXISTING AND PROPOSED SIGNS -L- STA. 24+00 TO 31+00

DocuSign Envelope ID: FF88F91E-0B21-4E7C-9148-75799C00FCC5

TIP NO.	SHEET NO.
U-5319	SIGN-4

APPROVED: DocuSigned by: Andrew D Klinksiek E3D78FBA5596E44B...

DATE: 4/11/2018

SEAL

NORTH CAROLINA PROFESSIONAL SEAL 40311 ENGINEER ANDREW D. KLINKSIEK

DOCUMENT NOT CONSIDERED FINAL UNLESS ALL SIGNATURES COMPLETED

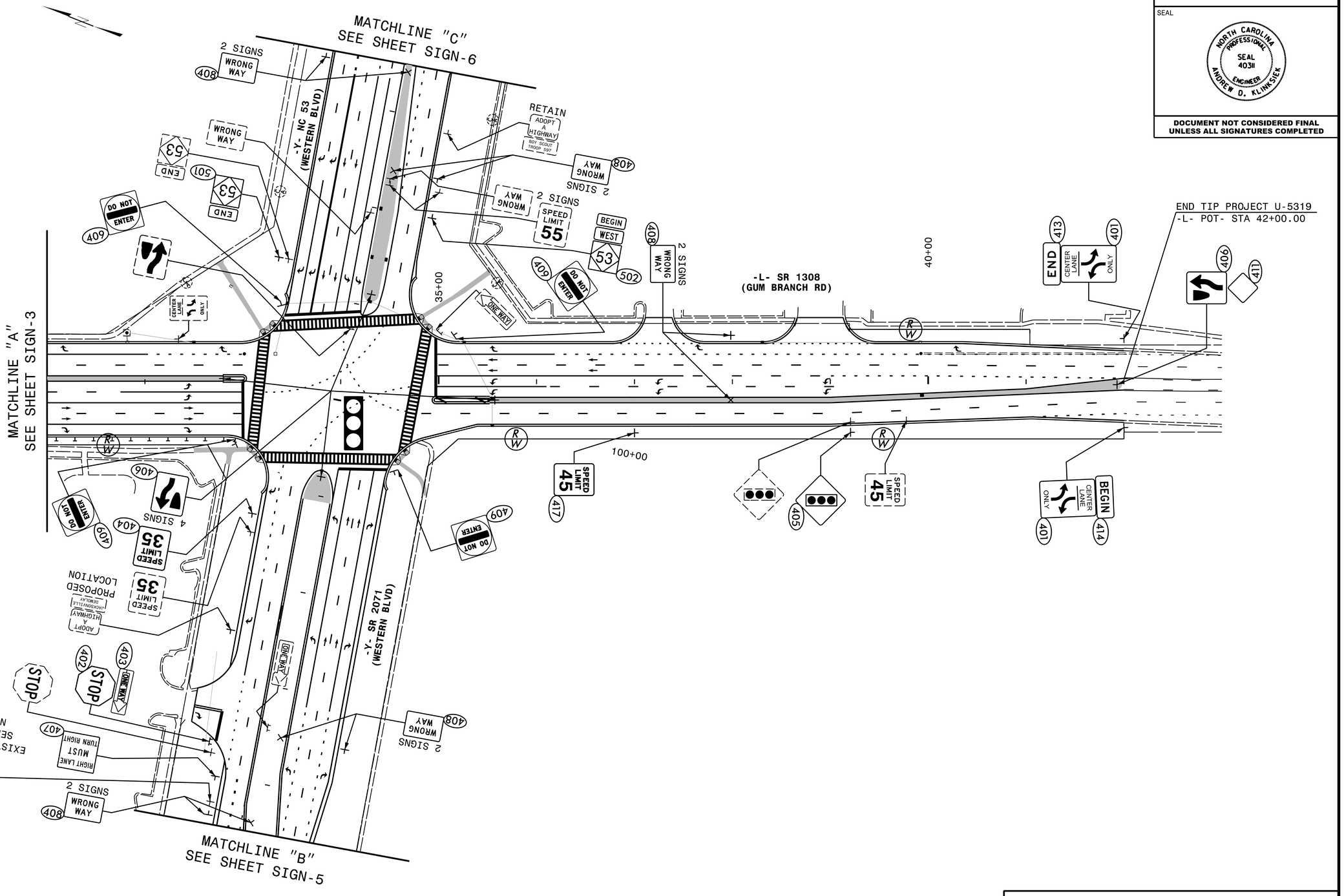

HNTB NORTH CAROLINA, P.C.
343 E. Six Forks Road, Suite 200
Raleigh, North Carolina 27609
NC License No: C-1554
(919) 546-8997

EXISTING AND PROPOSED SIGNS
-L- STA. 31+00 TO 42+00
-Y- STA. 95+50 TO 103+50

DocuSign Envelope ID: FF88F91E-0B21-4E7C-9148-75799C00FCC5

TIP NO.	SHEET NO.
U-5319	SIGN-5

APPROVED: DocuSigned by: Andrew D Klinksiek E3D78FB4596E44B...

DATE: 4/11/2018

SEAL

NORTH CAROLINA PROFESSIONAL SEAL 40311 ENGINEER ANDREW D. KLINKSIEK

DOCUMENT NOT CONSIDERED FINAL UNLESS ALL SIGNATURES COMPLETED

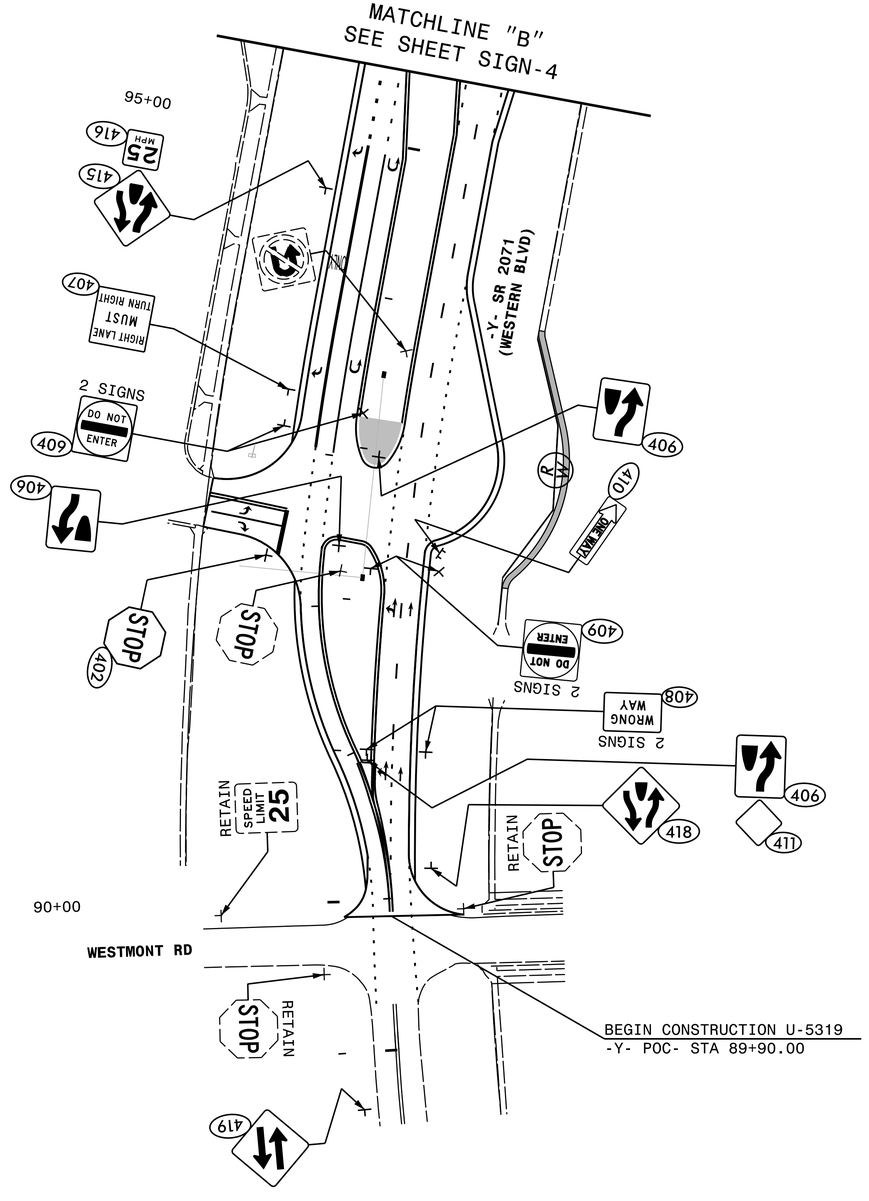

HNTB NORTH CAROLINA, P.C.
343 E. Six Forks Road, Suite 200
Raleigh, North Carolina 27609
NC License No: C-1554
(919) 546-8997

EXISTING AND PROPOSED SIGNS -Y- STA. 88+50 TO 95+50

DocuSign Envelope ID: FF88F91E-0B21-4E7C-9148-75799C00FCC5

TIP NO.	SHEET NO.
U-5319	SIGN-6

APPROVED: DocuSigned by: Andrew D Klinksiek E3D78FBA5596E44B...

DATE: 4/11/2018

SEAL

NORTH CAROLINA PROFESSIONAL SEAL 40311 ENGINEER ANDREW D. KLINKSIEK

DOCUMENT NOT CONSIDERED FINAL UNLESS ALL SIGNATURES COMPLETED

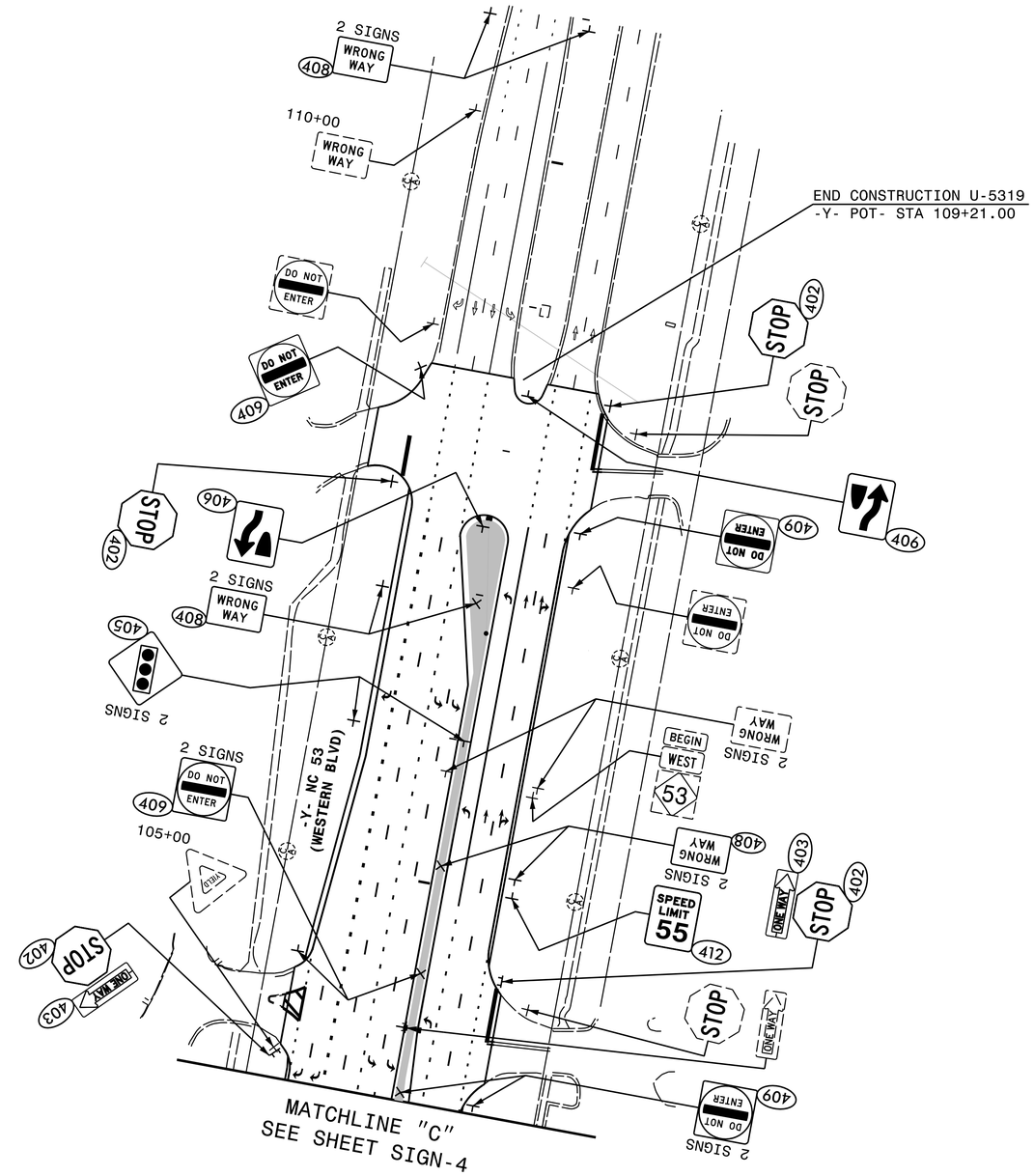

HNTB NORTH CAROLINA, P.C.
343 E. Six Forks Road, Suite 200
Raleigh, North Carolina 27609
NC License No: C-1554
(919) 546-8997

EXISTING AND PROPOSED SIGNS -Y- STA. 103+50 TO 111+00

DocuSign Envelope ID: A80F2234-B4CF-4A7A-8A1D-E9CAA5762171

Project No.	Sheet No.
U-5319	Sig. 1.0

STATE OF NORTH CAROLINA
DIVISION OF HIGHWAYS

ONSLOW COUNTY

LOCATION: INTERSECTION OF SR 1308 (GUM BRANCH ROAD) AND NC 53 (WESTERN BOULEVARD)

TYPE OF WORK: SIGNALS AND CABLE ROUTING

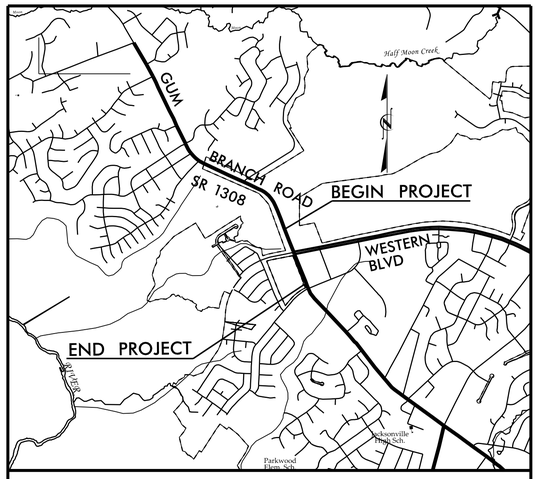

VICINITY MAP

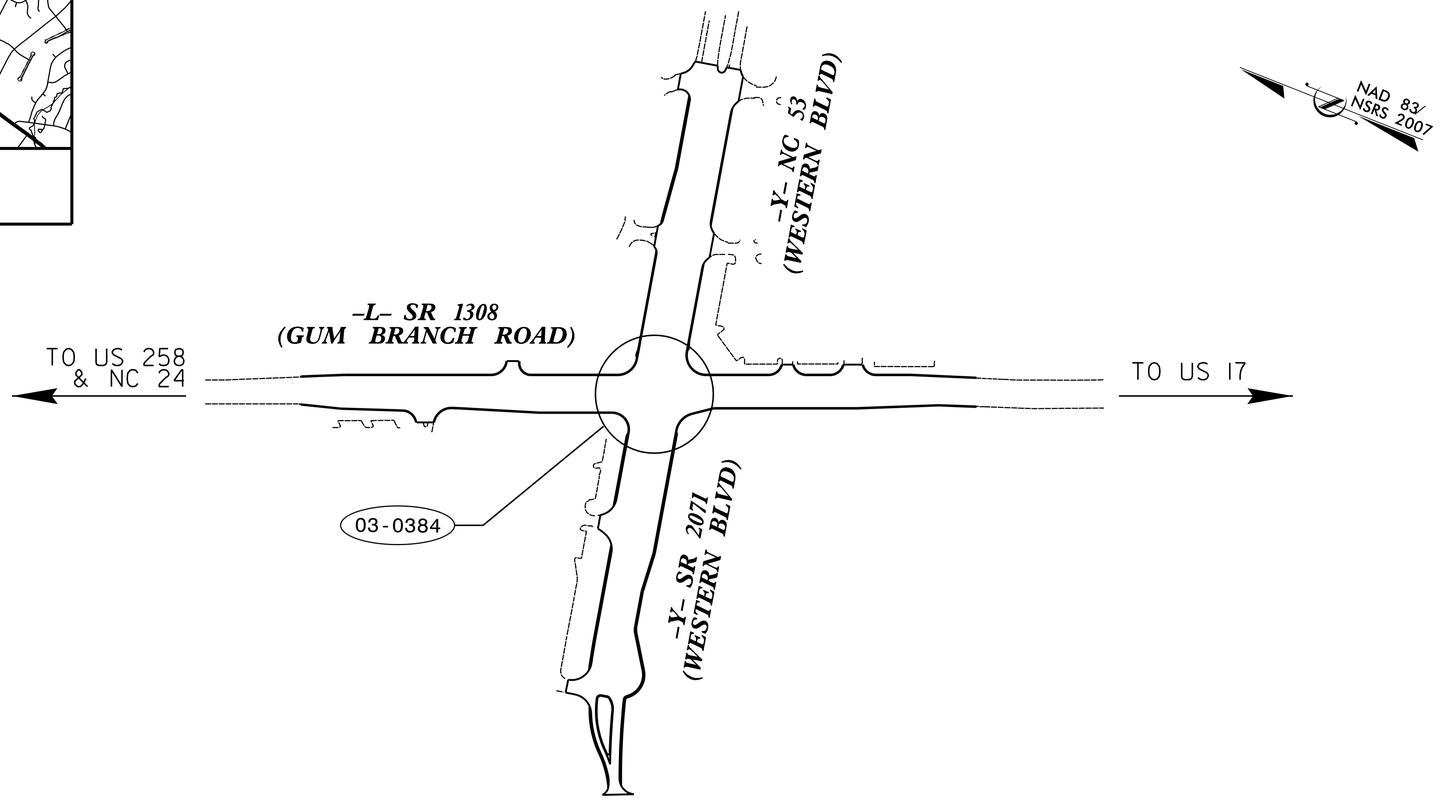

TIP PROJECT: U-5319

CONTRACT: DC00184

PLANS PREPARED BY:

HNTB NORTH CAROLINA, P.C.
343 E. Six Forks Road, Suite 200
Raleigh, North Carolina 27609
NC License No: C-1554
(919) 546-8997

James Byrd, PE – Project Manager

Natasha R. Simmons, PE, PTOE – Project Engineer

John A. Wagner, EI – Design Engineer

DOCUMENT NOT CONSIDERED FINAL UNLESS ALL SIGNATURES COMPLETED

Refer to "Roadway Standard Drawings NCDOT" dated January 2018 and "Standard Specifications for Roads and Structures" dated January 2018.

Index of Plans

Sheet #	Reference #	Location/Description
Sig. 1.0	--------	Title Sheet
Sig. 2.0-3.4	03-0384	SR 1308 (Gum Branch Road) at NC 53 /SR 2071 (Western Blvd)
Sig. M1-M8	--------	Standard Drawing for Metal Poles
SCP. 1-4		Signal Communication Plans

LEGEND

##-#### SIGNAL INVENTORY NUMBER

NCDOT – DIVISION 3

Contacts:

Jessi Leonard, PE – Divison Traffic Engineer

R. Coke Gray III, PE – Regional Traffic Engineer

SEAL

NORTH CAROLINA PROFESSIONAL SEAL 031464 ENGINEER NATASHA R. SIMMONS

DocuSigned by: Natasha R. Simmons 4/11/2018

SIGNATURE DATE

Prepared for the Office of:
DIVISION OF HIGHWAYS
TRANSPORTATION MOBILITY AND SAFETY DIVISION

Transportation Mobility and Safety Division · STATE OF NORTH CAROLINA · DEPARTMENT OF TRANSPORTATION · ITS and Signals Unit

750 N. Greenfield Parkway, Garner, NC 27529

4/11/2018
\ustn\U5319_sig_tsh.dgn
HNTB

DocuSign Envelope ID: EE8B0D1E-264F-449B-BB76-7167AD3CFCB5

PROJECT REFERENCE NO.	SHEET NO.
U-5319	Sig. 2.0

6 Phase
Fully Actuated w/EV Preempt
Jacksonville Signal System

DEFAULT PHASING DIAGRAM

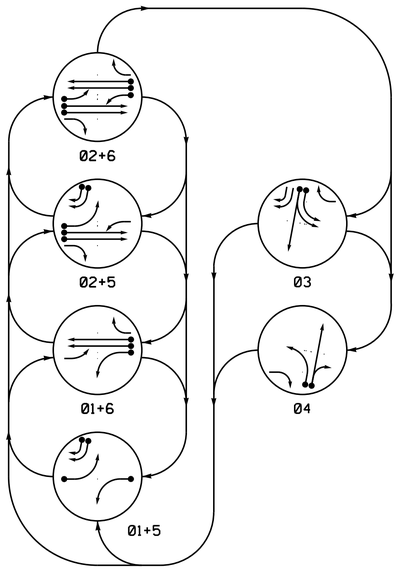

DEFAULT EV PREEMPT PHASES

(Medium Priority)

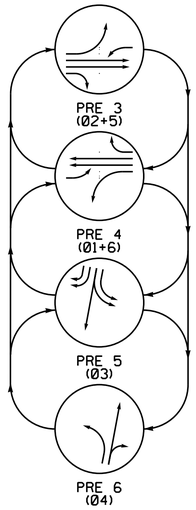

SIGNAL FACE I.D.

All Heads L.E.D.

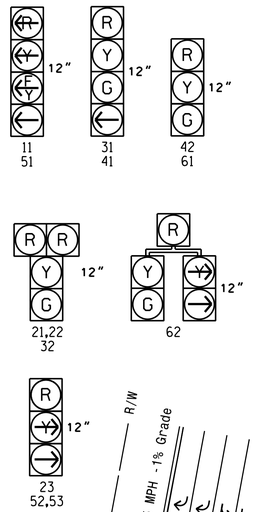

DEFAULT PHASING TABLE OF OPERATION

SIGNAL FACE	PHASE 01+5	01+6	02+5	02+6	03	04	EVP 3	EVP 4	EVP 5	EVP 6	FLASH
11	←̶	←̶	F Y	F Y	R̶	R̶	F Y	←̶	R̶	R̶	Y̶
21,22	R	R	G	G	R	R	G	R	R	R	Y
23	R	R	→̶	→̶	R	→̶	→̶	R	R	R	Y̶
31	R	R	R	R	G	R	R	R	G	R	R
32	R	R	R	R	G	R	R	R	G	R	R
41	R	R	R	R	G	R	R	R	G	R	R
42	R	R	R	R	G	R	R	R	G	R	R
51	←̶	F Y	←̶	F Y	R̶	R̶	←̶	F Y	R̶	R̶	Y̶
52,53	→̶	R	→̶	R	→̶	R	R	R	→̶	R	R
61	R	G	R	G	R	R	G	R	R	R	Y
62	R	G	R	G	R	R	G	R	R	R	Y

OASIS 2070L LOOP & DETECTOR INSTALLATION CHART

INDUCTIVE LOOPS					DETECTOR PROGRAMMING							
LOOP	SIZE (FT)	DISTANCE FROM STOPBAR (FT)	TURNS	NEW LOOP	PHASE	CALLING	EXTENSION	FULL TIME DELAY	STRETCH TIME	DELAY TIME	SYSTEM LOOP	NEW CARD
1A	6X40	0	2-4-2	-	1	Y	Y	-	-	15*	-	-
					6**	Y	Y	Y	-	3	-	-
2A	6X6	300	6	Y	2	Y	Y	-	-	-	-	-
2B	6X6	300	6	Y	2	Y	Y	-	-	-	-	-
3A	6X40	0	2-4-2	Y	3	Y	Y	-	-	-	-	-
3B	6X40	0	2-4-2	Y	3	Y	Y	-	-	-	-	-
4A	6X40	0	2-4-2	Y	4	Y	Y	-	-	-	-	-
4B	6X40	0	2-4-2	Y	4	Y	Y	-	-	10	-	-
5A	6X40	0	2-4-2	Y	5	Y	Y	-	-	15*	-	-
					2**	Y	Y	Y	-	3	-	-
5B	6X40	0	2-4-2	Y	5	Y	Y	-	-	15	-	-
5C	6X40	0	2-4-2	Y	5	Y	Y	-	-	15	-	-
6A	6X6	280	5	-	6	Y	Y	-	-	-	-	-
6B	6X6	280	5	-	6	Y	Y	-	-	-	-	-
S15	6X6	+230	5	Y	-	-	-	-	-	-	Y	-
S16	6X6	+230	5	Y	-	-	-	-	-	-	Y	-

*Reduce delay to 3 seconds during Alternate Phasing operation.

**Disable phases 2 and 6 during Alternate Phasing operation.

NOTES

1. Refer to "Roadway Standard Drawings NCDOT" dated January 2018 and "Standard Specifications for Roads and Structures" dated January 2018.
2. Do not program signal for late night flashing operation unless otherwise directed by the Engineer.
3. Phase 1 and/or phase 5 may be lagged.
4. The order of phase 3 and phase 4 may be reversed.
5. Set all detector units to presence mode.
6. This intersection features an optical preemption system. Shown locations of optical detectors are conceptual only.
7. The City Traffic Engineer will determine the hours of use for each phasing plan.
8. Maximum times shown in timing chart are for free-run operation only. Coordinated signal system timing values supersede these values.
9. Closed loop system data: Controller Asset #0384.

PHASING DIAGRAM DETECTION LEGEND

- DETECTED MOVEMENT
- UNDETECTED MOVEMENT (OVERLAP)
- UNSIGNALIZED MOVEMENT
- PEDESTRIAN MOVEMENT

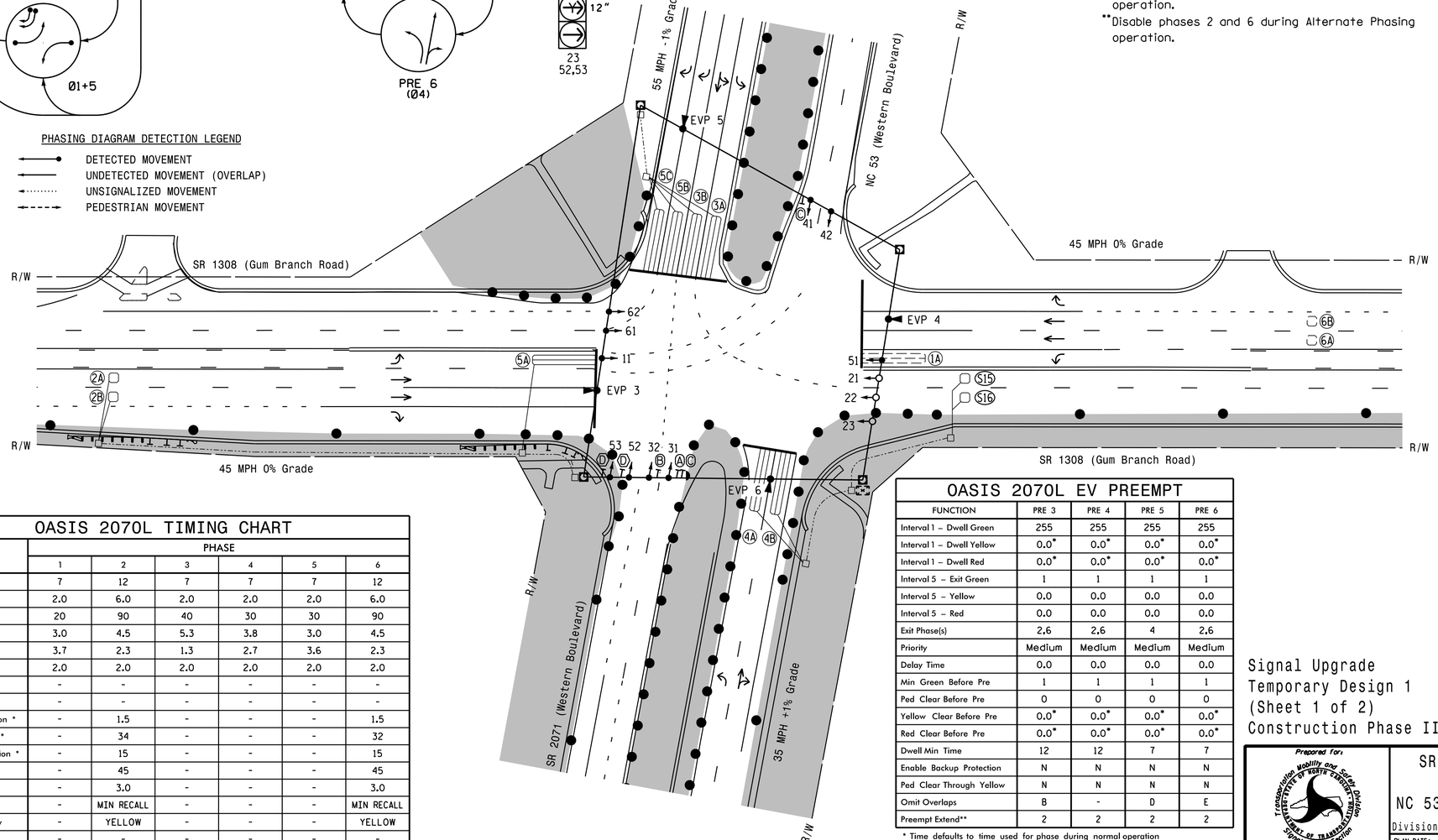

OASIS 2070L TIMING CHART

FEATURE	PHASE 1	2	3	4	5	6
Min Green 1 *	7	12	7	7	7	12
Extension 1 *	2.0	6.0	2.0	2.0	2.0	6.0
Max Green 1 *	20	90	40	30	30	90
Yellow Clearance	3.0	4.5	5.3	3.8	3.0	4.5
Red Clearance	3.7	2.3	1.3	2.7	3.6	2.3
Red Revert	2.0	2.0	2.0	2.0	2.0	2.0
Walk 1 *	-	-	-	-	-	-
Don't Walk 1	-	-	-	-	-	-
Seconds Per Actuation *	-	1.5	-	-	-	1.5
Max Variable Initial *	-	34	-	-	-	32
Time Before Reduction *	-	15	-	-	-	15
Time To Reduce *	-	45	-	-	-	45
Minimum Gap	-	3.0	-	-	-	3.0
Recall Mode	-	MIN RECALL	-	-	-	MIN RECALL
Vehicle Call Memory	-	YELLOW	-	-	-	YELLOW
Dual Entry	-	-	-	-	-	-
Simultaneous Gap	ON	ON	ON	ON	ON	ON

* These values may be field adjusted. Do not adjust Min Green and Extension times for phases 2 and 6 lower than what is shown. Min Green for all other phases should not be lower than 4 seconds.

OASIS 2070L EV PREEMPT

FUNCTION	PRE 3	PRE 4	PRE 5	PRE 6
Interval 1 – Dwell Green	255	255	255	255
Interval 1 – Dwell Yellow	0.0*	0.0*	0.0*	0.0*
Interval 1 – Dwell Red	0.0*	0.0*	0.0*	0.0*
Interval 5 – Exit Green	1	1	1	1
Interval 5 – Yellow	0.0	0.0	0.0	0.0
Interval 5 – Red	0.0	0.0	0.0	0.0
Exit Phase(s)	2,6	2,6	4	2,6
Priority	Medium	Medium	Medium	Medium
Delay Time	0.0	0.0	0.0	0.0
Min Green Before Pre	1	1	1	1
Ped Clear Before Pre	0	0	0	0
Yellow Clear Before Pre	0.0*	0.0*	0.0*	0.0*
Red Clear Before Pre	0.0*	0.0*	0.0*	0.0*
Dwell Min Time	12	12	7	7
Enable Backup Protection	N	N	N	N
Ped Clear Through Yellow	N	N	N	N
Omit Overlaps	B	-	D	E
Preempt Extend**	2	2	2	2

* Time defaults to time used for phase during normal operation
** Program Timing on Optical Detection Unit

LEGEND

PROPOSED		EXISTING
	Traffic Signal Head	
	Modified Signal Head	N/A
	Sign	
	Pedestrian Signal Head With Push Button & Sign	
	Signal Pole with Guy	
	Signal Pole with Sidewalk Guy	
	Inductive Loop Detector	
	Controller & Cabinet	
	Junction Box	
	2-in Underground Conduit	
N/A	Right of Way	
	Directional Arrow	
	Optical Detector	
	Metal Strain Pole	
	Construction Zone Drums	
	Construction Zone	
Ⓐ	Left Arrow "ONLY" Sign (R3-5L)	Ⓐ
Ⓑ	Combined Through and Left Arrow Sign (R3-6L)	Ⓑ
Ⓒ	"U-TURN YIELD TO RIGHT TURN" Sign (R10-16)	Ⓒ
Ⓓ	Right Arrow "ONLY" Sign (R3-5R)	Ⓓ

Signal Upgrade
Temporary Design 1
(Sheet 1 of 2)
Construction Phase II

DOCUMENT NOT CONSIDERED FINAL UNLESS ALL SIGNATURES COMPLETED

Prepared for: Transportation Mobility and Safety Division, NORTH CAROLINA DEPARTMENT OF TRANSPORTATION, Signal Design Section
750 N.Greenfield Pkwy,Garner,NC 27529

SR 1308 (Gum Branch Road) at NC 53 / SR 2071 (Western Blvd)

Division 03 Onslow County Jacksonville

PLAN DATE: November 2017 REVIEWED BY: T.R. Terrell

PREPARED BY: J.A. Wagner REVIEWED BY: N.R. Simmons

SCALE 0 40 1"=40'

REVISIONS | INIT. | DATE

SEAL
NORTH CAROLINA PROFESSIONAL SEAL 031464 ENGINEER NATASHA R. SIMMONS
DocuSigned by: Natasha R Simmons
F0DA8BE5A04A4A...
4/11/2018
SIGNATURE DATE

SIG. INVENTORY NO. 03-0384T1

HNTB NORTH CAROLINA, P.C.
343 E. Six Forks Road, Suite 200
Raleigh, North Carolina 27609
NC License No: C-1554
(919) 546-8997

DocuSign Envelope ID: EE8B0D1E-264F-449B-BB76-7167AD3CFCB5

PROJECT REFERENCE NO.	SHEET NO.
U-5319	Sig. 2.1

6 Phase
Fully Actuated w/EV Preempt
Jacksonville Signal System

NOTES

1. Refer to "Roadway Standard Drawings NCDOT" dated January 2018 and "Standard Specifications for Roads and Structures" dated January 2018.
2. Do not program signal for late night flashing operation unless otherwise directed by the Engineer.
3. Phase 1 and/or phase 5 may be lagged.
4. The order of phase 3 and phase 4 may be reversed.
5. Set all detector units to presence mode.
6. This intersection features an optical preemption system. Shown locations of optical detectors are conceptual only.
7. The City Traffic Engineer will determine the hours of use for each phasing plan.
8. Maximum times shown in timing chart are for free-run operation only. Coordinated signal system timing values supersede these values.
9. Closed loop system data: Controller Asset #0384.

ALTERNATE PHASING DIAGRAM

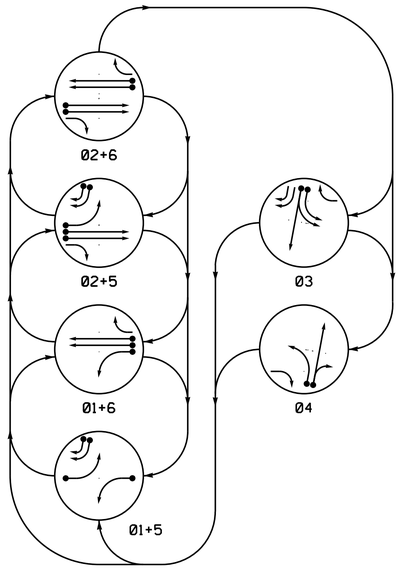

ALTERNATE EV PREEMPT PHASES

(Medium Priority)

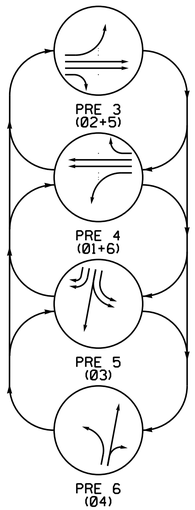

PHASING DIAGRAM DETECTION LEGEND

- DETECTED MOVEMENT
- UNDETECTED MOVEMENT (OVERLAP)
- UNSIGNALIZED MOVEMENT
- PEDESTRIAN MOVEMENT

ALTERNATE PHASING TABLE OF OPERATION

SIGNAL FACE	PHASE										
	Ø1+5	Ø1+6	Ø2+5	Ø2+6	Ø3	Ø4	EVP 3	EVP 4	EVP 5	EVP 6	FLASH
11	←—	←—	~~R~~	~~R~~	~~R~~	~~R~~	~~R~~	←—	~~R~~	~~R~~	~~Y~~
21,22	R	R	G	G	R	R	G	R	R	R	Y
23	R	R	→—	→—	R	→—	→—	R	R	R	~~Y~~
31	R	R	R	R	G	R	R	R	G	R	R
32	R	R	R	R	G	R	R	R	G	R	R
41	R	R	R	R	R	G	R	R	R	G	R
42	R	R	R	R	R	G	R	R	R	G	R
51	←—	~~R~~	←—	~~R~~	~~R~~	~~R~~	←—	~~R~~	~~R~~	~~R~~	~~Y~~
52,53	→—	R	→—	R	→—	R	R	R	→—	R	R
61	R	G	R	G	R	R	R	G	R	R	Y
62	R	G	R	G	R	R	R	G	R	R	Y

SIGNAL FACE I.D.

All Heads L.E.D.

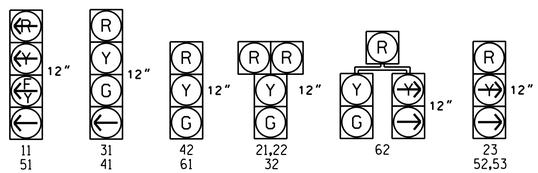

LEGEND

PROPOSED		EXISTING
○→	Traffic Signal Head	●→
◐→	Modified Signal Head	N/A
⊣	Sign	⊣
	Pedestrian Signal Head With Push Button & Sign	
	Signal Pole with Guy	
	Signal Pole with Sidewalk Guy	
	Inductive Loop Detector	
	Controller & Cabinet	
□	Junction Box	■
	2-in Underground Conduit	
N/A	Right of Way	
→	Directional Arrow	→
	Optical Detector	
	Metal Strain Pole	
	Construction Zone Drums	
	Construction Zone	
Ⓐ	Left Arrow "ONLY" Sign (R3-5L)	Ⓐ
Ⓑ	Combined Through and Left Arrow Sign (R3-6L)	Ⓑ
Ⓒ	"U-TURN YIELD TO RIGHT TURN" Sign (R10-16)	Ⓒ
Ⓓ	Right Arrow "ONLY" Sign (R3-5R)	Ⓓ

Signal Upgrade
Temporary Design 1
(Sheet 2 of 2)
Construction Phase II

DOCUMENT NOT CONSIDERED FINAL UNLESS ALL SIGNATURES COMPLETED

Prepared for: Transportation Mobility and Safety Division, North Carolina Department of Transportation, Signal Design Section
1750 N.Greenfield Pkwy.Garner,NC 27529

SR 1308 (Gum Branch Road)
at
NC 53 / SR 2071 (Western Blvd)

Division 03 Onslow County Jacksonville

PLAN DATE: November 2017 REVIEWED BY: T.R. Terrell
PREPARED BY: J.A. Wagner REVIEWED BY: N.R. Simmons

SCALE: NONE

REVISIONS	INIT.	DATE

SEAL
NORTH CAROLINA PROFESSIONAL SEAL 031464 ENGINEER NATASHA R. SIMMONS
DocuSigned by: Natasha R. Simmons
SIGNATURE 4/11/2018 DATE

SIG. INVENTORY NO. 03-0384T1

DocuSign Envelope ID: EE8B0D1E-264F-449B-BB76-7167AD3CFCB5

PROJECT REFERENCE NO.	SHEET NO.
U-5319	Sig. 2.2

EDI MODEL 2010ECL-NC CONFLICT MONITOR PROGRAMMING DETAIL

(remove jumpers and set switches as shown)

REMOVE DIODE JUMPERS 1-5, 1-6, 1-9, 1-10, 1-11, 2-5, 2-6, 2-7, 2-9, 2-10, 2-11, 3-10, 3-12, 4-7, 5-7, 5-9, 5-10, 5-11, 6-7, 6-9, 6-11, 7-9, 7-10, 7-11, 9-10, 9-11, 10-11, and 10-12.

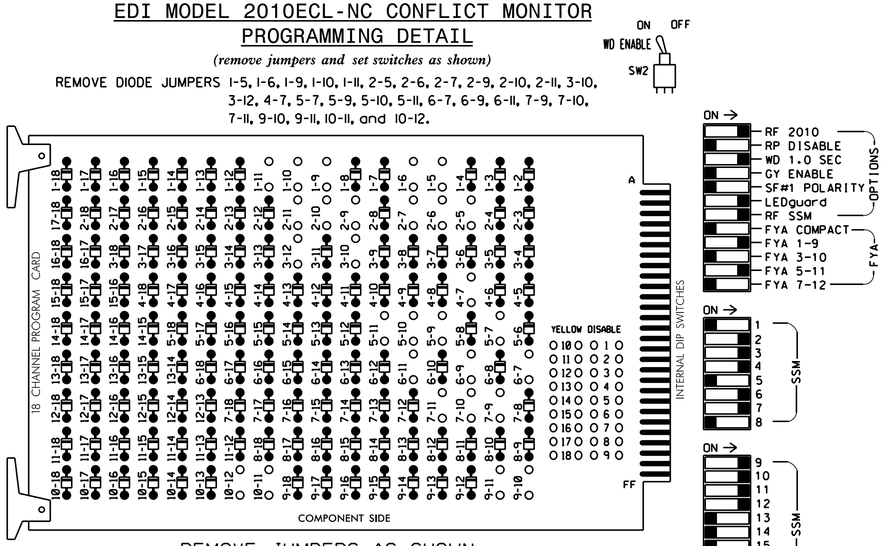

REMOVE JUMPERS AS SHOWN

NOTES:

1. Card is provided with all diode jumpers in place. Removal of any jumper allows its channels to run concurrently.
2. Ensure jumpers SEL2-SEL5 are present on the monitor board.

■ = DENOTES POSITION OF SWITCH

NOTES

1. To prevent "flash-conflict" problems, insert red flash program blocks for all unused vehicle load switches in the output file. The installer shall verify that signal heads flash in accordance with the Signal Plans.
2. Enable Simultaneous Gap-Out for all Phases.
3. Program phases 2 and 6 for Variable Initial and Gap Reduction.
4. Program phases 2 and 6 for Start Up In Green.
5. Program phases 2 and 6 for Yellow Flash, and overlaps 1 and 2 as Wag Overlaps.
6. The cabinet and controller are part of the Jacksonville Signal System.

EQUIPMENT INFORMATION

CONTROLLER.....EXISTING 2070L
CABINET.....EXISTING 332 W/AUX
SOFTWARE.....ECONOLITE OASIS
CABINET MOUNT.....BASE
OUTPUT FILE POSITIONS...18 WITH AUX. OUTPUT FILE
LOAD SWITCHES USED.....S1,S2,S4,S5,S7,S8,S10, AUX S1,AUX S2,AUX S4,AUX S5
PHASES USED.....1,2,3,4,5,6
OVERLAP "A".....1+2
OVERLAP "B".....3+5
OVERLAP "C".....5+6
OVERLAP "D".....3
OVERLAP "E".....2+4

SIGNAL HEAD HOOK-UP CHART

LOAD SWITCH NO.	S1	S2	S3	S4		S5		S6	S7	S8	S9	S10	S11	S12	AUX S1	AUX S2	AUX S3	AUX S4	AUX S5	AUX S6
CMU CHANNEL NO.	1	2	13	3		4		14	5	6	15	7	8	16	9	10	17	11	12	18
PHASE	1	2	2 PED	3		4		4 PED	5	6	6 PED	OLE	8	8 PED	OLA	OLB	SPARE	OLC	OLD	SPARE
SIGNAL HEAD NO.	11★	21,22	NU	31	32	41	42	NU	51★	61,62	NU	23	NU	NU	11★	52,53	NU	51★	62	NU
RED		128		116	116	101	101			134		122				A124			✱	
YELLOW	✱	129		117	117	102	102		✱	135										
GREEN		130		118	118	103	103			136										
RED ARROW															A121			A114		
YELLOW ARROW												123			A122	A125		A115	A102	
FLASHING YELLOW ARROW															A123			A116		
GREEN ARROW	127			118		103			133			124				A126			A103	
✋																				
🚶																				

NU = Not Used

✱ Denotes install load resistor. See load resistor installation detail this sheet.

★ See pictorial of head wiring in detail below.

4 SECTION FYA PPLT SIGNAL WIRING DETAIL

(wire signal heads as shown)

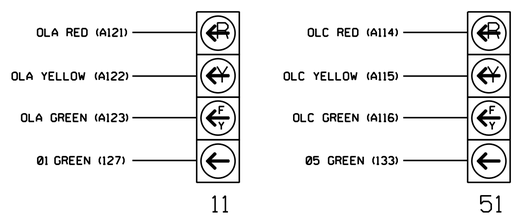

NOTE

1. The sequence display for signal heads 11 and 51 requires special logic programming. See sheet 2 of 6 for programming instructions.

INPUT FILE POSITION LAYOUT

(front view)

		1	2	3	4	5	6	7	8	9	10	11	12	13	14
FILE "I"	U	Ø1 1A	Ø2 2A	Ø3 3A	WIRED INPUT ⊗	SLOT EMPTY	Ø4 4A	SLOT EMPTY	SLOT EMPTY	SYS. DET. S15	SLOT EMPTY	SLOT EMPTY	SLOT EMPTY	SLOT EMPTY	FS DC ISOLATOR
	L	NOT USED	Ø2 2B	Ø3 3B			Ø4 4B			SYS. DET. S16					ST DC ISOLATOR
FILE "J"	U	Ø5 5A	Ø6 6A	SLOT EMPTY	WIRED INPUT ⊗	SLOT EMPTY	Ø5 5B	SLOT EMPTY	SLOT EMPTY	SLOT EMPTY	SLOT EMPTY	SLOT EMPTY	SLOT EMPTY	CH. C PRE-3 / CH. A PRE-4	SLOT EMPTY
	L	NOT USED	Ø6 6B				Ø5 5C							CH. D PRE-5 / CH. B PRE-6	

EX.: 1A, 2A, ETC. = LOOP NO.'S

⊗ Wired Input - Do not populate slot with detector card

FS = FLASH SENSE
ST = STOP TIME
PRE = PREEMPT

4 CHANNEL OPTICOM OSP CARD INSERT CARD INTO SLOT J13

INPUT FILE CONNECTION & PROGRAMMING CHART

LOOP NO.	LOOP TERMINAL	INPUT FILE POS.	PIN NO.	INPUT ASSIGNMENT NO.	DETECTOR NO.	NEMA PHASE	CALL	EXTEND	FULL TIME DELAY	STRETCH TIME	DELAY TIME
1A[1]	TB2-1,2	I1U	56	18	1	1	Y	Y			15
	-	J4U	48	10★	26	6	Y	Y	Y		3
	-	I1U	56	18★	51	1	Y	Y			3
2A	TB2-5,6	I2U	39	1	2	2	Y	Y			
2B	TB2-7,8	I2L	43	5	12	2	Y	Y			
3A	TB2-9,10	I3U	63	25	32	3	Y	Y			
3B	TB2-11,12	I3L	76	38	42	3	Y	Y			
4A	TB4-9,10	I6U	41	3	4	4	Y	Y			
4B	TB4-11,12	I6L	45	7	14	4	Y	Y			10
5A[2]	TB3-1,2	J1U	55	17	5	5	Y	Y			15
	-	I4U	47	9★	22	2	Y	Y	Y		3
	-	J1U	55	17★	55	5	Y	Y			3
5B	TB5-9,10	J6U	42	4	8	5	Y	Y			15
5C	TB5-11,12	J6L	46	8	18	5	Y	Y			15
6A	TB3-5,6	J2U	40	2	6	6	Y	Y			
6B	TB3-7,8	J2L	44	6	16	6	Y	Y			
✱S15	TB6-9,10	I9U	60	22	11	SYS					
✱S16	TB6-11,12	I9L	62	24	13	SYS					

✱ System detector only. Remove the vehicle phase assigned to this detector in the default programming.

[1] Add jumper from I1-W to J4-W, on rear of input file.

[2] Add jumper from J1-W to I4-W, on rear of input file.

★ See Input Page Assignment programming details on sheets 4 and 5.

INPUT FILE POSITION LEGEND: J2L
FILE J
SLOT 2
LOWER

TYPICAL OPTICOM FIELD WIRE DETAIL

(input file, rear view)

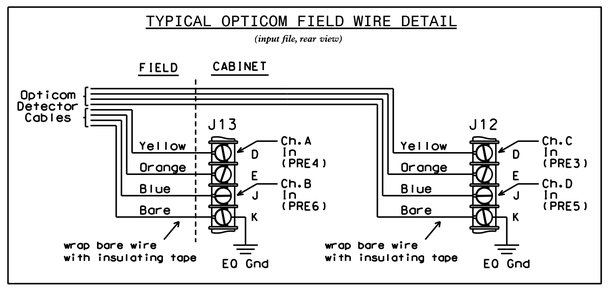

LOAD RESISTOR INSTALLATION DETAIL

(install resistors as shown below)

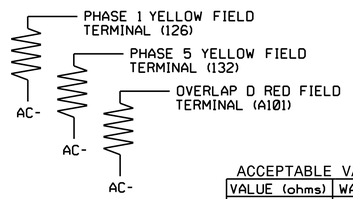

ACCEPTABLE VALUES	
VALUE (ohms)	WATTAGE
1.5K - 1.9K	25W (min)
2.0K - 3.0K	10W (min)

Signal Upgrade
Temporary Design 1 (Sheet 1 of 6)
Construction Phase II

DOCUMENT NOT CONSIDERED FINAL UNLESS ALL SIGNATURES COMPLETED

THIS ELECTRICAL DETAIL IS FOR THE SIGNAL DESIGN: 03-0384T1
DESIGNED: NOVEMBER 2017
SEALED: 4-11-18
REVISED: N/A

HNTB NORTH CAROLINA, P.C.
343 E. Six Forks Road, Suite 200
Raleigh, North Carolina 27609
NC License No: C-1554
(919) 546-8997

ELECTRICAL AND PROGRAMMING DETAILS FOR:

Prepared for: Transportation Mobility and Safety Division, NORTH CAROLINA DEPARTMENT OF TRANSPORTATION, Signals Management Section

750 N.Greenfield Pkwy.Garner,NC 27529

SR 1308 (Gum Branch Road)
at
NC 53 / SR 2071 (Western Blvd)

Division 03 | Onslow Co. | Jacksonville

PLAN DATE:	November 2017	REVIEWED BY:	T.R. Terrell
PREPARED BY:	J.A. Wagner	REVIEWED BY:	N.R. Simmons

REVISIONS	INIT.	DATE

SEAL
NORTH CAROLINA PROFESSIONAL SEAL 031464 ENGINEER NATASHA R. SIMMONS

DocuSigned by: Natasha R. Simmons 7AD4B0F9A0464A...
4/11/2018
SIGNATURE | DATE

SIG. INVENTORY NO. 03-0384T1

DocuSign Envelope ID: EE8B0D1E-264F-449B-BB76-7167AD3CFCB5

PROJECT REFERENCE NO.	SHEET NO.
U-5319	Sig. 2.3

OVERLAP PROGRAMMING DETAIL FOR DEFAULT PHASING

(program controller as shown below)

FROM MAIN MENU PRESS '8' (OVERLAPS), THEN '1' (VEHICLE OVERLAP SETTINGS).

```
 PAGE 1: VEHICLE OVERLAP 'A' SETTINGS
 PHASE:          :1234567891011121314151 6
VEH OVL PARENTS::XX
VEH OVL NOT VEH::
VEH OVL NOT PED::
VEH OVL GRN EXT::
STARTUP COLOR: _ RED  _ YELLOW  _ GREEN
FLASH COLORS:  _ RED  _ YELLOW  X GREEN
SELECT VEHICLE OVERLAP OPTIONS:   (Y/N)
FLASH YELLOW IN CONTROLLER FLASH?...Y
GREEN EXTENSION (0-255 SEC).........0
YELLOW CLEAR (0=PARENT,3-25.5 SEC)..0.0
RED CLEAR (0=PARENT,0.1-25.5 SEC)...0.0
OUTPUT AS PHASE # (0=NONE, 1-16)....0
```

← NOTICE GREEN FLASH

PRESS '+'

```
 PAGE 1: VEHICLE OVERLAP 'B' SETTINGS
 PHASE:          :1234567891011121314151 6
VEH OVL PARENTS::  X X
VEH OVL NOT VEH::
VEH OVL NOT PED::
VEH OVL GRN EXT::
STARTUP COLOR: _ RED  _ YELLOW  _ GREEN
FLASH COLORS:  _ RED  _ YELLOW  _ GREEN
SELECT VEHICLE OVERLAP OPTIONS:   (Y/N)
FLASH YELLOW IN CONTROLLER FLASH?...N
GREEN EXTENSION (0-255 SEC).........0
YELLOW CLEAR (0=PARENT,3-25.5 SEC)..0.0
RED CLEAR (0=PARENT,0.1-25.5 SEC)...0.0
OUTPUT AS PHASE # (0=NONE, 1-16)....0
```

PRESS '+'

```
 PAGE 1: VEHICLE OVERLAP 'C' SETTINGS
 PHASE:          :1234567891011121314151 6
VEH OVL PARENTS::    XX
VEH OVL NOT VEH::
VEH OVL NOT PED::
VEH OVL GRN EXT::
STARTUP COLOR: _ RED  _ YELLOW  _ GREEN
FLASH COLORS:  _ RED  _ YELLOW  X GREEN
SELECT VEHICLE OVERLAP OPTIONS:   (Y/N)
FLASH YELLOW IN CONTROLLER FLASH?...Y
GREEN EXTENSION (0-255 SEC).........0
YELLOW CLEAR (0=PARENT,3-25.5 SEC)..0.0
RED CLEAR (0=PARENT,0.1-25.5 SEC)...0.0
OUTPUT AS PHASE # (0=NONE, 1-16)....0
```

← NOTICE GREEN FLASH

PRESS '+'

```
 PAGE 1: VEHICLE OVERLAP 'D' SETTINGS
 PHASE:          :1234567891011121314151 6
VEH OVL PARENTS::  X
VEH OVL NOT VEH::
VEH OVL NOT PED::
VEH OVL GRN EXT::
STARTUP COLOR: _ RED  _ YELLOW  _ GREEN
FLASH COLORS:  _ RED  _ YELLOW  _ GREEN
SELECT VEHICLE OVERLAP OPTIONS:   (Y/N)
FLASH YELLOW IN CONTROLLER FLASH?...N
GREEN EXTENSION (0-255 SEC).........0
YELLOW CLEAR (0=PARENT,3-25.5 SEC)..0.0
RED CLEAR (0=PARENT,0.1-25.5 SEC)...0.0
OUTPUT AS PHASE # (0=NONE, 1-16)....0
```

PRESS '+'

```
 PAGE 1: VEHICLE OVERLAP 'E' SETTINGS
 PHASE:          :1234567891011121314151 6
VEH OVL PARENTS:: X X
VEH OVL NOT VEH::
VEH OVL NOT PED::
VEH OVL GRN EXT::
STARTUP COLOR: _ RED  _ YELLOW  _ GREEN
FLASH COLORS:  _ RED  _ YELLOW  _ GREEN
SELECT VEHICLE OVERLAP OPTIONS:   (Y/N)
FLASH YELLOW IN CONTROLLER FLASH?...N
GREEN EXTENSION (0-255 SEC).........0
YELLOW CLEAR (0=PARENT,3-25.5 SEC)..0.0
RED CLEAR (0=PARENT,0.1-25.5 SEC)...0.0
OUTPUT AS PHASE # (0=NONE, 1-16)....7
```

OVERLAP PROGRAMMING COMPLETE

OVERLAP PROGRAMMING DETAIL FOR ALTERNATE PHASING

(program controller as shown below)

FROM MAIN MENU PRESS '8' (OVERLAPS), THEN '1' (VEHICLE OVERLAP SETTINGS). PRESS 'NEXT' TO ADVANCE TO PAGE 2.

NOTICE PAGE 2 →

```
 PAGE 2: VEHICLE OVERLAP 'A' SETTINGS
 PHASE:          :1234567891011121314151 6
VEH OVL PARENTS::X
VEH OVL NOT VEH::
VEH OVL NOT PED::
VEH OVL GRN EXT::
STARTUP COLOR: _ RED  _ YELLOW  _ GREEN
FLASH COLORS:  _ RED  _ YELLOW  _ GREEN
SELECT VEHICLE OVERLAP OPTIONS:   (Y/N)
FLASH YELLOW IN CONTROLLER FLASH?...Y
GREEN EXTENSION (0-255 SEC).........0
YELLOW CLEAR (0=PARENT,3-25.5 SEC)..0.0
RED CLEAR (0=PARENT,0.1-25.5 SEC)...0.0
OUTPUT AS PHASE # (0=NONE, 1-16)....0
```

PRESS '+'

NOTICE PAGE 2 →

```
 PAGE 2: VEHICLE OVERLAP 'B' SETTINGS
 PHASE:          :1234567891011121314151 6
VEH OVL PARENTS::  X X
VEH OVL NOT VEH::
VEH OVL NOT PED::
VEH OVL GRN EXT::
STARTUP COLOR: _ RED  _ YELLOW  _ GREEN
FLASH COLORS:  _ RED  _ YELLOW  _ GREEN
SELECT VEHICLE OVERLAP OPTIONS:   (Y/N)
FLASH YELLOW IN CONTROLLER FLASH?...N
GREEN EXTENSION (0-255 SEC).........0
YELLOW CLEAR (0=PARENT,3-25.5 SEC)..0.0
RED CLEAR (0=PARENT,0.1-25.5 SEC)...0.0
OUTPUT AS PHASE # (0=NONE, 1-16)....0
```

PRESS '+'

NOTICE PAGE 2 →

```
 PAGE 2: VEHICLE OVERLAP 'C' SETTINGS
 PHASE:          :1234567891011121314151 6
VEH OVL PARENTS::    X
VEH OVL NOT VEH::
VEH OVL NOT PED::
VEH OVL GRN EXT::
STARTUP COLOR: _ RED  _ YELLOW  _ GREEN
FLASH COLORS:  _ RED  _ YELLOW  _ GREEN
SELECT VEHICLE OVERLAP OPTIONS:   (Y/N)
FLASH YELLOW IN CONTROLLER FLASH?...Y
GREEN EXTENSION (0-255 SEC).........0
YELLOW CLEAR (0=PARENT,3-25.5 SEC)..0.0
RED CLEAR (0=PARENT,0.1-25.5 SEC)...0.0
OUTPUT AS PHASE # (0=NONE, 1-16)....0
```

PRESS '+'

NOTICE PAGE 2 →

```
 PAGE 2: VEHICLE OVERLAP 'D' SETTINGS
 PHASE:          :1234567891011121314151 6
VEH OVL PARENTS::  X
VEH OVL NOT VEH::
VEH OVL NOT PED::
VEH OVL GRN EXT::
STARTUP COLOR: _ RED  _ YELLOW  _ GREEN
FLASH COLORS:  _ RED  _ YELLOW  _ GREEN
SELECT VEHICLE OVERLAP OPTIONS:   (Y/N)
FLASH YELLOW IN CONTROLLER FLASH?...N
GREEN EXTENSION (0-255 SEC).........0
YELLOW CLEAR (0=PARENT,3-25.5 SEC)..0.0
RED CLEAR (0=PARENT,0.1-25.5 SEC)...0.0
OUTPUT AS PHASE # (0=NONE, 1-16)....0
```

PRESS '+'

NOTICE PAGE 2 →

```
 PAGE 2: VEHICLE OVERLAP 'E' SETTINGS
 PHASE:          :1234567891011121314151 6
VEH OVL PARENTS:: X X
VEH OVL NOT VEH::
VEH OVL NOT PED::
VEH OVL GRN EXT::
STARTUP COLOR: _ RED  _ YELLOW  _ GREEN
FLASH COLORS:  _ RED  _ YELLOW  _ GREEN
SELECT VEHICLE OVERLAP OPTIONS:   (Y/N)
FLASH YELLOW IN CONTROLLER FLASH?...N
GREEN EXTENSION (0-255 SEC).........0
YELLOW CLEAR (0=PARENT,3-25.5 SEC)..0.0
RED CLEAR (0=PARENT,0.1-25.5 SEC)...0.0
OUTPUT AS PHASE # (0=NONE, 1-16)....7
```

OVERLAP PROGRAMMING COMPLETE

LOGICAL I/O PROCESSOR PROGRAMMING DETAIL TO PRODUCE SPECIAL FYA-PPLT SIGNAL SEQUENCE

(program controller as shown below)

1. FROM MAIN MENU PRESS '2' (PHASE CONTROL), THEN '1' (PHASE CONTROL FUNCTIONS). SCROLL TO THE BOTTOM OF THE MENU AND ENABLE ACT LOGIC COMMANDS 1, 2, 3, 4, 5, AND 6.
2. FROM MAIN MENU PRESS '6' (OUTPUTS), THEN '3' (LOGICAL I/O PROCESSOR).

```
 LOGICAL I/O COMMAND #1  (+/-COMMAND#)
IF  ACTIVE PHASE       #1  IS ON
AND RED CLEAR ON PHASE #1  IS ON
        SCROLL DOWN
THEN:
SET OUTPUT  ASSIGNMENT #50 ON
SET OUTPUT  ASSIGNMENT #51 OFF
```

NOTE: LOGIC FOR PHASE 1 RED CLEAR WHEN TRANSITIONING FROM PHASE 1 TO PHASE 2 (HEAD 11).

PRESS '+'

```
 LOGICAL I/O COMMAND #2  (+/-COMMAND#)
IF  ACTIVE PHASE       #1  IS ON
        SCROLL DOWN
THEN:
SET OUTPUT  ASSIGNMENT #52 OFF
```

NOTE: LOGIC FOR SWITCHING FLASHING YELLOW ARROW "OFF" DURING PHASE 1 (HEAD 11).

PRESS '+'

```
 LOGICAL I/O COMMAND #3  (+/-COMMAND#)
IF  YELLOW ON PHASE    #1  IS ON
        SCROLL DOWN
THEN:
SET OUTPUT  ASSIGNMENT #51 ON
```

NOTE: LOGIC FOR YELLOW ARROW CLEARANCE FROM PHASE 1 (HEAD 11).

PRESS '+'

```
 LOGICAL I/O COMMAND #4  (+/-COMMAND#)
IF  ACTIVE PHASE       #5  IS ON
AND RED CLEAR ON PHASE #5  IS ON
        SCROLL DOWN
THEN:
SET OUTPUT  ASSIGNMENT #42 ON
SET OUTPUT  ASSIGNMENT #43 OFF
```

NOTE: LOGIC FOR PHASE 5 RED CLEAR WHEN TRANSITIONING FROM PHASE 5 TO PHASE 6 (HEAD 51).

PRESS '+'

```
 LOGICAL I/O COMMAND #5  (+/-COMMAND#)
IF  ACTIVE PHASE       #5  IS ON
        SCROLL DOWN
THEN:
SET OUTPUT  ASSIGNMENT #44 OFF
```

NOTE: LOGIC FOR SWITCHING FLASHING YELLOW ARROW "OFF" DURING PHASE 5 (HEAD 51).

PRESS '+'

```
 LOGICAL I/O COMMAND #6  (+/-COMMAND#)
IF  YELLOW ON PHASE    #5  IS ON
        SCROLL DOWN
THEN:
SET OUTPUT  ASSIGNMENT #43 ON
```

NOTE: LOGIC FOR YELLOW ARROW CLEARANCE FROM PHASE 5 (HEAD 51).

LOGIC I/O PROCESSOR PROGRAMMING COMPLETE

FLASHER CIRCUIT MODIFICATION DETAIL

In order to insure that signals flash concurrently on the same approach, make the following flasher circuit changes:

1. On rear of PDA - Remove wire from Term. T2-4 and Terminate on T2-2.
2. On rear of PDA - Remove wire from Term. T2-5 and Terminate on T2-3.
3. Remove Flasher Unit 2.

The changes listed above tie all Phases and Overlaps to Flasher Unit 1.

OUTPUT REFERENCE SCHEDULE

OUTPUT 42 = Overlap C Red
OUTPUT 43 = Overlap C Yellow
OUTPUT 44 = Overlap C Green
OUTPUT 50 = Overlap A Red
OUTPUT 51 = Overlap A Yellow
OUTPUT 52 = Overlap A Green

THIS ELECTRICAL DETAIL IS FOR THE SIGNAL DESIGN: 03-0384T1
DESIGNED: NOVEMBER 2017
SEALED: 4-11-18
REVISED: N/A

Signal Upgrade
Temporary Design 1 (Sheet 2 of 6)
Construction Phase II

DOCUMENT NOT CONSIDERED FINAL UNLESS ALL SIGNATURES COMPLETED

HNTB NORTH CAROLINA, P.C.
343 E. Six Forks Road, Suite 200
Raleigh, North Carolina 27609
NC License No: C-1554
(919) 546-8997

ELECTRICAL AND PROGRAMMING DETAILS FOR:

Prepared for:
Connecting Mobility and Safety Initiatives
DEPARTMENT OF TRANSPORTATION
Signals Management Section
750 N.Greenfield Pkwy.Garner,NC 27529

SR 1308 (Gum Branch Road)
at
NC 53 / SR 2071 (Western Blvd)

Division 03 | Onslow Co. | Jacksonville

PLAN DATE:	November 2017	REVIEWED BY:	T.R. Terrell
PREPARED BY:	J.A. Wagner	REVIEWED BY:	N.R. Simmons

REVISIONS	INIT.	DATE

SEAL
NORTH CAROLINA PROFESSIONAL SEAL 031464 ENGINEER NATASHA R. SIMMONS
DocuSigned by: Natasha R. Simmons
ENGINEER'S SIGNATURE 4/11/2018 DATE

SIG. INVENTORY NO. 03-0384T1

DocuSign Envelope ID: EE8B0D1E-264F-449B-BB76-7167AD3CFCB5

PROJECT REFERENCE NO.	SHEET NO.
U-5319	Sig. 2.4

EMERGENCY VEHICLE PREEMPTION PROGRAMMING DETAIL

(program controller as shown below)

From Main Menu press 'A' (Preemption), then '1' (Standard Preemptions). Press 'NEXT' as needed to advance to Preempts 3, 4, 5, and 6.

```
   PREEMPTION  #3  SETTINGS (NEXT:1-10)
INTERVAL/TIMING  |  CLEAR/DWELL PHASES
  GRN YEL  RED   |12345678910111213141516
1 255  0.0* 0.0* |  X   X
2   0  0.0  0.0  |
3   0  0.0  0.0  |
4   0  0.0  0.0  |
5   1  0.0  0.0  |  X    X
EXIT CALLS       |
          OPTIONS
PRIORITY (Y/N TO SELECT) ............MED
DELAY TIMER (0-255 SEC) .............0
MIN GREEN BEFORE PRE (0= DEFAULT)....1
PED CLEAR BEFORE PRE (0= DEFAULT)....0
YELLOW CLEAR BEFORE PRE (0= DEFAULT).0.0*
RED CLEAR BEFORE PRE (0= DEFAULT)....0.0*
DWELL MIN TIMER (0-255 SEC) .........12
DWELL MAX TIMER (0=OFF,1-255MIN) ....0
DWELL HOLD-OVER TIMER (0-255) .......0
LATCH CALL? .........................N
LINK TO NEXT PREEMPT? ...............N
ENABLE BACKUP PROTECTION? ...........N
HOLD CLEAR 1 PHASES DURING DELAY? ...N
FAST GREEN FLASH DWELL PHASES? ......N
PED CLEARANCE THROUGH YELLOW? .......N
INHIBIT OVERLAP GREEN EXTENSION? ....N
SERVICE DURING SOFTWARE FLASH? ......N
REST IN RED DURING DWELL INTERVAL? ..N
FLASH DWELL INTERVAL? ...............N
ALLOW PEDS IN DWELL INTERVAL? .......N
RE-TIME DWELL INTERVAL? .............N
OVERLAPS:            | ABCDEFGHIJKLMNOP
DWELL INT FLASH YELLOW |
OMIT OVERLAPS:       |  X
```

PRESS 'NEXT'

```
   PREEMPTION  #4  SETTINGS (NEXT:1-10)
INTERVAL/TIMING  |  CLEAR/DWELL PHASES
  GRN YEL  RED   |12345678910111213141516
1 255  0.0* 0.0* | X     X
2   0  0.0  0.0  |
3   0  0.0  0.0  |
4   0  0.0  0.0  |
5   1  0.0  0.0  |  X    X
EXIT CALLS       |
          OPTIONS
PRIORITY (Y/N TO SELECT) ............MED
DELAY TIMER (0-255 SEC) .............0
MIN GREEN BEFORE PRE (0= DEFAULT)....1
PED CLEAR BEFORE PRE (0= DEFAULT)....0
YELLOW CLEAR BEFORE PRE (0= DEFAULT).0.0*
RED CLEAR BEFORE PRE (0= DEFAULT)....0.0*
DWELL MIN TIMER (0-255 SEC) .........12
DWELL MAX TIMER (0=OFF,1-255MIN) ....0
DWELL HOLD-OVER TIMER (0-255) .......0
LATCH CALL? .........................N
LINK TO NEXT PREEMPT? ...............N
ENABLE BACKUP PROTECTION? ...........N
HOLD CLEAR 1 PHASES DURING DELAY? ...N
FAST GREEN FLASH DWELL PHASES? ......N
PED CLEARANCE THROUGH YELLOW? .......N
INHIBIT OVERLAP GREEN EXTENSION? ....N
SERVICE DURING SOFTWARE FLASH? ......N
REST IN RED DURING DWELL INTERVAL? ..N
FLASH DWELL INTERVAL? ...............N
ALLOW PEDS IN DWELL INTERVAL? .......N
RE-TIME DWELL INTERVAL? .............N
OVERLAPS:            | ABCDEFGHIJKLMNOP
DWELL INT FLASH YELLOW |
OMIT OVERLAPS:       |
```

PRESS 'NEXT'

```
   PREEMPTION  #5  SETTINGS (NEXT:1-10)
INTERVAL/TIMING  |  CLEAR/DWELL PHASES
  GRN YEL  RED   |12345678910111213141516
1 255  0.0* 0.0* |  X
2   0  0.0  0.0  |
3   0  0.0  0.0  |
4   0  0.0  0.0  |
5   1  0.0  0.0  |    X
EXIT CALLS       |
          OPTIONS
PRIORITY (Y/N TO SELECT) ............MED
DELAY TIMER (0-255 SEC) .............0
MIN GREEN BEFORE PRE (0= DEFAULT)....1
PED CLEAR BEFORE PRE (0= DEFAULT)....0
YELLOW CLEAR BEFORE PRE (0= DEFAULT).0.0*
RED CLEAR BEFORE PRE (0= DEFAULT)....0.0*
DWELL MIN TIMER (0-255 SEC) .........7
DWELL MAX TIMER (0=OFF,1-255MIN) ....0
DWELL HOLD-OVER TIMER (0-255) .......0
LATCH CALL? .........................N
LINK TO NEXT PREEMPT? ...............N
ENABLE BACKUP PROTECTION? ...........N
HOLD CLEAR 1 PHASES DURING DELAY? ...N
FAST GREEN FLASH DWELL PHASES? ......N
PED CLEARANCE THROUGH YELLOW? .......N
INHIBIT OVERLAP GREEN EXTENSION? ....N
SERVICE DURING SOFTWARE FLASH? ......N
REST IN RED DURING DWELL INTERVAL? ..N
FLASH DWELL INTERVAL? ...............N
ALLOW PEDS IN DWELL INTERVAL? .......N
RE-TIME DWELL INTERVAL? .............N
OVERLAPS:            | ABCDEFGHIJKLMNOP
DWELL INT FLASH YELLOW |
OMIT OVERLAPS:       |    X
```

PRESS 'NEXT'

```
   PREEMPTION  #6  SETTINGS (NEXT:1-10)
INTERVAL/TIMING  |  CLEAR/DWELL PHASES
  GRN YEL  RED   |12345678910111213141516
1 255  0.0* 0.0* |    X
2   0  0.0  0.0  |
3   0  0.0  0.0  |
4   0  0.0  0.0  |
5   1  0.0  0.0  |  X    X
EXIT CALLS       |
          OPTIONS
PRIORITY (Y/N TO SELECT) ............MED
DELAY TIMER (0-255 SEC) .............0
MIN GREEN BEFORE PRE (0= DEFAULT)....1
PED CLEAR BEFORE PRE (0= DEFAULT)....0
YELLOW CLEAR BEFORE PRE (0= DEFAULT).0.0*
RED CLEAR BEFORE PRE (0= DEFAULT)....0.0*
DWELL MIN TIMER (0-255 SEC) .........7
DWELL MAX TIMER (0=OFF,1-255MIN) ....0
DWELL HOLD-OVER TIMER (0-255) .......0
LATCH CALL? .........................N
LINK TO NEXT PREEMPT? ...............N
ENABLE BACKUP PROTECTION? ...........N
HOLD CLEAR 1 PHASES DURING DELAY? ...N
FAST GREEN FLASH DWELL PHASES? ......N
PED CLEARANCE THROUGH YELLOW? .......N
INHIBIT OVERLAP GREEN EXTENSION? ....N
SERVICE DURING SOFTWARE FLASH? ......N
REST IN RED DURING DWELL INTERVAL? ..N
FLASH DWELL INTERVAL? ...............N
ALLOW PEDS IN DWELL INTERVAL? .......N
RE-TIME DWELL INTERVAL? .............N
OVERLAPS:            | ABCDEFGHIJKLMNOP
DWELL INT FLASH YELLOW |
OMIT OVERLAPS:       |    X
```

PROGRAMMING COMPLETE

*TIME DEFAULTS TO TIME USED BY PHASE DURING NORMAL OPERATION

NOTE!

PROGRAM EXTEND TIME ON ALL 'OPTICAL' DETECTOR UNITS FOR 2 SEC.

THIS ELECTRICAL DETAIL IS FOR
THE SIGNAL DESIGN: 03-0384T1
DESIGNED: NOVEMBER 2017
SEALED: 4-11-18
REVISED: N/A

Signal Upgrade
Temporary Design 1 (Sheet 3 of 6)
Construction Phase II

DOCUMENT NOT CONSIDERED FINAL UNLESS ALL SIGNATURES COMPLETED

HNTB NORTH CAROLINA, P.C.
343 E. Six Forks Road, Suite 200
Raleigh, North Carolina 27609
NC License No: C-1554
(919) 546-8997

ELECTRICAL AND PROGRAMMING DETAILS FOR:

Prepared for: Transportation Mobility and Safety Division, North Carolina Department of Transportation, Traffic Management Section

750 N.Greenfield Pkwy.Garner,NC 27529

SR 1308 (Gum Branch Road)
at
NC 53 / SR 2071 (Western Blvd)

Division 03 | Onslow Co. | Jacksonville

PLAN DATE:	November 2017	REVIEWED BY:	T.R. Terrell
PREPARED BY:	J.A. Wagner	REVIEWED BY:	N.R. Simmons

REVISIONS	INIT.	DATE

SEAL

NORTH CAROLINA PROFESSIONAL SEAL 031464 ENGINEER NATASHA R. SIMMONS

DocuSigned by: Natasha R. Simmons
SIGNATURE 4/11/2018 DATE

SIG. INVENTORY NO. 03-0384T1

DocuSign Envelope ID: EE8B0D1E-264F-449B-BB76-7167AD3CFCB5

PROJECT REFERENCE NO.	SHEET NO.
U-5319	Sig. 2.5

INPUT PAGE 2 ASSIGNMENT PROGRAMMING DETAIL FOR ALTERNATE PHASING - LOOP 1A

(program controller as shown below)

NOTES: 1. THIS PROGRAMMING APPLIES FOR INPUT PAGE 2 ONLY. INPUT PAGE 1 WILL USE STANDARD DEFAULT SETTINGS. THIS PROGRAMMING IS NECESSARY FOR PROPER DETECTOR OPERATION DURING ALTERNATE PHASING OPERATION.

2. THE FIRST TASK THIS PROGRAMMING ACCOMPLISHES IS THE DISABLING OF INPUT #10 (DETECTOR 26) SO THAT A VEHICLE CALL WILL NOT BE PLACED TO PHASE 6 DURING ALTERNATE PHASING OPERATION. THE SECOND TASK THIS PROGRAMMING ACCOMPLISHES IS THAT IT REASSIGNS DETECTOR 51 TO INPUT #18 SO THAT THE DELAY ON LOOP 1A CAN BE REDUCED FROM 15 SECONDS TO 3 SECONDS.

FROM MAIN MENU PRESS '5' (INPUTS). THEN PRESS 'NEXT' TO GET TO INPUT PAGE '2'. PRESS THE '+' KEY UNTIL INPUT 10 IS REACHED.

```
PAGE: 2 C1 PIN:48  VEHICLE DETECTOR
INPUT ASSIGNMENT #.................10
DEBOUNCE TIME (0-25.5 SEC).........0.5
DELAY TIME (0-25.5 SEC).............0.0
HOLD-OVER TIME (0-25.5 SEC).........0.0
ASSIGNMENT SELECTION:
NOT ENABLED (Y/N)...................Y
VEHICLE DETECTOR (1-64).............26
PEDESTRIAN DETECTOR (1-16).........._
ALTERNATE PED DETECTOR (1-16)......._
PREEMPT (1-10)......................._
INVERTED PREEMPT (1-10).............._
STOP TIME (Y/N)......................_
FLASH SENSE (Y/N)...................._
DOOR OPEN (Y/N)......................_
MANUAL CONTROL ENABLE (Y/N).........._
MANUAL CONTROL ADVANCE (Y/N)........._
SPECIAL FUNCTION ALARM (1-8)........._
TOD HOUR SYCHRONIZATION (0-23)......._
FORCE OFF RING (1-4)................._
HOLD PHASES (1-16)..................._
PLAN (65=FLSH,66=FREE)..._ OFFSET#..._
CHANGE PHASE SEQUENCE PAGE (1-12)...._
CHANGE PHASE TIMING PAGE (1-4)......._
CHANGE PHASE CONTROL PAGE (1-4)....._
CHANGE OVERLAP CONTROL PAGE (1-4)...._
CHANGE INPUT PAGE (1-4).............._
CHANGE OUTPUT PAGE (1-4)............._
OVERRIDE PHASE CONTROL FUNCTION (Y)._
```

ENTER A 'Y' FOR NOT ENABLED

DEFAULT DETECTOR NUMBER WILL REMAIN UNTIL 'NOT ENABLED' IS ENTERED.

(LOOP 1A - PHASE 6)

```
PAGE: 2 C1 PIN:48  NOT ENABLED
INPUT ASSIGNMENT #.................10
DEBOUNCE TIME (0-25.5 SEC).........0.5
DELAY TIME (0-25.5 SEC).............0.0
HOLD-OVER TIME (0-25.5 SEC).........0.0
ASSIGNMENT SELECTION:
NOT ENABLED (Y/N)...................Y
VEHICLE DETECTOR (1-64).............._
PEDESTRIAN DETECTOR (1-16).........._
ALTERNATE PED DETECTOR (1-16)......._
PREEMPT (1-10)......................._
INVERTED PREEMPT (1-10).............._
STOP TIME (Y/N)....................._
FLASH SENSE (Y/N)...................._
DOOR OPEN (Y/N)....................._
MANUAL CONTROL ENABLE (Y/N).........._
MANUAL CONTROL ADVANCE (Y/N)........._
SPECIAL FUNCTION ALARM (1-8)........._
TOD HOUR SYCHRONIZATION (0-23)......._
FORCE OFF RING (1-4)................._
HOLD PHASES (1-16)..................._
PLAN (65=FLSH,66=FREE)..._ OFFSET#..._
CHANGE PHASE SEQUENCE PAGE (1-12)...._
CHANGE PHASE TIMING PAGE (1-4)......._
CHANGE PHASE CONTROL PAGE (1-4)....._
CHANGE OVERLAP CONTROL PAGE (1-4)...._
CHANGE INPUT PAGE (1-4).............._
CHANGE OUTPUT PAGE (1-4)............._
OVERRIDE PHASE CONTROL FUNCTION (Y)._
```

PRESS '+' TO ADVANCE TO INPUT 18

```
PAGE: 2 C1 PIN:56  VEHICLE DETECTOR
INPUT ASSIGNMENT #.................18
DEBOUNCE TIME (0-25.5 SEC).........0.5
DELAY TIME (0-25.5 SEC).............0.0
HOLD-OVER TIME (0-25.5 SEC).........0.0
ASSIGNMENT SELECTION:
NOT ENABLED (Y/N)...................._
VEHICLE DETECTOR (1-64).............1
PEDESTRIAN DETECTOR (1-16).........._
ALTERNATE PED DETECTOR (1-16)......._
PREEMPT (1-10)......................._
INVERTED PREEMPT (1-10).............._
STOP TIME (Y/N)....................._
FLASH SENSE (Y/N)...................._
DOOR OPEN (Y/N)....................._
MANUAL CONTROL ENABLE (Y/N).........._
MANUAL CONTROL ADVANCE (Y/N)........._
SPECIAL FUNCTION ALARM (1-8)........._
TOD HOUR SYCHRONIZATION (0-23)......._
FORCE OFF RING (1-4)................._
HOLD PHASES (1-16)..................._
PLAN (65=FLSH,66=FREE)..._ OFFSET#..._
CHANGE PHASE SEQUENCE PAGE (1-12)...._
CHANGE PHASE TIMING PAGE (1-4)......._
CHANGE PHASE CONTROL PAGE (1-4)....._
CHANGE OVERLAP CONTROL PAGE (1-4)...._
CHANGE INPUT PAGE (1-4).............._
CHANGE OUTPUT PAGE (1-4)............._
OVERRIDE PHASE CONTROL FUNCTION (Y)._
```

ENTER '51' TO REASSIGN THE VEHICLE DETECTOR FOR THIS INPUT

(LOOP 1A - PHASE 1)

```
PAGE: 2 C1 PIN:56  VEHICLE DETECTOR
INPUT ASSIGNMENT #.................18
DEBOUNCE TIME (0-25.5 SEC).........0.5
DELAY TIME (0-25.5 SEC).............0.0
HOLD-OVER TIME (0-25.5 SEC).........0.0
ASSIGNMENT SELECTION:
NOT ENABLED (Y/N)...................._
VEHICLE DETECTOR (1-64).............51
PEDESTRIAN DETECTOR (1-16).........._
ALTERNATE PED DETECTOR (1-16)......._
PREEMPT (1-10)......................._
INVERTED PREEMPT (1-10).............._
STOP TIME (Y/N)....................._
FLASH SENSE (Y/N)...................._
DOOR OPEN (Y/N)....................._
MANUAL CONTROL ENABLE (Y/N).........._
MANUAL CONTROL ADVANCE (Y/N)........._
SPECIAL FUNCTION ALARM (1-8)........._
TOD HOUR SYCHRONIZATION (0-23)......._
FORCE OFF RING (1-4)................._
HOLD PHASES (1-16)..................._
PLAN (65=FLSH,66=FREE)..._ OFFSET#..._
CHANGE PHASE SEQUENCE PAGE (1-12)...._
CHANGE PHASE TIMING PAGE (1-4)......._
CHANGE PHASE CONTROL PAGE (1-4)....._
CHANGE OVERLAP CONTROL PAGE (1-4)...._
CHANGE INPUT PAGE (1-4).............._
CHANGE OUTPUT PAGE (1-4)............._
OVERRIDE PHASE CONTROL FUNCTION (Y)._
```

PROGRAMMING COMPLETE

SPECIAL DETECTOR PROGRAMMING DETAIL - LOOP 1A (ALT.)

(program controller as shown below)

FROM MAIN MENU PRESS '7' (DETECTORS). THEN PRESS '1' FOR VEHICLE DETECTORS. PRESS THE '-' KEY TO GET TO VEHICLE DETECTOR #51.

```
VEHICLE DETECTOR #51  SETTINGS (+-.1-64)
SETTING:                          (Y/N)
ENABLE DETECTOR.....................N
ENABLE LOGGING......................N
ENABLE DIAGNOSTICS..................N
SPEED TRAP..........................N
CALL DETECTOR.......................Y
EXTENSION DETECTOR..................Y
MODE 2 STOP BAR.....................N
SWITCHING DETECTOR..................N
DUPLICATING DETECTOR................N
ENABLE FULL TIME DELAY..............N
IF FAILED, SET MIN RECALL?..........N
IF FAILED, SET MAX1 RECALL?.........N
IF FAILED, SET MAX2 RECALL?.........N
PHASE#          ¦1234567891011121314 1516
PHASES ASSIGNED ¦
SWITCH/DUPLICATE¦
LOOP SIZE (0-255 FT)................6
SPEED TRAP DISTANCE (0-255 FT)......0
STOP BAR TIME (0-255 SEC)...........0
STRETCH (0-25.5 SEC)................0.0
DELAY (0-255 SEC)...................0
MAX CALLS/MIN (0-255)..............255
MIN CALLS/DIAGNOSTIC PERIOD (0-255).0
MAX OCCUPANCY (0-100%).............100
EXTENSION DISABLE TIME (0-255 SEC)..0
QUEUE MAX OCCUPANCY TIME (0-255)....0
QUEUE GAP RESET TIME (0-25.5).......0.0
PREEMPTION INDEX FOR QUEUE (0-10)...0
```

ENTER 'Y' FOR ENABLE DETECTOR

ENTER '1' FOR PHASES ASSIGNED

ENSURE DELAY IS '3'

```
VEHICLE DETECTOR #51  SETTINGS (+-.1-64)
SETTING:                          (Y/N)
ENABLE DETECTOR.....................Y
ENABLE LOGGING......................N
ENABLE DIAGNOSTICS..................N
SPEED TRAP..........................N
CALL DETECTOR.......................Y
EXTENSION DETECTOR..................Y
MODE 2 STOP BAR.....................N
SWITCHING DETECTOR..................N
DUPLICATING DETECTOR................N
ENABLE FULL TIME DELAY..............N
IF FAILED, SET MIN RECALL?..........N
IF FAILED, SET MAX1 RECALL?.........N
IF FAILED, SET MAX2 RECALL?.........N
PHASE#          ¦1234567891011121314 1516
PHASES ASSIGNED ¦X
SWITCH/DUPLICATE¦
LOOP SIZE (0-255 FT)................6
SPEED TRAP DISTANCE (0-255 FT)......0
STOP BAR TIME (0-255 SEC)...........0
STRETCH (0-25.5 SEC)................0.0
DELAY (0-255 SEC)...................3
MAX CALLS/MIN (0-255)..............255
MIN CALLS/DIAGNOSTIC PERIOD (0-255).0
MAX OCCUPANCY (0-100%).............100
EXTENSION DISABLE TIME (0-255 SEC)..0
QUEUE MAX OCCUPANCY TIME (0-255)....0
QUEUE GAP RESET TIME (0-25.5).......0.0
PREEMPTION INDEX FOR QUEUE (0-10)...0
```

DETECTOR PROGRAMMING COMPLETE

NOTE: DETECTOR IS PROGRAMMED PER THE INPUT FILE CONNECTION AND PROGRAMMING CHART SHOWN ON SHEET 1.

THIS ELECTRICAL DETAIL IS FOR THE SIGNAL DESIGN: 03-0384T1
DESIGNED: NOVEMBER 2017
SEALED: 4-11-18
REVISED: N/A

Signal Upgrade
Temporary Design 1 (Sheet 4 of 6)
Construction Phase II

DOCUMENT NOT CONSIDERED FINAL UNLESS ALL SIGNATURES COMPLETED

HNTB NORTH CAROLINA, P.C.
343 E. Six Forks Road, Suite 200
Raleigh, North Carolina 27609
NC License No: C-1554
(919) 546-8997

ELECTRICAL AND PROGRAMMING DETAILS FOR:

Prepared for: Transportation Mobility and Safety Division, North Carolina Department of Transportation, Signals Management Section

750 N.Greenfield Pkwy,Garner,NC 27529

SR 1308 (Gum Branch Road)
at
NC 53 / SR 2071 (Western Blvd)

Division 03 | Onslow Co. | Jacksonville

PLAN DATE:	November 2017	REVIEWED BY:	T.R. Terrell
PREPARED BY:	J.A. Wagner	REVIEWED BY:	N.R. Simmons

REVISIONS	INIT.	DATE

SEAL

NORTH CAROLINA PROFESSIONAL SEAL 031464 ENGINEER NATASHA R. SIMMONS

DocuSigned by: Natasha R. Simmons
F6DA8DFEAD464A...
SIGNATURE

4/11/2018
DATE

SIG. INVENTORY NO. 03-0384T1

DocuSign Envelope ID: EE8B0D1E-264F-449B-BB76-7167AD3CFCB5

PROJECT REFERENCE NO.	SHEET NO.
U-5319	Sig. 2.6

INPUT PAGE 2 ASSIGNMENT PROGRAMMING DETAIL FOR ALTERNATE PHASING - LOOP 5A

(program controller as shown below)

NOTES: 1. THIS PROGRAMMING APPLIES FOR INPUT PAGE 2 ONLY. INPUT PAGE 1 WILL USE STANDARD DEFAULT SETTINGS. THIS PROGRAMMING IS NECESSARY FOR PROPER DETECTOR OPERATION DURING ALTERNATE PHASING OPERATION.

2. THE FIRST TASK THIS PROGRAMMING ACCOMPLISHES IS THE DISABLING OF INPUT #9 (DETECTOR 22) SO THAT A VEHICLE CALL WILL NOT BE PLACED TO PHASE 2 DURING ALTERNATE PHASING OPERATION. THE SECOND TASK THIS PROGRAMMING ACCOMPLISHES IS THAT IT REASSIGNS DETECTOR 55 TO INPUT #17 SO THAT THE DELAY ON LOOP 5A CAN BE REDUCED FROM 15 SECONDS TO 3 SECONDS.

FROM MAIN MENU PRESS '5' (INPUTS), THEN PRESS 'NEXT' TO GET TO INPUT PAGE '2'. PRESS THE '+' KEY UNTIL INPUT 9 IS REACHED.

```
PAGE: 2 C1 PIN:47  VEHICLE DETECTOR
INPUT ASSIGNMENT #.................9
DEBOUNCE TIME (0-25.5 SEC).........0.5
DELAY TIME (0-25.5 SEC).............0.0
HOLD-OVER TIME (0-25.5 SEC).........0.0
ASSIGNMENT SELECTION:
NOT ENABLED (Y/N)...................Y
VEHICLE DETECTOR (1-64).............22
PEDESTRIAN DETECTOR (1-16).........._
ALTERNATE PED DETECTOR (1-16)......._
PREEMPT (1-10)......................._
INVERTED PREEMPT (1-10).............._
STOP TIME (Y/N)......................_
FLASH SENSE (Y/N)...................._
DOOR OPEN (Y/N)......................_
MANUAL CONTROL ENABLE (Y/N).........._
MANUAL CONTROL ADVANCE (Y/N)........._
SPECIAL FUNCTION ALARM (1-8)........._
TOD HOUR SYCHRONIZATION (0-23)......._
FORCE OFF RING (1-4)................._
HOLD PHASES (1-16)..................._
PLAN (65=FLSH.66=FREE)...._ OFFSET#.._
CHANGE PHASE SEQUENCE PAGE (1-12)...._
CHANGE PHASE TIMING PAGE (1-4)......._
CHANGE PHASE CONTROL PAGE (1-4)......_
CHANGE OVERLAP CONTROL PAGE (1-4)...._
CHANGE INPUT PAGE (1-4).............._
CHANGE OUTPUT PAGE (1-4)............._
OVERRIDE PHASE CONTROL FUNCTION (Y)._
```

→ ENTER A 'Y' FOR NOT ENABLED →

DEFAULT DETECTOR NUMBER WILL REMAIN UNTIL 'NOT ENABLED' IS ENTERED.

(LOOP 5A - PHASE 2)

```
PAGE: 2 C1 PIN:47  NOT ENABLED
INPUT ASSIGNMENT #.................9
DEBOUNCE TIME (0-25.5 SEC).........0.5
DELAY TIME (0-25.5 SEC).............0.0
HOLD-OVER TIME (0-25.5 SEC).........0.0
ASSIGNMENT SELECTION:
NOT ENABLED (Y/N)...................Y
VEHICLE DETECTOR (1-64).............._
PEDESTRIAN DETECTOR (1-16).........._
ALTERNATE PED DETECTOR (1-16)......._
PREEMPT (1-10)......................._
INVERTED PREEMPT (1-10).............._
STOP TIME (Y/N)......................_
FLASH SENSE (Y/N)...................._
DOOR OPEN (Y/N)......................_
MANUAL CONTROL ENABLE (Y/N).........._
MANUAL CONTROL ADVANCE (Y/N)........._
SPECIAL FUNCTION ALARM (1-8)........._
TOD HOUR SYCHRONIZATION (0-23)......._
FORCE OFF RING (1-4)................._
HOLD PHASES (1-16)..................._
PLAN (65=FLSH.66=FREE)...._ OFFSET#.._
CHANGE PHASE SEQUENCE PAGE (1-12)...._
CHANGE PHASE TIMING PAGE (1-4)......._
CHANGE PHASE CONTROL PAGE (1-4)......_
CHANGE OVERLAP CONTROL PAGE (1-4)...._
CHANGE INPUT PAGE (1-4).............._
CHANGE OUTPUT PAGE (1-4)............._
OVERRIDE PHASE CONTROL FUNCTION (Y)._
```

PRESS '+' TO ADVANCE TO INPUT 17

```
PAGE: 2 C1 PIN:55  VEHICLE DETECTOR
INPUT ASSIGNMENT #.................17
DEBOUNCE TIME (0-25.5 SEC).........0.5
DELAY TIME (0-25.5 SEC).............0.0
HOLD-OVER TIME (0-25.5 SEC).........0.0
ASSIGNMENT SELECTION:
NOT ENABLED (Y/N)...................._
VEHICLE DETECTOR (1-64).............5
PEDESTRIAN DETECTOR (1-16).........._
ALTERNATE PED DETECTOR (1-16)......._
PREEMPT (1-10)......................._
INVERTED PREEMPT (1-10).............._
STOP TIME (Y/N)......................_
FLASH SENSE (Y/N)...................._
DOOR OPEN (Y/N)......................_
MANUAL CONTROL ENABLE (Y/N).........._
MANUAL CONTROL ADVANCE (Y/N)........._
SPECIAL FUNCTION ALARM (1-8)........._
TOD HOUR SYCHRONIZATION (0-23)......._
FORCE OFF RING (1-4)................._
HOLD PHASES (1-16)..................._
PLAN (65=FLSH.66=FREE)...._ OFFSET#.._
CHANGE PHASE SEQUENCE PAGE (1-12)...._
CHANGE PHASE TIMING PAGE (1-4)......._
CHANGE PHASE CONTROL PAGE (1-4)......_
CHANGE OVERLAP CONTROL PAGE (1-4)...._
CHANGE INPUT PAGE (1-4).............._
CHANGE OUTPUT PAGE (1-4)............._
OVERRIDE PHASE CONTROL FUNCTION (Y)._
```

ENTER '55' TO REASSIGN THE VEHICLE DETECTOR FOR THIS INPUT →

(LOOP 5A - PHASE 5)

```
PAGE: 2 C1 PIN:55  VEHICLE DETECTOR
INPUT ASSIGNMENT #.................17
DEBOUNCE TIME (0-25.5 SEC).........0.5
DELAY TIME (0-25.5 SEC).............0.0
HOLD-OVER TIME (0-25.5 SEC).........0.0
ASSIGNMENT SELECTION:
NOT ENABLED (Y/N)...................._
VEHICLE DETECTOR (1-64).............55
PEDESTRIAN DETECTOR (1-16).........._
ALTERNATE PED DETECTOR (1-16)......._
PREEMPT (1-10)......................._
INVERTED PREEMPT (1-10).............._
STOP TIME (Y/N)......................_
FLASH SENSE (Y/N)...................._
DOOR OPEN (Y/N)......................_
MANUAL CONTROL ENABLE (Y/N).........._
MANUAL CONTROL ADVANCE (Y/N)........._
SPECIAL FUNCTION ALARM (1-8)........._
TOD HOUR SYCHRONIZATION (0-23)......._
FORCE OFF RING (1-4)................._
HOLD PHASES (1-16)..................._
PLAN (65=FLSH.66=FREE)...._ OFFSET#.._
CHANGE PHASE SEQUENCE PAGE (1-12)...._
CHANGE PHASE TIMING PAGE (1-4)......._
CHANGE PHASE CONTROL PAGE (1-4)......_
CHANGE OVERLAP CONTROL PAGE (1-4)...._
CHANGE INPUT PAGE (1-4).............._
CHANGE OUTPUT PAGE (1-4)............._
OVERRIDE PHASE CONTROL FUNCTION (Y)._
```

PROGRAMMING COMPLETE

SPECIAL DETECTOR PROGRAMMING DETAIL - LOOP 5A (ALT.)

(program controller as shown below)

FROM MAIN MENU PRESS '7' (DETECTORS), THEN PRESS '1' FOR VEHICLE DETECTORS. PRESS THE '-' KEY TO GET TO VEHICLE DETECTOR #55.

```
VEHICLE DETECTOR #55  SETTINGS (+-.1-64)
SETTING:                          (Y/N)
ENABLE DETECTOR.....................N
ENABLE LOGGING......................N
ENABLE DIAGNOSTICS..................N
SPEED TRAP..........................N
CALL DETECTOR.......................Y
EXTENSION DETECTOR..................Y
MODE 2 STOP BAR.....................N
SWITCHING DETECTOR..................N
DUPLICATING DETECTOR................N
ENABLE FULL TIME DELAY..............N
IF FAILED, SET MIN RECALL?..........N
IF FAILED, SET MAX1 RECALL?.........N
IF FAILED, SET MAX2 RECALL?.........N
PHASE#          ¦1234567891011121314 1516
PHASES ASSIGNED ¦
SWITCH/DUPLICATE¦
LOOP SIZE (0-255 FT)................6
SPEED TRAP DISTANCE (0-255 FT)......0
STOP BAR TIME (0-255 SEC)...........0
STRETCH (0-25.5 SEC)................0.0
DELAY (0-255 SEC)...................0
MAX CALLS/MIN (0-255)..............255
MIN CALLS/DIAGNOSTIC PERIOD (0-255).0
MAX OCCUPANCY (0-100%).............100
EXTENSION DISABLE TIME (0-255 SEC)..0
QUEUE MAX OCCUPANCY TIME (0-255)....0
QUEUE GAP RESET TIME (0-25.5).......0.0
PREEMPTION INDEX FOR QUEUE (0-10)...0
```

→ ENTER 'Y' FOR ENABLE DETECTOR →

→ ENTER '5' FOR PHASES ASSIGNED →

→ ENSURE DELAY IS '3' →

```
VEHICLE DETECTOR #55  SETTINGS (+-.1-64)
SETTING:                          (Y/N)
ENABLE DETECTOR.....................Y
ENABLE LOGGING......................N
ENABLE DIAGNOSTICS..................N
SPEED TRAP..........................N
CALL DETECTOR.......................Y
EXTENSION DETECTOR..................Y
MODE 2 STOP BAR.....................N
SWITCHING DETECTOR..................N
DUPLICATING DETECTOR................N
ENABLE FULL TIME DELAY..............N
IF FAILED, SET MIN RECALL?..........N
IF FAILED, SET MAX1 RECALL?.........N
IF FAILED, SET MAX2 RECALL?.........N
PHASE#          ¦1234567891011121314 1516
PHASES ASSIGNED ¦    X
SWITCH/DUPLICATE¦
LOOP SIZE (0-255 FT)................6
SPEED TRAP DISTANCE (0-255 FT)......0
STOP BAR TIME (0-255 SEC)...........0
STRETCH (0-25.5 SEC)................0.0
DELAY (0-255 SEC)...................3
MAX CALLS/MIN (0-255)..............255
MIN CALLS/DIAGNOSTIC PERIOD (0-255).0
MAX OCCUPANCY (0-100%).............100
EXTENSION DISABLE TIME (0-255 SEC)..0
QUEUE MAX OCCUPANCY TIME (0-255)....0
QUEUE GAP RESET TIME (0-25.5).......0.0
PREEMPTION INDEX FOR QUEUE (0-10)...0
```

DETECTOR PROGRAMMING COMPLETE

NOTE: DETECTOR IS PROGRAMMED PER THE INPUT FILE CONNECTION AND PROGRAMMING CHART SHOWN ON SHEET 1.

THIS ELECTRICAL DETAIL IS FOR THE SIGNAL DESIGN: 03-0384T1
DESIGNED: NOVEMBER 2017
SEALED: 4-11-18
REVISED: N/A

Signal Upgrade
Temporary Design 1 (Sheet 5 of 6)
Construction Phase II

DOCUMENT NOT CONSIDERED FINAL UNLESS ALL SIGNATURES COMPLETED

HNTB NORTH CAROLINA, P.C.
343 E. Six Forks Road, Suite 200
Raleigh, North Carolina 27609
NC License No: C-1554
(919) 546-8997

ELECTRICAL AND PROGRAMMING DETAILS FOR:

Prepared for: Transportation Mobility and Safety Division, North Carolina Department of Transportation, Signals Management Section
750 N.Greenfield Pkwy,Garner,NC 27529

SR 1308 (Gum Branch Road)
at
NC 53 / SR 2071 (Western Blvd)

Division 03 | Onslow Co. | Jacksonville

PLAN DATE:	November 2017	REVIEWED BY:	T.R. Terrell
PREPARED BY:	J.A. Wagner	REVIEWED BY:	N.R. Simmons

REVISIONS	INIT.	DATE

SEAL
NORTH CAROLINA PROFESSIONAL SEAL 031464 ENGINEER NATASHA R. SIMMONS

DocuSigned by: Natasha R. Simmons
F6DA8DFDAD464A...
SIGNATURE 4/11/2018 DATE

SIG. INVENTORY NO. 03-0384T1

DocuSign Envelope ID: EE8B0D1E-264F-449B-BB76-7167AD3CFCB5

PROJECT REFERENCE NO.	SHEET NO.
U-5319	Sig. 2.7

ALTERNATE PHASING ACTIVATION DETAIL

TO RUN ALT. PHASING DURING COORDINATION - SELECT ALL PAGE CHANGES (AS SHOWN BELOW) WITHIN COORDINATION PLAN PROGRAMMING.

TO RUN ALT. PHASING DURING FREE RUN - PROGRAM PAGE CHANGES (SHOWN BELOW) IN SEPARATE TIME OF DAY EVENTS. IF PAGE 1 IS USED, NO EVENT PROGRAMMING IS NECESSARY FOR THAT PARTICULAR PAGE.

PHASING	INPUTS PAGE	OVERLAPS PAGE
ACTIVE PAGES REQUIRED TO RUN DEFAULT PHASING	1	1
ACTIVE PAGES REQUIRED TO RUN ALTERNATE PHASING	2	2

NOTE: PAGES NOT SHOWN (i.e. sequence, phase control, etc.) SHOULD REMAIN AS '1', OR AS DEFINED BY TIMING ENGINEER.

IMPORTANT: IF ALT. PHASING IS USED DURING FREE RUN AND COORDINATION, DO NOT OPERATE TIME OF DAY PAGE CHANGE EVENTS CONCURRENTLY WITH COORDINATION PLAN EVENTS IN THE EVENT SCHEDULER. (EX. FREE RUN PAGE CHANGE EVENT SHOULD END BEFORE COORDINATION PLAN EVENT STARTS AND VICE-VERSA).

ALTERNATE PHASING PAGE CHANGE SUMMARY

THE FOLLOWING IS A SUMMARY OF WHAT TAKES PLACE WHEN THESE OVERLAP/INPUT PAGE CHANGES ACTIVATE TO CALL THE "ALTERNATE PHASING":

OVERLAPS PAGE 2: Modifies overlap parent phases for heads 11 and 51 to run protected turns only.

INPUTS PAGE 2: Disables phase 6 call on loop 1A and reduces delay time for phase 1 call on loop 1A to 3 seconds.

Disables phase 2 call on loop 5A and reduces delay time for phase 5 call on loop 5A to 3 seconds.

THIS ELECTRICAL DETAIL IS FOR THE SIGNAL DESIGN: 03-0384T1
DESIGNED: NOVEMBER 2017
SEALED: 4-11-18
REVISED: N/A

Signal Upgrade
Temporary Design 1 (Sheet 6 of 6)
Construction Phase II

DOCUMENT NOT CONSIDERED FINAL UNLESS ALL SIGNATURES COMPLETED

ELECTRICAL AND PROGRAMMING DETAILS FOR:

Prepared for: Transportation Mobility and Safety Division, State of North Carolina, Department of Transportation, Signals Management Section
750 N.Greenfield Pkwy,Garner,NC 27529

SR 1308 (Gum Branch Road)
at
NC 53 / SR 2071 (Western Blvd)

Division 03 Onslow Co. Jacksonville

PLAN DATE:	November 2017	REVIEWED BY:	T.R. Terrell
PREPARED BY:	J.A. Wagner	REVIEWED BY:	N.R. Simmons

REVISIONS	INIT.	DATE

SEAL

NORTH CAROLINA PROFESSIONAL SEAL 031464 ENGINEER NATASHA R. SIMMONS

DocuSigned by: Natasha R. Simmons
EFDA8BDF3AD445A
SIGNATURE 4/11/2018 DATE

SIG. INVENTORY NO. 03-0384T1

HNTB
HNTB NORTH CAROLINA, P.C.
343 E. Six Forks Road, Suite 200
Raleigh, North Carolina 27609
NC License No: C-1554
(919) 546-8997

DocuSign Envelope ID: A80F2234-B4CF-4A7A-8A1D-E9CAA5762171

PROJECT REFERENCE NO.	SHEET NO.
U-5319	Sig. 3.0

PHASING DIAGRAM

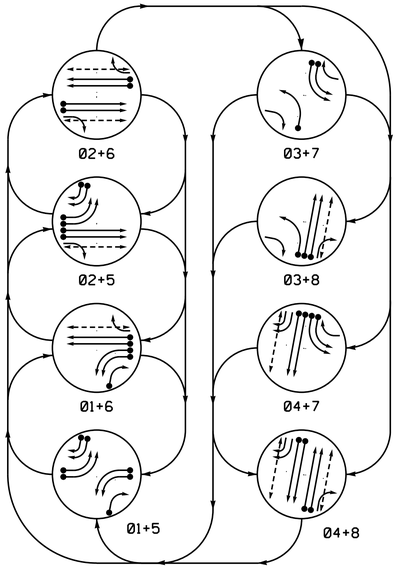

EV PREEMPT PHASES

(Medium Priority)

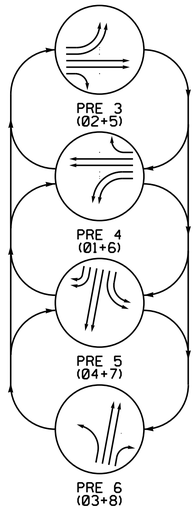

SIGNAL FACE I.D.

All Heads L.E.D.

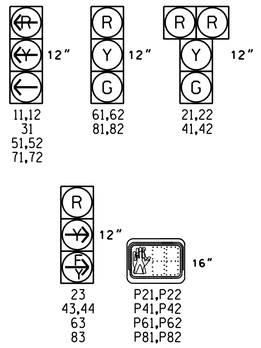

TABLE OF OPERATION

SIGNAL FACE	PHASE 01+5	01+6	02+5	02+6	03+7	03+8	04+7	04+8	EVP 3	EVP 4	EVP 5	EVP 6	FLASH
11,12	~~—~~	~~—~~	~~R~~	~~R~~	~~R~~	~~R~~	~~R~~	~~R~~	~~R~~	~~—~~	~~R~~	~~R~~	~~R~~
21,22	R	R	G	G	R	R	R	R	G	R	R	R	Y
23	R	R	~~F/Y~~	~~F/Y~~	~~F/Y~~	~~F/Y~~	R	R	~~F/Y~~	R	R	R	~~Y~~
31	~~R~~	~~R~~	~~R~~	~~R~~	~~—~~	~~—~~	~~R~~	~~R~~	~~R~~	~~R~~	~~R~~	~~—~~	~~R~~
41,42	R	R	R	R	R	R	G	G	R	R	G	R	R
43,44	~~F/Y~~	R	~~F/Y~~	R	R	R	~~F/Y~~	~~F/Y~~	R	R	~~F/Y~~	R	R
51,52	~~—~~	~~R~~	~~—~~	~~R~~	~~R~~	~~R~~	~~R~~	~~R~~	~~—~~	~~R~~	~~R~~	~~R~~	~~R~~
61,62	R	G	R	G	R	R	R	R	G	R	R	Y	
63	R	~~F/Y~~	R	~~F/Y~~	~~F/Y~~	~~F/Y~~	R	~~F/Y~~	R	~~F/Y~~	R	R	~~Y~~
71,72	~~R~~	~~R~~	~~R~~	~~R~~	~~—~~	~~R~~	~~—~~	~~R~~	~~R~~	~~—~~	~~R~~	~~R~~	~~R~~
81,82	R	R	R	R	R	G	R	G	R	R	R	G	R
83	~~F/Y~~	~~F/Y~~	R	R	R	~~F/Y~~	R	~~F/Y~~	R	R	R	~~F/Y~~	R
P21,P22	DW	DW	W	W	DW	DW	DW	DW	DW	DW	DW	DW	DRK
P41,P42	DW	DW	DW	DW	DW	DW	W	W	DW	DW	DW	DW	DRK
P61,P62	DW	W	DW	W	DW	DW	DW	DW	DW	DW	DW	DW	DRK
P81,P82	DW	DW	DW	DW	DW	W	DW	W	DW	DW	DW	DW	DRK

OASIS 2070L LOOP & DETECTOR INSTALLATION CHART

INDUCTIVE LOOPS					DETECTOR PROGRAMMING						
LOOP	SIZE (FT)	DISTANCE FROM STOPBAR (FT)	TURNS	NEW LOOP	PHASE	CALLING	EXTENSION	FULL TIME DELAY	STRETCH TIME	DELAY TIME	SYSTEM LOOP	NEW CARD
1A	6X40	0	2-4-2	Y	1	Y	Y	-	-	-	-	Y
1B	6X40	0	2-4-2	Y	1	Y	Y	-	-	-	-	Y
1C	6X40	0	2-4-2	Y	1	Y	Y	-	-	15	-	Y
2A	6X6	300	6	Y	2	Y	Y	-	-	-	-	Y
2B	6X6	300	6	Y	2	Y	Y	-	-	-	-	Y
3A	6X40	0	2-4-2	Y	3	Y	Y	-	-	-	-	Y
4A	6X40	0	2-4-2	Y	4	Y	Y	-	-	-	-	Y
4B	6X40	0	2-4-2	Y	4	Y	Y	-	-	-	-	Y
5A	6X40	0	2-4-2	Y	5	Y	Y	-	-	-	-	Y
5B	6X40	0	2-4-2	Y	5	Y	Y	-	-	-	-	Y
5C	6X40	0	2-4-2	Y	5	Y	Y	-	-	15	-	Y
5D	6X40	0	2-4-2	Y	5	Y	Y	-	-	15	-	Y
6A	6X6	300	6	Y	6	Y	Y	-	-	-	-	Y
6B	6X6	300	6	Y	6	Y	Y	-	-	-	-	Y
7A	6X40	0	2-4-2	Y	7	Y	Y	-	-	-	-	Y
7B	6X40	0	2-4-2	Y	7	Y	Y	-	-	-	-	Y
8A	6X40	0	2-4-2	Y	8	Y	Y	-	-	-	-	Y
8B	6X40	0	2-4-2	Y	8	Y	Y	-	-	-	-	Y
S15	6X6	+240	3	Y	-	-	-	-	-	-	Y	Y
S16	6X6	+240	3	Y	-	-	-	-	-	-	Y	Y

8 Phase
Fully Actuated w/EV Preempt
Jacksonville Signal System

NOTES

1. Refer to "Roadway Standard Drawings NCDOT" dated January 2018 and "Standard Specifications for Roads and Structures" dated January 2018.
2. Do not program signal for late night flashing operation unless otherwise directed by the Engineer.
3. Phase 1 and/or phase 5 may be lagged.
4. Phase 3 and/or phase 7 may be lagged.
5. Set all detector units to presence mode.
6. Omit "Walk" and "Don't Walk" with no pedestrian calls.
7. Program pedestrian heads to countdown the flashing "Don't Walk" time only.
8. Pedestrian pedestals are conceptual and shown for reference only.
9. This intersection features an optical preemption system. Shown locations of optical detectors are conceptual only.
10. Maximum times shown in timing chart are for free-run operation only. Coordinated signal system timing values supersede these values.
11. Closed loop system data: Controller Asset #0384.

PHASING DIAGRAM DETECTION LEGEND

- DETECTED MOVEMENT
- UNDETECTED MOVEMENT (OVERLAP)
- UNSIGNALIZED MOVEMENT
- PEDESTRIAN MOVEMENT

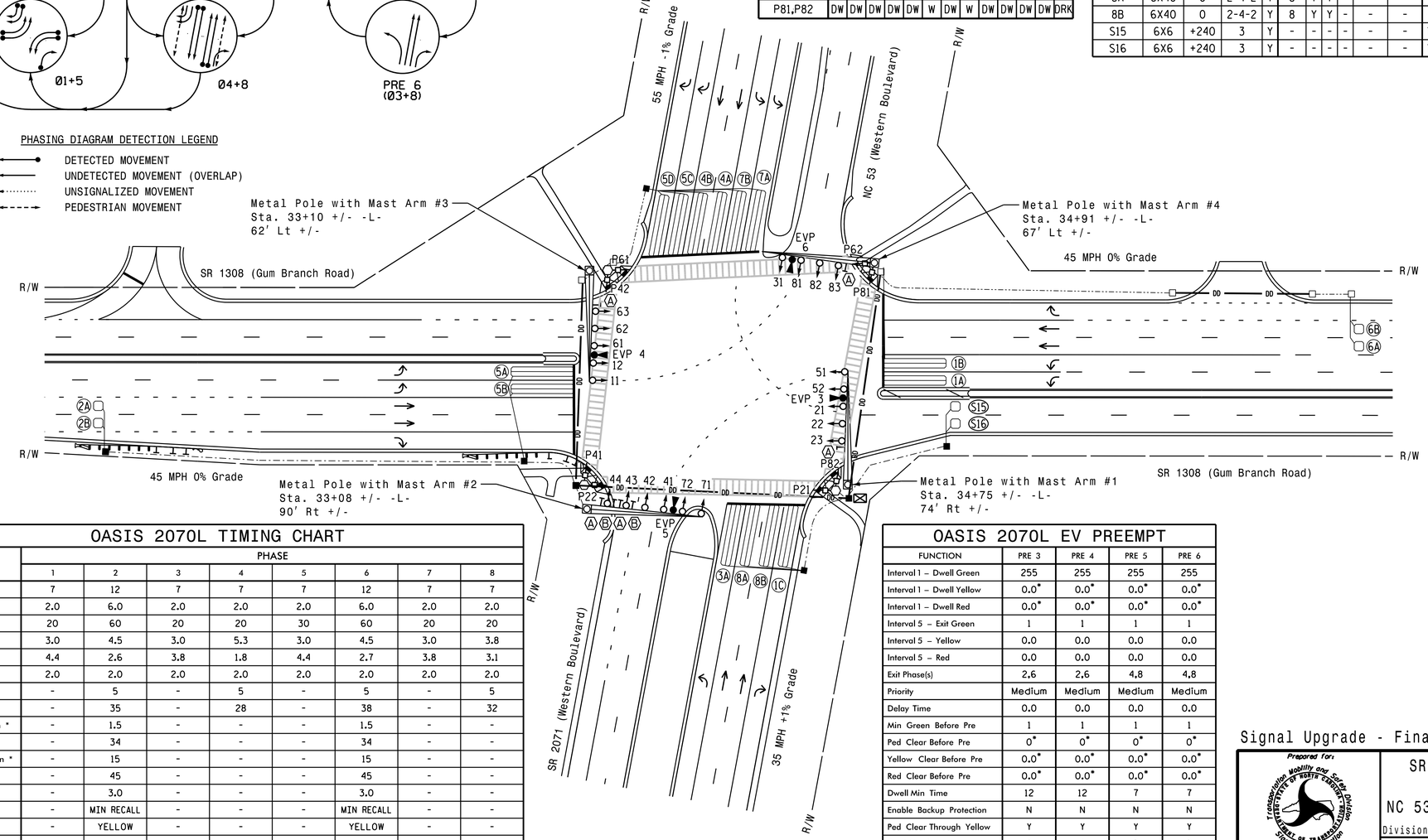

OASIS 2070L TIMING CHART

FEATURE	PHASE 1	2	3	4	5	6	7	8
Min Green 1 *	7	12	7	7	7	12	7	7
Extension 1 *	2.0	6.0	2.0	2.0	2.0	6.0	2.0	2.0
Max Green 1 *	20	60	20	20	30	60	20	20
Yellow Clearance	3.0	4.5	3.0	5.3	3.0	4.5	3.0	3.8
Red Clearance	4.4	2.6	3.8	1.8	4.4	2.7	3.8	3.1
Red Revert	2.0	2.0	2.0	2.0	2.0	2.0	2.0	2.0
Walk 1 *	-	5	-	5	-	5	-	5
Don't Walk 1	-	35	-	28	-	38	-	32
Seconds Per Actuation *	-	1.5	-	-	-	1.5	-	-
Max Variable Initial *	-	34	-	-	-	34	-	-
Time Before Reduction *	-	15	-	-	-	15	-	-
Time To Reduce *	-	45	-	-	-	45	-	-
Minimum Gap	-	3.0	-	-	-	3.0	-	-
Recall Mode	-	MIN RECALL	-	-	-	MIN RECALL	-	-
Vehicle Call Memory	-	YELLOW	-	-	-	YELLOW	-	-
Dual Entry	-	-	-	-	-	-	-	-
Simultaneous Gap	ON	ON	ON	ON	ON	ON	ON	ON

* These values may be field adjusted. Do not adjust Min Green and Extension times for phases 2 and 6 lower than what is shown. Min Green for all other phases should not be lower than 4 seconds.

OASIS 2070L EV PREEMPT

FUNCTION	PRE 3	PRE 4	PRE 5	PRE 6
Interval 1 – Dwell Green	255	255	255	255
Interval 1 – Dwell Yellow	0.0*	0.0*	0.0*	0.0*
Interval 1 – Dwell Red	0.0*	0.0*	0.0*	0.0*
Interval 5 – Exit Green	1	1	1	1
Interval 5 – Yellow	0.0	0.0	0.0	0.0
Interval 5 – Red	0.0	0.0	0.0	0.0
Exit Phase(s)	2,6	2,6	4,8	4,8
Priority	Medium	Medium	Medium	Medium
Delay Time	0.0	0.0	0.0	0.0
Min Green Before Pre	1	1	1	1
Ped Clear Before Pre	0*	0*	0*	0*
Yellow Clear Before Pre	0.0*	0.0*	0.0*	0.0*
Red Clear Before Pre	0.0*	0.0*	0.0*	0.0*
Dwell Min Time	12	12	7	7
Enable Backup Protection	N	N	N	N
Ped Clear Through Yellow	Y	Y	Y	Y
Omit Overlaps	C	A	B	D
Preempt Extend**	2	2	2	2

* Time defaults to time used for phase during normal operation
** Program Timing on Optical Detection Unit

LEGEND

PROPOSED		EXISTING
	Traffic Signal Head	
	Modified Signal Head	N/A
	Sign	
	Pedestrian Signal Head With Push Button & Sign	
	Signal Pole with Guy	
	Signal Pole with Sidewalk Guy	
	Inductive Loop Detector	
	Controller & Cabinet	
	Junction Box	
	2-in Underground Conduit	
N/A	Right of Way	
	Directional Arrow	
	Wheelchair Ramp	N/A
	Optical Detector	
	Type II Signal Pedestal	
	Metal Pole with Mastarm	
Ⓐ	"RIGHT TURN YIELD TO U-TURN" Sign	Ⓐ
Ⓑ	Right Arrow "ONLY" Sign (R3-5R)	Ⓑ

HNTB
HNTB NORTH CAROLINA, P.C.
343 E. Six Forks Road, Suite 200
Raleigh, North Carolina 27609
NC License No: C-1554
(919) 546-8997

Signal Upgrade - Final

DOCUMENT NOT CONSIDERED FINAL UNLESS ALL SIGNATURES COMPLETED

Prepared for:
NORTH CAROLINA DEPARTMENT OF TRANSPORTATION
Traffic Engineering Branch
Signal Design Section
750 N.Greenfield Pkwy.Garner,NC 27529

SR 1308 (Gum Branch Road)
at
NC 53 / SR 2071 (Western Blvd)

Division 03 Onslow County Jacksonville

PLAN DATE: November 2017 REVIEWED BY: T.R. Terrell
PREPARED BY: J.A. Wagner REVIEWED BY: N.R. Simmons

SCALE 0 40 1"=40'

REVISIONS	INIT.	DATE

SEAL
NORTH CAROLINA PROFESSIONAL SEAL 031464 ENGINEER NATASHA R. SIMMONS

DocuSigned by: Natasha R. Simmons 4/11/2018
SIGNATURE DATE

SIG. INVENTORY NO. 03-0384

DocuSign Envelope ID: A80F2234-B4CF-4A7A-8A1D-E9CAA5762171

EDI MODEL 2018ECLip-NC CONFLICT MONITOR PROGRAMMING DETAIL

(remove jumpers and set switches as shown)

ON OFF
WD ENABLE
SW2

REMOVE DIODE JUMPERS I-5, I-6, I-9, I-10, I-11, I-15, 2-5, 2-6, 2-10, 2-11, 2-12, 2-13, 2-15, 3-7, 3-8, 3-9, 3-10, 3-12, 3-16, 4-7, 4-8, 4-9, 4-10, 4-11, 4-14, 4-16, 5-9, 5-11, 5-12, 5-13, 6-9, 6-10, 6-12, 6-13, 6-15, 7-10, 7-11, 7-12, 7-14, 8-9, 8-11, 8-12, 8-14, 8-16, 9-10, 9-11, 9-12, 9-14, 9-15, 9-16, 10-11, 10-12, 10-13, 10-14, 10-15, 11-12, 11-13, 11-14, 11-16, 12-13, 12-15, 12-16, 13-15, and 14-16

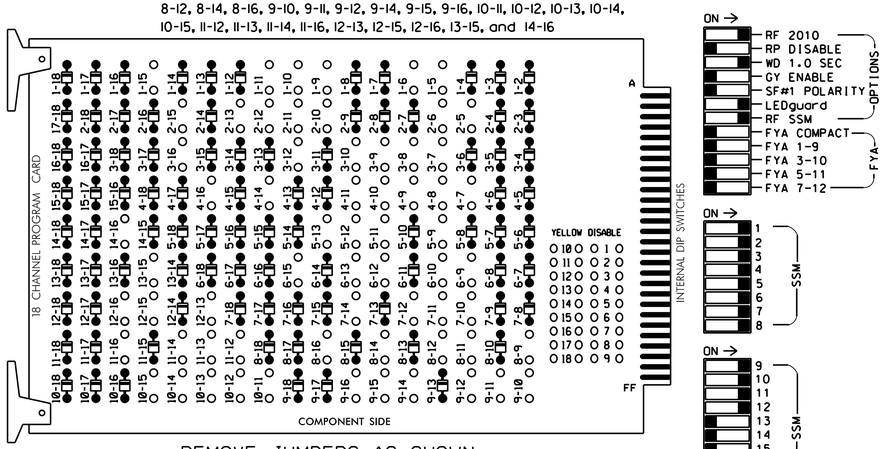

REMOVE JUMPERS AS SHOWN

■ = DENOTES POSITION OF SWITCH

NOTES:

1. Card is provided with all diode jumpers in place. Removal of any jumper allows its channels to run concurrently.
2. Ensure jumpers SEL2-SEL5 and SEL9 are present on the monitor board.
3. Ensure that Red Enable is active at all times during normal operation.
4. Integrate monitor with Ethernet network in cabinet.

NOTES

1. To prevent "flash-conflict" problems, insert red flash program blocks for all unused vehicle load switches in the output file. The installer shall verify that signal heads flash in accordance with the Signal Plans.
2. Enable Simultaneous Gap-Out for all Phases.
3. Program phases 2 and 6 for Variable Initial and Gap Reduction.
4. Program phases 2 and 6 for Start Up In Green.
5. Program phases 2, 4, 6, and 8 for Startup Ped Call.
6. Program phases 2 and 6 for Yellow Flash and overlaps 1 and 2 as Wag Overlaps.
7. The cabinet and controller are part of the Jacksonville Signal System.

EQUIPMENT INFORMATION

CONTROLLER.....NEW 2070L
CABINET.....NEW 332 W/AUX
SOFTWARE.....ECONOLITE OASIS
CABINET MOUNT.....BASE
OUTPUT FILE POSITIONS...18 WITH AUX. OUTPUT FILE
LOAD SWITCHES USED.....S1,S2,S3,S4,S5,S6,S7,S8, S9,S10,S11,S12,AUX S1, AUX S2,AUX S4,AUX S5
PHASES USED.....1,2,2PED,3,4,4PED,5,6,6PED, 7,8,8PED
OVERLAP "A".....1+8
OVERLAP "B".....6+7
OVERLAP "C".....4+5
OVERLAP "D".....2+3

PROJECT REFERENCE NO.	SHEET NO.
U-5319	Sig. 3.1

SIGNAL HEAD HOOK-UP CHART

LOAD SWITCH NO.	S1	S2	S3	S4	S5	S6	S7	S8	S9	S10	S11	S12	AUX S1	AUX S2	AUX S3	AUX S4	AUX S5	AUX S6
CMU CHANNEL NO.	1	2	13	3	4	14	5	6	15	7	8	16	9	10	17	11	12	18
PHASE	1	2	2 PED	3	4	4 PED	5	6	6 PED	7	8	8 PED	OLA	OLB	SPARE	OLC	OLD	SPARE
SIGNAL HEAD NO.	11,12	21,22	P21, P22	31	41,42	P41, P42	51,52	61,62	P61, P62	71,72	81,82	P81, P82	83 ★	63 ★	NU	43,44 ★	23 ★	NU
RED		128			101			134			107		A121	A124		A114	A101	
YELLOW		129			102			135			108							
GREEN		130			103			136			109							
RED ARROW	125			116			131			122								
YELLOW ARROW	126			117			132			123			A122	A125		A115	A102	
FLASHING YELLOW ARROW													A123	A126		A116	A103	
GREEN ARROW	127			118			133			124								
✋			113			104			119			110						
🚶			115			106			121			112						

NU = Not Used

★ See pictorial of head wiring in detail this sheet.

3 SECTION FYA SIGNAL WIRING DETAIL

(wire signal heads as shown)

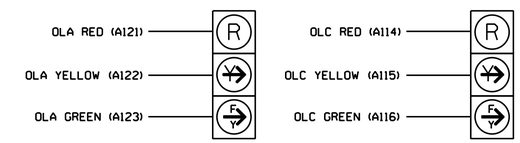

INPUT FILE POSITION LAYOUT

(front view)

		1	2	3	4	5	6	7	8	9	10	11	12	13	14
FILE "I"	U	Ø1 1A	Ø1 1B	Ø2 2A	SLOT EMPTY	Ø3 3A	Ø4 4A	SLOT EMPTY	SLOT EMPTY	SYS. DET. S15	SLOT EMPTY	SLOT EMPTY	Ø2 PED DC ISOLATOR	Ø6 PED DC ISOLATOR	FS DC ISOLATOR
	L	NOT USED	Ø1 1C	Ø2 2B		NOT USED	Ø4 4B			SYS. DET. S16			Ø4 PED DC ISOLATOR	Ø8 PED DC ISOLATOR	ST DC ISOLATOR
FILE "J"	U	Ø5 5A	Ø5 5B	Ø5 5D	Ø6 6B	Ø7 7A	Ø7 7B	Ø8 8A	SLOT EMPTY	SLOT EMPTY	SLOT EMPTY	SLOT EMPTY	CH. C PRE-3	CH. A PRE-4	SLOT EMPTY
	L	NOT USED	Ø5 5C	Ø6 6A	NOT USED	NOT USED	NOT USED	Ø8 8B					CH. D PRE-5	CH. B PRE-6	

EX.: 1A, 2A, ETC. = LOOP NO.'S

FS = FLASH SENSE
ST = STOP TIME
PRE = PREEMPT

4 CHANNEL OPTICOM OSP CARD INSERT CARD INTO SLOT J13 - RELOCATE FROM EXISTING CABINET

TYPICAL OPTICOM FIELD WIRE DETAIL

(input file, rear view)

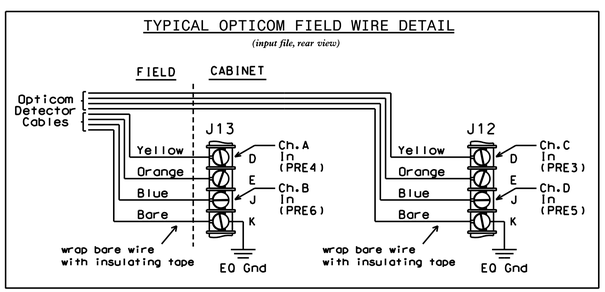

INPUT FILE CONNECTION & PROGRAMMING CHART

LOOP NO.	LOOP TERMINAL	INPUT FILE POS.	PIN NO.	INPUT ASSIGNMENT NO.	DETECTOR NO.	NEMA PHASE	CALL	EXTEND	FULL TIME DELAY	STRETCH TIME	DELAY TIME
1A	TB2-1,2	I1U	56	18	1	1	Y	Y			
1B	TB2-5,6	I2U	39	1	2	1	Y	Y			
1C	TB2-7,8	I2L	43	5	12	1	Y	Y			15
2A	TB2-9,10	I3U	63	25	32	2	Y	Y			
2B	TB2-11,12	I3L	76	38	42	2	Y	Y			
3A	TB4-5,6	I5U	58	20	3	3	Y	Y			
4A	TB4-9,10	I6U	41	3	4	4	Y	Y			
4B	TB4-11,12	I6L	45	7	14	4	Y	Y			
5A	TB3-1,2	J1U	55	17	5	5	Y	Y			
5B	TB3-5,6	J2U	40	2	6	5	Y	Y			
5C	TB3-7,8	J2L	44	6	16	5	Y	Y			15
5D	TB3-9,10	J3U	64	26	36	5	Y	Y			15
6A	TB3-11,12	J3L	77	39	46	6	Y	Y			
6B	TB5-1,2	J4U	48	10	26	6	Y	Y			
7A	TB5-5,6	J5U	57	19	7	7	Y	Y			
7B	TB5-9,10	J6U	42	4	8	7	Y	Y			
8A	TB7-1,2	J7U	66	28	38	8	Y	Y			
8B	TB7-3,4	J7L	79	41	48	8	Y	Y			
✱ S15	TB6-9,10	I9U	60	22	11	SYS					
✱ S16	TB6-11,12	I9L	62	24	13	SYS					
PED PUSH BUTTONS											
P21,P22	TB8-4,6	I12U	67	29	PED 2	2 PED					
P41,P42	TB8-5,6	I12L	69	31	PED 4	4 PED					
P61,P62	TB8-7,9	I13U	68	30	PED 6	6 PED					
P81,P82	TB8-8,9	I13L	70	32	PED 8	8 PED					

NOTE:
INSTALL DC ISOLATORS IN INPUT FILE SLOTS I12 AND I13.

✱ System detector only. Remove the vehicle phase assigned to this detector in the default programming.

INPUT FILE POSITION LEGEND: J2L
FILE J
SLOT 2
LOWER

COUNTDOWN PEDESTRIAN SIGNAL OPERATION

Countdown Ped Signals are required to display timing only during Ped Clearance Interval. Consult Ped Signal Module user's manual for instructions on selecting this feature.

THIS ELECTRICAL DETAIL IS FOR
THE SIGNAL DESIGN: 03-0384
DESIGNED: NOVEMBER 2017
SEALED: 4-11-18
REVISED: N/A

HNTB NORTH CAROLINA, P.C.
343 E. Six Forks Road, Suite 200
Raleigh, North Carolina 27609
NC License No: C-1554
(919) 546-8997

Electrical Detail - Sheet 1 of 2
Signal Upgrade - Final

DOCUMENT NOT CONSIDERED FINAL UNLESS ALL SIGNATURES COMPLETED

ELECTRICAL AND PROGRAMMING DETAILS FOR:

Prepared for: North Carolina Department of Transportation, Mobility and Safety Division, Traffic Engineering Branch, Signals Management Section

750 N.Greenfield Pkwy.Garner,NC 27529

SR 1308 (Gum Branch Road)
at
NC 53 / SR 2071 (Western Blvd)

Division 03 Onslow Co. Jacksonville

PLAN DATE:	November 2017	REVIEWED BY:	T.R. Terrell
PREPARED BY:	J.A. Wagner	REVIEWED BY:	N.R. Simmons

REVISIONS	INIT.	DATE

SEAL
NORTH CAROLINA PROFESSIONAL SEAL 031464 ENGINEER NATASHA R. SIMMONS

DocuSigned by: Natasha R. Simmons 4/11/2018
SIGNATURE DATE

SIG. INVENTORY NO. 03-0384

DocuSign Envelope ID: A80F2234-B4CF-4A7A-8A1D-E9CAA5762171

PROJECT REFERENCE NO.	SHEET NO.
U-5319	Sig. 3.2

EMERGENCY VEHICLE PREEMPTION PROGRAMMING DETAIL

(program controller as shown below)

From Main Menu press 'A' (Preemption), then '1' (Standard Preemptions). Press 'NEXT' as needed to advance to Preempts 3, 4, 5, and 6.

```
   PREEMPTION  #3  SETTINGS (NEXT:1-10)
INTERVAL/TIMING  |  CLEAR/DWELL PHASES
  GRN YEL  RED   |12345678910111213141516
1 255  0.0* 0.0* | X  X
2   0  0.0  0.0  |
3   0  0.0  0.0  |
4   0  0.0  0.0  |
5   1  0.0  0.0  | X   X
EXIT CALLS       |
          OPTIONS
PRIORITY (Y/N TO SELECT) ............MED
DELAY TIMER (0-255 SEC) .............0
MIN GREEN BEFORE PRE (0= DEFAULT)....1
PED CLEAR BEFORE PRE (0= DEFAULT)....0
YELLOW CLEAR BEFORE PRE (0= DEFAULT).0.0*
RED CLEAR BEFORE PRE (0= DEFAULT)....0.0*
DWELL MIN TIMER (0-255 SEC) .........12
DWELL MAX TIMER (0=OFF,1-255MIN) ....0
DWELL HOLD-OVER TIMER (0-255) .......0
LATCH CALL? .........................N
LINK TO NEXT PREEMPT? ...............N
ENABLE BACKUP PROTECTION? ...........N
HOLD CLEAR 1 PHASES DURING DELAY? ...N
FAST GREEN FLASH DWELL PHASES? ......N
PED CLEARANCE THROUGH YELLOW? .......N
INHIBIT OVERLAP GREEN EXTENSION? ....N
SERVICE DURING SOFTWARE FLASH? ......N
REST IN RED DURING DWELL INTERVAL? ..N
FLASH DWELL INTERVAL? ...............N
ALLOW PEDS IN DWELL INTERVAL? .......N
RE-TIME DWELL INTERVAL? .............N
OVERLAPS:              | ABCDEFGHIJKLMNOP
DWELL INT FLASH YELLOW |
 OMIT OVERLAPS:        |    X
```

PRESS 'NEXT'

```
   PREEMPTION  #4  SETTINGS (NEXT:1-10)
INTERVAL/TIMING  |  CLEAR/DWELL PHASES
  GRN YEL  RED   |12345678910111213141516
1 255  0.0* 0.0* | X    X
2   0  0.0  0.0  |
3   0  0.0  0.0  |
4   0  0.0  0.0  |
5   1  0.0  0.0  | X   X
EXIT CALLS       |
          OPTIONS
PRIORITY (Y/N TO SELECT) ............MED
DELAY TIMER (0-255 SEC) .............0
MIN GREEN BEFORE PRE (0= DEFAULT)....1
PED CLEAR BEFORE PRE (0= DEFAULT)....0
YELLOW CLEAR BEFORE PRE (0= DEFAULT).0.0*
RED CLEAR BEFORE PRE (0= DEFAULT)....0.0*
DWELL MIN TIMER (0-255 SEC) .........12
DWELL MAX TIMER (0=OFF,1-255MIN) ....0
DWELL HOLD-OVER TIMER (0-255) .......0
LATCH CALL? .........................N
LINK TO NEXT PREEMPT? ...............N
ENABLE BACKUP PROTECTION? ...........N
HOLD CLEAR 1 PHASES DURING DELAY? ...N
FAST GREEN FLASH DWELL PHASES? ......N
PED CLEARANCE THROUGH YELLOW? .......N
INHIBIT OVERLAP GREEN EXTENSION? ....N
SERVICE DURING SOFTWARE FLASH? ......N
REST IN RED DURING DWELL INTERVAL? ..N
FLASH DWELL INTERVAL? ...............N
ALLOW PEDS IN DWELL INTERVAL? .......N
RE-TIME DWELL INTERVAL? .............N
OVERLAPS:              | ABCDEFGHIJKLMNOP
DWELL INT FLASH YELLOW |
OMIT OVERLAPS:         | X
```

PRESS 'NEXT'

* TIME DEFAULTS TO TIME USED BY PHASE DURING NORMAL OPERATION

NOTE!
PROGRAM EXTEND TIME ON ALL 'OPTICAL' DETECTOR UNITS FOR 2 SEC.

```
   PREEMPTION  #5  SETTINGS (NEXT:1-10)
INTERVAL/TIMING  |  CLEAR/DWELL PHASES
  GRN YEL  RED   |12345678910111213141516
1 255  0.0* 0.0* |   X  X
2   0  0.0  0.0  |
3   0  0.0  0.0  |
4   0  0.0  0.0  |
5   1  0.0  0.0  |    X   X
EXIT CALLS       |
          OPTIONS
PRIORITY (Y/N TO SELECT) ............MED
DELAY TIMER (0-255 SEC) .............0
MIN GREEN BEFORE PRE (0= DEFAULT)....1
PED CLEAR BEFORE PRE (0= DEFAULT)....0
YELLOW CLEAR BEFORE PRE (0= DEFAULT).0.0*
RED CLEAR BEFORE PRE (0= DEFAULT)....0.0*
DWELL MIN TIMER (0-255 SEC) .........7
DWELL MAX TIMER (0=OFF,1-255MIN) ....0
DWELL HOLD-OVER TIMER (0-255) .......0
LATCH CALL? .........................N
LINK TO NEXT PREEMPT? ...............N
ENABLE BACKUP PROTECTION? ...........N
HOLD CLEAR 1 PHASES DURING DELAY? ...N
FAST GREEN FLASH DWELL PHASES? ......N
PED CLEARANCE THROUGH YELLOW? .......N
INHIBIT OVERLAP GREEN EXTENSION? ....N
SERVICE DURING SOFTWARE FLASH? ......N
REST IN RED DURING DWELL INTERVAL? ..N
FLASH DWELL INTERVAL? ...............N
ALLOW PEDS IN DWELL INTERVAL? .......N
RE-TIME DWELL INTERVAL? .............N
OVERLAPS:              | ABCDEFGHIJKLMNOP
DWELL INT FLASH YELLOW |
OMIT OVERLAPS:         |  X
```

PRESS 'NEXT'

```
   PREEMPTION  #6  SETTINGS (NEXT:1-10)
INTERVAL/TIMING  |  CLEAR/DWELL PHASES
  GRN YEL  RED   |12345678910111213141516
1 255  0.0* 0.0* |  X    X
2   0  0.0  0.0  |
3   0  0.0  0.0  |
4   0  0.0  0.0  |
5   1  0.0  0.0  |   X   X
EXIT CALLS       |
          OPTIONS
PRIORITY (Y/N TO SELECT) ............MED
DELAY TIMER (0-255 SEC) .............0
MIN GREEN BEFORE PRE (0= DEFAULT)....1
PED CLEAR BEFORE PRE (0= DEFAULT)....0
YELLOW CLEAR BEFORE PRE (0= DEFAULT).0.0*
RED CLEAR BEFORE PRE (0= DEFAULT)....0.0*
DWELL MIN TIMER (0-255 SEC) .........7
DWELL MAX TIMER (0=OFF,1-255MIN) ....0
DWELL HOLD-OVER TIMER (0-255) .......0
LATCH CALL? .........................N
LINK TO NEXT PREEMPT? ...............N
ENABLE BACKUP PROTECTION? ...........N
HOLD CLEAR 1 PHASES DURING DELAY? ...N
FAST GREEN FLASH DWELL PHASES? ......N
PED CLEARANCE THROUGH YELLOW? .......N
INHIBIT OVERLAP GREEN EXTENSION? ....N
SERVICE DURING SOFTWARE FLASH? ......N
REST IN RED DURING DWELL INTERVAL? ..N
FLASH DWELL INTERVAL? ...............N
ALLOW PEDS IN DWELL INTERVAL? .......N
RE-TIME DWELL INTERVAL? .............N
OVERLAPS:              | ABCDEFGHIJKLMNOP
DWELL INT FLASH YELLOW |
OMIT OVERLAPS:         |    X
```

PROGRAMMING COMPLETE

FLASHER CIRCUIT MODIFICATION DETAIL

IN ORDER TO INSURE THAT SIGNALS FLASH CONCURRENTLY ON THE SAME APPROACH, MAKE THE FOLLOWING FLASHER CIRCUIT CHANGES:

1. ON REAR OF PDA - REMOVE WIRE FROM TERM. T2-4 AND TERMINATE ON T2-2.
2. ON REAR OF PDA - REMOVE WIRE FROM TERM. T2-5 AND TERMINATE ON T2-3.
3. REMOVE FLASHER UNIT 2.

THE CHANGES LISTED ABOVE TIES ALL PHASES AND OVERLAPS TO FLASHER UNIT 1.

OVERLAP PROGRAMMING DETAIL

(program controller as shown below)

FROM MAIN MENU PRESS '8' (OVERLAPS), THEN '1' (VEHICLE OVERLAP SETTINGS).

```
 PAGE 1: VEHICLE OVERLAP 'A' SETTINGS
 PHASE:              |12345678910111213141516
VEH OVL PARENTS:     |X       X
VEH OVL NOT VEH:     |
VEH OVL NOT PED:     |
VEH OVL GRN EXT:     |
STARTUP COLOR: _ RED  _ YELLOW  _ GREEN
FLASH COLORS:  _ RED  _ YELLOW  X GREEN
SELECT VEHICLE OVERLAP OPTIONS:   (Y/N)
FLASH YELLOW IN CONTROLLER FLASH?...N
GREEN EXTENSION (0-255 SEC).........0
YELLOW CLEAR (0=PARENT,3-25.5 SEC)..0.0
RED CLEAR (0=PARENT,0.1-25.5 SEC)...0.0
OUTPUT AS PHASE # (0=NONE, 1-16)....0
```

← NOTICE GREEN FLASH

PRESS '+'

```
 PAGE 1: VEHICLE OVERLAP 'B' SETTINGS
 PHASE:              |12345678910111213141516
VEH OVL PARENTS:     |    XX
VEH OVL NOT VEH:     |
VEH OVL NOT PED:     |
VEH OVL GRN EXT:     |
STARTUP COLOR: _ RED  _ YELLOW  _ GREEN
FLASH COLORS:  _ RED  _ YELLOW  X GREEN
SELECT VEHICLE OVERLAP OPTIONS:   (Y/N)
FLASH YELLOW IN CONTROLLER FLASH?...Y
GREEN EXTENSION (0-255 SEC).........0
YELLOW CLEAR (0=PARENT,3-25.5 SEC)..0.0
RED CLEAR (0=PARENT,0.1-25.5 SEC)...0.0
OUTPUT AS PHASE # (0=NONE, 1-16)....0
```

← NOTICE GREEN FLASH

PRESS '+'

```
 PAGE 1: VEHICLE OVERLAP 'C' SETTINGS
 PHASE:              |12345678910111213141516
VEH OVL PARENTS:     |   XX
VEH OVL NOT VEH:     |
VEH OVL NOT PED:     |
VEH OVL GRN EXT:     |
STARTUP COLOR: _ RED  _ YELLOW  _ GREEN
FLASH COLORS:  _ RED  _ YELLOW  X GREEN
SELECT VEHICLE OVERLAP OPTIONS:   (Y/N)
FLASH YELLOW IN CONTROLLER FLASH?...N
GREEN EXTENSION (0-255 SEC).........0
YELLOW CLEAR (0=PARENT,3-25.5 SEC)..0.0
RED CLEAR (0=PARENT,0.1-25.5 SEC)...0.0
OUTPUT AS PHASE # (0=NONE, 1-16)....0
```

← NOTICE GREEN FLASH

PRESS '+'

```
 PAGE 1: VEHICLE OVERLAP 'D' SETTINGS
 PHASE:              |12345678910111213141516
VEH OVL PARENTS:     | XX
VEH OVL NOT VEH:     |
VEH OVL NOT PED:     |
VEH OVL GRN EXT:     |
STARTUP COLOR: _ RED  _ YELLOW  _ GREEN
FLASH COLORS:  _ RED  _ YELLOW  X GREEN
SELECT VEHICLE OVERLAP OPTIONS:   (Y/N)
FLASH YELLOW IN CONTROLLER FLASH?...Y
GREEN EXTENSION (0-255 SEC).........0
YELLOW CLEAR (0=PARENT,3-25.5 SEC)..0.0
RED CLEAR (0=PARENT,0.1-25.5 SEC)...0.0
OUTPUT AS PHASE # (0=NONE, 1-16)....0
```

← NOTICE GREEN FLASH

OVERLAP PROGRAMMING COMPLETE

THIS ELECTRICAL DETAIL IS FOR THE SIGNAL DESIGN: 03-0384
DESIGNED: NOVEMBER 2017
SEALED: 4-11-18
REVISED: N/A

Electrical Detail - Sheet 2 of 2
Signal Upgrade - Final

DOCUMENT NOT CONSIDERED FINAL UNLESS ALL SIGNATURES COMPLETED

ELECTRICAL AND PROGRAMMING DETAILS FOR:

Prepared for: NCDOT Traffic Engineering Branch, Congestion Mobility and Safety Division, Systems Management Section

750 N.Greenfield Pkwy,Garner,NC 27529

SR 1308 (Gum Branch Road)
at
NC 53 / SR 2071 (Western Blvd)

Division 03 | Onslow Co. | Jacksonville

PLAN DATE:	November 2017	REVIEWED BY:	T.R. Terrell
PREPARED BY:	J.A. Wagner	REVIEWED BY:	N.R. Simmons

REVISIONS	INIT.	DATE

SEAL
NORTH CAROLINA PROFESSIONAL SEAL 031464 ENGINEER NATASHA R. SIMMONS

DocuSigned by: Natasha R. Simmons 4/11/2018
SIGNATURE DATE

SIG. INVENTORY NO. 03-0384

HNTB NORTH CAROLINA, P.C.
343 E. Six Forks Road, Suite 200
Raleigh, North Carolina 27609
NC License No: C-1554
(919) 546-8997

DocuSign Envelope ID: A80F2234-B4CF-4A7A-8A1D-E9CAA5762171

METAL POLE No. 1,2

PROJECT REFERENCE NO.	SHEET NO.
U-5319	Sig. 3.3

Design Loading for METAL POLE NO. 1

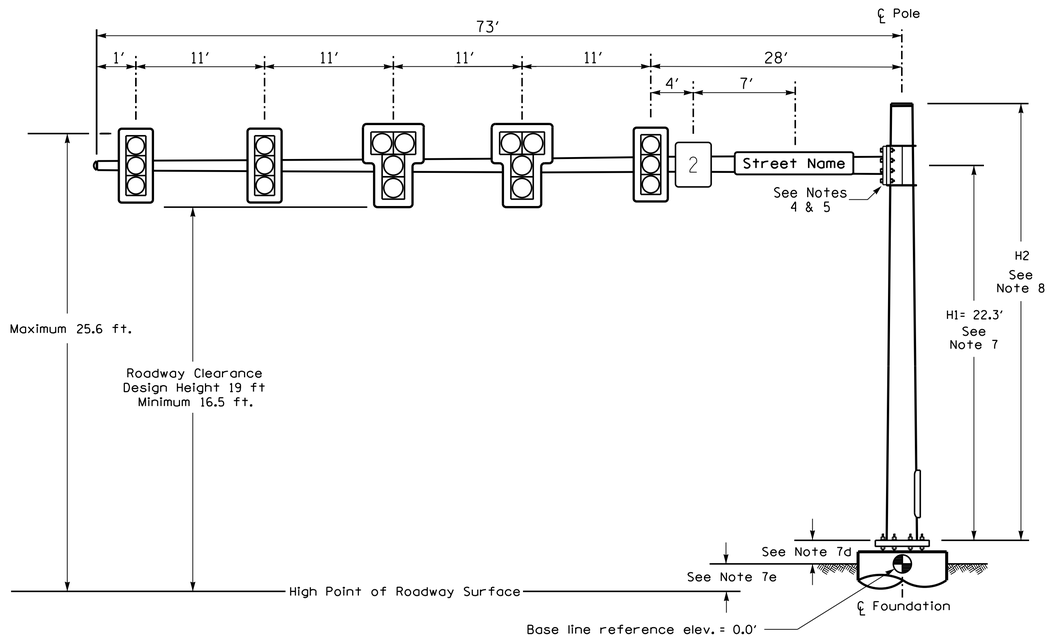

Elevation View

Design Loading for METAL POLE NO. 2

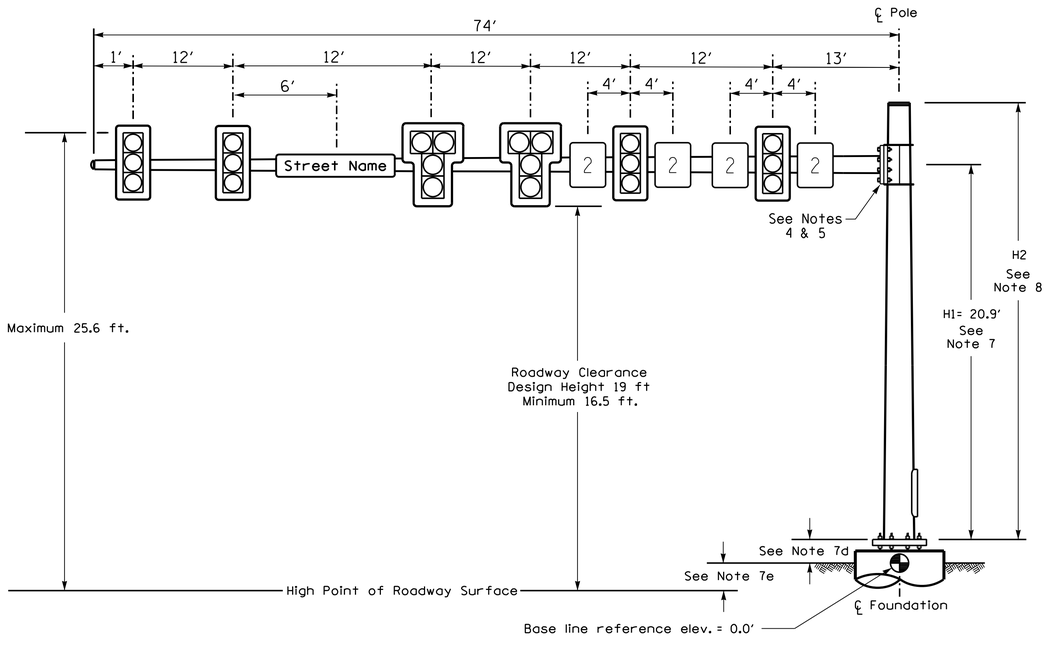

Elevation View

SPECIAL NOTE

The contractor is responsible for verifying that the mast arm attachment height (H1) will provide the "Design Height" clearance from the roadway before submitting final shop drawings for approval. Verify elevation data below which was obtained by field measurement or from available project survey data.

Elevation Data for Mast Arm Attachment (H1)

Elevation Differences for:	Pole 1	Pole 2
Baseline reference point at ⊕ Foundation @ ground level	0.0 ft.	0.0 ft.
Elevation difference at High point of roadway surface	+1.76 ft.	+0.27 ft.
Elevation difference at Edge of travelway or face of curb	+0.16 ft.	-0.29 ft.

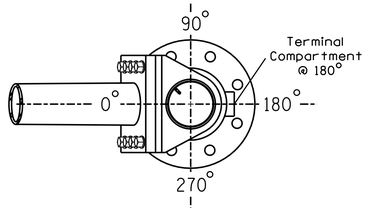

POLE RADIAL ORIENTATION

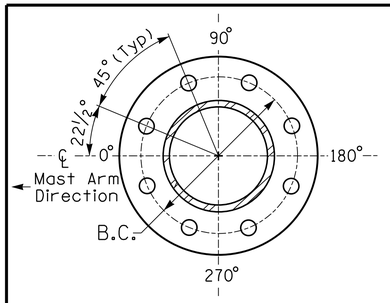

8 BOLT BASE PLATE DETAIL

See Note 6

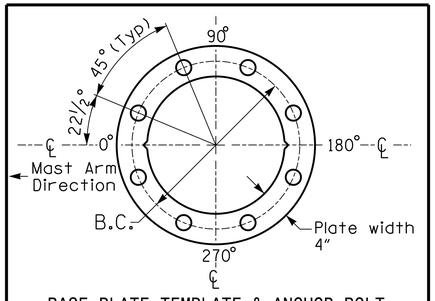

BASE PLATE TEMPLATE & ANCHOR BOLT LOCK PLATE DETAIL

For 8 Bolt Base Plate

MAST ARM LOADING SCHEDULE

LOADING SYMBOL	DESCRIPTION	AREA	SIZE	WEIGHT
	RIGID MOUNTED SIGNAL HEAD 12″-3 SECTION-WITH BACKPLATE	9.3 S.F.	25.5″W X 52.5″L	60 LBS
	RIGID MOUNTED SIGNAL HEAD 12″-4 SECTION-WITH BACKPLATE	16.3 S.F.	42.0″W X 56.0″L	90 LBS
2	SIGN RIGID MOUNTED	7.5 S.F.	30.0″W X 36.0″L	14 LBS
Street Name	STREET NAME SIGN RIGID MOUNTED	16.0 S.F.	24.0″W X 96.0″L	36 LBS

NOTES

DESIGN REFERENCE MATERIAL

1. Design the traffic signal structure and foundation in accordance with:
   - The 6th Edition 2013 AASHTO "Standard Specifications for Structural Supports for Highway Signs, Luminaires, and Traffic Signals, including all of the latest interim revisions.
   - The 2018 NCDOT "Standard Specifications for Roads and Structures." The latest addenda to the specifications can be found in the traffic signal project special provisions.
   - The 2018 NCDOT Roadway Standard Drawings.
   - The traffic signal project plans and special provisions.
   - The NCDOT "Metal Pole Standards" located at the following NCDOT website: https://connect.ncdot.gov/resources/safety/Pages/ITS-Design-Resources.aspx

DESIGN REQUIREMENTS

2. Design the traffic signal structure using the loading conditions shown in the elevation views. These are anticipated worst case "design loads" and may not represent the actual loads that will be applied at the time of the installation. The contractor should refer to the traffic signal plans for the actual loads that will be applied at the time of the installation.
3. Design all signal supports using stress ratios that do not exceed 0.9.
4. The camber design for the mast arm deflection should provide an appearance of a low pitched arch where the tip or the free end of the mast arm does not deflect below horizontal when fully loaded.
5. A clamp-type bolted mast arm-to-pole connection may be used instead of the welded ring stiffened box connection shown as long as the connection meets all of the design requirements.
6. Design base plate with 8 anchor bolt holes. Provide 2 inch x 60 inch anchor bolts.
7. The mast arm attachment height (H1) shown is based on the following design assumptions:
   a. Mast arm slope and deflection are not considered in determining the arm attachment height as they are assumed to offset each other.
   b. Signal heads are rigidly mounted and vertically centered on the mast arm.
   c. The roadway clearance height for design is as shown in the elevation views.
   d. The top of the pole base plate is 0.75 feet above the ground elevation.
   e. Refer to the Elevation Data Chart for the elevation differences between the proposed foundation ground level and the high point of the roadway.
8. The pole manufacturer will determine the total height (H2) of each pole using the greater of the following:
   - Mast arm attachment height (H1) plus 2 feet, or
   - H1 plus 1/2 of the total height of the mast arm attachment assembly plus 1 foot.
9. If pole location adjustments are required, the contractor must gain approval from the Engineer as this may affect the mast arm lengths and arm attachment heights. The contractor may contact the Signal Design Section Senior Structural Engineer for assistance at (919) 814-4929.
10. The contractor is responsible for verifying that the mast arm length shown will allow proper positioning of the signal heads over the roadway.
11. The contractor is responsible for providing soil penetration testing data (SPT) to the pole manufacturer so site specific foundations can be designed.

All metal poles and arms should be BLACK in color as specified in the project special provisions.

NCDOT Wind Zone 2 (130 mph)

DOCUMENT NOT CONSIDERED FINAL UNLESS ALL SIGNATURES COMPLETED

HNTB NORTH CAROLINA, P.C.
343 E. Six Forks Road, Suite 200
Raleigh, North Carolina 27609
NC License No: C-1554
(919) 546-8997

Prepared In the Offices of:
Transportation Mobility and Safety Division
NORTH CAROLINA DEPARTMENT OF TRANSPORTATION
Signal Design Section
750 N.Greenfield Pkwy.Garner,NC 27529

SR 1308 (Gum Branch Road)
at
NC 53 / SR 2071 (Western Blvd)

Division 03 | Onslow Co. | Jacksonville

PLAN DATE: January 2018 | REVIEWED BY: T.R. Terrell
PREPARED BY: A.H. Thornburg | REVIEWED BY: N.R. Simmons

SCALE: 0 N/A N/A

REVISIONS	INIT.	DATE

SEAL
NORTH CAROLINA PROFESSIONAL SEAL 031464 ENGINEER NATASHA R. SIMMONS

DocuSigned by: Natasha R. Simmons 4/11/2018
SIGNATURE DATE

SIG. INVENTORY NO. 03-0384

DocuSign Envelope ID: A80F2234-B4CF-4A7A-8A1D-E9CAA5762171

Design Loading for METAL POLE NO. 3

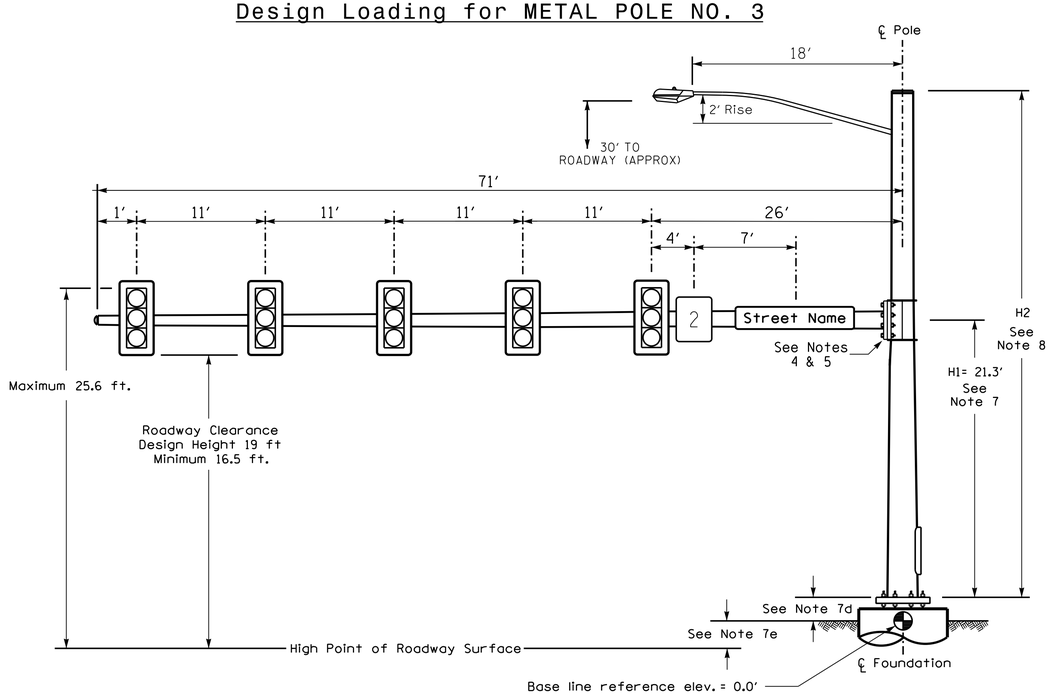

Elevation View

Design Loading for METAL POLE NO. 4

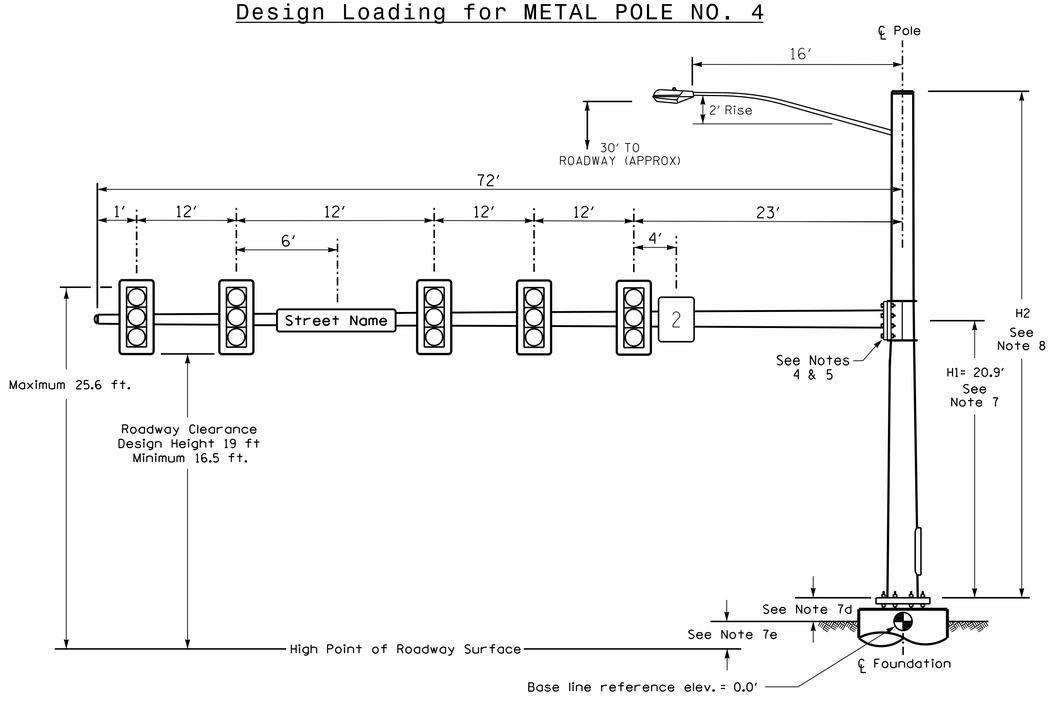

Elevation View

SPECIAL NOTE

The contractor is responsible for verifying that the mast arm attachment height (H1) will provide the "Design Height" clearance from the roadway before submitting final shop drawings for approval. Verify elevation data below which was obtained by field measurement or from available project survey data.

Elevation Data for Mast Arm Attachment (H1)

Elevation Differences for:	Pole 3	Pole 4
Baseline reference point at ℄ Foundation @ ground level	0.0 ft.	0.0 ft.
Elevation difference at High point of roadway surface	+0.89 ft.	+0.47 ft.
Elevation difference at Edge of travelway or face of curb	+0.36 ft.	-0.28 ft.

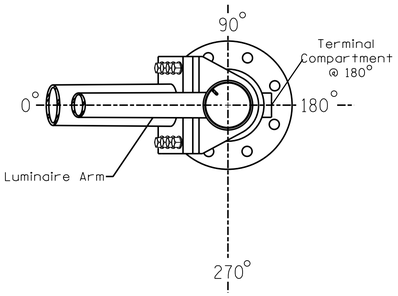

POLE RADIAL ORIENTATION

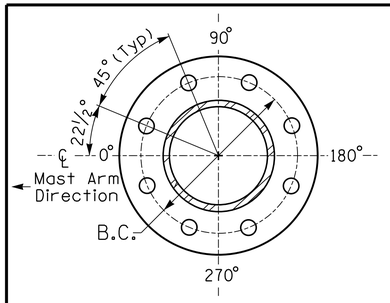

8 BOLT BASE PLATE DETAIL

See Note 6

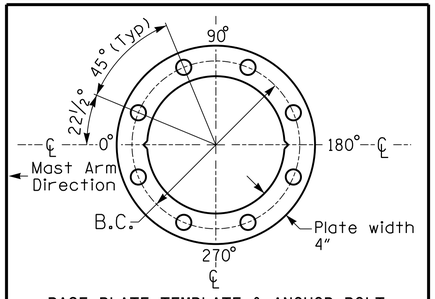

BASE PLATE TEMPLATE & ANCHOR BOLT LOCK PLATE DETAIL

For 8 Bolt Base Plate

HNTB NORTH CAROLINA, P.C.
343 E. Six Forks Road, Suite 200
Raleigh, North Carolina 27609
NC License No: C-1554
(919) 546-8997

METAL POLE No. 3,4

PROJECT REFERENCE NO.	SHEET NO.
U-5319	Sig. 3.4

MAST ARM LOADING SCHEDULE

LOADING SYMBOL	DESCRIPTION	AREA	SIZE	WEIGHT
	RIGID MOUNTED SIGNAL HEAD 12"-3 SECTION-WITH BACKPLATE	9.3 S.F.	25.5"W X 52.5"L	60 LBS
2	SIGN RIGID MOUNTED	7.5 S.F.	30.0"W X 36.0"L	14 LBS
Street Name	STREET NAME SIGN RIGID MOUNTED	16.0 S.F.	24.0"W X 96.0"L	36 LBS
	LUMINAIRE	EPA 0.87 S.F.	13.25"W X 26.25"L	35 LBS

NOTES

DESIGN REFERENCE MATERIAL

1. Design the traffic signal structure and foundation in accordance with:
   - The 6th Edition 2013 AASHTO "Standard Specifications for Structural Supports for Highway Signs, Luminaires, and Traffic Signals, including all of the latest interim revisions.
   - The 2018 NCDOT "Standard Specifications for Roads and Structures." The latest addenda to the specifications can be found in the traffic signal project special provisions.
   - The 2018 NCDOT Roadway Standard Drawings.
   - The traffic signal project plans and special provisions.
   - The NCDOT "Metal Pole Standards" located at the following NCDOT website: https://connect.ncdot.gov/resources/safety/Pages/ITS-Design-Resources.aspx

DESIGN REQUIREMENTS

2. Design the traffic signal structure using the loading conditions shown in the elevation views. These are anticipated worst case "design loads" and may not represent the actual loads that will be applied at the time of the installation. The contractor should refer to the traffic signal plans for the actual loads that will be applied at the time of the installation.
3. Design all signal supports using stress ratios that do not exceed 0.9.
4. The camber design for the mast arm deflection should provide an appearance of a low pitched arch where the tip or the free end of the mast arm does not deflect below horizontal when fully loaded.
5. A clamp-type bolted mast arm-to-pole connection may be used instead of the welded ring stiffened box connection shown as long as the connection meets all of the design requirements.
6. Design base plate with 8 anchor bolt holes. Provide 2 inch x 60 inch anchor bolts.
7. The mast arm attachment height (H1) shown is based on the following design assumptions:
   a. Mast arm slope and deflection are not considered in determining the arm attachment height as they are assumed to offset each other.
   b. Signal heads are rigidly mounted and vertically centered on the mast arm.
   c. The roadway clearance height for design is as shown in the elevation views.
   d. The top of the pole base plate is 0.75 feet above the ground elevation.
   e. Refer to the Elevation Data Chart for the elevation differences between the proposed foundation ground level and the high point of the roadway.
8. The pole manufacturer will determine the total height (H2) of each pole X based on the luminaire height requirement of 30 ft.
9. If pole location adjustments are required, the contractor must gain approval from the Engineer as this may affect the mast arm lengths and arm attachment heights. The contractor may contact the Signal Design Section Senior Structural Engineer for assistance at (919) 814-4929.
10. The contractor is responsible for verifying that the mast arm length shown will allow proper positioning of the signal heads over the roadway.
11. The contractor is responsible for providing soil penetration testing data (SPT) to the pole manufacturer so site specific foundations can be designed.
12. Comply with NEC code 230.2(E) concerning service equipment disconnect.
13. Lighting fixture and luminaire arm represent a load condition to the pole and may not represent exactly how the fixtures will be mounted. The contractor is responsible for ensuring that any required factory preps for mounting fixtures to the pole are included on the shop drawings.
14. Design the luminaire support arm using design dimensions as shown on elevations views. Refer to the Radial Orientation Detail for attachment to the signal pole. Design arm end for a nominal 2 inch slip fit socket connection for light assembly.

All metal poles and arms should be BLACK in color as specified in the project special provisions.

NCDOT Wind Zone 2 (130 mph)

DOCUMENT NOT CONSIDERED FINAL UNLESS ALL SIGNATURES COMPLETED

Prepared In the Offices of:
Transportation Mobility and Safety Division
NORTH CAROLINA DEPARTMENT OF TRANSPORTATION
Signal Design Section
750 N.Greenfield Pkwy.Garner,NC 27529

SR 1308 (Gum Branch Road)
at
NC 53 / SR 2071 (Western Blvd)

Division 03 Onslow Co. Jacksonville

PLAN DATE: January 2018 REVIEWED BY: T.R. Terrell

PREPARED BY: A.H. Thornburg REVIEWED BY: N.R. Simmons

SCALE: 0 N/A N/A

REVISIONS	INIT.	DATE

SEAL
NORTH CAROLINA PROFESSIONAL SEAL 031464 ENGINEER NATASHA R. SIMMONS

DocuSigned by: Natasha R. Simmons 4/11/2018
SIGNATURE DATE

SIG. INVENTORY NO. 03-0384

DocuSign Envelope ID: A80F2234-B4CF-4A7A-8A1D-E9CAA5762171

POLE STANDARDS

NCDOT METAL POLES

STATE OF NORTH CAROLINA
DIVISION OF HIGHWAYS

PROJECT I.D. NO.	SHEET NO.
U-5319	Sig.M1

STANDARD DRAWINGS FOR ALL METAL POLES

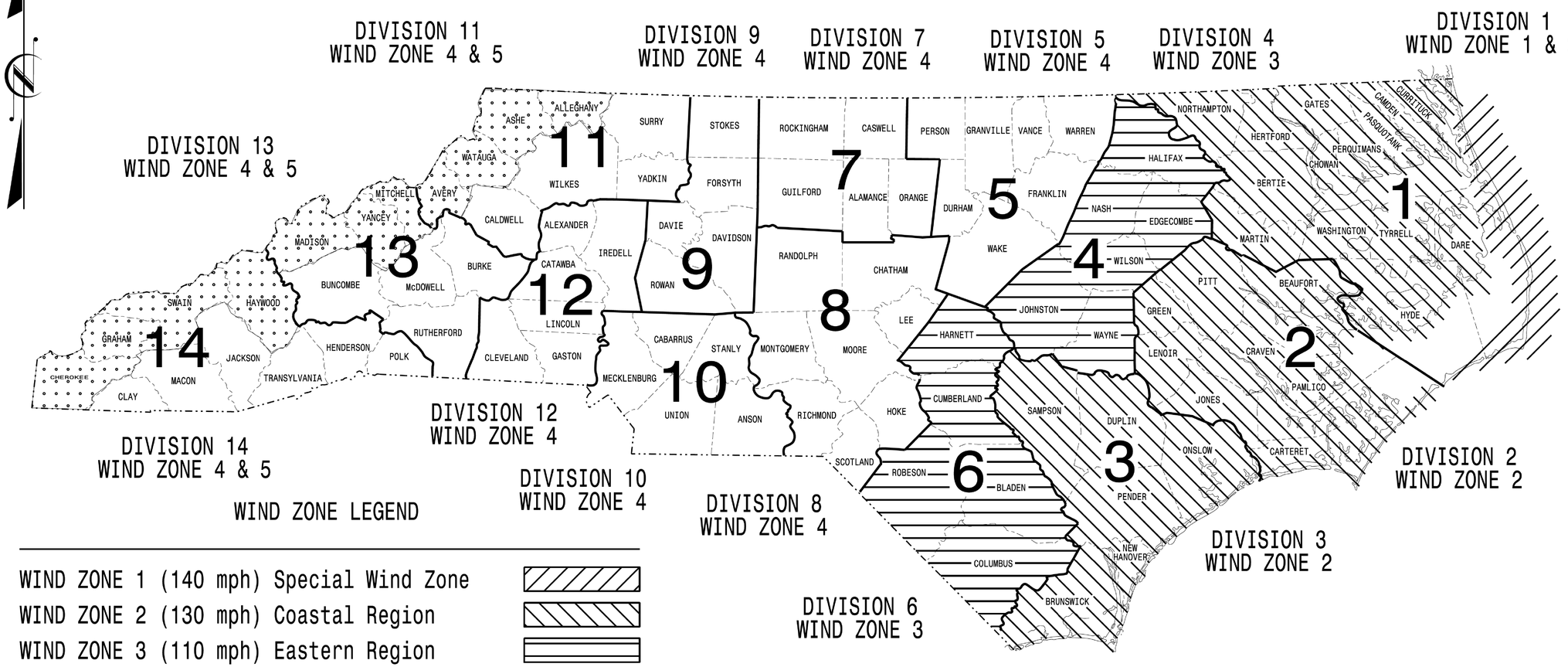

WIND ZONE LEGEND

WIND ZONE 1 (140 mph) Special Wind Zone	
WIND ZONE 2 (130 mph) Coastal Region	
WIND ZONE 3 (110 mph) Eastern Region	
WIND ZONE 4 (90 mph) Central & Mtn. Region	
WIND ZONE 5 (120 mph) Special Wind Zone	

https://connect.ncdot.gov/resources/safety/Pages/ITS-Design-Resources.aspx

Prepared In the Offices of:

Transportation Mobility and Safety Division
Signal Design Section
750 N.Greenfield Pkwy.
Garner,NC 27529

Designed in conformance with the latest 2015 Interim to the 6th Edition 2013

AASHTO

Standard Specifications for Structural Supports for Highway Signs, Luminaires, and Traffic Signals

INDEX OF PLANS

DRAWING NUMBER	DESCRIPTION
Sig. M 1	Statewide Wind Zone Map
Sig. M 2	Typical Fabrication Details–All Metal Poles
Sig. M 3	Typical Fabrication Details–Strain Poles
Sig. M 4	Typical Fabrication Details–Mast Arm Poles
Sig. M 5	Typical Fabrication Details–Mast Arm Connection
Sig. M 6	Typical Fabrication Details–Strain Pole Attachments
Sig. M 7	Construction Details–Foundations
Sig. M 8	Standard Strain Pole Foundation–All Soil Conditions

NCDOT CONTACTS:

MOBILITY AND SAFETY DIVISION – ITS AND SIGNALS UNIT

M.M. MCDIARMID, P.E. – STATE ITS AND SIGNALS ENGINEER

J. P. GALLOWAY, P.E. – STATE SIGNALS ENGINEER

D.C. SARKAR, P.E. – ITS AND SIGNALS SENIOR STRUCTURAL ENGINEER

SEAL

NORTH CAROLINA PROFESSIONAL SEAL 028094 ENGINEER DEBESH C. SARKAR

DocuSigned by: Debesh C. Sarkar
SIGNATURE

10/11/2017
DATE

DocuSign Envelope ID: A80F2234-B4CF-4A7A-8A1D-E9CAA5762171

PROJECT ID. NO.	SHEET NO.
U-5319	Sig.M2

Fabrication Details – All Metal Poles

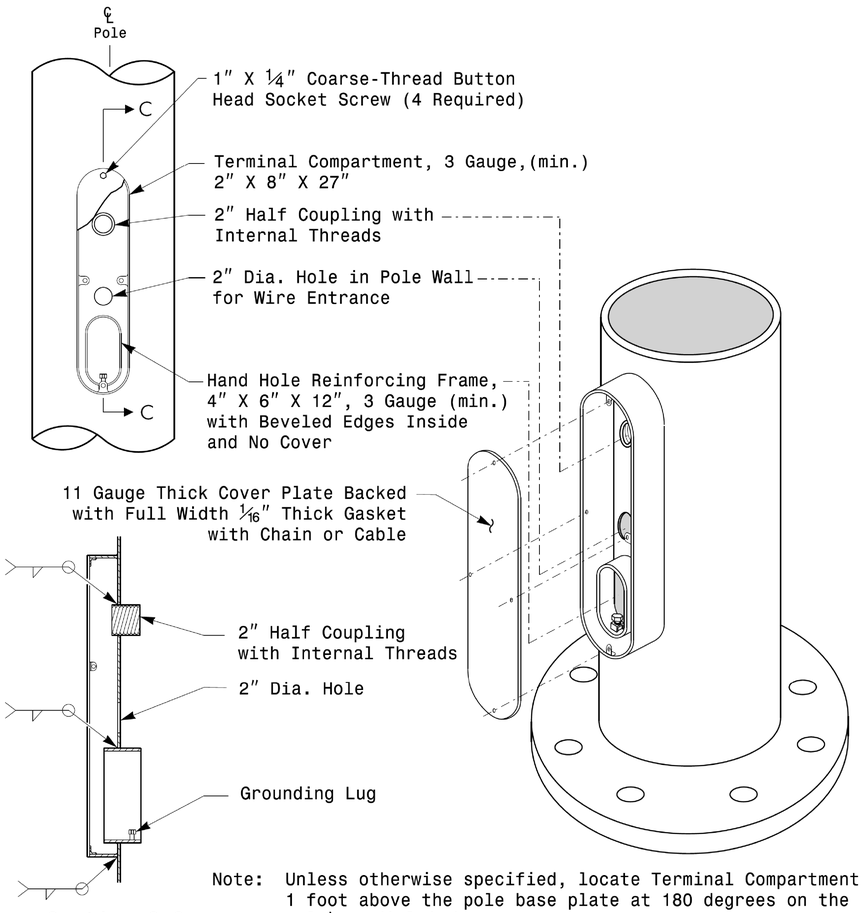

Section C-C

Note: Unless otherwise specified, locate Terminal Compartment 1 foot above the pole base plate at 180 degrees on the pole's radial index.

Terminal Compartment Detail

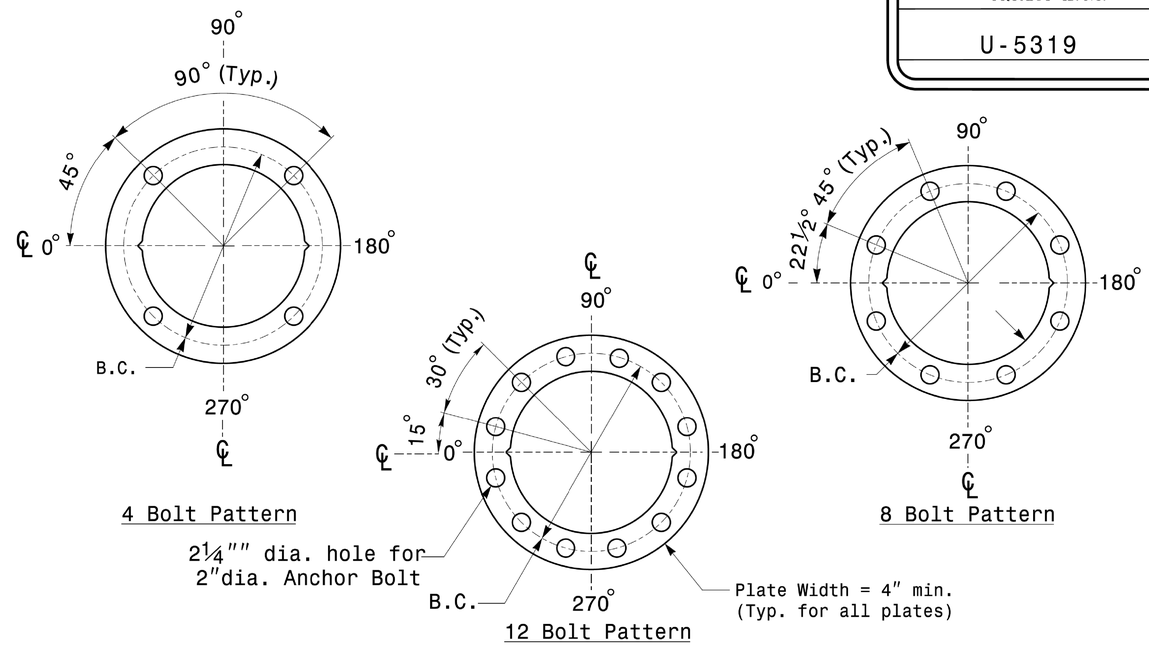

Construct Templates and Plates from ¼" min. thick Steel. Galvanizing is not required.

Base Plate Template and Anchor Bolt Lock Plate Details

MFG _____	MFG. DATE: MM/YY
SHAFT D/T/L/Y	----/----/----/----
ARM-A D/T/L/Y	----/----/----/----
	----/----/----/----
ARM-B D/T/L/Y	----/----/----/----
	----/----/----/----
A.B. DIA./B.C./L/Y	----/----/----/----
NCDOT SIG. INV. NO.	_____
NCDOT POLE NO.	_____

Shaft I.D. Tag
(Provide on Shaft of Strain Poles and Mast Arm Poles Shaft)

MFG _____	MFG. DATE: MM/YY
SECTION D/T/L/Y	----/----/----/----
NCDOT SIG. INV. NO.	_____
NCDOT POLE NO.	_____

Arm I.D. Tag
(Provide on each section of a multi-section mast arm.)

Notes:
1) D= Diameter, T= Thickness, L= Length, Y= Yield Strength
2) A.B. = Anchor Bolt
3) B.C. = Bolt Circle of Anchor Bolts
4) If Custom Design, use "NCDOT STANDARD" line for Signal Inv. Number and pole I.D. number
5) See drawing M3 and M4 for mounting positions of I.D. tags.

Identification Tag Details

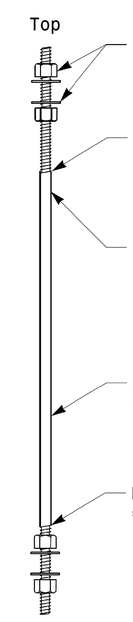

Provide 4 heavy hex nuts and 4 flat washers per anchor bolt.

Min. thread at top of bolt = 10" for 2" diameter bolt.

Galvanize a minimum of 2" below threads from top of bolt.

2" x 60" Anchor Bolt unless otherwise specified.

Min. thread at bottom of bolt = 8" Galvanization not required at bottom of bolt.

Anchor Bolt Detail

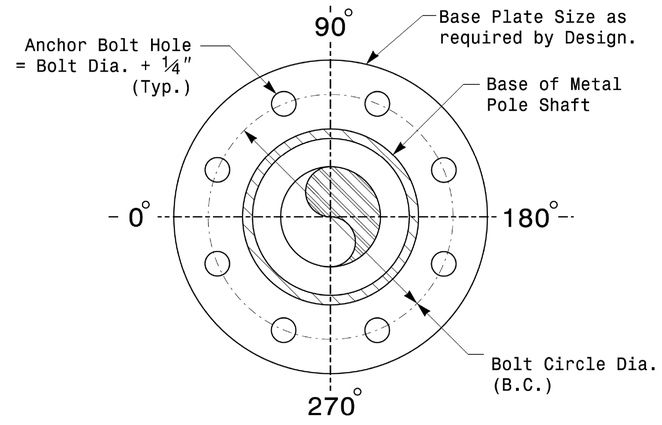

Note: Base plate may be circular,octagonal,square or rectangular in shape.

Typical Base Plate Detail

Prepared in the Offices of:
Transportation Mobility and Safety Division
STATE OF NORTH CAROLINA
DEPARTMENT OF TRANSPORTATION
Signal Design Section
750 N.Greenfield Pkwy,Garner,NC 27529

SCALE
0 NA
NONE

Typical Fabrication Details For All Metal Poles

PLAN DATE:	OCTOBER 2017	DESIGNED BY:	C.F.ANDREWS
PREPARED BY:	N. BITTING	REVIEWED BY:	D.C. SARKAR

REVISIONS	INIT.	DATE

SEAL
NORTH CAROLINA PROFESSIONAL SEAL 028094 ENGINEER DEBESH C. SARKAR

DocuSigned by: Debesh C. Sarkar
SIGNATURE
10/11/2017
DATE

DocuSign Envelope ID: A80F2234-B4CF-4A7A-8A1D-E9CAA5762171

PROJECT ID. NO.	SHEET NO.
U-5319	Sig.M4

Fabrication Details – Mast Arm Poles

Note:
1. Opening in pole base plate shall be equal to pole base inside diameter minus 3½" but shall not be less than 8½".

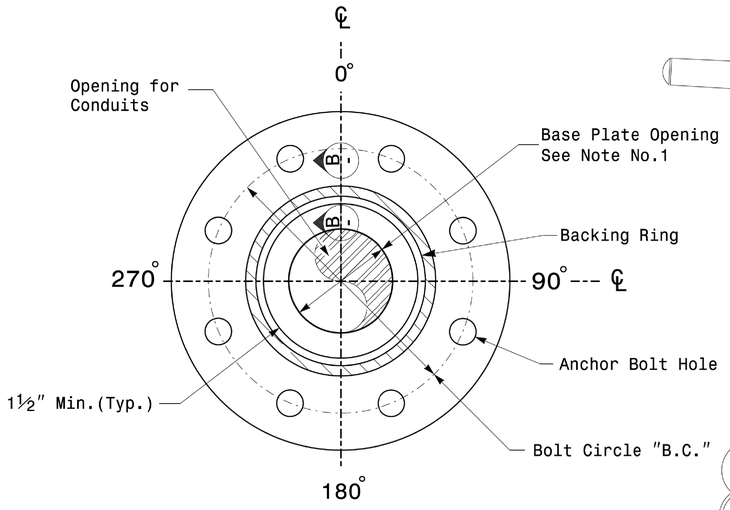

Section A-A

Pole Base Plate Details

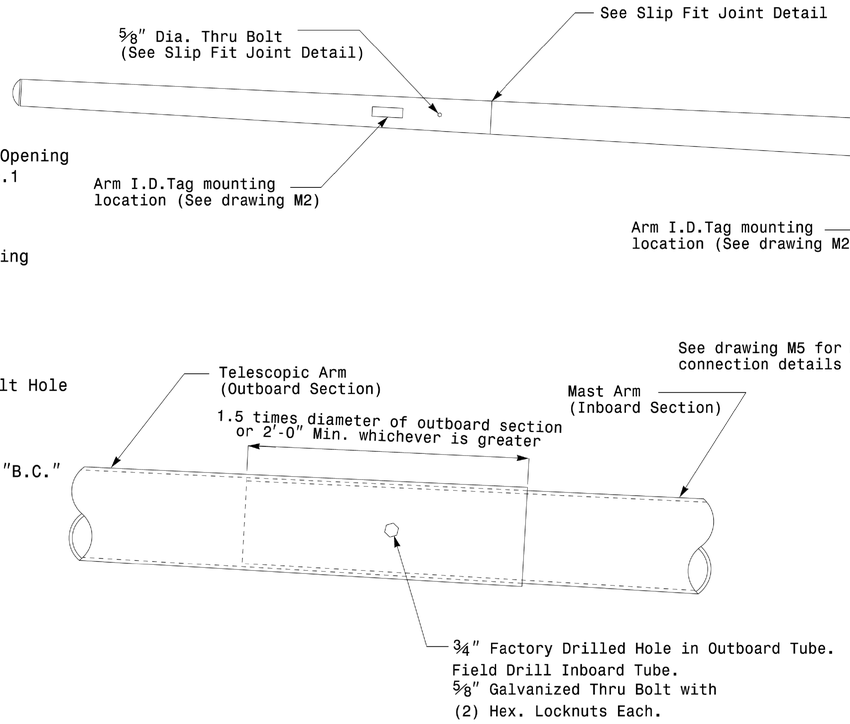

Slip Fit Joint Detail for Mast Arm

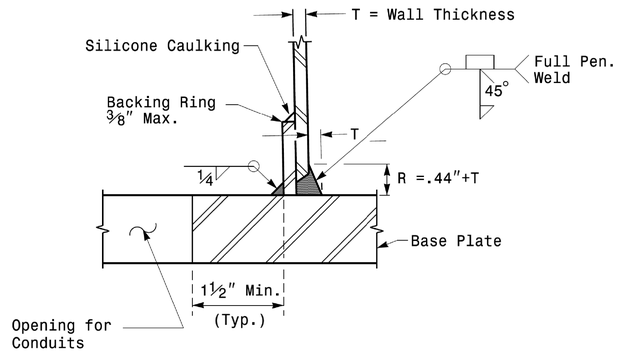

Section B-B

(Pole Attachment to Base Plate)

Full-Penetration Groove Weld Detail

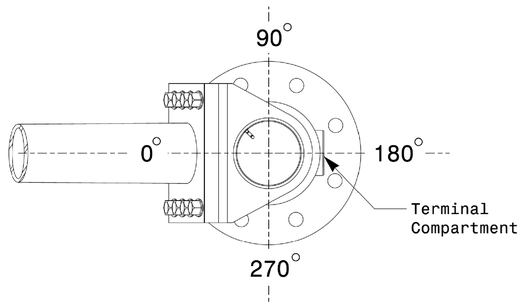

Mast Arm Radial Orientation

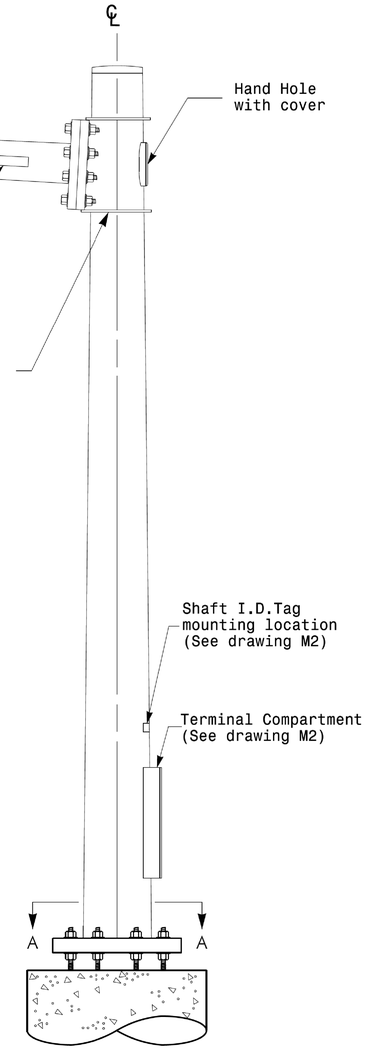

Mast Arm Pole

Prepared in the Offices of:
Transportation Mobility and Safety Division
NORTH CAROLINA DEPARTMENT OF TRANSPORTATION
Signal Design Section
750 N.Greenfield Pkwy.Garner,NC 27529

SCALE: 0 NA NONE

Typical Fabrication Details For Mast Arm Poles

PLAN DATE:	OCTOBER 2017	DESIGNED BY:	K.C.DURIGON
PREPARED BY:	N. BITTING	REVIEWED BY:	D.C. SARKAR

REVISIONS	INIT.	DATE

SEAL
NORTH CAROLINA PROFESSIONAL SEAL 028094 ENGINEER DEBESH C. SARKAR

DocuSigned by: Debesh C. Sarkar 44E8E3B2A5A1... SIGNATURE

10/11/2017 DATE

11-OCT-2017 08:33
S:\MTS&SW\ITS Signals\Signal Design Section\Eastern Region\MM Sheets\2016\2014 Sig.M4 Std. Fabrication Details-Mast Arm Poles.dgn
rmitchell

DocuSign Envelope ID: A80F2234-B4CF-4A7A-8A1D-E9CAA5762171

PROJECT ID. NO.	SHEET NO.
U-5319	Sig.M5

Welded Ring Stiffened Mast Arm Connection

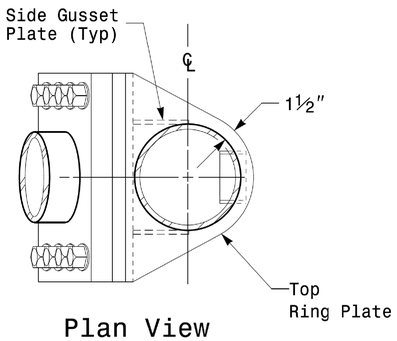

Plan View

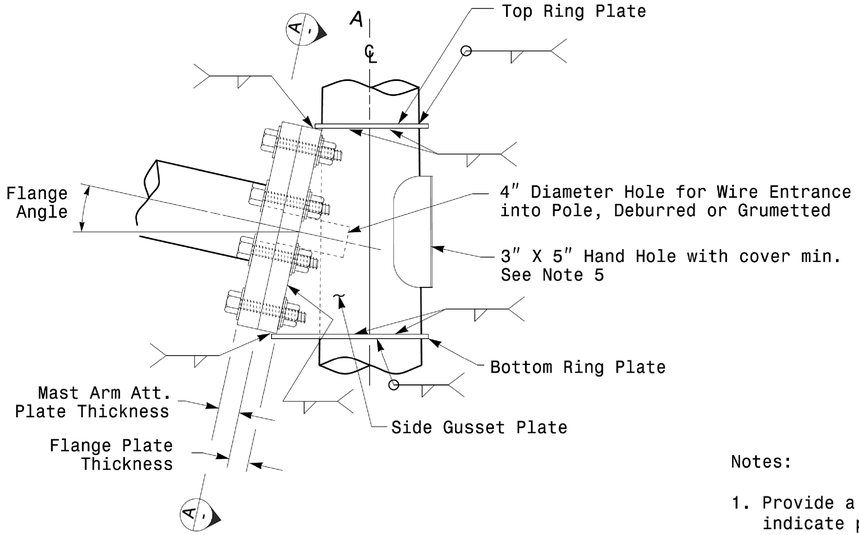

Side Elevation View

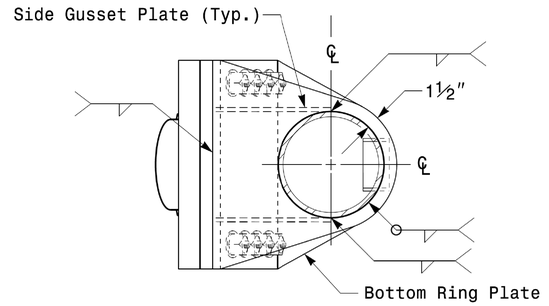

Bottom View

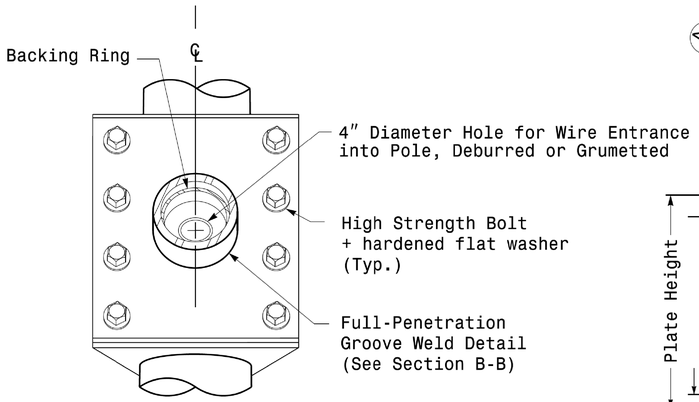

Front Elevation View

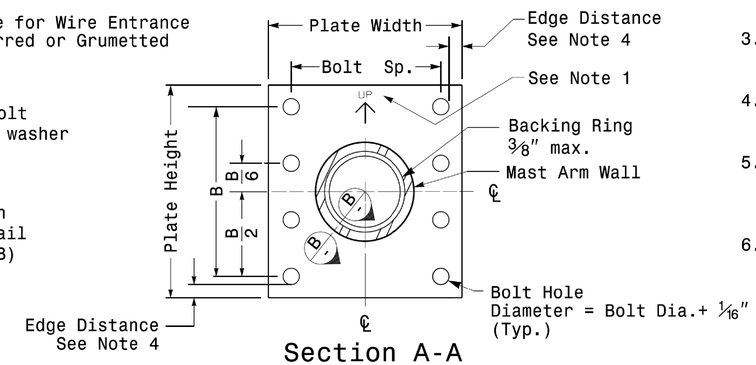

Section A-A
Mast Arm Attachment Plate

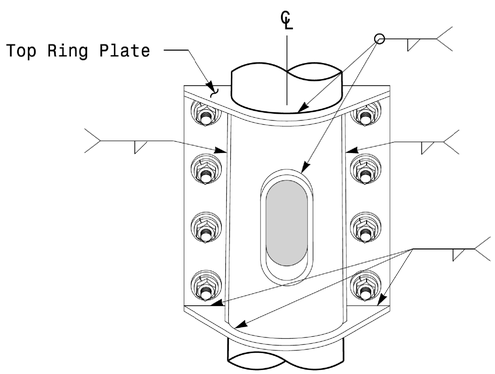

Back Elevation View

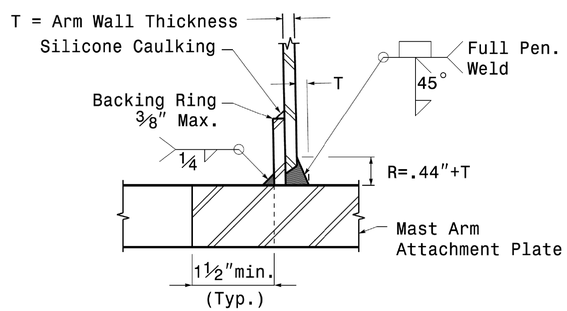

Section B-B
Full-Penetration Groove Weld Detail

Notes:

1. Provide a permanent means of identification above the mast arm to indicate proper attachment orientation of the mast arm.
2. Designer will determine the size of all structural components, plates, fasteners, and welds shown unless they are already specified.
3. Fabricator is responsible for providing appropriate holes at drainage points to drain galvanizing materials.
4. For minimum edge distance follow AISC Table J3.4 and J3.5. For nominal bolt hole size use Table J3.3.
5. Provide upper handhole as necessary when shaft extensions are reguired for luminaire arms or camera. For poles without luminaires/camera, wiring can be done through the top of pole.
6. Allowable range of flange tilt angle will vary from 0° to as required.

Fabrication Details – Mast Arm Connection

Prepared in the Offices of:
Transportation Mobility and Safety Division
STATE OF NORTH CAROLINA
DEPARTMENT OF TRANSPORTATION
Signal Design Section
750 N.Greenfield Pkwy,Garner,NC 27529

SCALE
0 NA
NONE

Typical Fabrication Details For Mast Arm Connection To Pole

PLAN DATE:	OCTOBER 2017	DESIGNED BY:	C.F.ANDREWS
PREPARED BY:	N. BITTING	REVIEWED BY:	D.C. SARKAR

REVISIONS	INIT.	DATE

SEAL
NORTH CAROLINA PROFESSIONAL SEAL 028094 ENGINEER DEBESH C. SARKAR

DocuSigned by: Debesh C. Sarkar
SIGNATURE
10/11/2017
DATE

11-OCT-2017 08:35
S:\ITS&SU\ITS Signals\Signal Design Section\Eastern Region\M Sheets\2016\2014 Sig.M5 Std. Connection Fabrication Details-Mast Arm Poles.dgn
rnzinser

DocuSign Envelope ID: A80F2234-B4CF-4A7A-8A1D-E9CAA5762171

PROJECT ID. NO.	SHEET NO.
U-5319	Sig.M7

Construction Details – Foundations

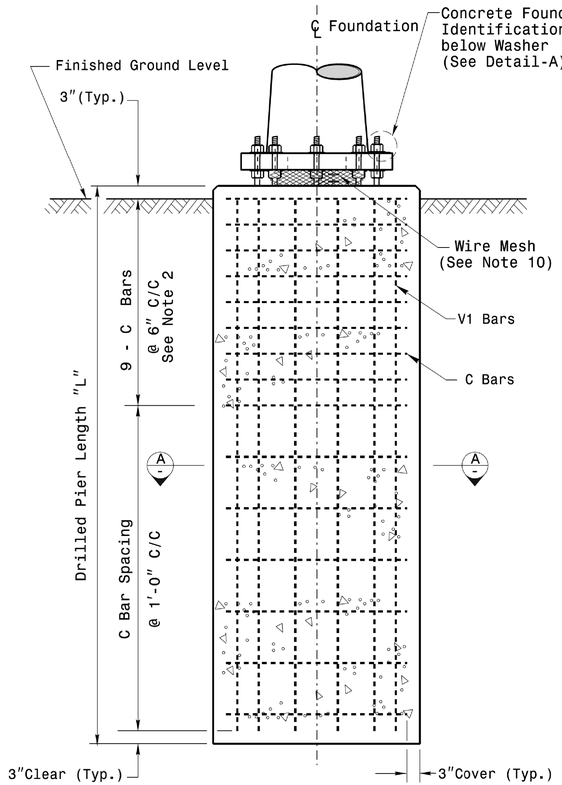

Concrete Shaft Elevation

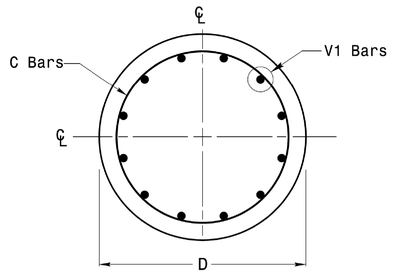

Section A-A

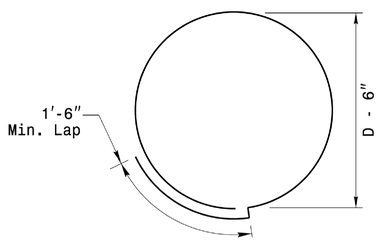

Typical "C" Bar Detail

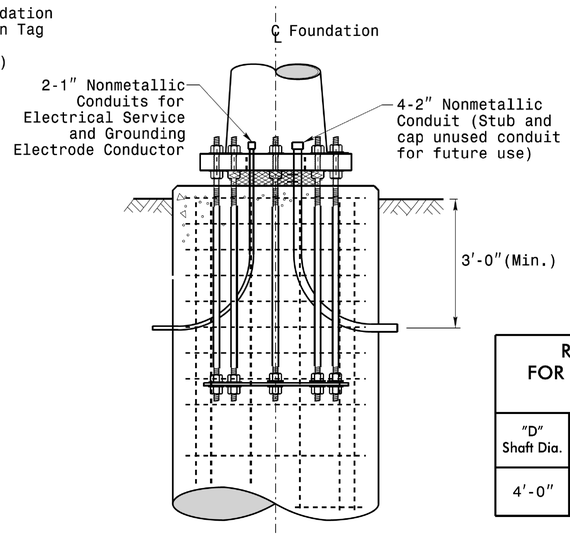

Typical Foundation Conduit Details

REINFORCING STEEL TABLE FOR STANDARD DRILL PIER SHAFT (4′–0″ DIAMETER)						
"D" Shaft Dia.	Conc. Volume (cu. yds.)	Bar Name	MIN.	Size	Type	Length
4′-0″	.465 x L	V1	—	#8	STR.	**
		C	*	#4	CIR.	12′-6″

* See Note No. 2
** See Note No. 3

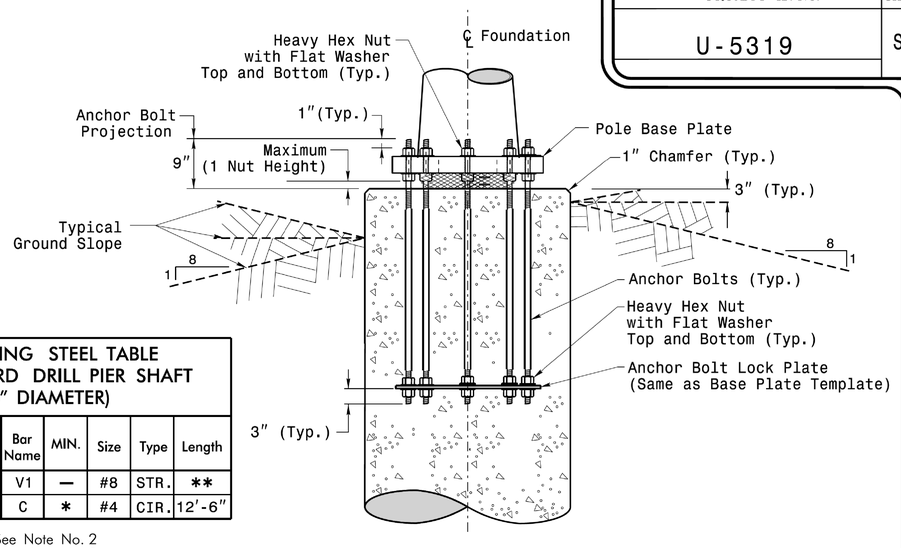

Typical Foundation Anchor Bolt Details

(Reinforcing Cage Not Shown for Clarity)

General Notes:

1. If actual subsurface conditions differ significantly from boring data contact the Engineer before excavating or placing concrete.
2. Circular tie reinforcing rings may be vertically adjusted by +/-3″ at a depth between 2′-0″ and 3′-0″ to facilitate the installation of electrical conduit entering in the cage.
3. For standard foundations, see sheet Sig. M8 for details. Vertical reinforcing bars (V1) may be horizontally adjusted by +/-3″ to facilitate the installation of electrical conduit entering into the cage.
4. Provide 2″ to 5″ foundation projection above ground level depending on the ground slope.
5. Unless otherwise shown, foundation designs are based on non-sloping level ground surfaces with slope ratios of 8:1 (H:V) or flatter. If actual ground line slopes are steeper contact the Engineer before excavating or placing concrete.
6. Construct foundations in accordance with NCDOT Standard Provisions SP09 R005- Foundations and Anchor Rod Assemblies for Metal Poles. All applicable 2018 NCDOT Standard Specifications are referenced in this provision. Refer to the NCDOT Resources/Specifications page located on the Connect NCDOT website.

   https://connect.ncdot.gov/resources/Specifications and Special Provisions.aspx
7. Use air entrained AA concrete mix with a compression strength of f'c=4500 psi.(min.) after 28 days.
8. Use ASTM A615 grade 60 deformed bars for all reinforcing steel. Maintain at least 3″ cover on all reinforcement.
9. Locate the Identification Tag on the top of the base plate, directly above the conduit's entry point.
10. Provide two layers of galvanized welded 23 gauge (0.25) 6″ wide 4 mesh wire around pipes under the base plate and secure it with ties if necessary.
11. Preferred location for the I.D. Tag is as shown in Detail-A; directly above the conduit entering the foundation.

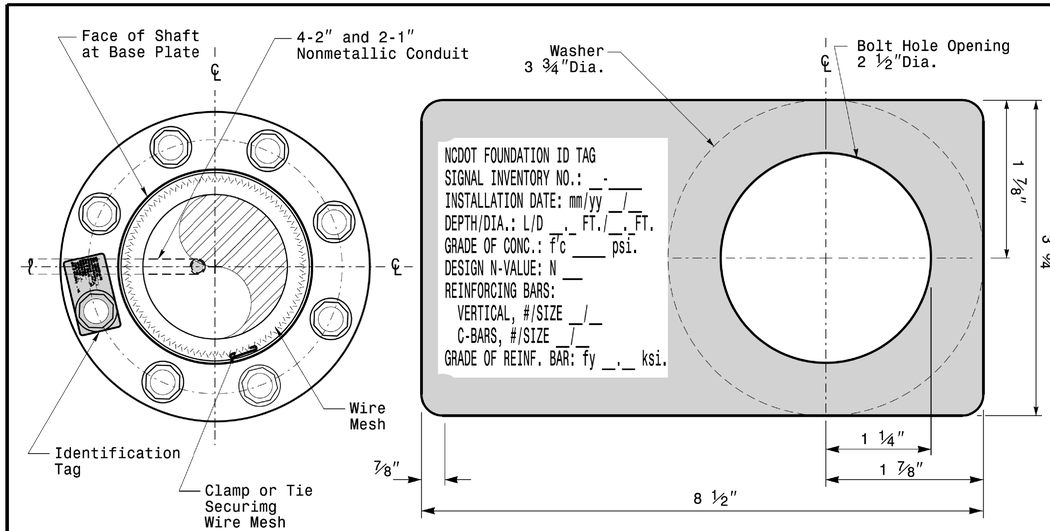

D = Diameter
L = Length/Depth
mm = Month
yy = Year

Concrete Foundation Identification Tag Details

Detail-A

Prepared in the Offices of:
Transportation Mobility and Safety Division
NORTH CAROLINA DEPARTMENT OF TRANSPORTATION
Signal Design Section
750 N.Greenfield Pkwy.Garner,NC 27529

SCALE
0 NA
NONE

Construction Details For Foundations

PLAN DATE:	OCTOBER 2018	DESIGNED BY:	C.B.COGDELL
PREPARED BY:	N. BITTING	REVIEWED BY:	D.C. SARKAR

REV. NO.	COMMENTS	INIT.	DATE
1	Revised Foundation Tag Details	N.B.	5/11/2015

SEAL
NORTH CAROLINA PROFESSIONAL SEAL 028094 ENGINEER DIBESH C. SARKAR

DocuSigned by: Dibesh C. Sarkar
SIGNATURE

10/11/2017
DATE

11-OCT-2017 08:37
S:\TISE\IM\ITS Signals\Signal Design Section\Eastern Region\MJ Sheets\2016\2014 Sig.MJ Std. Construction Details-Strain Poles.dgn
mstamper

DocuSign Envelope ID: A80F2234-B4CF-4A7A-8A1D-E9CAA5762171

SOIL CONDITION

PROJECT ID. NO.	SHEET NO.
U-5319	Sig.M8

		STANDARD STRAIN POLES						STANDARD FOUNDATIONS 48" Diameter Drilled Pier Length (L) – Feet							Reinforcement			
					Reactions at the Pole Base			Clay				Sand			Longitudinal		Stirrups	
		Case No.	Pole Height (Ft.)	Base Plate BC (In.)	Axial (kip)	Shear (kip)	Moment (ft–kip)	Medium N–Value 4–8	Stiff N–Value 9–15	Very Stiff N–Value 16–30	Hard N–Value >30	Loose N–Value 4–10	Medium N–Value 11–30	Dense N–Value >30	Bar Size (#)	Quantity (ea.)	Bar Size (#)	Spacing (in.)
WIND ZONE 1	LIGHT	S26L3	26	25	2	11	270	19	13	10	8	17	14.5	12.5	8	12	4	12
		S30L3	30	25	2	11	300	19.5	13.5	10	8	17.5	15	13	8	14	4	12
		S35L3	35	25	3	11	320	20	13.5	10.5	8	17.5	15	13	8	14	4	12
	HEAVY	S30H3	30	29	3	16	450	24.5	16	12	9	21	17.5	15	8	16	4	6
		S35H3	35	29	4	16	515	26	17	12.5	9.5	22	18.5	16	8	16	4	6
WIND ZONE 2	LIGHT	S26L2	26	23	2	10	245	18	12.5	9.5	8	16.5	14	12	8	12	4	12
		S30L2	30	23	2	10	270	18.5	12.5	10	8	16.5	14	12.5	8	12	4	12
		S35L2	35	23	3	10	300	19.5	13	10	8	17	14.5	13	8	12	4	12
	HEAVY	S30H2	30	29	3	15	415	23	15.5	11.5	9	20	17	14.5	8	16	4	6
		S35H2	35	29	4	15	475	25	16.5	12	9.5	21	17.5	15.5	8	16	4	6
WIND ZONE 3	LIGHT	S26L2	26	23	2	10	245	18	12.5	9.5	8	16.5	14	12	8	12	4	12
		S30L2	30	23	2	10	270	18.5	12.5	10	8	16.5	14	12.5	8	12	4	12
		S35L2	35	23	3	10	300	19.5	13	10	8	17	14.5	13	8	12	4	12
	HEAVY	S30H2	30	29	3	15	415	23	15.5	11.5	9	20	17	14.5	8	16	4	6
		S35H2	35	29	4	15	475	25	16.5	12	9.5	21	17.5	15.5	8	16	4	6
WIND ZONE 4	LIGHT	S26L1	26	22	2	8	190	16	11.5	8.5	8	15	12.5	11	8	12	4	12
		S30L1	30	22	2	8	205	16.5	11.5	9	8	15	13	11.5	8	12	4	12
		S35L1	35	22	3	8	230	17	12	9	8	15.5	13.5	11.5	8	12	4	12
	HEAVY	S30H1	30	25	3	12	320	20.5	13.5	10.5	8	18	15	13.5	8	16	4	6
		S35H1	35	25	4	12	350	21	14	10.5	8.5	18.5	15.5	13.5	8	16	4	6
WIND ZONE 5	LIGHT	S26L2	26	23	2	10	245	18	12.5	9.5	8	16.5	14	12	8	12	4	12
		S30L2	30	23	2	10	270	18.5	12.5	10	8	16.5	14	12.5	8	12	4	12
		S35L2	35	23	3	10	300	19.5	13	10	8	17	14.5	13	8	12	4	12
	HEAVY	S30H2	30	29	3	15	415	23	15.5	11.5	9	20	17	14.5	8	16	4	6
		S35H2	35	29	4	15	475	25	16.5	12	9.5	21	17.5	15.5	8	16	4	6

48" Dia. Foundations Concrete Volume (cubic yards) = (0.465) x Drilled Pier Length

General Notes:

1. Values shown in the "Reactions at the Pole Base" column represent the minimum acceptable capacity allowed for design using a design CSR of 1.00.
2. Use chairs and spacers to maintain proper clearance.
3. For foundation, always use air-entrain concrete mix.

Foundation Selection:

1. Perform a standard penetration test at each proposed foundation site to determine "N" value.
2. Select the appropriate wind zone from M 1 drawing.
3. Select the soil type (Clay or Sand) that best describes the soil characteristics.
4. Get the appropriate standard pole case number from the plans or from the Engineer.
5. Select the appropriate column under "Standard Foundations" based on soil type and "N" value. Select the appropriate row based on the pole load case.
6. The foundation depth is the value shown in the "Standard Foundations" category where the column and the row intersect.
7. Use Construction Procedures and Design Methods prescribed by FHWA-NHI-10-016 for Reference Drilled Shafts.

Standard Strain Pole Foundation–All Soil Condition

Prepared in the Offices of:
Transportation Mobility and Safety Division
NORTH CAROLINA DEPARTMENT OF TRANSPORTATION
Structure Design Unit
750 N.Greenfield Pkwy,Garner,NC 27529

Standard Strain Pole Foundation for All Soil Conditions

PLAN DATE:	OCTOBER 2017	DESIGNED BY:	C.B. COGDELL
PREPARED BY:	N. BITTING	REVIEWED BY:	D.C. SARKAR

REVISIONS	INIT.	DATE
Changed "Foundation Depth" to "Drilled Pier Length"in Conc. Eqn.	N.B.	7/13/2015

SCALE: 0 NA — NONE

SEAL
NORTH CAROLINA PROFESSIONAL SEAL 028094 ENGINEER DEBESH C. SARKAR

DocuSigned by: Debesh C. Sarkar
10/11/2017
DATE

DocuSign Envelope ID: A80F2234-B4CF-4A7A-8A1D-E9CAA5762171

PROJECT REFERENCE NO.	SHEET NO.
U-5319	SCP. 1

1. INSTALL 3–WIRE COPPER SERVICE ENTRANCE CONDUCTORS
2. INSTALL 4–WIRE COPPER FEEDER CONDUCTORS
3. INSTALL 3–WIRE COPPER FEEDER CONDUCTORS
4. INSTALL SMFO CABLE
5. INSTALL CAT 5e ETHERNET CABLE
6. INSTALL FIBER OPTIC DROP CABLE
7. INSTALL TRACER WIRE
8. TRENCH
9. INSTALL PVC CONDUIT
10. INSTALL RIGID, GALVANIZED STEEL CONDUIT
11. INSTALL RIGID, GALVANIZED STEEL RISER WITH WEATHERHEAD
12. INSTALL RIGID, GALVANIZED STEEL RISER WITH HEAT–SHRINK TUBING
13. INSTALL HEAT–SHRINK TUBING RETROFIT KIT
14. INSTALL POLYETHYLENE CONDUIT
15. DIRECTIONAL DRILL CONDUIT
16. BORE AND JACK CONDUIT
17. INSTALL CABLE(S) IN EXISTING CONDUIT
18. INSTALL CABLE(S) IN NEW CONDUIT
19. INSTALL CABLE(S) IN EXISTING RISER
20. INSTALL CABLE(S) IN NEW RISER
21. INSTALL CABLE(S) IN EXISTING CONDUIT ENTRANCE
22. INSTALL NEW CONDUIT INTO NEW CABINET BASE (USE EXISTING CONDUIT STUBOUTS WHEN AVAILABLE)
23. INSTALL NEW RISER INTO EXISTING CABINET BASE (USE EXISTING CONDUIT STUBOUTS WHEN AVAILABLE)
24. INSTALL NEW CONDUIT INTO POLE MOUNTED CABINET
25. INSTALL NEW RISER INTO POLE MOUNTED CABINET
26. TERMINATE FIBER–OPTIC CABLE ON INTERCONNECT CENTER IN CCTV EQUIPMENT CABINET
27. RELOCATE ETHERNET EDGE SWITCH TO NEW CABINET
28. INSTALL INTERCONNECT CENTER, PATCH PANEL, JUMPERS, AND FUSION SPLICE CABLE IN CABINET
29. INSTALL UNDERGROUND SPLICE ENCLOSURE
30. INSTALL AERIAL SPLICE ENCLOSURE
31. INSTALL SPLICE CABINET
32. MODIFY EXISTING SPLICE ENCLOSURE
33. REMOVE EXISTING SPLICE CABINET
34. INSTALL CABINET FOUNDATION
35. REMOVE EXISTING CABINET FOUNDATION
36. INSTALL GENERATOR ANCHOR IN FOUNDATION
37. INSTALL CCTV WOOD POLE
38. INSTALL CCTV CAMERA ASSEMBLY
39. INSTALL STANDARD (ELECTRICAL) JUNCTION BOX
40. INSTALL OVERSIZED JUNCTION BOX
41. INSTALL SPECIAL OVERSIZED JUNCTION BOX
42. INSTALL WOOD POLE
43. REMOVE EXISTING WOOD POLE
44. INSTALL AERIAL GUY ASSEMBLY
45. INSTALL STANDARD GUY ASSEMBLY
46. INSTALL SIDEWALK GUY ASSEMBLY
47. INSTALL MESSENGER CABLE
48. REMOVE EXISTING COMMUNICATIONS CABLE AND MESSENGER CABLE
49. REMOVE EXISTING COMMUNICATIONS CABLE
50. INSTALL CELL MODEM
51. INSTALL CABLE STORAGE RACKS (SNOW SHOES) AND STORE 100 FEET OF CABLE
52. INSTALL DELINEATOR MARKER
53. STORE 30 FEET OF COMMUNICATIONS CABLE (EACH CABLE), EXCEPT AS NOTED ON PLANS
54. LASH CABLE(S) TO EXISTING MESSENGER CABLE
55. LASH CABLE(S) TO EXISTING SIGNAL /COMMUNICATION CABLE
56. LASH CABLES TO NEW MESSENGER CABLE
57. RECONNECT GENERATOR POWER INLET BOX

LEGEND

- FO — FO — NEW FIBER OPTIC COMMUNICATIONS CABLE
- EXI — EXI — EXISTING COMMUNICATIONS CABLE
- REM — REM — EXISTING COMMUNICATIONS CABLE TO BE REMOVED
- NEW CONDUIT
- EXISTING CONDUIT
- DD — DD — NEW DIRECTIONAL DRILLED CONDUIT
- NEW GUARDRAIL
- EXISTING RIGHT OF WAY
- NEW JUNCTION BOX
- EXISTING JUNCTION BOX
- NEW OVERSIZED HEAVY DUTY JUNCTION BOX WITH SPLICE ENCLOSURE
- EXISTING OVERSIZED HEAVY DUTY JUNCTION BOX WITH NEW SPLICE ENCLOSURE
- SNOW SHOE
- NEW WOOD POLE
- EXISTING WOOD POLE
- NEW SPLICE ENCLOSURE
- EXISTING SPLICE ENCLOSURE
- NEW METAL POLE WITH MAST ARM
- EXISTING METAL POLE WITH MAST ARM
- NEW CCTV CAMERA ASSEMBLY
- EXISTING CCTV CAMERA ASSEMBLY
- NEW STANDARD GUY ASSEMBLY
- EXISTING STANDARD GUY ASSEMBLY
- NEW SIDEWALK GUY ASSEMBLY
- NEW SIGNAL CABINET
- EXISTING SIGNAL CABINET
- NEW FIELD EQUIPMENT CABINET
- EXISTING FIELD EQUIPMENT CABINET
- SP — SIGNAL POLE
- XXX–# — EXISTING ITS DEVICE NUMBER
- XX–XXXX — SIGNAL INVENTORY NUMBER

CONSTRUCTION NOTE SYMBOLOGY KEY

NUMBER OF CABLE(S), LOOPS, ETC. — XX △ XX — NUMBER OF FIBERS / TWISTED PAIRS PER CABLE, ETC.

NUMBER OF RISER(S) / CONDUIT(S) — XX ○ XX — DIAMETER OF RISER(S) / CONDUIT(S) (INCH)

NUMBER OF DEVICES — XX ◇ XX — NUMBER OF FIBERS

HNTB NORTH CAROLINA, P.C.
343 E. Six Forks Road, Suite 200
Raleigh, North Carolina 27609
NC License No: C-1554
(919) 546-8997

DOCUMENT NOT CONSIDERED FINAL UNLESS ALL SIGNATURES COMPLETED

Plans Prepared for: NC Department of Transportation

750 N. Greenfield Pkwy., Garner, NC 27529

CONSTRUCTION NOTES AND LEGEND

Division 03 Onslow Co. Jacksonville

PLAN DATE:	January 2018	REVIEWED BY:	T.R. Terrell
PREPARED BY:	J.A. Wagner	REVIEWED BY:	N.R. Simmons

SCALE: NONE

REVISIONS	INIT.	DATE

SEAL 031464 NORTH CAROLINA PROFESSIONAL ENGINEER NATASHA R. SIMMONS

DocuSigned by: Natasha R. Simmons 4/11/2018

SIGNATURE DATE

CADD Filename: U5319_SCP-01.dgn

DocuSign Envelope ID: A80F2234-B4CF-4A7A-8A1D-E9CAA5762171

PROJECT REFERENCE NO.	SHEET NO.
U-5319	SCP. 2

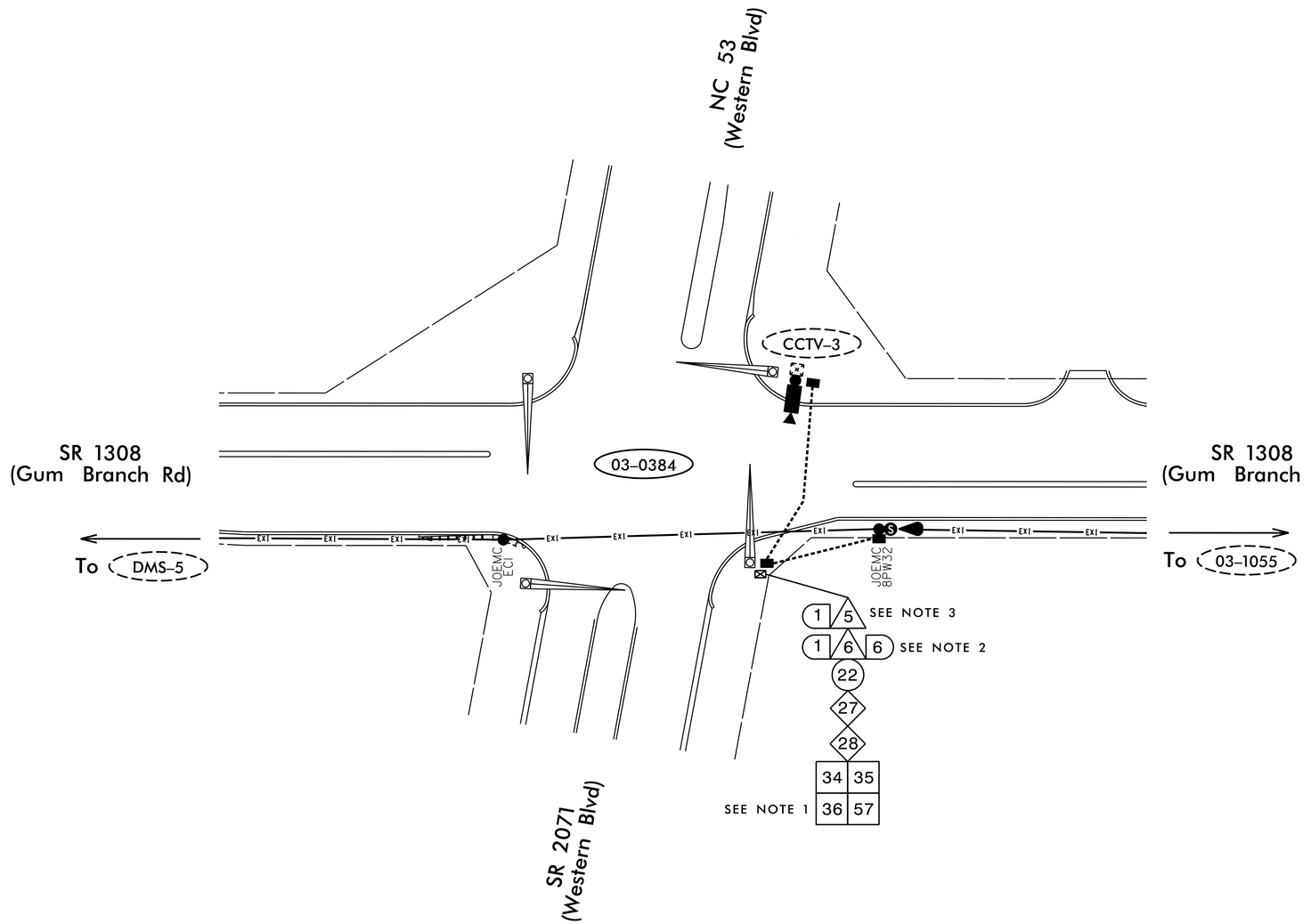

NOTES:

1. REMOVE EXISTING EMERGENCY VEHICLE PROVISIONS FROM EXISTING TRAFFIC SIGNAL CONTROLLER CABINET AND RELOCATE TO THE NEW CABINET.
2. PULL THE EXISTING 6–FIBER CABLE TO THE JUNCTION BOX NEXT TO THE CABINET DURING THE CABINET CHANGE–OUT. CAP THE FIBERS DURING STORAGE. PULL THE 6–FIBER CABLE BACK IN AND RECONNECT TO THE NEW INTERCONNECT CENTER.
3. PULL THE EXISTING CCTV ETHERNET CABLE TO THE JUNCTION BOX NEXT TO THE CABINET DURING THE CABINET CHANGE–OUT. PULL THE ETHERNET CABLE BACK IN AND RECONNECT TO THE RELOCATED ETHERNET SWITCH.
4. RETURN EXISTING CABINET AND STRAIN POLES TO DIVISION 3 TRAFFIC SERVICES.

DOCUMENT NOT CONSIDERED FINAL UNLESS ALL SIGNATURES COMPLETED

HNTB NORTH CAROLINA, P.C.
343 E. Six Forks Road, Suite 200
Raleigh, North Carolina 27609
NC License No: C-1554
(919) 546-8997

Plans Prepared for:
Transportation Mobility and Safety Division
Intelligent Transportation Systems Section
750 N. Greenfield Pkwy., Garner, NC 27529

SCALE 0 50 1"=50'

CABLE ROUTING PLANS

Division 03 Onslow Co. Jacksonville

PLAN DATE:	January 2018	REVIEWED BY:	T.R. Terrell
PREPARED BY:	J.A. Wagner	REVIEWED BY:	N.R. Simmons

REVISIONS	INIT.	DATE

SEAL
NORTH CAROLINA PROFESSIONAL SEAL 031464 ENGINEER NATASHA R. SIMMONS
DocuSigned by: Natasha R. Simmons 4/11/2018
SIGNATURE DATE

CADD Filename: U5319 SCP-2.dgn

DocuSign Envelope ID: A80F2234-B4CF-4A7A-8A1D-E9CAA5762171

PROJECT REFERENCE NO.	SHEET NO.
U-5319	SCP. 3

03–0384 /CCTV–3
SR 1308 (GUM BRANCH RD)
AT
NC 53 /SR 2071
(WESTERN BLVD)

LEGEND

COLOR CODE TIA/EIA 598–C

(1)	BLUE	(7)	RED
(2)	ORANGE	(8)	BLACK
(3)	GREEN	(9)	YELLOW
(4)	BROWN	(10)	VIOLET
(5)	SLATE	(11)	ROSE
(6)	WHITE	(12)	AQUA

X = NEW FUSION SPLICE INDIVIDUAL FIBER
● = EXISTING FUSION SPLICE
C = CAP AND SEAL
EXPRESS = EXPRESS ENTIRE BUFFER TUBE THROUGH WITHOUT CUTTING
BUFFER SPLICE = SPLICE ALL FIBERS IN BUFFER TUBE COLOR TO COLOR

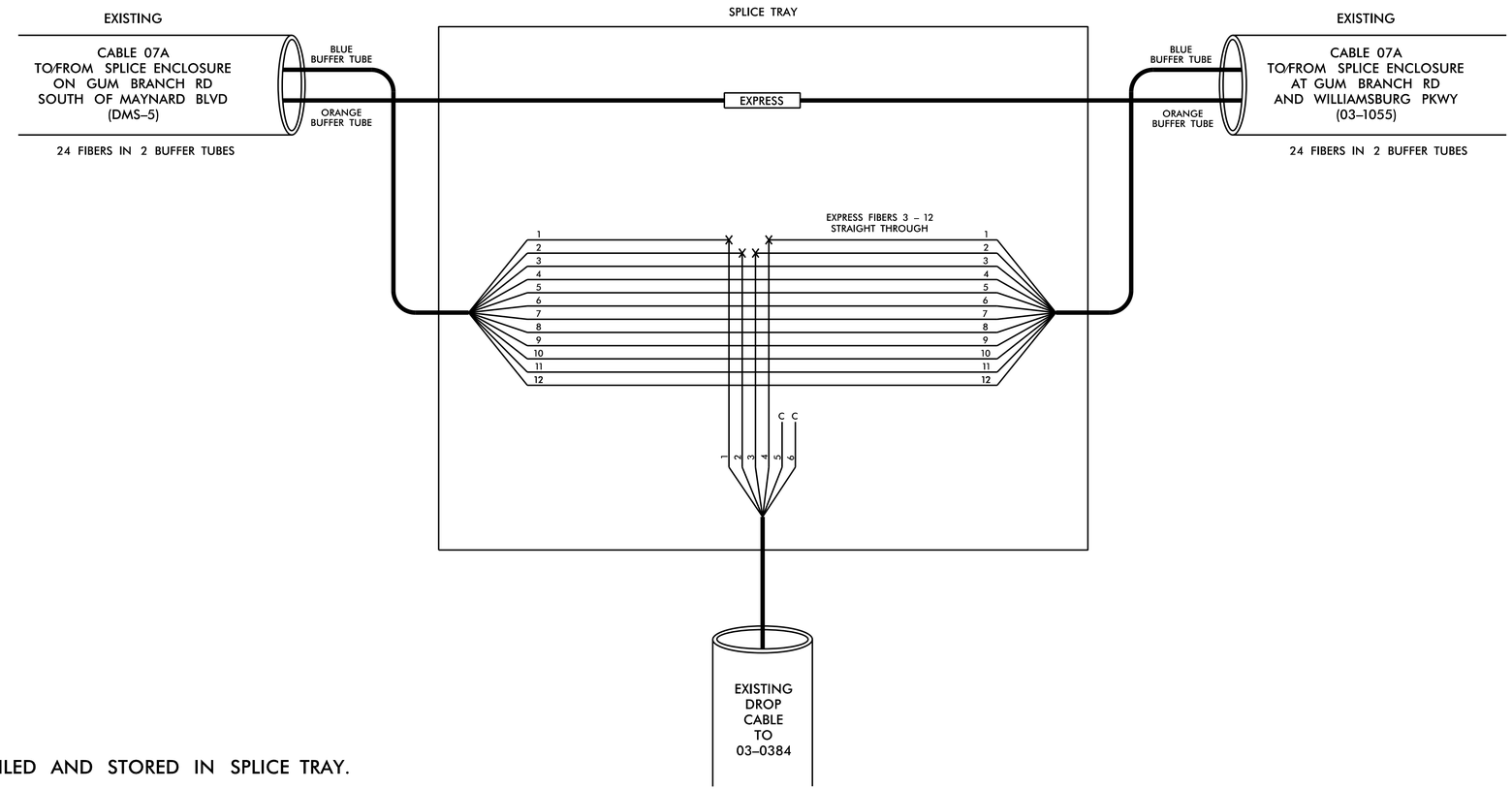

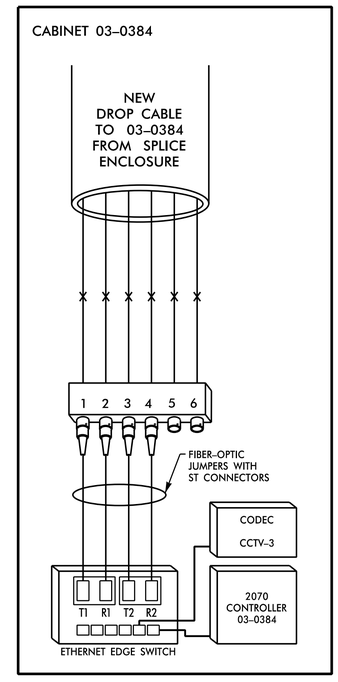

NOTES:

1. UNUSED FIBERS LEFT COILED AND STORED IN SPLICE TRAY.
2. UNUSED BUFFER TUBES LEFT COILED AND STORED IN SPLICE ENCLOSURE.
3. TRANSCEIVER TERMINATION AND ETHERNET SWITCH TERMINATION CONFIGURATIONS ARE GENERIC. CONTRACTOR IS RESPONSIBLE FOR DETERMINING / ENSURING PROPER TERMINATION.
4. INCLUDE ON THE COVER OF EACH SPLICE TRAY THE FOLLOWING: REFERENCE SECTION 1731 "FIBER OPTIC SPLICE ENCLOSURE"

   (1) SPLICE
   (2) DATE
   (3) COMPANY NAME
   (4) NAME OF INDIVIDUAL PERFORMING THE SPLICING

   PRIOR TO INSTALLING THE COVER ON THE SPLICE TRAY, TAKE A DIGITAL PHOTOGRAPH SHOWING THE SPLICE TRAY AND INFORMATION SHOWN ABOVE (1–4) AND SUBMIT PHOTOGRAPH ALONG WITH OTDR TEST RESULTS.

HNTB
HNTB NORTH CAROLINA, P.C.
343 E. Six Forks Road, Suite 200
Raleigh, North Carolina 27609
NC License No: C-1554
(919) 546-8997

DOCUMENT NOT CONSIDERED FINAL UNLESS ALL SIGNATURES COMPLETED

Plans Prepared for:
Transportation Mobility and Safety Division
Intelligent Transportation Systems Section
STATE OF NORTH CAROLINA
DEPARTMENT OF TRANSPORTATION
750 N. Greenfield Pkwy., Garner, NC 27529

SPLICE DETAILS

Division 03 Onslow Co. Jacksonville

PLAN DATE:	January 2018	REVIEWED BY:	T.R. Terrell
PREPARED BY:	J.A. Wagner	REVIEWED BY:	N.R. Simmons

SCALE: NONE

REVISIONS	INIT.	DATE

SEAL
NORTH CAROLINA PROFESSIONAL SEAL 031464 ENGINEER NATASHA R. SIMMONS

DocuSigned by: Natasha R. Simmons
PROFESSIONAL ENGINEER
SIGNATURE 4/11/2018 DATE

CADD Filename: U5319_SCP-3.dgn

DocuSign Envelope ID: A80F2234-B4CF-4A7A-8A1D-E9CAA5762171

PROJECT REFERENCE NO.	SHEET NO.
U-5319	SCP. 4

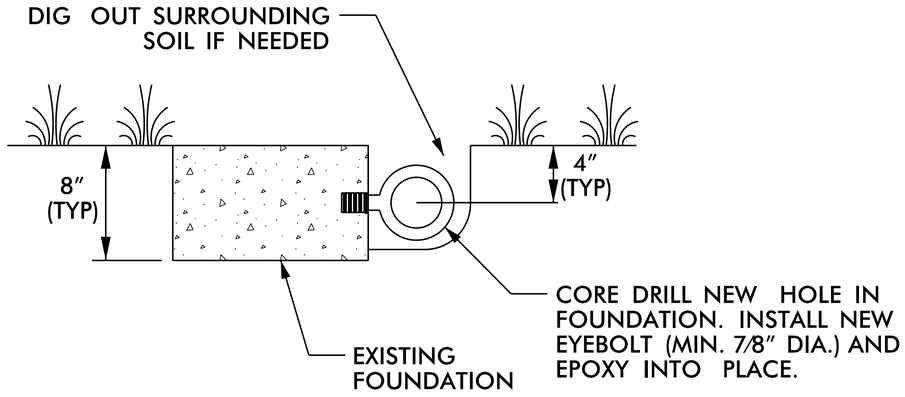

TYPICAL GENERATOR ANCHOR
ELEVATION

DOCUMENT NOT CONSIDERED FINAL UNLESS ALL SIGNATURES COMPLETED

Plans Prepared for:

NORTH CAROLINA DEPARTMENT OF TRANSPORTATION — Integrated Mobility and Safety Division

750 N. Greenfield Pkwy., Garner, NC 27529

TYPICAL DETAILS

Division 03 | Onslow Co. | Jacksonville

PLAN DATE: January 2018 | REVIEWED BY: T.R. Terrell

PREPARED BY: J.A. Wagner | REVIEWED BY: N.R. Simmons

SCALE: NONE

REVISIONS	INIT.	DATE

SEAL
NORTH CAROLINA PROFESSIONAL SEAL 031464 ENGINEER NATASHA R. SIMMONS

DocuSigned by: Natasha R. Simmons 4/11/2018

SIGNATURE DATE

CADD Filename: U5319_SCP-4.dgn

HNTB NORTH CAROLINA, P.C.
343 E. Six Forks Road, Suite 200
Raleigh, North Carolina 27609
NC License No: C-1554
(919) 546-8997

DocuSign Envelope ID: E627A472-E538-4CCC-8837-87CD11743EDB

09/08/99

TIP PROJECT: U-5319

T.I.P. NO.	SHEET NO.
U-5319	UC-1

STATE OF NORTH CAROLINA
DIVISION OF HIGHWAYS

UTILITY CONSTRUCTION PLANS
ONSLOW COUNTY

LOCATION: INTERSECTION OF SR 1308 (GUM BRANCH ROAD) AND NC 53 (WESTERN BOULEVARD)

TYPE OF WORK: WATER LINE RELOCATION

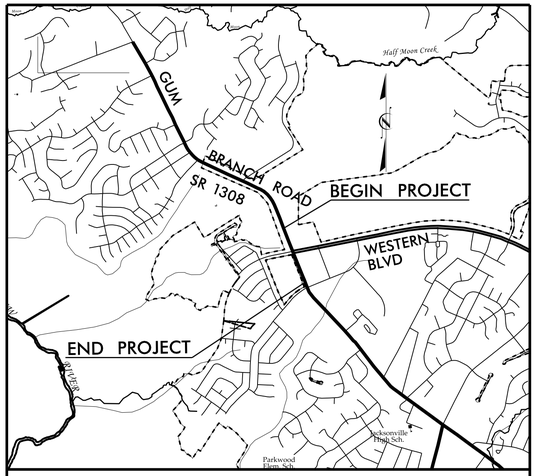

VICINITY MAP

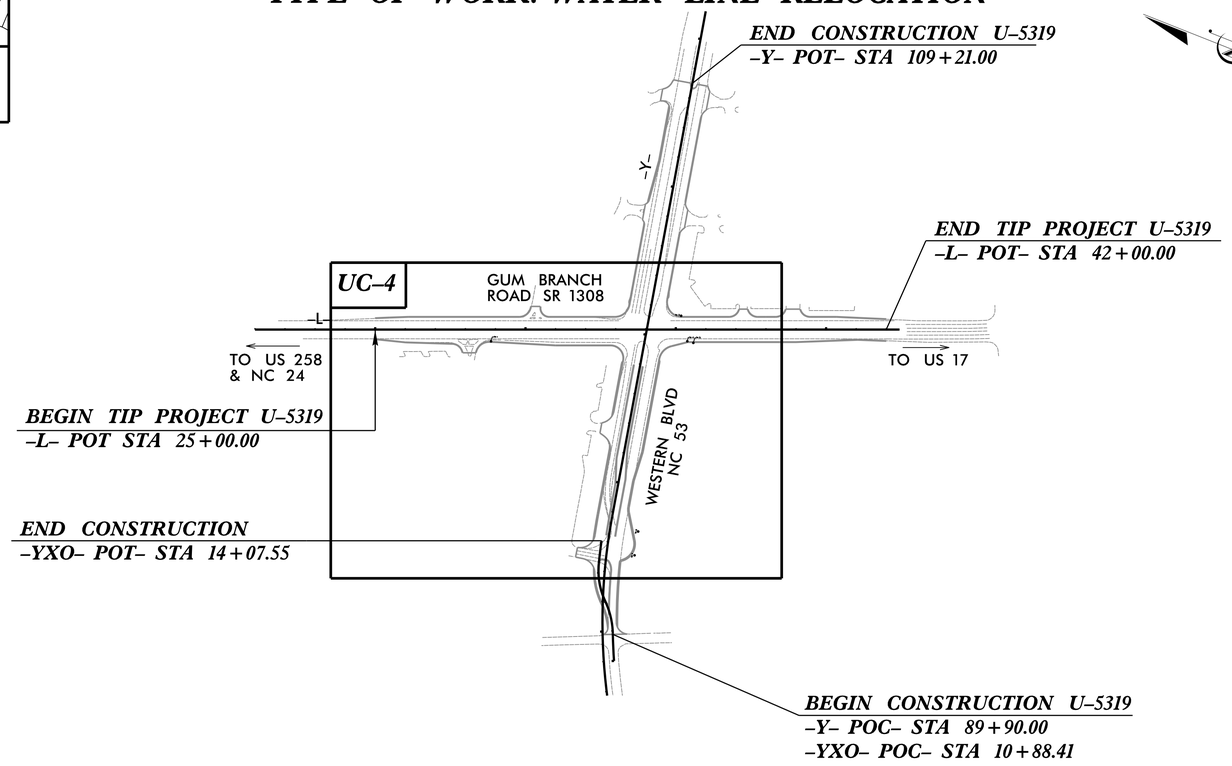

NOTE:

1. THIS PROJECT IS WITHIN THE MUNICIPAL BOUNDARIES OF JACKSONVILLE.

DOCUMENT NOT CONSIDERED FINAL UNTIL ALL SIGNATURES ARE COMPLETED

GRAPHIC SCALES

50 25 0 50 100
PLANS

50 25 0 50 100
PROFILE (HORIZONTAL)

10 5 0 10 20
PROFILE (VERTICAL)

INDEX OF SHEETS

SHEET NO.:	DESCRIPTION:
UC-1	TITLE SHEET
UC-2	UTILITY SYMBOLOGY
UC-3	NOTES
UC-3A TO UC-3B	DETAILS
UC-4	PLAN SHEET
UC-5	PROFILE SHEET

WATER AND SEWER OWNERS ON PROJECT

(A) WATER - CITY OF JACKSONVILLE
(B) SANITARY SEWER - CITY OF JACKSONVILLE

PREPARED IN THE OFFICE OF

M A Engineering Consultants, Inc.
598 East Chatham Street - Suite 137
Cary, NC 27511
Phone: 919.297.0220 Fax: 919.297.0221
NC License: F-0160

FOR

HNTB
HNTB NORTH CAROLINA, P.C.
343 E. Six Forks Road, Suite 200
Raleigh, North Carolina 27609
NC License No: C-1554

KEVIN ZDEB, PE	PROJECT ENGINEER
GARY BLUE	PROJECT DESIGNER
WEBB WHITE	PROJECT UTILITY COORDINATOR

SEAL

NORTH CAROLINA PROFESSIONAL SEAL 27611 ENGINEER KEVIN C. ZDEB

Electronically Signed by: Kevin C. Zdeb
DocuSign Certificate: 2C1180

2/23/2018

DIVISION OF HIGHWAYS
DIVISION 3
5501 BARBADOS BLVD
CASTLE HAYNE NC 28429
PHONE (910) 341-2000
FAX (910) 675-0143

AL EDGERTON, PE	DIV. BRIDGE PROGRAM ENGNR
KEVIN G. BOWEN, PE	DIV. CONSTRUCTION ENGINEER
LONNY A. SLEEPER	DIVISION UTILITY ENGINEER
J. STEVE DAVIS	UTILITIES

2/23/2018
P:\JOBS\0696\020\2400 U-5319\Utilities\Proj\U-5319_ut_UC-01_tsh.dgn
1:50:30 PM

5/14/99

PROJECT REFERENCE NO.	SHEET NO.
U-5319	UC-2

STATE OF NORTH CAROLINA
DIVISION OF HIGHWAYS

UTILITIES PLAN SHEET SYMBOLS

PROPOSED WATER SYMBOLS

- Water Line (Sized as Shown) — 12" WL
- 11¼ Degree Bend
- 22½ Degree Bend
- 45 Degree Bend
- 90 Degree Bend
- Plug
- Tee
- Cross
- Reducer
- Gate Valve — GV
- Butterfly Valve — BV
- Tapping Valve — TGV
- Line Stop — LS
- Line Stop with Bypass — LS/BP
- Blow Off — BO
- Fire Hydrant — PFH
- Relocate Fire Hydrant — RFH
- Remove Fire Hydrant — REM FH
- Water Meter — PWM
- Relocate Water Meter — RWM
- Remove Water Meter — REM WM
- Water Pump Station — PS(W)
- RPZ Backflow Preventer — PRPZ
- DCV Backflow Preventer — PBFP
- Relocate RPZ Backflow Preventer — RRPZ
- Relocate DCV Backflow Preventer — RBFP

PROPOSED SEWER SYMBOLS

- Gravity Sewer Line (Sized as Shown) — 12" SS
- Force Main Sewer Line (Sized as Shown) — 12" FSS
- Manhole (Sized per Note)
- Sewer Pump Station — PS(SS)

PROPOSED MISCELLANOUS UTILITIES SYMBOLS

- Power Pole
- Telephone Pole
- Joint Use Pole
- Telephone Pedestal — TEL PED
- Utility Line by Others (Type as Shown) — PROP O/H POW LINES
- Trenchless Installation — 12" TL INSTALL
- Encasement by Open Cut — 24" ENCAS BY OC
- Encasement — 24" ENCASEMENT
- Thrust Block
- Air Release Valve — AR
- Utility Vault — UV
- Concrete Pier — CP
- Steel Pier — SP
- Plan Note — NOTE
- Pay Item Note — PAY ITEM

EXISTING UTILITIES SYMBOLS

- Power Pole
- Telephone Pole
- Joint Use Pole
- Utility Pole
- Utility Pole with Base
- H-Frame Pole
- Power Transmission Line Tower
- Water Manhole
- Power Manhole
- Telephone Manhole
- Sanitary Sewer Manhole
- Hand Hole for Cable
- Power Transformer
- Telephone Pedestal
- CATV Pedestal
- Gas Valve
- Gas Meter
- Located Miscellaneous Utility Object
- Abandoned According to Utility Records — AATUR
- End of Information — E.O.I.
- *Underground Power Line — P
- *Underground Telephone Cable — T
- *Underground Telephone Conduit — TC
- *Underground Fiber Optics Telephone Cable — T FO
- *Underground TV Cable — TV
- *Underground Fiber Optics TV Cable — TV FO
- *Underground Gas Pipeline — G
- Aboveground Gas Pipeline — A/G Gas
- *Underground Water Line — W
- Aboveground Water Line — A/G Water
- *Underground Gravity Sanitary Sewer Line — SS
- Aboveground Gravity Sanitary Sewer Line — A/G Sanitary Sewer
- *Underground SS Forced Main Line — FSS
- Underground Unknown Utility Line — ?UTL
- SUE Test Hole
- Water Meter
- Water Valve
- Fire Hydrant
- Sanitary Sewer Cleanout

*For Existing Utilities

- Utility Line Drawn from Record (Type as Shown) — W
- Designated Utility Line (Type as Shown) — W

REV: 2/1/2012

10/9/2017
J:\PROJECTS\5396\020\12-Design\Utilities\Proj\U-5319_ut_UC-02_sym.dgn
12:28:31 PM

DocuSign Envelope ID: CBF40924-75E0-417F-9C26-03FB4103BE1D

UTILITY CONSTRUCTION

PROJECT REFERENCE NO.	SHEET NO.
U-5319	UC-3
DESIGNED BY: GJB	
DRAWN BY: GJB	
CHECKED BY: KCZ	
APPROVED BY: KCZ	
REVISED:	

NORTH CAROLINA PROFESSIONAL SEAL 27611 ENGINEER KEVIN C. ZOBB
Documents signed by Kevin C. Zobb
3/15/2018

NORTH CAROLINA DEPARTMENT OF TRANSPORTATION
UTILITIES ENGINEERING SEC.
PHONE:(919)707-6690
FAX:(919)250-4151

UTILITY CONSTRUCTION PLANS ONLY

UTILITY CONSTRUCTION

M A Engineering Consultants, Inc.
598 East Chatham Street - Suite 137
Cary, NC 27511
Phone: 919.297.0220 Fax: 919.297.0221
NC License: F-0160

DOCUMENT NOT CONSIDERED FINAL UNTIL ALL SIGNATURES ARE COMPLETED

GENERAL NOTES:

1. THE PROPOSED UTILITY CONSTRUCTION SHALL MEET THE APPLICABLE REQUIREMENTS OF THE NC DEPARTMENT OF TRANSPORTATION'S "STANDARD SPECIFICATIONS FOR ROADS AND STRUCTURES" DATED JANUARY 2018.

2. THE EXISTING WATER LINE AND SEWER LINE UTILITIES BELONG TO THE CITY OF JACKSONVILLE.

CITY OF JACKSONVILLE (COJ)
CONTACT: MICHAEL MOORE
PHONE: 910-938-5332

3. ALL WATER LINES TO BE INSTALLED WITHIN COMPLIANCE OF THE RULES AND REGULATIONS OF THE NORTH CAROLINA DEPARTMENT OF ENVIRONMENTAL AND NATURAL RESOURCES, DIVISION OF ENVIRONMENTAL HEALTH.

4. THE UTILITY OWNER OWNS THE EXISTING UTILITY FACILITIES AND WILL OWN THE NEW UTILITY FACILITIES AFTER ACCEPTANCE BY THE DEPARTMENT. THE DEPARTMENT OWNS THE CONSTRUCTION CONTRACT AND HAS ADMINISTRATIVE AUTHORITY. COMMUNICATIONS AND DECISIONS BETWEEN THE CONTRACTOR AND UTILITY OWNER ARE NOT BINDING UPON THE DEPARTMENT OR THIS CONTRACT UNLESS AUTHORIZED BY THE ENGINEER. AGREEMENTS BETWEEN THE UTILITY OWNER AND CONTRACTOR FOR THE WORK THAT IS NOT PART OF THIS CONTRACT OR IS SECONDARY TO THIS CONTRACT ARE ALLOWED, BUT ARE NOT BINDING UPON THE DEPARTMENT.

5. PROVIDE ACCESS FOR THE DEPARTMENT PERSONNEL AND THE OWNER'S REPRESENTATIVES TO ALL PHASES OF CONSTRUCTION. NOTIFY DEPARTMENT PERSONNEL AND THE UTILITY OWNER TWO WEEKS PRIOR TO COMMENCEMENT OF ANY WORK AND ONE WEEK PRIOR TO SERVICE INTERRUPTION. KEEP UTILITY OWNERS' REPRESENTATIVES INFORMED OF WORK PROGRESS AND PROVIDE OPPORTUNITY FOR INSPECTION OF CONSTRUCTION AND TESTING.

6. MAKE FINAL CONNECTIONS OF THE NEW WORK TO THE EXISTING SYSTEM WHERE INDICATED ON THE PLANS, AS REQUIRED TO FIT THE ACTUAL CONDITIONS, OR AS DIRECTED.

7. THE PLANS DEPICT THE BEST AVAILABLE INFORMATION FOR THE LOCATION, SIZE, AND TYPE OF MATERIAL FOR ALL EXISTING UTILITIES. MAKE INVESTIGATIONS FOR DETERMINING THE EXACT LOCATION, SIZE, AND TYPE MATERIAL OF THE EXISTING FACILITIES AS NECESSARY FOR THE CONSTRUCTION OF THE PROPOSED UTILITIES AND FOR AVOIDING DAMAGE TO EXISTING FACILITIES. REPAIR ANY DAMAGE INCURRED TO EXISTING FACILITIES TO THE ORIGINAL OR BETTER CONDITION AT NO ADDITIONAL COST TO THE DEPARTMENT.

8. ADEQUATE NOTIFICATION TO WATER CUSTOMERS WILL BE GIVEN BY THE CONTRACTOR PRIOR TO ANY INTERRUPTION OF SERVICE. SERVICE IS TO BE CONTINUOUSLY MAINTAINED TO CUSTOMERS IN THE PROJECT AREAS EXCEPT FOR THE MINIMUM AMOUNT OF TIME REQUIRED TO MAKE CONNECTIONS WITH THE EXISTING SYSTEM. BEFORE SHUTTING OFF ANY MAIN, RESIDENTS ARE TO BE NOTIFIED BY CITY OF JACKSONVILLE REPRESENTATIVES IN WRITING AT LEAST 24 HOURS IN ADVANCE OF CUT OFF. THE CONTRACTOR SHALL ASSIST THE CITY IN NOTIFICATION DISTRIBUTION.

9. ALL UTILITY MATERIALS SHALL BE APPROVED PRIOR TO DELIVERY TO THE PROJECT. SEE 1500-7, " SUBMITTALS AND RECORDS" IN SECTION 1500 OF THE STANDARD SPECIFICATIONS.

10. EXCEPT AS NEEDED FOR FIRE SUPPRESSION PURPOSES, THE CITY OF JACKSONVILLE WILL BE THE SOLE OPERATOR OF ALL VALVES AND HYDRANTS ON THE CITY OF JACKSONVILLE WATER DISTRIBUTION SYSTEM. THE UTILITY OWNER SHALL BE NOTIFIED AT LEAST 48 HOURS IN ADVANCE OF REQUEST FOR OPERATION OF VALVES AND MAKING A WET TAP OR CUT-IN. ONLY IN CASE OF AN EMERGENCY MAY THE CONTRACTOR CLOSE A VALVE. RECORDS SHALL BE KEPT OF ANY VALVES CLOSED DURING AN EMERGENCY AND THE PUBLIC SERVICES DEPARTMENT SHALL BE NOTIFIED OF THE SPECIFIC VALVES CLOSED AT THE EARLIEST REASONABLE TIME.

PROJECT SPECIFIC NOTES:

1. PROPOSED PIPE FOR OPEN TRENCH INSTALLATION SHALL BE DUCTILE IRON PIPE WITH RESTRAINED JOINT CONSTRUCTION, PRESSURE CLASS OF 350 IN ACCORDANCE WITH AWWA C151 / ANSI A21.51, OR PVC PRESSURE PIPE WITH BELL END WITH GASKET AND SPIGOT END COMPLYING WITH AWWA C-900, PRESSURE CLASS 150, DR 18 AND BEAR THE SEAL OF THE NATIONAL SANITATION FOUNDATION.
PVC C-900 PIPE MAY ONLY BE USED ON MAINS SIZED 6-INCH THROUGH 12-INCH.

2. PROPOSED PIPE TO BE INSTALLED FOR DOWN AND UNDER LOCATIONS TO AVOID PROPOSED DRAINAGE PIPES SHALL BE DUCTILE IRON PIPE WITH RESTRAINED JOINT CONSTRUCTION. THE DOWN AND UNDER PIPE SEGMENT SHALL BE FULLY ASSEMBLED BEFORE LOWERING INTO POSITION.

3. ALL WATER LINE FITTINGS, 4-INCHES THROUGH 48-INCHES IN DIAMETER, SHALL BE DUCTILE IRON, GRADE 70-50-05, PRESSURE CLASS 350 CONFORMING TO AWWA C110/ANSI A21.10. GLANDS, GASKETS, AND BOLTS SHALL CONFORM TO AWWA C111/ANSI A 21.11. THE USE OF PUSH ON FITTINGS IS NOT PERMITTED.

4. ALL PROPOSED FITTINGS (BENDS, TEES, CROSSES, REDUCERS, PLUGS, ETC.) SHALL BE ADEQUATELY RESTRAINED BY THE USE OF RESTRAINED JOINT CONSTRUCTION OR MECHANICAL JOINT RESTRAINT SYSTEMS AS DETAILED ON THESE DRAWINGS, OR AS DIRECTED BY THE RESIDENT ENGINEER. CONCRETE THRUST BLOCKING IS NOT RECOMMENDED WHERE THE BLOCKING MAY BEAR ON OTHER UTILITIES OR WHERE THE AREA BEHIND THE BLOCK MAY BE EXCAVATED IN THE FUTURE.

5. EXISTING BURIED WATER LINE TO BE ABANDONED AND NOT REMOVED BY CONTRACTOR SHALL BE FILLED WITH FLOWABLE FILL AND CAPPED AT EACH END.

6. ALL UTILITY CONSTRUCTION SHALL BE SUBJECT TO A FINAL INSPECTION BY THE UTILITY OWNER TO INSURE CONFORMANCE TO THE UTILITY OWNER STANDARDS PRIOR TO FINAL ACCEPTANCE BY THE DEPARTMENT.

PROJECT QUANTITIES

ITEM NUMBER	DESCRIPTION	QUANTITY	
5319000000-E	CLASS B CONCRETE FOR ENCASING UTILITY LINES	1	CY
5326200000-E	12" WATER LINE	246	LF
5327400000-E	16" WATER LINE	70	LF
5329000000-E	DUCTILE IRON WATER PIPE FITTINGS	5,105	POUNDS
5589200000-E	2" AIR RELEASE VALVE	1	EA
5804000000-E	ABANDON 12" UTILITY PIPE	232	LF
5810000000-E	ABANDON 16" UTILITY PIPE	62	LF
5828000000-N	REMOVE UTILITY MANHOLE	1	EA

3/15/2018
3:05:03 PM
C:\Projects\2696\020\12400 U-5319\Utilities\Proj\U-5319_ut_UC-03_not.dgn

DocuSign Envelope ID: E627A472-E538-4CCC-8837-87CD11743EDB

5/14/99

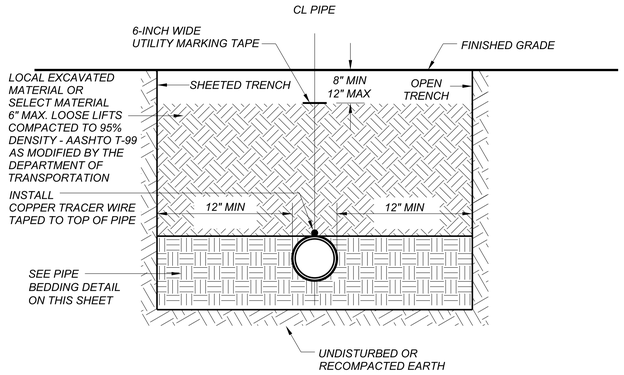

RECOMMENDED
OPEN TRENCH WIDTH
AT TOP OF PIPE

NOMINAL PIPE SIZE (INCHES)	TRENCH WIDTH (INCHES)
4	29
6	31
8	33
10	35
12	37
14	40
16	42
18	44

GENERAL TRENCH DETAIL
NOT TO SCALE

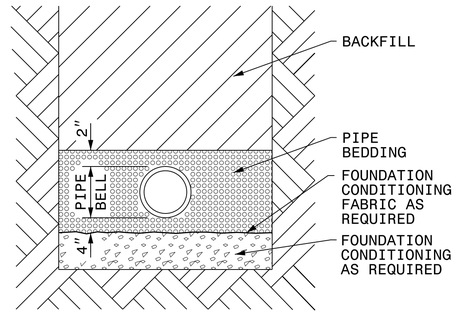

NOTES:
1. IF REQUIRED, PLACE FOUNDATION CONDITIONING MATERIAL BELOW BEDDING AS DIRECTED BY ENGINEER.
2. PIPE BEDDING SHALL BE SELECT MATERIAL, EITHER CLASS II (TYPE 1) OR CLASS III, AS PER SECTION 1016.
3. TRENCH SHALL BE BACKFILLED IN LOOSE 6" LAYERS COMPACTED TO TOP OF TRENCH USING LOCAL EXCAVATED MATERIAL IF APPROVED BY THE ENGINEER, OR SELECT MATERIAL.
3. LOCAL EXCAVATED MATERIAL IS DEFINED AS NATIVE SOIL EXCAVATED FROM THE TRENCH THAT IS FREE OF: ROCKS; FOREIGN MATERIAL; AND FROZEN EARTH.
4. COMPACTION SHALL BE TO APPROXIMATELY 95% DENSITY IN ACCORDANCE WITH AASHTO T-99 AS MODIFIED BY THE DEPARTMENT OF TRANSPORTATION.

PIPE BEDDING DETAIL
NOT TO SCALE

NOTES:
1. CONCRETE BRIDGING IS REQUIRED WHEN THE CLEARANCE, C, BETWEEN THE TOP OF THE LOWER PIPE AND THE BOTTOM OF THE UPPER PIPE IS LESS THAN 18".
2. "Y" = D/6 (6" MIN.)
3. WHENEVER A PIPE BELL IS ENCOUNTERED WITHIN THE LIMITS OF THE CONCRETE BRIDGING, ALL DIMENSIONS SHALL REFER TO THE BELL OF THE PIPE.

STORM DRAIN PIPE OVER WATER LINE

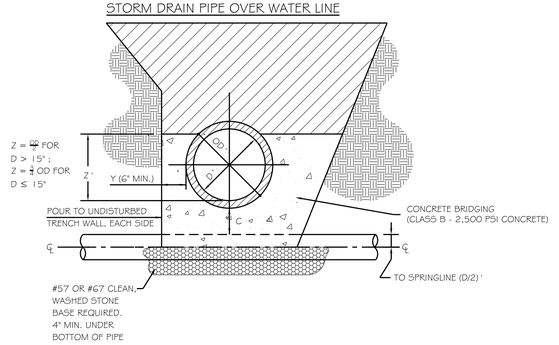

CONCRETE BRIDGING DETAIL
NOT TO SCALE

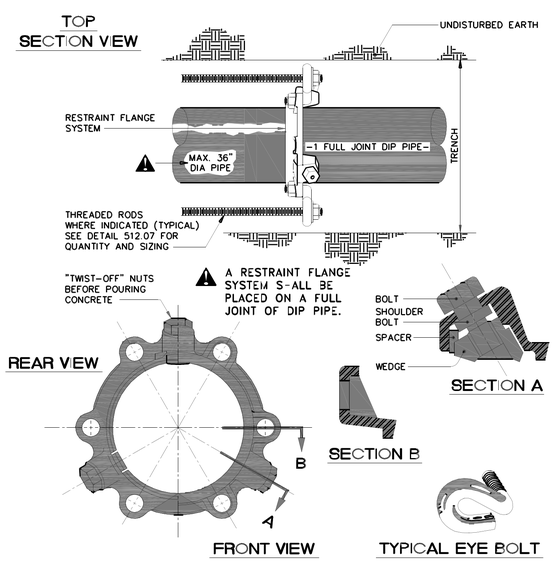

NOTES
1. Backfill and compact in 6" layers.
2. Place restraint flange on one full joint of pipe.

BLOCKING WITH RESTRAINT FLANGE SYSTEM
NOT TO SCALE

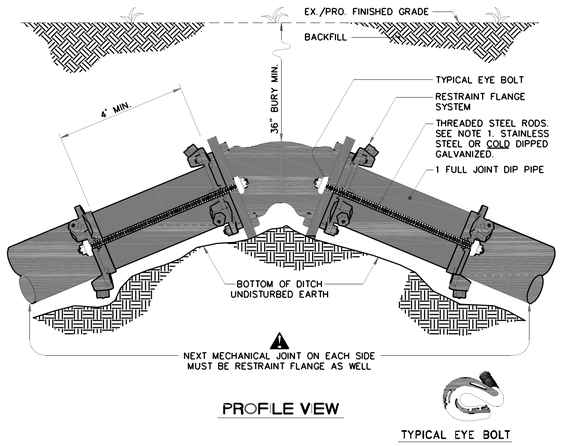

NOTES
1. If 36" bury depth is not maintained or if the line is located in high pressure zone, a minimum of (2) 3/4" dia. rods to be used for pipe thru 24" dia. per joint – a minimum of (2) 1" dia. rods to be used for pipe 30" & 36" dia. per joint – a minimum of (2) 1 1/4" dia. rods to be used for pipe 42" & 48" dia. per joint. (See detail 512.07)
2. Use of grip rings in lieu of restraint flange system shall be permitted on a case by case basis by the Public Services Director.

STANDARD VERTICAL BEND DETAIL
NOT TO SCALE

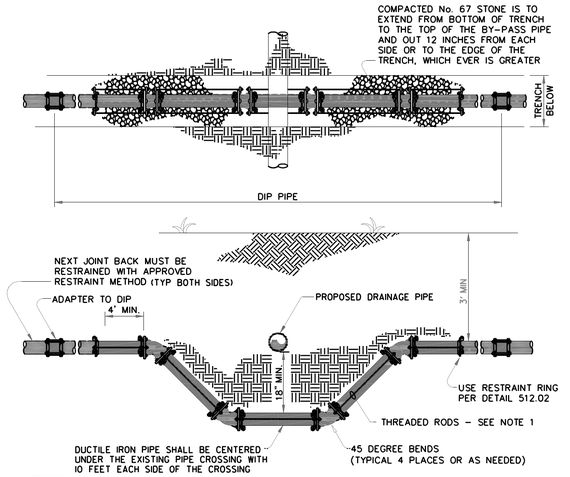

NOTES:
1. A minimum of (2) 3/4" dia. rods to be used for pipe thru 24" dia. per joint
   A minimum of (2) 1" dia. rods to be used for pipe 30" & 36" dia. per joint
   A minimum of (2) 1 1/4" dia. rods to be used for pipe 42" & 48" dia. per joint.
   Coat all exposed metal and rods with 2 coats of field applied coal tar epoxy.
2. The bypass is to be assembled above ground first.
3. Record all as-built lengths using the center lines of the pipes or bends as reference points.
4. Adapters vary in type according to the material of the existing water main.
5. Use of grip rings in lieu of restraint flange system shall be permitted on a case by case basis by the Public Services Director.

WATER DOWN AND UNDER RELOCATION DETAIL
NOT TO SCALE

PROJECT REFERENCE NO.	SHEET NO.
U-5319	UC-3A

DESIGNED BY: GJB
DRAWN BY: GJB
CHECKED BY: KCZ
APPROVED BY: KCZ
REVISED:

NORTH CAROLINA DEPARTMENT OF TRANSPORTATION
UTILITIES ENGINEERING SEC.
PHONE:(919)707-6690
FAX:(919)250-4151

NORTH CAROLINA PROFESSIONAL SEAL 027661 ENGINEER KEVIN C. ZOPF
Docusigned by: SEAL
2/23/2018

UTILITY CONSTRUCTION PLANS ONLY

UTILITY CONSTRUCTION

M A Engineering Consultants, Inc.
598 East Chatham Street - Suite 137
Cary, NC 27511
Phone: 919.297.0220 Fax: 919.297.0221
NC License: F-0150

DOCUMENT NOT CONSIDERED FINAL UNTIL ALL SIGNATURES ARE COMPLETED

J:\96\020\124006.31\Roadway\Utilities\ProjU-5319_ut_UC-03A_det.dgn
2/23/2018
2:52:45 PM

DocuSign Envelope ID: E627A472-E538-4CCC-8837-87CD11743EDB

5/14/99

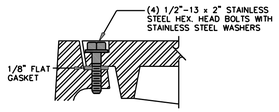

WATERTIGHT DETAIL

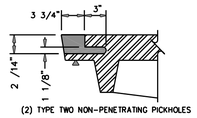

(2) TYPE TWO NON-PENETRATING PICKHOLES

PICKHOLE DETAIL

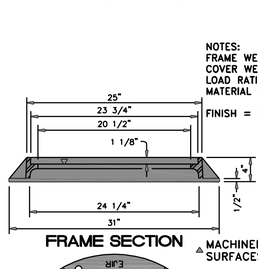

FRAME SECTION

△ MACHINED SURFACES

NOTES:
FRAME WEIGHT = 100 LBS.
COVER WEIGHT = 141 LBS.
LOAD RATING = HEAVY DUTY
MATERIAL = ASTM A 48 CLASS 30
FINISH = UNCOATED

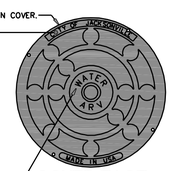

COVER FACE

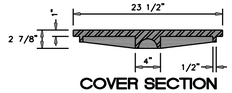

COVER SECTION

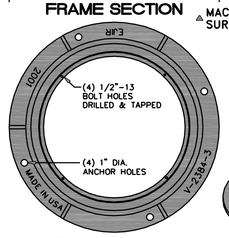

FRAME TOP VIEW

ISOMETRIC

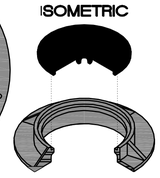

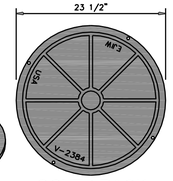

COVER BACK

NOTES:
1. This casting is to be cast-in precast flat tops for round structures.

STANDARD MANHOLE COVER & RING "CAST-IN" FLAT TOP APPLICATION
NOT TO SCALE

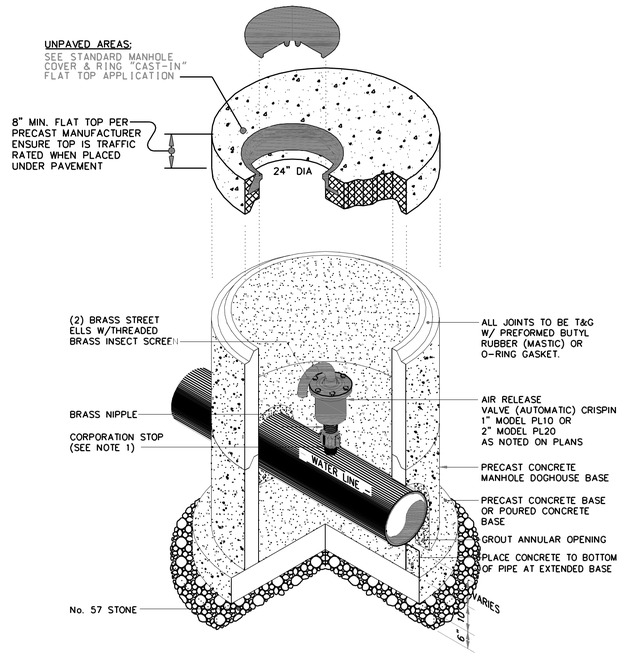

NOTES
1. Do not exceed allowable direct tap allowed by pipe manufacturer. Otherwise, use double strap service saddle for 2" air release.
2. Cone section may be substituted for flat top according to depth and in roadway applications.

AIR RELEASE VALVE IN PRECAST FLAT TOP MANHOLE
NOT TO SCALE

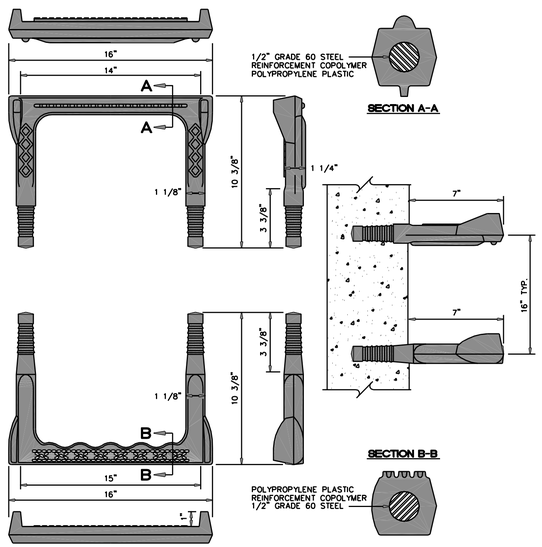

NOTES
1. Step design, installation, and material shall meet the requirements of ASTM C478 and NCDOT.
2. Plastic material consists of super high impact resistant copolymer polypropylene and conform to specific requirements as detailed in ASTM D4101.
3. Reinforcing steel shall be 1/2" rebar, grade 60 and meet the requirements of ASTM A615.
4. Step width and spacing to be consistant with the latest requirements of OS-A.

STANDARD POLYPROPYLENE PLASTIC STEP DETAIL
NOT TO SCALE

PROJECT REFERENCE NO.	SHEET NO.
U-5319	UC-3B
DESIGNED BY: GJB	
DRAWN BY: GJB	
CHECKED BY: KCZ	
APPROVED BY: KCZ	
REVISED:	

NORTH CAROLINA DEPARTMENT OF TRANSPORTATION
UTILITIES ENGINEERING SEC.
PHONE:(919)707-6690
FAX:(919)250-4151

NORTH CAROLINA PROFESSIONAL SEAL 32661 ENGINEER KEVIN C. ZOEB
Document is signed by SEAL
2/23/2018

UTILITY CONSTRUCTION PLANS ONLY

UTILITY CONSTRUCTION

M A Engineering Consultants, Inc.
598 East Chatham Street - Suite 137
Cary, NC 27511
Phone: 919.297.0220 Fax: 919.297.0221
NC License: F-0160

DOCUMENT NOT CONSIDERED FINAL UNTIL ALL SIGNATURES ARE COMPLETED

2/27/2018
...\96\020\12400\Utilities\Proj\U-5319_ut_UC-03B_det.dgn
24-bit

DocuSign Envelope ID: 1EB20394-7C2F-490E-93B9-5148D737405D

5/14/99

BEGIN TIP PROJECT U-5319
-L- POT STA 25+00.00

16" WATER LINE - 35 LF
ABANDON 16" UTILITY PIPE - 31 LF
SEE NOTES 4 & 5 ON THIS SHEET.

12" WATER LINE - 35 LF
ABANDON 12" UTILITY PIPE - 30 LF
SEE NOTES 4 & 5 ON THIS SHEET.

SEE NOTE 8 ON THIS SHEET.

SEE NOTE 8 ON THIS SHEET.

16" WATER LINE - 35 LF.
ABANDON 16" UTILITY PIPE - 31 LF.
SEE NOTES 4 & 5 ON THIS SHEET.

12" WATER LINE - 41 LF.
ABANDON 12" UTILITY PIPE - 42 LF.
2" AIR RELEASE VALVE - 1 EA.
REMOVE UTILITY MANHOLE - 1 EA.
SEE NOTES 2 & 6 ON THIS SHEET.

CLASS B CONCRETE FOR ENCASING UTILITY LINES - 1 CY.
SEE NOTE 7 ON THIS SHEET.

12" WATER LINE - 170 LF
ABANDON 12" UTILITY PIPE - 160 LF.
SEE NOTE 2 ON THIS SHEET.

NOTES:
1. OPEN TRENCH CONSTRUCTION SHALL PROVIDE 3 FEET MINIMUM COVER FROM FINAL GRADE TO TOP OF PIPE.
2. WATER LINE SHALL BE INSTALLED A MINIMUM OF 5 FEET INSIDE THE PROPOSED RIGHT OF WAY.
3. LOCATION OF EXISTING PIPE AT TIE-IN POINTS IS ESTIMATED BASED ON TEST HOLE REPORT PROVIDED BY OTHERS. CONTRACTOR SHALL FIELD VERIFY PIPE LOCATION BEFORE STARTING ANY WORK.
4. PROPOSED "DOWN AND UNDER" RELOCATION OF WATER LINE IN SAME HORIZONTAL LOCATION TO CLEAR VERTICAL CONFLICT WITH PROPOSED DRAINAGE PIPE. SEE DETAIL ON SHEET UC-3A.
5. DUCTILE IRON PIPE SHALL BE USED FOR ALL "DOWN AND UNDER" WATER LINE RELOCATIONS.
6. PROPOSED HORIZONTAL RELOCATION TO CLEAR CONFLICT WITH PROPOSED DRAIN INLET #0434.
7. ANALYSIS OF WATER LINE TEST HOLE DATA AND PROPOSED DRAINAGE PIPE DATA PROVIDED BY OTHERS RESULTS IN A 1.31 FT CLEARANCE BETWEEN THE TOP OF EXISTING WATER LINE AND BOTTOM OF PROPOSED 15" RCP. CONTRACTOR SHALL INSTALL CONCRETE BRIDGING AS PER DETAIL ON SHEET UC-3A DURING INSTALL OF DRAINAGE PIPE.
8. CONTRACTOR SHALL FIELD VERIFY THE LOCATION OF WATER LINES ALONG FRONTAGE OF PARCELS 5 AND 6 BEFORE INSTALLING GUARDRAIL.

UTILITY OWNER ON THIS PROJECT:

CITY OF JACKSONVILLE
UTILITY: 12", 16" WATER
CONTACT: MICHAEL MOORE
PHONE: 910-938-5332

NOTE:
THE ESTIMATED QUANTITY OF DUCTILE IRON WATER PIPE FITTINGS ON THIS PLAN SHEET IS 5,105 POUNDS. THE ACTUAL QUANTITY AND TYPE OF FITTINGS WILL VARY BASED ON FIELD CONDITIONS.

PROJECT REFERENCE NO.	SHEET NO.
U-5319	UC-4
DESIGNED BY: GJB	
DRAWN BY: GJB	
CHECKED BY: KCZ	
APPROVED BY: KCZ	
REVISED:	
NORTH CAROLINA DEPARTMENT OF TRANSPORTATION	
UTILITIES ENGINEERING SEC. PHONE:(919)707-6690 FAX:(919)250-4151	

NORTH CAROLINA PROFESSIONAL SEAL 27611 ENGINEER KEVIN C. ZOEB
DocuSigned by: Kevin C. Zoeb
3/15/2018

UTILITY CONSTRUCTION PLANS ONLY

UTILITY CONSTRUCTION

M A Engineering Consultants, Inc.
598 East Chatham Street - Suite 137
Cary, NC 27511
Phone: 919.297.0220 Fax: 919.297.0221
NC License: F-0160

DOCUMENT NOT CONSIDERED FINAL UNTIL ALL SIGNATURES ARE COMPLETED

NAD 83/2007

7/05/2018
I:\2016\016396\020\1240\Utilities\Proj\U-5319_ut_UC-04.psh.dgn
10:45:04 AM

DocuSign Envelope ID: E627A472-E538-4CCC-8837-87CD11743EDB

PROJECT REFERENCE NO.	SHEET NO.
B-5319	UC-5

DESIGNED BY: GJB
DRAWN BY: GJB
CHECKED BY: KCZ
APPROVED BY: KCZ
REVISED:

NORTH CAROLINA DEPARTMENT OF TRANSPORTATION
UTILITIES ENGINEERING SEC.
PHONE:(919)707-6690
FAX:(919)250-4151

NORTH CAROLINA PROFESSIONAL SEAL 27611 ENGINEER KEVIN C. ZDEB
Docu Signed by: Kevin C. Zdeb
2/23/2018
UTILITY CONSTRUCTION PLANS ONLY

UTILITY CONSTRUCTION

M A Engineering Consultants, Inc.
598 East Chatham Street • Suite 137
Cary, NC 27511
Phone: 919.297.0220 Fax: 919.297.0221
NC License: F-0160

DOCUMENT NOT CONSIDERED FINAL UNTIL ALL SIGNATURES ARE COMPLETED

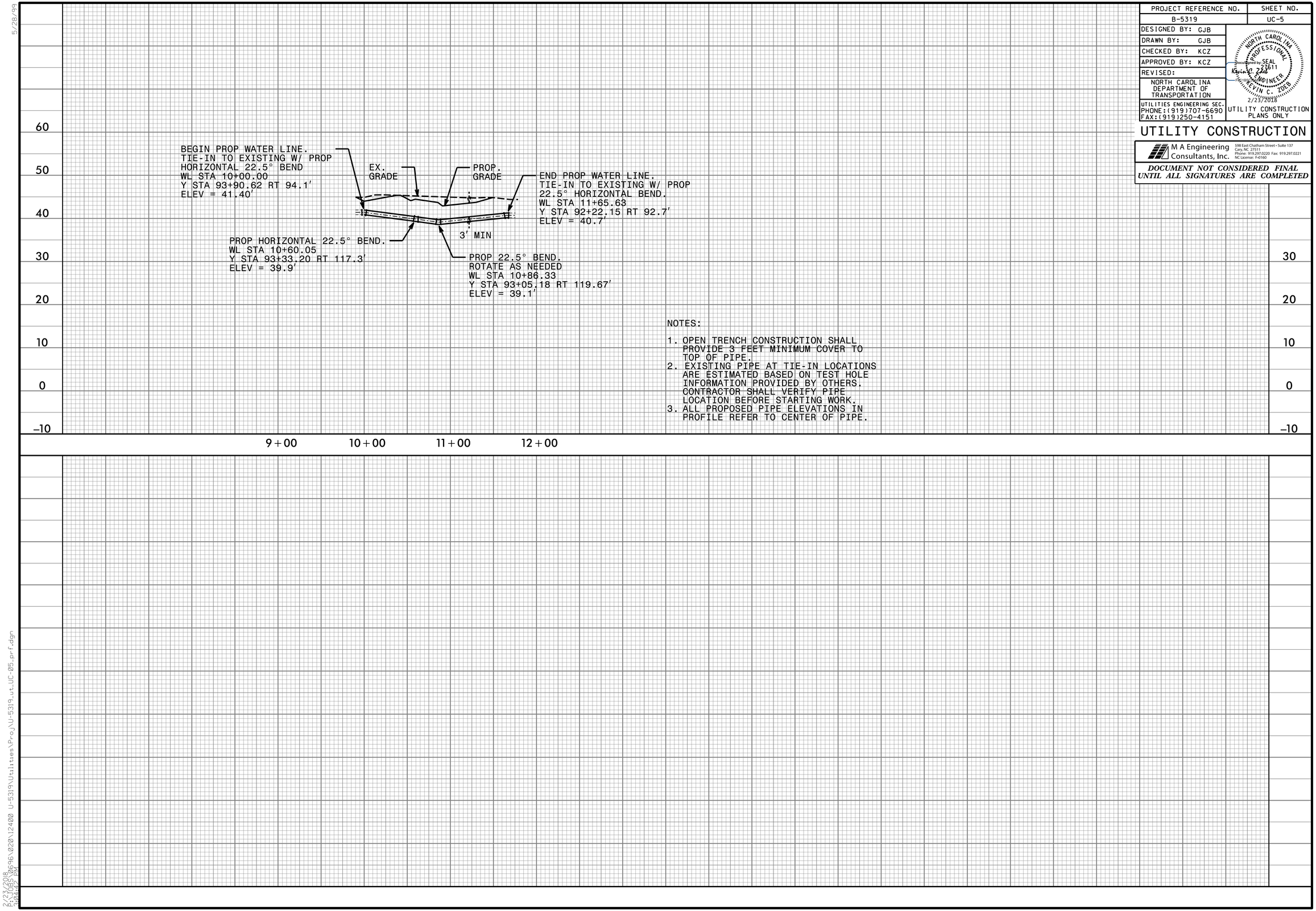

NOTES:

1. OPEN TRENCH CONSTRUCTION SHALL PROVIDE 3 FEET MINIMUM COVER TO TOP OF PIPE.
2. EXISTING PIPE AT TIE-IN LOCATIONS ARE ESTIMATED BASED ON TEST HOLE INFORMATION PROVIDED BY OTHERS. CONTRACTOR SHALL VERIFY PIPE LOCATION BEFORE STARTING WORK.
3. ALL PROPOSED PIPE ELEVATIONS IN PROFILE REFER TO CENTER OF PIPE.

5/28/99
2/23/2018
P:\JOBS\0696\020\12400 U-5319\Utilities\Proj\U-5319_ut_UC-05_prf.dgn
3:04:42 PM

TIP PROJECT: U–5319

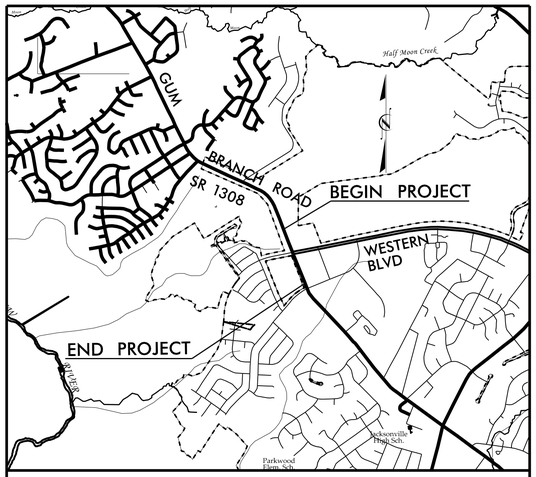

VICINITY MAP

STATE OF NORTH CAROLINA
DIVISION OF HIGHWAYS

UTILITIES BY OTHERS PLANS
ONSLOW COUNTY

T.I.P. NO.	SHEET NO.
U–5319	UO–1

NOTE:
ALL UTILITY WORK SHOWN ON THIS SHEET IS DONE BY OTHERS.
NO PAYMENT WILL BE MADE TO THE CONTRACTOR FOR UTILITY WORK SHOWN ON THIS SHEET.

LOCATION: INTERSECTION OF SR 1308 (GUM BRANCH ROAD) AND NC 53 (WESTERN BOULEVARD)

TYPE OF WORK: RELOCATE GAS, CATV AND PHONE

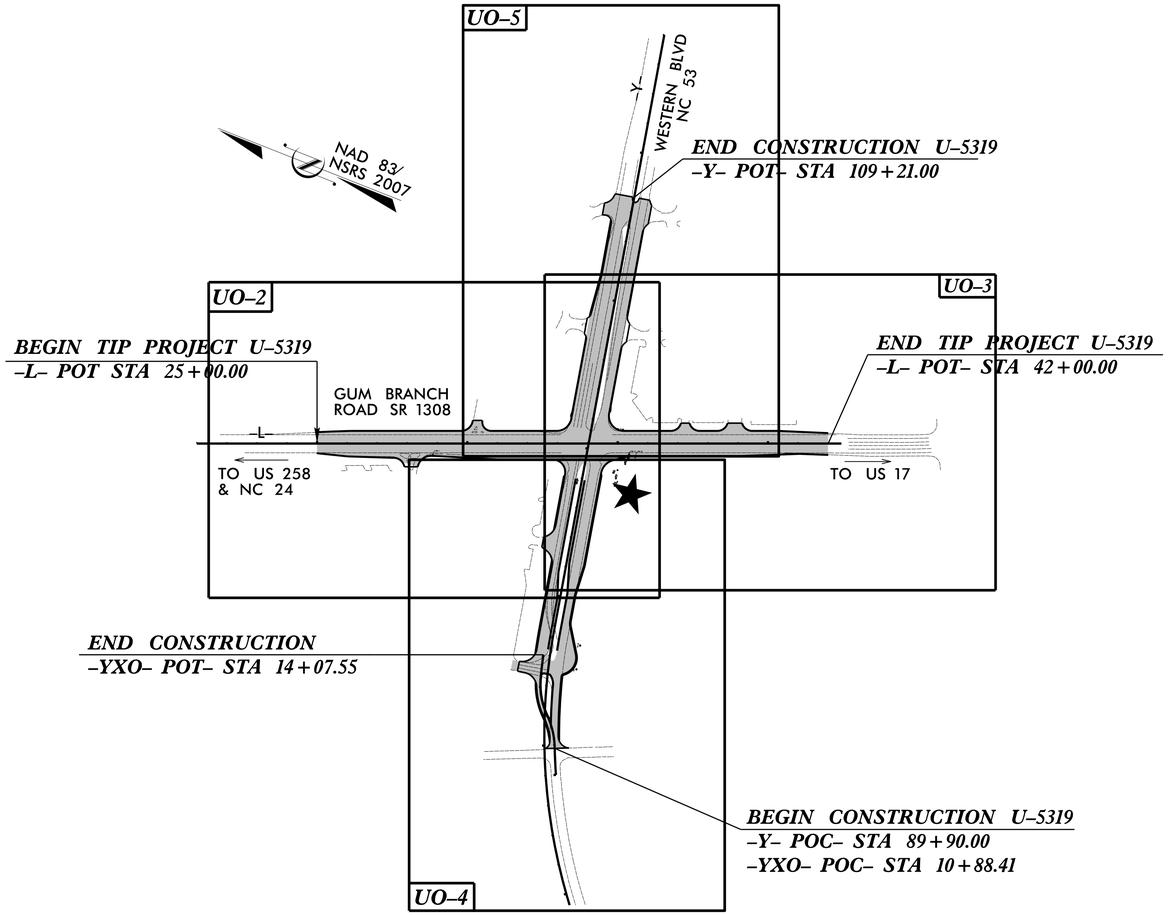

GRAPHIC SCALES

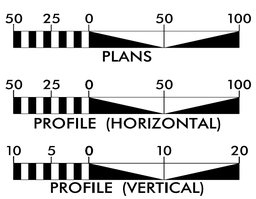

INDEX OF SHEETS

SHEET NO.:	DESCRIPTION:
UO–1	TITLE SHEET
UO–2 THRU UO–5	UBO PLAN SHEETS

UTILITY OWNERS WITH CONFLICTS

(A) PHONE – CENTURYLINK
(B) CATV – SPECTRUM
(C) GAS – PNG
(D) POWER – CITY OF JACKSONVILLE

PREPARED IN THE OFFICE OF:

M A Engineering Consultants, Inc.
NC License: F-0160
598 East Chatham Street Suite 137 Cary, NC 27511
Phone: 919.297.0220 Fax: 919.297.0221

WEBB WHITE — UTILITY PROJECT MANAGER
STEVE DAVIS — DIVISION UTILITY COORDINATOR
LONNY SLEEPER — DIVISION UTILITY COORDINATOR

NCDOT
DIVISION 3
5501 BARBADOS BLVD.
CASTLE HAYNE NC 28429
PHONE (910) 341-2000
FAX (910) 259-4451

MICHAEL BASS — DIVISION DESIGN CONSTRUCT ENGINEER

PROJECT REFERENCE NO.	SHEET NO.
U-5319	UO-2
THIS SHEET CORRESPONDS TO RDY- 4	

UTILITIES BY OTHERS

ALL PROPOSED UTILITY WORK SHOWN ON THIS SHEET WILL BE DONE BY OTHERS. NO PAYMENT WILL BE MADE TO THE CONTRACTOR FOR PROPOSED UTILITY WORK SHOWN ON THIS SHEET.

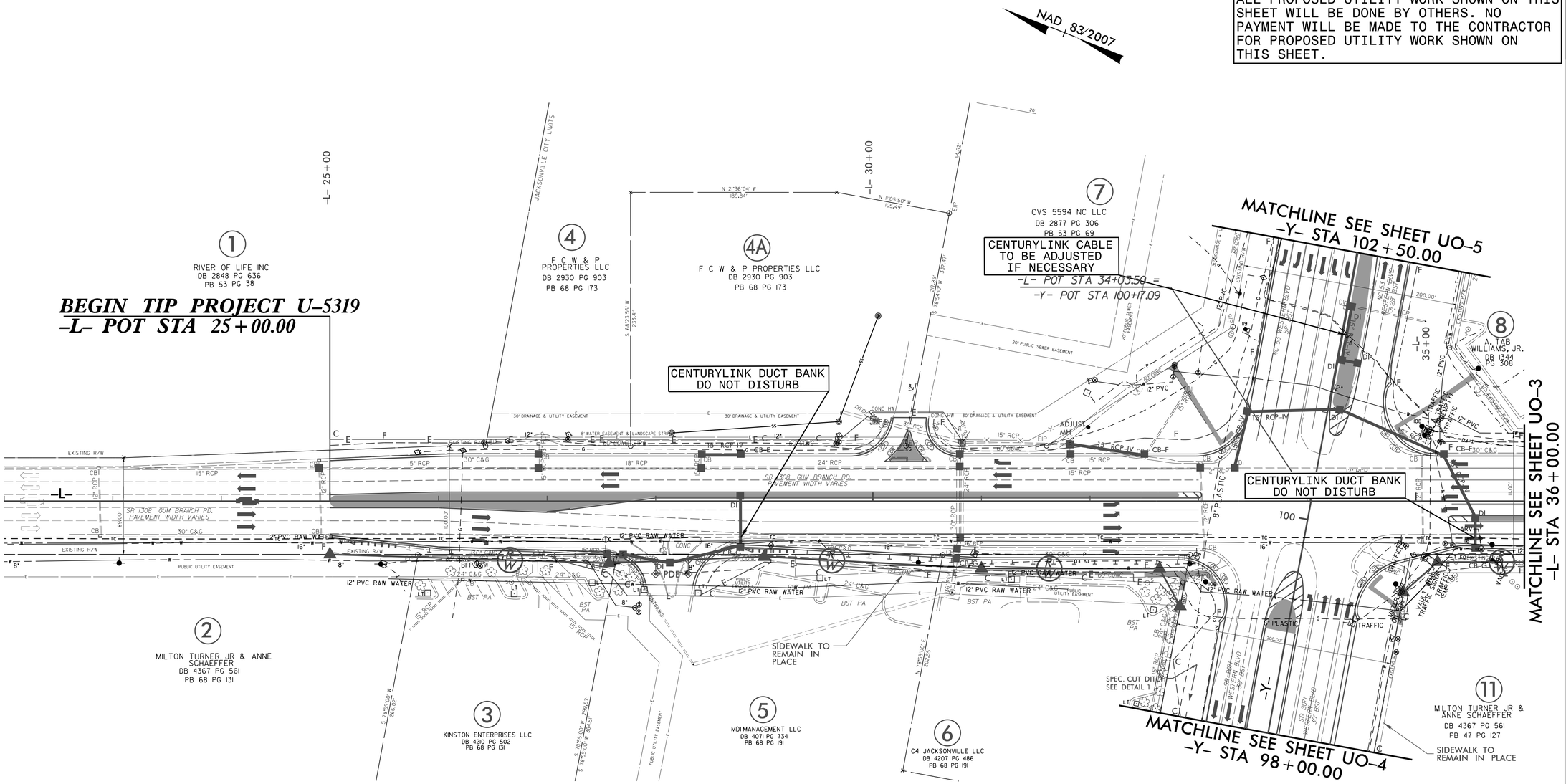

PROJECT REFERENCE NO.	SHEET NO.
U-5319	UO-3
THIS SHEET CORRESPONDS TO RDY- 5	

UTILITIES BY OTHERS

ALL PROPOSED UTILITY WORK SHOWN ON THIS SHEET WILL BE DONE BY OTHERS. NO PAYMENT WILL BE MADE TO THE CONTRACTOR FOR PROPOSED UTILITY WORK SHOWN ON THIS SHEET.

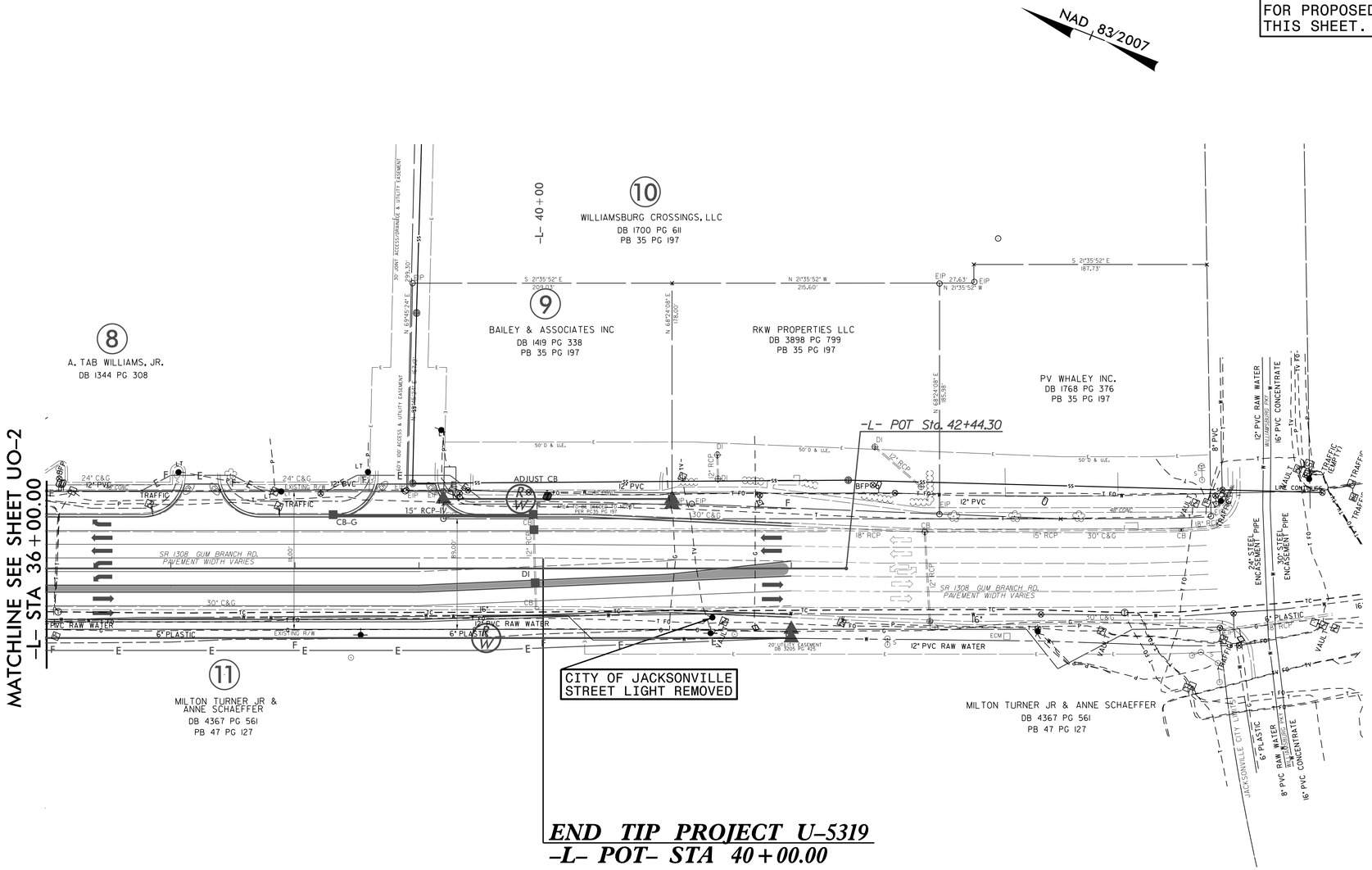

PROJECT REFERENCE NO.	SHEET NO.
U-5319	UO-4
THIS SHEET CORRESPONDS TO RDY- 6	

UTILITIES BY OTHERS

ALL PROPOSED UTILITY WORK SHOWN ON THIS SHEET WILL BE DONE BY OTHERS. NO PAYMENT WILL BE MADE TO THE CONTRACTOR FOR PROPOSED UTILITY WORK SHOWN ON THIS SHEET.

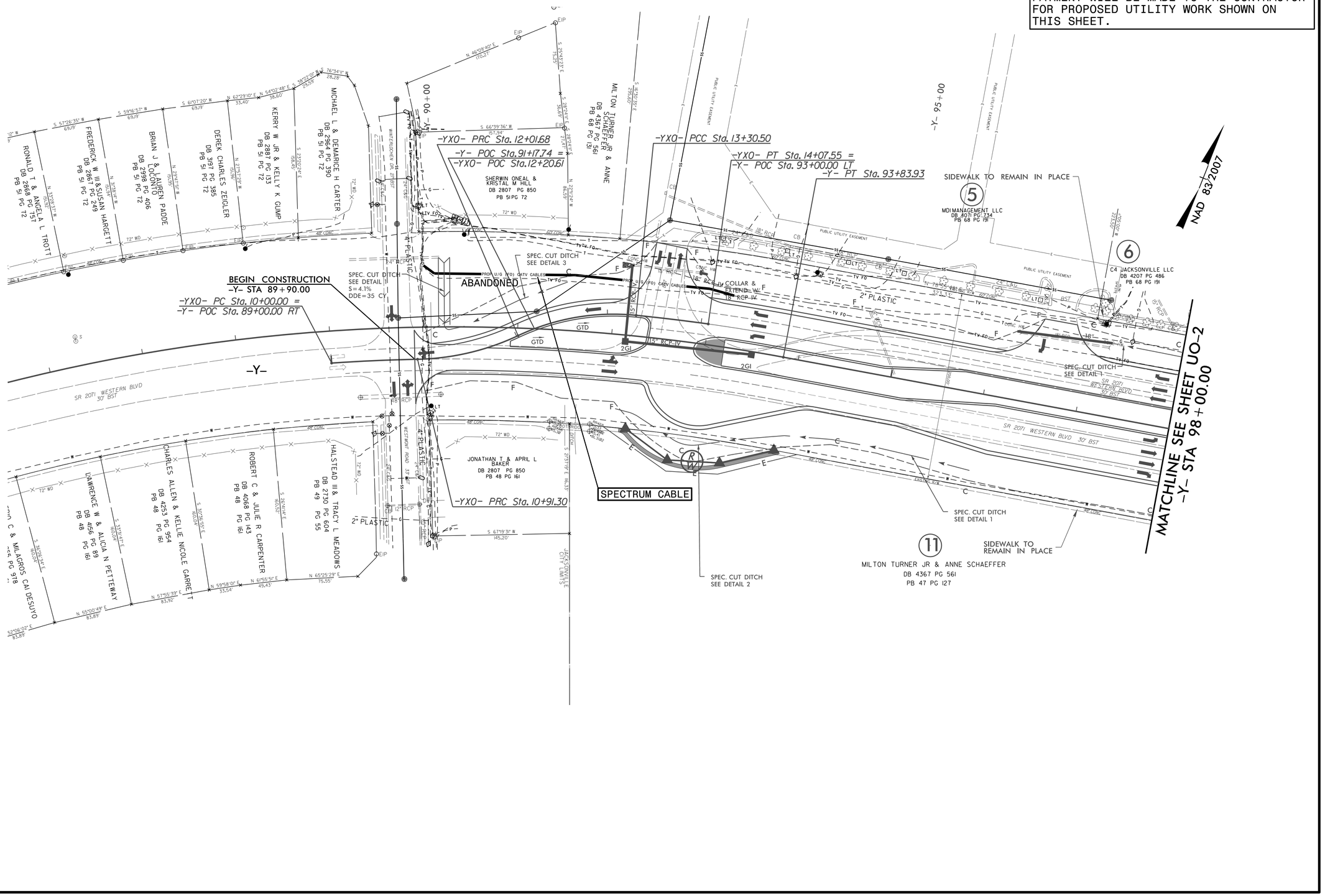
NAD 83/2007
BEGIN CONSTRUCTION
-Y- STA 89+90.00
-YXO- PC Sta. 10+00.00 =
-Y- POC Sta. 89+00.00 RT
-YXO- PRC Sta. 12+01.68
-Y- POC Sta. 91+17.74 =
-YXO- POC Sta. 12+20.61
-YXO- PCC Sta. 13+30.50
-YXO- PT Sta. 14+07.55 =
-Y- POC Sta. 93+00.00 LT
-Y- PT Sta. 93+83.93
-YXO- PRC Sta. 10+91.30
-Y- 90+00
-Y- 95+00
SIDEWALK TO REMAIN IN PLACE
ABANDONED
SPECTRUM CABLE
SPEC. CUT DITCH SEE DETAIL 3
SPEC. CUT DITCH SEE DETAIL 1
SPEC. CUT DITCH SEE DETAIL 2
SR 2071 WESTERN BLVD 30' BST
MATCHLINE SEE SHEET UO-2 -Y- STA 98+00.00
RONALD T & ANGELA L TROTT DB 2868 PG 757 PB 51 PG 72
FREDERICK W III & SUSAN HARGETT DB 4367 PG 249 PB 51 PG 72
BRIAN J & LAUREN PADDE DB 2398 PG 406 PB 51 PG 72
DEREK CHARLES ZEGLER DB 3197 PG 385 PB 51 PG 72
KERRY W JR & KELLY K GUMP DB 2887 PG 133 PB 51 PG 72
MICHAEL L & DEMARICE H CARTER DB 2964 PG 390 PB 51 PG 72
SHERWIN ONEAL & KRISTAL M HILL DB 2807 PG 850 PB 51PG 72
MILTON TURNER JR & ANNE SCHAEFFER DB 4367 PG 561 PB 68 PG 131
MDI MANAGEMENT LLC DB 4071 PG 134 PB 68 PG 191
C4 JACKSONVILLE LLC DB 4207 PG 486 PB 68 PG 191
MILTON TURNER JR & ANNE SCHAEFFER DB 4367 PG 561 PB 47 PG 127
JONATHAN T & APRIL L BAKER DB 2807 PG 850 PB 48 PG 161
CHARLES ALLEN & KELLIE NICOLE GARRETT DB 4253 PG 954 PB 48 PG 161
LAWRENCE W & ALICIA N PETTENAY DB 4156 PG 89 PB 48 PG 161
ROBERT C & JULIE R CARPENTER DB 4068 PG 143 PB 48 PG 161
HALSTEAD III & TRACY L MEADOWS DB 2730 PG 604 PB 49 PG 55
JUAN C & MILAGROS CAI DESUYO DB 4[illegible] PG 978
2" PLASTIC
4" PLASTIC
18" RCP
15" RCP
24" CMP
48" CONC
72" WD
WESTMONT ROAD 33' PUBLIC UTILITY EASEMENT
PUBLIC UTILITY EASEMENT
TV FO
GTD
2GI
CNNC HW
PROP U/G (FO) CATV CABLES
18" RCP IV COLLAR & EXTEND W/ 18" RCP IV
S 67°19'31" W 145.20'
N 65°25'29" E 75.55'
N 59°58'00" E 33.54'
N 61°55'51" E 49.43'
N 57°55'39" E 83.92'
N 55°00'49" E 83.89'
S 52°06'02" E 83.89'
S 36°26'33" E 160.04'
S 33°59'41" E 160.04'
S 30°56'55" E 160.04'
S 28°41'18" E 160.52'
S 23°20'24" E 158.45'
S 21°51'29" W 158.45'
S 20°41'50" W 158.45'
S 19°59'41" W 158.45'
S 18°58'34" W 158.45'
S 17°57'27" W 158.45'
S 59°16'57" W 69.19'
S 61°07'20" W 69.19'
N 62°29'10" E 33.40'
N 64°02'48" E 58.60'
S 38°29'01" E 29.39'
N 76°34'01" W 28.28'
N 46°09'40" E 110.27'
S 25°43'23" E 75.25'
S 28°24'24" E 21.47'
S 66°39'36" W 157.94'
N 23°20'24" W 86.59'
S 66°39'36" E 282.00'
S 23°20'24" E 282.00'
N 23°20'24" W 282.00'
S 66°39'36" W

PROJECT REFERENCE NO.	SHEET NO.
U-5319	UO-5
THIS SHEET CORRESPONDS TO RDY- 7	

UTILITIES BY OTHERS

ALL PROPOSED UTILITY WORK SHOWN ON THIS SHEET WILL BE DONE BY OTHERS. NO PAYMENT WILL BE MADE TO THE CONTRACTOR FOR PROPOSED UTILITY WORK SHOWN ON THIS SHEET.

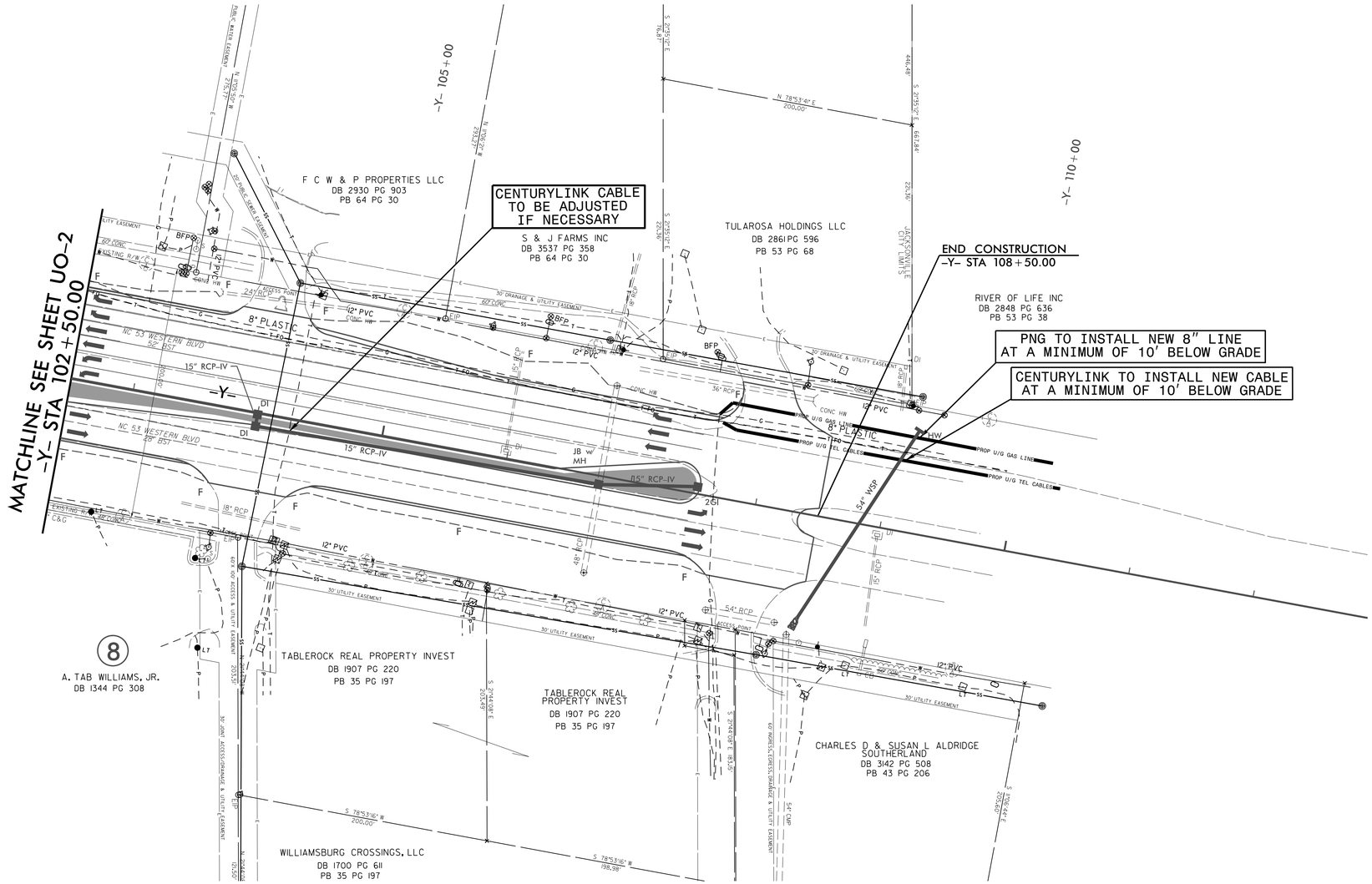

0 5 10	PROJ. REFERENCE NO.	SHEET NO.
	U-5319	X-0

SR 1308 (GUM BRANCH ROAD)
TIP NO. U–5319
CROSS SECTION INDEX

LOCATION	STATION TO STATION	SHEET NO.
–L–	STA. 24 + 00.00 TO STA. 42 + 00.00	X–1 THRU X–6
–Y–	STA. 89 + 00.00 TO STA. 108 + 50.00	X–7 THRU X–15
–YXO–	STA. 10 + 88.41 TO STA. 13 + 46.86	SEE –Y– STA 90 + 50.00 THRU 92 + 00.00 (X–7 THRU X–8)

8/23/99

12-APR-2018 09:21
\Roadway\CorridorModeling\sr1308_RDY_XPL_X-0_SHEET.dgn
HNTB

PROJ. REFERENCE NO.	SHEET NO.
U-5319	X-1A

STATE OF NORTH CAROLINA
DIVISION OF HIGHWAYS

NOTE: EMBANKMENT COLUMN INCLUDES BACKFILL FOR UNDERCUT

CROSS-SECTION SUMMARY

Station L	Uncl. Exc. (cu. yd.)	Embt (cu. yd.)	Undercut Excav (cu. yd.)
25+00.00	0	0	0
25+50.00	17	54	11
26+00.00	21	59	10
26+50.00	25	55	12
27+00.00	28	48	15
27+50.00	42	32	17
28+00.00	64	11	26
28+50.00	74	1	33
29+00.00	75	0	28
29+50.00	78	0	25
30+00.00	61	2	24
30+50.00	43	10	22
31+00.00	41	18	27
31+50.00	41	23	30
32+00.00	43	29	30
32+50.00	39	42	29
33+00.00	35	66	38
33+50.00	18	39	24
34+00.00	9	0	0
34+50.00	12	1	0
35+00.00	41	16	28
35+50.00	56	31	44
36+00.00	35	34	32
36+50.00	32	37	31
37+00.00	29	44	27
37+50.00	25	41	24
38+00.00	28	36	28
38+50.00	29	37	28
39+00.00	33	31	25
39+50.00	35	29	26
40+00.00	27	28	26
40+50.00	23	25	22
41+00.00	19	20	16
41+50.00	15	19	12
42+00.00	15	21	12

Station Y	Uncl. Exc. (cu. yd.)	Embt (cu. yd.)	Undercut Excav (cu. yd.)
90+00.00	0	0	0
90+50.00	47	29	26
91+00.00	75	17	41
91+50.00	51	63	37
92+00.00	22	167	15
92+50.00	64	221	11
93+00.00	172	325	54
93+50.00	187	349	78
94+00.00	94	232	63
94+50.00	42	183	61
95+00.00	48	166	50
95+50.00	71	145	43
96+00.00	84	144	52
96+50.00	83	151	57
97+00.00	76	153	55
97+50.00	106	140	64
98+00.00	128	141	71
98+50.00	143	146	72
99+00.00	128	158	84
99+50.00	71	110	92

Station Y	Uncl. Exc. (cu. yd.)	Embt (cu. yd.)	Undercut Excav (cu. yd.)
101+00.00	0	0	0
101+50.00	28	11	0
102+00.00	15	38	0
102+50.00	16	41	0
103+00.00	18	26	0
103+50.00	19	20	0
104+00.00	15	17	0
104+50.00	13	22	0
105+00.00	13	27	0
105+50.00	10	29	0
106+00.00	10	34	0
106+50.00	11	45	0
107+00.00	12	40	0
107+50.00	18	15	0
108+00.00	11	38	0
108+50.00	0	55	0

8/23/99

0 10	PROJ. REFERENCE NO.	SHEET NO.
	U-5319	X-1

150 140 130 120 110 100 90 80 70 60 50 40 30 20 10 0 10 20 30 40 50 60 70 80 90 100 110 120 130 140 150

50
40

46.42 0.025 47.30 0.025 46.33
27+00.00

50
40

46.55 0.025 47.35 0.025 46.50 0.01
26+50.00

50
40

4:1 46.66 0.025 47.81 0.025 46.63 0.00
47.42
26+00.00

50
40

4:1 46.76 0.025 47.87 0.025 46.82 VAR.
47.52
25+50.00

50
40

4:1 46.84 0.025 47.90 0.025 46.93 4:1
47.63
25+00.00

BEGIN GRADE
–L– STA 25+00.00

50
40

47.74
24+50.00

–L–

SHALLOW UNDERCUT EXCAVATION

150 140 130 120 110 100 90 80 70 60 50 40 30 20 10 0 10 20 30 40 50 60 70 80 90 100 110 120 130 140 150

12-APR-2018 09:21
\Roadway\CorridorModeling\sr1308_rdy_xpl_1.dgn
HNTB

8/23/99

0 10

PROJ. REFERENCE NO.	SHEET NO.
U-5319	X-2

150 140 130 120 110 100 90 80 70 60 50 40 30 20 10 0 10 20 30 40 50 60 70 80 90 100 110 120 130 140 150

50
40

DRIVE
0.025
0.025
46.13
0.02
47.40
30+00.00

EX. RW
0.062
46.12
0.025
0.025
46.06
0.05
47.32
29+50.00

0.087
46.06
0.025
0.025
46.07
0.07
47.27
29+00.00

4:1
0.097
46.06
0.025
0.025
DRIVE
47.27
28+50.00

0.065
46.13
0.025
0.025
DRIVE
47.25
28+00.00

0.032
46.27
0.025
0.025
46.14
4:1
47.27
27+50.00

-L-

SHALLOW UNDERCUT EXCAVATION

(2-APR-2018 09:21)
\Roadway\CorridorModeling\sr1308_rdy_xpl1.dgn
MNT

8/23/99

PROJ. REFERENCE NO.	SHEET NO.
U-5319	X-3

0 10

150 140 130 120 110 100 90 80 70 60 50 40 30 20 10 0 10 20 30 40 50 60 70 80 90 100 110 120 130 140 150

50
40

4:1 47.83 0.010 48.13 0.010 47.69 4:1

33+00.00

50
40

4:1 47.17 0.022 47.98 0.022 46.94 00

32+50.00

50
40

46.87 0.025 47.80 0.025 46.61

32+00.00

50
40

46.72 0.025 47.68 0.025 46.46 0.057

31+50.00

50
40

46.56 0.025 47.58 0.025 46.30 0.032

31+00.00

50
40

DRIVE 0.025 47.48 0.025 46.21

30+50.00

SHALLOW UNDERCUT EXCAVATION

150 140 130 120 110 100 90 80 70 60 50 40 30 20 10 0 10 20 30 40 50 60 70 80 90 100 110 120 130 140 150

12-APR-2018 09:21
\Roadway\Corridor Modeling\sr1308_rdy_xpll.dgn
jNTB

8/23/99

0 10	PROJ. REFERENCE NO.	SHEET NO.
	U–5319	X–4

150 140 130 120 110 100 90 80 70 60 50 40 30 20 10 0 10 20 30 40 50 60 70 80 90 100 110 120 130 140 150

50
40

48.06 0.025 0.025 48.07 4:1
49.10
36+00.00

47.90 0.025 0.025 47.91 4:1
48.97
35+50.00

4:1 47.70 0.025 0.025 47.56 4:1
48.87
35+00.00

–Y– SHEAR 0.010 0.010 –Y– SHEAR
47.99
34+50.00

CENTERLINE INTERSECTION
–L– STA 34+03.50 =
–Y– STA 100+17.09

–Y– SHEAR 0.010 0.010 –Y– SHEAR
47.62
34+00.00

–Y– SHEAR 0.010 0.010 –Y– SHEAR
47.47
33+50.00

–L–

SHALLOW UNDERCUT EXCAVATION

12-APR-2018 09:21
\Roadway\CorridorModeling\sr1308_rdy_xpl1.dgn
INTB

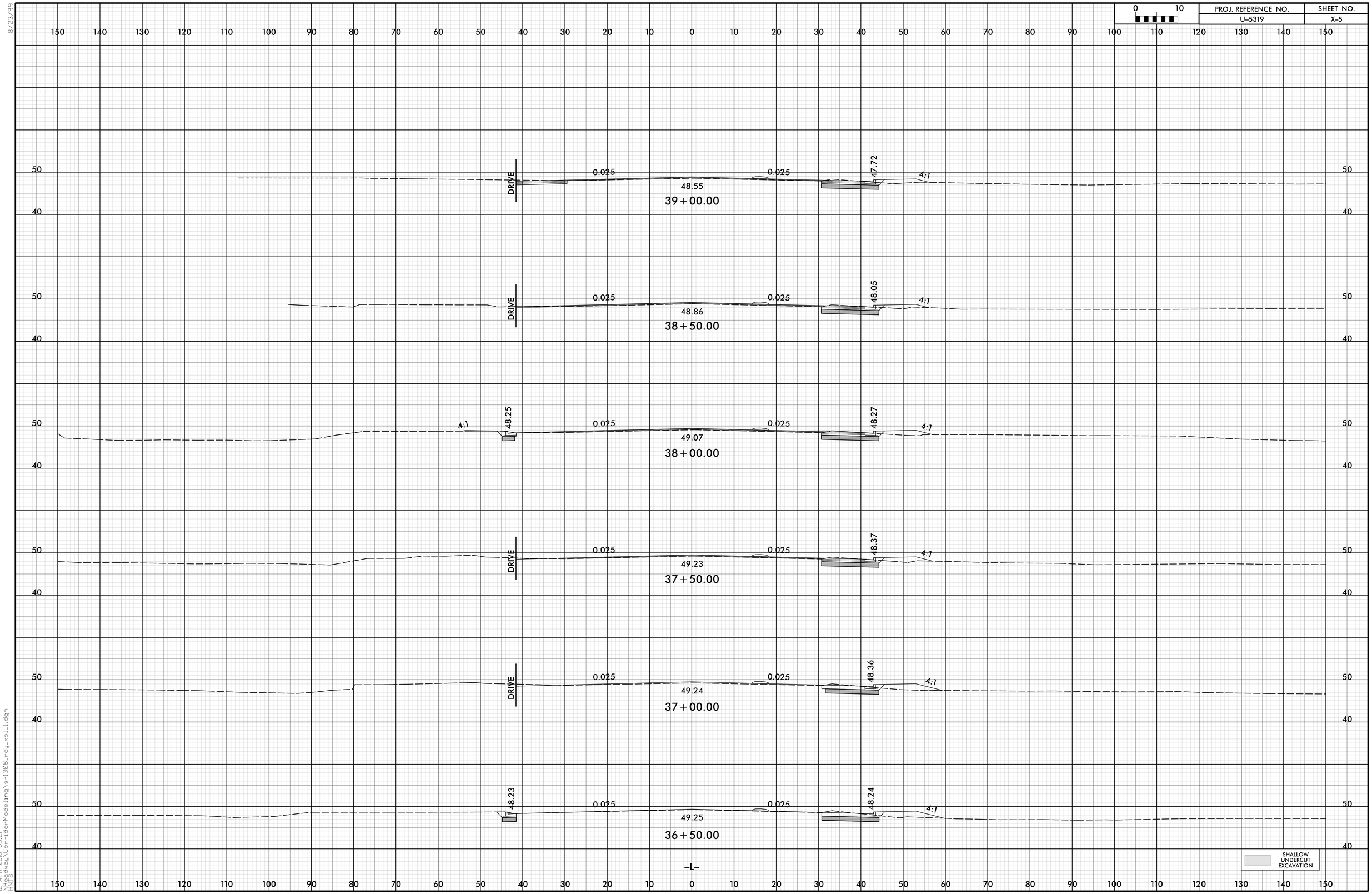

8/23/99

12-APR-2018 09:21
\Roadway\CorridorModeling\sr1308_rdy_xpl_1.dgn
HNTB

8/23/99

0 10	PROJ. REFERENCE NO.	SHEET NO.
	U-5319	X-6

END GRADE
–L– STA 42+00.00

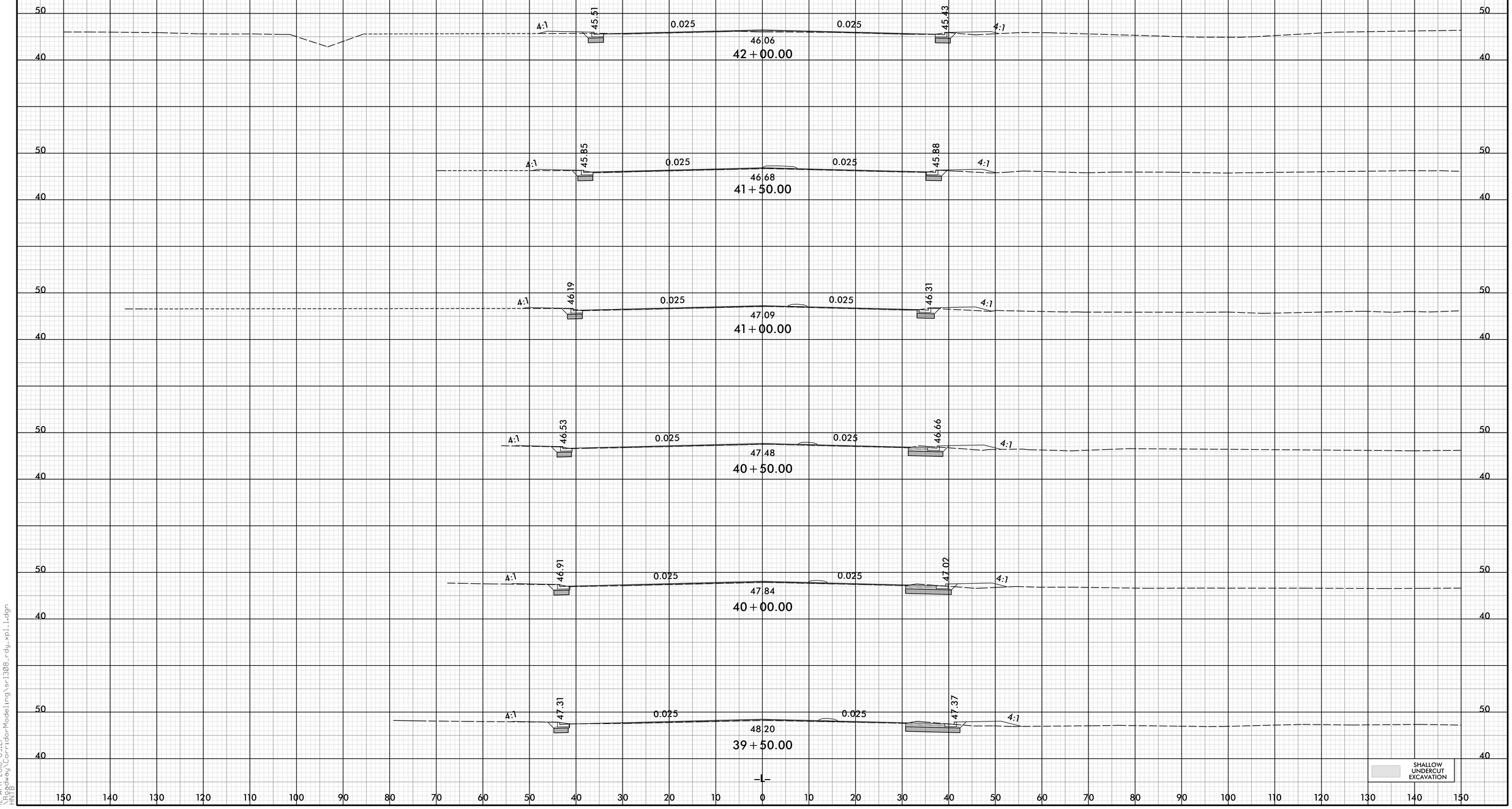

12-APR-2018 09:21
\Roadway\CorridorModeling\sr1308_rdy_xpl1.dgn
MNT

0 5 10

–YXO–
STA. 11+47.99
0.022
0.009
6:1
6:1
42.40
40.46
90+50.00

–YXO–
STA. 10+98.23
0.016
0.003
42.14
90+00.00

BEGIN GRADE
–Y– 89+90.00

41.96
89+50.00

40.33
89+00.00

–Y–

SHALLOW UNDERCUT EXCAVATION

8/23/99
12-APR-2018 09:21
\Roadway\CorridorModeling\sr1308_rdy_xpl_y.dgn
HNTB

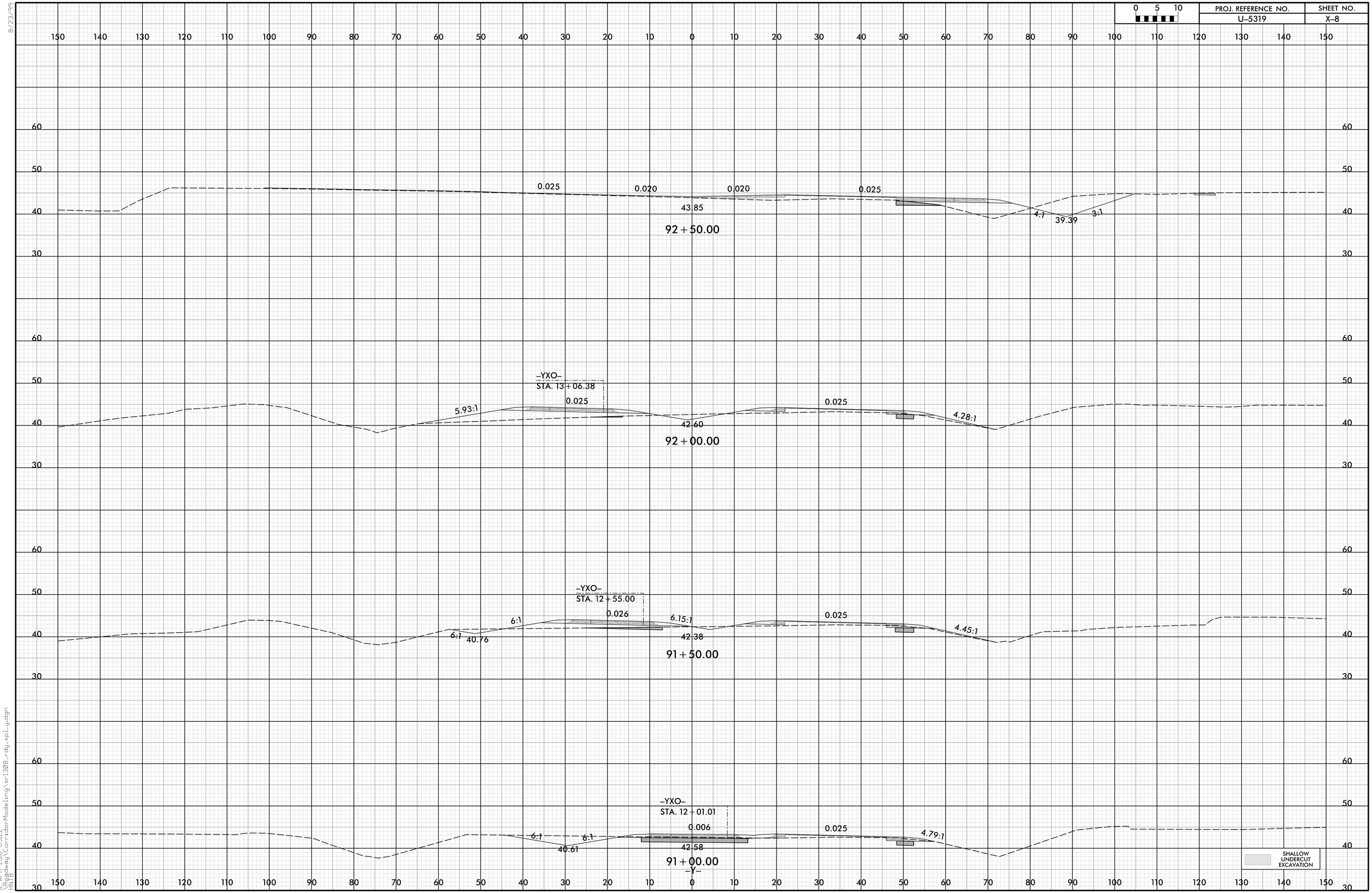

8/23/99
12-APR-2018 09:22
\Roadway\CorridorModeling\sr1308_rdy_xpl_y.dgn
HNTB

8/23/99

0 5 10	PROJ. REFERENCE NO.	SHEET NO.
	U-5319	X-9

150 140 130 120 110 100 90 80 70 60 50 40 30 20 10 0 10 20 30 40 50 60 70 80 90 100 110 120 130 140 150

60 50 40 30

VAR. 0.010 0.025 6:1 6:1 0.010 0.025 6:1 3:1

43.51 43.04 40.88

94+50.00

60 50 40 30

VAR. 0.004 0.025 6:1 6:1 0.004 0.025 6:1 3:1

43.88 42.98 40.82

94+00.00

60 50 40 30

VAR. 0.018 0.025 6:1 6:1 0.018 0.025 4:1 3:1

43.74 42.92 40.08

93+50.00

60 50 40 30

EX. SIDEWALK EX. R/W EX. R/W EX. SIDEWALK EX. SIDEWALK

VAR. 0.025 0.025 0.025 0.025 3:1 4:1

43.12 39.73

93+00.00

–Y–

SHALLOW UNDERCUT EXCAVATION

150 140 130 120 110 100 90 80 70 60 50 40 30 20 10 0 10 20 30 40 50 60 70 80 90 100 110 120 130 140 150

12-APR-2018 09:22
\Roadway\CorridorModeling\sr1308_rdy_xpl_y.dgn
HNTB

8/23/99

0 5 10	PROJ. REFERENCE NO.	SHEET NO.
	U-5319	X-10

150 140 130 120 110 100 90 80 70 60 50 40 30 20 10 0 10 20 30 40 50 60 70 80 90 100 110 120 130 140 150

60 50 40 30

0.025 6:1 6:1 0.025 0.025 6:1 3:1

43.87 43.08 42.28

96+50.00

60 50 40 30

VAR. 0.025 0.025 6:1 6:1 0.025 0.025 6:1 3:1

43.49 42.91 42.06

96+00.00

60 50 40 30

VAR. 0.025 0.025 6:1 6:1 0.025 0.025 6:1 3:1

43.08 42.39 41.59

95+50.00

60 50 40 30

VAR. 0.024 0.025 6:1 6:1 0.024 0.025 3:1

42.77 43.05 41.12

95+00.00

-Y-

SHALLOW UNDERCUT EXCAVATION

150 140 130 120 110 100 90 80 70 60 50 40 30 20 10 0 10 20 30 40 50 60 70 80 90 100 110 120 130 140 150

12-APR-2018_09:22
\Roadway\CorridorModeling\sr1308_rdy_xpl_y.dgn
HNTB

8/23/99

0 5 10	PROJ. REFERENCE NO.	SHEET NO.
	U-5319	X-11

99 + 00.00

0.018 0.018 6:1 6:1 0.012 0.012 6:1 3:1

45.45 44.64 43.95

98 + 50.00

5.97:1 6:1 0.025 0.025 6:1 6:1 0.025 0.025 6:1 3:1

43.36 44.91 43.72 43.32

98 + 00.00

4:1 6:1 0.025 0.025 6:1 6:1 0.025 0.025 6:1 3:1

44.18 44.65 43.47 43.06

97 + 50.00

4:1 6:1 0.025 0.025 6:1 6:1 0.025 0.025 6:1 3:1

43.83 44.39 43.51 42.80

97 + 00.00

45.61 0.025 0.025 6:1 6:1 0.025 0.025 6:1 3:1

44.13 43.18 42.54

-Y-

SHALLOW UNDERCUT EXCAVATION

12-APR-2018 09:22
\Roadway\CorridorModeling\sr1308_rdy_xpl_y.dgn
HNTB

8/23/99

0 5 10	PROJ. REFERENCE NO.	SHEET NO.
	U-5319	X-12

150 140 130 120 110 100 90 80 70 60 50 40 30 20 10 0 10 20 30 40 50 60 70 80 90 100 110 120 130 140 150

60
50
40

0.02 0.02 0.02 0.025

46.82

101+00.00

60
50
40

0.004 0.004 0.004 0.003

47.82

100+50.00

60
50
40
30

0.003 0.003 0.003 0.003

47.48

100+00.00

60
50
40
30

0.004 0.001 0.004 0.035 0.003

6:1 3:1

46.01 44.82

99+50.00

-Y-

SHALLOW UNDERCUT EXCAVATION

150 140 130 120 110 100 90 80 70 60 50 40 30 20 10 0 10 20 30 40 50 60 70 80 90 100 110 120 130 140 150

12-APR-2018 09:22
\Roadway\CorridorModeling\sr1308-rdy_xpl_y.dgn
HNTB

8/23/99

0 5 10	PROJ. REFERENCE NO.	SHEET NO.
	U-5319	X-13

150 140 130 120 110 100 90 80 70 60 50 40 30 20 10 0 10 20 30 40 50 60 70 80 90 100 110 120 130 140 150

60 50 40

VAR. 0.02 0.02 0.02 0.025 3:1

47.72

103+50.00

3:1 0.02 0.02 0.02 0.025 3:1

47.07

103+00.00

3:1 0.02 0.02 0.02 0.025 3:1

46.91

102+50.00

0.02 0.02 0.02 0.025 3:1

45.63

102+00.00

0.02 0.02 0.02 0.025 3:1

46.31

101+50.00

-Y-

12-APR-2018 09:22
\Roadway\CorridorModeling\sr1308_rdy_xpl_y.dgn
HNTB

8/23/99

0 5 10	PROJ. REFERENCE NO.	SHEET NO.
	U-5319	X-14

150 140 130 120 110 100 90 80 70 60 50 40 30 20 10 0 10 20 30 40 50 60 70 80 90 100 110 120 130 140 150

60 50 40

3:1 0.02 0.02 0.02 0.025 3:1

48.24

106+00.00

60 50 40

3:1 0.02 0.02 0.02 0.025 3:1

48.20

105+50.00

60 50 40

3:1 0.02 0.02 0.02 0.025 3:1

48.10

105+00.00

60 50 40

3:1 0.02 0.02 0.02 0.025 3:1

47.85

104+50.00

60 50 40

0.02 0.02 0.02 0.025

47.84

104+00.00

-Y-

150 140 130 120 110 100 90 80 70 60 50 40 30 20 10 0 10 20 30 40 50 60 70 80 90 100 110 120 130 140 150

12-APR-2018 09:23
\Roadway\CorridorModeling\sr1308_rdy_xpl_y.dgn
HNTB

8/23/99

0 5 10	PROJ. REFERENCE NO.	SHEET NO.
	U–5319	X–15

150 140 130 120 110 100 90 80 70 60 50 40 30 20 10 0 10 20 30 40 50 60 70 80 90 100 110 120 130 140 150

60 50 40

0.02 0.02 0.02 0.025

49.00

END CONSTRUCTION
–Y– 108+50.00

0.02 0.02 0.02 0.025

49.32

108+00.00

0.02 0.02 0.02 0.02 0.025 3:1

49.22

107+50.00

0.02 0.02 0.02 0.025 3:1

48.64

107+00.00

3:1 0.02 0.02 0.02 0.025 3:1

48.40

106+50.00

–Y–

12-APR-2018 09:23
\Roadway\CorridorModeling\sr1308_rdy_xpl_y.dgn
HNTB