This electronic collection of documents is provided for the convenience of the user and is Not a Certified Document –

The documents contained herein were originally issued and sealed by the individuals whose names and license numbers appear on each page, on the dates appearing with their signature on that page.

This file or an individual page shall not be considered a certified document.

DocuSign Envelope ID: C2904EB5-536F-4EBA-B6FD-E1F1EBFC4F6D

09/08/99

TIP PROJECT: 17BP.3.R.43

CONTRACT: DC00164

See Sheet 1-A For Index of Sheets
See Sheet 1-B for Conventional Plan Sheet Symbols
See Sheet 1C-1 for Survey Control Sheet

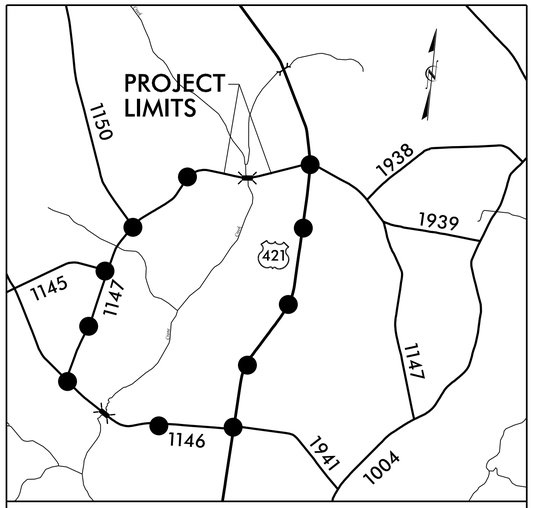

VICINITY MAP

OFFSITE DETOUR

100% SUBMITTAL

STATE OF NORTH CAROLINA
DIVISION OF HIGHWAYS

SAMPSON COUNTY

STATE	STATE PROJECT REFERENCE NO.	SHEET NO.	TOTAL SHEETS
N.C.	17BP.3.R.43	1	

STATE PROJ. NO.	F.A. PROJ. NO.	DESCRIPTION
17BP.3.R.43		P.E.

LOCATION: REPLACE BRIDGE NO. 13 OVER CRANE CREEK ON SR 1147 (MT. GILEAD CHURCH ROAD)

TYPE OF WORK: GRADING, DRAINAGE, PAVING AND STRUCTURE

NAD 83/2011

4

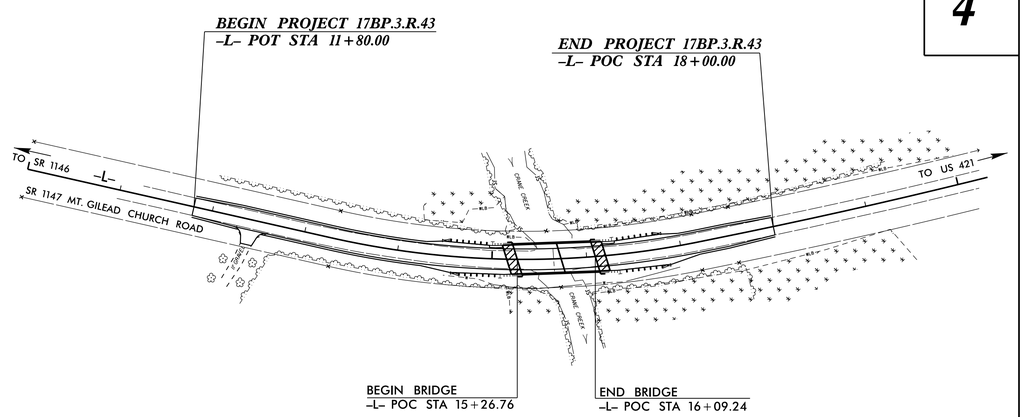

NOTES:

1. CLEARING ON THIS PROJECT SHALL BE PERFORMED TO THE LIMITS ESTABLISHED BY METHOD II.
2. THIS PROJECT IS NOT WITHIN ANY MUNICIPAL BOUNDARIES.

DOCUMENT NOT CONSIDERED FINAL UNLESS ALL SIGNATURES COMPLETED

GRAPHIC SCALES

50 25 0 50 100
PLANS

50 25 0 50 100
PROFILE (HORIZONTAL)

10 5 0 10 20
PROFILE (VERTICAL)

DESIGN DATA

ADT 2013 = 530
ADT 2033 = 1060
K = 10 %
D = 60 %
T = 6 % *
V = 50 MPH
* TTST = 2% DUAL 4%
FUNC CLASS = LOCAL
SUBREGIONAL TIER

PROJECT LENGTH

LENGTH OF ROADWAY PROJECT 17BP.3.R.43	=	0.101 MILES
LENGTH OF STRUCTURE PROJECT 17BP.3.R.43	=	0.016 MILES
TOTAL LENGTH OF PROJECT 17BP.3.R.43	=	0.117 MILES

Prepared in the Office of:

2012 STANDARD SPECIFICATIONS

RIGHT OF WAY DATE:
DECEMBER 17, 2015

LETTING DATE:
MAY 19, 2016

DAVID W. BASS, PE
PROJECT ENGINEER

MONICA J. DUVAL
PROJECT DESIGN ENGINEER

ANTHONY W. LAW
NCDOT CONTACT

HYDRAULICS ENGINEER

DocuSigned by: John F. Watson
SIGNATURE: 4/11/2016 P.E.

NORTH CAROLINA PROFESSIONAL SEAL 039760 ENGINEER JOHN F. WATSON

ROADWAY DESIGN ENGINEER

DocuSigned by: David W. Bass
SIGNATURE: 4/11/2016 P.E.

NORTH CAROLINA PROFESSIONAL SEAL 020107 ENGINEER DAVID W. BASS

STATE OF NORTH CAROLINA DEPARTMENT OF TRANSPORTATION

11-APR-2016 11:32
\\raw00\projects\58177 NCDOT Division On-Call\17BP.3.R.43_Sampson BR013\Roadway\Proj\810013_RDY_TSH.dgn
$$$$USERNAME$$$$

DocuSign Envelope ID: EE42EDFB-2E85-4569-9D16-2B88AF5F33E8

8/17/99

PROJECT REFERENCE NO.	SHEET NO.
17BP.3.R.43	1–A

ROADWAY DESIGN ENGINEER

NORTH CAROLINA PROFESSIONAL SEAL 020107 ENGINEER DAVID W. BASS

DocuSigned by: David W. Bass 3/29/2016

DOCUMENT NOT CONSIDERED FINAL UNLESS ALL SIGNATURES COMPLETED

INDEX OF SHEETS

SHEET NUMBER	SHEET
1	TITLE SHEET
1–A	INDEX OF SHEETS, GENERAL NOTES & LIST OF STANDARDS
1–B	SYMBOLOGY SHEET
1C–1	SURVEY CONTROL SHEET
2A–1	TYPICAL SECTION SHEET
2C–1	STRUCTURE ANCHOR UNITS DETAIL
2C–2	STRUCTURE ANCHOR UNITS DETAIL
3B–1	EARTHWORK, PAVEMENT REMOVAL, GUARDRAIL SUMMARY, SHOULDER BERM GUTTER SUMMARY, ROW SUMMARY, & DRAINAGE SUMMARY SHEET
4	PLAN & PROFILE SHEET
TMP–1 THRU TMP–3	TRAFFIC CONTROL PLANS
EC–1 THRU EC–6	EROSION CONTROL PLANS
UO–1 THRU UO–2	UTILITIES BY OTHERS PLANS
X–1 THRU X–3	–L– CROSS SECTION SHEETS
S–1 THRU S–18	STRUCTURE PLANS

GENERAL NOTES: 2012 SPECIFICATIONS

EFFECTIVE: 01–17–2012
REVISED: 07–30–2012

GRADE LINE:
GRADING AND SURFACING:

THE GRADE LINES SHOWN DENOTE THE FINISHED ELEVATION OF THE PROPOSED SURFACING AT GRADE POINTS SHOWN ON THE TYPICAL SECTIONS. GRADE LINES MAY BE ADJUSTED AT THEIR BEGINNING AND ENDING AND AT STRUCTURES AS DIRECTED BY THE ENGINEER IN ORDER TO SECURE A PROPER TIE–IN.

CLEARING:

CLEARING ON THIS PROJECT SHALL BE PERFORMED TO THE LIMITS ESTABLISHED BY METHOD II.

SUPERELEVATION:

ALL CURVES ON THIS PROJECT SHALL BE SUPERELEVATED IN ACCORDANCE WITH STD. NO. 225.04
SUPERELEVATION IS TO BE REVOLVED ABOUT THE GRADE POINTS SHOWN ON THE TYPICAL SECTIONS.

SHOULDER CONSTRUCTION:

ASPHALT, EARTH, AND CONCRETE SHOULDER CONSTRUCTION ON THE HIGH SIDE OF SUPERELEVATED CURVES SHALL BE IN ACCORDANCE WITH STD. NO. 560.01

SIDE ROADS:

THE CONTRACTOR WILL BE REQUIRED TO DO ALL NECESSARY WORK TO PROVIDE SUITABLE CONNECTIONS WITH ALL ROADS, STREETS, AND DRIVES ENTERING THIS PROJECT. THIS WORK WILL BE PAID FOR AT THE CONTRACT UNIT PRICE FOR THE PARTICULAR ITEMS INVOLVED.

GUARDRAIL:

THE GUARDRAIL LOCATIONS SHOWN ON THE PLANS MAY BE ADJUSTED DURING CONSTRUCTION AS DIRECTED BY THE ENGINEER. THE CONTRACTOR SHOULD CONSULT WITH THE ENGINEER PRIOR TO ORDERING GUARDRAIL MATERIAL.

SUBSURFACE PLANS:

NO SUBSURFACE PLANS ARE AVAILABLE ON THIS PROJECT. THE CONTRACTOR SHOULD MAKE HIS OWN INVESTIGATION AS TO THE SUBSURFACE CONDITIONS.

UTILITIES:

UTILITY OWNERS ON THIS PROJECT ARE

Water – Sampson County

NOTE: CONTRACTOR SHALL CONTACT SAMPSON COUNTY AT LEAST 2 WEEKS PRIOR TO INSTALLING PROPOSED TEMPORARY SHORING FOR REMOVAL OF EXISTING ABUTMENT 2.

Phone – CenturyLink

ANY RELOCATION OF EXISTING UTILITIES WILL BE ACCOMPLISHED BY OTHERS.

RIGHT–OF–WAY MARKERS:

ALL RIGHT–OF–WAY MARKERS ON THIS PROJECT SHALL BE PLACED BY THE CONTRACTOR.

EFF. 01–17–2012
REV. 10–30–2012

2012 ROADWAY ENGLISH STANDARD DRAWINGS

The following Roadway Standards as appear in "Roadway Standard Drawings" Highway Design Branch – N. C. Department of Transportation – Raleigh, N. C., Dated January, 2012 are applicable to this project and by reference hereby are considered a part of these plans:

STD.NO.	TITLE
DIVISION 2 – EARTHWORK	
200.02	Method of Clearing – Method II
225.02	Guide for Grading Subgrade – Secondary and Local
225.04	Method of Obtaining Superelevation – Two Lane Pavement
DIVISION 3 – PIPE CULVERTS	
300.01	Method of Pipe Installation
DIVISION 4 – MAJOR STRUCTURES	
422.10	Reinforced Bridge Approach Fills
DIVISION 5 – SUBGRADE, BASES AND SHOULDERS	
560.01	Method of Shoulder Construction – High Side of Superelevated Curve – Method I
DIVISION 8 – INCIDENTALS	
806.01	Concrete Right–of–way Marker
806.02	Granite Right–of–way Marker
840.00	Concrete Base Pad for Drainage Structures
840.29	Frames and Narrow Slot Flat Grates
840.66	Drainage Structure Steps
846.01	Concrete Curb, Gutter and Curb & Gutter
846.04	Drop Inlet Installation in Shoulder Berm Gutter
862.01	Guardrail Placement
862.02	Guardrail Installation
876.01	Rip Rap in Channels
876.02	Guide for Rip Rap at Pipe Outlets

29-MAR-2016 14:47
\\rail\DP\Projects\58177 NCDOT Division On-Call\17BP.3.R.43_Sampson BR013\Roadway\Proj\810013_rdy_gen_1a.dgn
$$$$USERNAME$$$$

DocuSign Envelope ID: EE42EDFB-2E85-4569-9D16-2B88AF5F33E8

04/06/15

PROJECT REFERENCE NO.	SHEET NO.
17BP.3.R.43	1–B

STATE OF NORTH CAROLINA, DIVISION OF HIGHWAYS

CONVENTIONAL PLAN SHEET SYMBOLS

Note: Not to Scale **S.U.E. = Subsurface Utility Engineering*

BOUNDARIES AND PROPERTY:

- State Line
- County Line
- Township Line
- City Line
- Reservation Line
- Property Line
- Existing Iron Pin — EIP
- Property Corner
- Property Monument — ECM
- Parcel/Sequence Number — 123
- Existing Fence Line
- Proposed Woven Wire Fence
- Proposed Chain Link Fence
- Proposed Barbed Wire Fence
- Existing Wetland Boundary — WLB
- Proposed Wetland Boundary — WLB
- Existing Endangered Animal Boundary — EAB
- Existing Endangered Plant Boundary — EPB
- Existing Historic Property Boundary — HPB
- Known Contamination Area: Soil
- Potential Contamination Area: Soil
- Known Contamination Area: Water
- Potential Contamination Area: Water
- Contaminated Site: Known or Potential

BUILDINGS AND OTHER CULTURE:

- Gas Pump Vent or U/G Tank Cap
- Sign — S
- Well — W
- Small Mine
- Foundation
- Area Outline
- Cemetery
- Building
- School
- Church
- Dam

HYDROLOGY:

- Stream or Body of Water
- Hydro, Pool or Reservoir
- Jurisdictional Stream — JS
- Buffer Zone 1 — BZ 1
- Buffer Zone 2 — BZ 2
- Flow Arrow
- Disappearing Stream
- Spring
- Wetland
- Proposed Lateral, Tail, Head Ditch — FLOW
- False Sump

RAILROADS:

- Standard Gauge — CSX TRANSPORTATION
- RR Signal Milepost — MILEPOST 35
- Switch — SWITCH
- RR Abandoned
- RR Dismantled

RIGHT OF WAY:

- Baseline Control Point
- Existing Right of Way Marker
- Existing Right of Way Line
- Proposed Right of Way Line — RW
- Proposed Right of Way Line with Iron Pin and Cap Marker — RW
- Proposed Right of Way Line with Concrete or Granite R/W Marker — RW
- Proposed Control of Access Line with Concrete C/A Marker — CA
- Existing Control of Access — CA
- Proposed Control of Access — CA
- Existing Easement Line — E
- Proposed Temporary Construction Easement — E
- Proposed Temporary Drainage Easement — TDE
- Proposed Permanent Drainage Easement — PDE
- Proposed Permanent Drainage / Utility Easement — DUE
- Proposed Permanent Utility Easement — PUE
- Proposed Temporary Utility Easement — TUE
- Proposed Aerial Utility Easement — AUE
- Proposed Permanent Easement with Iron Pin and Cap Marker

ROADS AND RELATED FEATURES:

- Existing Edge of Pavement
- Existing Curb
- Proposed Slope Stakes Cut — C
- Proposed Slope Stakes Fill — F
- Proposed Curb Ramp — CR
- Existing Metal Guardrail
- Proposed Guardrail
- Existing Cable Guiderail
- Proposed Cable Guiderail
- Equality Symbol
- Pavement Removal

VEGETATION:

- Single Tree
- Single Shrub
- Hedge
- Woods Line
- Orchard
- Vineyard — Vineyard

EXISTING STRUCTURES:

MAJOR:

- Bridge, Tunnel or Box Culvert — CONC
- Bridge Wing Wall, Head Wall and End Wall — CONC WW

MINOR:

- Head and End Wall — CONC HW
- Pipe Culvert
- Footbridge
- Drainage Box: Catch Basin, DI or JB — CB
- Paved Ditch Gutter
- Storm Sewer Manhole — S
- Storm Sewer — S

UTILITIES:

POWER:

- Existing Power Pole
- Proposed Power Pole
- Existing Joint Use Pole
- Proposed Joint Use Pole
- Power Manhole — P
- Power Line Tower
- Power Transformer
- H–Frame Pole
- U/G Power Line LOS B (S.U.E.*) — P
- U/G Power Line LOS C (S.U.E.*) — P
- U/G Power Line LOS D (S.U.E.*) — P

TELEPHONE:

- Existing Telephone Pole
- Proposed Telephone Pole
- Telephone Manhole — T
- Telephone Pedestal — T
- Telephone Cell Tower
- U/G Telephone Cable Hand Hole — HH
- U/G Telephone Cable LOS B (S.U.E.*) — T
- U/G Telephone Cable LOS C (S.U.E.*) — T
- U/G Telephone Cable LOS D (S.U.E.*) — T
- U/G Telephone Conduit LOS B (S.U.E.*) — TC
- U/G Telephone Conduit LOS C (S.U.E.*) — TC
- U/G Telephone Conduit LOS D (S.U.E.*) — TC
- U/G Fiber Optics Cable LOS B (S.U.E.*) — T FO
- U/G Fiber Optics Cable LOS C (S.U.E.*) — T FO
- U/G Fiber Optics Cable LOS D (S.U.E.*) — T FO

WATER:

- Water Manhole — W
- Water Meter
- Water Valve
- Water Hydrant
- U/G Water Line LOS B (S.U.E*) — W
- U/G Water Line LOS C (S.U.E*) — W
- U/G Water Line LOS D (S.U.E*) — W
- Above Ground Water Line — A/G Water

TV:

- TV Pedestal — C
- TV Tower
- U/G TV Cable Hand Hole — HH
- U/G TV Cable LOS B (S.U.E.*) — TV
- U/G TV Cable LOS C (S.U.E.*) — TV
- U/G TV Cable LOS D (S.U.E.*) — TV
- U/G Fiber Optic Cable LOS B (S.U.E.*) — TV FO
- U/G Fiber Optic Cable LOS C (S.U.E.*) — TV FO
- U/G Fiber Optic Cable LOS D (S.U.E.*) — TV FO

GAS:

- Gas Valve
- Gas Meter
- U/G Gas Line LOS B (S.U.E.*) — G
- U/G Gas Line LOS C (S.U.E.*) — G
- U/G Gas Line LOS D (S.U.E.*) — G
- Above Ground Gas Line — A/G Gas

SANITARY SEWER:

- Sanitary Sewer Manhole
- Sanitary Sewer Cleanout
- U/G Sanitary Sewer Line — SS
- Above Ground Sanitary Sewer — A/G Sanitary Sewer
- SS Forced Main Line LOS B (S.U.E.*) — FSS
- SS Forced Main Line LOS C (S.U.E.*) — FSS
- SS Forced Main Line LOS D (S.U.E.*) — FSS

MISCELLANEOUS:

- Utility Pole
- Utility Pole with Base
- Utility Located Object
- Utility Traffic Signal Box — S
- Utility Unknown U/G Line LOS B (S.U.E.*) — ?UTL
- U/G Tank; Water, Gas, Oil
- Underground Storage Tank, Approx. Loc. — UST
- A/G Tank; Water, Gas, Oil
- Geoenvironmental Boring
- U/G Test Hole LOS A (S.U.E.*)
- Abandoned According to Utility Records — AATUR
- End of Information — E.O.I.

DocuSign Envelope ID: EE42EDFB-2E85-4569-9D16-2B88AF5F33E8

PROJECT REFERENCE NO.	SHEET NO.
WBS # 17BP.3.R.43	1C-1
Location and Surveys	

SURVEY CONTROL SHEET 81-0013

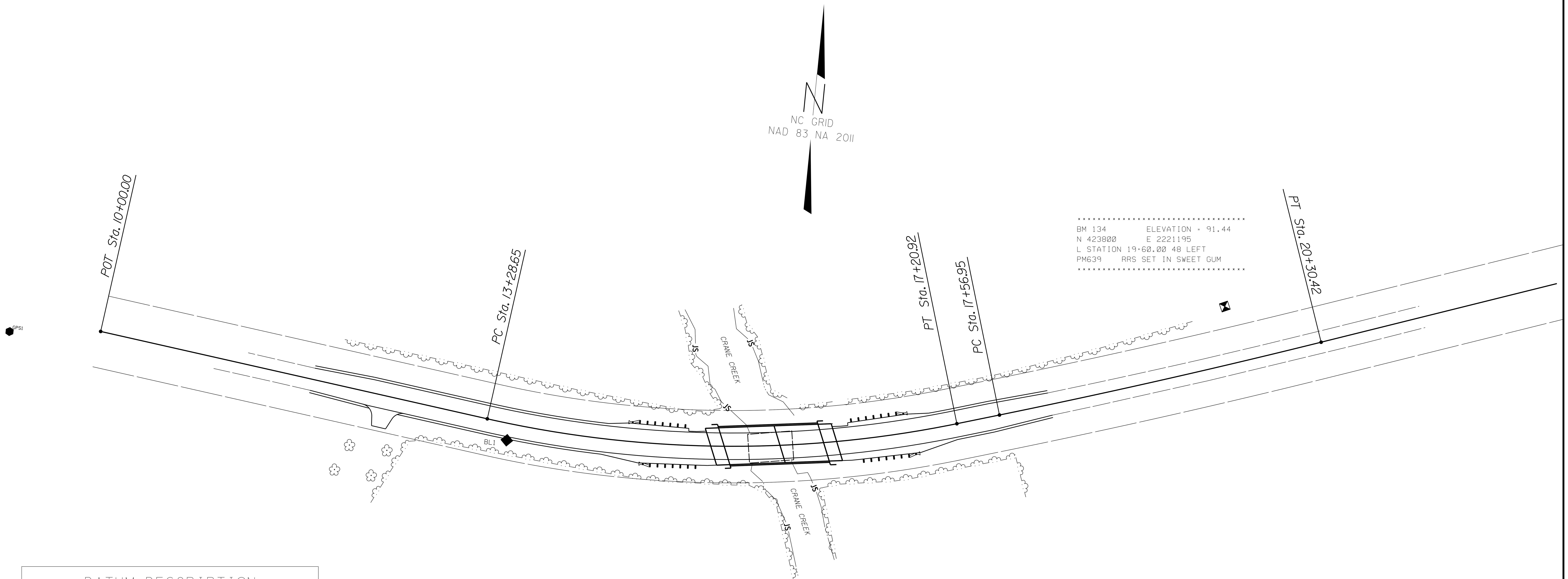

DATUM DESCRIPTION

THE LOCALIZED COORDINATE SYSTEM DEVELOPED FOR THIS PROJECT IS BASED ON THE STATE PLANE COORDINATES ESTABLISHED BY NCGS FOR MONUMENT "NCDOT"
WITH NAD 83/NSRS 2007 STATE PLANE GRID COORDINATES OF
NORTHING: 423708.548(ft) EASTING: 2219974.098(ft)
ELEVATION: 119.48(ft)
THE AVERAGE COMBINED GRID FACTOR USED ON THIS PROJECT (GROUND TO GRID) IS: 0.99988944
THE N.C. LAMBERT GRID BEARING AND LOCALIZED HORIZONTAL GROUND DISTANCE FROM "NCDOT" TO -L- L STATION 10+00.00 IS
S 85° 53' 20" E 296.19'
ALL LINEAR DIMENSIONS ARE LOCALIZED HORIZONTAL DISTANCES
VERTICAL DATUM USED IS NAVD 88

L

TYPE	STATION	NORTH	EAST
POT	10+00.00	423687.3140	2220269.5270
PC	13+28.65	423646.9182	2220595.6828
PT	17+20.92	423681.3626	2220983.5019
PC	17+56.95	423692.0230	2221017.9160
PT	20+30.42	423778.4336	2221277.3550
POT	29+22.77	424078.2310	2222117.8360

BL

POINT	DESC.	NORTH	EAST	ELEVATION	L STATION	OFFSET
GPS2	GPS CAP & REBAR	423843.7800	2218913.0520	136.04	OUTSIDE PROJECT LIMITS	
GPS1	GPS CAP & REBAR	423708.5480	2219974.0980	119.48	OUTSIDE PROJECT LIMITS	
BL1	TRV CAP & REBAR	423630.8220	2220613.4820	94.88	13+48.00	13.99 RT

ROW MARKER IRON PIN AND CAP-E

ALIGN	STATION	OFFSET	NORTH	EAST
L	11+80.00	30.00	423635.4168	2220444.4746
L	11+80.00	-30.00	423694.9618	2220451.8495
L	11+80.00	-45.00	423709.8480	2220453.6933
L	13+00.00	50.00	423600.8186	2220561.1064
L	13+28.65	-45.00	423691.5770	2220601.2140
L	13+28.65	50.00	423597.2973	2220589.5370
L	15+72.01	30.34	423618.8534	2220842.5559
L	15+76.31	50.00	423600.0299	2220849.7791
L	16+40.00	-45.00	423704.8073	2220895.7452
L	16+40.00	-29.76	423689.9148	2220898.9663

NOTE: DRAWING NOT TO SCALE

DocuSign Envelope ID: EE42EDFB-2E85-4569-9D16-2B88AF5F33E8

HNTB
HNTB NORTH CAROLINA, P.C.
343 E. Six Forks Road, Suite 200
Raleigh, North Carolina 27609
NC License No: C-1554

PROJECT REFERENCE NO.	SHEET NO.
17BP.3.R.43	2A–1

ROADWAY DESIGN ENGINEER

NORTH CAROLINA PROFESSIONAL SEAL 020107 ENGINEER DAVID W. BASS

DocuSigned by: David W. Bass 3/29/2016
FF0918

DOCUMENT NOT CONSIDERED FINAL UNLESS ALL SIGNATURES COMPLETED

PAVEMENT SCHEDULE

C1	PROP. APPROX. 3" ASPHALT CONCRETE SURFACE COURSE, TYPE SF9.5A, AT AN AVERAGE RATE OF 165 LBS. PER SQ. YARD IN EACH OF TWO LAYERS.
C2	PROP. VARIABLE DEPTH ASPHALT CONCRETE SURFACE COURSE, TYPE SF9.5A AT AN AVERAGE RATE OF 110 LBS. PER SQ. YARD PER INCH. DEPTH TO BE PLACED IN LAYERS NOT LESS THAN 1" IN DEPTH OR GREATER THAN 1.5" IN DEPTH .
E1	PROP. APPROX. 5" ASPHALT CONCRETE BASE COURSE, TYPE B25.0B, AT AN AVERAGE RATE OF 570 LBS. PER SQ. YARD.
E2	PROP. VARIABLE DEPTH ASPHALT CONCRETE BASE COURSE, TYPE B25.0B AT AN AVERAGE RATE OF 114 LBS. PER SQ. YARD PER INCH. DEPTH TO BE PLACED IN LAYERS NOT LESS THAN 3" IN DEPTH OR GREATER THAN 5.5" IN DEPTH .
R	SHOULDER BERM GUTTER
T	EARTH MATERIAL
U	EXISTING PAVEMENT

ALL PAVEMENT EDGE SLOPES ARE 1:1 UNLESS SHOWN OTHERWISE

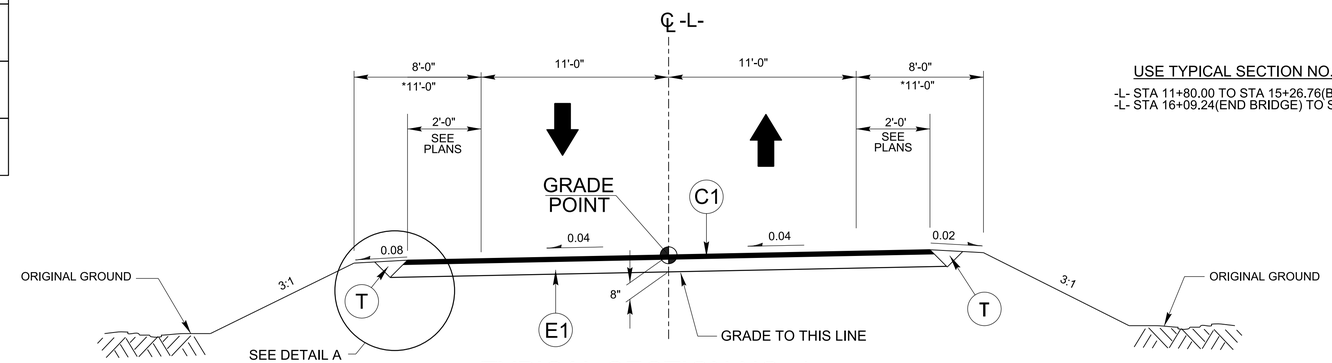

USE TYPICAL SECTION NO. 1 FROM:

-L- STA 11+80.00 TO STA 15+26.76(BEGIN BRIDGE)
-L- STA 16+09.24(END BRIDGE) TO STA 18+00.00

TYPICAL SECTION NO. 1

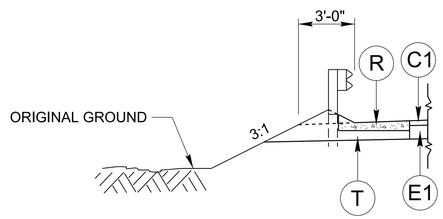

DETAIL A

SHOULDER BERM GUTTER LOCATIONS
-L- STA 14+96.87 TO STA 15+10.69 LT
-L- STA 16+16.92 TO STA 16+30.74 LT

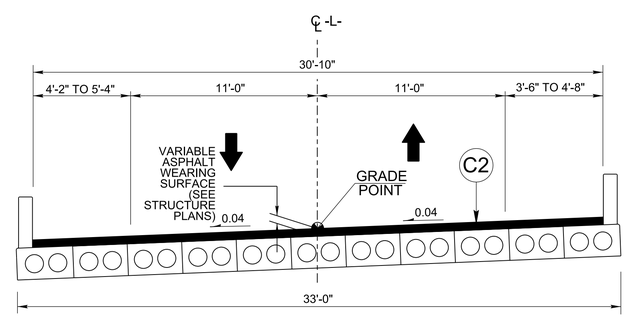

USE TYPICAL SECTION NO. 2 FROM:

-L- STA 15+26.76 TO STA 16+09.24

TYPICAL SECTION NO. 2

CORED SLAB BRIDGE OVERLAY

NOTES: * SHOULDER WIDTH INCREASED 3' WITH THE USE OF GUARDRAIL

6/2/99
29-MAR-2016 14:47
\\7-hntb.com\projects\58177 NCDOT Division On-Call\17BP.3.R.43.Sampson BR013\Roadway\Proj\810013_rdy_typ.dgn
$$$$USERNAME$$$$

DocuSign Envelope ID: EE42EDFB-2E85-4569-9D16-2B88AF5F33E8

$$$$$$SYSTIME$$$$$
$$$$$$$$$$$$$$$$$$DGN$$$$$$$$$$$$$$$$
$$$$USERNAME$$$$

STATE OF NORTH CAROLINA
DEPT. OF TRANSPORTATION
DIVISION OF HIGHWAYS
RALEIGH, N.C.

ENGLISH DETAIL DRAWING FOR
STRUCTURE ANCHOR UNITS
GUARDRAIL ANCHOR UNIT, TYPE III FOR ATTACHMENT TO
RAIL ON BRIDGE - SUB REGIONAL TIER

SHEET 2 OF 7
862d03

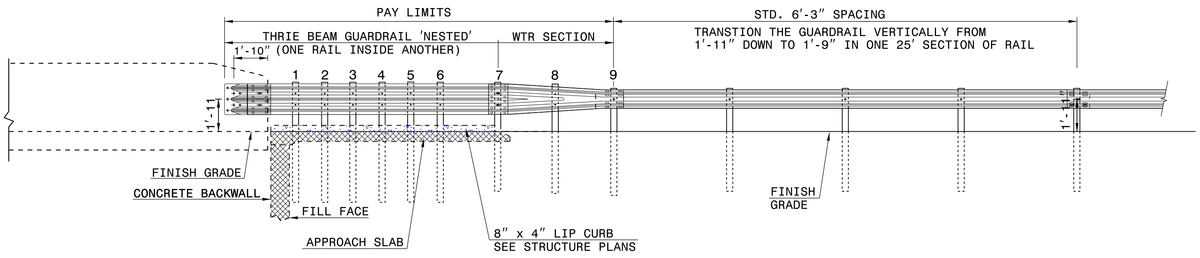

ELEVATION

NOTE:
- **POST NOT REQUIRED FOR SKEW ANGLES GREATER THAN 150° OR LESS THAN 30° UNLESS OTHERWISE DIRECTED BY THE ENGINEER.
- *THE DISTANCE FROM END OF BRIDGE RAIL TO CENTER LINE OF THE FIRST POST SHOULD BE 11½" IF CONCRETE BACKWALL IS NOT PRESENT.
- -SHOULDER BERM GUTTER MUST BE INSTALLED TO THE LIMITS 8" x 4" LIP CURB IS SHOWN IF ANCHOR UNIT IS NOT ADJACENT TO AN APPROACH SLAB.
- -MEASURE GUARDRAIL HEIGHT FROM THE TOP OF ADJACENT SURFACE (SHOULDER, BERM, OR GUTTER).
- -LAP JOINTS IN THE DIRECTION OF TRAFFIC FLOW.
- -SEE SHEET 5 FOR POST SECTIONS 1 THRU 9.

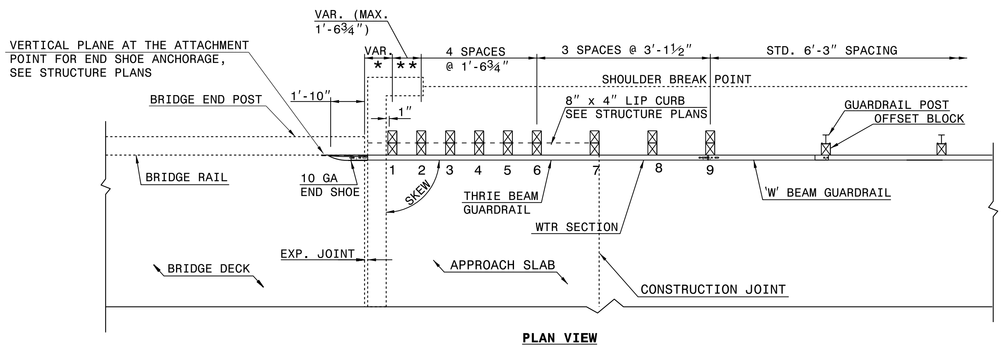

PLAN VIEW

GUARDRAIL ANCHOR UNIT, TYPE III FOR ATTACHMENT TO RAIL ON BRIDGE - SUB REGIONAL TIER

STATE OF NORTH CAROLINA
DEPT. OF TRANSPORTATION
DIVISION OF HIGHWAYS
RALEIGH, N.C.

ENGLISH DETAIL DRAWING FOR
STRUCTURE ANCHOR UNITS
GUARDRAIL ANCHOR UNIT, TYPE III FOR ATTACHMENT TO
RAIL ON BRIDGE - SUB REGIONAL TIER

SHEET 2 OF 7
862d03

STATE OF NORTH CAROLINA
DEPT. OF TRANSPORTATION
DIVISION OF HIGHWAYS
RALEIGH, N.C.

ENGLISH DETAIL DRAWING FOR
STRUCTURE ANCHOR UNITS
GUARDRAIL ANCHOR UNIT, TYPE III

SHEET 3 OF 7
862d03

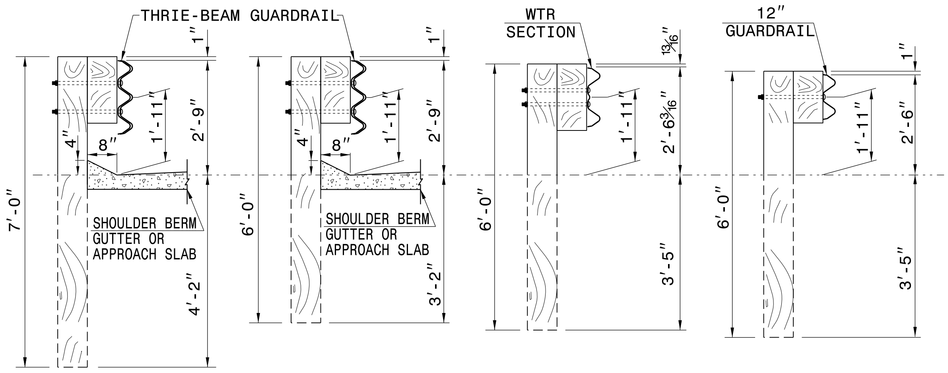

SECTION OF THRIE BEAM POSTS 1 THRU 6

SECTION OF THRIE BEAM POST 7

SECTION OF WTR BEAM POST 8

SECTION OF 'W' BEAM POST 9

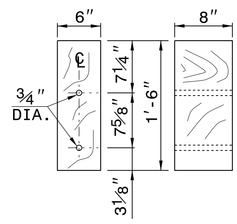

THRIE BEAM OFFSET BLOCK

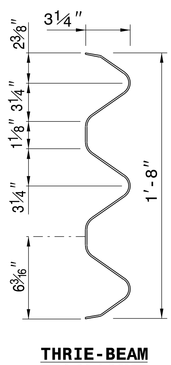

THRIE-BEAM SECTION

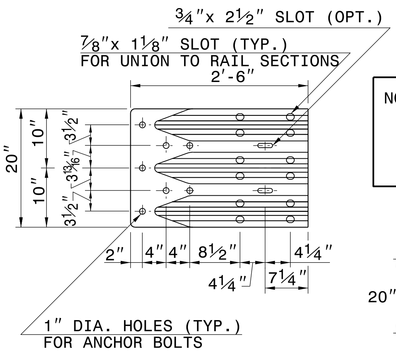

END SHOE

NOTE: THE MID POST AND OFFSET BLOCK OF THE WTR SECTION WILL REQUIRE SPECIAL BOLT HOLE DRILLING IN THE THRIE BEAM OFFSET BLOCK AND LINE POST.

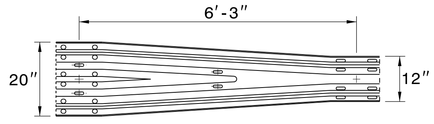

WTR SECTION
ELEVATION VIEW

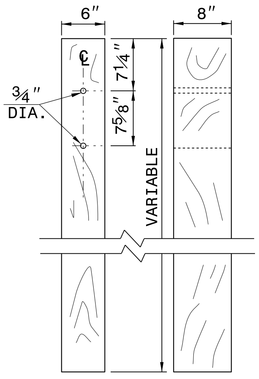

THRIE BEAM LINE POST

STATE OF NORTH CAROLINA
DEPT. OF TRANSPORTATION
DIVISION OF HIGHWAYS
RALEIGH, N.C.

ENGLISH DETAIL DRAWING FOR
STRUCTURE ANCHOR UNITS
GUARDRAIL ANCHOR UNIT, TYPE III

SHEET 3 OF 7
862d03

CONTRACT STANDARDS AND DEVELOPMENT UNIT
Office 919-707-6950 FAX 919-250-4119

SEE TITLE BLOCK

ORIGINAL BY: J. HOWERTON DATE: 06-22-12
MODIFIED BY: DATE:
CHECKED BY: DATE:
FILE SPEC.:

PROJECT REFERENCE NO. 17BP.3.R.45
SHEET NO. 2C-1

PROJECT REFERENCE NO.	SHEET NO.
17BP.3.R.45	2C-2

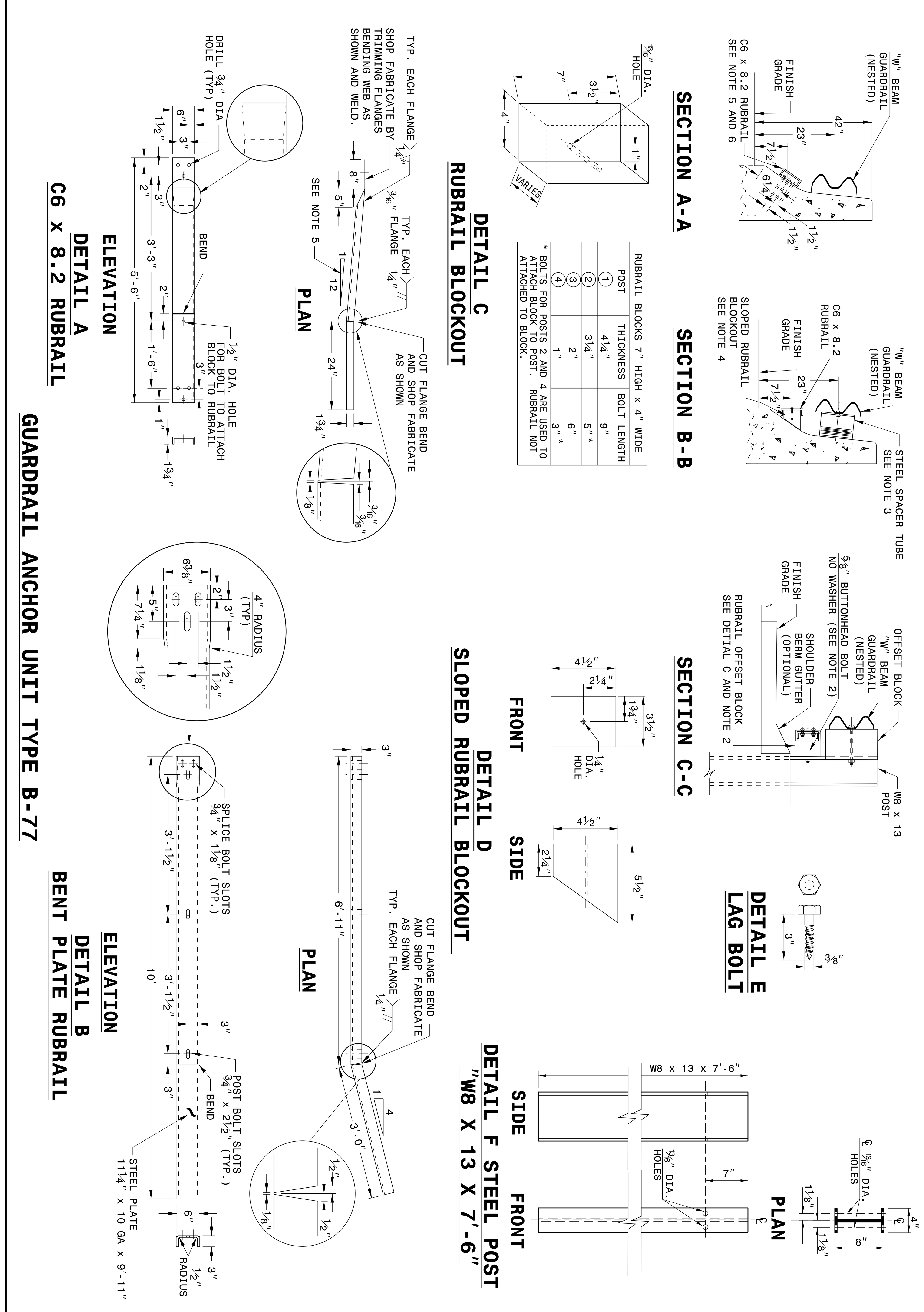

ENGLISH DETAIL DRAWING FOR
STRUCTURE ANCHOR UNIT
GUARDRAIL ANCHOR UNIT TYPE B-77
FOR F-SHAPE BARRIER

STATE OF
NORTH CAROLINA
DEPT. OF TRANSPORTATION
DIVISION OF HIGHWAYS
RALEIGH, N.C.

SHEET 5 OF 7
862D03

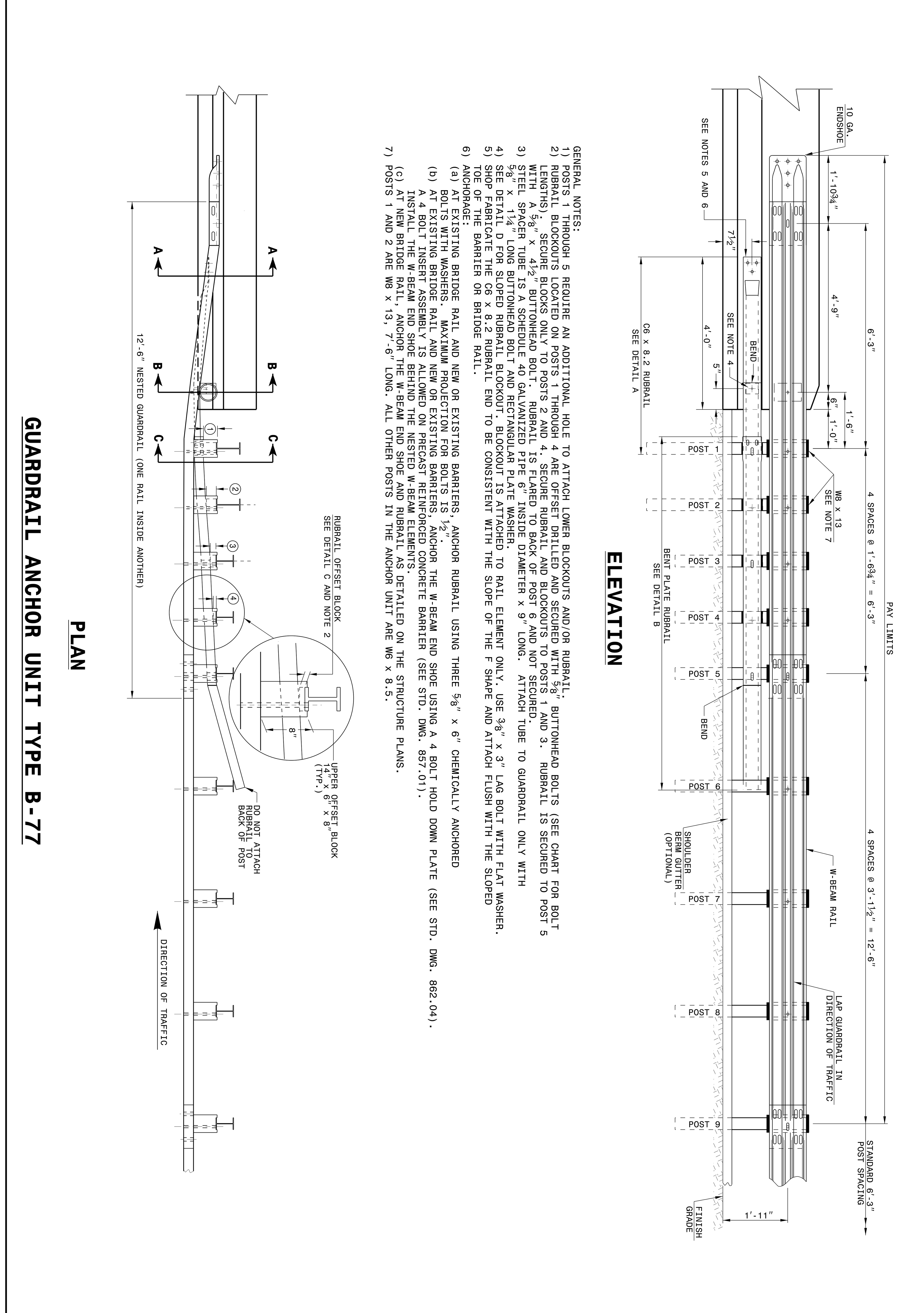

ENGLISH DETAIL DRAWING FOR
GUARDRAIL ANCHOR UNIT
GUARDRAIL ANCHOR UNIT TYPE B-77
FOR F-SHAPE BARRIER

STATE OF
NORTH CAROLINA
DEPT. OF TRANSPORTATION
DIVISION OF HIGHWAYS
RALEIGH, N.C.

SHEET 4 OF 7
862D03

CONTRACT STANDARDS AND DEVELOPMENT UNIT
Office 919-707-6950 FAX 919-250-4119

SEE TITLE BLOCK

ORIGINAL BY: J HOWERTON DATE: 06-22-12
MODIFIED BY: DATE:
CHECKED BY: DATE:
FILE SPEC.:

DocuSign Envelope ID: EE42EDFB-2E85-4569-9D16-2B88AF5F33E8

12/06/07

COMPUTED BY: MONICA J. DUVAL DATE: 11/06/15
CHECKED BY: DAVID W. BASS, PE DATE: 11/06/15

STATE OF NORTH CAROLINA
DIVISION OF HIGHWAYS

PROJECT REFERENCE NO.	SHEET NO.
17BP.3.R.43	3B–1

SUMMARY OF EARTHWORK

STATION	STATION	UNCL. EXCAV.	EMBANK. +%	BORROW	WASTE
–L– STA 11+80.00	–L– STA 15+26.76 (BRIDGE)	173	1371	1198	
–L– STA 16+09.24 (BRIDGE)	–L– STA 18+00.00	15	218	203	
SUBTOTALS:		188	1589	1401	
PROJECT TOTALS:		188	1589	1401	
5% TO REPLACE BORROW				70	
GRAND TOTALS:		188		1471	
SAY:		200		1500	

Note: Approximate quantities only. Unclassified Excavation, Borrow Excavation, Fine Grading, Clearing and Grubbing, and Removal of Existing Pavement will be paid for at the contract lump sum price for "Grading."

PAVEMENT REMOVAL SUMMARY

SURVEY LINE	STATION	STATION	LOCATION LT/RT/CL	YD^2
–L–	11+80.00	15+46.30	CL	772
	15+83.40	18+00.00	CL	455
			TOTAL:	1227
			SAY:	1230

SHOULDER BERM GUTTER SUMMARY

SURVEY LINE	STATION	STATION	LENGTH
–L–	14+96.69	15+10.69	14'
	16+16.92	16+30.92	14'
		TOTAL:	28'
		SAY:	30'

ROW AREA DATA SUMMARY

PARCEL NO.	PROPERTY OWNERS NAMES	PROPOSED R/W	TEMP. DRAIN. EASE.	TEMP. CONST. EASE.
1	MICHAEL L. BRUMMET	6812.30 S.F.		
2	CARL G. BASS	5557.97 S.F.		
3	MICHAEL D. BASS	1233.87 S.F.		621.00 S.F.

LIST OF PIPES, ENDWALLS, ETC. (FOR PIPES 48" & UNDER)

STATION (SIZE / THICKNESS OR GAUGE)	LOCATION (LT,RT, OR CL)	STRUCTURE NO. FROM	STRUCTURE NO. TO	TOP ELEVATION	INVERT ELEVATION	INVERT ELEVATION	SLOPE CRITICAL	DRAINAGE PIPE (RCP, CSP, CAAP, HDPE, or PVC) 12"	15"	18"	24"	30"	36"	42"	48"	C.S. PIPE (UNLESS NOTED OTHRWISE) 12" .064	15" .064	18" .064	24" .064	30" .079	36" .079	42" .109	48" .109	CLASS III R.C. PIPE (UNLESS OTHERWISE NOTED) 12"	15"	18"	24"	30"	36"	42"	48"
–L– 16+25.50	LT	0401		91.66																											
–L– 16+25.50		0401	OUT		88.16	86.80																			16						
TOTAL																									16						

STATION	15" SIDE DRAIN PIPE	18" SIDE DRAIN PIPE	24" SIDE DRAIN PIPE	ENDWALLS STD. 838.01, STD. 838.11 OR STD. 838.80 (UNLESS NOTED OTHERWISE) CU. YDS. R.C.P.	C.S.P.	QUANTITIES FOR DRAINAGE STRUCTURES * TOTAL L.F. FOR PAY QUANTITY SHALL BE COL. 'A' + (1.3 X COL.'B') PER EACH (0' THRU 5.0')	LIN. *FT. A 5.0' THRU 10.0'	LIN. *FT. B 10.0' AND ABOVE	C.B. STD. 840.01 OR STD. 840.02	FRAME, GRATES AND HOOD STANDARD 840.03 TYPE OF GRATE E	F	G		D.I. STD. 840.14 OR STD. 840.15	D.I. FRAME & GRATE STD. 840.16	G.D.I. TYPE "A" STD. 840.17 OR 840.26	G.D.I. TYPE "B" STD. 840.18 OR 840.27	G.D.I. TYPE "D" STD. 840.19 OR 840.28	G.D.I. FRAME WITH GRATE STD. 840.22	G.D.I. FRAME WITH TWO GRATES STD. 840.22	G.D.I. (N.S.) FRAME WITH GRATE STD. 840.24	G.D.I. (N.S.) FRAME WITH TWO GRATES STD. 840.24	J.B. STD. 840.31 OR 840.32	T.B.D.I. (N.S.) FRAME AND TWO GRATES STD. 840.29							CORR. STEEL ELBOWS NO. & SIZE	CONC. COLLARS CL. "B" C.Y. STD. 840.72	CONC. & BRICK PIPE PLUG, C.Y. STD. 840.71	PIPE REMOVAL LIN.FT.	REMARKS
						1											1							1											
–L– 16+25.50																																			
–L– 16+25.50																																			
TOTAL						1											1							1											

ABBREVIATIONS

- C.B. CATCH BASIN
- N.D.I. NARROW DROP INLET
- D.I. DROP INLET
- G.D.I. GRATED DROP INLET
- G.D.I. (N.S.) GRATED DROP INLET (NARROW SLOT)
- J.B. JUNCTION BOX
- M.H. MANHOLE
- T.B.D.I. TRAFFIC BEARING DROP INLET
- T.B.J.B. TRAFFIC BEARING JUNCTION BOX

"N" = DISTANCE FROM EDGE OF LANE TO FACE OF GUARDRAIL.
TOTAL SHOULDER WIDTH = DISTANCE FROM EDGE OF TRAVEL LANE TO SHOULDER BREAK POINT.
FLARE LENGTH = DISTANCE FROM LAST SECTION OF PARALLEL GUARDRAIL TO END OF GUARDRAIL.
W = TOTAL WIDTH OF FLARE FROM BEGINNING OF TAPER TO END OF GUARDRAIL.
G = GATING IMPACT ATTENUATOR TYPE 350
NG = NON-GATING IMPACT ATTENUATOR TYPE 350

GUARDRAIL SUMMARY

SURVEY LINE	BEG. STA.	END STA.	LOCATION	LENGTH STRAIGHT	LENGTH SHOP CURVED	LENGTH DOUBLE FACED	WARRANT POINT APPROACH END	WARRANT POINT TRAILING END	"N" DIST. FROM E.O.L.	TOTAL SHOUL. WIDTH	FLARE LENGTH APPROACH END	FLARE LENGTH TRAILING END	W APPROACH END	W TRAILING END	ANCHORS XI MOD	TYPE III	GRAU 350	M-350	XIII	CAT-1	VI MOD	BIC	AT-1	IMPACT ATTENUATOR TYPE 350 EA	G	NG	SINGLE FACED GUARDRAIL	REMOVE EXISTING GUARDRAIL	REMOVE AND STOCKPILE EXISTING GUARDRAIL	REMARKS
–L–	14+46.87	15+21.87 (BRIDGE)	LT	75'				15+21.87 (BRIDGE)	3.08'	11'		50'		1'		1	1													
	14+56.50	15+31.50 (BRIDGE)	RT	75'			15+31.50 (BRIDGE)		5.13'	11'	50'		1'			1	1													
	16+05.74 (BRIDGE)	16+80.74	LT	75'			16+05.74 (BRIDGE)		3.58'	11'	50'		1'			1	1													
	16+12.62 (BRIDGE)	16+87.62	RT	75'				16+12.62 (BRIDGE)	5.68'	11'		50'		1'		1	1													
			SUBTOTAL:	300'																										
			ANCHOR DEDUCTIONS:																											
			GRAU 350: 4@50'	–200'																										
			TYPE III:4@18.75'	–75'																										
			TOTAL:	25'												4	4													
			SAY:	37.5'																										
			5 ADDITIONAL POST																											

29-MAR-2016 14:47
\\ralw00\projects\58177 NCDOT Division On-Call\17BP.3.R.43_Sampson BR013\Roadway\Proj\810013_rdy_sum.dgn
$$$$USERNAME$$$$

DocuSign Envelope ID: C2904EB5-536F-4EBA-B6FD-E1F1EBFC4F6D

HNTB
HNTB NORTH CAROLINA, P.C.
343 E. Six Forks Road, Suite 200
Raleigh, North Carolina 27609
NC License No: C-1554

PROJECT REFERENCE NO.	SHEET NO.
17BP.3.R.43	4
R/W SHEET NO.	

ROADWAY DESIGN ENGINEER — NORTH CAROLINA PROFESSIONAL SEAL 020107 — DAVID W. BASS — 4/11/2016

HYDRAULICS ENGINEER — NORTH CAROLINA PROFESSIONAL SEAL 039760 — JOHN E. WATSON — 4/11/2016

DOCUMENT NOT CONSIDERED FINAL UNLESS ALL SIGNATURES COMPLETED

REVISIONS

8/17/99

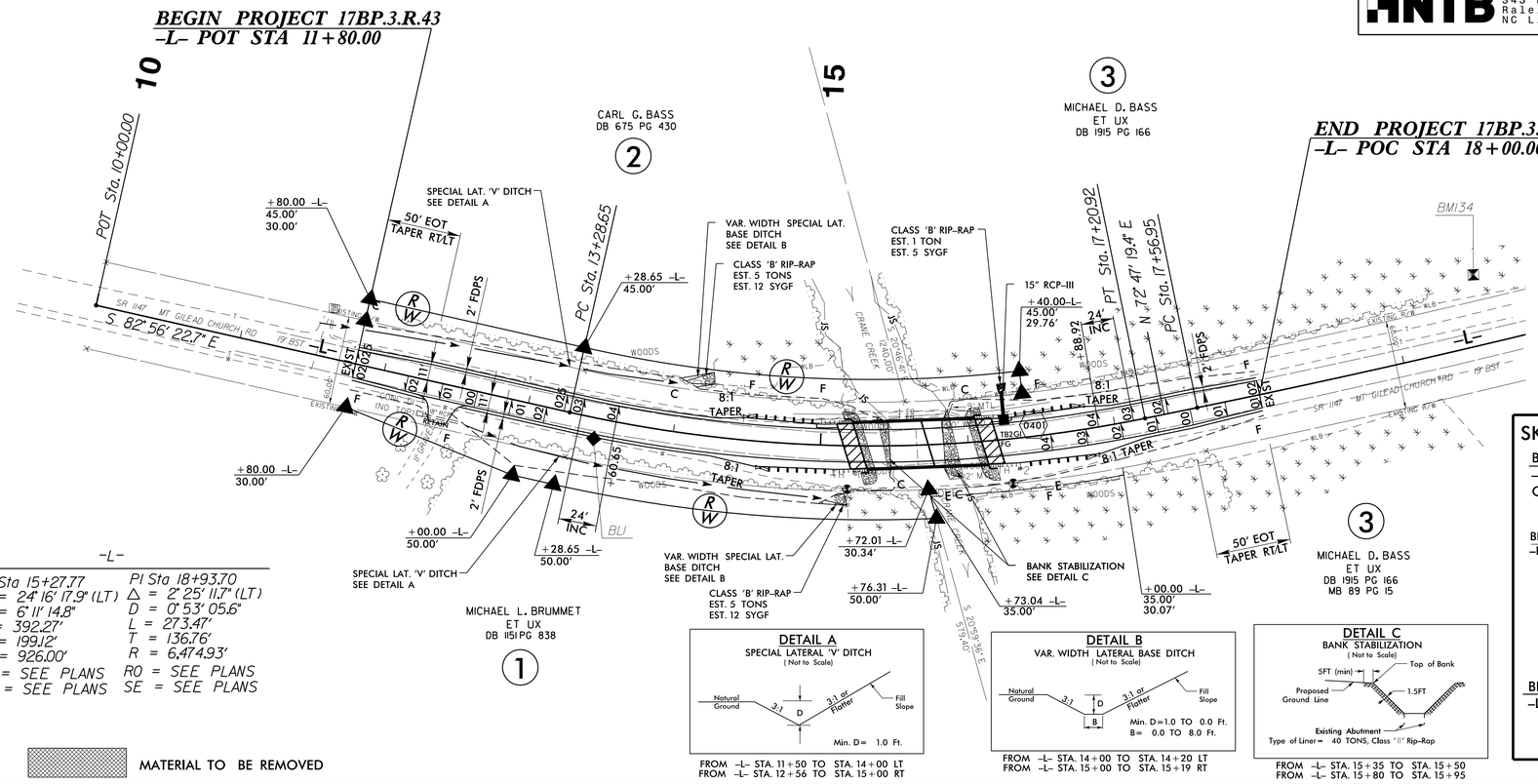

-L-	
PI Sta 15+27.77	PI Sta 18+93.70
Δ = 24° 16' 17.9" (LT)	Δ = 2° 25' 11.7" (LT)
D = 6° 11' 14.8"	D = 0° 53' 05.6"
L = 392.27'	L = 273.47'
T = 199.12'	T = 136.76'
R = 926.00'	R = 6,474.93'
RO = SEE PLANS	RO = SEE PLANS
SE = SEE PLANS	SE = SEE PLANS

MATERIAL TO BE REMOVED

DETAIL A
SPECIAL LATERAL 'V' DITCH
(Not to Scale)

FROM -L- STA. 11+50 TO STA. 14+00 LT
FROM -L- STA. 12+56 TO STA. 15+00 RT

DETAIL B
VAR. WIDTH LATERAL BASE DITCH
(Not to Scale)

FROM -L- STA. 14+00 TO STA. 14+20 LT
FROM -L- STA. 15+00 TO STA. 15+19 RT

DETAIL C
BANK STABILIZATION
(Not to Scale)

FROM -L- STA. 15+35 TO STA. 15+50
FROM -L- STA. 15+80 TO STA. 15+95

SKETCH OF BRIDGE IN RELATIONSHIP TO PAVEMENT
NTS

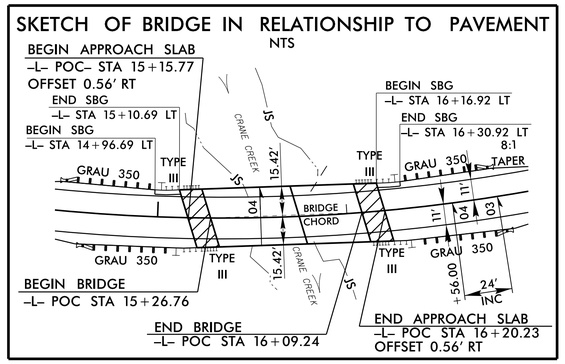

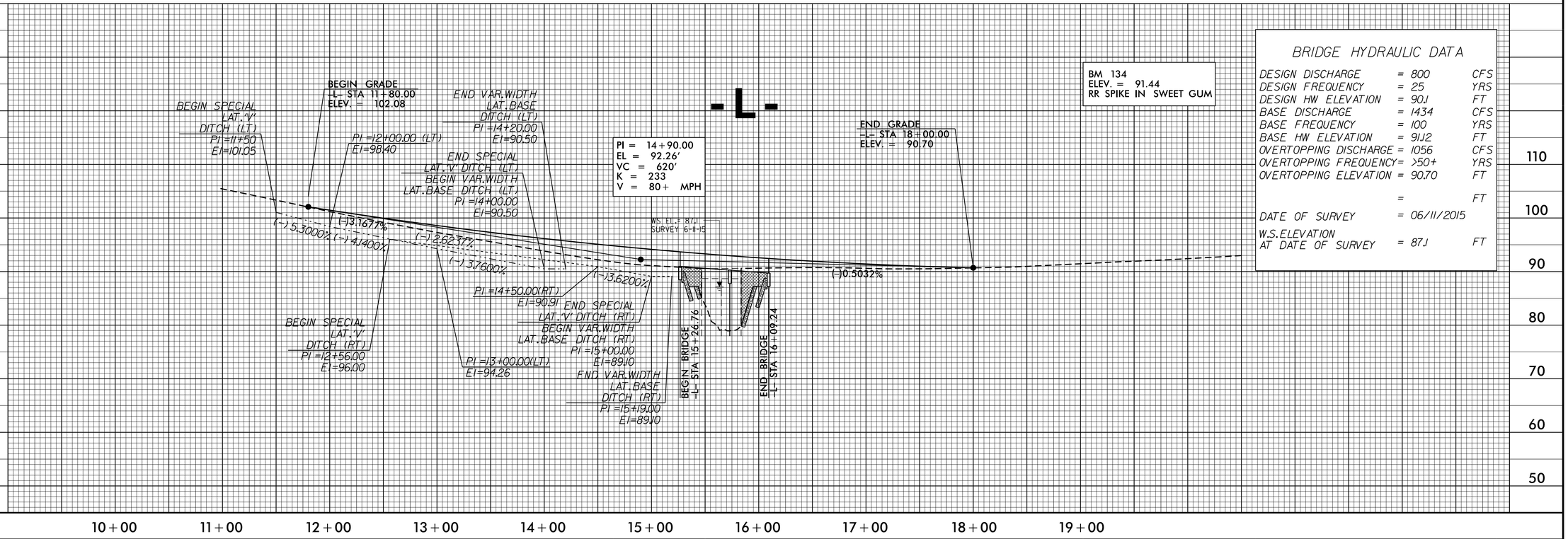

BRIDGE HYDRAULIC DATA

DESIGN DISCHARGE	= 800	CFS
DESIGN FREQUENCY	= 25	YRS
DESIGN HW ELEVATION	= 90.1	FT
BASE DISCHARGE	= 1434	CFS
BASE FREQUENCY	= 100	YRS
BASE HW ELEVATION	= 91.12	FT
OVERTOPPING DISCHARGE	= 1056	CFS
OVERTOPPING FREQUENCY	= >50+	YRS
OVERTOPPING ELEVATION	= 90.70	FT
	=	FT
DATE OF SURVEY	= 06/11/2015	
W.S. ELEVATION AT DATE OF SURVEY	= 87.1	FT

I:\APR-2016 11:35
\\nt\DOT\Projects\58177 NCDOT Division On-Call\17BP.3.R.43.Sampson BR013\Roadway\Proj\810013.rdy.pshl.dgn
$$$$USERNAME$$$$

DocuSign Envelope ID: 73DA2F29-EB74-4E16-A28D-86D216490C88

STATE OF NORTH CAROLINA
DIVISION OF HIGHWAYS

TRANSPORTATION MANAGEMENT PLAN

SAMPSON COUNTY

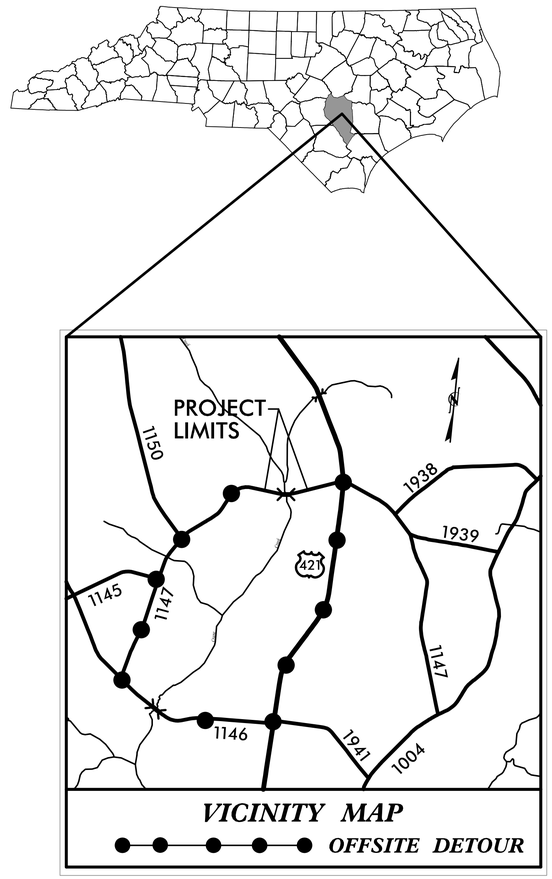

LOCATION: REPLACE BRIDGE NO. 13 OVER CRANE CREEK ON SR 1141 (MT. GILEAD CHURCH ROAD)

INDEX OF SHEETS

SHEET NO.	TITLE
TMP-1	TITLE SHEET, VICINITY, INDEX OF SHEETS AND LIST OF APPLICABLE ROADWAY STANDARD DRAWINGS
TMP-2	TEMPORARY TRAFFIC CONTROL PHASING AND GENERAL NOTES
TMP-3	DETOUR SIGN LEGEND AND DETOUR DETAILS

ROADWAY STANDARD DRAWINGS

THE FOLLOWING ROADWAY STANDARDS AS SHOWN IN "ROADWAY STANDARD DRAWINGS" PROJECT SERVICES UNIT - N.C. DEPARTMENT OF TRANSPORTATION - RALEIGH, N.C. DATED JAN 2012 ARE APPLICABLE TO THIS PROJECT AND BY REFERENCE HEREBY ARE CONSIDERED A PART OF THESE PLANS:

STD. NO.	TITLE
1101.01	WORK ZONE ADVANCE WARNING SIGNS
1101.03	TEMPORARY ROAD CLOSURES
1101.11	TRAFFIC CONTROL DESIGN TABLES
1110.01	STATIONARY WORK ZONE SIGNS
1145.01	BARRICADES
1205.01	PAVEMENT MARKINGS - LINE TYPES & OFFSETS
1205.01	PAVEMENT MARKINGS - 2 LANE & MULTILANE ROADWAYS
1205.12	PAVEMENT MARKINGS - BRIDGES
1250.01	RAISED PAVEMENT MARKERS - INSTALLATION SPACING
1251.02	RAISED PAVEMENT MARKERS - PERMANENT AND TEMPORARY
1261.01	GUARDRAIL AND BARRIER DELINEATOR SPACING
1261.02	GUARDRAIL AND BARRIER DELINEATOR TYPE
1262.01	GUARDRAIL END DELINEATION

HNTB

HNTB NORTH CAROLINA, P.C.
343 E. Six Forks Road, Suite 200
Raleigh, North Carolina 27609
NC License No: C-1554

R. B. EARLY, PE — *TRAFFIC CONTROL PROJECT ENGINEER*

R. B. EARLY, PE — *TRAFFIC CONTROL PROJECT DESIGN ENGINEER*

J. A. PHILLIPS — *TRAFFIC CONTROL DESIGN ENGINEER*

WORK ZONE SAFETY & MOBILITY
"from the MOUNTAINS to the COAST"

N.C.D.O.T. WORK ZONE TRAFFIC CONTROL
1561 MAIL SERVICE CENTER (MSC) RALEIGH, NC 27699-1561
750 N. GREENFIELD PARKWAY, GARNER, NC 27529 (DELIVERY)
PHONE: (919) 773-2800 FAX: (919) 771-2745

KATHERINE HITE, PE — *DIVISION TRAFFIC ENGINEER*

DIVISION OF HIGHWAYS · STATE OF NORTH CAROLINA · DEPARTMENT OF TRANSPORTATION · WORK ZONE TRAFFIC CONTROL

DOCUMENT NOT CONSIDERED FINAL UNLESS ALL SIGNATURES COMPLETED

APPROVED: Docusigned by: Rhonda B. Early
DATE: 3/29/2016 F34CAF5AC68F48A...

SEAL

NORTH CAROLINA PROFESSIONAL SEAL 023521 ENGINEER RHONDA B. EARLY

SHEET NO.
TMP-1

17BP.3.R.43

TIP PROJECT:

1:53:09 PM
...\BR03_te_01_title.dgn
$$$$USERNAME$$$$

DocuSign Envelope ID: 73DA2F29-EB74-4E16-A28D-86D216490C88

PROJ. REFERENCE NO.	SHEET NO.
17BP.3.R.43	TMP-2

GENERAL NOTES

CHANGES MAY BE REQUIRED WHEN PHYSICAL DIMENSIONS IN THE DETAIL DRAWINGS, STANDARD DETAILS AND ROADWAY DETAILS ARE NOT ATTAINABLE TO MEET FIELD CONDITIONS OR RESULT IN THE DUPLICATE OR UNDESIRED OVERLAPPING OF DEVICES. MODIFICATIONS MAY INCLUDE: MOVING, SUPPLEMENTING, COVERING, OR REMOVAL OF DEVICES AS DIRECTED BY THE ENGINEER.

THE FOLLOWING GENERAL NOTES APPLY AT ALL THE TIMES FOR THE DURATION OF THE CONSTRUCTION PROJECT EXCEPT WHEN OTHERWISE NOTED IN THE PLAN OR DIRECTED BY THE ENGINEER.

LANE AND SHOULDER CLOSURE REQUIREMENTS

A) REMOVE LANE CLOSURE DEVICES FROM THE LANE WHEN WORK IS NOT BEING PERFORMED BEHIND THE LANE CLOSURE OR WHEN A LANE CLOSURE IS NO LONGER NEEDED OR AS DIRECTED BY THE ENGINEER.

TRAFFIC PATTERN ALTERATIONS

B) NOTIFY THE ENGINEER TWENTY ONE (21) CALENDAR DAYS PRIOR TO ANY TRAFFIC PATTERN ALTERATION.

SIGNING

C) PROVIDE SIGNING AND DEVICES REQUIRED TO CLOSE THE ROAD ACCORDING TO THE ROADWAY STANDARD DRAWINGS AND TRAFFIC CONTROL PLANS.

PROVIDE SIGNING REQUIRED FOR THE OFF-SITE DETOUR ROUTE AS SHOWN ON THIS SHEET.

D) COVER OR REMOVE ALL SIGNS AND DEVICES REQUIRED TO CLOSE THE ROAD WHEN ROAD CLOSURE IS NOT IN OPERATION.

COVER OR REMOVE ALL SIGNS REQUIRED FOR THE OFF-SITE DETOUR WHEN THE DETOUR IS NOT IN OPERATION.

E) ENSURE ALL NECESSARY SIGNING IS IN PLACE PRIOR TO ALTERING ANY TRAFFIC PATTERN.

TRAFFIC CONTROL DEVICES

F) PLACE TYPE III BARRICADES, WITH "ROAD CLOSED" SIGN R11-2 ATTACHED, OF SUFFICIENT LENGTH TO CLOSE ENTIRE ROADWAY.

PAVEMENT MARKING AND MARKERS

G) INSTALL PAVEMENT MARKINGS ON THE FINAL SURFACE AS FOLLOWS:

ROAD NAME	MARKING	MARKERS
SR 1147 (MT GILEAD CHURCH RD)	PAINT	RAISED

H) TIE PROPOSED PAVEMENT MARKING LINES TO EXISTING PAVEMENT MARKING LINES.

I) REMOVE/REPLACE ANY CONFLICTING/DAMAGED PAVEMENT MARKINGS.

J) PASSING ZONE WILL BE DETERMINED IN THE FIELD AND MUST BE APPROVED BY THE ENGINEER.

PHASING

PHASE I

PRIOR TO ANY CONSTRUCTION OPERATIONS, PLACE AND COVER OFF-SITE DETOUR SIGNS AS SHOWN ON TMP-3 AND IN ACCORDANCE WITH RSD 1101.03 (SHEET 1 OF 9).

PHASE II

USING OFF-SITE, UNCOVER DETOUR SIGNS, CLOSE -L- (SR 1147 / MT GILEAD CHURCH RD) TO TRAFFIC AND CONSTRUCT BRIDGE, APPROACHES AND ROADWAY UP TO AND INCLUDING THE FINAL LAYER OF SURFACE COURSE.

PHASE III

UPON COMPLETION OF BRIDGE, APPROACHES AND ROADWAY, PLACE FINAL PAVEMENT MARKINGS AND MARKERS IN ACCORDANCE WITH RSD 1205.01, 1205.02, 1205.12, 1250.01 AND 1251.01. REMOVE BARRICADES AND DETOUR SIGNS AND OPEN -L- (SR 1147 / MT GILEAD CHURCH RD.) TO TRAFFIC.

HNTB
HNTB NORTH CAROLINA, P.C.
343 E. Six Forks Road, Suite 200
Raleigh, North Carolina 27609
NC License No: C-1554

DOCUMENT NOT CONSIDERED FINAL UNLESS ALL SIGNATURES COMPLETED

APPROVED: DocuSigned by: Rhonda B. Early F34CAF5ACEB0...

DATE: 3/29/2016

NORTH CAROLINA PROFESSIONAL SEAL 023521 ENGINEER RHONDA B. EARLY SEAL

DIVISION OF HIGHWAYS STATE OF NORTH CAROLINA DEPARTMENT OF TRANSPORTATION WORK ZONE TRAFFIC CONTROL

GENERAL NOTES AND PHASING

1:53:17 PM
...\BR013_te_phasing.dgn
$$$$USERNAME$$$$

DocuSign Envelope ID: 73DA2F29-EB74-4E16-A28D-86D216490C88

PROJ. REFERENCE NO.	SHEET NO.
17BP.3.R.43	TMP-3

Ⓐ R11-2
48″ x 30″

TYPE III BARRICADE

Ⓑ R11-4
60″ x 30″

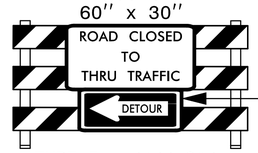

M4-10L
48″ x 18″

TYPE III BARRICADE

Ⓒ R11-3
60″ x 30″

M4-10R
48″ x 18″

TYPE III BARRICADE

Ⓓ R11-3
60″ x 30″

TYPE III BARRICADE

① DETOUR M4-8 24″ X 12″

M6-1 21″ X 15″

② DETOUR M4-8 24″ X 12″

M6-1 L 21″ X 15″

③ END DETOUR M4-8 A 24″ X 18″

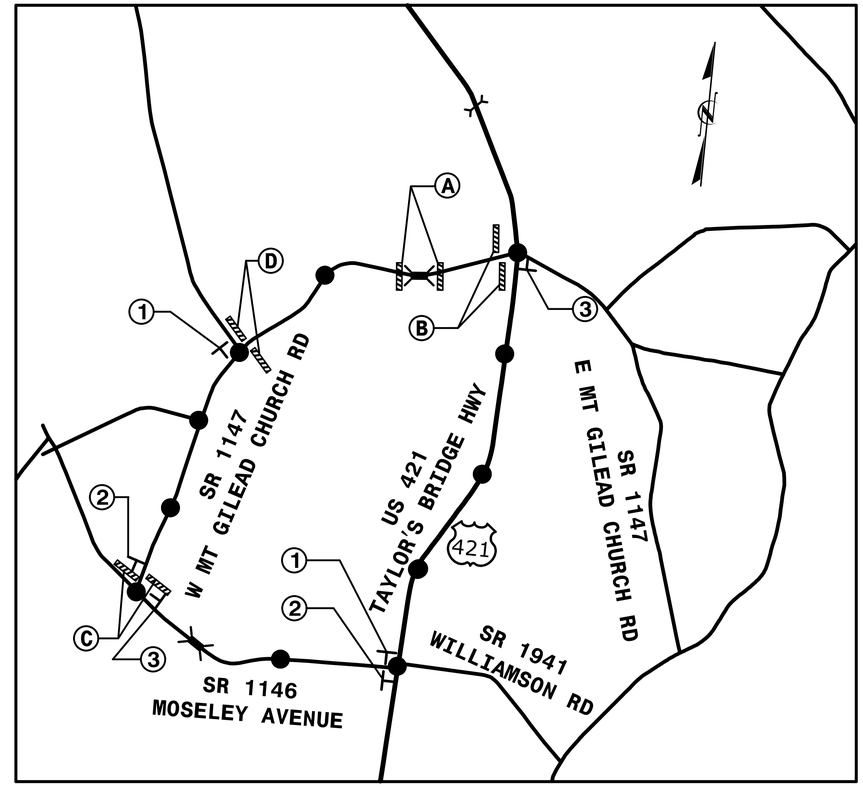

REFER TO ROADWAY STANDARD DRAWING NO. 1101.03
SHEET 1 OF 9 FOR ADVANCED WARNING SIGNS.

HNTB
HNTB NORTH CAROLINA, P.C.
343 E. Six Forks Road, Suite 200
Raleigh, North Carolina 27609
NC License No: C-1554

DOCUMENT NOT CONSIDERED FINAL
UNLESS ALL SIGNATURES COMPLETED

APPROVED: DocuSigned by: Rhonda B
F34CAF5AC6B6

DATE: 3/29/2016

NORTH CAROLINA PROFESSIONAL SEAL 023521 ENGINEER RHONDA B. EARLY
SEAL

DIVISION OF HIGHWAYS
STATE OF NORTH CAROLINA
DEPARTMENT OF TRANSPORTATION
WORK ZONE TRAFFIC CONTROL

DETOUR DETAIL

1:53:26 PM
...\BR013_TE_detour.dgn
$$$$USERNAME$$$$

TIP PROJECT: 17BP.3.R.43

STATE	STATE PROJECT REFERENCE NO.	SHEET NO.	TOTAL SHEETS
N.C.	17BP.3.R.43	EC-1	6

STATE PROJ. NO.	F.A. PROJ. NO.	DESCRIPTION

STATE OF NORTH CAROLINA
DIVISION OF HIGHWAYS

PLAN FOR PROPOSED
HIGHWAY EROSION CONTROL

LOCATION: REPLACE BRIDGE NO. 13 OVER CRANE CREEK ON SR 1147 (MT. GILEAD CHURCH ROAD)

TYPE OF WORK: GRADING, DRAINAGE, PAVING, AND STRUCTURES

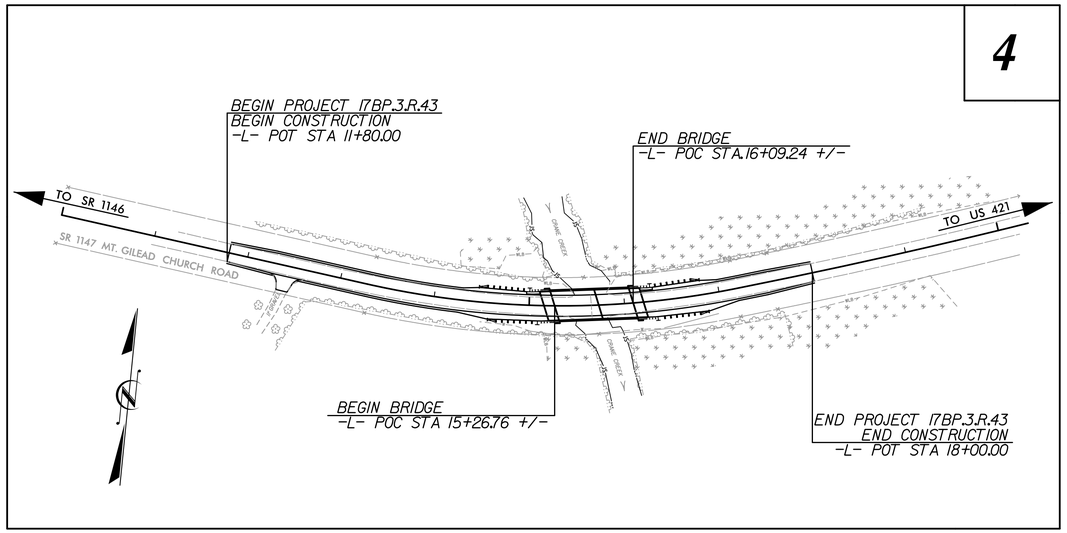

EROSION AND SEDIMENT CONTROL MEASURES

Std. #	Description	Symbol
1630.03	Temporary Silt Ditch	TSD
1630.05	Temporary Diversion	TD
1605.01	Temporary Silt Fence	
1606.01	Special Sediment Control Fence	
1622.01	Temporary Berms and Slope Drains	
	Silt Basin Type B	
1633.01	Temporary Rock Silt Check Type-A	
	Temporary Rock Silt Check Type-A with Matting and Polyacrylamide (PAM)	
	Temporary Rock Silt Check Type-B	
	Wattle / Coir Fiber Wattle	
	Wattle / Coir Fiber Wattle with Polyacrylamide (PAM)	
1634.01	Temporary Rock Sediment Dam Type-A	
1634.02	Temporary Rock Sediment Dam Type-B	
1635.01	Rock Pipe Inlet Sediment Trap Type-A	
1635.02	Rock Pipe Inlet Sediment Trap Type-B	
1630.04	Stilling Basin	
1630.06	Special Stilling Basin	
	Rock Inlet Sediment Trap:	
1632.01	Type A	A
1632.02	Type B	B
1632.03	Type C	C
	Skimmer Basin	
	Tiered Skimmer Basin	
	Infiltration Basin	

GRAPHIC SCALES

50 25 0 50 100
PLANS

50 25 0 50 100
PROFILE (HORIZONTAL)

10 5 0 10 20
PROFILE (VERTICAL)

ROADSIDE ENVIRONMENTAL UNIT
DIVISION OF HIGHWAYS
STATE OF NORTH CAROLINA

THESE EROSION AND SEDIMENT CONTROL PLANS COMPLY WITH THE REGULATIONS SET FORTH BY THE NCG-010000 GENERAL CONSTRUCTION PERMIT EFFECTIVE AUGUST 3, 2011 ISSUED BY THE NORTH CAROLINA DEPARTMENT OF ENVIRONMENT AND NATURAL RESOURCES DIVISION OF WATER QUALITY.

Prepared In the Office of:

HNTB
HNTB NORTH CAROLINA, P.C.
343 E. Six Forks Road, Suite 200
Raleigh, North Carolina 27609
NC License No: C-1554

2012 STANDARD SPECIFICATIONS

ALLEN T. HODGES, EI
EROSION CONTROL
LEVEL III
CERTIFICATION #3633

Roadway Standard Drawings

The following roadway english standards as appear in "Roadway Standard Drawings"– Roadway Design Unit – N. C. Department of Transportation – Raleigh, N. C., dated January 2012 and the latest revison thereto are applicable to this project and by reference hereby are considered a part of these plans.

1604.01	Railroad Erosion Control Detail	1632.01	Rock Inlet Sediment Trap Type A
1605.01	Temporary Silt Fence	1632.02	Rock Inlet Sediment Trap Type B
1606.01	Special Sediment Control Fence	1632.03	Rock Inlet Sediment Trap Type C
1607.01	Gravel Construction Entrance	1633.01	Temporary Rock Silt Check Type A
1622.01	Temporary Berms and Slope Drains	1633.02	Temporary Rock Silt Check Type B
1630.01	Riser Basin	1634.01	Temporary Rock Sediment Dam Type A
1630.02	Silt Basin Type B	1634.02	Temporary Rock Sediment Dam Type B
1630.03	Temporary Silt Ditch	1635.01	Rock Pipe Inlet Sediment Trap Type A
1630.04	Stilling Basin	1635.02	Rock Pipe Inlet Sediment Trap Type B
1630.05	Temporary Diversion	1640.01	Coir Fiber Baffle
1630.06	Special Stilling Basin	1645.01	Temporary Stream Crossing
1631.01	Matting Installation		

10:20:32 PM
$$$$USERNAME$$$$ 17BP.3.R.43_ec_tsh.dgn

PROJECT REFERENCE NO.	SHEET NO.
17BP.3.R.43	EC-2
R/W SHEET NO.	

SILT FENCE COIR FIBER WATTLE BREAK DETAIL

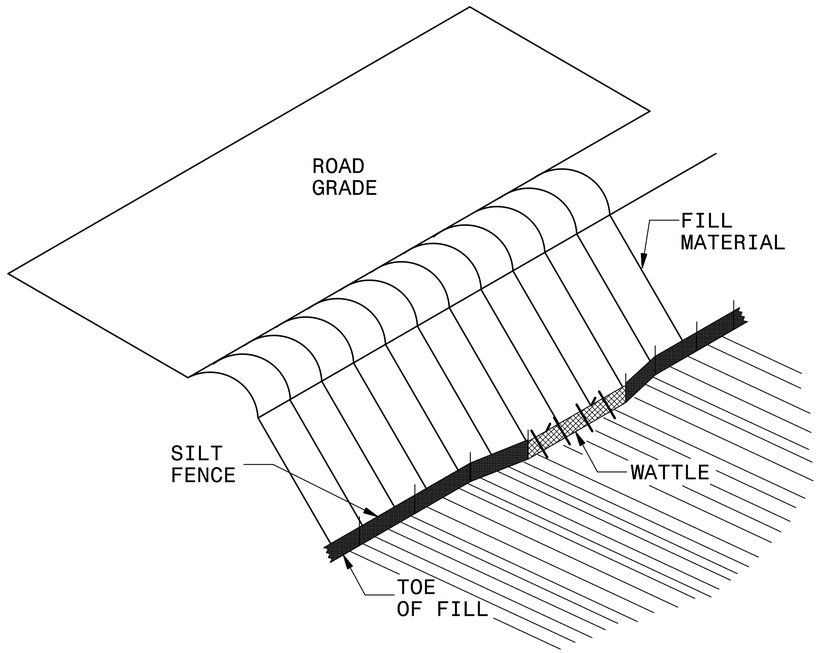

ISOMETRIC VIEW

NOTES:

USE MINIMUM 12 IN. DIAMETER COIR FIBER (COCONUT FIBER) WATTLE AND LENGTH OF 10 FT.

EXCAVATE A 1 TO 2 INCH TRENCH FOR WATTLE TO BE PLACED.

DO NOT PLACE WATTLE ON TOE OF SLOPE.

USE 2 FT. WOODEN STAKES WITH A 2 IN. BY 2 IN. NOMINAL CROSS SECTION.

INSTALL A MINIMUM OF 2 UPSLOPE STAKES AND 4 DOWNSLOPE STAKES AT AN ANGLE TO WEDGE WATTLE TO GROUND.

PROVIDE STAPLES MADE OF 0.125 IN. DIAMETER STEEL WIRE FORMED INTO A U SHAPE NOT LESS THAN 12″ IN LENGTH.

INSTALL STAPLES APPROXIMATELY EVERY 1 LINEAR FOOT ON BOTH SIDES OF WATTLE AND AT EACH END TO SECURE IT TO THE SOIL.

WATTLE INSTALLATION CAN BE ON OUTSIDE OF THE SILT FENCE AS DIRECTED.

INSTALL TEMPORARY SILT FENCE IN ACCORDANCE WITH SECTION 1605 OF THE STANDARD SPECIFICATIONS.

INSET A

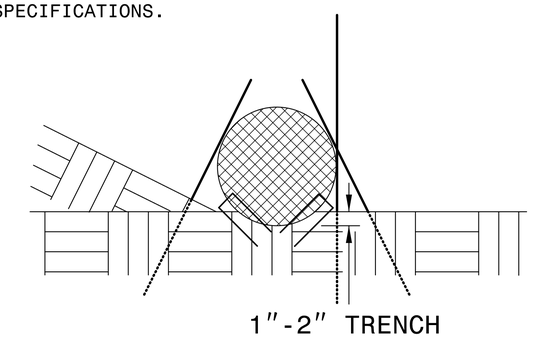

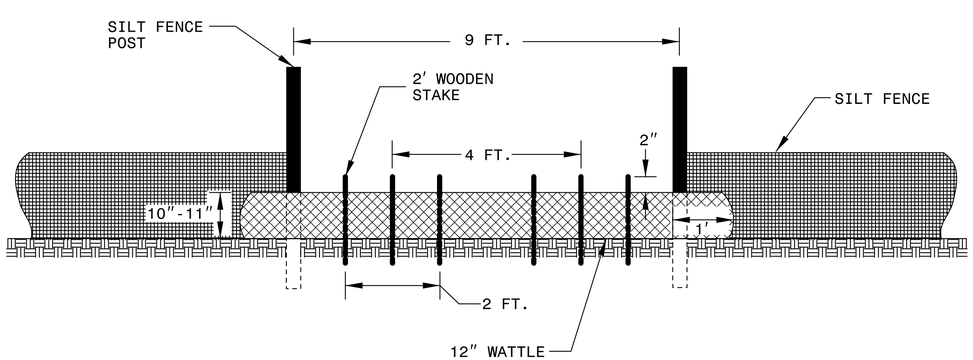

VIEW FROM SLOPE

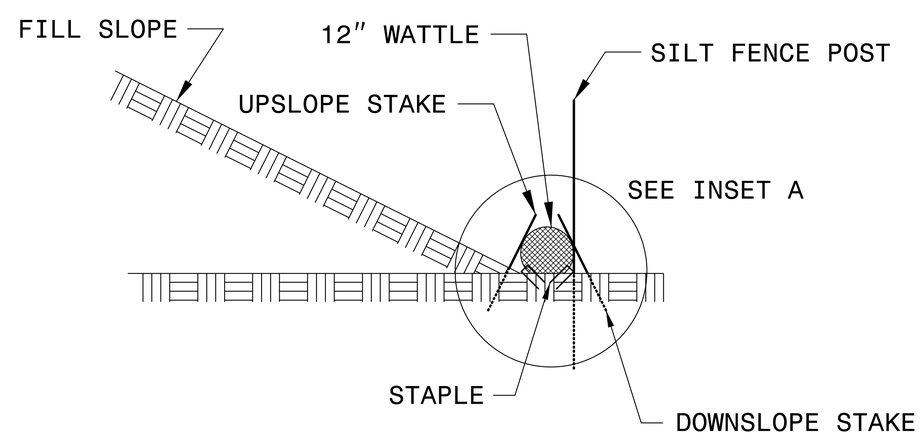

SIDE VIEW

PROJECT REFERENCE NO.	SHEET NO.
17BP.3.R.43	EC-3
R/W SHEET NO.	

COIR FIBER WATTLE BARRIER DETAIL

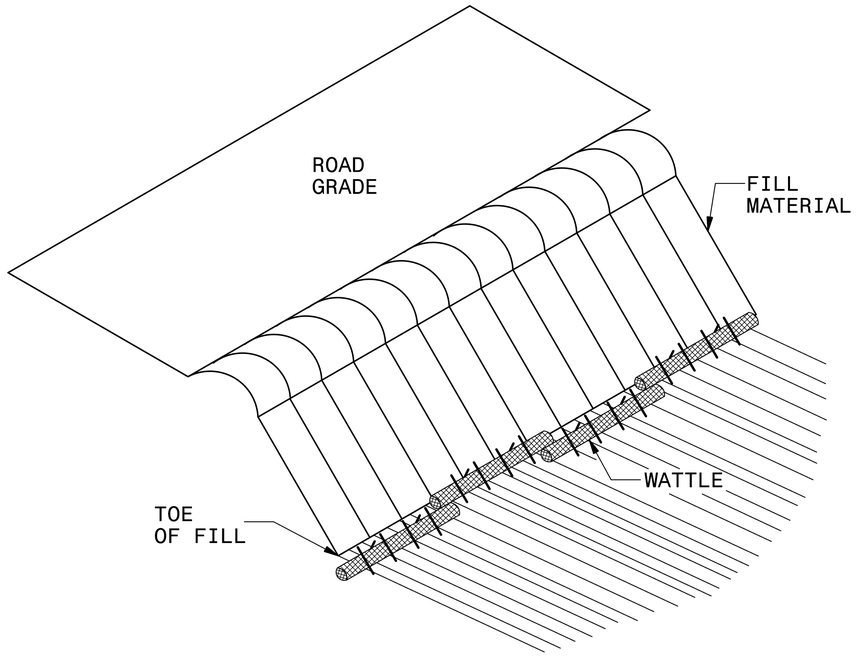

ISOMETRIC VIEW

NOTES:

USE MINIMUM 18 IN. NOMINAL DIAMETER COIR FIBER (COCONUT) WATTLE AND LENGTH OF 10 FT.

EXCAVATE A 2 TO 3 INCH TRENCH FOR WATTLE TO BE PLACED.

DO NOT PLACE WATTLES ON TOE OF SLOPE.

USE 2 FT. WOODEN STAKES WITH A 2 IN. BY 2 IN. NOMINAL CROSS SECTION.

INSTALL A MINIMUM OF 2 UPSLOPE STAKES AND 4 DOWNSLOPE STAKES AT AN ANGLE TO WEDGE WATTLE TO GROUND.

PROVIDE STAPLES MADE OF 0.125 IN. DIAMETER STEEL WIRE FORMED INTO A U SHAPE NOT LESS THAN 12″ IN LENGTH.

INSTALL STAPLES APPROXIMATELY EVERY 1 LINEAR FOOT ON BOTH SIDES OF WATTLE AND AT EACH END TO SECURE IT TO THE SOIL.

FOR BREAKS ALONG LARGE SLOPES, USE MAXIMUM SPACING OF 20 FT.

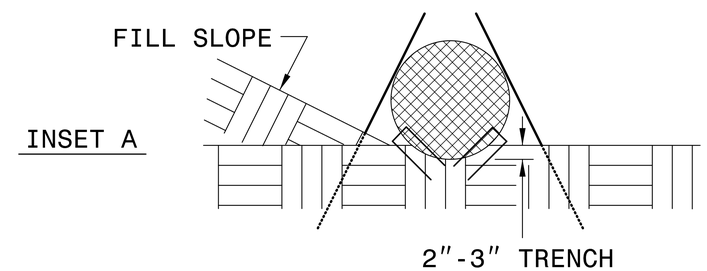

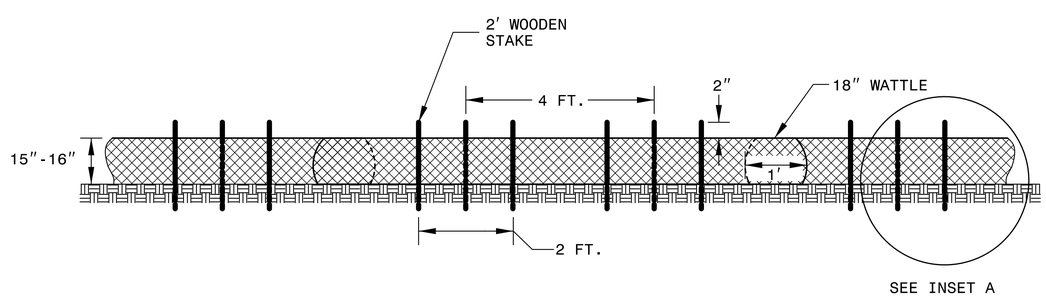

FRONT VIEW

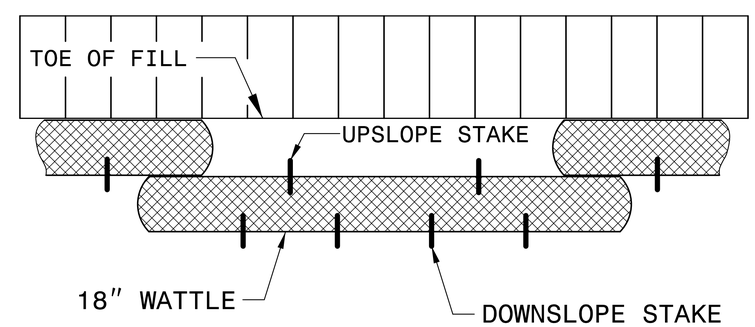

TOP VIEW

PROJECT REFERENCE NO.	SHEET NO.
17BP.3.R.43	EC-4

COIR FIBER WATTLE WITH POLYACRYLAMIDE (PAM) DETAIL

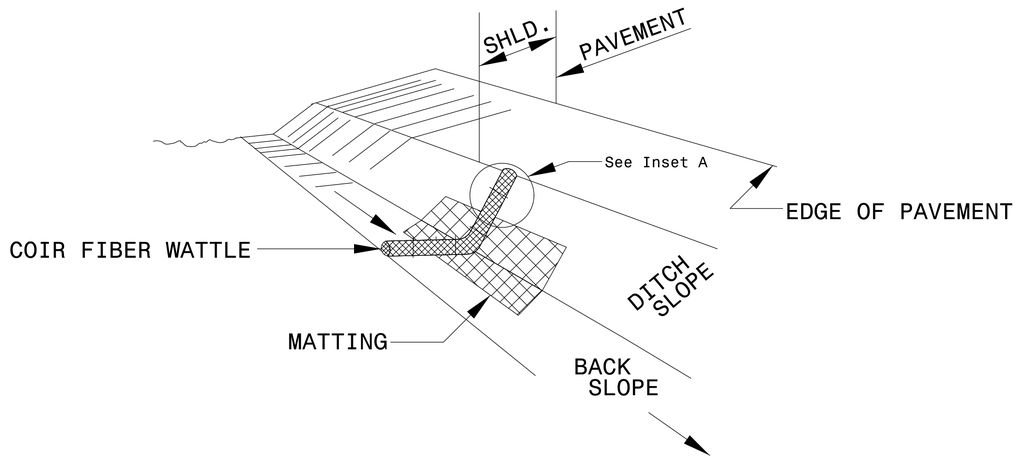

ISOMETRIC VIEW

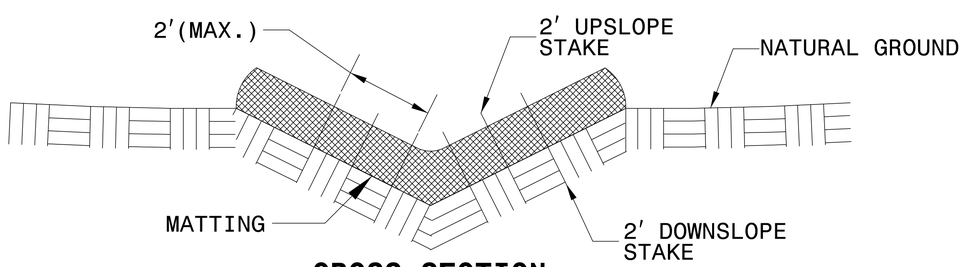

CROSS SECTION VEE DITCH

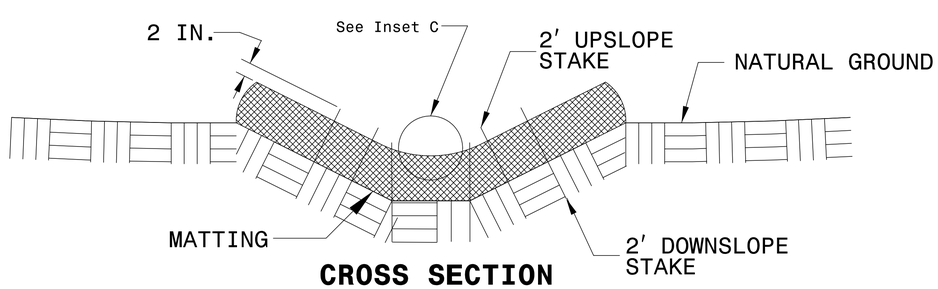

CROSS SECTION TRAPEZOIDAL DITCH

NOTES:

USE MINIMUM 12 IN. DIAMETER COIR FIBER (COCONUT FIBER) WATTLE.

USE 2 FT. WOODEN STAKES WITH A 2 IN. BY 2 IN. NOMINAL CROSS SECTION.

ONLY INSTALL WATTLE(S) TO A HEIGHT IN DITCH SO FLOW WILL NOT WASH AROUND WATTLE AND SCOUR DITCH SLOPES AND AS DIRECTED.

INSTALL A MINIMUM OF 2 UPSLOPE STAKES AND 4 DOWNSLOPE STAKES AT AN ANGLE TO WEDGE WATTLE TO BOTTOM OF DITCH.

PROVIDE STAPLES MADE OF 0.125 IN. DIAMETER STEEL WIRE FORMED INTO A U SHAPE NOT LESS THAN 12" IN LENGTH.

INSTALL STAPLES APPROXIMATELY EVERY 1 LINEAR FOOT ON BOTH SIDES OF WATTLE AND AT EACH END TO SECURE IT TO THE SOIL.

INSTALL MATTING IN ACCORDANCE WITH SECTION 1631 OF THE STANDARD SPECIFICATIONS.

PRIOR TO POLYACRYLAMIDE (PAM) APPLICATION, OBTAIN A SOIL SAMPLE FROM PROJECT LOCATION, AND FROM OFFSITE MATERIAL, AND ANALYZE FOR APPROPRIATE PAM FLOCCULANT TO BE APPLIED TO EACH WATTLE.

INITIALLY APPLY 2 OUNCES OF ANIONIC OR NEUTRALLY CHARGED PAM OVER WATTLE WHERE WATER WILL FLOW AND 1 OUNCE OF PAM ON MATTING ON EACH SIDE OF WATTLE. REAPPLY PAM AFTER EVERY RAINFALL EVENT THAT IS EQUAL TO OR EXCEEDS 0.50 IN.

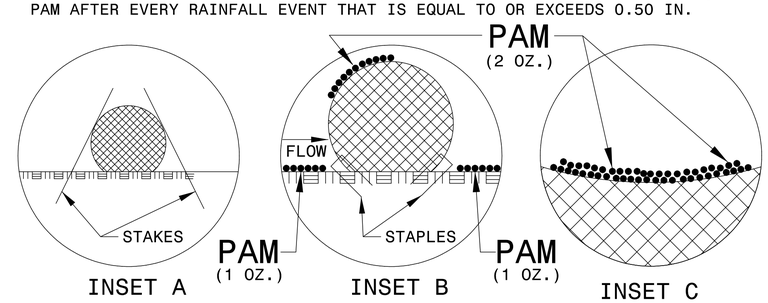

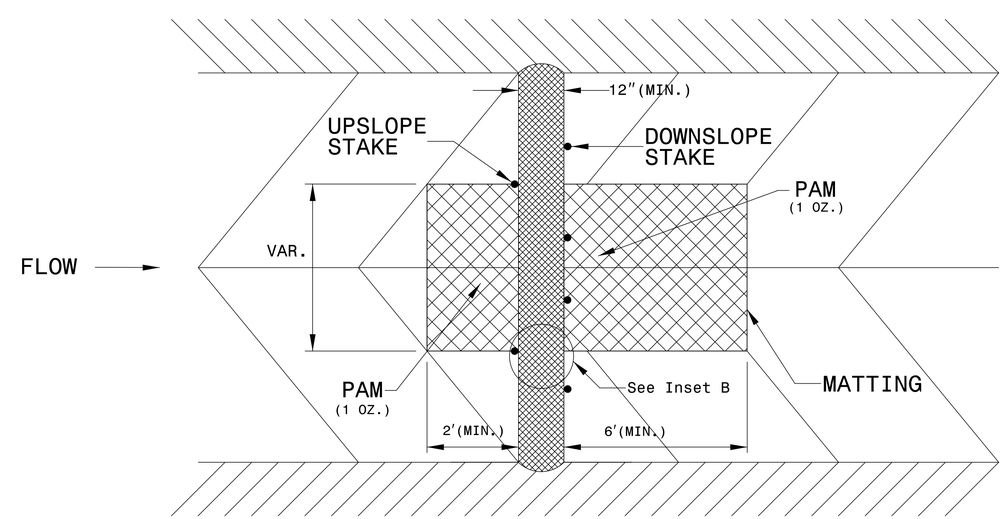

TOP VIEW

6/2/99

3:39:16 PM
17BP.3.R.43_ec_detail.dgn
$$$$USERNAME$$$$

PROJECT REFERENCE NO.	SHEET NO.
17BP.3.R.43	EC-5

DIVISION OF HIGHWAYS
STATE OF NORTH CAROLINA

SOIL STABILIZATION TIMEFRAMES

SITE DESCRIPTION	STABILIZATION TIME	TIMEFRAME EXCEPTIONS
PERIMETER DIKES, SWALES, DITCHES AND SLOPES	7 DAYS	NONE
HIGH QUALITY WATER (HQW) ZONES	7 DAYS	NONE
SLOPES STEEPER THAN 3:1	7 DAYS	IF SLOPES ARE 10' OR LESS IN LENGTH AND ARE NOT STEEPER THAN 2:1, 14 DAYS ARE ALLOWED.
SLOPES 3:1 OR FLATTER	14 DAYS	7 DAYS FOR SLOPES GREATER THAN 50' IN LENGTH.
ALL OTHER AREAS WITH SLOPES FLATTER THAN 4:1	14 DAYS	NONE, EXCEPT FOR PERIMETERS AND HQW ZONES.

MATTING FOR EROSION CONTROL

SHEET NO.	LINE	FROM STATION	TO STATION	SIDE	ESTIMATE (SY)	REMARKS
EC-6	-L-	11+50	14+20	LT	180	INSTALL IN PROP. DITCH
EC-6	-L-	12+56	15+19	RT	175	INSTALL IN PROP. DITCH
				SUBTOTAL	355	
				MISCELLANEOUS MATTING	0	
				TOTAL	355	
				SAY	360	

8/17/99

REVISIONS

PLAN

HNTB NORTH CAROLINA, P.C.
343 E. Six Forks Road, Suite 200
Raleigh, North Carolina 27609
NC License No: C-1554

PROJECT REFERENCE NO.	SHEET NO.
17BP.3.R.43	EC-6
R/W SHEET NO.	

ALLEN T. HODGES, E.I.
EROSION CONTROL
LEVEL III
CERTIFICATION #3633

NAD 83/2011

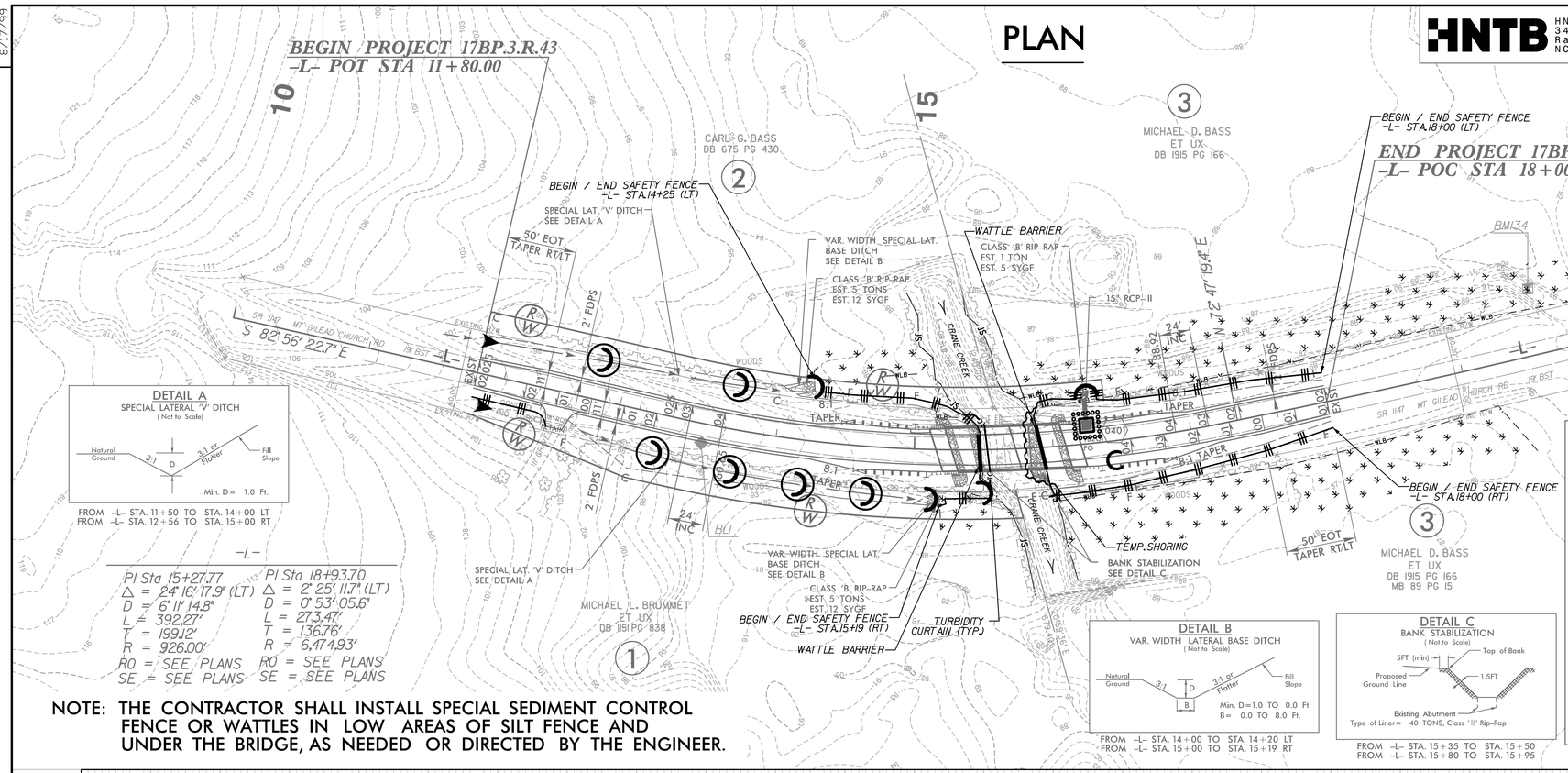

DETAIL A
SPECIAL LATERAL 'V' DITCH
(Not to Scale)

PI Sta 15+27.77	PI Sta 18+93.70
Δ = 24° 16' 17.9" (LT)	Δ = 2° 25' 11.7" (LT)
D = 6° 11' 14.8"	D = 0° 53' 05.6"
L = 392.27'	L = 273.47'
T = 199.12'	T = 136.76'
R = 926.00'	R = 6,474.93'
RO = SEE PLANS	RO = SEE PLANS
SE = SEE PLANS	SE = SEE PLANS

NOTE: THE CONTRACTOR SHALL INSTALL SPECIAL SEDIMENT CONTROL FENCE OR WATTLES IN LOW AREAS OF SILT FENCE AND UNDER THE BRIDGE, AS NEEDED OR DIRECTED BY THE ENGINEER.

DETAIL B
VAR. WIDTH LATERAL BASE DITCH
(Not to Scale)

DETAIL C
BANK STABILIZATION
(Not to Scale)

TEMPORARY SHORING NOTES:
1: THE CONTRACTOR SHALL INSTALL TEMPORARY SHORING AS SHOWN UPON REMOVAL OF THE EXISTING BRIDGE.
2: CONSTRUCTION AREA SHALL BE DEWATERED INTO SPECIAL STILLING BASIN.
3: EXCAVATE BANK AS SHOWN AND INSTALL BANK STABILIZATION.
4: REMOVE TEMPORARY SHORING.

SKETCH OF BRIDGE IN RELATIONSHIP TO PAVEMENT
NTS

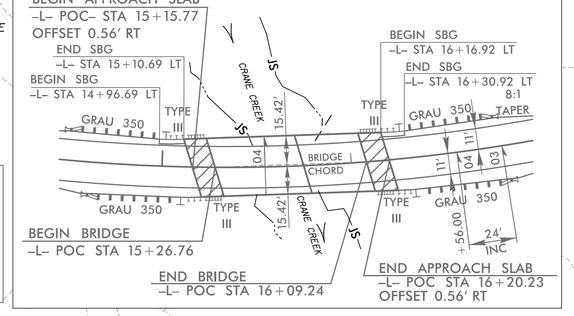

PROFILE

MATERIAL TO BE REMOVED

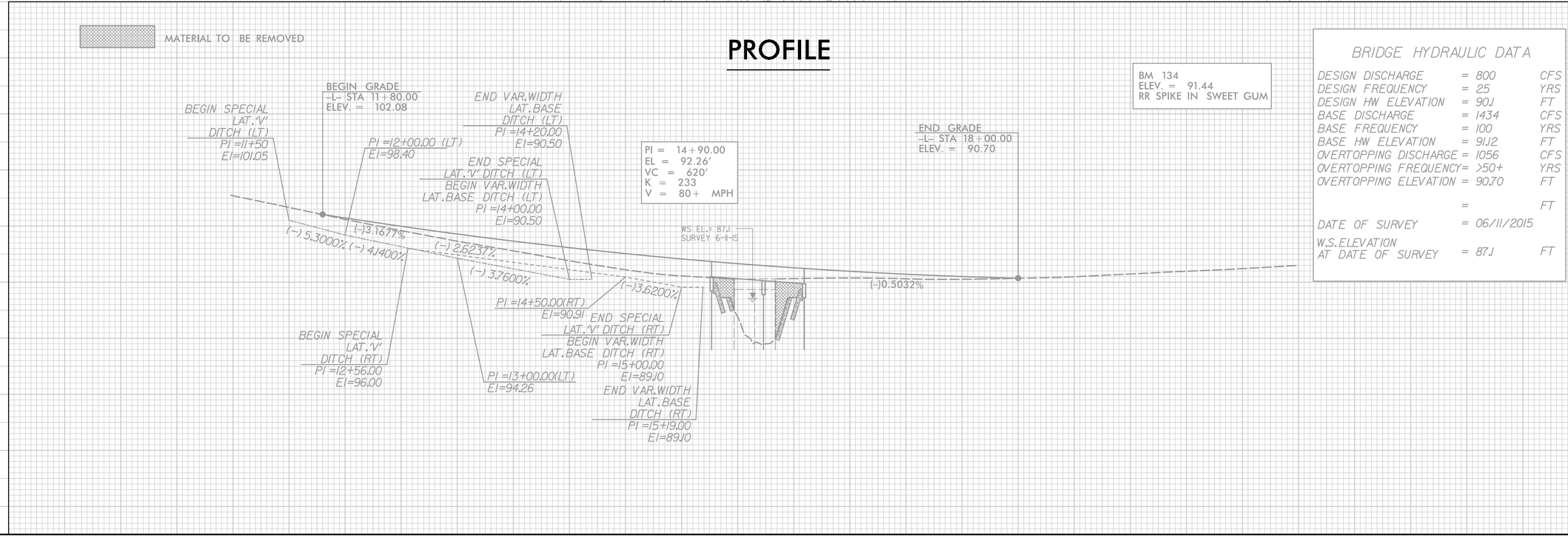

BM 134
ELEV. = 91.44
RR SPIKE IN SWEET GUM

BRIDGE HYDRAULIC DATA

DESIGN DISCHARGE	= 800	CFS
DESIGN FREQUENCY	= 25	YRS
DESIGN HW ELEVATION	= 90.1	FT
BASE DISCHARGE	= 1434	CFS
BASE FREQUENCY	= 100	YRS
BASE HW ELEVATION	= 91.2	FT
OVERTOPPING DISCHARGE	= 1056	CFS
OVERTOPPING FREQUENCY	= >50+	YRS
OVERTOPPING ELEVATION	= 90.70	FT
	=	FT
DATE OF SURVEY	= 06/11/2015	
W.S. ELEVATION AT DATE OF SURVEY	= 87.1	FT

5:07:53 PM
17BP.3.R.43_ec_psh.dgn
$$$$USERNAME$$$$

TIP PROJECT: 17BP.3.R.43

T.I.P. NO.	SHEET NO.
17BP.3.R.43	UO–1

STATE OF NORTH CAROLINA
DIVISION OF HIGHWAYS

UTILITIES BY OTHERS PLANS
SAMPSON COUNTY

HNTB
HNTB NORTH CAROLINA, P.C.
343 E. Six Forks Road, Suite 200
Raleigh, North Carolina 27609
NC License No: C-1554

DATE: FEBRUARY 23, 2016

LOCATION: BRIDGE NO. 13 OVER CRANE CREEK ON SR 1147 (MT. GILEAD CHURCH ROAD)

TYPE OF WORK: UTILITY BY OTHERS RELOCATION

NAD 83/2011

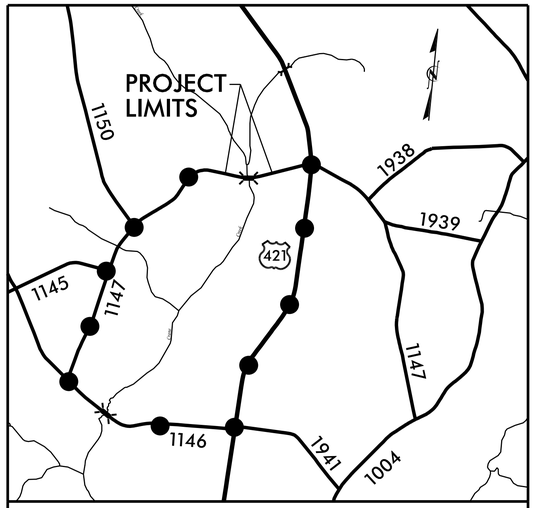

VICINITY MAP

OFFSITE DETOUR

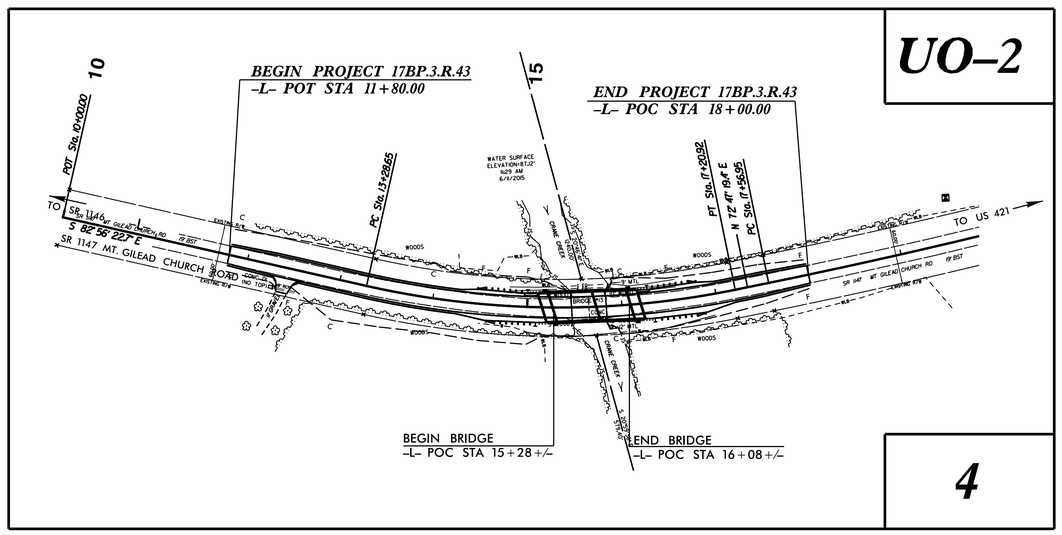

GRAPHIC SCALES

50 25 0 50 100
PLANS

50 25 0 50 100
PROFILE (HORIZONTAL)

10 5 0 10 20
PROFILE (VERTICAL)

INDEX OF SHEETS

SHEET NO.	DESCRIPTION
UO–1	TITLE SHEET
UO–2	PLAN SHEET

UTILITY OWNERS ON PROJECT

(1) PHONE – CENTURYLINK

UTILITY DESIGN BY:
M A Engineering Consultants, Inc.
NC License: F-0160
598 East Chatham Street Suite 137 Cary, NC 27511
Phone: 919.297.0220 Fax: 919.297.0221

NCDOT PROJECT ENGINEER:
ANTHONY LAW

PREPARED FOR:
NORTH CAROLINA
DEPARTMENT OF TRANSPORTATION
DIVISION BRIDGE PROGRAM

$$$$$$$$$$ SYSTIME $$$$$$$$$$ DGN $$$$$$$$$$ DSENAME $$$$$$$$$$

PROJECT REFERENCE NO.	SHEET NO.
17BP.3.R.43	UO-2

UTILITIES BY OTHERS

NOTE:
ALL PROPOSED UTILITY WORK SHOWN ON THIS SHEET WILL BE DONE BY OTHERS

HNTB
HNTB NORTH CAROLINA, P.C.
343 E. Six Forks Road, Suite 200
Raleigh, North Carolina 27609
NC License No: C-1554

DATE: MARCH 5, 2014

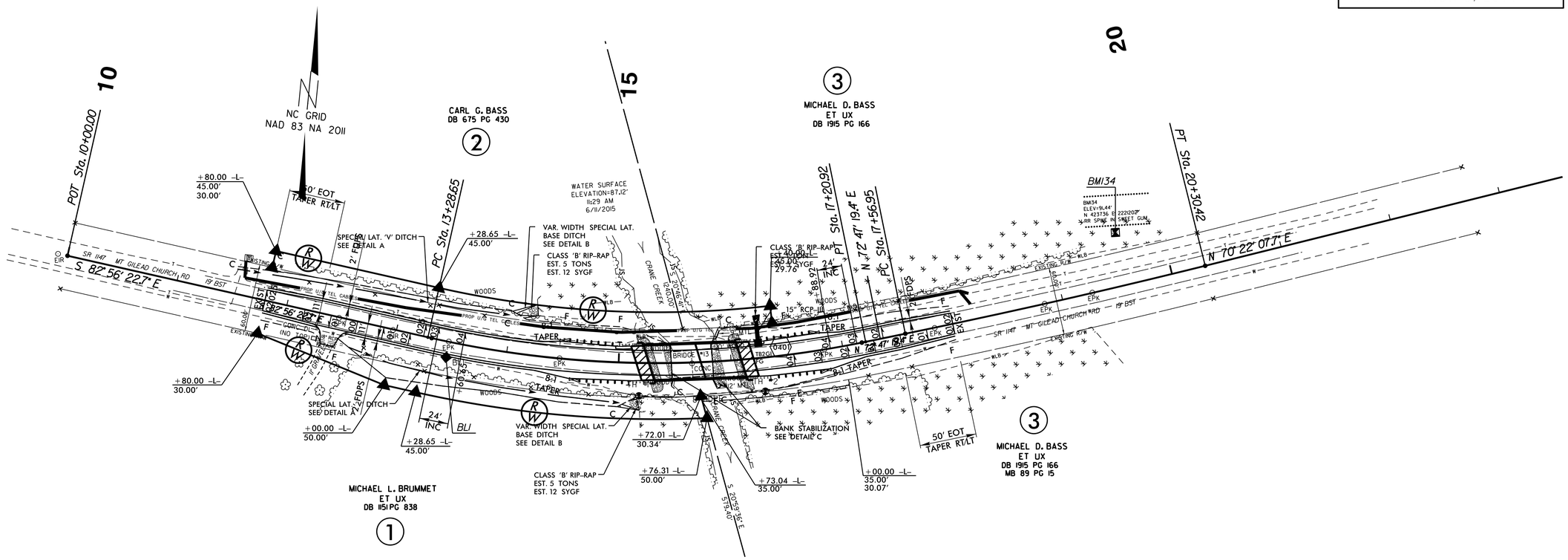

M A Engineering Consultants, Inc.
598 East Chatham Street - Suite 137
Cary, NC 27511
Phone: 919.297.0220 Fax: 919.297.0221
NC License: F-0160

PROJ. REFERENCE NO.	SHEET NO.
17BP.3.R.43	X-1

0 10

Note: Approximate quantities only. Unclassified Excavation, Borrow Excavation, Fine Grading, Clearing and Grubbing, and Removal of Existing Pavement will be paid for at the contract lump sum price for "Grading."

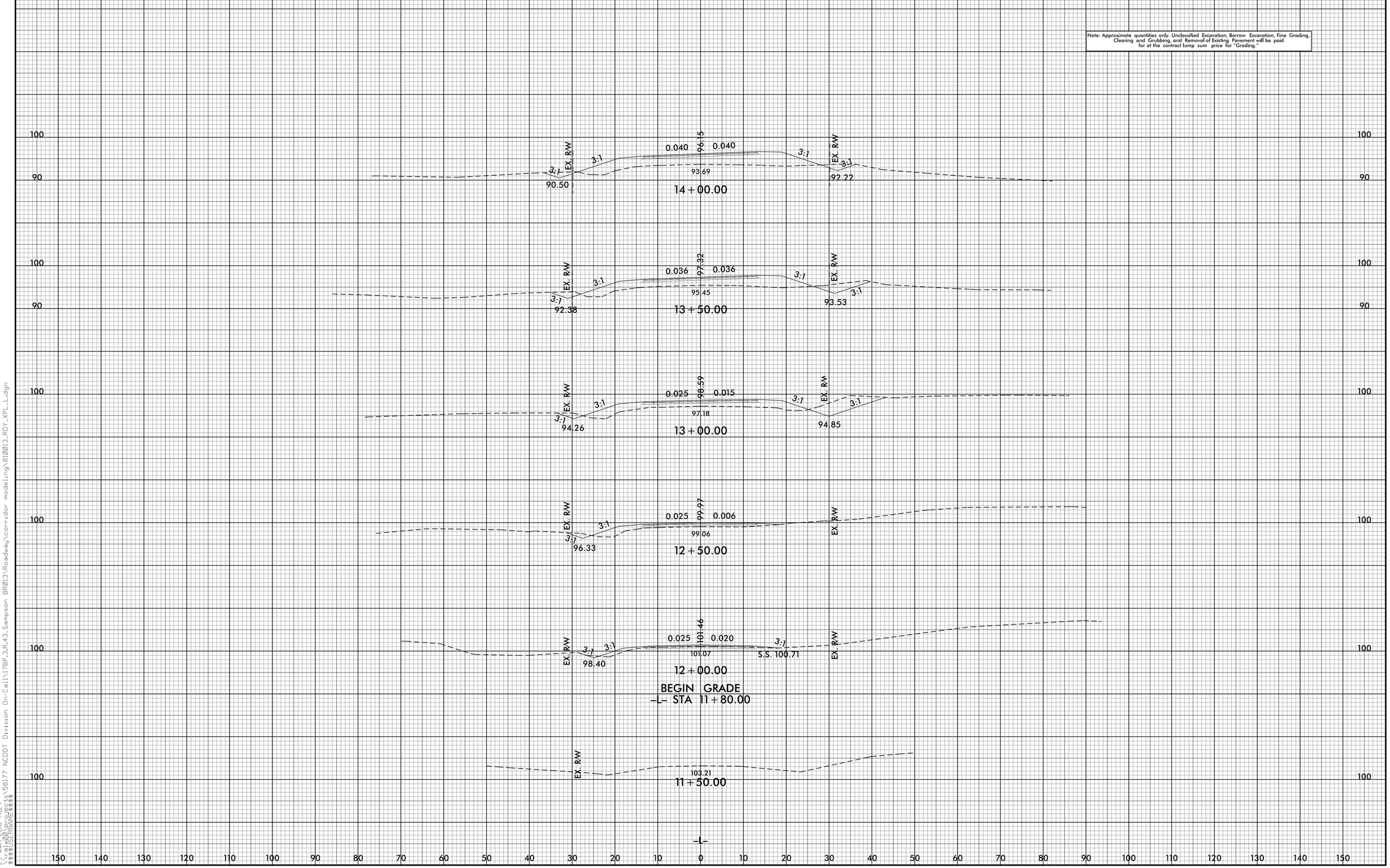

8/23/99

29-MAR-2016 14:24
\\rdwp02\projects\58177 NCDOT Division On-Call\17BP.3.R.43_Sampson BR013\Roadway\corridor modeling\810013_RDY_XPL_L.dgn
$$$$USERNAME$$$$

PROJ. REFERENCE NO.	SHEET NO.
17BP.3.R.43	X-2

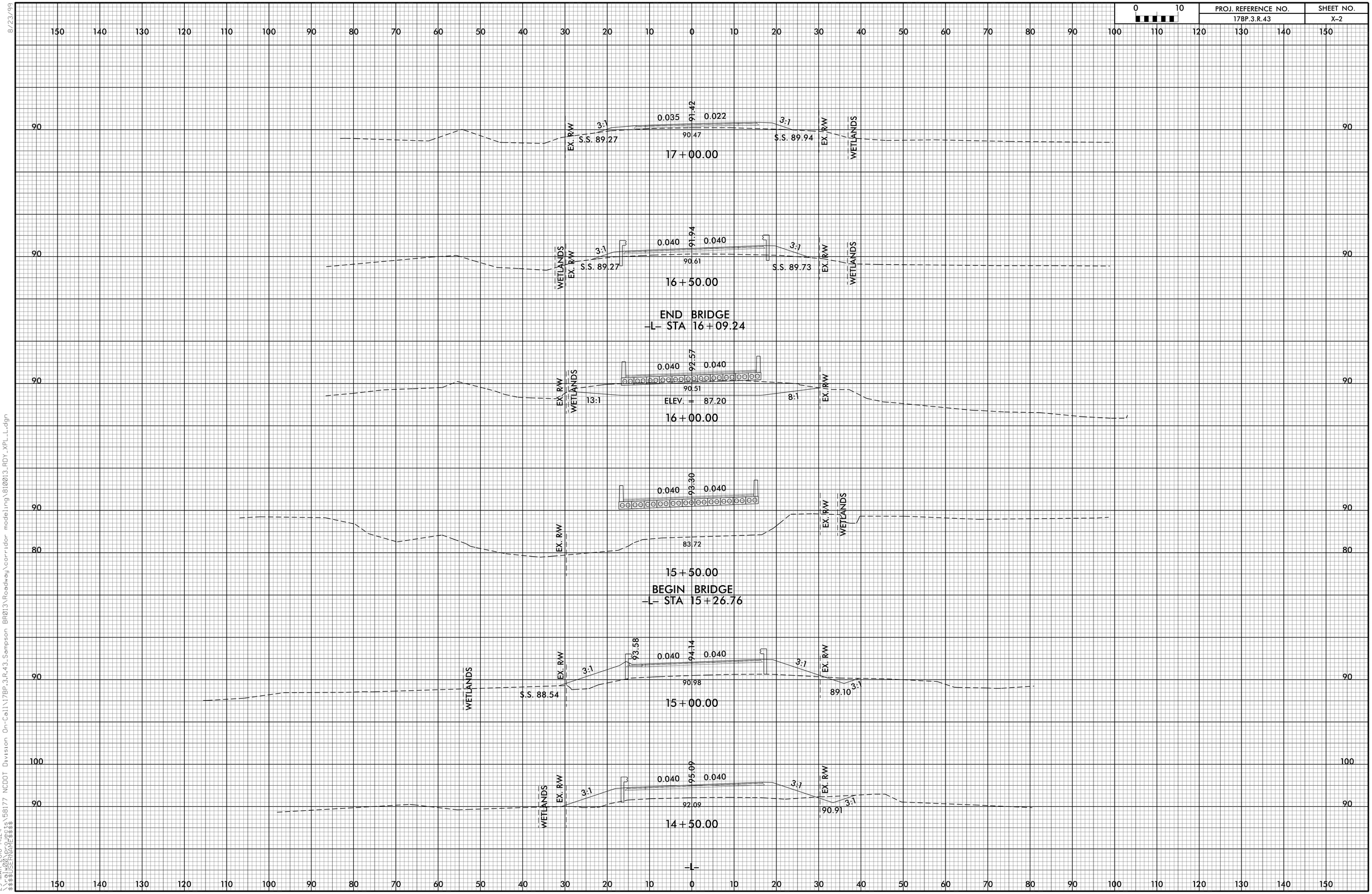

29-MAR-2016 14:24
\\rdu00\Projects\58177 NCDOT Division On-Call\17BP.3.R.43_Sampson BR013\Roadway\corridor modeling\B10013_RDY_XPL_L.dgn
$$$$USERNAME$$$$

8/23/99

PROJ. REFERENCE NO.	SHEET NO.
17BP.3.R.43	X-3

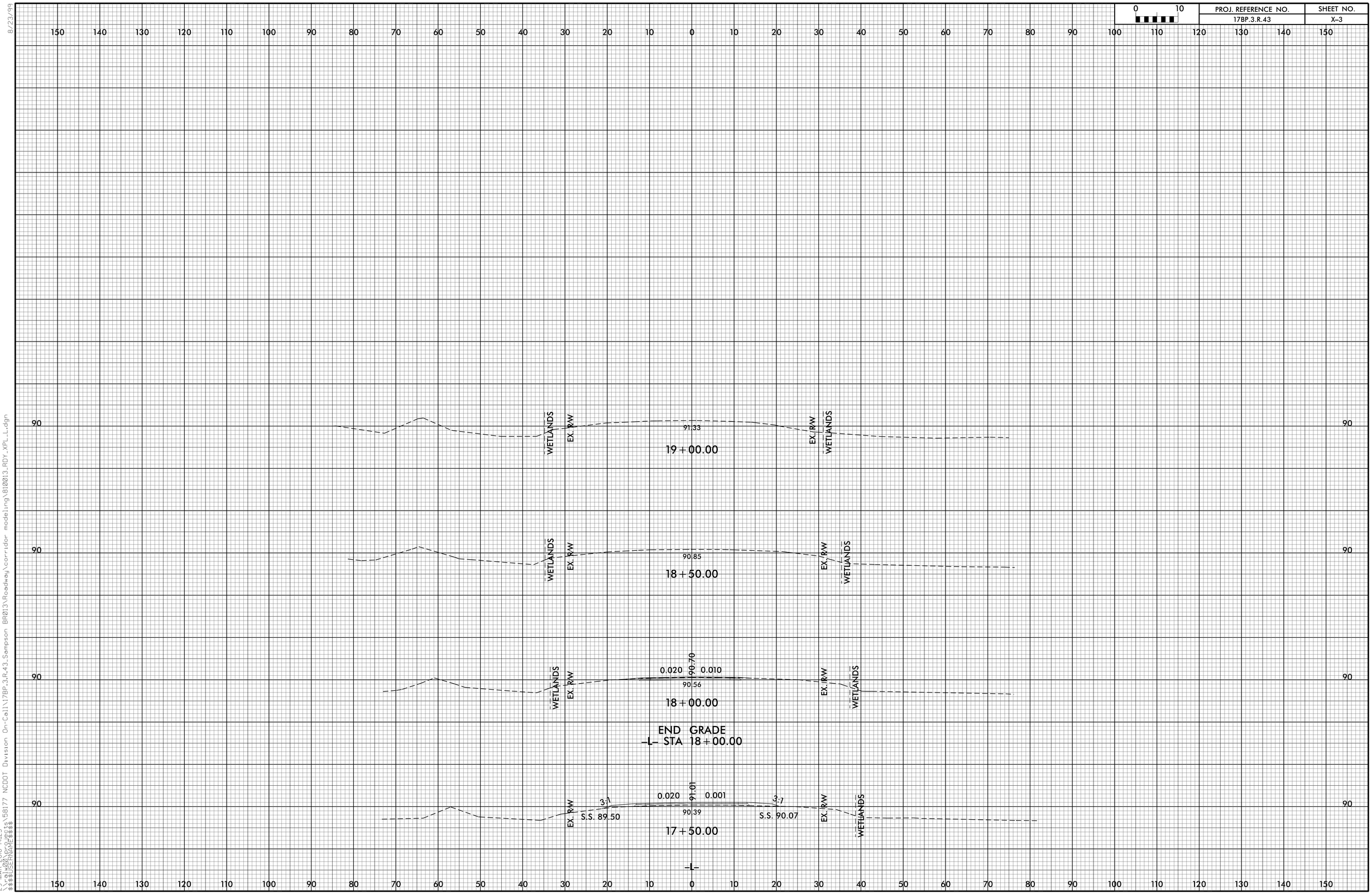

8/23/99

29-MAR-2016 14:25
\\rdwp02\projects\58177 NCDOT Division On-Call\17BP.3.R.43_Sampson BR013\Roadway\corridor modeling\BI0013_RDY_XPL_L.dgn
$$$$USERNAME$$$$

DocuSign Envelope ID: CE9E3096-21DB-47B0-AC69-F9361F4EEA06

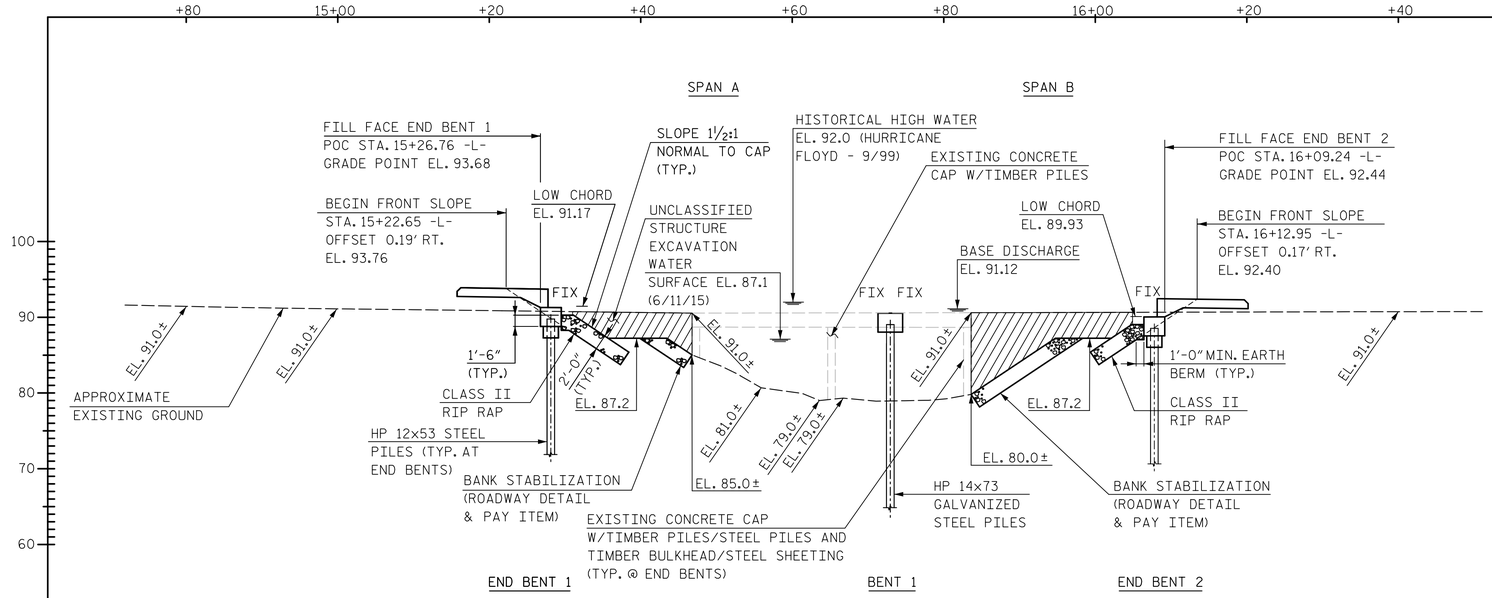

SECTION ALONG ℄ SURVEY -L-

END BENTS ON SECTION AT RIGHT ANGLES TO END BENTS

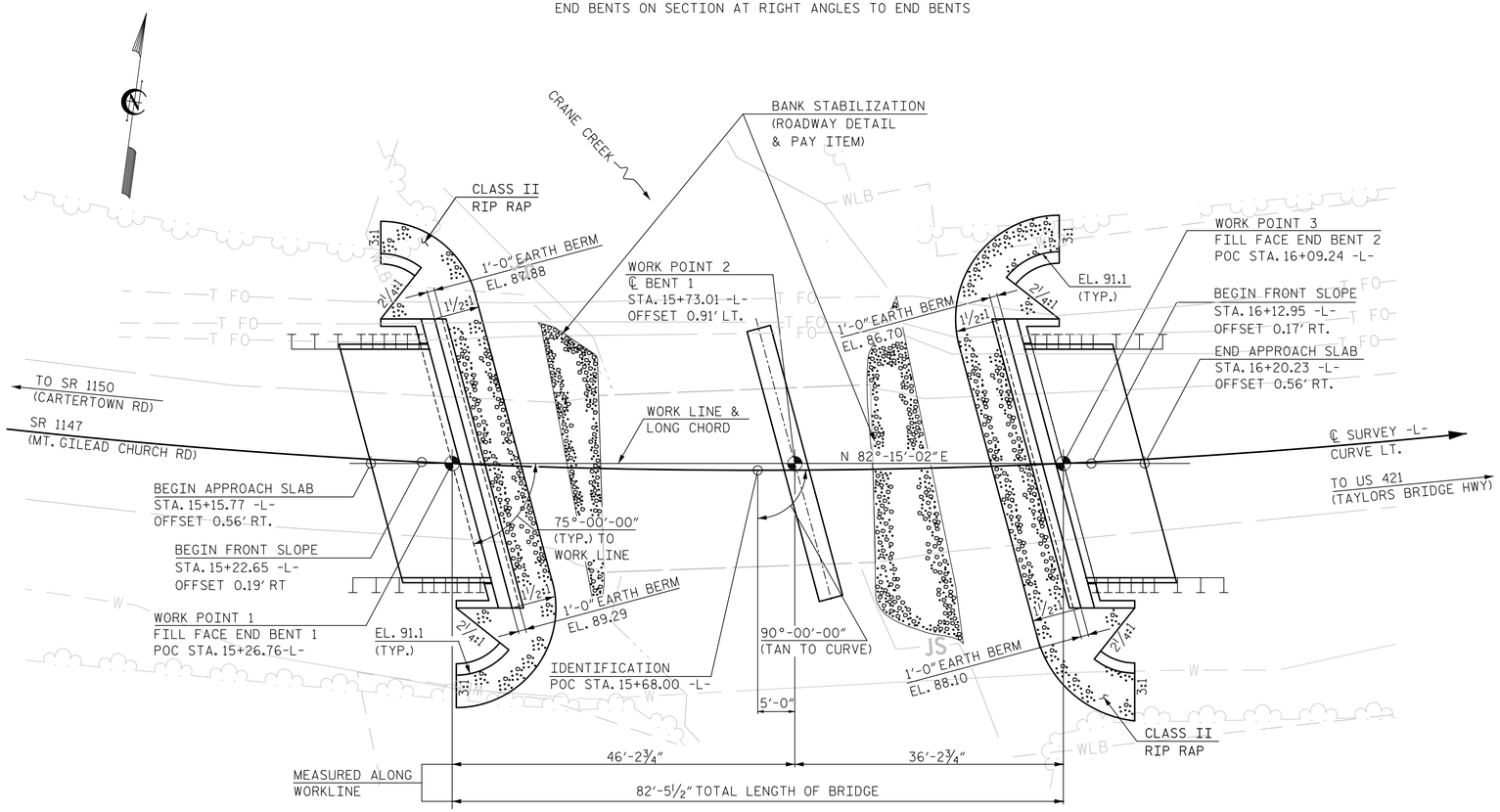

PLAN

NOTE: PILES NOT SHOWN FOR CLARITY.

WORKLINE FOR BRIDGE SHALL BE THE LONG CHORD BETWEEN FILL FACE WORK POINTS AND ITS EXTENSION.

FOR GENERAL NOTES, SEE SHEET 2.

BRIDGE HYDRAULIC DATA

DESIGN DISCHARGE	=	800 CFS
FREQUENCY OF DESIGN FLOOD	=	25 YR
DESIGN HIGH WATER ELEVATION	=	90.1 FT.
DRAINAGE AREA	=	7.2 SQ. MI.
BASIC DISCHARGE (Q100)	=	1434 CFS
BASIC HIGH WATER ELEVATION	=	91.12 FT.

OVERTOPPING FLOOD DATA

OVERTOPPING DISCHARGE	=	1056 CFS
FREQUENCY OF OVERTOPPING FLOOD	=	>50+ YR
OVERTOPPING FLOOD ELEVATION	=	90.70 FT.

NOTE: OVERTOPPING OCCURS AT ℄ ROADWAY STA. 18+00.00

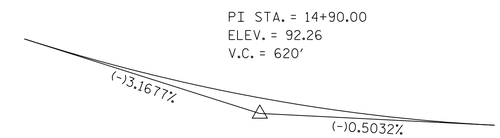

GRADE DATA -L-

CURVE DATA -L-

PI STA. = 15+27.77
△ = 24°16'17.9" (LT)
D = 6°11'14.8"
L = 392.27'
T = 199.12'
R = 926.00'

I HEREBY CERTIFY THESE PLANS ARE AS-BUILT PLANS

PROJECT NO. 17BP.3.R.43

SAMPSON COUNTY

STATION: POC 15+68.00 -L-

SHEET 1 OF 2 REPLACES BRIDGE NO. 13

DocuSigned by: Paul J. Barber
18DF1B57368741E...

NORTH CAROLINA PROFESSIONAL SEAL 12916 ENGINEER PAUL J. BARBER

3/29/2016

DOCUMENT NOT CONSIDERED FINAL UNLESS ALL SIGNATURES COMPLETED

STATE OF NORTH CAROLINA
DEPARTMENT OF TRANSPORTATION
RALEIGH

GENERAL DRAWING
FOR BRIDGE ON SR 1147
OVER CRANE CREEK
BETWEEN SR 1150
AND US 421

HNTB NORTH CAROLINA, P.C.
NC License No. C-1554
343 E. Six Forks Rd., Suite 200, Raleigh, N.C. 27609

DRAWN BY J. BAYNE DATE 2/16
CHECKED BY P. BARBER DATE 2/16
DWG. NO. 1

REVISIONS						SHEET NO.
NO.	BY	DATE	NO.	BY	DATE	S-1
1			3			TOTAL SHEETS
2			4			17

DocuSign Envelope ID: CE9E3096-21DB-47B0-AC69-F9361F4EEA06

BM - "BM 134", RAILROAD SPIKE IN SWEET GUM, 47.6' LT OF STA. 19+59.53 EL. 91.44

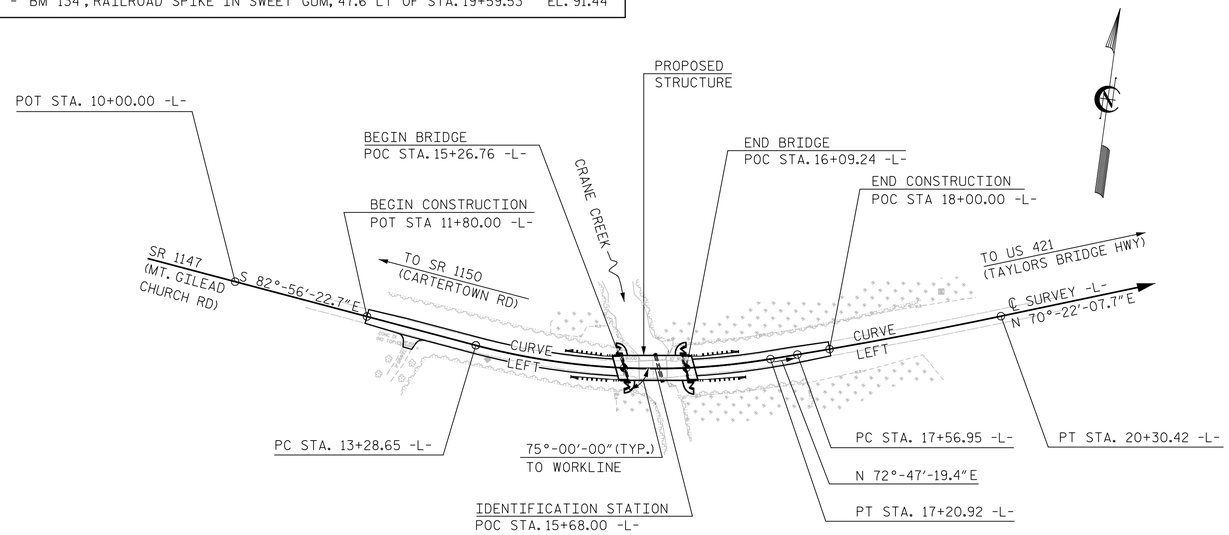

LOCATION SKETCH

FOR UTILITY INFORMATION, SEE UTILITY PLANS AND SPECIAL PROVISIONS.

FOUNDATION NOTES:

FOR PILES, SEE GEOTECHNICAL SPECIAL PROVISIONS AND SECTION 450 OF THE STANDARD SPECIFICATIONS.

PILES AT END BENT NO. 1 ARE DESIGNED FOR A FACTORED RESISTANCE OF 61 TONS PER PILE.

DRIVE PILES AT END BENT NO. 1 TO A REQUIRED DRIVING RESISTANCE OF 105 TONS PER PILE.

PILES AT END BENT NO. 2 ARE DESIGNED FOR A FACTORED RESISTANCE OF 55 TONS PER PILE.

DRIVE PILES AT END BENT NO. 2 TO A REQUIRED DRIVING RESISTANCE OF 95 TONS PER PILE.

PILES AT BENT NO. 1 ARE DESIGNED FOR A FACTORED RESISTANCE OF 88 TONS PER PILE.

DRIVE PILES AT BENT NO. 1 TO A REQUIRED DRIVING RESISTANCE OF 150 TONS PER PILE. THIS REQUIRED DRIVING RESISTANCE INCLUDES ADDITIONAL RESISTANCE FOR DOWNDRAG OR SCOUR.

INSTALL PILES AT BENT NO. 1 TO A TIP ELEVATION NO HIGHER THAN 55.0 FT.

THE SCOUR CRITICAL ELEVATION FOR BENT NO. 1 IS ELEVATION 74.0 FT. SCOUR CRITICAL ELEVATIONS ARE USED TO MONITOR POSSIBLE SCOUR PROBLEMS DURING THE LIFE OF THE STRUCTURE.

TESTING PILES WITH THE PDA DURING DRIVING, RESTRIKING OR REDRIVING MAY BE REQUIRED. THE ENGINEER WILL DETERMINE THE NEED FOR PDA TESTING. FOR PDA TESTING, SEE SECTION 450 OF THE STANDARD SPECIFICATIONS.

OBSERVE A ONE MONTH WAITING PERIOD AFTER CONSTRUCTING THE EMBANKMENT TO 2 FT. ABOVE FINISHED GRADE BEFORE BEGINNING END BENT CONSTRUCTION AT END BENT NO. 1 AND NO. 2. FOR BRIDGE WAITING PERIODS, SEE ROADWAY PLANS AND SPECIAL PROVISIONS.

TOTAL BILL OF MATERIAL

	REMOVAL OF EXISTING STRUCTURE AT STATION 15+68.00 -L-	PDA TESTING	UNCLASSIFIED STRUCTURE EXCAVATION AT STATION 15+68.00 -L-	CLASS A CONCRETE	BRIDGE APPROACH SLABS AT STATION 15+68.00 -L-	REINFORCING STEEL	HP 12x53 STEEL PILES		HP 14x73 GALVANIZED STEEL PILES		PILE REDRIVES	VERTICAL CONCRETE BARRIER RAIL	RIP RAP CLASS II (2'-0" THICK)	GEOTEXTILE FOR DRAINAGE	ELASTOMERIC BEARINGS	3'-0"x1'-9" PRESTRESSED CONCRETE CORED SLABS	
	LUMP SUM	EACH	LUMP SUM	CU. YDS.	LUMP SUM	LBS.	NO.	LIN. FT.	NO.	LIN. FT.	EACH	LIN. FT.	TONS	SQ. YDS.	LUMP SUM	NO.	LIN. FT.
SUPERSTRUCTURE	LUMP SUM	—	—	—	LUMP SUM	—	—	—	—	—	—	160.5	—	—	LUMP SUM	22	880
END BENT NO. 1	—	—	LUMP SUM	14.5	—	2,181	7	385	—	—	4	—	85	95	—	—	—
BENT NO. 1	—	—	—	11.3	—	2,226	—	—	8	520	4	—	—	—	—	—	—
END BENT NO. 2	—	—	LUMP SUM	14.5	—	2,181	7	350	—	—	4	—	65	70	—	—	—
TOTAL	LUMP SUM	2	LUMP SUM	40.3	LUMP SUM	6,588	14	735	8	520	12	160.5	150	165	LUMP SUM	22	880

GENERAL NOTES

ASSUMED LIVE LOAD = HL-93 OR ALTERNATE LOADING.

THIS BRIDGE HAS BEEN DESIGNED IN ACCORDANCE WITH THE AASHTO LRFD BRIDGE DESIGN SPECIFICATIONS.

THIS BRIDGE IS LOCATED IN SEISMIC ZONE 1.

THIS BRIDGE SHALL BE CONSTRUCTED USING TOP-DOWN CONSTRUCTION METHODS. THE USE OF A TEMPORARY CAUSEWAY OR WORK BRIDGE IS NOT PERMITTED.

FOR OTHER DESIGN DATA AND GENERAL NOTES, SEE SHEET SN.

FOR SUBMITTAL OF WORKING DRAWINGS, SEE SPECIAL PROVISIONS.

FOR FALSEWORK AND FORMWORK, SEE SPECIAL PROVISIONS.

FOR CRANE SAFETY, SEE SPECIAL PROVISIONS.

FOR GROUT FOR STRUCTURES, SEE SPECIAL PROVISIONS.

INASMUCH AS THE PAINT SYSTEM ON THE EXISTING STRUCTURAL STEEL CONTAINS LEAD, THE CONTRACTOR'S ATTENTION IS DIRECTED TO ARTICLE 107-1 OF THE STANDARD SPECIFICATIONS. ANY COST RESULTING FROM COMPLIANCE WITH APPLICABLE STATE OR FEDERAL REGULATIONS PERTAINING TO HANDLING OF MATERIALS CONTAINING LEAD BASED PAINT SHALL BE INCLUDED IN THE BID PRICE FOR "REMOVAL OF EXISTING STRUCTURE AT STATION 15+68.00 -L-"

THE MATERIAL SHOWN IN THE CROSS-HATCHED AREA SHALL BE EXCAVATED FOR A DISTANCE OF 19.5 FT. EACH SIDE OF CENTERLINE ROADWAY AS DIRECTED BY THE ENGINEER. THIS WORK WILL BE PAID FOR AT THE CONTRACT LUMP SUM PRICE FOR UNCLASSIFIED STRUCTURE EXCAVATION. SEE SECTION 412 OF THE STANDARD SPECIFICATIONS.

THE EXISTING TWO SPAN STRUCTURE WITH SPAN LENGTHS OF 18'-5", AND 18'-5" WITH 12 LINES OF W12x16.5 STEEL I-BEAMS AT 2'-2½" CTS WITH A REINFORCED CONCRETE DECK WITH A 25.4' OUT TO OUT DECK WIDTH ON REINFORCED CONCRETE CAPS AND TIMBER PILES WITH STEEL CRUTCH PILES AND STEEL SHEETING AT END BENTS SHALL BE REMOVED. IN ADDITION, ANY PILES REMAINING FROM PREVIOUS BRIDGE CONSTRUCTION OR MAINTENANCE OPERATIONS SHALL BE REMOVED AND INCLUDED IN THE LUMP SUM PAY ITEM FOR "REMOVAL OF EXISTING STRUCTURE AT STATION 15+68.00 -L-"

THE SUBSTRUCTURE OF THE EXISTING BRIDGE INDICATED ON THE PLANS IS FROM THE BEST INFORMATION AVAILABLE. SINCE THIS INFORMATION IS SHOWN FOR THE CONVENIENCE OF THE CONTRACTOR, THE CONTRACTOR SHALL HAVE NO CLAIM WHATSOEVER AGAINST THE DEPARTMENT OF TRANSPORTATION FOR ANY DELAYS OR ADDITIONAL COST INCURRED BASED ON DIFFERENCES BETWEEN THE EXISTING BRIDGE SUBSTRUCTURE SHOWN ON THE PLANS AND THE ACTUAL CONDITIONS AT THE PROJECT SITE.

REMOVAL OF THE EXISTING BRIDGE SHALL BE PERFORMED SO AS NOT TO ALLOW DEBRIS TO FALL INTO THE WATER. THE CONTRACTOR SHALL REMOVE THE BRIDGE AND SUBMIT PLANS FOR DEMOLITION IN ACCORDANCE WITH ARTICLE 402-2 OF THE STANDARD SPECIFICATIONS

THIS STRUCTURE HAS BEEN DESIGNED IN ACCORDANCE WITH "HEC 18 - EVALUATING SCOUR AT BRIDGES."

FOR INTERIOR BENT, ONLY PARTIAL GALVANIZING OF THE PILES IS REQUIRED. SEE INTERIOR BENT SHEET FOR REQUIRED GALVANIZED LENGTHS. PAYMENT FOR PARTIALLY GALVANIZED PILES WILL BE MADE UNDER THE CONTRACT UNIT PRICE FOR GALVANIZED STEEL PILES.

FOR EROSION CONTROL MEASURES SEE EROSION CONTROL PLANS.

ASPHALT WEARING SURFACE IS INCLUDED IN ROADWAY QUANTITY ON ROADWAY PLANS.

FOR PLACING LOAD ON STRUCTURE MEMBERS, SEE SPECIAL PROVISIONS.

PROJECT NO. 17BP.3.R.43
SAMPSON COUNTY
STATION: POC 15+68.00 -L-

SHEET 2 OF 2

DocuSigned by: Paul J. Barber
18DF1B57368741E...

NORTH CAROLINA PROFESSIONAL SEAL 12916 ENGINEER PAUL J. BARBER

3/29/2016

DOCUMENT NOT CONSIDERED FINAL UNLESS ALL SIGNATURES COMPLETED

HNTB NORTH CAROLINA, P.C.
NC License No. C-1554
343 E. Six Forks Rd., Suite 200, Raleigh, N.C. 27609

DRAWN BY J. BAYNE DATE 2/16
CHECKED BY P. BARBER DATE 2/16
DWG. NO. 2

STATE OF NORTH CAROLINA
DEPARTMENT OF TRANSPORTATION
RALEIGH

GENERAL DRAWING
FOR BRIDGE ON SR 1147
OVER CRANE CREEK
BETWEEN SR 1150
AND US 421

REVISIONS						SHEET NO.
NO.	BY	DATE	NO.	BY	DATE	S-2
1			3			TOTAL SHEETS
2			4			17

LOAD AND RESISTANCE FACTOR RATING (LRFD) SUMMARY FOR PRESTRESSED CONCRETE GIRDERS

LEVEL		VEHICLE	WEIGHT (W) (TONS)	CONTROLLING LOAD RATING	MINIMUM RATING FACTORS (RF)	TONS = W X RF	STRENGTH I LIMIT STATE											SERVICE III LIMIT STATE						COMMENT NUMBER
								MOMENT					SHEAR						MOMENT					
							LIVELOAD FACTORS	DISTRIBUTION FACTORS (DF)	RATING FACTOR	SPAN	GIRDER LOCATION	DISTANCE FROM LEFT END OF SPAN (ft)	DISTRIBUTION FACTORS (DF)	RATING FACTOR	SPAN	GIRDER LOCATION	DISTANCE FROM LEFT END OF SPAN (ft)	LIVELOAD FACTORS	DISTRIBUTION FACTORS (DF)	RATING FACTOR	SPAN	GIRDER LOCATION	DISTANCE FROM LEFT END OF SPAN (ft)	
DESIGN LOAD RATING		HL-93(Inv)	N/A	1	1.098	--	1.75	0.272	1.36	45'	EL	21.982	0.617	1.46	45'	EL	35.172	0.80	0.272	**1.10**	45'	EL	**21.982**	
		HL-93(Opr)	N/A	--	1.764	--	1.35	0.272	1.76	45'	EL	21.982	0.617	1.89	45'	EL	35.172	N/A	--	--	--	--	--	
		HS-20(Inv)	36.000	2	1.347	48.507	1.75	0.272	1.67	45'	EL	21.982	0.617	1.68	45'	EL	8.793	0.80	0.272	**1.35**	45'	EL	**21.982**	
		HS-20(Opr)	36.000	--	2.165	77.938	1.35	0.272	2.16	45'	EL	21.982	0.617	2.17	45'	EL	8.793	N/A	--	--	--	--	--	
LEGAL LOAD RATING	SV	SNSH	13.500	--	2.632	35.536	1.4	0.272	4.08	45'	EL	21.982	0.617	4.43	45'	EL	35.172	0.80	0.272	2.63	45'	EL	21.982	
		SNGARBS2	20.000	--	2.126	42.513	1.4	0.272	3.29	45'	EL	21.982	0.617	3.32	45'	EL	35.172	0.80	0.272	2.13	45'	EL	21.982	
		SNAGRIS2	22.000	--	2.085	45.877	1.4	0.272	3.19	45'	EL	17.586	0.617	3.15	45'	EL	35.172	0.80	0.272	2.09	45'	EL	21.982	
		SNCOTTS3	27.250	--	1.314	35.814	1.4	0.272	2.04	45'	EL	21.982	0.617	2.23	45'	EL	8.793	0.80	0.272	1.31	45'	EL	21.982	
		SNAGGRS4	34.925	--	1.16	40.51	1.4	0.272	1.8	45'	EL	21.982	0.617	1.97	45'	EL	35.172	0.80	0.272	1.16	45'	EL	21.982	
		SNS5A	35.550	--	1.13	40.167	1.4	0.272	1.75	45'	EL	21.982	0.617	2.06	45'	EL	8.793	0.80	0.272	1.13	45'	EL	21.982	
		SNS6A	39.950	--	1.064	42.522	1.4	0.272	1.65	45'	EL	21.982	0.617	1.94	45'	EL	35.172	0.80	0.272	1.06	45'	EL	21.982	
		SNS7B	42.000	3	1.015	42.617	1.4	0.272	1.57	45'	EL	21.982	0.617	1.98	45'	EL	35.172	0.80	0.272	**1.01**	45'	EL	**21.982**	
	TTST	TNAGRIT3	33.000	--	1.306	43.112	1.4	0.272	2.02	45'	EL	21.982	0.617	2.26	45'	EL	8.793	0.80	0.272	1.31	45'	EL	21.982	
		TNT4A	33.075	--	1.32	43.663	1.4	0.272	2.05	45'	EL	21.982	0.617	2.14	45'	EL	35.172	0.80	0.272	1.32	45'	EL	21.982	
		TNT6A	41.600	--	1.108	46.093	1.4	0.272	1.72	45'	EL	21.982	0.617	2.11	45'	EL	35.172	0.80	0.272	1.11	45'	EL	21.982	
		TNT7A	42.000	--	1.129	47.436	1.4	0.272	1.75	45'	EL	21.982	0.617	1.96	45'	EL	35.172	0.80	0.272	1.13	45'	EL	21.982	
		TNT7B	42.000	--	1.176	49.384	1.4	0.272	1.82	45'	EL	21.982	0.617	1.88	45'	EL	35.172	0.80	0.272	1.18	45'	EL	21.982	
		TNAGRIT4	43.000	--	1.12	48.157	1.4	0.272	1.74	45'	EL	21.982	0.617	1.8	45'	EL	35.172	0.80	0.272	1.12	45'	EL	21.982	
		TNAGT5A	45.000	--	1.042	46.893	1.4	0.272	1.61	45'	EL	21.982	0.617	1.88	45'	EL	35.172	0.80	0.272	1.04	45'	EL	21.982	
		TNAGT5B	45.000	--	1.017	45.785	1.4	0.272	1.58	45'	EL	21.982	0.617	1.7	45'	EL	35.172	0.80	0.272	1.02	45'	EL	21.982	

LOAD FACTORS:

DESIGN LOAD RATING FACTORS	LIMIT STATE	γ_{DC}	γ_{DW}
	STRENGTH I	1.25	1.50
	SERVICE III	1.00	1.00

NOTES:

MINIMUM RATING FACTORS ARE BASED ON THE STRENGTH I AND SERVICE III LIMIT STATES.

ALLOWABLE STRESSES FOR SERVICE III LIMIT STATE ARE AS REQUIRED FOR DESIGN.

COMMENTS:

1.
2.
3.
4.

 # CONTROLLING LOAD RATING

1. DESIGN LOAD RATING (HL-93)
2. DESIGN LOAD RATING (HS-20)
3. LEGAL LOAD RATING **

** SEE CHART FOR VEHICLE TYPE

GIRDER LOCATION

I - INTERIOR GIRDER
EL - EXTERIOR LEFT GIRDER
ER - EXTERIOR RIGHT GIRDER

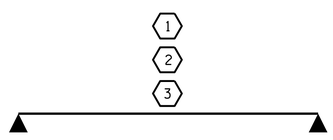

LRFR SUMMARY

FOR SPAN 'A'

PROJECT NO. 17BP.3.R.43
SAMPSON COUNTY
STATION: 15+68.00 -L-

NORTH CAROLINA PROFESSIONAL SEAL 21271 ENGINEER GREGORY W. DICKEY

DocuSigned by: Greg Dickey
2/13/2016

STATE OF NORTH CAROLINA
DEPARTMENT OF TRANSPORTATION
RALEIGH

STANDARD
LRFR SUMMARY FOR 45' CORED SLAB UNIT 75° SKEW
(NON-INTERSTATE TRAFFIC)

REVISIONS						SHEET NO.
NO.	BY:	DATE:	NO.	BY:	DATE:	S-3
1			3			TOTAL SHEETS
2			4			17

DOCUMENT NOT CONSIDERED FINAL UNLESS ALL SIGNATURES COMPLETED

ASSEMBLED BY : A.K. PATEL	DATE : 01/25/16
CHECKED BY : G.W. DICKEY	DATE : 02/08/16
DRAWN BY : CVC 6/10	
CHECKED BY : DNS 6/10	

15-FEB-2016 13:48
S:\DPG1\Division3\17BP3R43Sampson13\Final_Plans\17BP.3.R.43_SD_CS.dgn
gdickey

STD. NO. 21LRFR1_75&105S_45L

LOAD AND RESISTANCE FACTOR RATING (LRFD) SUMMARY FOR PRESTRESSED CONCRETE GIRDERS

LEVEL		VEHICLE	WEIGHT (W) (TONS)	CONTROLLING LOAD RATING	MINIMUM RATING FACTORS (RF)	TONS = W X RF	STRENGTH I LIMIT STATE											SERVICE III LIMIT STATE						COMMENT NUMBER
							LIVELOAD FACTORS	MOMENT					SHEAR					LIVELOAD FACTORS	MOMENT					
								DISTRIBUTION FACTORS (DF)	RATING FACTOR	SPAN	GIRDER LOCATION	DISTANCE FROM LEFT END OF SPAN (ft)	DISTRIBUTION FACTORS (DF)	RATING FACTOR	SPAN	GIRDER LOCATION	DISTANCE FROM LEFT END OF SPAN (ft)		DISTRIBUTION FACTORS (DF)	RATING FACTOR	SPAN	GIRDER LOCATION	DISTANCE FROM LEFT END OF SPAN (ft)	
DESIGN LOAD RATING		HL-93(Inv)	N/A	1	1.06	--	1.75	0.275	1.38	35'	EL	16.982	0.623	1.2	35'	EL	1.698	0.80	0.275	**1.06**	35'	EL	**16.982**	
		HL-93(Opr)	N/A	--	1.549	--	1.35	0.275	1.79	35'	EL	16.982	0.623	1.55	35'	EL	1.698	N/A	--	--	--	--	--	
		HS-20(Inv)	36.000	2	1.377	49.573	1.75	0.275	1.82	35'	EL	13.586	0.623	**1.38**	35'	EL	**1.698**	0.80	0.275	1.41	35'	EL	16.982	
		HS-20(Opr)	36.000	--	1.785	64.262	1.35	0.275	2.36	35'	EL	13.586	0.623	1.79	35'	EL	1.698	N/A	--	--	--	--	--	
LEGAL LOAD RATING	SV	SNSH	13.500	--	2.424	32.72	1.4	0.275	3.95	35'	EL	16.982	0.623	3.55	35'	EL	1.698	0.80	0.275	2.42	35'	EL	16.982	
		SNGARBS2	20.000	--	2.082	41.635	1.4	0.275	3.34	35'	EL	13.586	0.623	2.68	35'	EL	1.698	0.80	0.275	2.08	35'	EL	13.586	
		SNAGRIS2	22.000	--	2.076	45.668	1.4	0.275	3.31	35'	EL	13.586	0.623	2.56	35'	EL	1.698	0.80	0.275	2.08	35'	EL	13.586	
		SNCOTTS3	27.250	--	1.213	33.066	1.4	0.275	1.98	35'	EL	16.982	0.623	1.79	35'	EL	1.698	0.80	0.275	1.21	35'	EL	16.982	
		SNAGGRS4	34.925	--	1.123	39.207	1.4	0.275	1.83	35'	EL	16.982	0.623	1.6	35'	EL	1.698	0.80	0.275	1.12	35'	EL	16.982	
		SNS5A	35.550	--	1.09	38.739	1.4	0.275	1.77	35'	EL	16.982	0.623	1.69	35'	EL	1.698	0.80	0.275	1.09	35'	EL	16.982	
		SNS6A	39.950	--	1.052	42.014	1.4	0.275	1.71	35'	EL	16.982	0.623	1.58	35'	EL	1.698	0.80	0.275	1.05	35'	EL	16.982	
		SNS7B	42.000	3	1.004	42.153	1.4	0.275	1.63	35'	EL	16.982	0.623	1.62	35'	EL	1.698	0.80	0.275	**1.00**	35'	EL	**16.982**	
	TTST	TNAGRIT3	33.000	--	1.299	42.872	1.4	0.275	2.11	35'	EL	16.982	0.623	1.85	35'	EL	1.698	0.80	0.275	1.30	35'	EL	16.982	
		TNT4A	33.075	--	1.298	42.933	1.4	0.275	2.11	35'	EL	16.982	0.623	1.75	35'	EL	1.698	0.80	0.275	1.30	35'	EL	16.982	
		TNT6A	41.600	--	1.137	47.314	1.4	0.275	1.85	35'	EL	16.982	0.623	1.71	35'	EL	1.698	0.80	0.275	1.14	35'	EL	16.982	
		TNT7A	42.000	--	1.175	49.358	1.4	0.275	1.92	35'	EL	16.982	0.623	1.59	35'	EL	1.698	0.80	0.275	1.18	35'	EL	16.982	
		TNT7B	42.000	--	1.156	48.536	1.4	0.275	1.88	35'	EL	16.982	0.623	1.54	35'	EL	1.698	0.80	0.275	1.16	35'	EL	16.982	
		TNAGRIT4	43.000	--	1.17	50.308	1.4	0.275	1.89	35'	EL	13.586	0.623	1.48	35'	EL	1.698	0.80	0.275	1.17	35'	EL	16.982	
		TNAGT5A	45.000	--	1.079	48.572	1.4	0.275	1.76	35'	EL	16.982	0.623	1.56	35'	EL	1.698	0.80	0.275	1.08	35'	EL	16.982	
		TNAGT5B	45.000	--	1.041	46.853	1.4	0.275	1.69	35'	EL	16.982	0.623	1.4	35'	EL	1.698	0.80	0.275	1.04	35'	EL	16.982	

LOAD FACTORS:

DESIGN LOAD RATING FACTORS	LIMIT STATE	γ_{DC}	γ_{DW}
	STRENGTH I	1.25	1.50
	SERVICE III	1.00	1.00

NOTES:

MINIMUM RATING FACTORS ARE BASED ON THE STRENGTH I AND SERVICE III LIMIT STATES.

ALLOWABLE STRESSES FOR SERVICE III LIMIT STATE ARE AS REQUIRED FOR DESIGN.

COMMENTS:

1.
2.
3.
4.

(#) CONTROLLING LOAD RATING

(1) DESIGN LOAD RATING (HL-93)

(2) DESIGN LOAD RATING (HS-20)

(3) LEGAL LOAD RATING **

** SEE CHART FOR VEHICLE TYPE

GIRDER LOCATION

I - INTERIOR GIRDER
EL - EXTERIOR LEFT GIRDER
ER - EXTERIOR RIGHT GIRDER

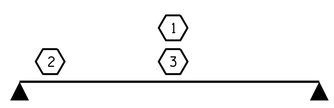

LRFR SUMMARY

FOR SPAN 'B'

PROJECT NO. 17BP.3.R.43

SAMPSON COUNTY

STATION: 15+68.00 -L-

NORTH CAROLINA PROFESSIONAL SEAL 21271 ENGINEER GREGORY W. DICKEY

DocuSigned by: Greg Dickey
2/15/2016

STATE OF NORTH CAROLINA
DEPARTMENT OF TRANSPORTATION
RALEIGH

STANDARD
LRFR SUMMARY FOR
35' CORED SLAB UNIT
75° SKEW
(NON-INTERSTATE TRAFFIC)

REVISIONS						SHEET NO.
NO.	BY:	DATE:	NO.	BY:	DATE:	S-4
1			3			TOTAL SHEETS
2			4			17

DOCUMENT NOT CONSIDERED FINAL UNLESS ALL SIGNATURES COMPLETED

ASSEMBLED BY :	A. K. PATEL	DATE :	01/25/16
CHECKED BY :	G. W. DICKEY	DATE :	02/08/16
DRAWN BY : CVC	6/10		
CHECKED BY : DNS	6/10		

15-FEB-2016 13:48
S:\DPG1\Division3\17BP3R43Sampson13\Final_Plans\17BP.3.R.43_SD_CS.dgn
gdickey

STD. NO. 21LRFR1_75&105S_35L

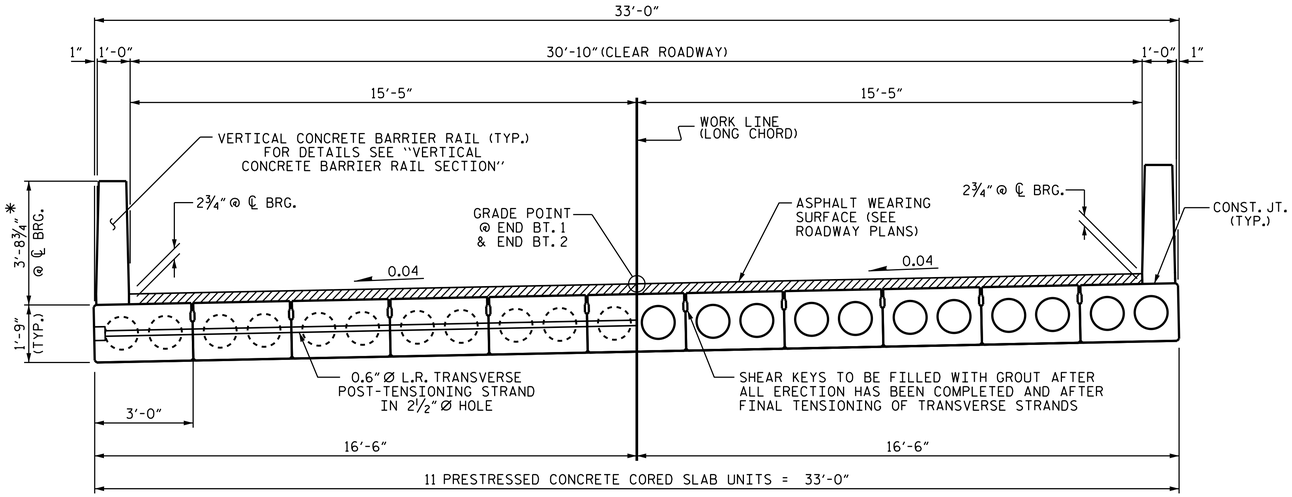

HALF SECTION
AT INTERMEDIATE DIAPHRAGMS

HALF SECTION
THROUGH VOIDS

TYPICAL SECTION

* - THE MAXIMUM BARRIER RAIL HEIGHT AND ASPHALT THICKNESS IS SHOWN. THE HEIGHT OF THE BARRIER RAIL AND ASPHALT THICKNESS VARIES WHILE THE TOP OF THE BARRIER RAIL FOLLOWS THE PROFILE OF THE GUTTERLINE. FOR RAIL HEIGHT DETAILS AND ASPHALT THICKNESS SEE THE "VERTICAL CONCRETE BARRIER RAIL SECTION" DETAIL, SHEET S-8.

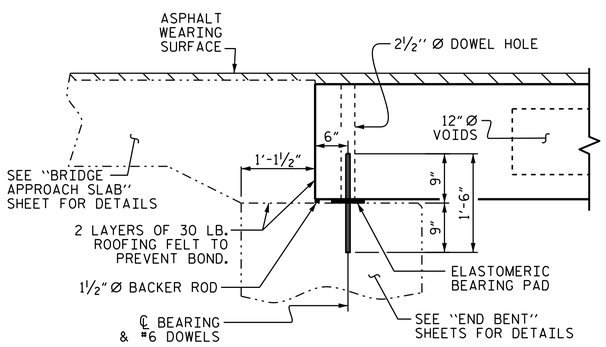

SECTION AT END BENT

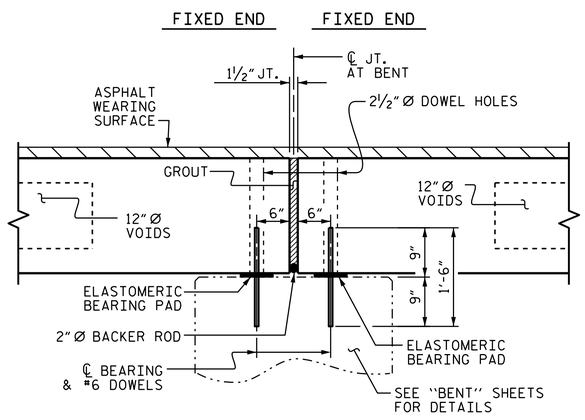

SECTION AT BENT

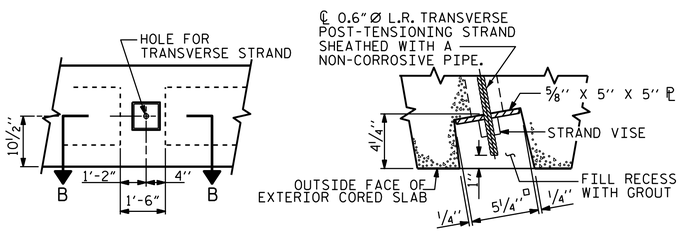

ELEVATION VIEW

SECTION B-B

GROUTED RECESS AT END OF POST-TENSIONED STRAND OF CORED SLABS

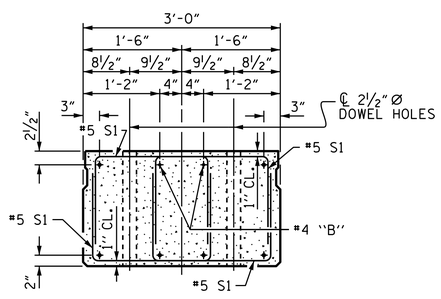

END ELEVATION

SHOWING PLACEMENT OF DOUBLE STIRRUPS AND LOCATION OF DOWEL HOLES. (STRAND LAYOUT NOT SHOWN.) INTERIOR SLAB UNIT SHOWN-EXTERIOR SLAB UNIT SIMILAR EXCEPT SHEAR KEY LOCATION.

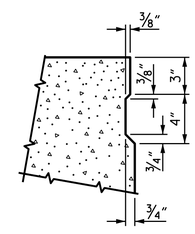

SHEAR KEY DETAIL

NOTE: OMIT SHEAR KEY ON OUTSIDE FACE OF EXTERIOR CORED SLABS.

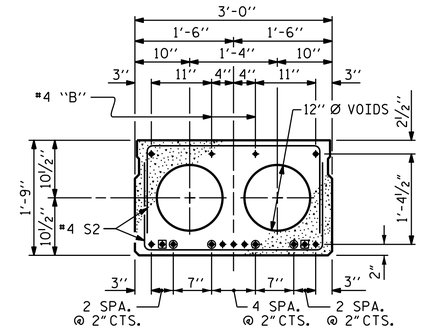

INTERIOR SLAB SECTION (35' UNIT)

(9 STRANDS REQUIRED)

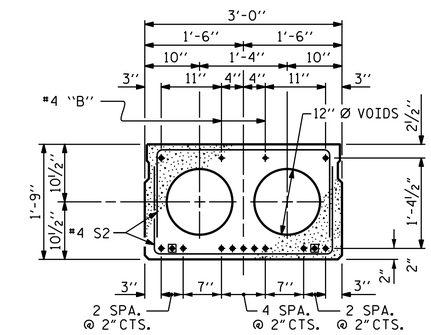

INTERIOR SLAB SECTION (45' UNIT)

(13 STRANDS REQUIRED)

0.6" Ø LOW RELAXATION STRAND LAYOUT

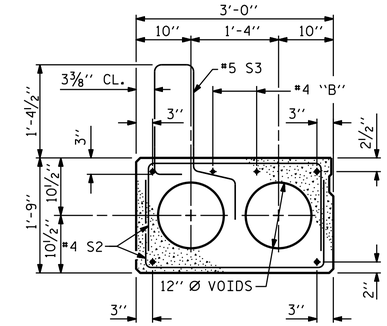

EXT. SLAB SECTION

(FOR PRESTRESSED STRAND LAYOUT, SEE INTERIOR SLAB SECTION.)

◘ BOND SHALL BE BROKEN ON THESE STRANDS FOR A DISTANCE OF 2'-0" FROM END OF CORED SLAB UNIT. SEE STANDARD SPECIFICATIONS, ARTICLE 1078-7.

◉ OPTIONAL FULL LENGTH DEBONDED STRANDS. THESE STRANDS ARE NOT REQUIRED. IF THE FABRICATOR CHOOSES TO INCLUDE THESE STRANDS IN THE CORED SLAB UNIT, THE STRANDS SHALL BE DEBONDED FOR THE FULL LENGTH OF THE UNIT AT NO ADDITIONAL COST. SEE STANDARD SPECIFICATIONS, ARTICLE 1078-7.

DEBONDING LEGEND

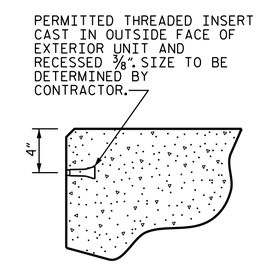

THREADED INSERT DETAIL

PROJECT NO. 17BP.3.R.43
SAMPSON COUNTY
STATION: 15+68.00 -L-

SHEET 1 OF 4

STATE OF NORTH CAROLINA
DEPARTMENT OF TRANSPORTATION
RALEIGH

STANDARD
3'-0" X 1'-9"
PRESTRESSED CONCRETE
CORED SLAB UNIT
75° SKEW

NORTH CAROLINA PROFESSIONAL SEAL 21271 ENGINEER GREGORY W. DICKEY

DocuSigned by: Greg Dickey
2/15/2016

ASSEMBLED BY : A. K. PATEL	DATE : 01/21/16
CHECKED BY : G. W. DICKEY	DATE : 02/08/16
DRAWN BY : DGE 5/09	REV. 9/14 MAA/TMG
CHECKED BY : BCH 6/09	

DOCUMENT NOT CONSIDERED FINAL UNLESS ALL SIGNATURES COMPLETED

REVISIONS						SHEET NO.
NO.	BY:	DATE:	NO.	BY:	DATE:	S-5
1			3			TOTAL SHEETS
2			4			17

15-FEB-2016 13:48
S:\DPGI\Division3\17BP3R43Samspon13\Final_Plans\17BP.3.R.43_SD_CS.dgn
gdickey

STD. NO. 21" PCS2_33_75S

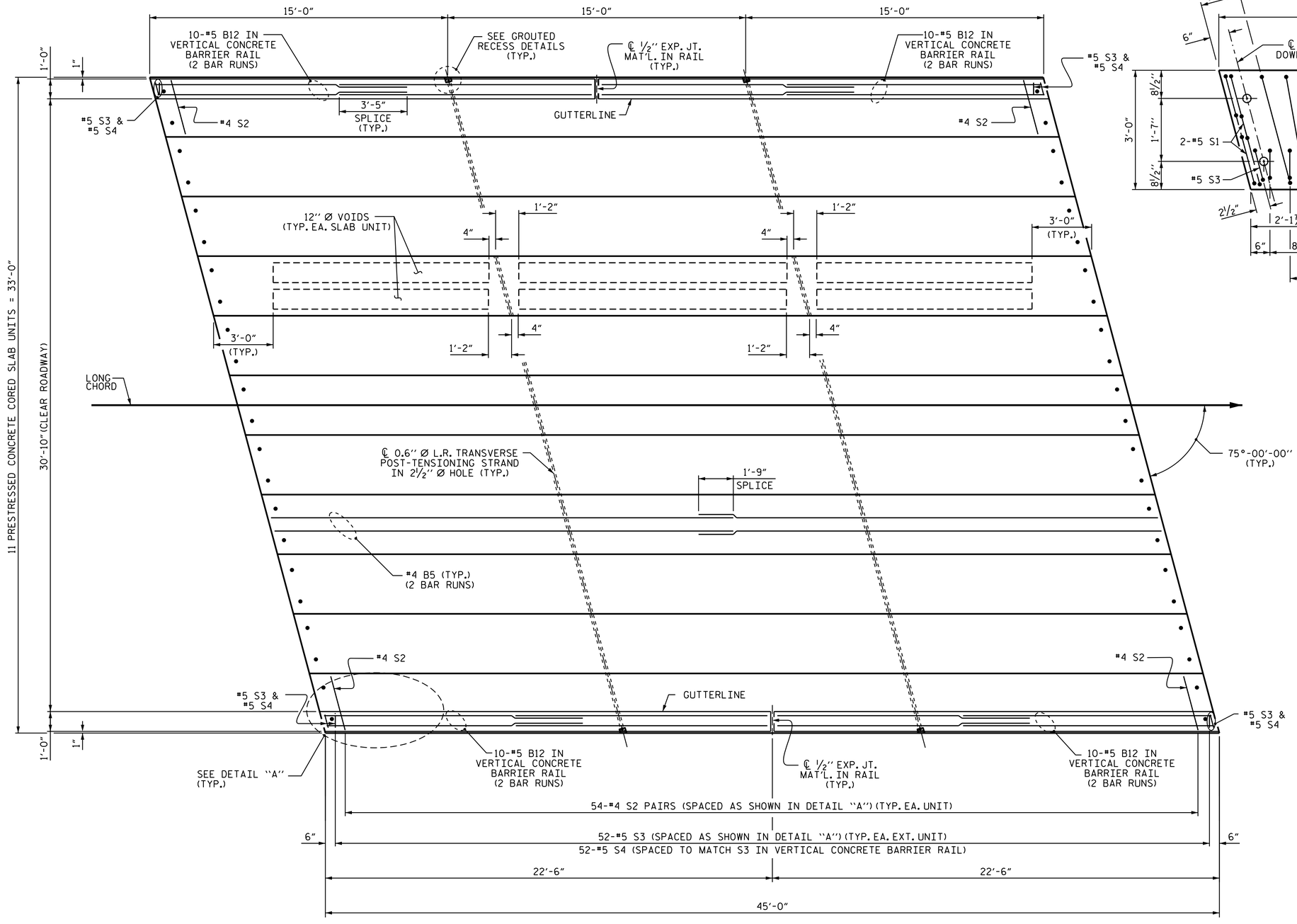

PLAN OF UNIT (SPAN A)

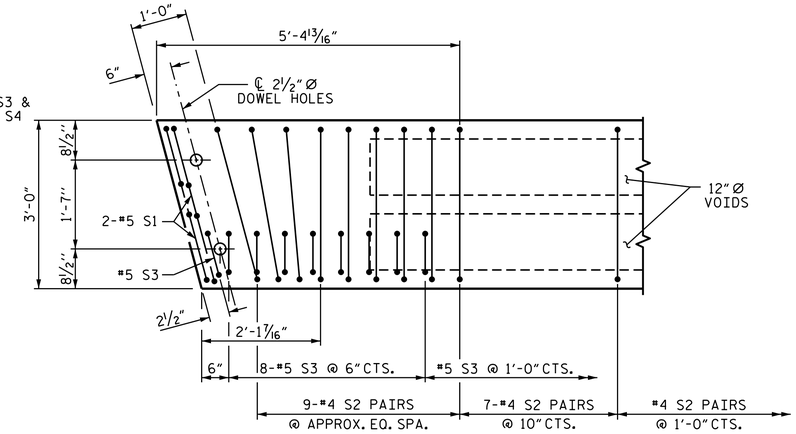

DETAIL "A"

(SIMILAR EACH END OF UNIT)
NOTE: EXTERIOR UNIT SHOWN - INTERIOR UNIT SIMILAR EXCEPT OMIT #5 S3 BARS.

PROJECT NO. 17BP.3.R.43
SAMPSON COUNTY
STATION: 15+68.00 -L-

SHEET 2 OF 4

STATE OF NORTH CAROLINA
DEPARTMENT OF TRANSPORTATION
RALEIGH

PLAN OF 45' UNIT 30'-10" CLEAR ROADWAY 75° SKEW

NORTH CAROLINA PROFESSIONAL SEAL 21271 ENGINEER GREGORY W. DICKEY

DocuSigned by: Greg Dickey
2/15/2016

DOCUMENT NOT CONSIDERED FINAL UNLESS ALL SIGNATURES COMPLETED

ASSEMBLED BY : A. K. PATEL		DATE : 01/21/16	
CHECKED BY : G. W. DICKEY		DATE : 02/08/16	
DRAWN BY : DGE 3/09	REV. 12/5/11	MAA/AAC	
CHECKED BY : BCH 3/09	REV. 8/14	MAA/TMG	

REVISIONS								SHEET NO.
NO.	BY:	DATE:	NO.	BY:	DATE:			S-6
1			3					TOTAL SHEETS
2			4					17

15-FEB-2016 13:48
S:\DPG\Division3\17BP3R43Sampson13\Final_Plans\17BP.3.R.43_SD_CS.dgn
gdickey

STD. NO. 21" PCS_33_75S_45L

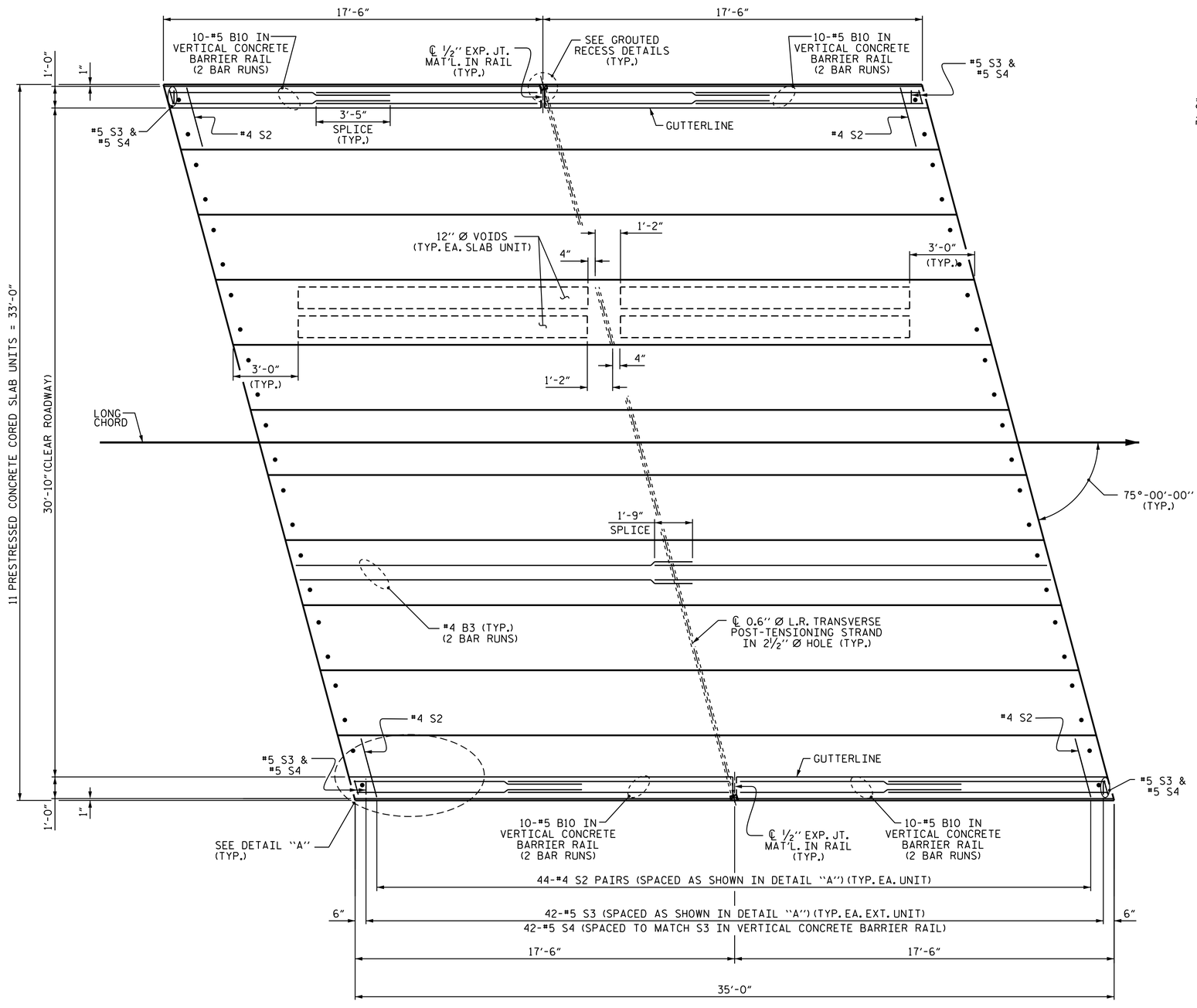

PLAN OF UNIT (SPAN B)

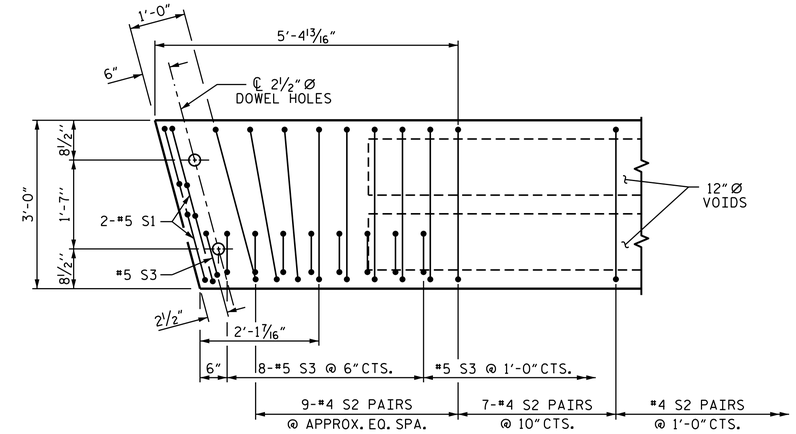

DETAIL "A"

(SIMILAR EACH END OF UNIT)
NOTE: EXTERIOR UNIT SHOWN - INTERIOR UNIT SIMILAR EXCEPT OMIT #5 S3 BARS.

PROJECT NO. 17BP.3.R.43
SAMPSON COUNTY
STATION: 15+68.00 -L-

SHEET 3 OF 4

STATE OF NORTH CAROLINA
DEPARTMENT OF TRANSPORTATION
RALEIGH

PLAN OF 35' UNIT 30'-10" CLEAR ROADWAY 75° SKEW

NORTH CAROLINA PROFESSIONAL SEAL 21271 ENGINEER GREGORY W. DICKEY

DocuSigned by: Greg Dickey
2/15/2016

DOCUMENT NOT CONSIDERED FINAL UNLESS ALL SIGNATURES COMPLETED

ASSEMBLED BY : A. K. PATEL		DATE : 01/21/16	
CHECKED BY : G. W. DICKEY		DATE : 02/08/16	
DRAWN BY : DGE 3/09	REV. 12/5/11	MAA/AAC	
CHECKED BY : BCH 3/09	REV. 8/14	MAA/TMG	

REVISIONS						SHEET NO.
NO.	BY:	DATE:	NO.	BY:	DATE:	S-7
1			3			TOTAL SHEETS
2			4			17

STD. NO. 21" PCS_33_75S_35L

15-FEB-2016 13:48
S:\DPG1\Division3\17BP3R43Sampson13\Final_Plans\17BP.3.R.43_SD_CS.dgn
gdickey

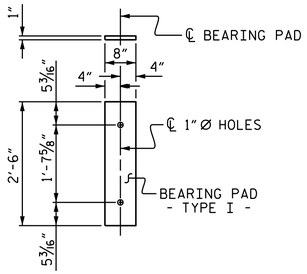

FIXED END
(TYPE I - 44 REQ'D)

ELASTOMERIC BEARING DETAILS

ELASTOMER IN ALL BEARINGS SHALL BE 50 DUROMETER HARDNESS.

CORED SLABS REQUIRED			
	NUMBER	LENGTH	TOTAL LENGTH
35' UNIT			
EXTERIOR C.S.	2	35'-0"	70'-0"
INTERIOR C.S.	9	35'-0"	315'-0"
TOTAL			

CORED SLABS REQUIRED			
	NUMBER	LENGTH	TOTAL LENGTH
45' UNIT			
EXTERIOR C.S.	2	45'-0"	90'-0"
INTERIOR C.S.	9	45'-0"	405'-0"
TOTAL			

BILL OF MATERIAL FOR ONE 35' CORED SLAB UNIT

				EXTERIOR UNIT		INTERIOR UNIT	
BAR	NUMBER	SIZE	TYPE	LENGTH	WEIGHT	LENGTH	WEIGHT
B3	4	#4	STR	18'-3"	49	18'-3"	49
S1	8	#5	3	4'-3"	35	4'-3"	35
S2	88	#4	3	5'-4"	314	5'-4"	314
✱ S3	44	#5	1	5'-7"	256		
REINFORCING STEEL			LBS.		398		398
✱ EPOXY COATED REINFORCING STEEL			LBS.		256		
5000 P.S.I. CONCRETE			CU. YDS.		5.2		5.2
0.6" Ø L.R. STRANDS			No.		9		9

BILL OF MATERIAL FOR ONE 45' CORED SLAB UNIT

				EXTERIOR UNIT		INTERIOR UNIT	
BAR	NUMBER	SIZE	TYPE	LENGTH	WEIGHT	LENGTH	WEIGHT
B5	4	#4	STR	23'-3"	62	23'-3"	62
S1	8	#5	3	4'-3"	35	4'-3"	35
S2	108	#4	3	5'-4"	385	5'-4"	385
✱ S3	54	#5	1	5'-7"	314		
REINFORCING STEEL			LBS.		482		482
✱ EPOXY COATED REINFORCING STEEL			LBS.		314		
5000 P.S.I. CONCRETE			CU. YDS.		6.6		6.6
0.6" Ø L.R. STRANDS			No.		13		13

BAR TYPES

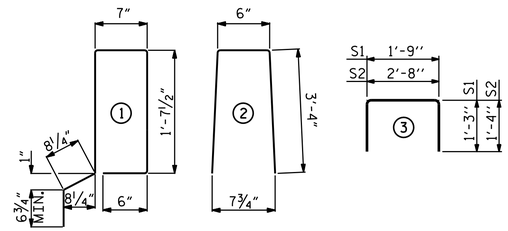

ALL BAR DIMENSIONS ARE OUT TO OUT

DEAD LOAD DEFLECTION AND CAMBER

	3'-0" x 1'-9"
35' CORED SLAB UNIT	0.6" Ø L.R. STRAND
CAMBER (SLAB ALONE IN PLACE)	1/4" ↑
DEFLECTION DUE TO SUPERIMPOSED DEAD LOAD✱✱	1/8" ↓
FINAL CAMBER	1/8" ↑

✱✱ INCLUDES FUTURE WEARING SURFACE

GUTTERLINE ASPHALT THICKNESS & RAIL HEIGHT

	ASPHALT OVERLAY THICKNESS	RAIL HEIGHT
	@ MID-SPAN	@ MID-SPAN
35' UNITS	2 5/8"	3'-8 5/8"
45' UNITS	2"	3'-8"

BILL OF MATERIAL FOR VERTICAL CONCRETE BARRIER RAIL

BAR	BARS PER PAIR OF EXTERIOR UNITS	TOTAL NO.	SIZE	TYPE	LENGTH	WEIGHT
	35' UNIT					
✱ B10	80	80	#5	STR	10'-5"	869
✱ S4	88	88	#5	2	7'-2"	658
✱ EPOXY COATED REINFORCING STEEL				LBS.		1527
CLASS AA CONCRETE				CU.YDS.		9.0
TOTAL VERTICAL CONCRETE BARRIER RAIL				LN. FT.		70.25

BILL OF MATERIAL FOR VERTICAL CONCRETE BARRIER RAIL

BAR	BARS PER PAIR OF EXTERIOR UNITS	TOTAL NO.	SIZE	TYPE	LENGTH	WEIGHT
	45' UNIT					
✱ B12	80	80	#5	STR	12'-11"	1078
✱ S4	108	108	#5	2	7'-2"	807
✱ EPOXY COATED REINFORCING STEEL				LBS.		1885
CLASS AA CONCRETE				CU.YDS.		11.5
TOTAL VERTICAL CONCRETE BARRIER RAIL				LN. FT.		90.25

NOTES

ALL PRESTRESSING STRANDS SHALL BE 7-WIRE LOW RELAXATION GRADE 270 STRANDS AND SHALL CONFORM TO AASHTO M203 EXCEPT FOR SAMPLING REQUIREMENTS WHICH SHALL BE IN ACCORDANCE WITH THE STANDARD SPECIFICATIONS.

ALL REINFORCING STEEL CAST WITH THE CORED SLAB SECTIONS SHALL BE GRADE 60 AND SHALL BE INCLUDED IN THE UNIT PRICE BID FOR PRESTRESSED CONCRETE CORED SLABS.

RECESSES FOR TRANSVERSE STRANDS SHALL BE GROUTED AFTER THE TENSIONING OF THE STRANDS.

THE 2 1/2" Ø DOWEL HOLES AT FIXED ENDS OF SLAB SECTIONS SHALL BE FILLED WITH NON-SHRINK GROUT.

THE BACKER RODS SHALL CONFORM TO THE REQUIREMENTS OF TYPE M BOND BREAKER. SEE SECTION 1028 OF THE STANDARD SPECIFICATIONS.

WHEN CORED SLABS ARE CAST, AN INTERNAL HOLD-DOWN SYSTEM SHALL BE EMPLOYED TO PREVENT VOIDS FROM RISING OR MOVING SIDEWAYS. AT LEAST SIX WEEKS PRIOR TO CASTING CORED SLABS, THE CONTRACTOR SHALL SUBMIT TO THE ENGINEER FOR REVIEW AND COMMENT, DETAILED DRAWINGS OF THE PROPOSED HOLD-DOWN SYSTEM. IN ADDITION TO STRUCTURAL DETAILS, LOCATION AND SPACING OF THE HOLD-DOWNS SHALL BE INDICATED.

ALL REINFORCING STEEL IN THE VERTICAL CONCRETE BARRIER RAIL SHALL BE EPOXY COATED.

PRESTRESSING STRANDS SHALL BE CUT FLUSH WITH THE CORED SLAB UNIT ENDS.

APPLY EPOXY PROTECTIVE COATING TO CORED SLAB UNIT ENDS.

GROOVED CONTRACTION JOINTS, 1/2" IN DEPTH, SHALL BE TOOLED IN ALL EXPOSED FACES OF THE BARRIER RAIL AND IN ACCORDANCE WITH ARTICLE 825-10(B) OF THE STANDARD SPECIFICATIONS. A CONTRACTION JOINT SHALL BE LOCATED AT EACH THIRD POINT BETWEEN BARRIER RAIL EXPANSION JOINTS. ONLY ONE CONTRACTION JOINT IS REQUIRED AT MIDPOINT OF BARRIER RAIL SEGMENTS LESS THAN 20 FEET IN LENGTH AND NO CONTRACTION JOINTS ARE REQUIRED FOR THOSE SEGMENTS LESS THAN 10 FEET IN LENGTH.

FLAME CUTTING OF THE TRANSVERSE POST-TENSIONING STRAND IS NOT ALLOWED.

THE TRANSFER OF LOAD FROM THE ANCHORAGES TO THE CORED SLAB UNIT SHALL BE DONE WHEN THE CONCRETE HAS REACHED A COMPRESSIVE STRENGTH OF NOT LESS THAN THE REQUIRED STRENGTH SHOWN IN THE "CONCRETE RELEASE STRENGTH" TABLE.

FOR GROUT FOR STRUCTURES, SEE SPECIAL PROVISIONS.

THE PERMITTED THREADED INSERTS ARE DETAILED AS AN OPTION FOR THE CONTRACTOR TO ATTACH FALSEWORK AND FORMWORK DURING CONSTRUCTION.

THE PERMITTED THREADED INSERTS IN THE EXTERIOR UNITS SHALL BE SIZED BY THE CONTRACTOR, SPACED AT 4'-0" CENTERS AND GALVANIZED IN ACCORDANCE WITH SECTION 1076 OF THE STANDARD SPECIFICATIONS. STAINLESS STEEL THREADED INSERTS MAY BE USED AS AN ALTERNATE.

THE PERMITTED THREADED INSERTS SHALL BE GROUTED BY THE CONTRACTOR IMMEDIATELY FOLLOWING REMOVAL OF THE FALSEWORK.

THE COST OF THE PERMITTED THREADED INSERTS SHALL BE INCLUDED IN THE PRICE BID FOR THE PRECAST UNITS.

CONCRETE RELEASE STRENGTH

UNIT	PSI
35' UNITS	4000
45' UNITS	4000

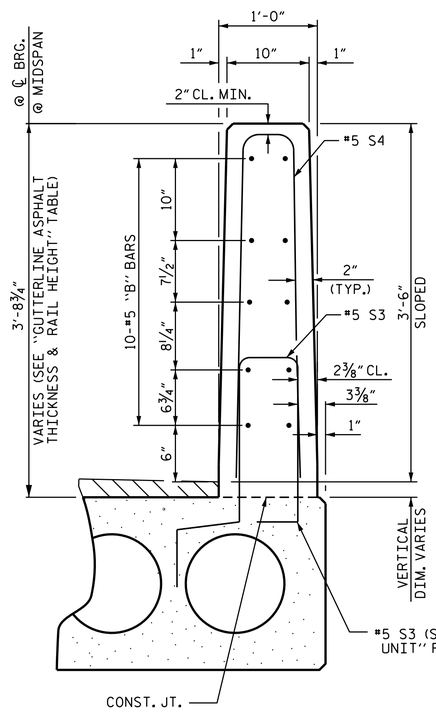

VERTICAL CONCRETE BARRIER RAIL SECTION

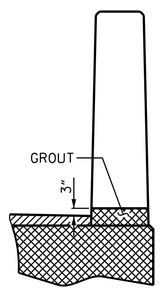

SECTION T-T
AT OPEN JOINT AT BENT
(THIS IS TO BE USED WHERE FOAM JOINT IS NOT USED)

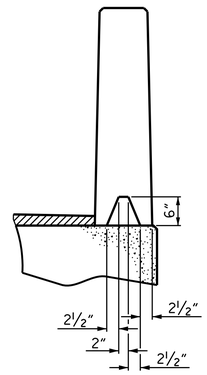

SECTION S-S
AT DAM IN OPEN JOINT
(THIS IS TO BE USED ONLY WHEN SLIP FORM IS USED)

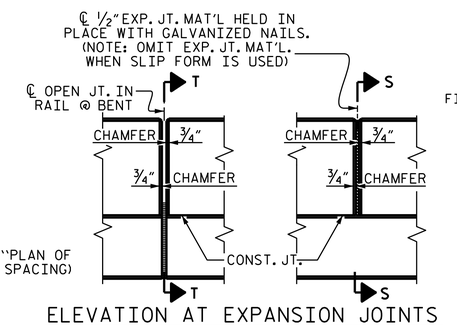

ELEVATION AT EXPANSION JOINTS

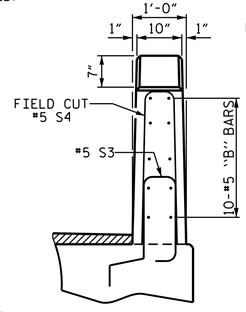

END VIEW

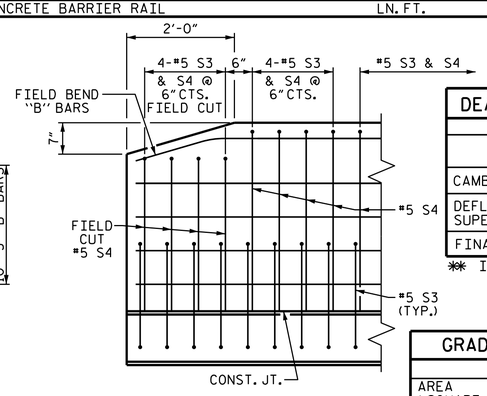

SIDE VIEW

END OF RAIL DETAILS

DEAD LOAD DEFLECTION AND CAMBER

	3'-0" x 1'-9"
45' CORED SLAB UNIT	0.6" Ø L.R. STRAND
CAMBER (SLAB ALONE IN PLACE)	7/8" ↑
DEFLECTION DUE TO SUPERIMPOSED DEAD LOAD✱✱	1/8" ↓
FINAL CAMBER	3/4" ↑

✱✱ INCLUDES FUTURE WEARING SURFACE

GRADE 270 STRANDS

	0.6" Ø L.R.
AREA (SQUARE INCHES)	0.217
ULTIMATE STRENGTH (LBS. PER STRAND)	58,600
APPLIED PRESTRESS (LBS. PER STRAND)	43,950

NORTH CAROLINA PROFESSIONAL SEAL 21271 ENGINEER GREGORY W. DICKEY

DocuSigned by: Greg Dickey 884E4888CE5B4B6... 2/15/2016

DOCUMENT NOT CONSIDERED FINAL UNLESS ALL SIGNATURES COMPLETED

PROJECT NO. 17BP.3.R.43
SAMPSON COUNTY
STATION: 15+68.00 -L-

SHEET 4 OF 4

STATE OF NORTH CAROLINA
DEPARTMENT OF TRANSPORTATION
RALEIGH

STANDARD
3'-0" X 1'-9"
PRESTRESSED CONCRETE
CORED SLAB UNIT
75° SKEW

REVISIONS								SHEET NO.
NO.	BY:	DATE:	NO.	BY:	DATE:			S-8
1			3					TOTAL SHEETS
2			4					17

ASSEMBLED BY : A. K. PATEL	DATE : 01/21/16
CHECKED BY : G. W. DICKEY	DATE : 02/08/16
DRAWN BY : DGE 5/09	REV. 11/14 MAA/TMG
CHECKED BY : BCH 6/09	

15-FEB-2016 13:48
S:\DPGI\Division3\17BP3R43Sampson13\Final_Plans\17BP.3.R.43_SD_CS.dgn
gdickey

STD. NO. 21" PCS3_33_75S

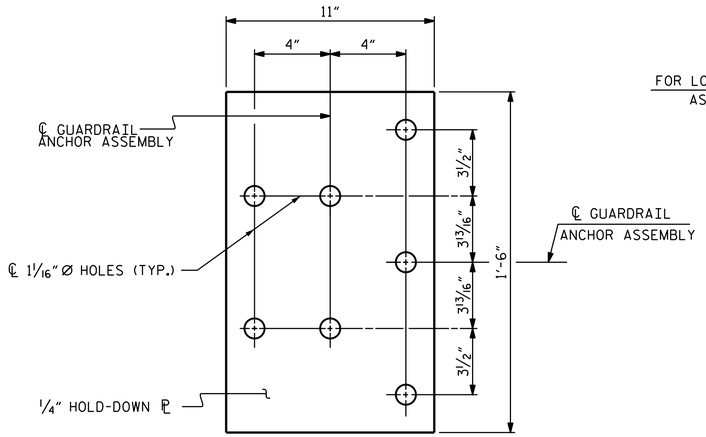

PLAN

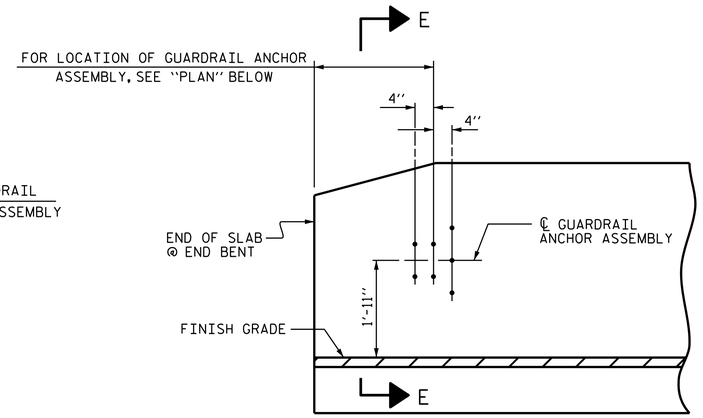

ELEVATION

NOTES

THE GUARDRAIL ANCHOR ASSEMBLY SHALL CONSIST OF A 1/4" HOLD DOWN PLATE AND 7 - 7/8" Ø BOLTS WITH NUTS AND WASHERS.

THE HOLD-DOWN PLATE SHALL CONFORM TO AASHTO M270 GRADE 36. AFTER FABRICATION, THE HOLD-DOWN PLATE SHALL BE HOT-DIP GALVANIZED IN ACCORDANCE WITH AASHTO M111.

BOLTS SHALL CONFORM TO THE REQUIREMENTS OF ASTM A307 AND NUTS SHALL CONFORM TO THE REQUIREMENTS OF AASHTO M291. BOLTS, NUTS AND WASHERS SHALL BE GALVANIZED. (AT THE CONTRACTOR'S OPTION, STAINLESS STEEL BOLTS, NUTS AND WASHERS MAY BE USED AS AN ALTERNATE FOR THE 7/8" Ø GALVANIZED BOLTS, NUTS AND WASHERS. THEY SHALL CONFORM TO OR EXCEED THE MECHANICAL REQUIREMENTS OF ASTM A307. THE USE OF THIS ALTERNATE SHALL BE APPROVED BY THE ENGINEER.)

THE GUARDRAIL ANCHOR ASSEMBLY IS REQUIRED AT ALL POINTS WHERE APPROACH GUARDRAIL IS TO BE ATTACHED TO THE END OF BARRIER RAIL. FOR POINTS OF ATTACHMENT, SEE SKETCH.

AFTER INSTALLATION, THE EXPOSED THREAD OF THE BOLT SHALL BE BURRED WITH A SHARP POINTED TOOL.

THE COST OF THE GUARDRAIL ANCHOR ASSEMBLY SHALL BE INCLUDED IN THE UNIT CONTRACT PRICE BID FOR VERTICAL CONCRETE BARRIER RAIL.

THE VERTICAL REINFORCING BARS MAY BE SHIFTED SLIGHTLY IN THE VERTICAL CONCRETE BARRIER RAIL TO CLEAR ASSEMBLY BOLTS.

THE 1 1/4" Ø HOLES SHALL BE FORMED OR DRILLED WITH A CORE BIT. IMPACT TOOLS WILL NOT BE PERMITTED. ANY CONCRETE DAMAGED BY THIS WORK SHALL BE REPAIRED TO THE SATISFACTION OF THE ENGINEER.

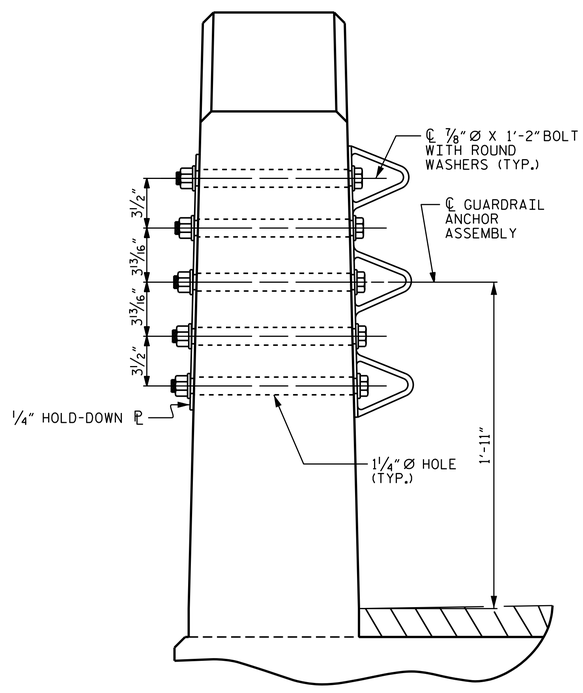

SECTION E-E

GUARDRAIL ANCHOR ASSEMBLY DETAILS

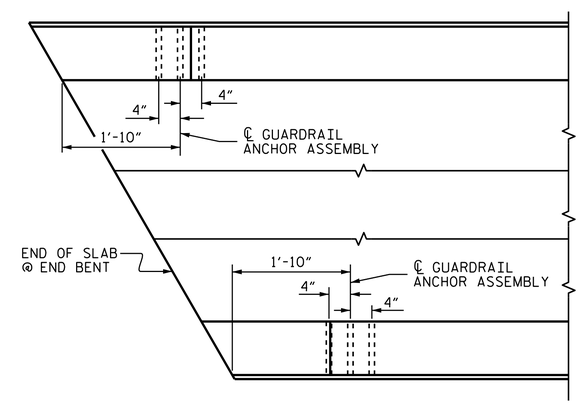

PLAN

LOCATION OF ANCHORS FOR GUARDRAIL

END BENT #1 SHOWN, END BENT #2 SIMILAR.

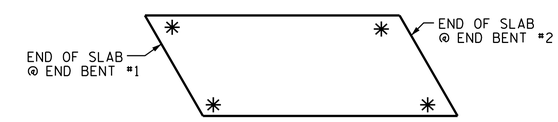

SKETCH SHOWING POINTS OF ATTACHMENT

✳ DENOTES GUARDRAIL ANCHOR ASSEMBLY

PROJECT NO. 17BP.3.R.43
SAMPSON COUNTY
STATION: 15+68.00 -L-

NORTH CAROLINA PROFESSIONAL SEAL 21271 ENGINEER GREGORY W. DICKEY

DocuSigned by: Greg Dickey
2/15/2016

STATE OF NORTH CAROLINA
DEPARTMENT OF TRANSPORTATION
RALEIGH

STANDARD
GUARDRAIL ANCHORAGE DETAILS FOR VERTICAL CONCRETE BARRIER RAIL

ASSEMBLED BY : A. K. PATEL	DATE : 01/21/16
CHECKED BY : G. W. DICKEY	DATE : 02/08/16
DRAWN BY : MAA 5/10	REV. 12/5/11 MAA/GM
CHECKED BY : GM 5/10	REV. 6/13 MAA/GM
	REV. 1/15 MAA/TMG

DOCUMENT NOT CONSIDERED FINAL UNLESS ALL SIGNATURES COMPLETED

REVISIONS						
NO.	BY:	DATE:	NO.	BY:	DATE:	
1			3			
2			4			

SHEET NO. S-9
TOTAL SHEETS 17

STD. NO. GRA3

15-FEB-2016 13:48
S:\DPGI\Division3\17BP3R43Samspon13\Final_Plans\17BP.3.R.43_SD_CS.dgn
gdickey

NOTES

STIRRUPS IN CAP MAY BE SHIFTED AS NECESSARY TO CLEAR DOWELS.

THE CONCRETE IN THE SHADED AREA OF THE WING SHALL BE POURED AFTER THE VERTICAL CONCRETE BARRIER RAIL IS CAST IF SLIP FORMING IS USED.

FOR PILE SPLICE DETAILS, SEE SHEET 4 OF 4.

FOR WING DETAILS, SEE SHEET 3 OF 4.

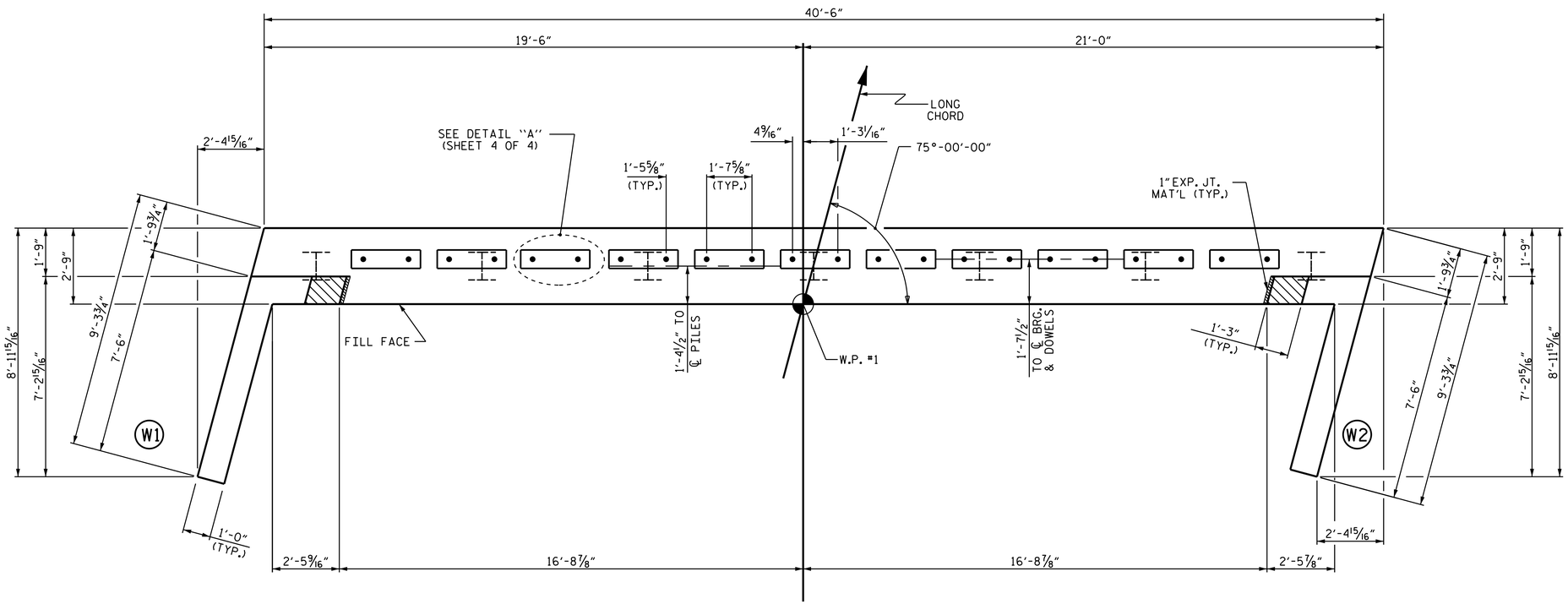

PLAN

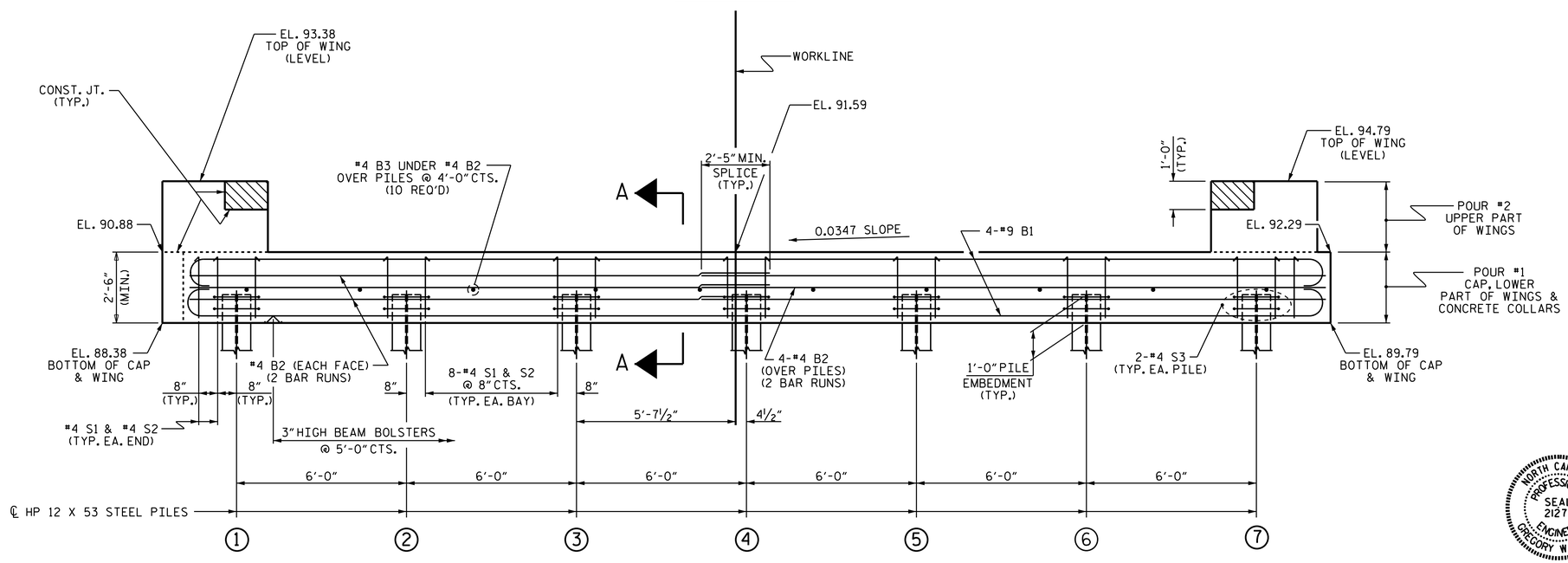

ELEVATION

WINGS NOT SHOWN FOR CLARITY.
FOR SECTION A-A, SEE SHEET 4 OF 4.
CONCRETE COLLARS FOR STEEL PILES NOT SHOWN IN PLAN AND ELEVATION VIEWS FOR CLARITY.
SEE "CORROSION PROTECTION FOR STEEL PILES DETAIL", SHEET 4 OF 4.

TOP OF PILE ELEVATIONS	
1	89.49
2	89.70
3	89.90
4	90.11
5	90.32
6	90.53
7	90.74

0.0347 SLOPE

PROJECT NO. 17BP.3.R.43
SAMPSON COUNTY
STATION: 15+68.00 -L-

SHEET 1 OF 4

STATE OF NORTH CAROLINA
DEPARTMENT OF TRANSPORTATION
RALEIGH

SUBSTRUCTURE
END BENT No. 1

NORTH CAROLINA PROFESSIONAL SEAL 21271 ENGINEER GREGORY W. DICKEY

DocuSigned by: Greg Dickey
2/15/2016

DOCUMENT NOT CONSIDERED FINAL UNLESS ALL SIGNATURES COMPLETED

REVISIONS						SHEET NO.
NO.	BY:	DATE:	NO.	BY:	DATE:	S-10
1			3			TOTAL SHEETS
2			4			17

ASSEMBLED BY : A. K. PATEL	DATE : 1/25/16
CHECKED BY : G. W. DICKEY	DATE : 2/08/16
DRAWN BY : DGE 01/10	REV. 4/15 MAA/TMG
CHECKED BY : MKT 01/10	

15-FEB-2016 13:48
S:\OPGI\Division3\17BP3R43Sampson13\Final_Plans\17BP.3.R.43_SD_CS.dgn
gdickey

STD. NO. EB_33_75S

NOTES

STIRRUPS IN CAP MAY BE SHIFTED AS NECESSARY TO CLEAR DOWELS.

THE CONCRETE IN THE SHADED AREA OF THE WING SHALL BE POURED AFTER THE VERTICAL CONCRETE BARRIER RAIL IS CAST IF SLIP FORMING IS USED.

FOR PILE SPLICE DETAILS, SEE SHEET 4 OF 4.

FOR WING DETAILS, SEE SHEET 3 OF 4.

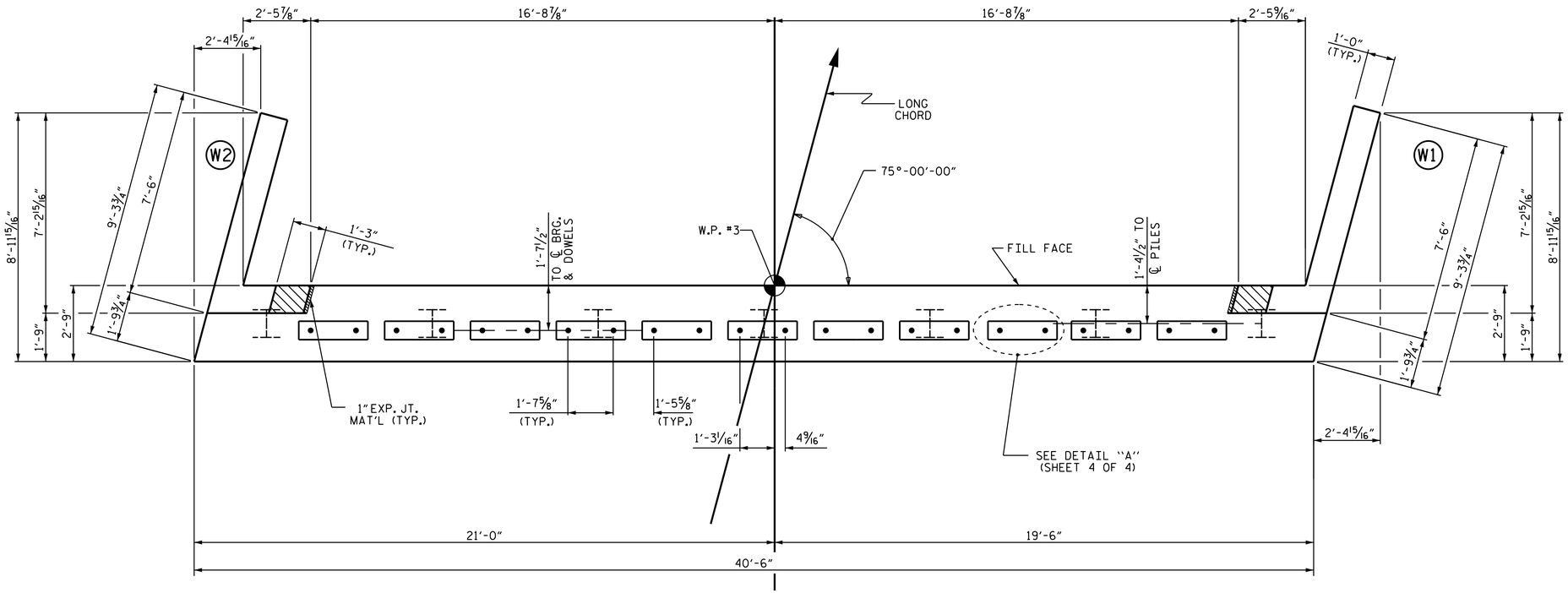

PLAN

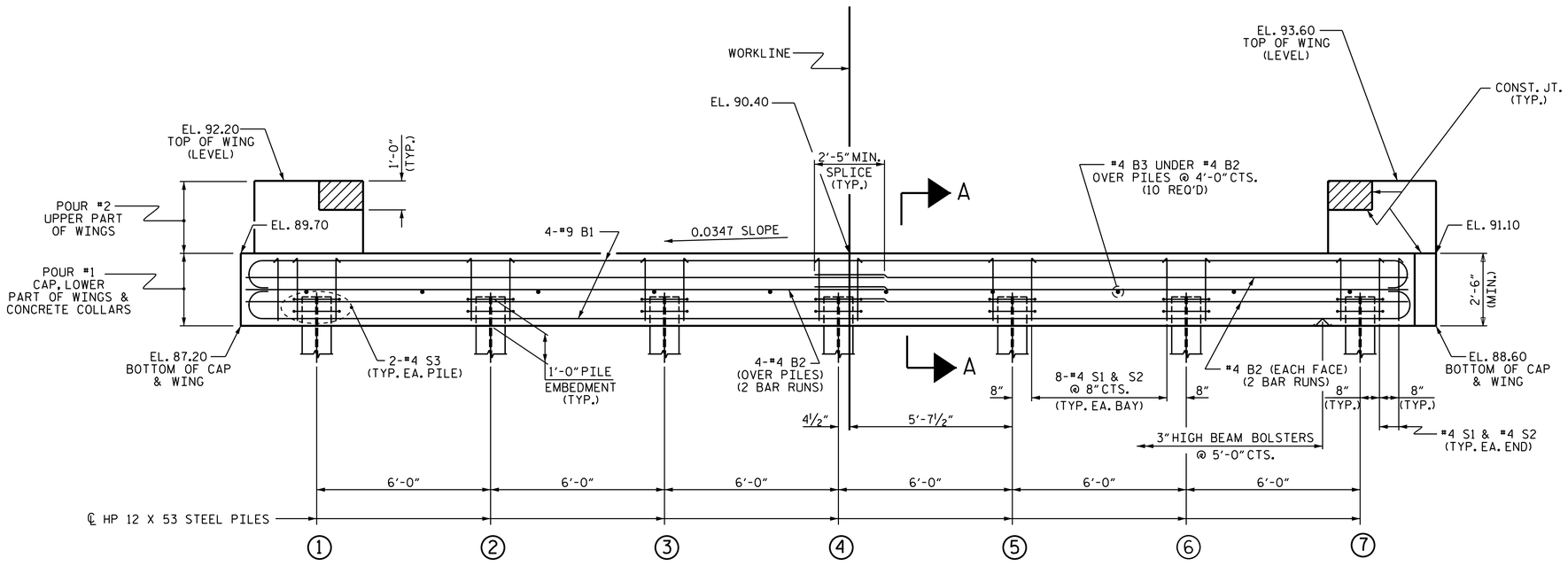

ELEVATION

WINGS NOT SHOWN FOR CLARITY.
FOR SECTION A-A, SEE SHEET 4 OF 4.
CONCRETE COLLARS FOR STEEL PILES NOT SHOWN IN PLAN AND ELEVATION VIEWS FOR CLARITY.
SEE "CORROSION PROTECTION FOR STEEL PILES DETAIL", SHEET 4 OF 4.

TOP OF PILE ELEVATIONS	
1	88.31
2	88.52
3	88.72
4	88.93
5	89.14
6	89.35
7	89.56

0.0347 SLOPE

PROJECT NO. 17BP.3.R.43
SAMPSON COUNTY
STATION: 15+68.00 -L-

SHEET 2 OF 4

STATE OF NORTH CAROLINA
DEPARTMENT OF TRANSPORTATION
RALEIGH

SUBSTRUCTURE
END BENT No. 2

NORTH CAROLINA PROFESSIONAL SEAL 21271 ENGINEER GREGORY W. DICKEY

DocuSigned by: Greg Dickey
2/15/2016

DOCUMENT NOT CONSIDERED FINAL UNLESS ALL SIGNATURES COMPLETED

REVISIONS							
NO.	BY:	DATE:	NO.	BY:	DATE:	SHEET NO.	S-11
1			3			TOTAL SHEETS	17
2			4				

ASSEMBLED BY : A. K. PATEL		DATE : 1/25/16
CHECKED BY : G. W. DICKEY		DATE : 2/08/16
DRAWN BY : DGE	01/10	REV. 4/15 MAA/TMG
CHECKED BY : MKT	01/10	

15-FEB-2016 13:48
S:\DPG1\Division3\17BP3R43Sampson13\Final_Plans\17BP.3.R.43_SD_CS.dgn
gdickey

STD. NO. EB_33_75S

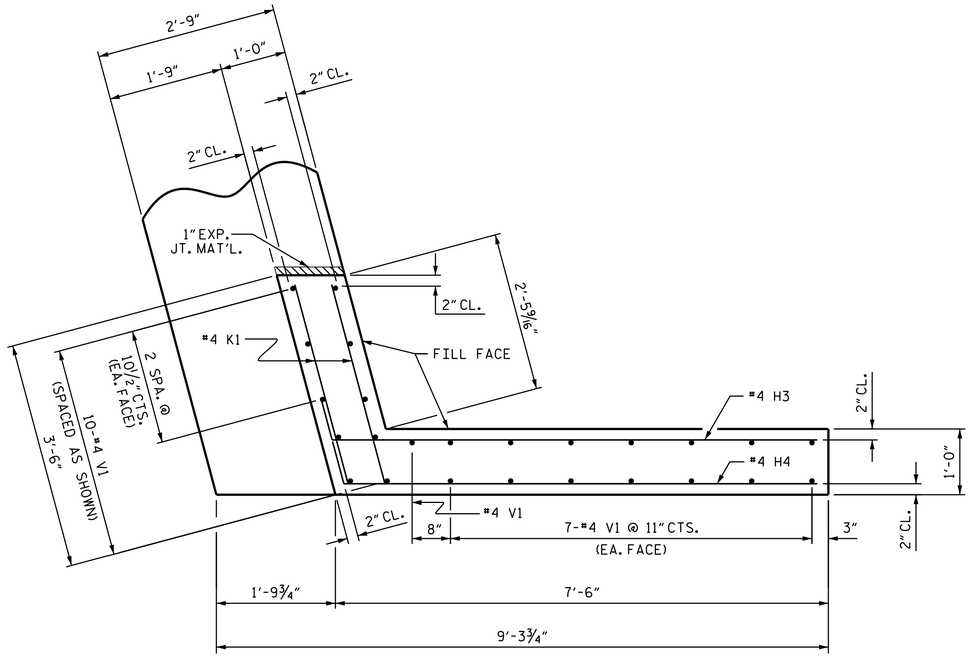

PLAN OF WING (W1)

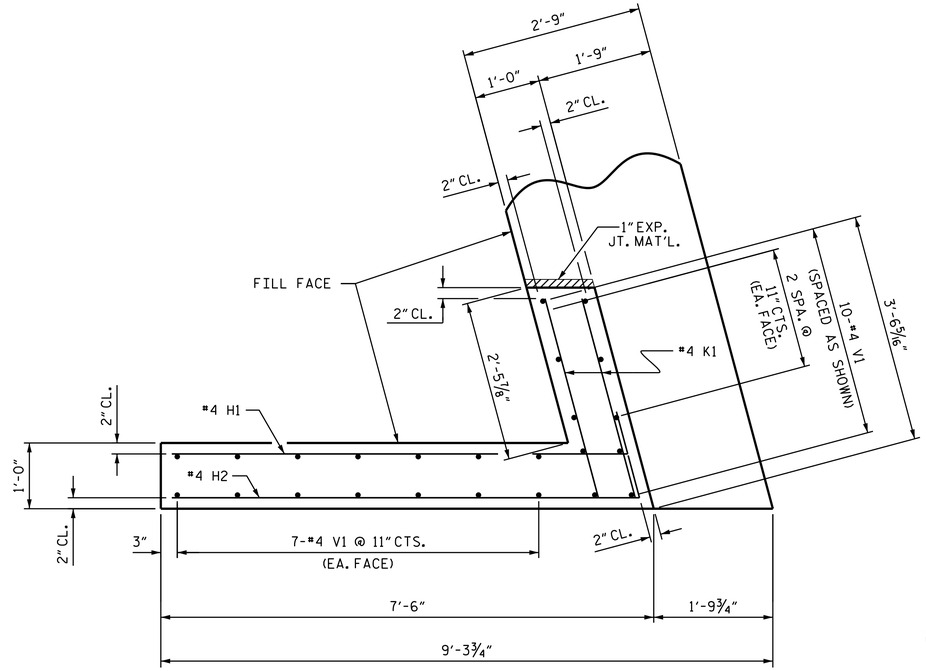

PLAN OF WING (W2)

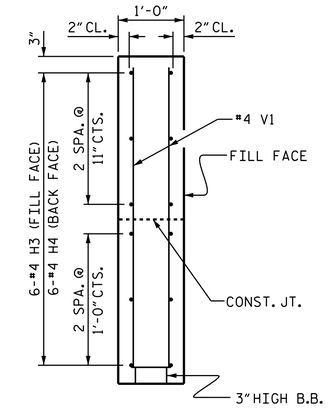

SECTION X-X

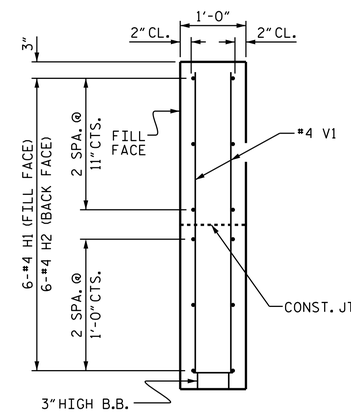

SECTION Y-Y

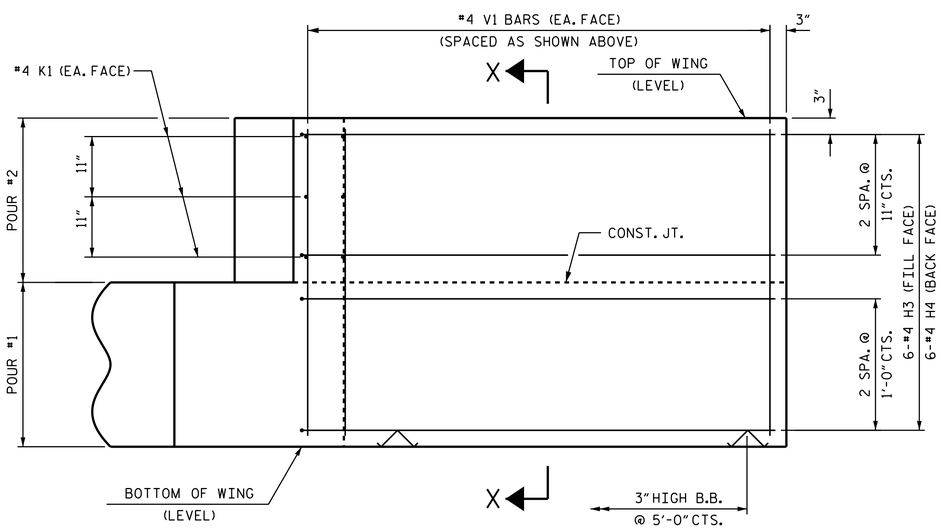

ELEVATION OF WING (W1)

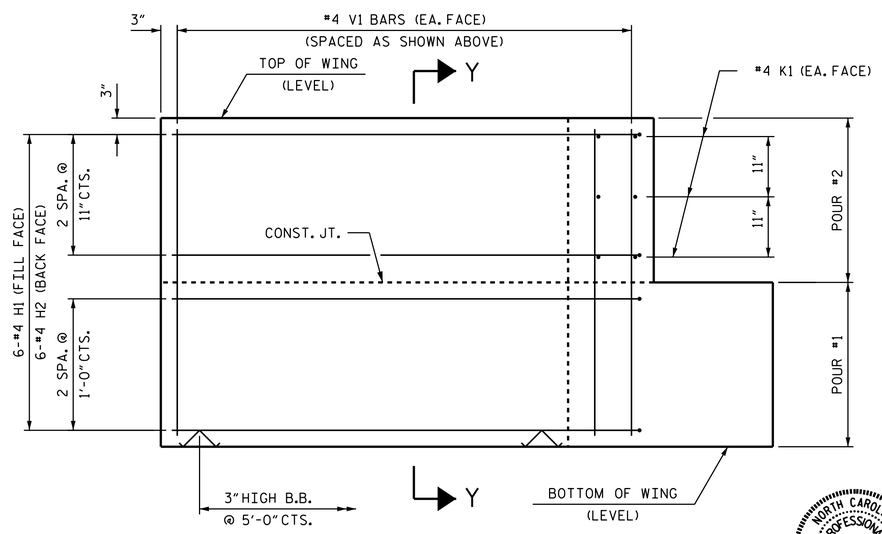

ELEVATION OF WING (W2)

WING DETAILS

PROJECT NO. 17BP.3.R.43
SAMPSON COUNTY
STATION: 15+68.00 -L-

SHEET 3 OF 4

NORTH CAROLINA PROFESSIONAL SEAL 21271 ENGINEER GREGORY W. DICKEY

DocuSigned by: Greg Dickey
2/15/2016

STATE OF NORTH CAROLINA
DEPARTMENT OF TRANSPORTATION
RALEIGH

SUBSTRUCTURE
END BENT
WING DETAILS

ASSEMBLED BY : A. K. PATEL	DATE :01/25/16
CHECKED BY : G. W. DICKEY	DATE :02/08/16
DRAWN BY : DGE 03/10	REV. 4/15 MAA/TMG
CHECKED BY : MKT 03/10	

DOCUMENT NOT CONSIDERED FINAL UNLESS ALL SIGNATURES COMPLETED

REVISIONS							
NO.	BY:	DATE:	NO.	BY:	DATE:	SHEET NO.	S-12
1			3			TOTAL SHEETS	17
2			4				

15-FEB-2016 13:48
S:\DPG1\Division3\17BP3R43Sampson13\Final_Plans\17BP.3.R.43_SD_CS.dgn
gdickey

STD. NO. EB_33_75S

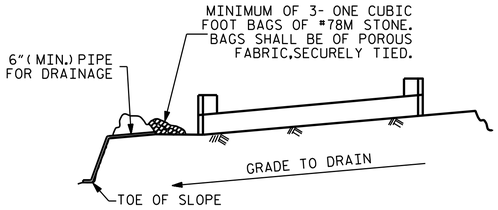

BAGGED STONE AND PIPE SHALL BE PLACED IMMEDIATELY AFTER COMPLETION OF END BENT EXCAVATION. PIPE MAY BE EITHER CONCRETE, CORRUGATED STEEL, CORRUGATED ALUMINUM ALLOY, OR CORRUGATED PLASTIC. PERFORATED PIPE WILL NOT BE ALLOWED.

BAGGED STONE SHALL REMAIN IN PLACE UNTIL THE ENGINEER DIRECTS THAT IT BE REMOVED. THE CONTRACTOR SHALL REMOVE AND DISPOSE OF SILT ACCUMULATIONS AT BAGGED STONE WHEN SO DIRECTED BY THE ENGINEER. BAGS SHALL BE REMOVED AND REPLACED WHENEVER THE ENGINEER DETERMINES THAT THEY HAVE DETERIORATED AND LOST THEIR EFFECTIVENESS.

NO SEPARATE PAYMENT WILL BE MADE FOR THIS WORK AND THE ENTIRE COST OF THIS WORK SHALL BE INCLUDED IN THE UNIT CONTRACT PRICE BID FOR THE SEVERAL PAY ITEMS.

TEMPORARY DRAINAGE AT END BENT

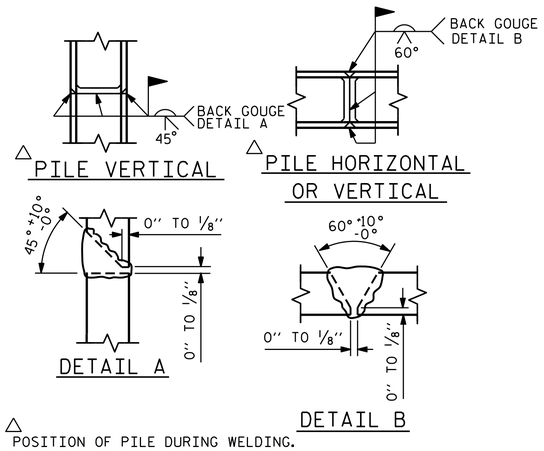

PILE SPLICE DETAILS

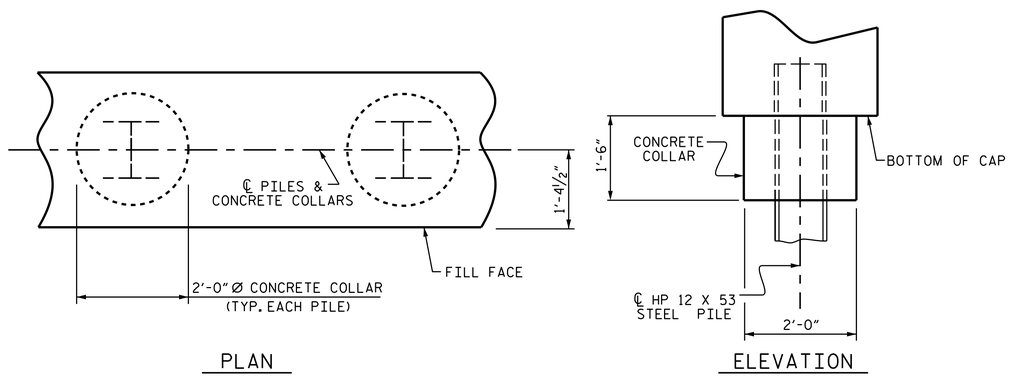

CORROSION PROTECTION FOR STEEL PILES DETAIL

(END BENT No. 1 SHOWN, END BENT No. 2 SIMILAR BY ROTATION)

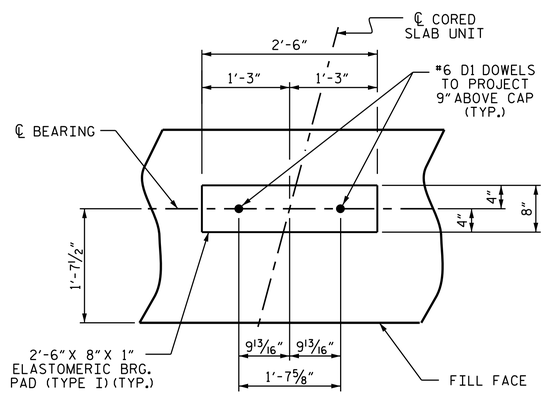

DETAIL "A"

(END BENT No. 1 SHOWN, END BENT No. 2 SIMILAR BY ROTATION)

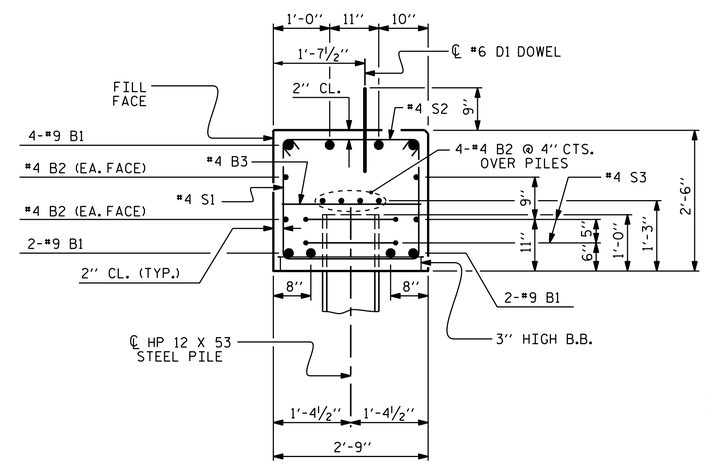

SECTION A-A

(CONCRETE COLLAR NOT SHOWN FOR CLARITY. SEE "CORROSION PROTECTION FOR STEEL PILES DETAIL.")

BAR TYPES

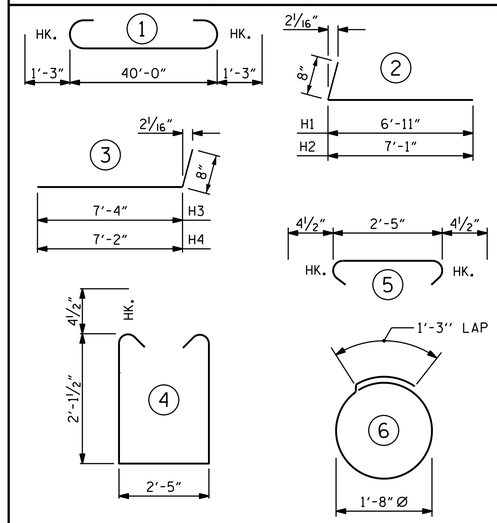

ALL BAR DIMENSIONS ARE OUT TO OUT.

END BENT No. 1		END BENT No. 2	
HP 12 X 53 STEEL PILES		HP 12 X 53 STEEL PILES	
NO: 7	LIN. FT.= 385	NO: 7	LIN. FT.= 350
PILE REDRIVES	4 EACH	PILE REDRIVES	4 EACH

BILL OF MATERIAL FOR ONE END BENT

BAR	NO.	SIZE	TYPE	LENGTH	WEIGHT
B1	8	#9	1	42'-6"	1156
B2	16	#4	STR	21'-4"	228
B3	10	#4	STR	2'-5"	16
D1	22	#6	STR	1'-6"	50
H1	6	#4	2	7'-7"	30
H2	6	#4	2	7'-9"	31
H3	6	#4	3	8'-0"	32
H4	6	#4	3	7'-10"	31
K1	12	#4	STR	3'-1"	25
S1	52	#4	4	7'-5"	258
S2	52	#4	5	3'-2"	110
S3	14	#4	6	6'-6"	61
V1	49	#4	STR	4'-8"	153

REINFORCING STEEL (FOR ONE END BENT) 2181 LBS.

CLASS A CONCRETE BREAKDOWN (FOR ONE END BENT)

POUR #1 CAP, LOWER PART OF WINGS & COLLARS 12.7 C.Y.

POUR #2 UPPER PART OF WINGS 1.8 C.Y.

TOTAL CLASS A CONCRETE 14.5 C.Y.

PROJECT NO. 17BP.3.R.43

SAMPSON COUNTY

STATION: 15+68.00 -L-

SHEET 4 OF 4

STATE OF NORTH CAROLINA
DEPARTMENT OF TRANSPORTATION
RALEIGH

SUBSTRUCTURE

END BENT No. 1 & 2 DETAILS

NORTH CAROLINA PROFESSIONAL SEAL 21271 ENGINEER GREGORY W. DICKEY

DocuSigned by: Greg Dickey
2/15/2016

DOCUMENT NOT CONSIDERED FINAL UNLESS ALL SIGNATURES COMPLETED

REVISIONS						
NO.	BY:	DATE:	NO.	BY:	DATE:	
1			3			
2			4			

SHEET NO. S-13

TOTAL SHEETS 17

ASSEMBLED BY : A. K. PATEL		DATE : 01/25/16	
CHECKED BY : G. W. DICKEY		DATE : 02/08/16	
DRAWN BY : DGE 12/09	REV. 11/14	MAA/TMG	
CHECKED BY : MKT 01/10			

15-FEB-2016 13:48
S:\DPG1\Division3\17BP3R43Sampson13\Final_Plans\17BP.3.R.43_SD_CS.dgn
gdickey

STD. NO. EB_33_75S

NOTES

STIRRUPS IN CAP MAY BE SHIFTED AS NECESSARY TO CLEAR DOWELS.

★ INVERT ALTERNATE STIRRUPS.

GALVANIZE THE TOP OF EACH INTERIOR BENT PILE A MINIMUM OF 31 FEET. GALVANIZE IN ACCORDANCE WITH SECTION 1076 OF THE STANDARD SPECIFICATIONS.

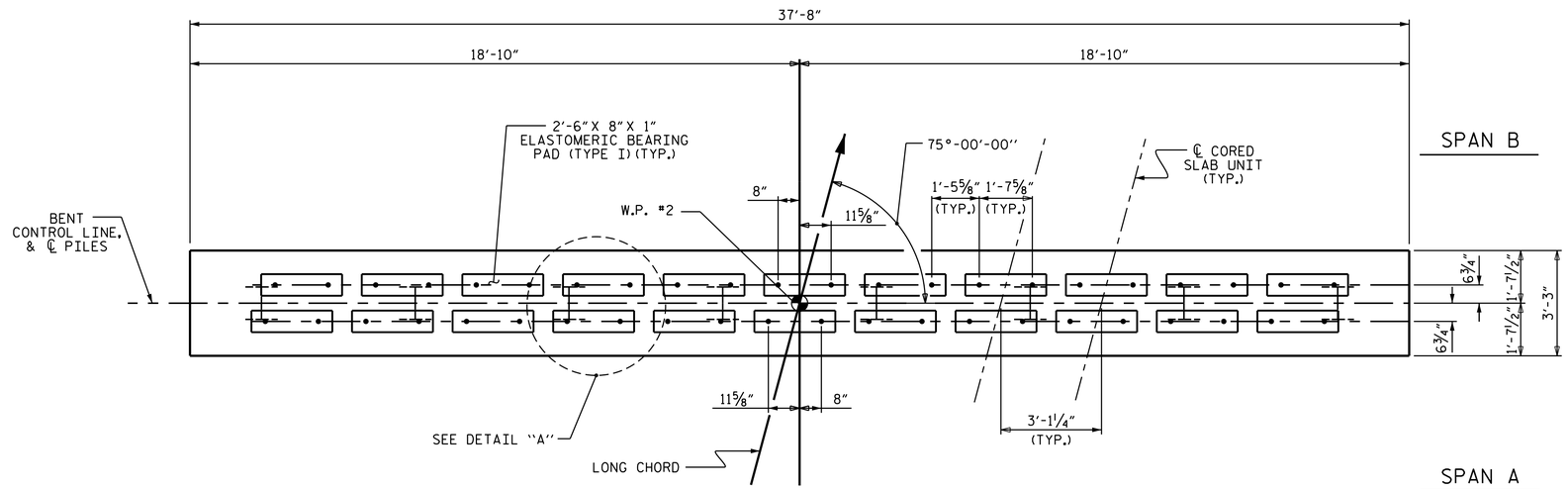

PLAN

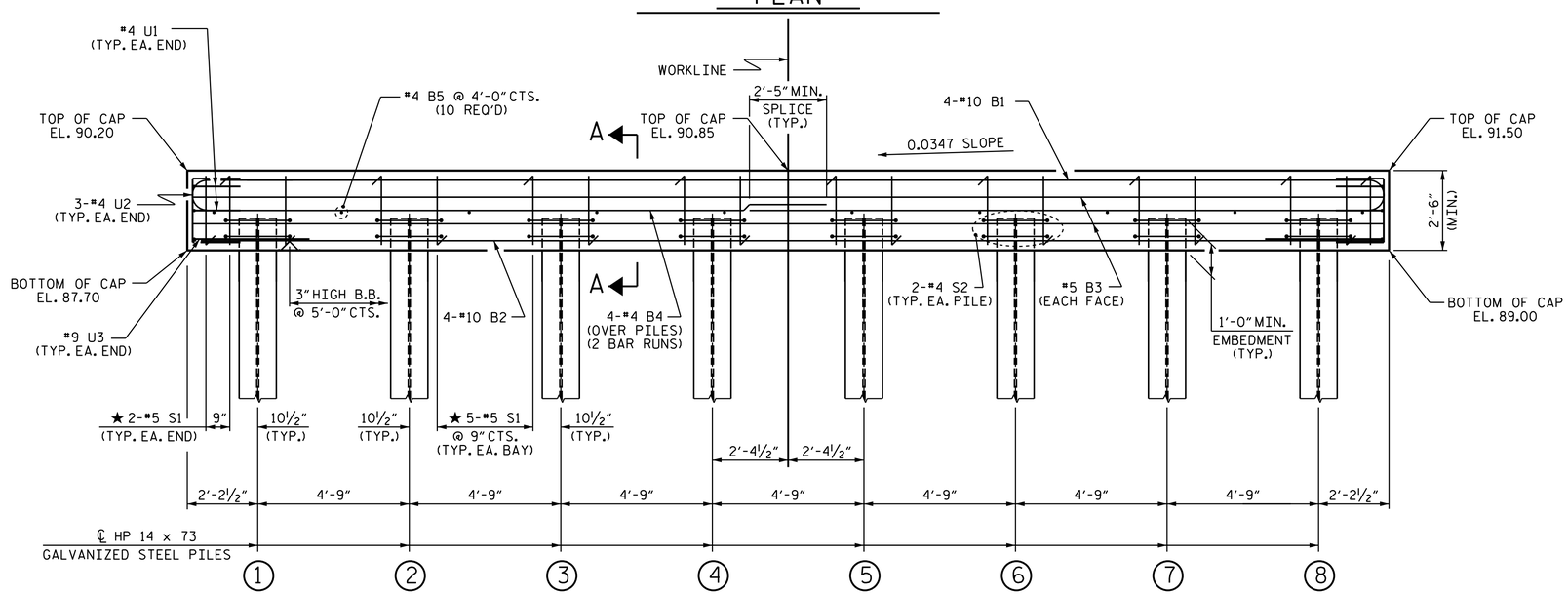

ELEVATION

FOR SECTION A-A, SEE SHEET 2 OF 2

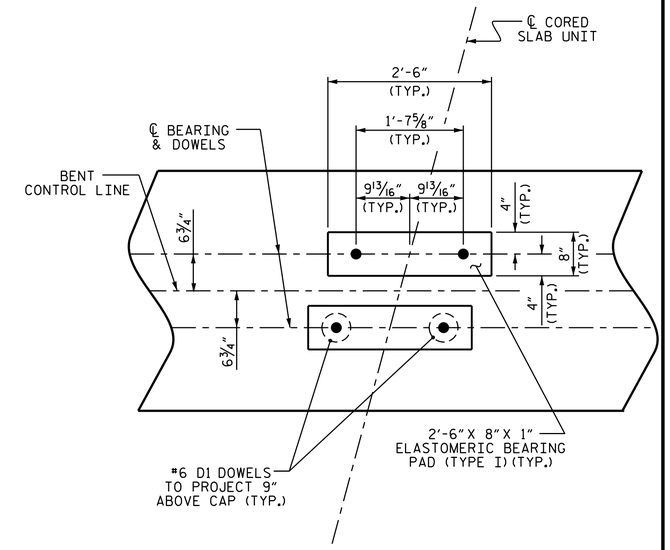

DETAIL "A"

(DIMENSIONS ARE TYPICAL EACH BEARING)

TOP OF PILE ELEVATIONS	
1	88.80
2	88.96
3	89.13
4	89.29
5	89.46
6	89.62
7	89.79
8	89.95

0.0347 SLOPE

PROJECT NO. 17BP.3.R.43
SAMPSON COUNTY
STATION: 15+68.00 -L-

SHEET 1 OF 2

NORTH CAROLINA PROFESSIONAL SEAL 21271 ENGINEER GREGORY W. DICKEY

DocuSigned by: Greg Dickey 884E468BCE5B4B6... 2/15/2016

STATE OF NORTH CAROLINA
DEPARTMENT OF TRANSPORTATION
RALEIGH

SUBSTRUCTURE

BENT No. 1

ASSEMBLED BY : A. K. PATEL	DATE : 01/25/16
CHECKED BY : G. W. DICKEY	DATE : 02/08/16
DRAWN BY : DGE 05/10	REV. 11/14 MAA/TMG
CHECKED BY : MKT 05/10	

DOCUMENT NOT CONSIDERED FINAL UNLESS ALL SIGNATURES COMPLETED

REVISIONS						SHEET NO.
NO.	BY:	DATE:	NO.	BY:	DATE:	S-14
1			3			TOTAL SHEETS
2			4			17

15-FEB-2016 13:48
S:\DPG1\Division3\17BP3R43Sampson13\Final_Plans\17BP.3.R.43_SD_CS.dgn
gdickey

STD. NO. 14" HP_BT_33_75S_<60'

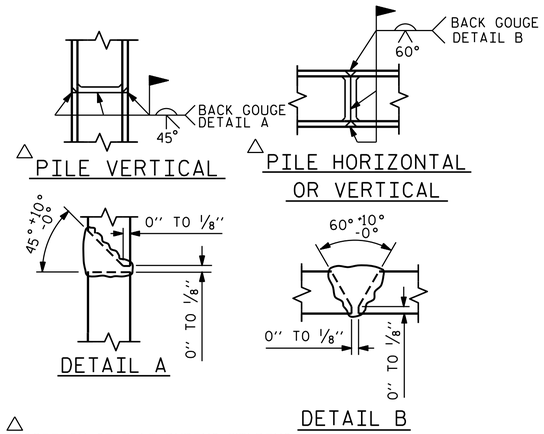

△ POSITION OF PILE DURING WELDING.

PILE SPLICE DETAILS

BAR TYPES

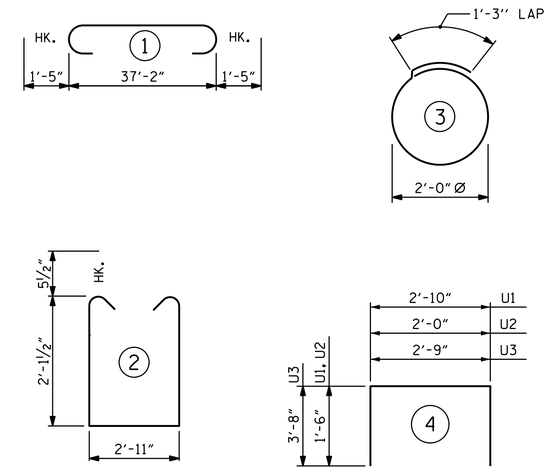

ALL BAR DIMENSIONS ARE OUT TO OUT.

BILL OF MATERIAL
FOR ONE BENT

BAR	NO.	SIZE	TYPE	LENGTH	WEIGHT
B1	4	#10	1	40'-0"	688
B2	4	#10	STR	37'-4"	643
B3	4	#5	STR	37'-4"	156
B4	8	#4	STR	19'-11"	106
B5	10	#4	STR	2'-11"	19
D1	44	#6	STR	1'-6"	99
S1	39	#5	2	8'-1"	329
S2	16	#4	3	7'-7"	81
U1	4	#4	4	5'-10"	16
U2	6	#4	4	5'-0"	20
U3	2	#9	4	10'-1"	69

REINFORCING STEEL (FOR ONE BENT) 2226 LBS

CLASS A CONCRETE BREAKDOWN (FOR ONE BENT)

TOTAL CLASS A CONCRETE 11.3 C.Y.

HP 14 X 73 GALVANIZED STEEL PILES (FOR ONE BENT)

No. 8 LIN. FT. 520

PILE REDRIVES 4 EACH

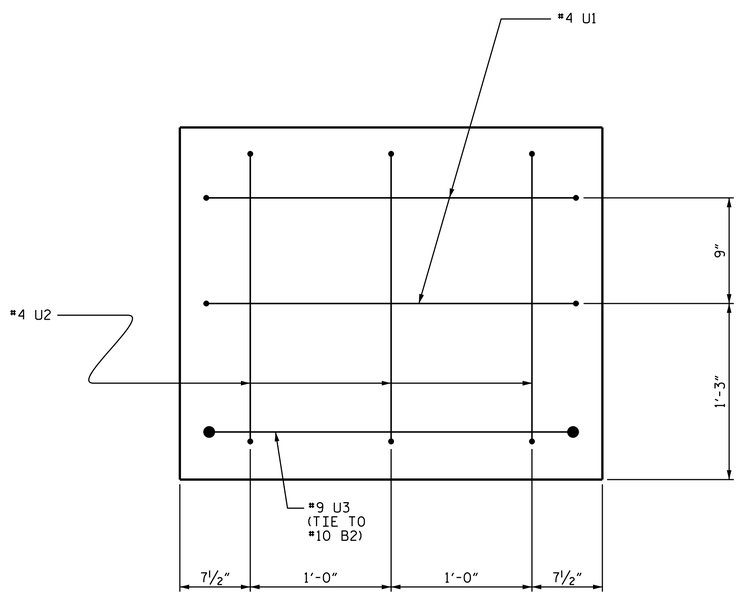

END OF CAP VIEW
(TYPICAL BOTH ENDS)

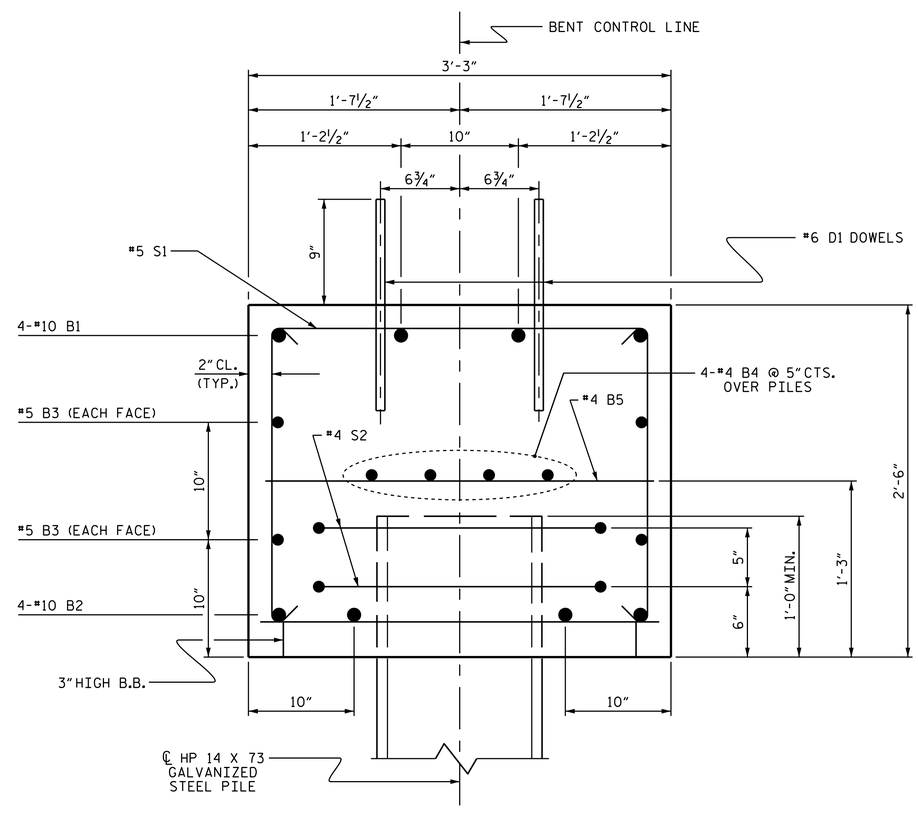

SECTION A-A

PROJECT NO. 17BP.3.R.43
SAMPSON COUNTY
STATION: 15+68.00 -L-

SHEET 2 OF 2

STATE OF NORTH CAROLINA
DEPARTMENT OF TRANSPORTATION
RALEIGH

SUBSTRUCTURE

BENT No. 1

NORTH CAROLINA PROFESSIONAL SEAL 21271 ENGINEER GREGORY W. DICKEY

DocuSigned by: Greg Dickey
2/15/2016

DOCUMENT NOT CONSIDERED FINAL UNLESS ALL SIGNATURES COMPLETED

REVISIONS						
NO.	BY:	DATE:	NO.	BY:	DATE:	
1			3			
2			4			

SHEET NO. S-15
TOTAL SHEETS 17

DRAWN BY : A. K. PATEL DATE : 1/25/16
CHECKED BY : G. W. DICKEY DATE : 2/08/16
DRAWN BY : DGE 05/10
CHECKED BY : MKT 05/10
REV. 11/14 MAA/TMG

15-FEB-2016 13:48
S:\DPG1\Division3\17BP3R43Sampson13\Final_Plans\17BP.3.R.43_SD_CS.dgn
gdickey

STD. NO. 14" HP_BT_33_75&105S_<60'

NOTES :

FOR BERM WIDTH DIMENSIONS, SEE GENERAL DRAWING.

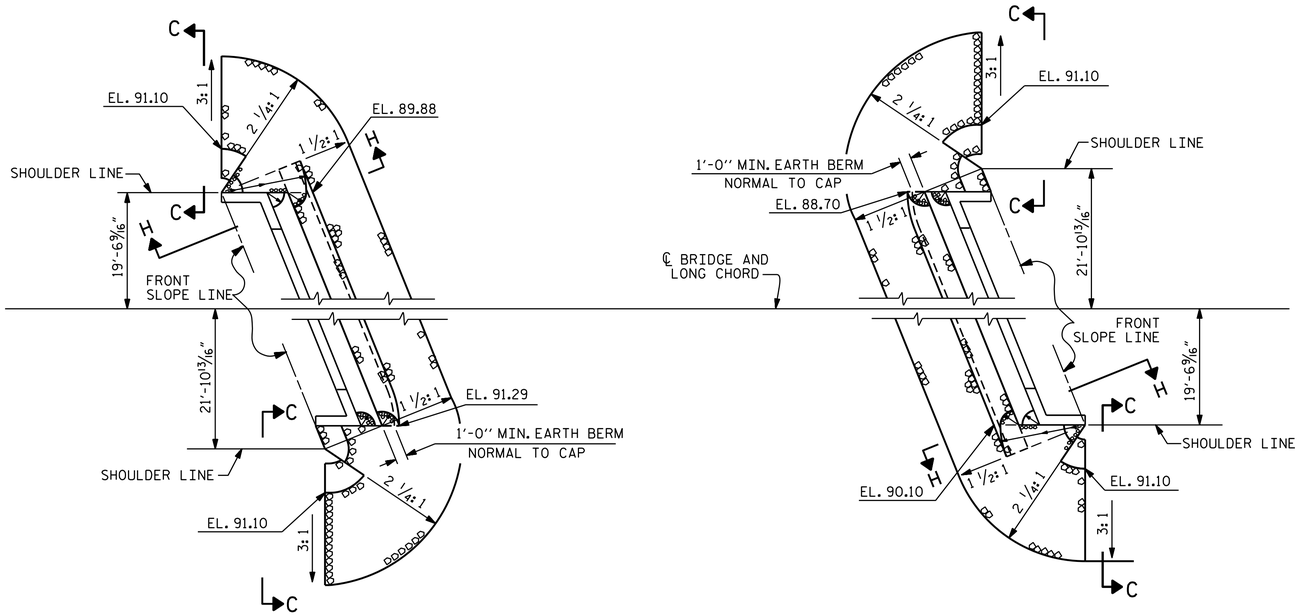

PLAN

ESTIMATED QUANTITIES		
BRIDGE @ STA. 15+68.00 -L-	RIP RAP CLASS II (2'-0" THICK)	GEOTEXTILE FOR DRAINAGE
	TONS	SQUARE YARDS
END BENT 1	85	95
END BENT 2	65	70

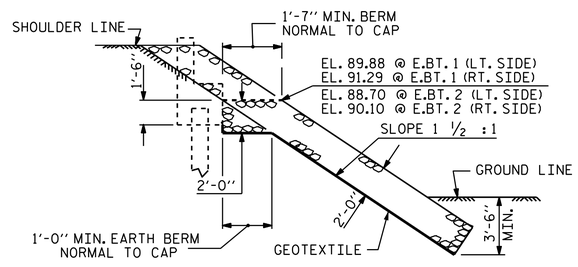

SECTION H-H

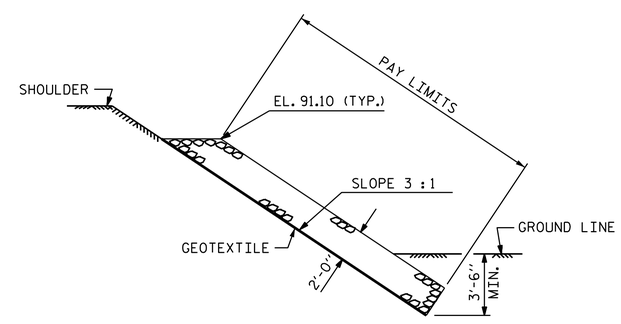

SECTION C-C

PROJECT NO. 17BP.3.R.43

SAMPSON COUNTY

STATION: 15+68.00 -L-

STATE OF NORTH CAROLINA
DEPARTMENT OF TRANSPORTATION
RALEIGH

STANDARD

RIP RAP DETAILS

NORTH CAROLINA PROFESSIONAL SEAL 21271 ENGINEER GREGORY W. DICKEY

DocuSigned by: Greg Dickey
2/15/2016

DOCUMENT NOT CONSIDERED FINAL UNLESS ALL SIGNATURES COMPLETED

REVISIONS							
NO.	BY:	DATE:	NO.	BY:	DATE:	SHEET NO.	S-16
1			3			TOTAL SHEETS	17
2			4				

ASSEMBLED BY :	A. K. PATEL	DATE :	01/25/16
CHECKED BY :	G. W. DICKEY	DATE :	02/09/16
DRAWN BY : REK 1/84	REV. 5/1/06R		TLA/GM
CHECKED BY : RDU 1/84	REV. 10/1/11		MAA/GM
	REV. 12/21/11		MAA/GM

15-FEB-2016 13:48
S:\DPG1\Division3\17BP3R43Sampson13\Final_Plans\17BP.3.R.43_SD_CS.dgn
gdickey

STD. NO. RR1 (Sht 1)

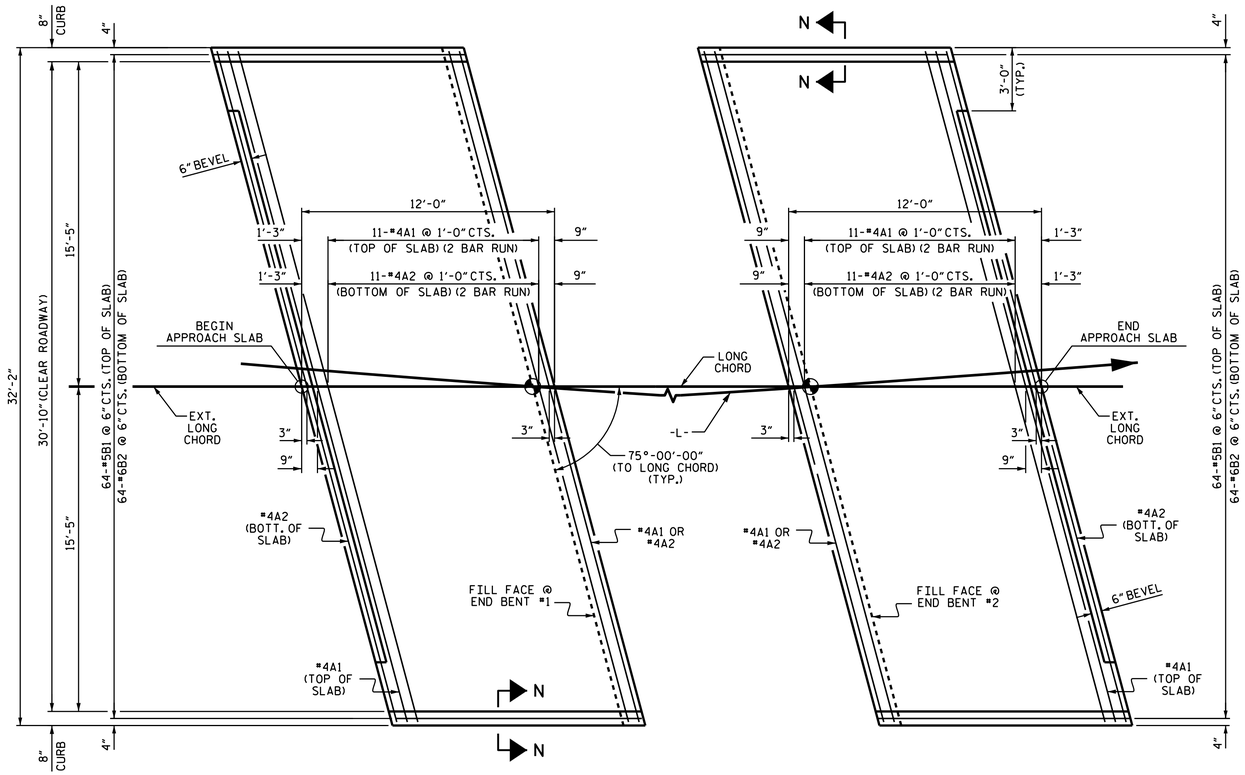

PLAN @ END BENT #1

PLAN @ END BENT #2

DIMENSIONS SHOWN ARE TYPICAL FOR BOTH APPROACH SLABS

NOTES

FOR REINFORCED BRIDGE APPROACH FILL INCLUDING GEOTEXTILE, IMPERMEABLE GEOMEMBRANE, 4" Ø DRAINAGE PIPE, #78M STONE, AND SELECT MATERIAL, SEE ROADWAY PLANS.

AREA BETWEEN THE WINGWALL AND APPROACH SLAB SHALL BE GRADED TO DRAIN THE WATER AWAY FROM THE FILL FACE OF THE BRIDGE AND SHALL BE PAVED. SEE ROADWAY PLANS.

APPROACH SLAB GROOVING IS NOT REQUIRED.

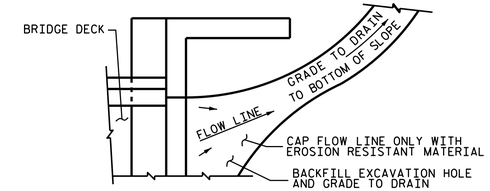

NOTE: IF THE APPROACH SLAB IS NOT CONSTRUCTED IMMEDIATELY AFTER THE BACKFILLING OF THE END BENT EXCAVATION, GRADE TO DRAIN TO THE BOTTOM OF THE SLOPE AND PROVIDE EROSION RESISTANT MATERIAL, SUCH AS FIBERGLASS ROVING OR AS DIRECTED BY THE ENGINEER TO PREVENT SOIL EROSION AND TO PROTECT THE AREA ADJACENT TO THE STRUCTURE. THE CONTRACTOR WILL BE REQUIRED TO REMOVE THESE MATERIALS PRIOR TO CONSTRUCTION OF THE APPROACH SLAB.

TEMPORARY DRAINAGE DETAIL

BILL OF MATERIAL

APPROACH SLAB AT EB #1

BAR	NO.	SIZE	TYPE	LENGTH	WEIGHT
* A1	26	#4	STR	17'-6"	304
A2	26	#4	STR	17'-5"	302
* B1	64	#5	STR	11'-1"	740
B2	64	#6	STR	11'-7"	1113
REINFORCING STEEL				LBS.	1415
* EPOXY COATED REINFORCING STEEL				LBS.	1044
CLASS AA CONCRETE				C. Y.	18.4

APPROACH SLAB AT EB #2

BAR	NO.	SIZE	TYPE	LENGTH	WEIGHT
* A1	26	#4	STR	17'-6"	304
A2	26	#4	STR	17'-5"	302
* B1	64	#5	STR	11'-1"	740
B2	64	#6	STR	11'-7"	1113
REINFORCING STEEL				LBS.	1415
* EPOXY COATED REINFORCING STEEL				LBS.	1044
CLASS AA CONCRETE				C. Y.	18.4

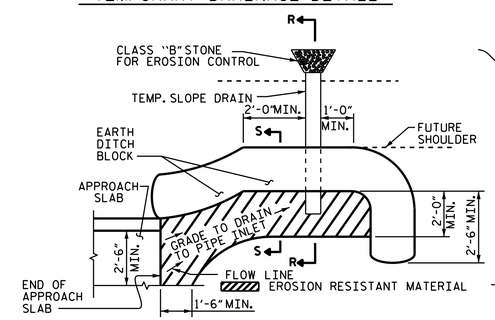

NOTE: IMMEDIATELY AFTER THE CONSTRUCTION OF THE APPROACH SLAB, THE CONTRACTOR SHALL PROVIDE TEMPORARY BERM AND SLOPE DRAIN. CONTRACTOR SHALL GRADE TO PIPE INLET AND PROVIDE EROSION RESISTANT MATERIAL AS SHOWN. THE EROSION RESISTANT MATERIAL SHALL BE EITHER 1) ASPHALT PLANT MIX, TYPE 1 OR TYPE 2, MIN. 2" DEPTH, 2) EROSION CONTROL MAT, OR 3) CONCRETE, AS DIRECTED BY THE ENGINEER. THE SLOPE DRAIN SHALL CONSIST OF A NON-PERFORATED TEMPORARY DRAINAGE PIPE, 12 INCHES IN DIAMETER.

PLAN VIEW

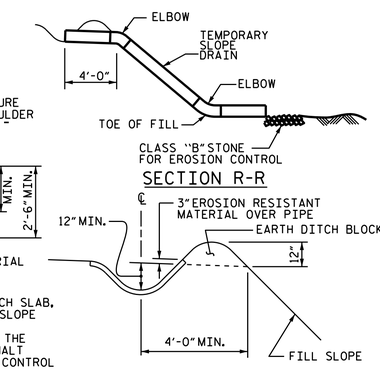

SECTION S-S

TEMPORARY BERM AND SLOPE DRAIN DETAILS

(TO BE USED WHEN SHOULDER BERM GUTTER IS REQUIRED)

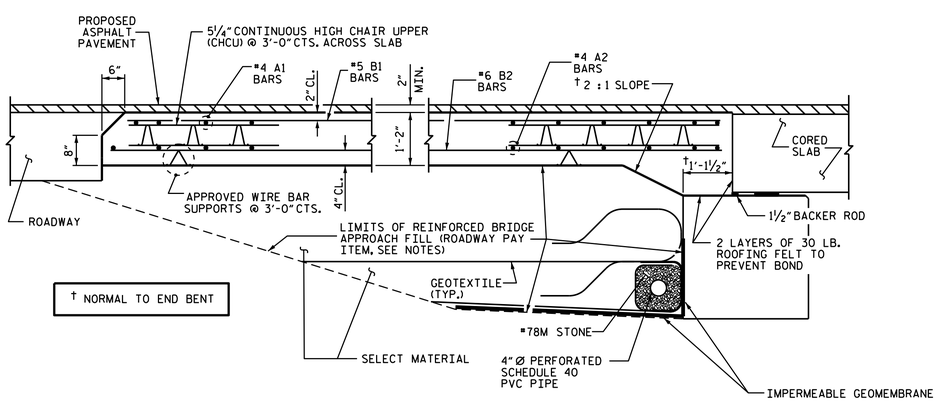

† NORMAL TO END BENT

SECTION THRU SLAB

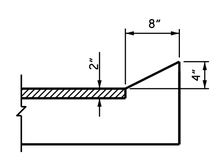

SECTION N-N

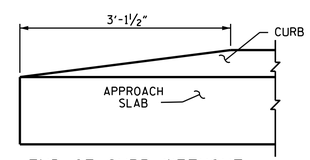

END OF CURB WITHOUT SHOULDER BERM GUTTER

CURB DETAILS

SPLICE LENGTHS		
BAR SIZE	EPOXY COATED	UNCOATED
#4	2'-0"	1'-9"
#5	2'-6"	2'-2"
#6	3'-10"	2'-7"

PROJECT NO. 17BP.3.R.43

SAMPSON COUNTY

STATION: 15+68.00 -L-

STATE OF NORTH CAROLINA
DEPARTMENT OF TRANSPORTATION
RALEIGH

STANDARD
BRIDGE APPROACH SLAB
FOR PRESTRESSED CONCRETE
CORED SLAB UNIT
75° SKEW

NORTH CAROLINA PROFESSIONAL SEAL 21271 ENGINEER GREGORY W. DICKEY

DocuSigned by: Greg Dickey 884E4BB8CE5B4B6... 2/15/2016

DOCUMENT NOT CONSIDERED FINAL UNLESS ALL SIGNATURES COMPLETED

REVISIONS						SHEET NO.
NO.	BY:	DATE:	NO.	BY:	DATE:	S-17
1			3			TOTAL SHEETS
2			4			17

ASSEMBLED BY :	A. K. PATEL	DATE :	01/25/16
CHECKED BY :	G. W. DICKEY	DATE :	02/09/16
DRAWN BY :	SHS/MAA 5-09	REV. 9-15	MAA/TMG
CHECKED BY :	BCH 5-09		

15-FEB-2016 13:48
S:\DPG1\Division3\17BP3R43Sampson13\Final_Plans\17BP.3.R.43_SD_CS.dgn
gdickey

STD. NO. BAS_33_75S

STANDARD NOTES

DESIGN DATA:

SPECIFICATIONS	A.A.S.H.T.O. (CURRENT)
LIVE LOAD	SEE PLANS
IMPACT ALLOWANCE	SEE A.A.S.H.T.O.
STRESS IN EXTREME FIBER OF	
STRUCTURAL STEEL - AASHTO M270 GRADE 36	20,000 LBS. PER SQ. IN.
- AASHTO M270 GRADE 50W	27,000 LBS. PER SQ. IN.
- AASHTO M270 GRADE 50	27,000 LBS. PER SQ. IN.
REINFORCING STEEL IN TENSION	
GRADE 60	24,000 LBS. PER SQ. IN.
CONCRETE IN COMPRESSION	1,200 LBS. PER SQ. IN.
CONCRETE IN SHEAR	SEE A.A.S.H.T.O.
STRUCTURAL TIMBER - TREATED OR	
UNTREATED - EXTREME FIBER STRESS	1,800 LBS. PER SQ. IN.
COMPRESSION PERPENDICULAR TO GRAIN OF TIMBER	375 LBS. PER SQ. IN.
EQUIVALENT FLUID PRESSURE OF EARTH	30 LBS. PER CU. FT. (MINIMUM)

MATERIAL AND WORKMANSHIP:

EXCEPT AS MAY OTHERWISE BE SPECIFIED ON PLANS OR IN THE SPECIAL PROVISIONS, ALL MATERIAL AND WORKMANSHIP SHALL BE IN ACCORDANCE WITH THE 2012 "STANDARD SPECIFICATIONS FOR ROADS AND STRUCTURES" OF THE N. C. DEPARTMENT OF TRANSPORTATION.

STEEL SHEET PILING FOR PERMANENT OR TEMPORARY APPLICATIONS SHALL BE HOT ROLLED.

CONCRETE:

UNLESS OTHERWISE REQUIRED ON PLANS, CLASS A CONCRETE SHALL BE USED FOR ALL PORTIONS OF ALL STRUCTURES WITH THE EXCEPTION THAT: CLASS AA CONCRETE SHALL BE USED IN BRIDGE SUPERSTRUCTURES, ABUTMENT BACKWALLS, AND APPROACH SLABS; AND CLASS B CONCRETE SHALL BE USED FOR SLOPE PROTECTION AND RIP RAP.

CONCRETE CHAMFERS:

UNLESS OTHERWISE NOTED ON THE PLANS, ALL EXPOSED CORNERS ON STRUCTURES SHALL BE CHAMFERED 3/4" WITH THE FOLLOWING EXCEPTIONS: TOP CORNERS OF CURBS MAY BE ROUNDED TO 1-1/2" RADIUS WHICH IS BUILT INTO CURB FORMS; CORNERS OF TRANSVERSE FLOOR EXPANSION JOINTS SHALL BE ROUNDED WITH A 1/4" FINISHING TOOL UNLESS OTHERWISE REQUIRED ON PLANS; AND CORNERS OF EXPANSION JOINTS IN THE ROADWAY FACES AND TOPS OF CURBS AND SIDEWALKS SHALL BE ROUNDED TO A 1/4" RADIUS WITH A FINISHING STONE OR TOOL UNLESS OTHERWISE REQUIRED ON PLANS.

DOWELS:

DOWELS WHEN INDICATED ON PLANS AS FOR CULVERT EXTENSIONS, SHALL BE EMBEDDED AT LEAST 12" INTO THE OLD CONCRETE AND GROUTED INTO PLACE WITH 1:2 CEMENT MORTAR.

ALLOWANCE FOR DEAD LOAD DEFLECTION, SETTLEMENT, ETC. IN CASTING SUPERSTRUCTURES:

BRIDGES SHALL BE BUILT ON THE GRADE OR VERTICAL CURVE SHOWN ON PLANS. SLABS, CURBS AND PARAPETS SHALL CONFORM TO THE GRADE OR CURVE.

ALL DIMENSIONS WHICH ARE GIVEN IN SECTION AND ARE AFFECTED BY DEAD LOAD DEFLECTIONS ARE DIMENSIONS AT CENTER LINE OF BEARING UNLESS OTHERWISE NOTED ON PLANS. IN SETTING FORMS FOR STEEL BEAM BRIDGES AND PRESTRESSED CONCRETE GIRDER BRIDGES, ADJUSTMENTS SHALL BE MADE DUE TO THE DEAD LOAD DEFLECTIONS FOR THE ELEVATIONS SHOWN. WHERE BLOCKS ARE SHOWN OVER BEAMS FOR BUILDING UP TO THE SLAB, THE VERTICAL DIMENSIONS OF THE BLOCKS SHALL BE ADJUSTED BETWEEN BEARINGS TO COMPENSATE FOR DEAD LOAD DEFLECTIONS, VERTICAL CURVE ORDINATE, AND ACTUAL BEAM CAMBER. WHERE BOTTOM OF SLAB IS IN LINE WITH BOTTOM OF TOP FLANGES, DEPTH OF SLAB BETWEEN BEARINGS SHALL BE ADJUSTED TO COMPENSATE FOR DEAD LOAD DEFLECTION, VERTICAL CURVE ORDINATE, AND ACTUAL BEAM CAMBER.

IN SETTING FALSEWORK AND FORMS FOR REINFORCED CONCRETE SPANS, AN ALLOWANCE SHALL BE MADE FOR DEAD LOAD DEFLECTIONS, SETTLEMENT OF FALSEWORK, AND PERMANENT CAMBER WHICH SHALL BE PROVIDED FOR IN ADDITION TO THE ELEVATIONS SHOWN. AFTER REMOVAL OF THE FALSEWORK, THE FINISHED STRUCTURES SHALL CONFORM TO THE PROFILE AND ELEVATIONS SHOWN ON THE PLANS AND CONSTRUCTION ELEVATIONS FURNISHED BY THE ENGINEER.

DETAILED DRAWINGS FOR FALSEWORK OR FORMS FOR BRIDGE SUPERSTRUCTURE AND ANY STRUCTURE OR PARTS OF A STRUCTURE AS NOTED ON THE PLANS SHALL BE SUBMITTED TO THE ENGINEER FOR APPROVAL BEFORE CONSTRUCTION OF THE FALSEWORK OR FORMS IS STARTED.

REINFORCING STEEL:

ALL REINFORCING STEEL SHALL BE DEFORMED. DIMENSIONS RELATIVE TO PLACEMENT OF REINFORCING ARE TO CENTERS OF BARS UNLESS OTHERWISE INDICATED IN THE PLANS. DIMENSIONS ON BAR DETAILS ARE TO CENTERS OF BARS OR ARE OUT TO OUT AS INDICATED ON PLANS.

WIRE BAR SUPPORTS SHALL BE PROVIDED FOR REINFORCING STEEL WHERE INDICATED ON THE PLANS. WHEN BAR SUPPORT PIECES ARE PLACED IN CONTINUOUS LINES, THEY SHALL BE SO PLACED THAT THE ENDS OF THE SUPPORTING WIRES SHALL BE LAPPED TO LOCK LEGS ON ADJOINING PIECES.

STRUCTURAL STEEL:

AT THE CONTRACTOR'S OPTION, HE MAY SUBSTITUTE 7/8" Ø SHEAR STUDS FOR THE ¾" Ø STUDS SPECIFIED ON THE PLANS. THIS SUBSTITUTION SHALL BE MADE AT THE RATE OF 3 - 7/8" Ø STUDS FOR 4 - 3/4" Ø STUDS, AND STUD SPACING CHANGES SHALL BE MADE AS NECESSARY TO PROVIDE THE SAME EQUIVALENT NUMBER OF 7/8" Ø STUDS ALONG THE BEAM AS SHOWN FOR 3/4" Ø STUDS BASED ON THE RATIO OF 3 - 7/8" Ø STUDS FOR 4 - 3/4" Ø STUDS. STUDS OF THE LENGTH SPECIFIED ON THE PLANS MUST BE PROVIDED. THE MAXIMUM SPACING SHALL BE 2'-0".

EXCEPT AT THE INTERIOR SUPPORTS OF CONTINUOUS BEAMS WHERE THE COVER PLATE IS IN CONTACT WITH BEARING PLATE, THE CONTRACTOR MAY, AT HIS OPTION, SUBSTITUTE FOR THE COVER PLATES DESIGNATED ON THE PLANS COVER PLATES OF THE EQUIVALENT AREA PROVIDED THESE PLATES ARE AT LEAST 5/16" IN THICKNESS AND DO NOT EXCEED A WIDTH EQUAL TO THE FLANGE WIDTH LESS 2" OR A THICKNESS EQUAL TO 2 TIMES THE FLANGE THICKNESS. THE SIZE OF FILLET WELDS SHALL CONFORM TO THE REQUIREMENTS OF THE CURRENT ANSI/AASHTO/AWS "BRIDGE WELDING CODE". ELECTROSLAG WELDING WILL NOT BE PERMITTED.

WITH THE SOLE EXCEPTION OF EDGES AT SURFACES WHICH BEAR ON OTHER SURFACES, ALL SHARP EDGES AND ENDS OF SHAPES AND PLATES SHALL BE SLIGHTLY ROUNDED BY SUITABLE MEANS TO A RADIUS OF APPROXIMATELY 1/16 INCH OR EQUIVALENT FLAT SURFACE AT A SUITABLE ANGLE PRIOR TO PAINTING, GALVANIZING, OR METALLIZING.

HANDRAILS AND POSTS:

METAL STANDARDS AND FACES OF THE CONCRETE END POSTS FOR THE METAL RAIL SHALL BE SET NORMAL TO THE GRADE OF THE CURB, UNLESS OTHERWISE SHOWN ON PLANS. THE METAL RAIL AND TOPS OF CONCRETE POSTS USED WITH THE ALUMINUM RAIL SHALL BE BUILT PARALLEL TO THE GRADE OF THE CURB.

METAL HANDRAILS SHALL BE IN ACCORDANCE WITH THE PLANS. RAILS SHALL BE AS MANUFACTURED FOR BRIDGE RAILING. CASTINGS SHALL BE OF A UNIFORM APPEARANCE. FINS AND OTHER DEFORMATIONS RESULTING FROM CASTING OR OTHERWISE SHALL BE REMOVED IN A MANNER SO THAT A UNIFORM COLORING OF THE COMPLETED CASTING SHALL BE OBTAINED. CASTINGS WITH DISCOLORATIONS OR OF NON-UNIFORM COLORING WILL NOT BE ACCEPTED. CERTIFIED MILL REPORTS ARE REQUIRED FOR METAL RAILS AND POSTS.

SPECIAL NOTES:

GENERALLY, IN CASE OF DISCREPANCY, THIS STANDARD SHEET OF NOTES SHALL GOVERN OVER THE SPECIFICATIONS, BUT THE REMAINDER OF THE PLANS SHALL GOVERN OVER NOTES HEREON, AND SPECIAL PROVISIONS SHALL GOVERN OVER ALL. SEE SPECIFICATIONS ARTICLE 105-4.

ENGLISH

JANUARY, 1990