DocuSign Envelope ID: 067A235F-0381-4EA9-9E6C-859425BCECAB

09/08/99

TIP PROJECT: B-4590

CONTRACT: DC00249

See Sheet 1A For Index of Sheets
See Sheet 1B For Conventional Symbols

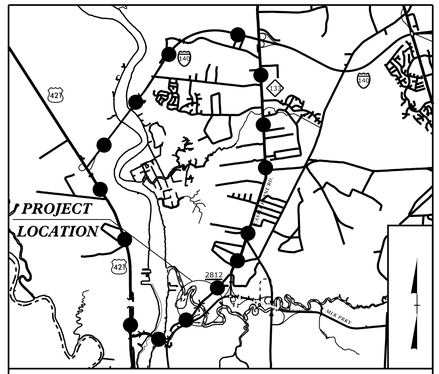

100% PLANS

DETOUR

VICINITY MAP N.T.S.

STATE OF NORTH CAROLINA
DIVISION OF HIGHWAYS

NEW HANOVER COUNTY

STATE	STATE PROJECT REFERENCE NO.	SHEET NO.	TOTAL SHEETS
N.C.	B-4590	1	

STATE PROJ. NO.	F. A. PROJ. NO.	DESCRIPTION
38420.1.2	N/A	PE
38420.2.1	N/A	ROW/UTL.
38420.3.3	N/A	CONST.

LOCATION: BRIDGE NO. 640029 OVER SMITH CREEK ON SR 2812 (CASTLE HAYNE ROAD)

TYPE OF WORK: GRADING, DRAINAGE, PAVING AND STRUCTURE (BRIDGE)

NAD 83/
NA 2011

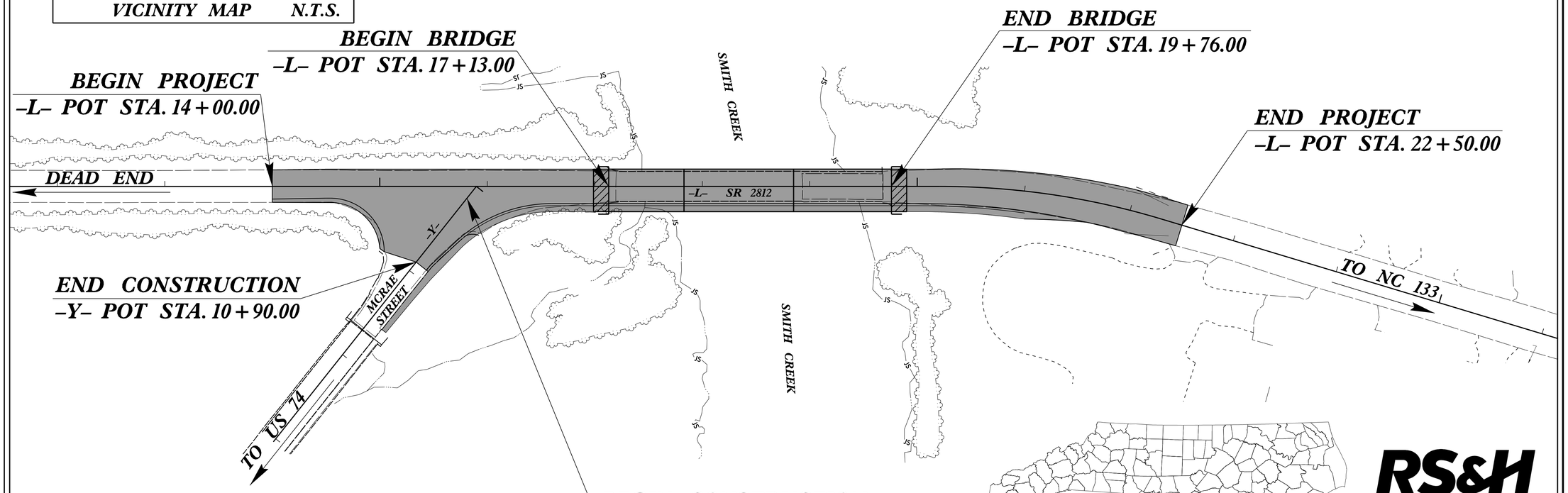

THERE IS NO CONTROL OF ACCESS ON THIS PROJECT.

GRAPHIC SCALES

50 25 0 50 100
PLANS

50 25 0 50 100
PROFILE (HORIZONTAL)

10 5 0 10 20
PROFILE (VERTICAL)

DESIGN DATA

ADT 2015 = 2800
ADT 2035 = 4200
K = 9 %
D = 60 %
T = 7 %
V = 40 MPH
* TTST = 1 DUAL = 6
FUNC CLASS = LOCAL
SUBREGIONAL TIER

PROJECT LENGTH

LENGTH ROADWAY = 0.138 MILES
LENGTH STRUCTURE = 0.050 MILES
TOTAL LENGTH = 0.188 MILES

Prepared in the Office of:
RS&H
ARCHITECTS-ENGINEERS-PLANNERS, INC.
8521 SIX FORKS ROAD, SUITE 400
RALEIGH, NC 27615

2018 STANDARD SPECIFICATIONS

RIGHT OF WAY DATE:
DECEMBER 18, 2018

LETTING DATE:
JULY 1, 2021

RICHARD L. BOLLINGER, PE
PROJECT ENGINEER

CHARLES J. YOUNG, PE
PROJECT DESIGN ENGINEER

DEREK R. PIELECH, PE
NCDOT CONTACT

HYDRAULICS ENGINEER

NORTH CAROLINA PROFESSIONAL SEAL 18442 ENGINEER RICHARD LEON BOLLINGER JR

6/6/2021
P.E.
SIGNATURE:

ROADWAY DESIGN ENGINEER

NORTH CAROLINA PROFESSIONAL SEAL 046062 ENGINEER CHARLES J. YOUNG

6/5/2021
P.E.
SIGNATURE:

STATE OF NORTH CAROLINA • DEPARTMENT OF TRANSPORTATION •

RS&H

DOCUMENT NOT CONSIDERED FINAL UNLESS ALL SIGNATURES COMPLETED

04-JUN-2021 09:40
R:\Roadway\Proj\640029_Rdy_tsh.dgn
$$$$USERNAME$$$$

DocuSign Envelope ID: 067A235F-0381-4EA9-9E6C-859425BCECAB

8/17/99

PROJECT REFERENCE NO.	SHEET NO.
B-4590	1A

ROADWAY DESIGN ENGINEER

NORTH CAROLINA PROFESSIONAL ENGINEER SEAL 046082 ENGINEER CHARLES J. YOUNG

6/8/2021

DOCUMENT NOT CONSIDERED FINAL UNLESS ALL SIGNATURES COMPLETED

INDEX OF SHEETS

SHEET NUMBER	SHEET
1	TITLE SHEET
1A	INDEX OF SHEETS, GENERAL NOTES, AND LIST OF STANDARD DRAWINGS
1B	CONVENTIONAL SYMBOLS
1C THRU 1D	SURVEY CONTROL SHEETS
2A-1 THRU 2A-2	PAVEMENT SCHEDULE AND TYPICAL SECTIONS
2B-1	MODIFIED METHOD III CLEARING DETAIL
2C-1	CONCRETE BRIDGE SIDEWALK APPROACH DEATIL
2C-2	TYPE III - STRUCTURE ANCHOR UNIT
2C-3	W-BEAM RAIL SECTION DETAIL
2G-1	GEOTECHNICAL DETAILS
3B-1	SUMMARY OF DRAINAGE QUANTITIES, SUMMARY OF GUARDRAIL, EARTHWORK SUMMARY, SHOULDE BERM GUTTER SUMMARY, AND ASPHALT PAVEMENT REMOVAL SUMMARY
3G-1	GEOTECHNICAL SUMMARY
4	PLAN SHEET
5	PROFILE SHEET
RW03E-1 THRU RW03E-2	R/W PLAN SHEETS
TMP-1 THRU TMP-5	TRAFFIC MANAGEMENT PLANS
PMP-1 THRU PMP-2	PAVEMENT MARKING PLANS
EC-1 THRU EC-5	EROSION CONTROL PLANS
SIGN-1 THRU SIGN-5	SIGNING PLANS
UC-1 THRU UC-6	UTILITY CONSTRUCTION PLANS
UO-1 THRU UO-3	UTILITIES BY OTHERS
X-1A	CROSS-SECTION SUMMARY SHEET
X-1 THRU X-9	CROSS-SECTIONS
S-1 THRU S-42	STRUCTURE PLANS
SN	STRUCTURE STANDARD NOTES SHEET

GENERAL NOTES

GENERAL NOTES: 2018 SPECIFICATIONS
EFFECTIVE: 01-16-2018
REVISED:

GRADE LINE:
GRADING AND SURFACING:

THE GRADE LINES SHOWN DENOTE THE FINISHED ELEVATION OF THE PROPOSED SURFACING AT GRADE POINTS SHOWN ON THE TYPICAL SECTIONS. GRADE LINES MAY BE ADJUSTED AT THEIR BEGINNING AND ENDING AND AT STRUCTURES AS DIRECTED BY THE ENGINEER IN ORDER TO SECURE A PROPER TIE-IN.

CLEARING:

CLEARING ON THIS PROJECT SHALL BE PERFORMED TO THE LIMITS ESTABLISHED BY MODIFIED METHOD III.

SUPERELEVATION:

ALL CURVES ON THIS PROJECT SHALL BE SUPERELEVATED IN ACCORDANCE WITH STD. NO. 225.04 USING THE RATE OF SUPERELEVATION AND RUNOFF SHOWN ON THE PLANS. SUPERELEVATION IS TO BE REVOLVED ABOUT THE GRADE POINTS SHOWN ON THE TYPICAL SECTIONS.

SHOULDER CONSTRUCTION:

ASPHALT, EARTH, AND CONCRETE SHOULDER CONSTRUCTION ON THE HIGH SIDE OF SUPERELEVATED CURVES SHALL BE IN ACCORDANCE WITH STD. NO. 560.01

SIDE ROADS:

THE CONTRACTOR WILL BE REQUIRED TO DO ALL NECESSARY WORK TO PROVIDE SUITABLE CONNECTIONS WITH ALL ROADS, STREETS, AND DRIVES ENTERING THIS PROJECT. THIS WORK WILL BE PAID FOR AT THE CONTRACT UNIT PRICE FOR THE PARTICULAR ITEMS INVOLVED.

STREET TURNOUT:

STREET RETURNS SHALL BE CONSTRUCTED IN ACCORDANCE WITH STD. NO. 848.04 USING THE RADII NOTED ON PLANS.

GUARDRAIL:

THE GUARDRAIL LOCATIONS SHOWN ON THE PLANS MAY BE ADJUSTED DURING CONSTRUCTION AS DIRECTED BY THE ENGINEER. THE CONTRACTOR SHOULD CONSULT WITH THE ENGINEER PRIOR TO ORDERING GUARDRAIL MATERIAL.

END BENTS:

THE ENGINEER SHALL CHECK THE STRUCTURE END BENT PLANS, DETAILS, AND CROSS-SECTION PRIOR TO SETTING OF THE SLOPE STAKES FOR THE EMBANKMENT OR EXCAVATION APPROACHING A BRIDGE.

UTILITIES:

UTILITY OWNERS ON THIS PROJECT ARE DUKE ENERGY, AT&T, PIEDMONT NATURAL GAS, SPECTRUM CABLE, CENTURY LINK, CAPE FEAR PUBLIC UTILITY AUTHORITY

ANY RELOCATION OF EXISTING UTILITIES WILL BE ACCOMPLISHED BY OTHERS, EXCEPT AS SHOWN ON THE PLANS.

RIGHT-OF-WAY MARKERS:

ALL RIGHT-OF-WAY & PERMANENT EASEMENT MARKERS ON THIS PROJECT ARE PLACED BY L&S. THE CONTRACT SURVEYOR WILL BE RESPONSIBLE FOR RESETTING ANY POINTS DISTURBED DURING CONSTRUCTION.

STANDARD DRAWINGS

EFF. 01-16-2018
REV.

2018 ROADWAY ENGLISH STANDARD DRAWINGS

The following Roadway Standards as appear in "Roadway Standard Drawings" Highway Design Branch - N. C. Department of Transportation - Raleigh, N. C., Dated January, 2018 are applicable to this project and by reference hereby are considered a part of these plans:

STD.NO.	TITLE
DIVISION 2 - EARTHWORK	
225.02	Guide for Grading Subgrade - Secondary and Local
225.04	Method of Obtaining Superelevation - Two Lane Pavement
225.06	Method of Grading Sight Distance at Intersections
DIVISION 3 - PIPE CULVERTS	
300.01	Method of Pipe Installation
DIVISION 4 - MAJOR STRUCTURES	
422.01	Bridge Approach Fills - Type I Standard Approach Fill
422.03	Reinforced Bridge Approach Fills - Type A Alternate Approach Fill for Integral Abutment
DIVISION 5 - SUBGRADE, BASES AND SHOULDERS	
560.01	Method of Shoulder Construction - High Side of Superelevated Curve - Method I
DIVISION 8 - INCIDENTALS	
840.00	Concrete Base Pad for Drainage Structures
840.02	Concrete Catch Basin - 12" thru 54" Pipe
840.03	Frame, Grates and Hood - for Use on Standard Catch Basin
840.18	Concrete Grated Drop Inlet Type 'B' - 12" thru 36" Pipe
840.29	Frames and Narrow Slot Flat Grates
846.01	Concrete Curb, Gutter and Curb & Gutter
846.04	Drop Inlet Installation in Shoulder Berm Gutter
848.01	Concrete Sidewalk
848.04	Street Turnout
862.01	Guardrail Placement
862.02	Guardrail Installation
862.03	Structure Anchor Units
876.01	Rip Rap in Channels
876.02	Guide for Rip Rap at Pipe Outlets

08-JUN-2021 07:47
C:\Projects\6140029_Rdy_tsh.dgn
$$$$USERNAME$$$$

DocuSign Envelope ID: 067A235F-0381-4EA9-9E6C-859425BCECAB

12/2/2016

PROJECT REFERENCE NO.	SHEET NO.
B-4590	1B

STATE OF NORTH CAROLINA, DIVISION OF HIGHWAYS

CONVENTIONAL PLAN SHEET SYMBOLS

Note: Not to Scale **S.U.E. = Subsurface Utility Engineering*

BOUNDARIES AND PROPERTY:

- State Line
- County Line
- Township Line
- City Line
- Reservation Line
- Property Line
- Existing Iron Pin (EIP)
- Computed Property Corner
- Property Monument (ECM)
- Parcel/Sequence Number (123)
- Existing Fence Line
- Proposed Woven Wire Fence
- Proposed Chain Link Fence
- Proposed Barbed Wire Fence
- Existing Wetland Boundary (WLB)
- Proposed Wetland Boundary (WLB)
- Existing Endangered Animal Boundary (EAB)
- Existing Endangered Plant Boundary (EPB)
- Existing Historic Property Boundary (HPB)
- Known Contamination Area: Soil (S)
- Potential Contamination Area: Soil (S)
- Known Contamination Area: Water (W)
- Potential Contamination Area: Water (W)
- Contaminated Site: Known or Potential

BUILDINGS AND OTHER CULTURE:

- Gas Pump Vent or U/G Tank Cap
- Sign (S)
- Well (W)
- Small Mine
- Foundation
- Area Outline
- Cemetery
- Building
- School
- Church
- Dam

HYDROLOGY:

- Stream or Body of Water
- Hydro, Pool or Reservoir
- Jurisdictional Stream (JS)
- Buffer Zone 1 (BZ 1)
- Buffer Zone 2 (BZ 2)
- Flow Arrow
- Disappearing Stream
- Spring
- Wetland
- Proposed Lateral, Tail, Head Ditch (FLOW)
- False Sump

RAILROADS:

- Standard Gauge (CSX TRANSPORTATION)
- RR Signal Milepost (MILEPOST 35)
- Switch (SWITCH)
- RR Abandoned
- RR Dismantled

RIGHT OF WAY & PROJECT CONTROL:

- Secondary Horiz and Vert Control Point
- Primary Horiz Control Point
- Primary Horiz and Vert Control Point
- Exist Permanent Easement Pin and Cap
- New Permanent Easement Pin and Cap
- Vertical Benchmark
- Existing Right of Way Marker
- Existing Right of Way Line
- New Right of Way Line (RW)
- New Right of Way Line with Pin and Cap (RW)
- New Right of Way Line with Concrete or Granite R/W Marker (RW)
- New Control of Access Line with Concrete C/A Marker (CA)
- Existing Control of Access (CA)
- New Control of Access (CA)
- Existing Easement Line (E)
- New Temporary Construction Easement (E)
- New Temporary Drainage Easement (TDE)
- New Permanent Drainage Easement (PDE)
- New Permanent Drainage / Utility Easement (DUE)
- New Permanent Utility Easement (PUE)
- New Temporary Utility Easement (TUE)
- New Aerial Utility Easement (AUE)

ROADS AND RELATED FEATURES:

- Existing Edge of Pavement
- Existing Curb
- Proposed Slope Stakes Cut (C)
- Proposed Slope Stakes Fill (F)
- Proposed Curb Ramp (CR)
- Existing Metal Guardrail
- Proposed Guardrail
- Existing Cable Guiderail
- Proposed Cable Guiderail
- Equality Symbol
- Pavement Removal

VEGETATION:

- Single Tree
- Single Shrub
- Hedge
- Woods Line
- Orchard
- Vineyard (Vineyard)

EXISTING STRUCTURES:

MAJOR:

- Bridge, Tunnel or Box Culvert (CONC)
- Bridge Wing Wall, Head Wall and End Wall (CONC WW)

MINOR:

- Head and End Wall (CONC HW)
- Pipe Culvert
- Footbridge
- Drainage Box: Catch Basin, DI or JB (CB)
- Paved Ditch Gutter
- Storm Sewer Manhole (S)
- Storm Sewer (S)

UTILITIES:

POWER:

- Existing Power Pole
- Proposed Power Pole
- Existing Joint Use Pole
- Proposed Joint Use Pole
- Power Manhole (P)
- Power Line Tower
- Power Transformer
- U/G Power Cable Hand Hole
- H-Frame Pole
- U/G Power Line LOS B (S.U.E.*) (P)
- U/G Power Line LOS C (S.U.E.*) (P)
- U/G Power Line LOS D (S.U.E.*) (P)

TELEPHONE:

- Existing Telephone Pole
- Proposed Telephone Pole
- Telephone Manhole (T)
- Telephone Pedestal (T)
- Telephone Cell Tower
- U/G Telephone Cable Hand Hole (HH)
- U/G Telephone Cable LOS B (S.U.E.*) (T)
- U/G Telephone Cable LOS C (S.U.E.*) (T)
- U/G Telephone Cable LOS D (S.U.E.*) (T)
- U/G Telephone Conduit LOS B (S.U.E.*) (TC)
- U/G Telephone Conduit LOS C (S.U.E.*) (TC)
- U/G Telephone Conduit LOS D (S.U.E.*) (TC)
- U/G Fiber Optics Cable LOS B (S.U.E.*) (T FO)
- U/G Fiber Optics Cable LOS C (S.U.E.*) (T FO)
- U/G Fiber Optics Cable LOS D (S.U.E.*) (T FO)

WATER:

- Water Manhole (W)
- Water Meter
- Water Valve
- Water Hydrant
- U/G Water Line LOS B (S.U.E*) (W)
- U/G Water Line LOS C (S.U.E*) (W)
- U/G Water Line LOS D (S.U.E*) (W)
- Above Ground Water Line (A/G Water)

TV:

- TV Pedestal (C)
- TV Tower
- U/G TV Cable Hand Hole (HH)
- U/G TV Cable LOS B (S.U.E.*) (TV)
- U/G TV Cable LOS C (S.U.E.*) (TV)
- U/G TV Cable LOS D (S.U.E.*) (TV)
- U/G Fiber Optic Cable LOS B (S.U.E.*) (TV FO)
- U/G Fiber Optic Cable LOS C (S.U.E.*) (TV FO)
- U/G Fiber Optic Cable LOS D (S.U.E.*) (TV FO)

GAS:

- Gas Valve
- Gas Meter
- U/G Gas Line LOS B (S.U.E.*) (G)
- U/G Gas Line LOS C (S.U.E.*) (G)
- U/G Gas Line LOS D (S.U.E.*) (G)
- Above Ground Gas Line (A/G Gas)

SANITARY SEWER:

- Sanitary Sewer Manhole
- Sanitary Sewer Cleanout
- U/G Sanitary Sewer Line (SS)
- Above Ground Sanitary Sewer (A/G Sanitary Sewer)
- SS Forced Main Line LOS B (S.U.E.*) (FSS)
- SS Forced Main Line LOS C (S.U.E.*) (FSS)
- SS Forced Main Line LOS D (S.U.E.*) (FSS)

MISCELLANEOUS:

- Utility Pole
- Utility Pole with Base
- Utility Located Object
- Utility Traffic Signal Box (S)
- Utility Unknown U/G Line LOS B (S.U.E.*) (?UTL)
- U/G Tank; Water, Gas, Oil
- Underground Storage Tank, Approx. Loc. (UST)
- A/G Tank; Water, Gas, Oil
- Geoenvironmental Boring
- U/G Test Hole LOS A (S.U.E.*)
- Abandoned According to Utility Records (AATUR)
- End of Information (E.O.I.)

DocuSign Envelope ID: 067A235F-0381-4EA9-9E6C-859425BCECAB

PROJECT REFERENCE NO.	SHEET NO.
B-4590	1C
Location and Surveys	

SURVEY CONTROL SHEET B-4590

W/ EXISTING CENTERLINE ALIGNMENTS PRIOR TO CONSTRUCTION

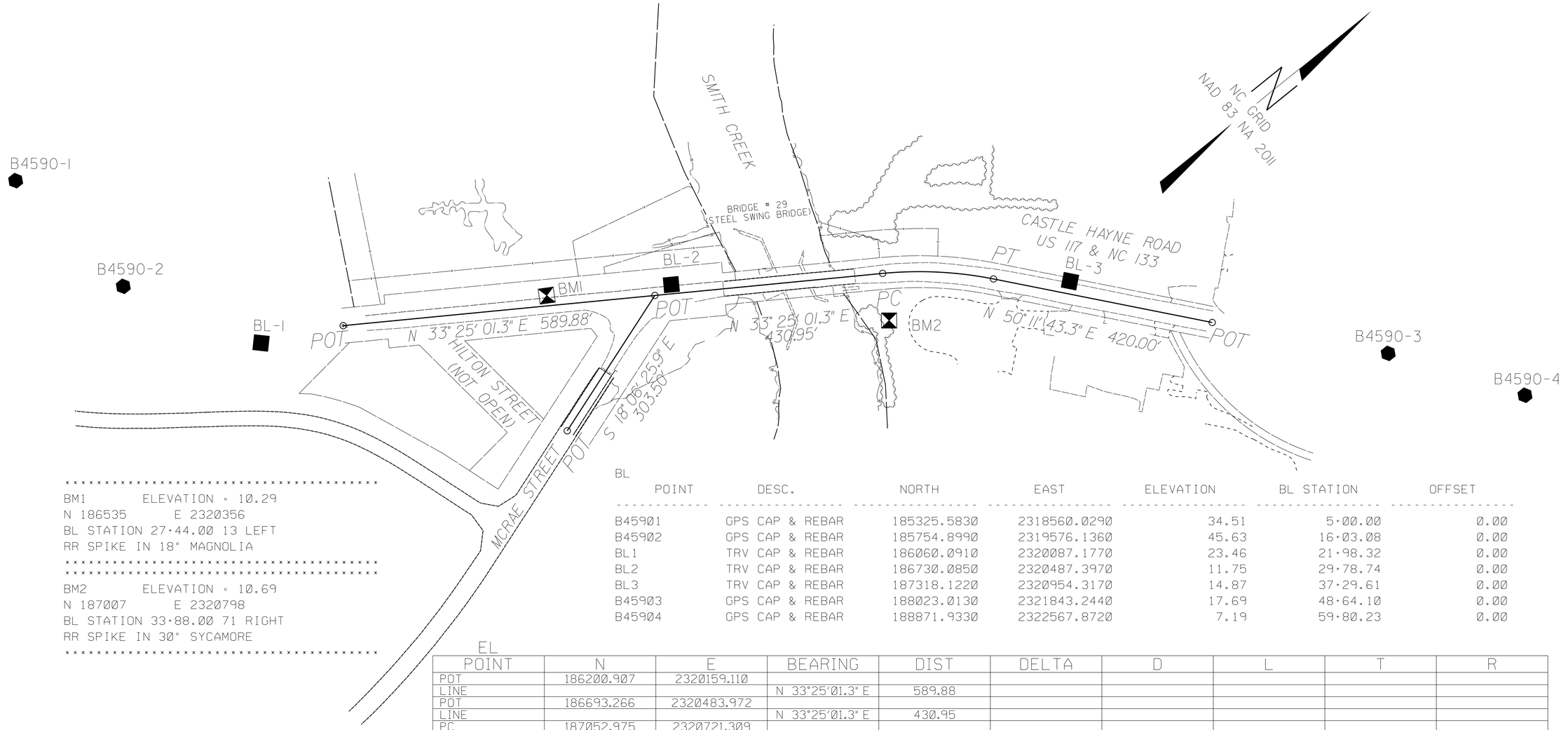


```
**********************************************
BM1       ELEVATION = 10.29
N 186535       E 2320356
BL STATION 27+44.00 13 LEFT
RR SPIKE IN 18" MAGNOLIA
**********************************************
**********************************************
BM2       ELEVATION = 10.69
N 187007       E 2320798
BL STATION 33+88.00 71 RIGHT
RR SPIKE IN 30" SYCAMORE
**********************************************
```

BL

POINT	DESC.	NORTH	EAST	ELEVATION	BL STATION	OFFSET
B45901	GPS CAP & REBAR	185325.5830	2318560.0290	34.51	5+00.00	0.00
B45902	GPS CAP & REBAR	185754.8990	2319576.1360	45.63	16+03.08	0.00
BL1	TRV CAP & REBAR	186060.0910	2320087.1770	23.46	21+98.32	0.00
BL2	TRV CAP & REBAR	186730.0850	2320487.3970	11.75	29+78.74	0.00
BL3	TRV CAP & REBAR	187318.1220	2320954.3170	14.87	37+29.61	0.00
B45903	GPS CAP & REBAR	188023.0130	2321843.2440	17.69	48+64.10	0.00
B45904	GPS CAP & REBAR	188871.9330	2322567.8720	7.19	59+80.23	0.00

EL

POINT	N	E	BEARING	DIST	DELTA	D	L	T	R
POT	186200.907	2320159.110							
LINE			N 33°25'01.3" E	589.88					
POT	186693.266	2320483.972							
LINE			N 33°25'01.3" E	430.95					
PC	187052.975	2320721.309							
CURVE			N 41°48'22.3" E	208.98	16°46'41.7"(RT)	08°00'00.0"	209.73	105.62	716.20
PT	187208.750	2320860.618							
LINE			N 50°11'43.3" E	420.00					
POT	187477.622	2321183.275							

EY

POINT	N	E	BEARING	DIST
POT	186693.266	2320483.972		
LINE			S 18°06'25.9" E	303.50
POT	186404.799	2320578.297		

DATUM DESCRIPTION

THE LOCALIZED COORDINATE SYSTEM DEVELOPED FOR THIS PROJECT IS BASED ON THE STATE PLANE COORDINATES ESTABLISHED BY NCDOT FOR MONUMENT "B5490-2" WITH NAD 83/NA 2011 STATE PLANE GRID COORDINATES OF NORTHING: 185754.899(ft) EASTING: 2319576.136(ft) ELEVATION: 45.63(ft)

THE AVERAGE COMBINED GRID FACTOR USED ON THIS PROJECT (GROUND TO GRID) IS: 1.0000259719

THE N.C. LAMBERT GRID BEARING AND LOCALIZED HORIZONTAL GROUND DISTANCE FROM "B5490-2" TO -L- STATION 10+00.00 IS N 52°34'55.19" E 734.02

ALL LINEAR DIMENSIONS ARE LOCALIZED HORIZONTAL DISTANCES

VERTICAL DATUM USED IS NAVD 88

NOTES:

1. PROJECT CONTROL WAS ESTABLISHED USING GNSS, THE GLOBAL NAVIGATION SATELLITE SYSTEM.
2. THE SURVEY CONTROL DATA FOR THIS PROJECT HAS BEEN COMPILED FROM VARIOUS SOURCES. IF FURTHER INFORMATION REGARDING PROJECT CONTROL IS NEEDED, PLEASE CONTACT THE LOCATION AND SURVEYS UNIT.

REVISIONS 6/2/99

29-JUN-2018 11:47
N:\LocationSurveys\B4590_LS_1C_180627.dgn
$$$$USERNAME$$$$

DocuSign Envelope ID: 067A235F-0381-4EA9-9E6C-859425BCECAB

6/2/99

REVISIONS

PROJECT REFERENCE NO.	SHEET NO.
B-4590	1D
Location and Surveys	

PROPOSED ALIGNMENT CONTROL SHEET B-4590

L

TYPE	STATION	NORTH	EAST
POT	10+00.00	186200.9068	2320159.1103
PC	20+21.00	187053.1223	2320721.4064
PT	22+30.38	187208.6369	2320860.4828
POT	26+50.56	187477.6218	2321183.2754

Y

TYPE	STATION	NORTH	EAST
POT	10+00.00	186693.2663	2320483.9716
POT	13+03.50	186404.7991	2320578.2973

NOTES:

1. PROJECT CONTROL WAS ESTABLISHED USING GNSS, THE GLOBAL NAVIGATION SATELLITE SYSTEM.

2. THE PROPOSED ALIGNMENT CONTROL DATA FOR THIS PROJECT HAS BEEN COMPILED FROM VARIOUS SOURCES. IF FURTHER INFORMATINO REGARDING PROJECT CONTROL IS NEEDED, PLEASE CONTACT THE LOCATION AND SURVEYS UNIT.

29-JUN-2018 11:48
R:\LocationSurveys\B4590_LS_ID_180627.dgn
$$$$USERNAME$$$$

DocuSign Envelope ID: 067A235F-0381-4EA9-9E6C-859425BCECAB

6/2/99

PAVEMENT SCHEDULE

(FINAL PAVEMENT SCHEDULE)

C1	PROP. APPROX. 3" ASPHALT CONCRETE SURFACE COURSE, TYPE S9.5B, AT AN AVERAGE RATE OF 165 LBS. PER SQ. YD. IN EACH OF TWO LAYERS.
C2	PROP. VAR. DEPTH ASPHALT CONCRETE SURFACE COURSE, TYPE S9.5B, AT AN AVERAGE RATE OF 110 LBS. PER SQ. YD. PER 1" DEPTH, TO BE PLACED IN LAYERS NOT TO LESS THAN 1½" IN DEPTH OR GREATER THAN 2" IN DEPTH.
D1	PROP. APPROX. 4" ASPHALT CONCRETE INTERMEDIATE COURSE, TYPE I19.0C, AT AN AVERAGE RATE OF 456 LBS. PER SQ. YD.
D2	PROP. VAR. DEPTH ASPHALT CONCRETE INTERMEDIATE COURSE, TYPE I19.0C, AT AN AVERAGE RATE OF 114 LBS. PER SQ. YD. PER 1" DEPTH, TO BE PLACED IN LAYERS NOT LESS THAN 2½" IN DEPTH OR GREATER THAN 4" IN DEPTH.
E1	PROP. APPROX. 4" ASPHALT CONCRETE BASE COURSE, TYPE B25.0C, AT AN AVERAGE RATE OF 456 LBS. PER SQ. YD.
E2	PROP. APPROX. VAR. DEPTH ASPHALT CONCRETE BASE COURSE, TYPE B25.0C, AT AN AVERAGE RATE OF 114 LBS. PER SQ. YD. PER 1" DEPTH TO BE PLACED IN LAYERS NOT LESS THAN 3" IN DEPTH OR GREATER THAN 5½" IN DEPTH.
R1	SHOULDER BERM GUTTER
T	EARTH MATERIAL
U	EXISTING PAVEMENT
W	VARIABLE DEPTH ASPHALT PAVEMENT (SEE WEDGING DETAIL)

NOTE: ALL PAVEMENT SLOPES ARE 1:1 UNLESS NOTED OTHERWISE

BRIDGE NO. 640029

PROJECT REFERENCE NO.	SHEET NO.
B-4590	2A-1
ROADWAY DESIGN ENGINEER	PAVEMENT DESIGN ENGINEER

NORTH CAROLINA PROFESSIONAL SEAL 046062 ENGINEER CHARLES J. YOUNG 6/5/2021

DOCUMENT NOT CONSIDERED FINAL UNLESS ALL SIGNATURES COMPLETED

RS&H

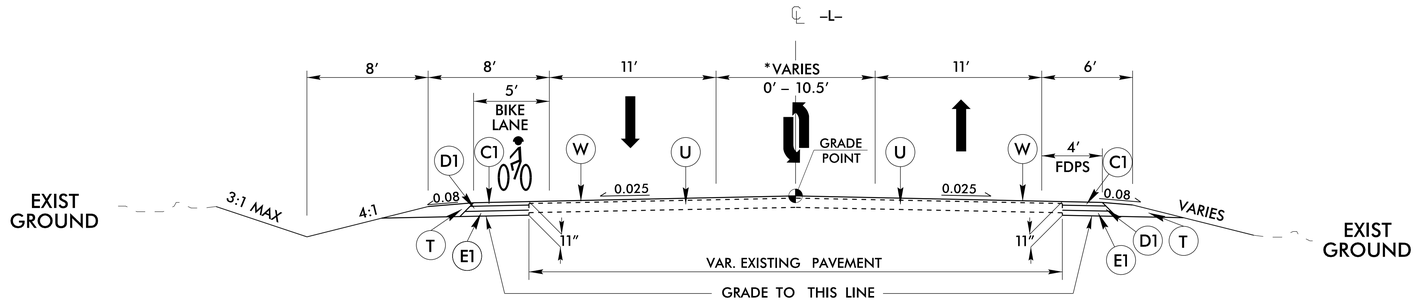

TYPICAL SECTION NO. 1

USE TYPICAL SECTION NO. 1

-L- STA. 14+00.00 TO -L- STA. 15+00.00
*-L- STA. 22+00.00 TO -L- STA. 22+50.00

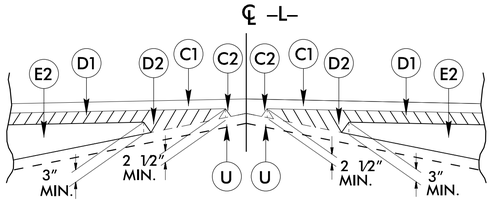

STANDARD WEDGING DETAIL

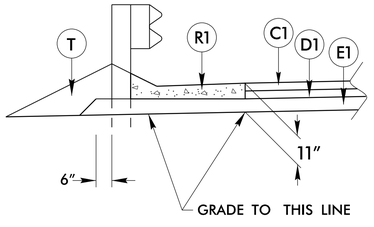

SHOULDER BERM GUTTER DETAIL

-L- STA. 16+88.83 TO -L- STA. 16+98.83 LT
-L- STA. 19+90.17 TO -L- STA. 20+00.17 LT

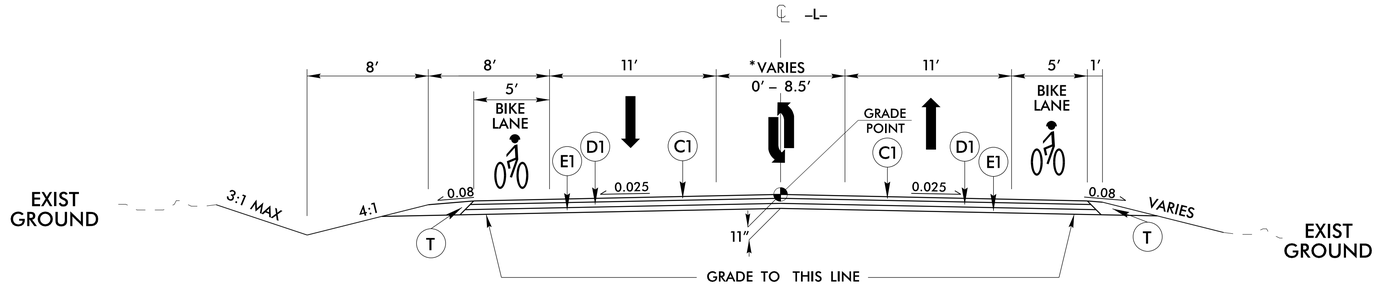

TYPICAL SECTION NO. 2

USE TYPICAL SECTION NO. 2

-L- STA. 15+00.00 TO -L- STA. 16+00.00
*-L- STA. 21+00.00 TO -L- STA. 22+00.00

09-JAN-2020 09:57
R:\Roadway\Proj\640029_Rdy_typ.dgn
$$$$USERNAME$$$$

DocuSign Envelope ID: 067A235F-0381-4EA9-9E6C-859425BCECAB

6/2/99

PAVEMENT SCHEDULE

(FINAL PAVEMENT SCHEDULE)

C1	PROP. APPROX. 3″ ASPHALT CONCRETE SURFACE COURSE, TYPE S9.5B, AT AN AVERAGE RATE OF 165 LBS. PER SQ. YD. IN EACH OF TWO LAYERS.
C2	PROP. VAR. DEPTH ASPHALT CONCRETE SURFACE COURSE, TYPE S9.5B, AT AN AVERAGE RATE OF 110 LBS. PER SQ. YD. PER 1″ DEPTH, TO BE PLACED IN LAYERS NOT TO LESS THAN 1½″ IN DEPTH OR GREATER THAN 2″ IN DEPTH.
D1	PROP. APPROX. 4″ ASPHALT CONCRETE INTERMEDIATE COURSE, TYPE I19.0C, AT AN AVERAGE RATE OF 456 LBS. PER SQ. YD.
D2	PROP. VAR. DEPTH ASPHALT CONCRETE INTERMEDIATE COURSE, TYPE I19.0C, AT AN AVERAGE RATE OF 114 LBS. PER SQ. YD. PER 1″ DEPTH, TO BE PLACED IN LAYERS NOT LESS THAN 2½″ IN DEPTH OR GREATER THAN 4″ IN DEPTH.
E1	PROP. APPROX. 4″ ASPHALT CONCRETE BASE COURSE, TYPE B25.0C, AT AN AVERAGE RATE OF 456 LBS. PER SQ. YD.
E2	PROP. APPROX. VAR. DEPTH ASPHALT CONCRETE BASE COURSE, TYPE B25.0C, AT AN AVERAGE RATE OF 114 LBS. PER SQ. YD. PER 1″ DEPTH TO BE PLACED IN LAYERS NOT LESS THAN 3″ IN DEPTH OR GREATER THAN 5½″ IN DEPTH.
R1	SHOULDER BERM GUTTER
T	EARTH MATERIAL
U	EXISTING PAVEMENT
W	VARIABLE DEPTH ASPHALT PAVEMENT (SEE WEDGING DETAIL)

NOTE: ALL PAVEMENT SLOPES ARE 1:1 UNLESS NOTED OTHERWISE

BRIDGE NO. 640029

PROJECT REFERENCE NO.	SHEET NO.
B-4590	2A-2

ROADWAY DESIGN ENGINEER

NORTH CAROLINA PROFESSIONAL ENGINEER SEAL 046062 CHARLES I YOUNG
Charles I. Young
6/5/2021

PAVEMENT DESIGN ENGINEER

DOCUMENT NOT CONSIDERED FINAL UNLESS ALL SIGNATURES COMPLETED

RS&H

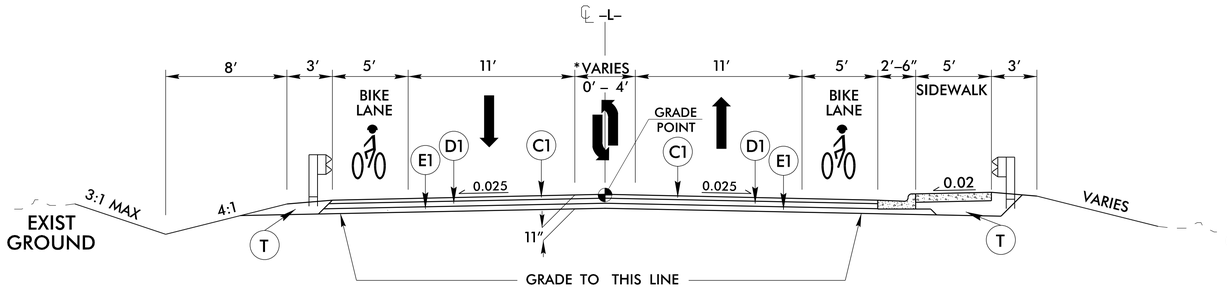

TYPICAL SECTION NO. 3

USE TYPICAL SECTION NO. 3

–L– STA. 16+00.00 TO –L– STA. 17+13.00
*–L– STA. 19+76.00 TO –L– STA. 21+00.00

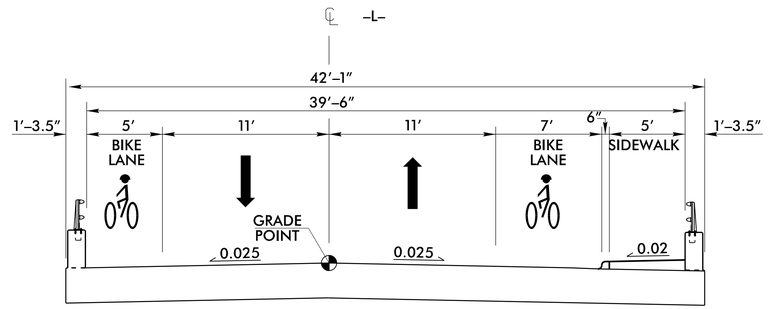

TYPICAL SECTION NO. 4

USE TYPICAL SECTION NO. 4

–L– STA. 17+13.00 TO –L– STA. 19+76.00

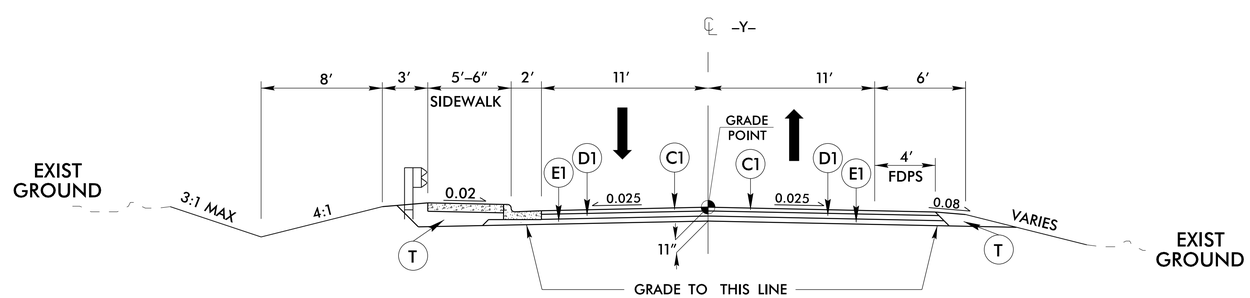

TYPICAL SECTION NO. 5

USE TYPICAL SECTION NO. 5

–Y– STA. 10+14.05 TO –Y– STA. 10+90.00

09-JAN-2020 09:58
$$$$USERNAME$$$$
$$$$USERNAME$$$$

DocuSign Envelope ID: 067A235F-0381-4EA9-9E6C-859425BCECAB

5/14/99

PROJECT REFERENCE NO.	SHEET NO.
B-4590	2B-1

STATE OF
NORTH CAROLINA
DEPT. OF TRANSPORTATION
DIVISION OF HIGHWAYS
RALEIGH, N.C.

ENGLISH DETAIL DRAWING FOR
METHOD OF CLEARING
MODIFIED METHOD - III

SHEET 1 OF 1
200D03

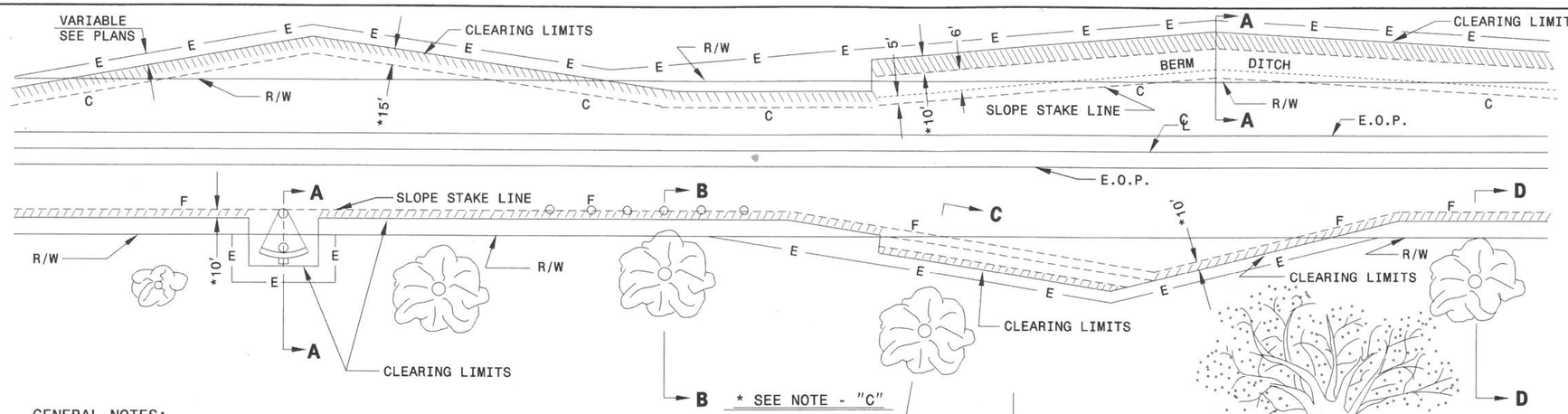

GENERAL NOTES:

1. REMOVE TREES OUTSIDE THE CLEARING LIMIT WHEN, IN THE OPINION OF THE ENGINEER, THE UTILITY OF A TREE WILL BE DESTROYED BY THE CONSTRUCTION OR THE CLEARING OPERATION.
2. CLEAR IN ACCORDANCE WITH THIS STANDARD EXCEPT WHERE ADDITIONAL CLEARING IS REQUIRED FOR SAFETY AS SHOWN ON THE PLANS.

METHOD III CLEARING LIMITS

(A) CUTS -- CLEAR TO CONSTRUCTION LIMITS.
(B) FILLS - CLEAR TO 5'/10' * BEYOND CONSTRUCTION LIMITS, UNLESS SPECIFIED OTHERWISE BY WETLAND PERMIT.
(C) CUTS AND FILLS - WHEN THE CLEARING LIMITS (A AND B) EXCEED THE PROPOSED R/W OR PROPOSED CONSTRUCTION EASEMENTS, THEN CLEAR ONLY TO THE R/W OR CONSTRUCTION EASEMENT WHICHEVER IS GREATER.

* FOR FILL HEIGHTS LESS THAN 10' CLEAR TO 5' BEYOND CONSTRUCTION LIMITS.
* FOR FILL HEIGHTS 10' OR GREATER CLEAR TO 10' BEYOND CONSTRUCTION LIMITS.
** PLACE SILT FENCE AT 5' BEYOND TOE OF SLOPE IN FILL SECTIONS WITH LESS THAN 10'. PLACE SILT FENCE AT 10' BEYOND TOE OF SLOPE IN FILL SECTIONS WITH 10' OR GREATER.

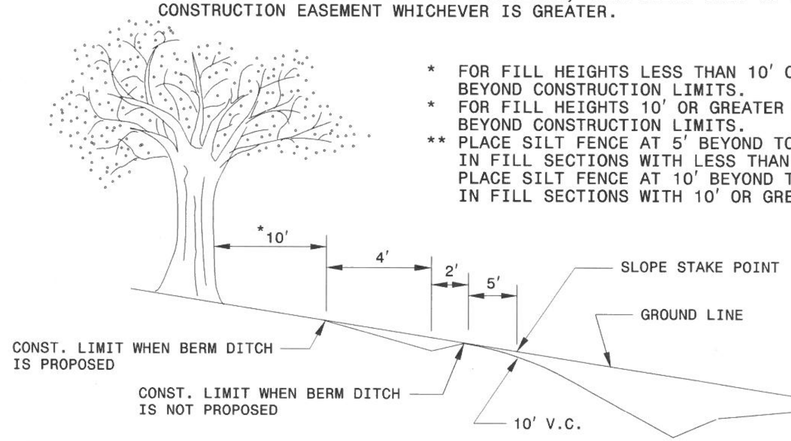

SECTION A-A

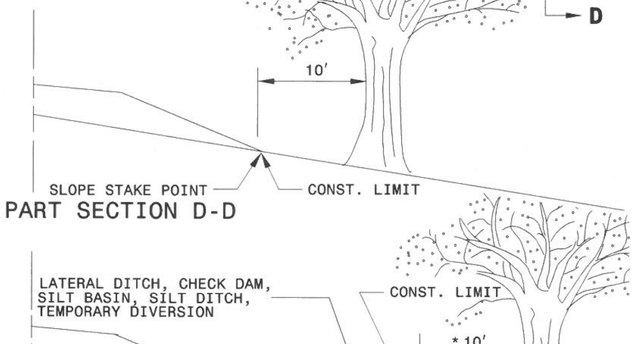

PART SECTION D-D

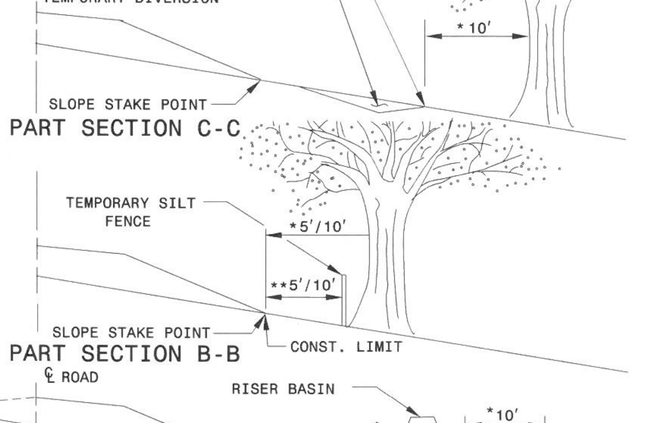

PART SECTION C-C

PART SECTION B-B

STATE OF
NORTH CAROLINA
DEPT. OF TRANSPORTATION
DIVISION OF HIGHWAYS
RALEIGH, N.C.

ENGLISH DETAIL DRAWING FOR
METHOD OF CLEARING
MODIFIED METHOD

SHEET 1 OF 1
200D03

CONTRACT STANDARDS
AND DEVELOPMENT UNIT
Office 919-707-6950 FAX 919-250-4119

SEE TITLE BLOCK

ORIGINAL BY:	T.S.S.	DATE:	FEB.2000
MODIFIED BY:	K.A.K.	DATE:	AUG.2016
CHECKED BY:		DATE:	
FILE SPEC.:	kkempf/english/0200d301.dgn		

$$$$SYSTIM$$$$
$$$$USERNAME$$$$

DocuSign Envelope ID: 067A235F-0381-4EA9-9E6C-859425BCECAB

PROJECT REFERENCE NO.	SHEET NO.
B-4590	2C-1

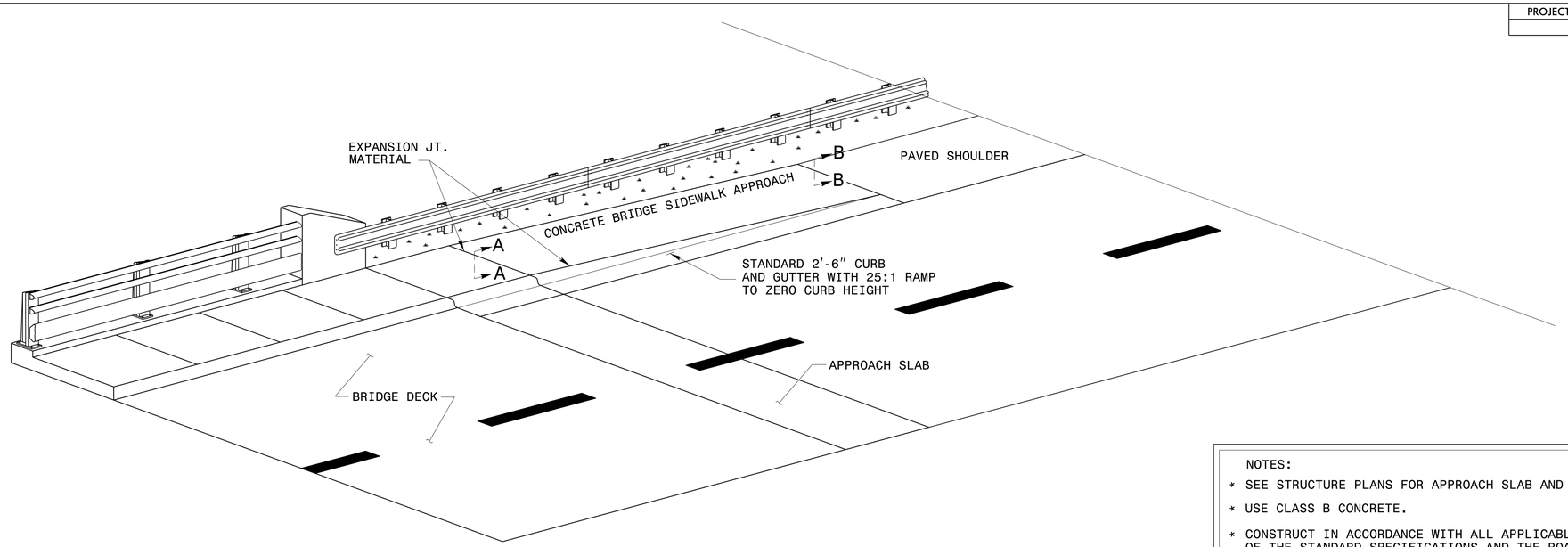

DETAIL OF PROPOSED CONCRETE BRIDGE SIDEWALK APPROACH

NOTES:

* SEE STRUCTURE PLANS FOR APPROACH SLAB AND CURB DIMENSIONS.
* USE CLASS B CONCRETE.
* CONSTRUCT IN ACCORDANCE WITH ALL APPLICABLE REQUIREMENTS OF THE STANDARD SPECIFICATIONS AND THE ROADWAY DRAWINGS OR AS DIRECTED BY THE ENGINEER.
* DETERMINE WIDTH OF PROPOSED BRIDGE SIDEWALK APPROACH IN FIELD TO MATCH WALKWAY ON BRIDGE AND APPROACH SLAB OR AS DIRECTED BY THE ENGINEER.
* SEE ROADWAY PLANS FOR GUARDRAIL PLACEMENT.

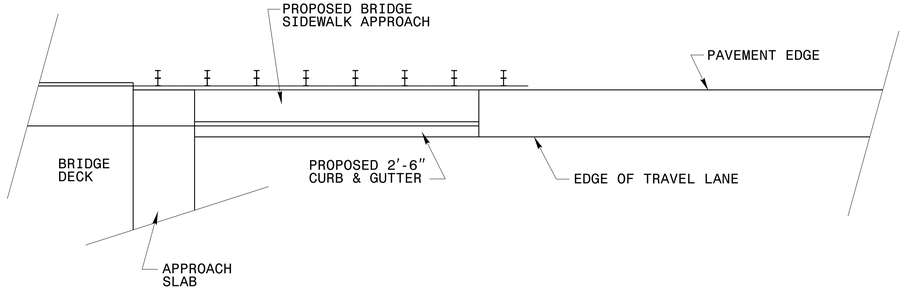

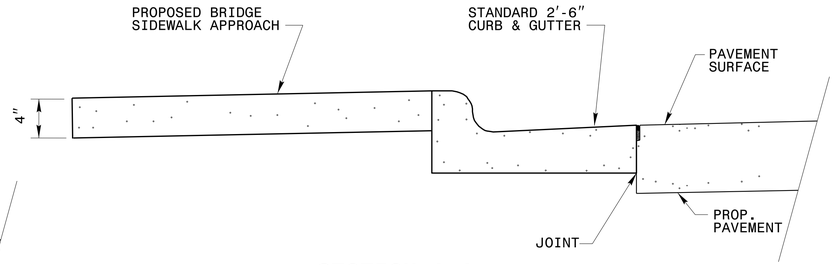

SECTION A-A

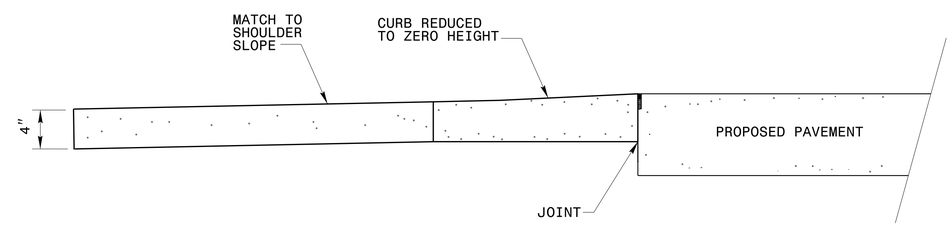

SECTION B-B

NORTH CAROLINA PROFESSIONAL SEAL 022966 ENGINEER Joel S. Howerton
6/5/2021

DOCUMENT NOT CONSIDERED FINAL UNLESS ALL SIGNATURES COMPLETED

CONTRACT STANDARDS & DEVELOPMENT UNIT
STANDARDS AND SPECIAL DESIGN
Office 919-707-6950 FAX 919-250-4119

DETAIL OF CONCRETE BRIDGE SIDEWALK APPROACH

ORIGINAL BY: _____ DATE: _____
MODIFIED BY: rnbritt DATE: 10-12-04
CHECKED BY: _____ DATE: _____
FILE SPEC.: details/nbritt/metric/misc/sidewalkapproach.dgn

6/10/99

05-FEB-2019 14:31
S:\Contracts\Contracts\Special Details\jhowerton\Bridge Approach Sidewalk Transition.dgn
jhowerton AT CSD-292595

DocuSign Envelope ID: 067A235F-0381-4EA9-9E6C-859425BCECAB

PROJECT REFERENCE NO.	SHEET NO.
B-4590	2C-2

STATE OF
NORTH CAROLINA
DEPT. OF TRANSPORTATION
DIVISION OF HIGHWAYS
RALEIGH, N.C.

ROADWAY DETAIL DRAWING FOR
STRUCTURE ANCHOR UNITS
GUARDRAIL ANCHOR UNIT, TYPE III FOR ATTACHMENT TO RAIL ON BRIDGE - SUB REGIONAL TIER

SHEET 2 OF 7
862D03

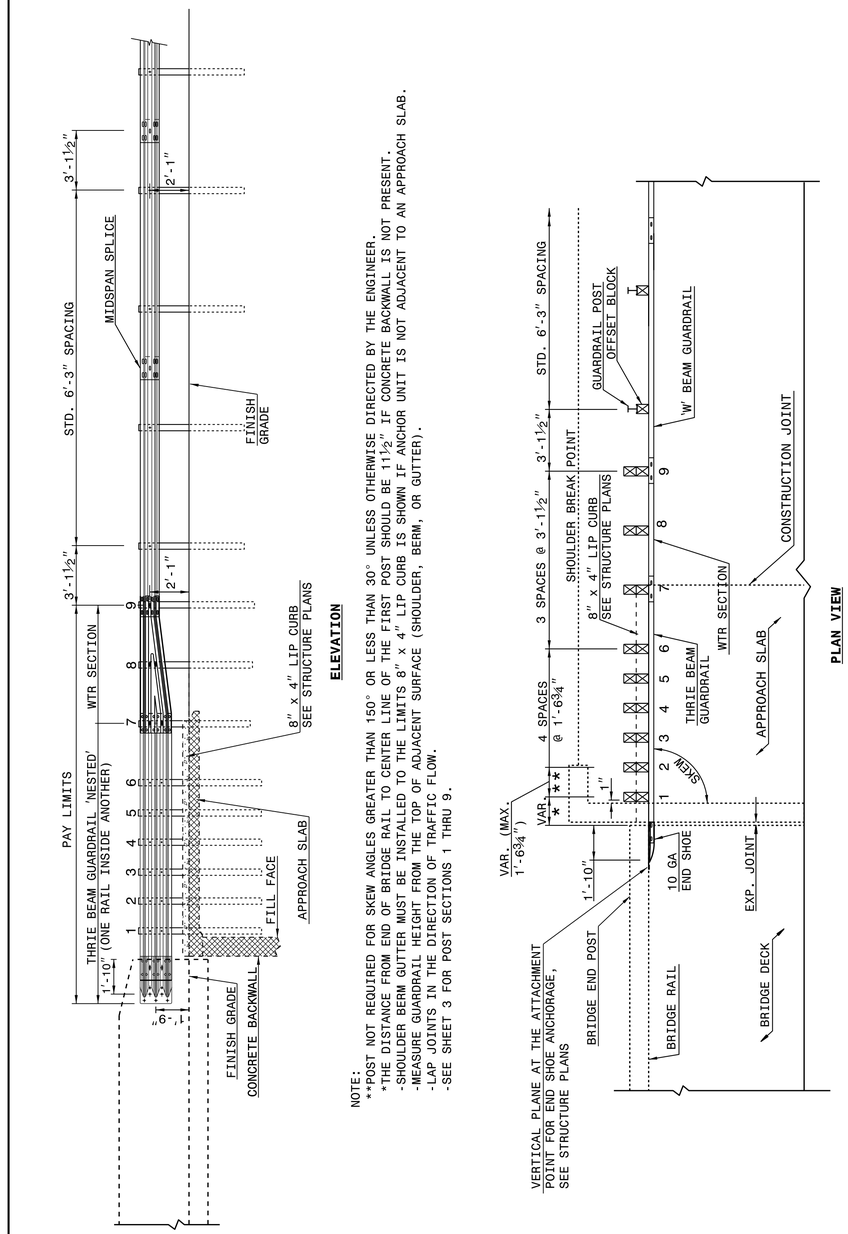

ELEVATION

PLAN VIEW

NOTE:
**POST NOT REQUIRED FOR SKEW ANGLES GREATER THAN 150° OR LESS THAN 30° UNLESS OTHERWISE DIRECTED BY THE ENGINEER.
*THE DISTANCE FROM END OF BRIDGE RAIL TO CENTER LINE OF THE FIRST POST SHOULD BE 11½" IF CONCRETE BACKWALL IS NOT PRESENT.
-SHOULDER BERM GUTTER MUST BE INSTALLED TO THE LIMITS 8" x 4" LIP CURB IS SHOWN IF ANCHOR UNIT IS NOT ADJACENT TO AN APPROACH SLAB.
-MEASURE GUARDRAIL HEIGHT FROM THE TOP OF ADJACENT SURFACE (SHOULDER, BERM, OR GUTTER).
-LAP JOINTS IN THE DIRECTION OF TRAFFIC FLOW.
-SEE SHEET 3 FOR POST SECTIONS 1 THRU 9.

GUARDRAIL ANCHOR UNIT, TYPE III FOR ATTACHMENT TO RAIL ON BRIDGE - SUB REGIONAL TIER

STATE OF
NORTH CAROLINA
DEPT. OF TRANSPORTATION
DIVISION OF HIGHWAYS
RALEIGH, N.C.

ROADWAY DETAIL DRAWING FOR
STRUCTURE ANCHOR UNITS
GUARDRAIL ANCHOR UNIT, TYPE III FOR ATTACHMENT TO RAIL ON BRIDGE

SHEET 1 OF 7
862D03

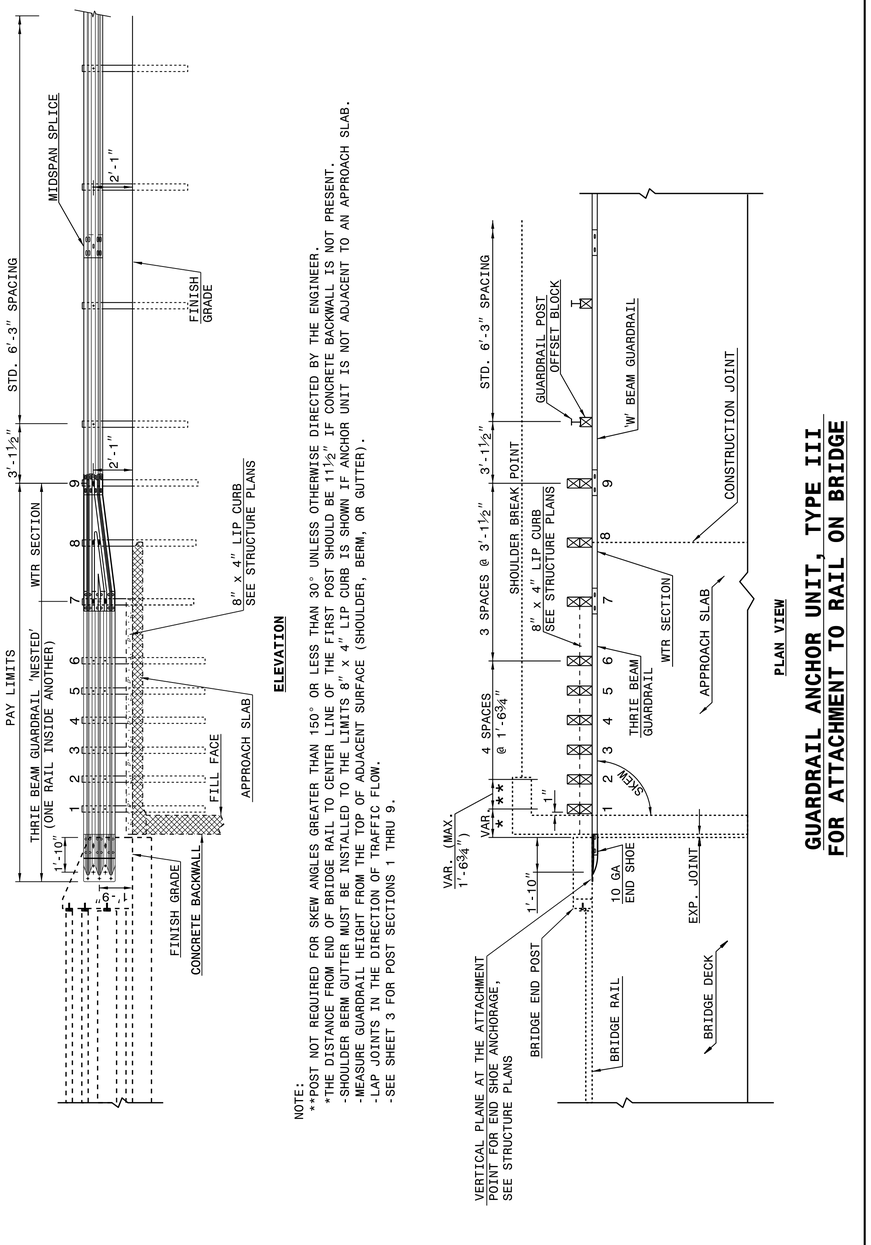

ELEVATION

PLAN VIEW

NOTE:
**POST NOT REQUIRED FOR SKEW ANGLES GREATER THAN 150° OR LESS THAN 30° UNLESS OTHERWISE DIRECTED BY THE ENGINEER.
*THE DISTANCE FROM END OF BRIDGE RAIL TO CENTER LINE OF THE FIRST POST SHOULD BE 11½" IF CONCRETE BACKWALL IS NOT PRESENT.
-SHOULDER BERM GUTTER MUST BE INSTALLED TO THE LIMITS 8" x 4" LIP CURB IS SHOWN IF ANCHOR UNIT IS NOT ADJACENT TO AN APPROACH SLAB.
-MEASURE GUARDRAIL HEIGHT FROM THE TOP OF ADJACENT SURFACE (SHOULDER, BERM, OR GUTTER).
-LAP JOINTS IN THE DIRECTION OF TRAFFIC FLOW.
-SEE SHEET 3 FOR POST SECTIONS 1 THRU 9.

GUARDRAIL ANCHOR UNIT, TYPE III FOR ATTACHMENT TO RAIL ON BRIDGE

STATE OF
NORTH CAROLINA
DEPT. OF TRANSPORTATION
DIVISION OF HIGHWAYS
RALEIGH, N.C.

ROADWAY DETAIL DRAWING FOR
STRUCTURE ANCHOR UNITS
GUARDRAIL ANCHOR UNIT, TYPE III FOR ATTACHMENT TO RAIL ON BRIDGE

SHEET 1 OF 7
862D03

14-DEC-2017 10:36
S:\Contracts\Contracts\Special Details\jhowerton\Standard Drawings\2018 Standard Drawings\Details in Lieu of Standards\Division 8\0862d0301.dgn
jhowerton AT CSD-2425965

NORTH CAROLINA
PROFESSIONAL ENGINEER
SEAL
022966
Joel S. Howerton
ENGINEER
Joel S. Howerton
6/5/2021

DOCUMENT NOT CONSIDERED FINAL UNLESS ALL SIGNATURES COMPLETED

CONTRACT STANDARDS
AND DEVELOPMENT UNIT
Office 919-707-6950 FAX 919-250-4119

SEE TITLE BLOCK

ORIGINAL BY: J HOWERTON DATE: 06-22-12
MODIFIED BY: _____ DATE: _____
CHECKED BY: _____ DATE: _____
FILE SPEC.: _____

DocuSign Envelope ID: 067A235F-0381-4EA9-9E6C-859425BCECAB

PROJECT REFERENCE NO.	SHEET NO.
B-4590	2C-3

DOCUMENT NOT CONSIDERED FINAL UNLESS ALL SIGNATURES COMPLETED

STATE OF NORTH CAROLINA
DEPT. OF TRANSPORTATION
DIVISION OF HIGHWAYS
RALEIGH, N.C.

ROADWAY DETAIL DRAWING FOR
GUARDRAIL INSTALLATION

SHEET 6 OF 8
862D02

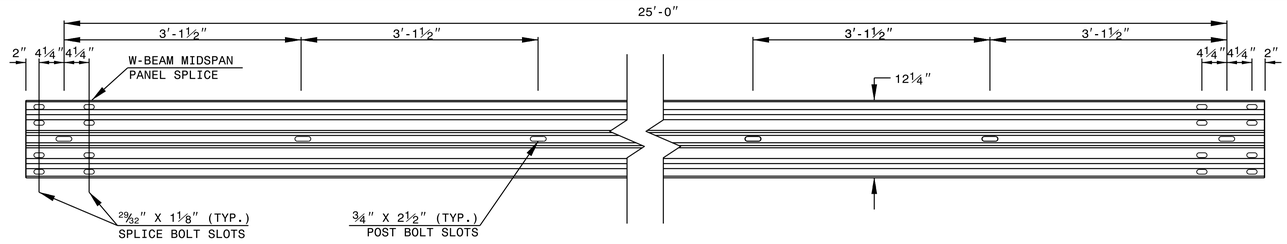

STANDARD W-BEAM GUARDRAIL

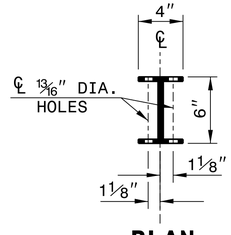

PLAN

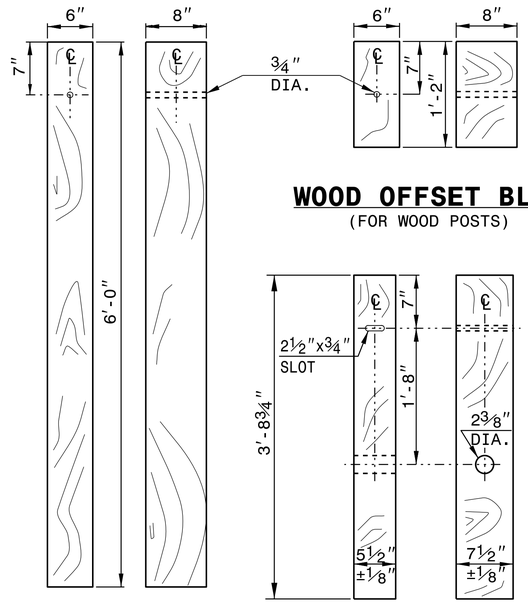

WOOD OFFSET BLOCK
(FOR WOOD POSTS)

STANDARD LINE POST

SHORT WOOD BREAKAWAY POST

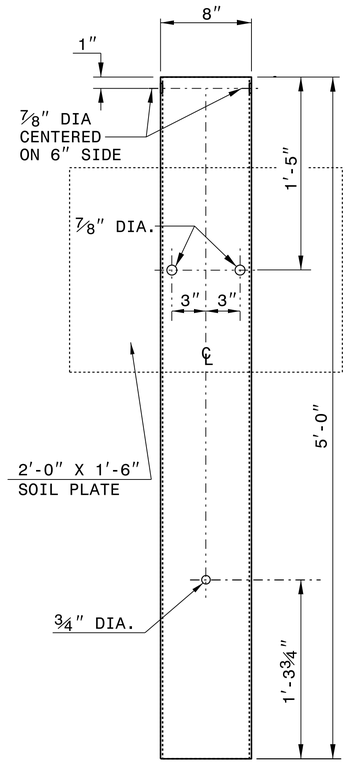

STEEL TUBE
TS 6"x8"x0.1875"

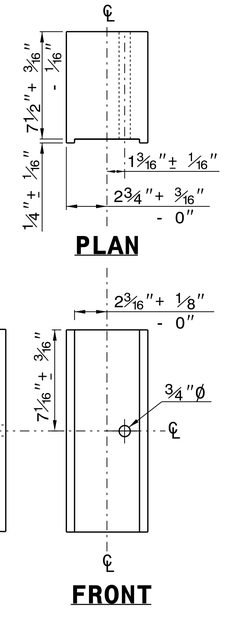

PLAN

SIDE **FRONT**

ROUTED OFFSET BLOCK

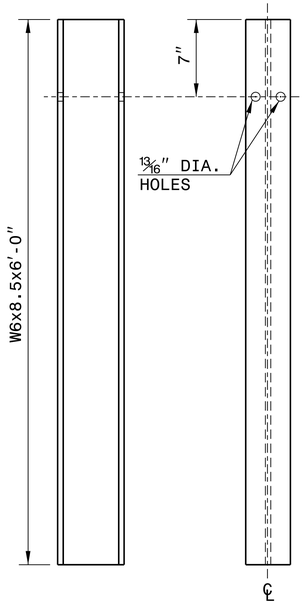

SIDE **FRONT**

"W6" STEEL POST

SYSTEM PARTS

STATE OF
NORTH CAROLINA
DEPT. OF TRANSPORTATION
DIVISION OF HIGHWAYS
RALEIGH, N.C.

ROADWAY DETAIL DRAWING FOR
GUARDRAIL INSTALLATION

SHEET 6 OF 8
862D02

6/5/2021

CONTRACTS STANDARDS AND DEVELOPMENT UNIT
Office 919-707-6950 FAX 919-250-4119

SEE TITLE BLOCK

ORIGINAL BY: J.HOWERTON DATE: 3-7-2018
MODIFIED BY: DATE:
CHECKED BY: DATE:
FILE SPEC.:

DocuSign Envelope ID: 067A235F-0381-4EA9-9E6C-859425BCECAB

PROJECT REFERENCE NO.	SHEET NO.
B-4590	2G-1

GEOTECHNICAL ENGINEER

NORTH CAROLINA PROFESSIONAL SEAL 032171 ENGINEER JINYOUNG PARK

DocuSigned by: 1/31/2019
SIGNATURE DATE

ENGINEER

SIGNATURE DATE

DOCUMENT NOT CONSIDERED FINAL UNLESS ALL SIGNATURES COMPLETED

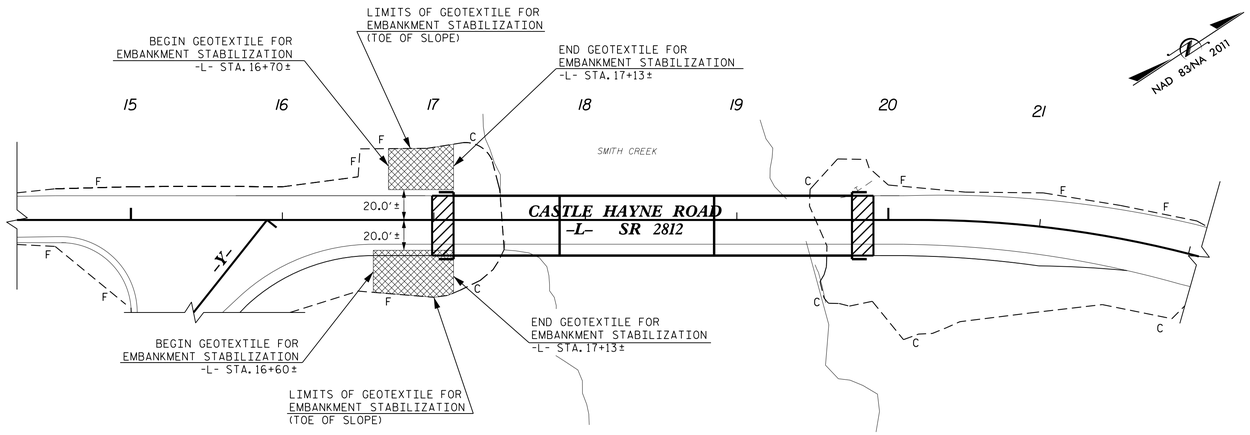

PLAN VIEW
N.T.S.

AREA OF GEOTEXTILE FOR EMBANKMENT STABILIZATION, MACHINE OR ROLL DIRECTION PERPENDICULAR TO EMBANKMENT CENTERLINE

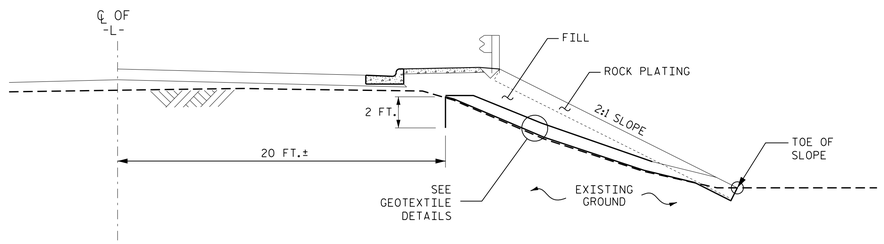

TYPICAL CROSS SECTION
N.T.S.

NOTES

1. DO NOT GRUB, ONLY CLEAR THE AREA WITHIN THE LIMITS OF THE GEOTEXTILE FOR EMBANKMENT STABILIZATION.
2. PLACE GEOTEXTILE FOR EMBANKMENT STABILIZATION PERPENDICULAR TO EMBANKMENT CENTERLINE ON THE EXISTING GROUND AS SHOWN IN THE PLAN OR AS DIRECTED BY THE ENGINEER.
3. PLACE THE GEOTEXTILE WITHOUT ANY WRINKLES OR CREASES.
4. PLACE 2 FT. OF SELECT GRANULAR MATERIAL ON THE GEOTEXTILE FOR EMBANKMENT STABILIZATION.
5. NO SEAMS OR JOINTS ARE ALLOWED IN THE MACHINE DIRECTION OF GEOTEXTILE.
6. THE TERMS ROLL AND MACHINE DIRECTION ARE USED INTERCHANGEABLY.
7. ALL JOINTS IN THE CROSS MACHINE DIRECTION MUST BE OVERLAPPED A MINMUM OF 18 INCHES.
8. FOR GEOTEXTILE FOR EMBANKMENT STABILIZATION, SEE GEOTEXTILE FOR EMBANKMENT STABILIZATION SPECIAL PROVISION.

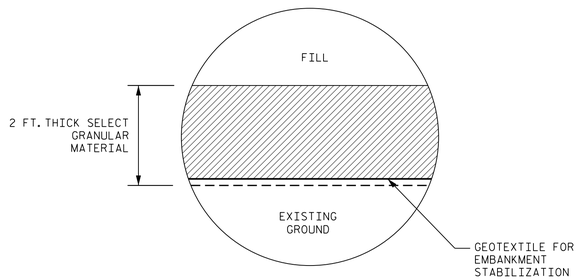

GEOTEXTILE DETAILS
N.T.S.

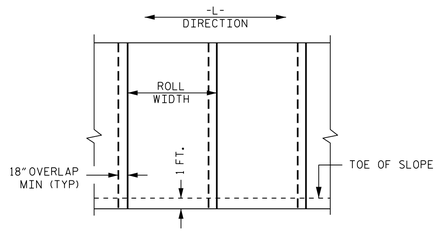

GEOTEXTILE OVERLAP DETAIL
(PLAN VIEW, N.T.S.)

QUANTITIES

GEOTEXTILE FOR EMBANKMENT STABILIZATION	350 SY*
SELECT GRANULAR MATERIAL	200 CY

* GEOTEXTILE FOR EMBANKMENT STABILIZATION ESTIMATED QUANTITY DOES NOT INCLUDE OVERLAPS OR WASTE.

PREPARED BY: J. PARK	DATE: 05/2018
REVIEWED BY: J. BATTS	DATE: 05/2018

NORTH CAROLINA DEPARTMENT OF TRANSPORTATION DIVISION OF HIGHWAYS

GEOTECHNICAL ENGINEERING UNIT

GEOTEXTILE FOR EMBANKMENT STABILIZATION DETAILS

REVISIONS

NO.	BY	DATE	NO.	BY	DATE
1	J. PARK	01 / 2019	3		
2			4		

DocuSign Envelope ID: 067A235F-0381-4EA9-9E6C-859425BCECAB

12/06/07

COMPUTED BY: MLK DATE: 10/30/2018
CHECKED BY: CJY DATE: 06/04/2021

STATE OF NORTH CAROLINA
DIVISION OF HIGHWAYS

PROJECT REFERENCE NO.	SHEET NO.
B-4590	3B-1

SUMMARY OF EARTHWORK

STATION	STATION	UNCL. EXCAV.	EMBANK.	BORROW	WASTE
–L– STA. 14+00.00	–L– STA. 17+13.00	20	600	580	
–L– STA. 19+76.00	–L– STA. 22+50.00	296	285		11
SUBTOTALS:		316	885	580	311
–Y– STA. 10+14.05	–Y– STA. 10+90.00	72	46		26
SUBTOTALS:		72	46		25
TOTALS:		388	931	580	336
MATERIAL FOR SHLDR. CONST.:			288	288	
WASTE IN LIEU OF BORROW					–36
PROJECT TOTALS:		388	1,219	832	300
EST. 5% TO REPLACE SOIL IN BORROW PIT				42	
GRAND TOTALS:		388	1,219	873	300
SAY:		466		880	

*GEOTECHNICAL QUANTITIES PROVIDED BY NCDOT: UNDERCUT EXCAVATION = 200 CY (CONTINGENCY)
SELECT GRANULAR MATERIAL = 500 CY (CONTINGENCY)
GEOTEXTILE FOR SOIL STABILIZATION = 300 SY (CONTINGENCY)
6" PERFORATED SUBDRAIN PIPE = 200 LF (CONTINGENCY)
ROCK PLATING = 1100 SY
GEOTEXTILE FOR ROCK EMBANKMENTS = 350 SY

PAVEMENT REMOVAL SUMMARY

SURVEY LINE	STATION	STATION	LOCATION LT/RT/CL	YD^2
–L–	14+58.78	14+82.91	RT	2.15
–L–	15+00.00	14+82.91	CL	1311.35
–L–	19+68.27	22+00.00	CL	888.99
			TOTAL:	2,202.49
			SAY:	2,210.00

SHOULDER BERM GUTTER SUMMARY

SURVEY LINE	STATION	STATION	LENGTH
–L– (LT)	16+88.83	16+98.83	10.00'
–L– (LT)	19+90.17	20+00.17	10.00'
		TOTAL:	20.00'
		SAY:	30.00'

LIST OF PIPES, ENDWALLS, ETC. (FOR PIPES 48" & UNDER)

| STATION | LOCATION (LT,RT, OR CL) | STRUCTURE NO. FROM | STRUCTURE NO. TO | TOP ELEVATION | INVERT ELEVATION | INVERT ELEVATION | SLOPE CRITICAL | DRAINAGE PIPE (CAAP ONLY) SIZE 12" | 15" | 18" | 24" | 30" | 36" | 42" | 48" | C.S. PIPE (UNLESS NOTED OTHRWISE) THICKNESS OR GAUGE 12" | 15" | 18" | 24" | 30" | 36" | 42" | 48" | CLASS III R.C. PIPE (UNLESS OTHERWISE NOTED) 12" | 15" | 18" | 24" | 30" | 36" | 42" | 48" | 15" SIDE DRAIN PIPE | 18" SIDE DRAIN PIPE | 24" SIDE DRAIN PIPE | ENDWALLS STD. 838.01, STD. 838.11 OR STD. 838.80 (UNLESS NOTED OTHERWISE) R.C.P. | C.S.P. | QUANTITIES FOR DRAINAGE STRUCTURES * TOTAL L.F. FOR PAY QUANTITY SHALL BE COL. A + (1.3 X COL. B*) CU. YDS. PER EACH (0' THRU 5.0') | 5.0' THRU 10.0' | 10.0' AND ABOVE | LIN. *FT. A | B | C.B. STD. 840.01 OR STD. 840.02 | FRAME, GRATES AND HOOD STANDARD 840.03 TYPE OF GRATE E | F | G | D.I. STD. 840.14 OR STD. 840.15 | D.I. FRAME & GRATE STD. 840.16 | G.D.I. TYPE "A" STD. 840.17 OR 840.26 | G.D.I. TYPE "B" STD. 840.18 OR 840.27 | G.D.I. TYPE "D" STD. 840.19 OR 840.28 | G.D.I. FRAME WITH GRATE STD. 840.22 | G.D.I. FRAME WITH TWO GRATES STD. 840.22 | G.D.I. (N.S.) FRAME WITH GRATE STD. 840.24 | G.D.I. (N.S.) FRAME WITH TWO GRATES STD. 840.24 | T.B.G.D.I. STD. 840.35 | 15" CORR STEEL ELBOW | FRAMES AND NARROW SLOT FLAT GRATES STD. 840.29 | 15" CAAP ELBOW | CONC. COLLARS CL. "B" C.Y. STD 840.72 | CONC. & BRICK PIPE PLUG, C.Y. STD. 840.71 | PIPE REMOVAL LIN.FT. | REMARKS |
|---|---|---|---|---|---

DocuSign Envelope ID: 067A235F-0381-4EA9-9E6C-859425BCECAB

COMPUTED BY: J. PARK DATE: 01/31/19
CHECKED BY: _____ DATE: _____

(5-15-18)

PROJECT NO.	SHEET NO.
B-4590	3G-1

STATE OF NORTH CAROLINA
DIVISION OF HIGHWAYS

SUMMARY OF SUBSURFACE DRAINAGE

LINE	Station	Station	Location LT/RT/CL	Drain Type* UD/BD/SD	LF
CONTINGENCY				SD	200
				TOTAL LF:	200

*UD = Underdrain
*BD = Blind Drain
*SD = Subsurface Drain

SUMMARY OF GEOTEXTILE FOR PAVEMENT STABILIZATION

LINE	Station	Station	Geotextile for Pavement Stabilization SY	Class IV Subgrade Stabilization TONS
CONTINGENCY				
		TOTAL SY/TONS:	0	0*

*Total tons of "Class IV Subgrade Stabilization" is only the estimated quantity for pavement stabilization and may only represent a portion of the subgrade stabilization quantity shown in the Item Sheets of the Proposal.

SUMMARY OF AGGREGATE SUBGRADE/STABILIZATION

LINE	Station	Station	Aggregate Type* ASU(1/2)/ AST	Aggregate Thickness INCHES [8" for ASU(2)]	Shallow Undercut CY	Class IV Subgrade Stabilization TONS	Geotextile for Soil Stabilization SY	Stabilizer Aggregate TONS	Class IV Aggregate Stabilization TONS
CONTINGENCY									
			TOTAL CY/TONS/SY:		0	0**	0**	0	0

*ASU(1/2) = Aggregate Subgrade (Type 1 or 2)
*AST = Aggregate Stabilization
**Total tons of "Class IV Subgrade Stabilization" and total square yards of "Geotextile for Soil Stabilization" are only the estimated quantities for ASU(1/2)/AST and may only represent a portion of the subgrade stabilization and geotextile quantities shown in the Item Sheets of the Proposal.

SUMMARY OF ROCK PLATING

LINE	Beginning Slope (H:V)	Approx. Station	Ending Slope (H:V)	Approx. Station	Location LT/RT	Rock Plating Detail No. 1/2/3/4	Riprap Class* 1/2/B	Rock Plating SY
-Y-	2:1	10+14±	2.5:1	11+50±	LT	1, 2	2	370
-L-	2:1	16+25±	2:1	16+99±	RT	1, 2	2	210
-L-	2.5:1	16+60±	2:1	16+99±	LT	1	2	110
-L-	2:1	19+90±	2.5:1	21+25±	RT	1	2	410
							TOTAL SY:	1100

*Use Class 1, 2 or B riprap if riprap class is not shown for rock plating location.

SUMMARY OF REINFORCED SOIL SLOPES AND SLOPE EROSION CONTROL

LINE	Beginning Slope/ RSS (H:V)	Approx. Station	Ending Slope/ RSS (H:V)	Approx. Station	Location LT/RT	Reinforced Soil Slope (RSS) SY	Geocells SY	Coir Fiber Mat SY	Matting for Erosion Control SY
					TOTAL SY:	0	0	0*	0**

*Total square yards of "Coir Fiber Mat" is only the estimated quantity for slopes steeper than 2:1 (H:V) and may only represent a portion of the coir fiber mat quantity shown in the Item Sheets of the Proposal.
**Total square yards of "Matting for Erosion Control" is only the estimated quantity for RSS and may only represent a portion of the matting quantity shown in the Item Sheets of the Proposal.

SUMMARY OF PRE-SPLITTING OF ROCK

LINE	Beginning Rock Cut Slope (H:V)	Approx. Station	Ending Rock Cut Slope (H:V)	Approx. Station	Location LT/RT	Pre-splitting of Rock SY
					TOTAL SY:	0

SUMMARY OF SURCHARGES AND SURCHARGE WAITING PERIODS

LINE	Station	Station	Surcharge Height FT	MONTHS

SUMMARY OF SETTLEMENT GAUGES

Gauge No.	LINE and Station	Offset	
		Distance FT	Direction LT/RT
	TOTAL GAUGES (EACH):		

SUMMARY OF EMBANKMENT WAITING PERIODS

LINE	Station	Station	MONTHS

SUMMARY OF BRIDGE WAITING PERIODS

Bridge Description	End Bent/ Bent No.	MONTHS

DocuSign Envelope ID: 067A235F-0381-4EA9-9E6C-859425BCECAB

8/17/99

BRIDGE NO. 640029

PROJECT REFERENCE NO.	SHEET NO.
B-4590	4
R/W SHEET NO.	

ROADWAY DESIGN ENGINEER	HYDRAULICS ENGINEER
NORTH CAROLINA PROFESSIONAL ENGINEER SEAL 046067 CHARLES J. YOUNG ENGINEERING 6/5/2021	NORTH CAROLINA PROFESSIONAL ENGINEER SEAL 18442 RICHARD LEON BOLLINGER, JR. ENGINEERING 6/6/2021

DOCUMENT NOT CONSIDERED FINAL UNLESS ALL SIGNATURES COMPLETED

RS&H

NAD 83/NA 2011

-L- CURVE DATA

PI Sta 21+26.45
△ = 16° 46' 42.0" (RT)
D = 8° 00' 48.2"
L = 209.38'
T = 105.44'
R = 715.00'
SE = 03
R0 = SEE PLANS

BEGIN PROJECT
-L- POT Sta.14+00.00

-L- POT Sta.10+00.00

END GRADE
-Y- Sta.10+90.00

DOUBLE GUARDRAIL POSTS TO SPAN AND AVOID CONFLICT WITH EXISTING AT&T UTILITY VAULT

-Y- POT Sta. 10+00.00 =
-L- POT Sta.15+89.88

BEGIN ROCK PLATING
-L- Sta.16+50.00 +/- LT.

BEGIN CONSTRUCTION
-Y- POT Sta.10+14.05 =
-L- STA.15+81.13

TIE TO EXISTING GUARDRAIL
-Y- STA.10+94.23 (LT)

END CONSTRUCTION
-Y- POT Sta.11+58.98
TIE TO EXISTING SIDEWALK

-Y- POT Sta.13+03.50

END ROCK PLATING
-Y- Sta.11+50.00 +/- LT.

END ROCK PLATING
-L- Sta.16+99.06 +/- LT.& RT.

BEGIN ROCK PLATING
-L- Sta.19+90.00 +/- RT.

END ROCK PLATING
-L- Sta.21+25.00 +/- RT.

BEGIN PROJECT
-L- POT Sta.14+00.00

END PROJECT
-L- POT Sta.22+50.00

-L- PC Sta. 20+21.00

-L- PT Sta. 22+30.38

N 33° 25' 01.3" E

N 47° 59' 39" W 175.38'

N 73° 09' 59" W 153.24'

N 77° 54' 24" W 91.05'

S 78° 57' 36" E 100.49'

S 18° 06' 25.9" E

N 50° 11' 43.3" E

N 53° 47' 06" W 82.07'

N 62° 47' 48" W 86.39'

N 85° 55' 59" W 62.61'

S 70° 43' 57" E 91.39'

1
SMITH CREEK BOATYARD INC
DB 5311PG 2603
DB 5311PG 2618
DB 5354 PG 1312
DB 5570 PG 842
DB 1551PG 778
MB 52 PG 226
MB 53 PG 129

2
NCDOT
DB 3076 PG 420
DB 2838 PG 31
MB 7 PG 79

3
E. W. GODWIN SONS INC.
DB 1939 PG 65
DB 353 PG 979
DB 1865 PG 143
DB 1622 PG 785

4
CORBETT PACKAGE COMPANY
DB 3450 PG 160
DB 3060 PG 854
DB 436 PG 119
CLEAN OUT EXISTING RCP OUTLET AS NECESSARY TO TIE TO PROPOSED DITCH

R A PARSELY HEIRS
DB 2899 PG 1663
DB 68 PG 197 (NOT IN SYSTEM)

ELIZABETH P. ADAMS HEIRS
DB 2899 PG 1663

HILTON STREET (NOT OPEN)

ABANDONED 6" DI ALUM SLUDGE LINE

ABANDONED 6" DI ALUM SLUDGE LINE

SMITH CREEK
EBB
FLOOD

US 117 & NC 133 CORNELIUS HARNETT DRIVE 30' BST

US 117 & NC 133 CASTLE HAYNE ROAD 50' BST

CASTLE HAYNE ROAD US 117 & NC 133

-L- +50.00 60.00' LT ROW POINT NOT SET DUE TO TREE

-L- +50.00 EXIST

-L- +33.71 60.00' LT

-L- +80.00 45.00' LT. 55.00' LT.

-L- +00.00 45.00' LT. 55.00' LT.

+21.00 EXIST 45.00' LT

-L- +18.50 45.00' LT

-L- +30.00 65.00' RT

-L- +65.31 110.00' RT

-L- +88.79 65.00' RT ROW POINT NOT SET DUE TO HIGH WATER

-L- +54.04 48.00' RT

-L- +63.92 65.00' RT.

-L- +20.83 65.00' RT.

-L- +50.00 60.00' RT.

-L- +50.00 50.00' RT.

-L- +15.00 EXIST 50.00' RT.

-L- +85.24 30.01' RT

+10.00

+20.00

+30.00

+40.00

+50.00

+60.00

+70.00

+80.00

+90.00

+00.00

DocuSign Envelope ID: 067A235F-0381-4EA9-9E6C-859425BCECAB

PROJECT REFERENCE NO.	SHEET NO.
B-4590	5

ROADWAY DESIGN ENGINEER — NORTH CAROLINA PROFESSIONAL SEAL 046062 ENGINEER CHARLES J. YOUNG — 6/5/2021

HYDRAULICS ENGINEER — NORTH CAROLINA PROFESSIONAL SEAL 18442 ENGINEER RICHARD LEON BOLLINGER, JR. — 6/6/2021

DOCUMENT NOT CONSIDERED FINAL UNLESS ALL SIGNATURES COMPLETED

RS&H

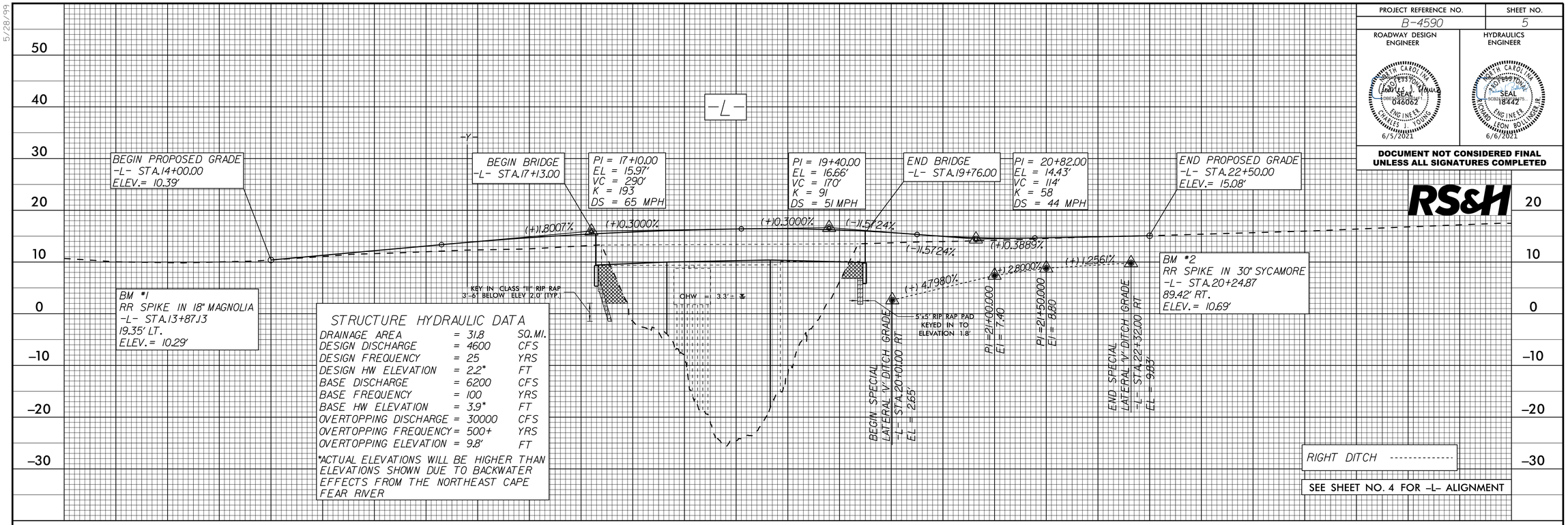

STRUCTURE HYDRAULIC DATA

DRAINAGE AREA	= 31.8	SQ.MI.
DESIGN DISCHARGE	= 4600	CFS
DESIGN FREQUENCY	= 25	YRS
DESIGN HW ELEVATION	= 2.2*	FT
BASE DISCHARGE	= 6200	CFS
BASE FREQUENCY	= 100	YRS
BASE HW ELEVATION	= 3.9*	FT
OVERTOPPING DISCHARGE	= 30000	CFS
OVERTOPPING FREQUENCY	= 500+	YRS
OVERTOPPING ELEVATION	= 9.8'	FT

*ACTUAL ELEVATIONS WILL BE HIGHER THAN ELEVATIONS SHOWN DUE TO BACKWATER EFFECTS FROM THE NORTHEAST CAPE FEAR RIVER

5/28/99

09-JAN-2020 10:16
R:\Roadway\Proj\640029_Rdy_pfl_5.dgn
$$$$USERNAME$$$$

DocuSign Envelope ID: 067A235F-0381-4EA9-9E6C-859425BCECAB

PROJECT REFERENCE NO.	SHEET NO.
B4590	RW03E-1

RIGHT OF WAY CONTROL SHEET

ROW MARKER IRON PIN AND CAP-E

ALIGN	STATION	OFFSET	NORTH	EAST
L	15+65.31	110.00	186612.18322	2320562.25894
L	16+30.00	65.00	186690.96048	2320560.32398
L	16+50.00	-60.00	186776.49527	2320467.00303
L	16+50.00	-50.00	186770.98798	2320475.34987
L	17+33.71	-60.00	186846.36702	2320513.10476
L	17+88.79	65.00	186823.49873	2320647.77339
L	19+18.50	-45.00	186992.34700	2320627.39397
L	19+66.79	70.00	186969.32373	2320749.97976
L	20+20.83	70.00	187014.42428	2320779.73733
L	20+21.00	-45.00	187077.90217	2320683.84371
L	20+21.00	-30.00	187069.64123	2320696.36399
L	21+50.00	50.00	187119.24113	2320837.86594
L	22+15.00	30.00	187176.03217	2320868.47140
L	22+15.00	50.00	187160.94919	2320881.60007

NOTES:

1. IF FURTHER INFORMATION REGARDING PROJECT CONTROL IS NEEDED, PLEASE CONTACT THE LOCATION AND SURVEYS UNIT.

2. PROJECT CONTROL WAS ESTABLISHED USING GNSS, THE GLOBAL NAVIGATION SATELLITE SYSTEM.

6/2/99

REVISIONS

09-JAN-2020 10:38
R:\LocationSurveys\b4590_ls_rw03e-1_181128.dgn
$$$$USERNAME$$$$

DocuSign Envelope ID: 067A235F-0381-4EA9-9E6C-859425BCECAB

PROJECT REFERENCE NO.	SHEET NO.
B4590	RE03E-2

PERMANENT EASEMENT CONTROL SHEET

ROW MARKER PERMANENT EASEMENT-E

ALIGN	STATION	OFFSET	NORTH	EAST
L	19+80.00	-55.00	187049.18741	2320652.91698
L	19+80.00	-45.00	187043.68012	2320661.26382
L	20+00.00	-55.00	187065.88109	2320663.93156
L	20+00.00	-45.00	187060.37381	2320672.27840

NOTES:

1. IF FURTHER INFORMATION REGARDING PROJECT CONTROL IS NEEDED, PLEASE CONTACT THE LOCATION AND SURVEYS UNIT.

2. PROJECT CONTROL WAS ESTABLISHED USING GNSS, THE GLOBAL NAVIGATION SATELLITE SYSTEM.

REVISIONS

6/2/99

09-JAN-2020 10:40
R:\LocationSurveys\b4590_ls_rw03e-2_181128.dgn
$$$$USERNAME$$$$

DocuSign Envelope ID: 067A235F-0381-4EA9-9E6C-859425BCECAB

STATE OF NORTH CAROLINA
DIVISION OF HIGHWAYS

TRANSPORTATION MANAGEMENT PLAN

NEW HANOVER COUNTY

LOCATION: BRIDGE NO. 640029 OVER SMITH CREEK ON SR 2812 (CASTLE HAYNE ROAD)



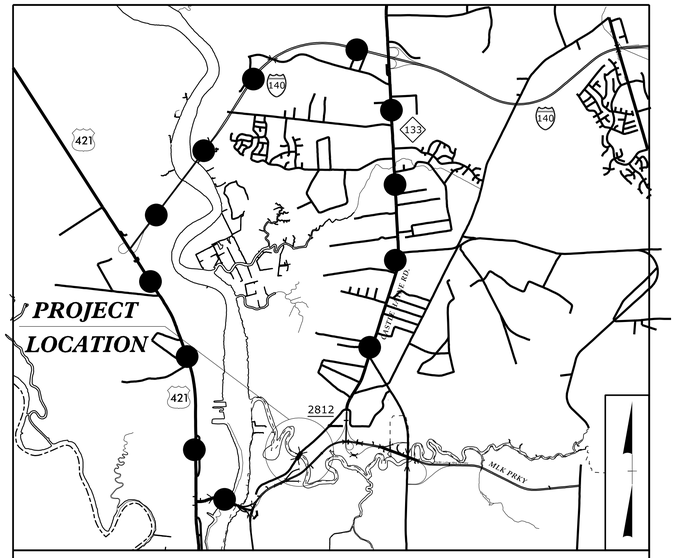

DETOUR

VICINITY MAP N.T.S.

INDEX OF SHEETS

SHEET NO.	TITLE
TMP-1	TITLE SHEET, VICINITY MAP, AND INDEX OF SHEETS
TMP-1A	LIST OF APPLICABLE ROADWAY STANDARD DRAWINGS, AND LEGEND
TMP-1B	TRANSPORTATION OPERATIONS PLAN: (MANAGEMENT STRATEGY AND GENERAL NOTES)
TMP-2	CASTLE HAYNE ROAD DETOUR
TMP-3	TEMPORARY TRAFFIC CONTROL PHASING
TMP-4	TEMPORARY TRAFFIC CONTROL PHASE I DETAIL
TMP-5	TEMPORARY TRAFFIC CONTROL PHASE II DETAIL

SHEET NO.
TMP-1

TIP PROJECT: B-4590



WORK ZONE SAFETY & MOBILITY
"from the MOUNTAINS to the COAST"

PLANS PREPARED BY:

CHARLES J. YOUNG, PE
PROJECT ENGINEER

NIKI E. AVGERINOS, EI
PROJECT DESIGN ENGINEER

NCDOT CONTACTS:

DAVID B. LEONARD, PE
DIVISION PROJECT TEAM LEADER

DIVISION OF HIGHWAYS STATE OF NORTH CAROLINA DEPARTMENT OF TRANSPORTATION WORK ZONE TRAFFIC CONTROL

DOCUMENT NOT CONSIDERED FINAL UNLESS ALL SIGNATURES COMPLETED

RS&H
NC FIRM LICENSE No: F-0493

APPROVED: DocuSigned by: Charles J. Young
DATE: 6/5/2021

NORTH CAROLINA PROFESSIONAL SEAL 046062 ENGINEER CHARLES J. YOUNG

6/4/2021
R:\Traffic\TrafficControlTCP\640029_tmp_tsh.dgn
User:YoungCJ

DocuSign Envelope ID: 067A235F-0381-4EA9-9E6C-859425BCECAB

PROJ. REFERENCE NO.	SHEET NO.
B-4590	TMP-1A

ROADWAY STANDARD DRAWINGS

THE FOLLOWING ROADWAY STANDARDS AS SHOWN IN "ROADWAY STANDARD DRAWINGS" - PROJECT SERVICES UNIT - N.C. DEPARTMENT OF TRANSPORTATION - RALEIGH, N.C., DATED JANUARY 2018 ARE APPLICABLE TO THIS PROJECT AND BY REFERENCE HEREBY ARE CONSIDERED A PART OF THESE PLANS:

STD. NO.	TITLE
1101.01	WORK ZONE ADVANCE WARNING SIGNS
1101.02	TEMPORARY LANE CLOSURES
1101.03	TEMPORARY ROAD CLOSURES
1101.11	TRAFFIC CONTROL DESIGN TABLES
1110.01	STATIONARY WORK ZONE SIGNS
1110.02	PORTABLE WORK ZONE SIGNS
1130.01	DRUM
1145.01	BARRICADES
1150.01	FLAGGING DEVICES
1205.01	PAVEMENT MARKINGS - LINE TYPES AND OFFSETS
1205.02	PAVEMENT MARKINGS - TWO-LANE AND MULTI-LANE ROADWAYS
1205.04	PAVEMENT MARKINGS - INTERSECTIONS
1261.01	GUARDRAIL AND BARRIER DELINEATORS - INSTALLATION SPACING
1261.02	GUARDRAIL AND BARRIER DELINEATORS - TYPES AND MOUNTING
1262.01	GUARDRAIL END DELINEATION

LEGEND

GENERAL

- DIRECTION OF TRAFFIC FLOW
- DIRECTION OF PEDESTRIAN TRAFFIC FLOW
- EXIST. PVMT.
- NORTH ARROW
- PROPOSED PVMT.
- TEMP. SHORING (LOCATION PURPOSES ONLY)
- WORK AREA
- REMOVAL
- ONGOING CONSTRUCTION

SIGNALS

EXISTING PROPOSED TEMPORARY

PAVEMENT MARKINGS

- EXISTING LINES
- TEMPORARY LINES

TRAFFIC CONTROL DEVICES

- BARRICADE (TYPE III)
- CONE
- DRUM SKINNY DRUM TUBULAR MARKER
- TEMPORARY CRASH CUSHION
- FLASHING ARROW BOARD
- FLAGGER
- LAW ENFORCEMENT
- TRUCK MOUNTED ATTENUATOR (TMA)
- CHANGEABLE MESSAGE SIGN

TEMPORARY SIGNING

- PORTABLE SIGN
- STATIONARY SIGN
- STATIONARY OR PORTABLE SIGN

PAVEMENT MARKERS

- CRYSTAL/CRYSTAL
- CRYSTAL/RED
- YELLOW/YELLOW

PAVEMENT MARKING SYMBOLS

PAVEMENT MARKING SYMBOLS

RS&H
NC FIRM LICENSE No: F-0493

APPROVED: Docusigned by: Charles J. Young
DATE: 6/5/2021

NORTH CAROLINA PROFESSIONAL SEAL 046062 ENGINEER CHARLES J. YOUNG

DOCUMENT NOT CONSIDERED FINAL UNLESS ALL SIGNATURES COMPLETED

DIVISION OF HIGHWAYS STATE OF NORTH CAROLINA DEPARTMENT OF TRANSPORTATION WORK ZONE TRAFFIC CONTROL

LIST OF APPLICABLE ROADWAY STANDARD DRAWINGS AND LEGEND

6/4/2021
R:\Traffic\TrafficControl\TCP\640029_tmp_1A.dgn
User:YoungCJ

DocuSign Envelope ID: 067A235F-0381-4EA9-9E6C-859425BCECAB

PROJ. REFERENCE NO.	SHEET NO.
B-4590	TMP-1B

MANAGEMENT STRATEGY

THE PROPOSED ROADWAY AND STRUCTURE ALONG -L- (CASTLE HAYNE RD) WILL BE CONSTRUCTED USING ROAD CLOSURES AND AN OFF-SITE DETOUR ALONG MCRAE ST (-Y-), US 74 (MARTIN LUTHER KING JR PKWY, US 421, I-140, AND NC 133.

THE PROPOSED ROADWAY ALONG -Y- (MCRAE ST) AND PORTION OF ROADWAY ALONG -L- (CASTLE HAYNE RD) WILL BE PHASE CONSTRUCTED USING LANE CLOSURES.

GENERAL NOTES

CHANGES MAY BE REQUIRED WHEN PHYSICAL DIMENSIONS IN THE DETAIL DRAWINGS, STANDARD DETAILS, AND ROADWAY DETAILS ARE NOT ATTAINABLE TO MEET FIELD CONDITIONS OR RESULT IN DUPLICATE OR UNDESIRED OVERLAPPING OF DEVICES. MODIFICATION MAY INCLUDE: MOVING, SUPPLEMENTING, COVERING, OR REMOVAL OF DEVICES AS DIRECTED BY THE ENGINEER.

THE FOLLOWING GENERAL NOTES APPLY AT ALL TIMES FOR THE DURATION OF THE CONSTRUCTION PROJECT EXCEPT WHEN OTHERWISE NOTED IN THE PLAN OR DIRECTED BY THE ENGINEER.

LANE AND SHOULDER CLOSURE REQUIREMENTS

A) REMOVE LANE CLOSURE DEVICES FROM THE LANE WHEN WORK IS NOT BEING PERFORMED BEHIND THE LANE CLOSURE OR WHEN A LANE CLOSURE IS NO LONGER NEEDED OR AS DIRECTED BY THE ENGINEER.

B) WHEN PERSONNEL AND/OR EQUIPMENT ARE WORKING WITHIN 15 FT OF AN OPEN TRAVEL LANE, CLOSE THE NEAREST OPEN SHOULDER USING ROADWAY STANDARD DRAWING NO. 1101.04 UNLESS THE WORK AREA IS PROTECTED BY BARRIER OR GUARDRAIL OR A LANE CLOSURE IS INSTALLED.

C) WHEN PERSONNEL AND/OR EQUIPMENT ARE WORKING ON THE SHOULDER ADJACENT TO AN UNDIVIDED FACILITY AND WITHIN 5 FT OF AN OPEN TRAVEL LANE, CLOSE THE NEAREST OPEN TRAVEL LANE USING ROADWAY STANDARD DRAWING NO. 1101.02 UNLESS THE WORK AREA IS PROTECTED BY BARRIER OR GUARDRAIL.

WHEN PERSONNEL AND/OR EQUIPMENT ARE WORKING ON THE SHOULDER ADJACENT TO A DIVIDED FACILITY AND WITHIN 10 FT OF AN OPEN TRAVEL LANE, CLOSE THE NEAREST OPEN TRAVEL LANE USING ROADWAY STANDARD DRAWING NO. 1101.02 UNLESS THE WORK AREA IS PROTECTED BY BARRIER OR GUARDRAIL.

D) WHEN PERSONNEL AND/OR EQUIPMENT ARE WORKING WITHIN A LANE OF TRAVEL OF AN UNDIVIDED OR DIVIDED FACILITY, CLOSE THE LANE ACCORDING TO THE TRAFFIC CONTROL PLANS, ROADWAY STANDARD DRAWINGS, OR AS DIRECTED BY THE ENGINEER. CONDUCT THE WORK SO THAT ALL PERSONNEL AND/OR EQUIPMENT REMAIN WITHIN THE CLOSED TRAVEL LANE.

E) DO NOT WORK SIMULTANEOUSLY WITHIN 15 FT ON BOTH SIDES OF AN OPEN TRAVELWAY, RAMP, OR LOOP WITHIN THE SAME LOCATION UNLESS PROTECTED WITH GUARDRAIL OR BARRIER.

PAVEMENT EDGE DROP OFF REQUIREMENTS

F) BACKFILL AT A 6:1 SLOPE UP TO THE EDGE AND ELEVATION OF EXISTING PAVEMENT IN AREAS ADJACENT TO AN OPENED TRAVEL LANE THAT HAS AN EDGE OF PAVEMENT DROP-OFF AS FOLLOWS:

BACKFILL DROP-OFFS THAT EXCEED 2 INCHES ON ROADWAYS WITH POSTED SPEED LIMITS OF 45 MPH OR GREATER.

BACKFILL DROP-OFFS THAT EXCEED 3 INCHES ON ROADWAYS WITH POSTED SPEED LIMITS LESS THAN 45 MPH.

BACKFILL WITH SUITABLE COMPACTED MATERIAL, AS APPROVED BY THE ENGINEER, AT NO EXPENSE TO THE DEPARTMENT.

G) DO NOT EXCEED A DIFFERENCE OF 2 INCHES IN ELEVATION BETWEEN OPEN LANES OF TRAFFIC FOR NOMINAL LIFTS OF 1.5 INCHES. INSTALL ADVANCE WARNING "UNEVEN LANES" SIGNS (W8-11) 100 FT IN ADVANCE AND A MINIMUM OF EVERY HALF MILE THROUGHOUT THE UNEVEN AREA.

TRAFFIC PATTERN ALTERATIONS

H) NOTIFY THE ENGINEER THIRTY (30) CALENDAR DAYS PRIOR TO ANY TRAFFIC PATTERN ALTERATION.

SIGNING

I) INSTALL ADVANCE WORK ZONE WARNING SIGNS WHEN WORK IS WITHIN 40 FT FROM THE EDGE OF TRAVEL LANE AND NO MORE THAN THREE (3) DAYS PRIOR TO THE BEGINNING OF CONSTRUCTION.

J) PROVIDE SIGNING AND DEVICES REQUIRED TO CLOSE THE ROAD ACCORDING TO THE ROADWAY STANDARD DRAWINGS AND TRAFFIC CONTROL PLANS.

K) COVER OR REMOVE ALL SIGNS AND DEVICES REQUIRED TO CLOSE THE ROAD WHEN ROAD CLOSURE IS NOT IN OPERATION.

COVER OR REMOVE ALL SIGNS REQUIRED FOR THE OFF-SITE DETOUR WHEN THE DETOUR IS NOT IN OPERATION.

L) ENSURE ALL NECESSARY SIGNING IS IN PLACE PRIOR TO ALTERING ANY TRAFFIC PATTERN.

TRAFFIC CONTROL DEVICES

M) WHEN LANE CLOSURES ARE NOT IN EFFECT SPACE CHANNELIZING DEVICES IN WORK AREAS NO GREATER IN FEET THAN TWICE THE POSTED SPEED LIMIT (MPH) EXCEPT, 10 FT ON-CENTER IN RADII, AND 3 FT OFF THE EDGE OF AN OPEN TRAVELWAY. REFER TO STANDARD SPECIFICATIONS FOR ROADS AND STRUCTURES SECTIONS 1130 (DRUMS), 1135 (CONES) AND 1180 (SKINNY DRUMS) FOR ADDITIONAL REQUIREMENTS.

N) PLACE TYPE III BARRICADES, WITH "ROAD CLOSED" SIGN R11-2 ATTACHED, OF SUFFICIENT LENGTH TO CLOSE ENTIRE ROADWAY.

PAVEMENT MARKINGS AND MARKERS

O) INSTALL TEMPORARY PAVEMENT MARKINGS AND TEMPORARY PAVEMENT MARKERS ON INTERIM LAYERS OF PAVEMENT AS FOLLOWS:

ROAD NAME	MARKING	MARKER
CASTLE HAYNE RD (-L-)	PAINT	N/A
MCRAE ST (-Y-)	PAINT	N/A

P) PLACE ONE APPLICATION OF PAINT FOR TEMPORARY TRAFFIC PATTERNS. PLACE A SECOND APPLICATION OF PAINT SIX (6) MONTHS AFTER THE INITIAL APPLICATION AND EVERY SIX MONTHS AS DIRECTED BY THE ENGINEER.

Q) TIE PROPOSED PAVEMENT MARKING LINES TO EXISTING PAVEMENT MARKING LINES.

R) REMOVE/REPLACE ANY CONFLICTING/DAMAGED PAVEMENT MARKINGS AND MARKERS BY THE END OF EACH DAY'S OPERATION.

MISCELLANEOUS

S) IN THE EVENT A TIE-IN CANNOT BE MADE IN ONE DAY'S TIME, BRING THE TIE-IN AREA TO AN APPROPRIATE ROADWAY ELEVATION AS DETERMINED BY THE ENGINEER. PLACE BLACK ON ORANGE "LOOSE GRAVEL" SIGNS (W8-7) AND BLACK ON ORANGE "PAVEMENT ENDS" SIGNS (W8-3) AND RESPECTIVELY IN ADVANCE OF THE UNEVEN AREAS. USE DRUMS TO DELINEATE THE EDGE OF ROADWAY ALONG UNPAVED AREAS.

RS&H
NC FIRM LICENSE No: F-0493

APPROVED: DocuSigned by: Charles J. Young
DATE: 6/5/2021

NORTH CAROLINA PROFESSIONAL SEAL 046062 ENGINEER CHARLES J. YOUNG

DOCUMENT NOT CONSIDERED FINAL UNLESS ALL SIGNATURES COMPLETED

DIVISION OF HIGHWAYS · STATE OF NORTH CAROLINA · DEPARTMENT OF TRANSPORTATION · WORK ZONE TRAFFIC CONTROL

TRANSPORTATION OPERATIONS PLAN

6/4/2021
R:\Traffic\TrafficControl\TCP\640029_tmp_GN.dgn
User:YoungCJ

DocuSign Envelope ID: 067A235F-0381-4EA9-9E6C-859425BCECAB

PROJ. REFERENCE NO.	SHEET NO.
B-4590	TMP-2

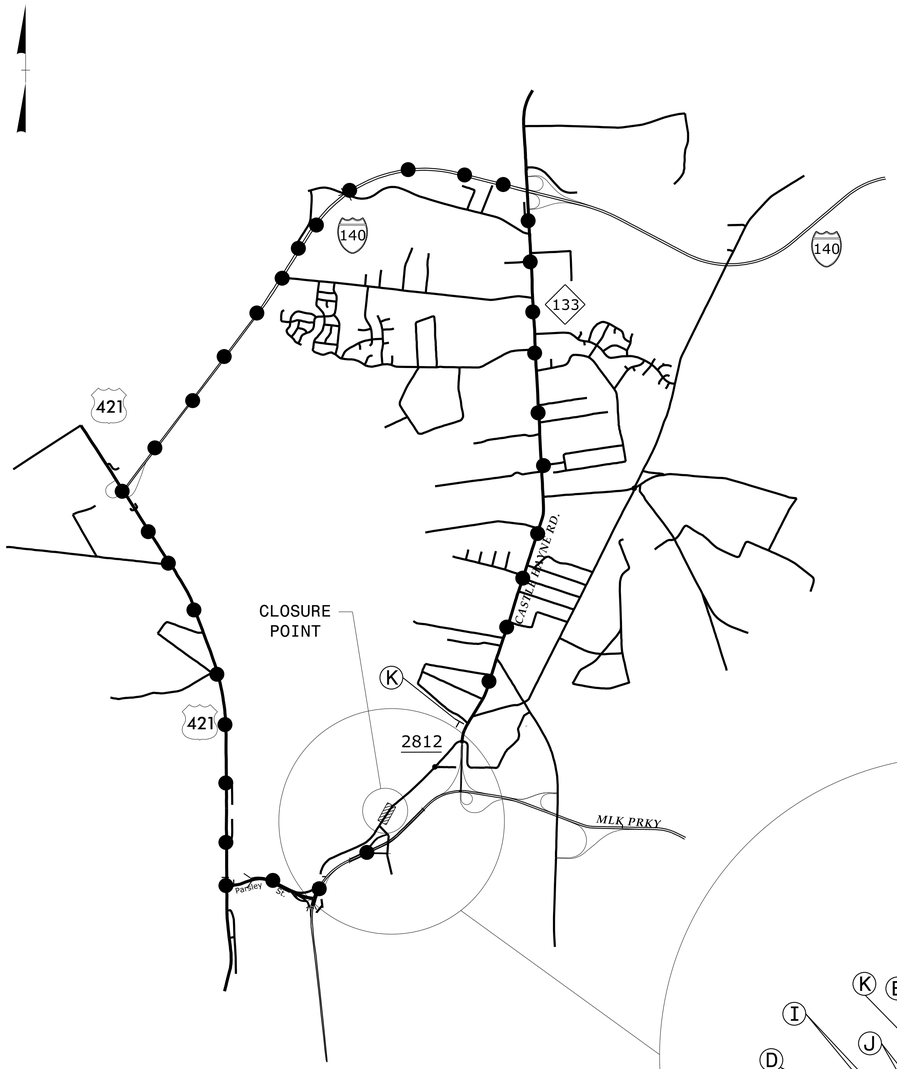

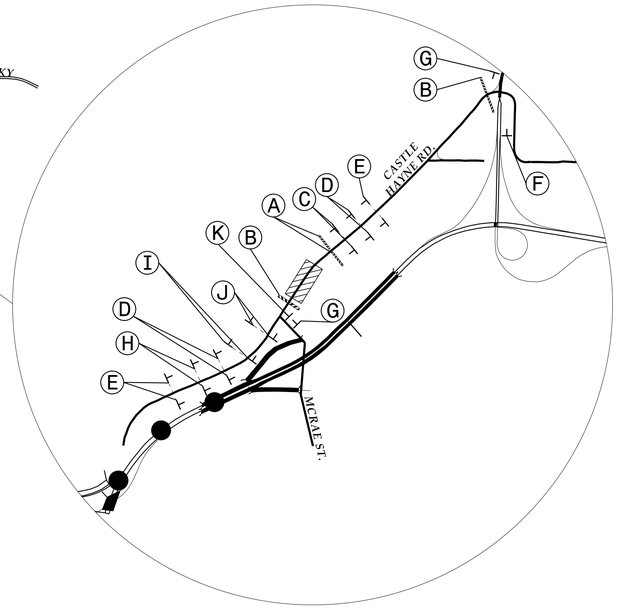

LEGEND

DETOUR ROUTE

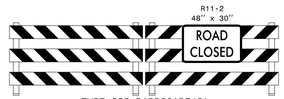

TYPE III BARRICADE(S)

Ⓐ



TYPE III BARRICADE

Ⓑ



Ⓒ



Ⓓ



Ⓔ

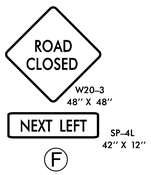

Ⓕ



Ⓖ



Ⓗ



Ⓘ



Ⓙ



Ⓚ

NOTE: DUE TO THE BRIDGE BEING CLOSED FOR SEVERAL WEEKS PRIOR TO THE LET OF THIS PROJECT A SIGNED DETOUR IS NO LONGER REQUIRED

RS&H
NC FIRM LICENSE No: F-0493

APPROVED: Docusigned by: Charles J. Young
DATE: 6/5/2021

NORTH CAROLINA PROFESSIONAL SEAL 046062 ENGINEER CHARLES J. YOUNG

DOCUMENT NOT CONSIDERED FINAL UNLESS ALL SIGNATURES COMPLETED

DIVISION OF HIGHWAYS · STATE OF NORTH CAROLINA · DEPARTMENT OF TRANSPORTATION · WORK ZONE TRAFFIC CONTROL

CASTLE HAYNE ROAD DETOUR

6/4/2021
X:\P\03003606 Div 3 B-4590\Design\Traffic\TrafficControl\TCP\640029_tmp_detour.dgn
User:YoungCJ

DocuSign Envelope ID: 067A235F-0381-4EA9-9E6C-859425BCECAB

PROJ. REFERENCE NO.	SHEET NO.
B-4590	TMP-3

PHASING NOTES

NOTES:

-RSD REFERS TO ROADWAY STANDARD DRAWING

-ASPHALT CONSTRUCTION IS UP, BUT NOT INCLUDING, THE FINAL LAYER OF SURFACE UNLESS OTHERWISE NOTED.

PHASE I

STEP 1 - USING RSD 1101.01 (SHEET 3 OF 3), INSTALL ALL WORK ZONE ADVANCE WARNING SIGNS ON -L- (SR 2812 CASTLE HAYN RD.) AND -Y- (MCRAE ST.)

STEP 2 - USING RSD 1101.02 (SHEET 1 OF 14) AND WITH TRAFFIC IN EXISTING PATTERN, CONSTRUCT THE FOLLOWING (SEE SHEET TMP-4):

-L- STA. 14+00± TO -L- STA. 15+00± (LT)
-L- STA. 15+00± TO -L- STA. 16+00±
-Y- STA. 10+00± TO -L- STA. 11+00±
-Y- STA. 11+00± TO -L- STA. 11+59± (LT)

USING RSD 1101.03 (SHEET 1 OF 9) AND AN OFFSITE DETOUR, BEGIN CONSTRUCTION OF -L- STA. 14+00± TO -L- STA. 22+50± (SEE SHEET TMP-2)

PHASE II

STEP 1 - USING RSD 1101.02 (SHEET 1 OF 14), SHIFT TRAFFIC ONTO PROPOSED ROADWAY AND CONSTRUCT THE FOLLOWING (SEE SHEET TMP-5):

-L- STA. 14+00± (RT) TO -Y- STA. 11+00± (RT)

USING RSD 1101.03 (SHEET 1 OF 9) AND AN OFFSITE DETOUR, COMPLETE CONSTRUCTION OF -L- STA. 14+00± TO -L- STA. 22+50± INCLUDING STRUCTURE (SEE SHEET TMP-2).

STEP 2 - USING RSD 1101.02 (SHEET 1 OF 14), PLACE FINAL PAVEMENT LAYER, PAVEMENT MARKINGS AND MARKERS. SHIFT TRAFFIC INTO FINAL PATTERN AND REMOVE ALL TRAFFIC CONTROL DEVICES.

RS&H
NC FIRM LICENSE No: F-0493

APPROVED: DocuSigned by: Charles J. Young
DBE5A0DECB824F1...
DATE: 6/5/2021

NORTH CAROLINA PROFESSIONAL SEAL 046062 ENGINEER CHARLES J. YOUNG

DOCUMENT NOT CONSIDERED FINAL UNLESS ALL SIGNATURES COMPLETED

DIVISION OF HIGHWAYS · STATE OF NORTH CAROLINA · DEPARTMENT OF TRANSPORTATION · WORK ZONE TRAFFIC CONTROL

PHASING NOTES

6/4/2021
R:\Traffic\TrafficControl\TCP\640029_tmp_phasing.dgn
User:YoungCJ

DocuSign Envelope ID: 067A235F-0381-4EA9-9E6C-859425BCECAB

PROJ. REFERENCE NO.	SHEET NO.
B-4590	TMP-4

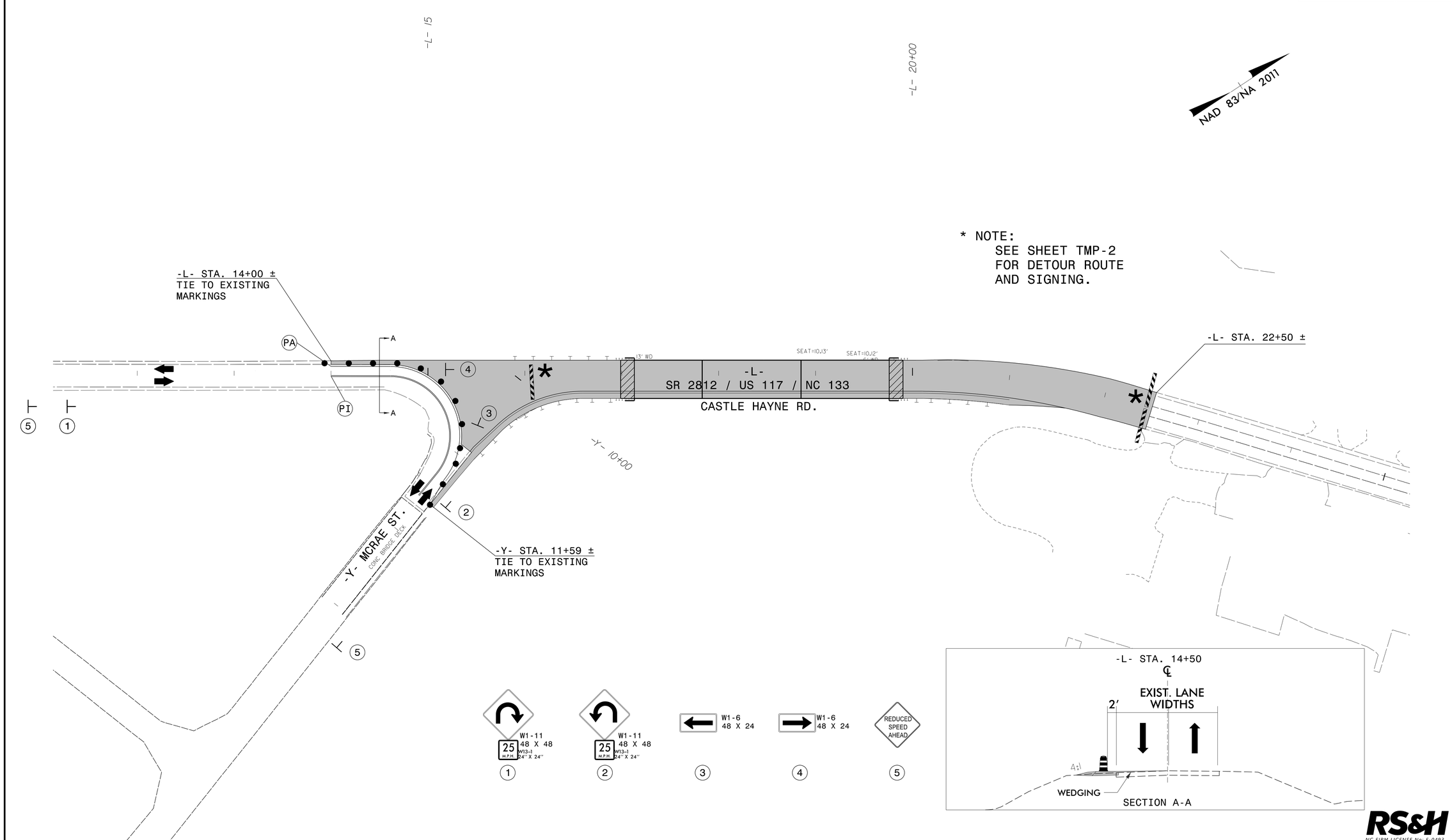

RS&H
NC FIRM LICENSE No: F-0493

APPROVED: DocuSigned by: Charles J. Young
DATE: 6/5/2021

NORTH CAROLINA PROFESSIONAL SEAL 046062 ENGINEER CHARLES J. YOUNG

DIVISION OF HIGHWAYS
STATE OF NORTH CAROLINA
DEPARTMENT OF TRANSPORTATION
WORK ZONE TRAFFIC CONTROL

PHASE I DETAIL

DOCUMENT NOT CONSIDERED FINAL
UNLESS ALL SIGNATURES COMPLETED

6/4/2021
R:\Traffic\TrafficControl\TCP\640029_tmp_pi_dtl_01.dgn
User:YoungCJ

DocuSign Envelope ID: 067A235F-0381-4EA9-9E6C-859425BCECAB

PROJ. REFERENCE NO.	SHEET NO.
B-4590	TMP-5

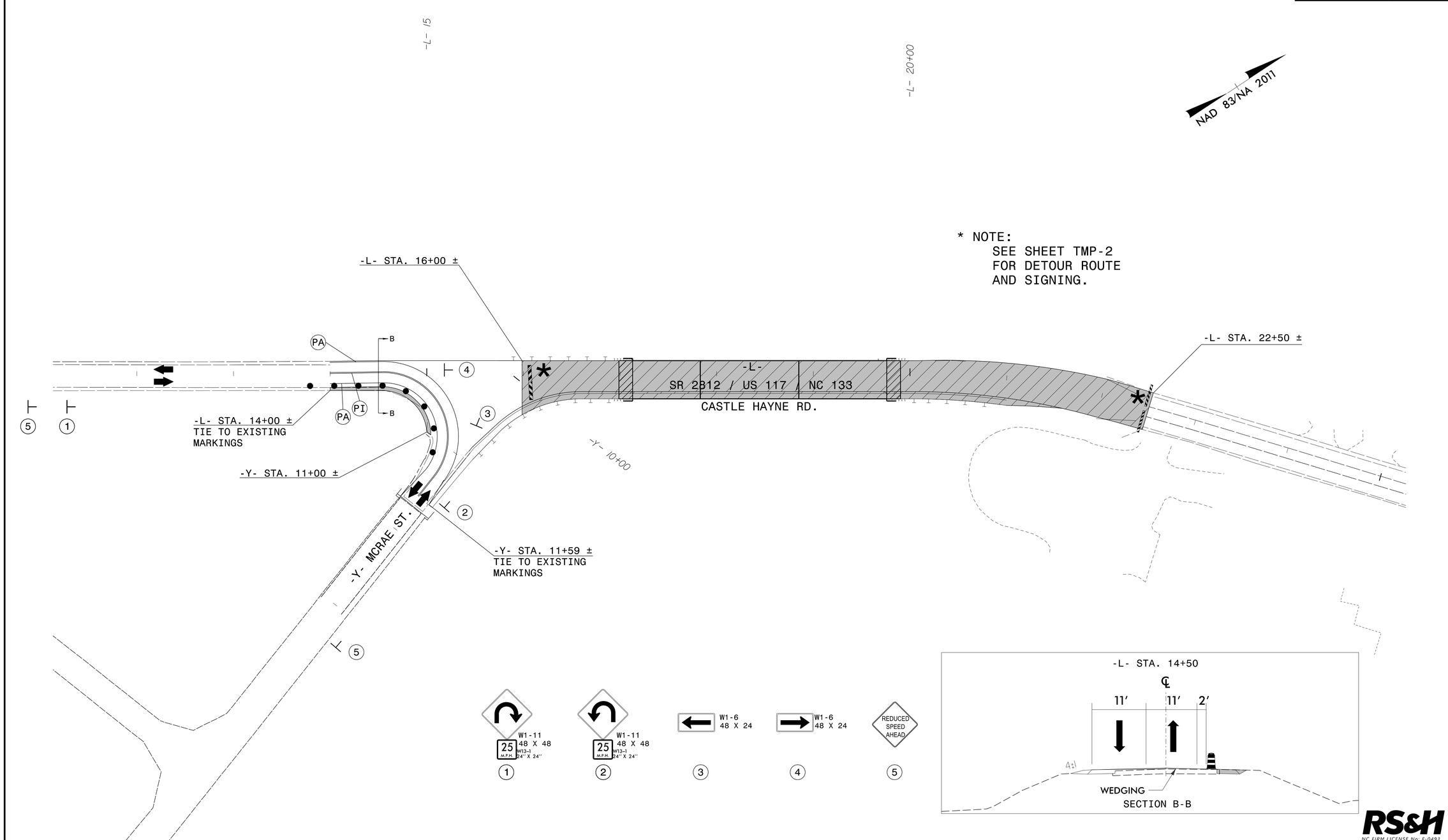

RS&H
NC FIRM LICENSE No: F-0493

APPROVED: Charles J. Young
DATE: 6/5/2021

NORTH CAROLINA PROFESSIONAL SEAL 046062 ENGINEER CHARLES J. YOUNG

DIVISION OF HIGHWAYS
STATE OF NORTH CAROLINA
DEPARTMENT OF TRANSPORTATION
WORK ZONE TRAFFIC CONTROL

DOCUMENT NOT CONSIDERED FINAL
UNLESS ALL SIGNATURES COMPLETED

PHASE II DETAIL

6/4/2021
R:\Traffic\TrafficControl\TCP\640029_tmp_pii_dtl_01.dgn
User:YoungCJ

DocuSign Envelope ID: 067A235F-0381-4EA9-9E6C-859425BCECAB

T.I.P.: B-4590

CONTRACT: DC00249

STATE OF NORTH CAROLINA
DEPARTMENT OF TRANSPORTATION

PAVEMENT MARKING PLAN
NEW HANOVER COUNTY

LOCATION: BRIDGE NO. 640029 OVER SMITH CREEK
ON SR 2812 (CASTLE HAYNE ROAD)

TIP NO.	SHEET NO.
B-4590	PMP-1

APPROVED: DocuSigned by: Charles J. Young 0BE5A9DEC8924F1...

DATE: 6/5/2021

SEAL

NORTH CAROLINA PROFESSIONAL SEAL 046062 ENGINEER CHARLES J. YOUNG

DOCUMENT NOT CONSIDERED FINAL UNLESS ALL SIGNATURES COMPLETED

INDEX

SHEET NO.	DESCRIPTION
PMP-1	PAVEMENT MARKING PLAN TITLE AND SCHEDULE SHEET
PMP-2	PAVEMENT MARKING DETAIL

GENERAL NOTES

THE FOLLOWING GENERAL NOTES APPLY AT ALL TIMES FOR THE DURATION OF THE CONSTRUCTION PROJECT, EXCEPT WHEN OTHERWISE NOTED IN THE PLAN, OR DIRECTED BY THE ENGINEER.

A) INSTALL PAVEMENT MARKINGS AND PAVEMENT MARKERS ON THE FINAL SURFACE AS FOLLOWS:

ROAD NAME	MARKING	MARKER
US 117 / NC 133	THERMOPLASTIC	PERMANENT RAISED

B) TIE PROPOSED PAVEMENT MARKING LINES TO EXISTING PAVEMENT MARKING LINES.

C) REMOVE/REPLACE ANY CONFLICTING/DAMAGED PAVEMENT MARKINGS AND MARKERS.

D) REMOVE ALL RESIDUE AND SURFACE LAITANCE BY ACCEPTABLE METHODS ON CONCRETE BRIDGE DECKS PRIOR TO PLACING PAINT PAVEMENT MARKING MATERIAL.

E) UNLESS OTHERWISE SPECIFIED, HEATED-IN-PLACE THERMOPLASTIC MAY BE USED IN LIEU OF EXTRUDED THERMOPLASTIC FOR STOP BARS, SYMBOLS, CHARACTERS AND DIAGONALS. IF HEATED-IN-PLACE IS USED, IT SHALL BE PAID FOR USING THE EXTRUDED THERMOPLASTIC PAY ITEM.

F) UNLESS OTHERWISE SPECIFIED, HEATED-IN-PLACE THERMOPLASTIC MAY BE USED IN LIEU OF COLD APPLIED PLASTIC FOR STOP BARS, SYMBOLS, CHARACTERS AND DIAGONALS ON ASPHALT OR CONCRETE ROADWAYS. IF HEATED-IN-PLACE IS USED, IT SHALL BE PAID FOR USING THE COLD APPLIED PAY ITEM.

ROADWAY STANDARD DRAWING

THE FOLLOWING ROADWAY STANDARDS AS APPEAR IN "ROADWAY STANDARD DRAWINGS" - PROJECT SERVICES UNIT - N.C. DEPARTMENT OF TRANSPORTATION - RALEIGH, N.C., DATED JANUARY 2018 ARE APPLICABLE TO THIS PROJECT AND BY REFERENCE HEREBY ARE CONSIDERED A PART OF THESE PLANS:

STD. NO.	TITLE
1205.01	PAVEMENT MARKINGS - LINE TYPES AND OFFSETS
1205.02	PAVEMENT MARKINGS - TWO-LANE AND MULTILANE ROADWAYS
1205.04	PAVEMENT MARKINGS - INTERSECTIONS
1205.08	PAVEMENT MARKINGS - SYMBOLS AND WORD MESSAGES
1205.09	PAVEMENT MARKINGS - PAINTED ISLANDS
1205.12	PAVEMENT MARKINGS - BRIDGES
1250.01	RAISED PAVEMENT MARKERS - INSTALLATION SPACING
1251.01	RAISED PAVEMENT MARKERS - PERMANENT AND TEMPORARY
1261.01	GUARDRAIL AND BARRIER DELINEATORS - INSTALLATION SPACING
1261.02	GUARDRAIL AND BARRIER DELINEATORS - TYPES AND MOUNTING
1262.01	GUARDRAIL END DELINEATION

PAVEMENT MARKING SCHEDULE

T1	WHITE EDGELINE	THERMO (4", 90 MIL)
T2	WHITE SOLID LANE LINE	THERMO (4", 90 MIL)
T5	2 FT. - 6 FT. WHITE MINISKIP	THERMO (4", 90 MIL)
T13	YELLOW DOUBLE CENTER	THERMO (4", 90 MIL)
T42	YELLOW DIAGONAL	THERMO (8", 90 MIL)
T61	WHITE STOP BAR	THERMO (24", 90 MIL)
T90	BICYCLE SYMBOL, HEATED-IN-PLACE	THERMO (90 MIL)
T93	BICYCLE CHARACTER, HEATED-IN-PLACE	THERMO (120 MIL)
W2	WHITE SOLID LANE LINE	POLYUREA (4", 30 MIL)
W13	YELLOW DOUBLE CENTER	POLYUREA (4", 30 MIL)

PLAN SUBMITTED TO: NCDOT DIVISION 3

DEREK R. PIELECH, PE DIVISION 3 BRIDGE PROGRAM MANAGER

STATE OF NORTH CAROLINA · DEPARTMENT OF TRANSPORTATION

Prepared in the Office of:
RS&H
ARCHITECTS-ENGINEERS-PLANNERS, INC.

CHARLES J. YOUNG, PE PROJECT ENGINEER

NIKI E. AVGERINOS, EI DESIGN ENGINEER

RS&H
NC FIRM LICENSE No: F-0493

6/4/2021
R:\Traffic\Delineation\640029_pmp_tsh.dgn
User:tsharp3

DocuSign Envelope ID: 067A235F-0381-4EA9-9E6C-859425BCECAB

TIP NO.	SHEET NO.
B-4590	PMP-2

APPROVED: Charles J. Young
DATE: 6/5/2021

SEAL
NORTH CAROLINA PROFESSIONAL SEAL 046062 ENGINEER CHARLES J. YOUNG

DOCUMENT NOT CONSIDERED FINAL UNLESS ALL SIGNATURES COMPLETED

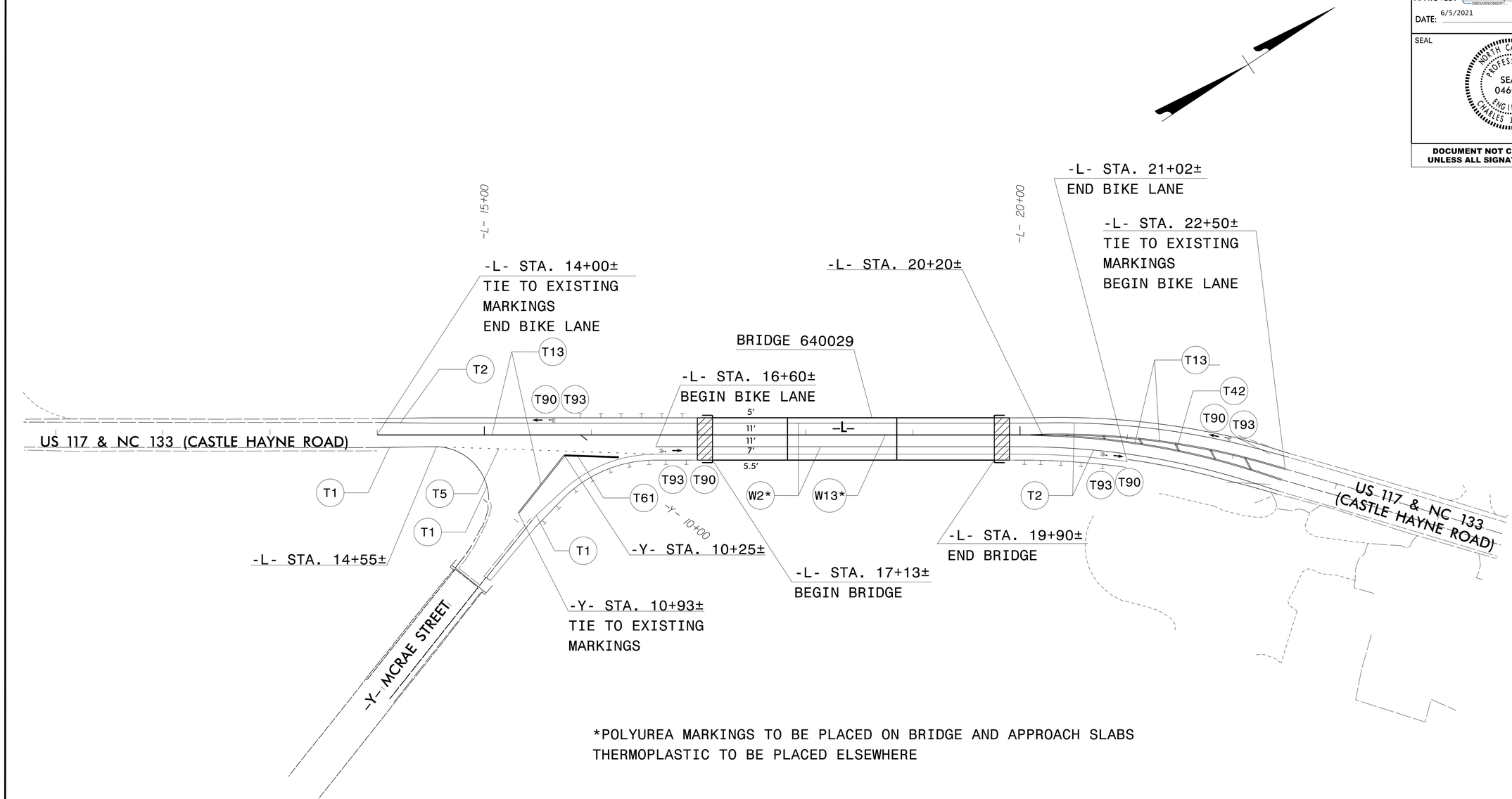

*POLYUREA MARKINGS TO BE PLACED ON BRIDGE AND APPROACH SLABS
THERMOPLASTIC TO BE PLACED ELSEWHERE

RS&H
NC FIRM LICENSE No: F-0493

PAVEMENT MARKING DETAIL

6/4/2021
R:\Traffic\Delineation\640029_pmp_psh.dgn
User:YoungCJ

DocuSign Envelope ID: 067A235F-0381-4EA9-9E6C-859425BCECAB

TIP PROJECT: B-4590

STATE OF NORTH CAROLINA
DIVISION OF HIGHWAYS

PLAN FOR PROPOSED
HIGHWAY EROSION CONTROL

NEW HANOVER COUNTY

LOCATION: BRIDGE NO. 640029 OVER SMITH CREEK
ON SR 2812/US 117/NC 133 (CASTLE HAYNE ROAD)

TYPE OF WORK: GRADING, DRAINAGE, PAVING AND STRUCTURE (BRIDGE)

STATE	STATE PROJECT REFERENCE NO.	SHEET NO.	TOTAL SHEETS
N.C.	B-4590	EC-1	7

STATE PROJ. NO.	F. A. PROJ. NO.	DESCRIPTION

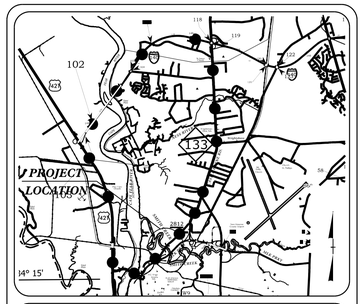

DETOUR

VICINITY MAP
NOT TO SCALE

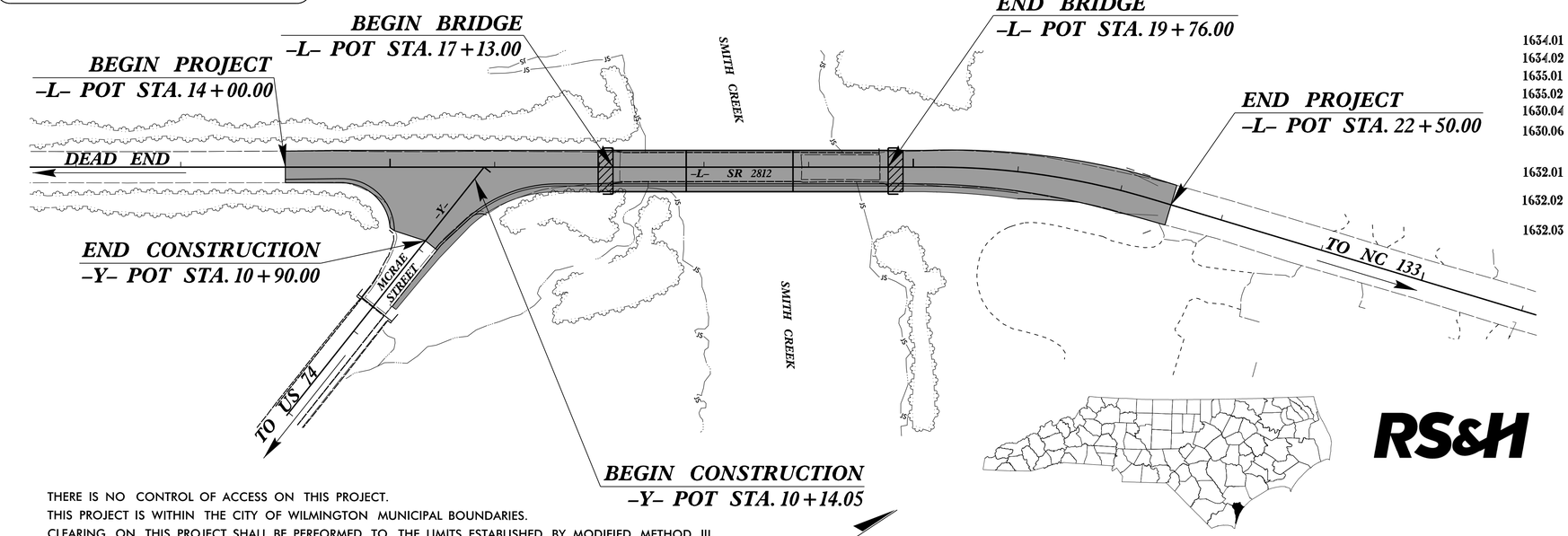

THERE IS NO CONTROL OF ACCESS ON THIS PROJECT.
THIS PROJECT IS WITHIN THE CITY OF WILMINGTON MUNICIPAL BOUNDARIES.
CLEARING ON THIS PROJECT SHALL BE PERFORMED TO THE LIMITS ESTABLISHED BY MODIFIED METHOD III.

EROSION AND SEDIMENT CONTROL MEASURES

Std. #	Description	Symbol
1630.03	Temporary Silt Ditch	TSD
1630.05	Temporary Diversion	TD
1605.01	Temporary Silt Fence	
1606.01	Special Sediment Control Fence	
1622.01	Temporary Berms and Slope Drains	
1630.02	Silt Basin Type B	
1633.01	Temporary Rock Silt Check Type-A	
	Temporary Rock Silt Check Type-A with Matting and Polyacrylamide (PAM)	
1633.02	Temporary Rock Silt Check Type-B	
	Wattle / Coir Fiber Wattle	EW CW
	Wattle / Coir Fiber Wattle with Polyacrylamide (PAM)	
1634.01	Temporary Rock Sediment Dam Type-A	
1634.02	Temporary Rock Sediment Dam Type-B	
1635.01	Rock Pipe Inlet Sediment Trap Type-A	
1635.02	Rock Pipe Inlet Sediment Trap Type-B	
1630.04	Stilling Basin	
1630.06	Special Stilling Basin	
	Rock Inlet Sediment Trap:	
1632.01	Type A	A
1632.02	Type B	B
1632.03	Type C	C
	Skimmer Basin	SK
	Tiered Skimmer Basin	SK
	Infiltration Basin	SK

THIS PROJECT CONTAINS EROSION CONTROL PLANS FOR CLEARING AND GRUBBING PHASE OF CONSTRUCTION.

GRAPHIC SCALE

50 25 0 50 100
PLANS

THESE EROSION AND SEDIMENT CONTROL PLANS COMPLY WITH THE APPLICABLE REGULATIONS SET FORTH BY THE NCG-010000 GENERAL CONSTRUCTION PERMIT EFFECTIVE APRIL 1, 2019 AND ISSUED BY THE NORTH CAROLINA DEPARTMENT OF ENVIRONMENTAL QUALITY DIVISION OF WATER RESOURCES.

RS&H

Prepared in the Office of:

RS&H
8521 SIX FORKS ROAD, SUITE 400
RALEIGH, NC 27615
NC FIRM LICENSE No: F-0493

Designed by:

COLE BENJAMIN, P.E. ***3977***
NAME *LEVEL III CERTIFICATION NO.*

Roadway Standard Drawings

The following roadway english standards as appear in "Roadway Standard Drawings"– Roadway Design Unit – N. C. Department of Transportation – Raleigh, N. C., dated January 2018 and the latest revison thereto are applicable to this project and by reference hereby are considered a part of these plans.

1604.01	Railroad Erosion Control Detail	1632.01	Rock Inlet Sediment Trap Type A
1605.01	Temporary Silt Fence	1632.02	Rock Inlet Sediment Trap Type B
1606.01	Special Sediment Control Fence	1632.03	Rock Inlet Sediment Trap Type C
1607.01	Gravel Construction Entrance	1633.01	Temporary Rock Silt Check Type A
1622.01	Temporary Berms and Slope Drains	1633.02	Temporary Rock Silt Check Type B
1630.01	Riser Basin	1634.01	Temporary Rock Sediment Dam Type A
1630.02	Silt Basin Type B	1634.02	Temporary Rock Sediment Dam Type B
1630.03	Temporary Silt Ditch	1635.01	Rock Pipe Inlet Sediment Trap Type A
1630.04	Stilling Basin	1635.02	Rock Pipe Inlet Sediment Trap Type B
1630.05	Temporary Diversion	1640.01	Coir Fiber Baffle
1630.06	Special Stilling Basin	1645.01	Temporary Stream Crossing
1631.01	Matting Installation		

02-JUN-2021 14:08
C:\Environments\Projects\Roadway\Plan Sheets\B-4590_EC_tsh.dgn
$$USER$$

DocuSign Envelope ID: 067A235F-0381-4EA9-9E6C-859425BCECAB

PROJECT REFERENCE NO.	SHEET NO.
B-4590	EC-2

COIR FIBER WATTLE BARRIER DETAIL

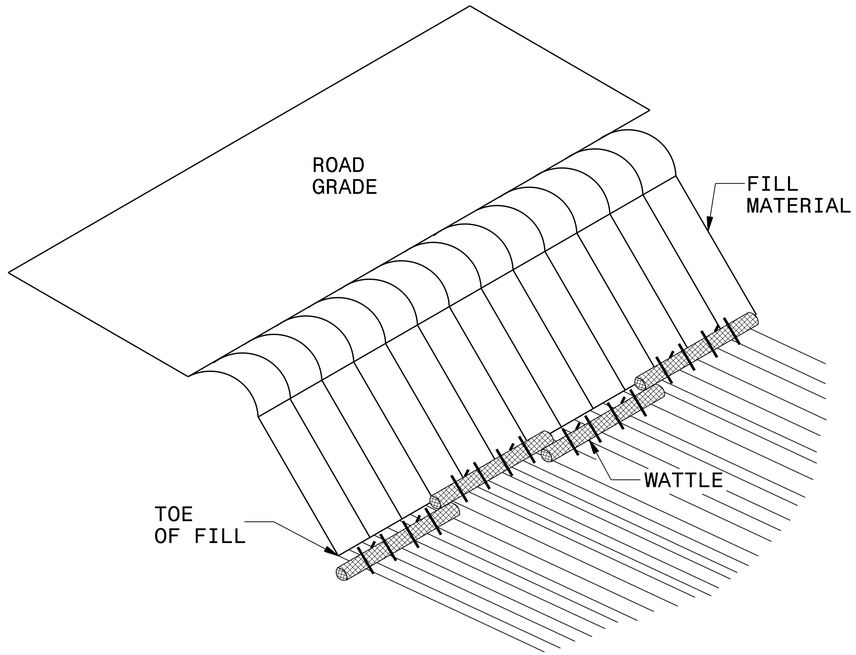

ISOMETRIC VIEW

NOTES:

USE MINIMUM 18 IN. NOMINAL DIAMETER COIR FIBER (COCONUT) WATTLE AND LENGTH OF 10 FT.

EXCAVATE A 2 TO 3 INCH TRENCH FOR WATTLE TO BE PLACED.

DO NOT PLACE WATTLES ON TOE OF SLOPE.

USE 2 FT. WOODEN STAKES WITH A 2 IN. BY 2 IN. NOMINAL CROSS SECTION.

INSTALL A MINIMUM OF 2 UPSLOPE STAKES AND 4 DOWNSLOPE STAKES AT AN ANGLE TO WEDGE WATTLE TO GROUND.

PROVIDE STAPLES MADE OF 0.125 IN. DIAMETER STEEL WIRE FORMED INTO A U SHAPE NOT LESS THAN 12″ IN LENGTH.

INSTALL STAPLES APPROXIMATELY EVERY 1 LINEAR FOOT ON BOTH SIDES OF WATTLE AND AT EACH END TO SECURE IT TO THE SOIL.

FOR BREAKS ALONG LARGE SLOPES, USE MAXIMUM SPACING OF 25 FT.

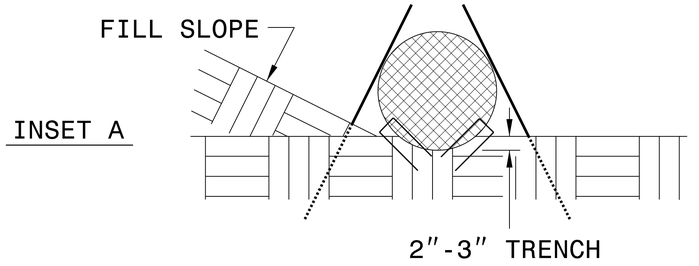

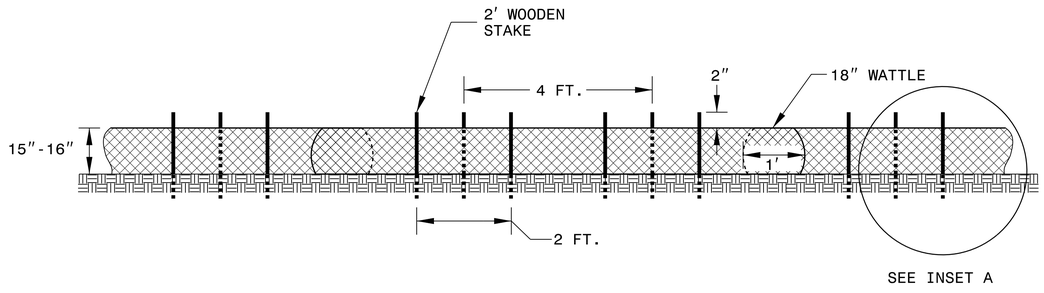

FRONT VIEW

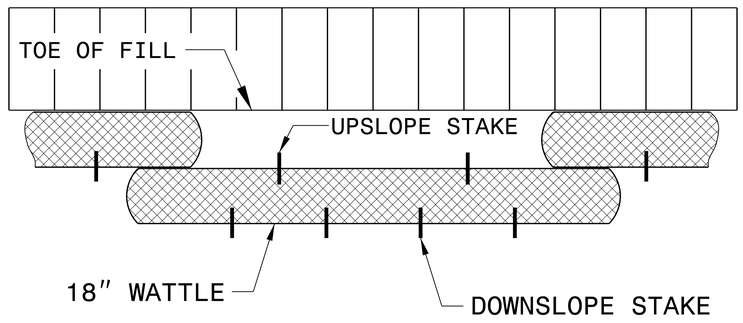

TOP VIEW

DocuSign Envelope ID: 067A235F-0381-4EA9-9E6C-859425BCECAB

PROJECT REFERENCE NO.	SHEET NO.
B-4590	EC-2A

TEMPORARY ROCK SILT CHECK TYPE 'A' WITH EXCELSIOR MATTING AND POLYACRYLAMIDE (PAM)

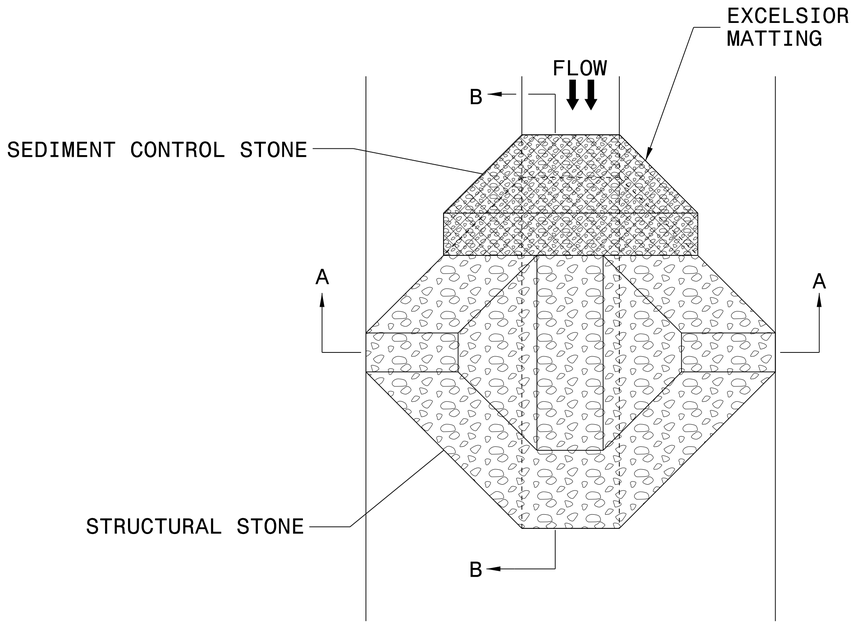

PLAN

NOTES:

INSTALL TEMPORARY ROCK SILT CHECK TYPE A IN ACCORDANCE WITH ROADWAY STANDARD DRAWING NO. 1633.01.

USE EXCELSIOR FOR MATTING MATERIAL AND ANCHOR MATTING SECTION AT TOP AND BOTTOM WITH CLASS B STONE.

PRIOR TO POLYACRYLAMIDE (PAM) APPLICATION, OBTAIN A SOIL SAMPLE FROM PROJECT LOCATION, AND FROM OFFSITE MATERIAL, AND ANALYZE FOR APPROPRIATE PAM FLOCCULANT TO BE APPLIED TO EACH ROCK SILT CHECK.

INITIALLY APPLY 4 OUNCES OF POLYACRYLAMIDE (PAM) TO TOP OF MATTING SECTION AND AFTER EVERY RAINFALL EVENT THAT EQUALS OR EXCEEDS 0.50 INCHES.

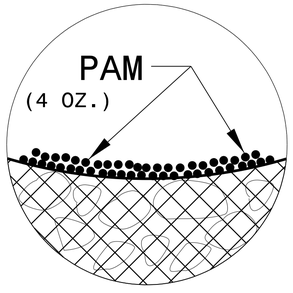

INSET A

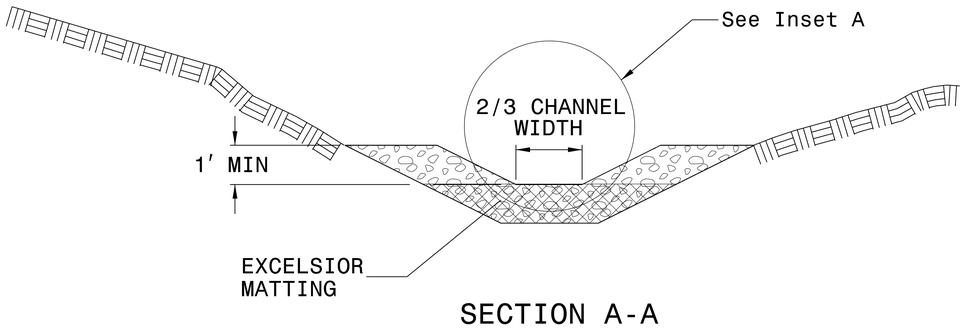

SECTION A-A

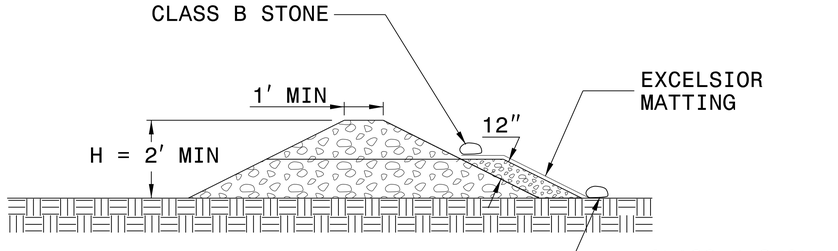

SECTION B-B

NOT TO SCALE

DocuSign Envelope ID: 067A235F-0381-4EA9-9E6C-859425BCECAB

PROJECT REFERENCE NO.	SHEET NO.
B-4590	EC-2B

SILT FENCE COIR FIBER WATTLE BREAK DETAIL

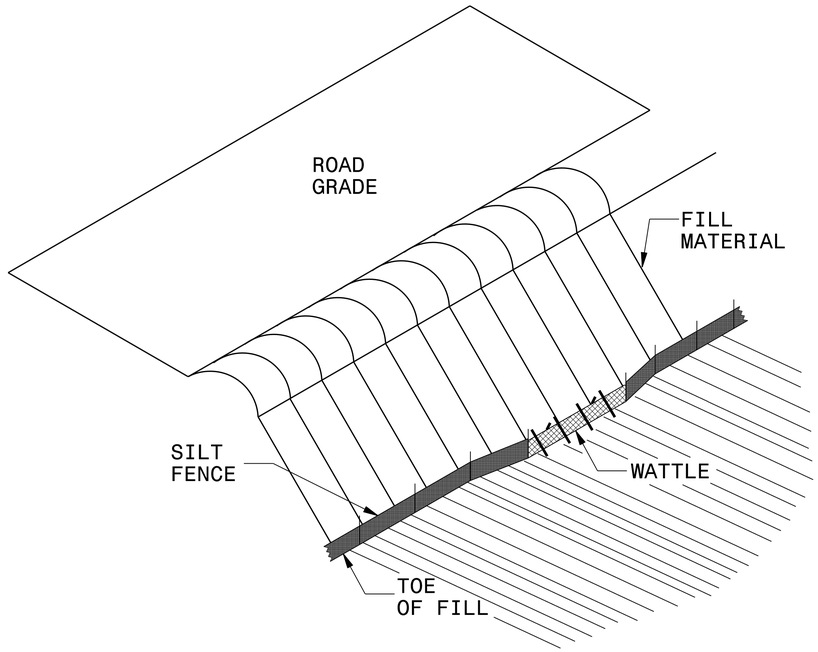

ISOMETRIC VIEW

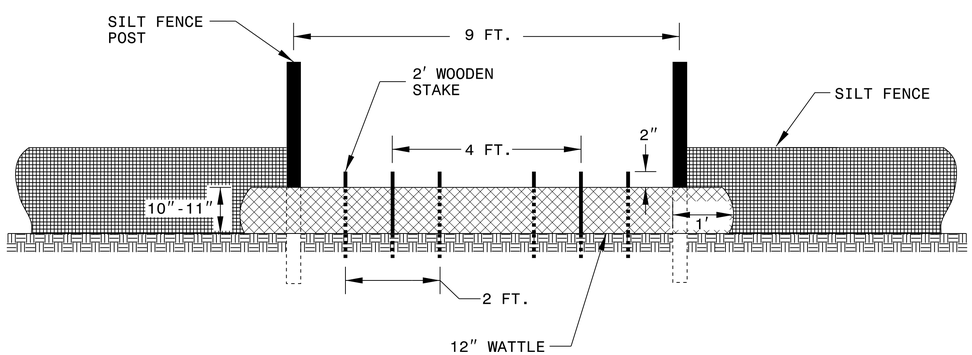

VIEW FROM SLOPE

NOTES:

USE MINIMUM 12 IN. DIAMETER COIR FIBER (COCONUT FIBER) WATTLE AND LENGTH OF 10 FT.

EXCAVATE A 1 TO 2 INCH TRENCH FOR WATTLE TO BE PLACED.

DO NOT PLACE WATTLE ON TOE OF SLOPE.

USE 2 FT. WOODEN STAKES WITH A 2 IN. BY 2 IN. NOMINAL CROSS SECTION.

INSTALL A MINIMUM OF 2 UPSLOPE STAKES AND 4 DOWNSLOPE STAKES AT AN ANGLE TO WEDGE WATTLE TO GROUND.

PROVIDE STAPLES MADE OF 0.125 IN. DIAMETER STEEL WIRE FORMED INTO A U SHAPE NOT LESS THAN 12″ IN LENGTH.

INSTALL STAPLES APPROXIMATELY EVERY 1 LINEAR FOOT ON BOTH SIDES OF WATTLE AND AT EACH END TO SECURE IT TO THE SOIL.

WATTLE INSTALLATION CAN BE ON OUTSIDE OF THE SILT FENCE AS DIRECTED.

INSTALL TEMPORARY SILT FENCE IN ACCORDANCE WITH SECTION 1605 OF THE STANDARD SPECIFICATIONS.

INSET A

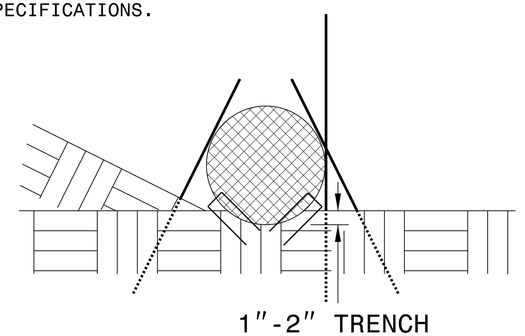

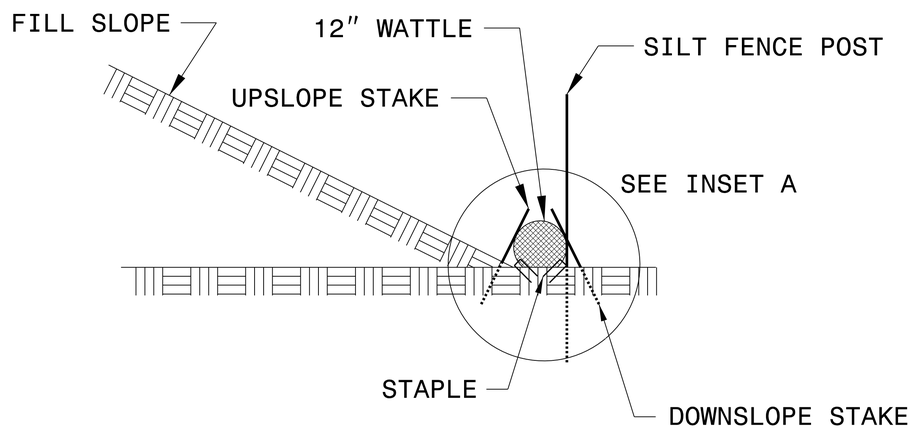

SIDE VIEW

DocuSign Envelope ID: 067A235F-0381-4EA9-9E6C-859425BCECAB

PROJECT REFERENCE NO.	SHEET NO.
B-4590	EC-3

DIVISION OF HIGHWAYS
STATE OF NORTH CAROLINA

SOIL STABILIZATION TIMEFRAMES

SITE DESCRIPTION	STABILIZATION TIME	TIMEFRAME EXCEPTIONS
PERIMETER DIKES, SWALES, DITCHES AND SLOPES	7 DAYS	NONE
HIGH QUALITY WATER (HQW) ZONES	7 DAYS	NONE
SLOPES STEEPER THAN 3:1	7 DAYS	IF SLOPES ARE 10' OR LESS IN LENGTH AND ARE NOT STEEPER THAN 2:1, 14 DAYS ARE ALLOWED.
SLOPES 3:1 OR FLATTER	14 DAYS	7 DAYS FOR SLOPES GREATER THAN 50' IN LENGTH.
ALL OTHER AREAS WITH SLOPES FLATTER THAN 4:1	14 DAYS	NONE, EXCEPT FOR PERIMETERS AND HQW ZONES.

DocuSign Envelope ID: 067A235F-0381-4EA9-9E6C-859425BCECAB

BRIDGE NO. 640029

PROJECT REFERENCE NO.	SHEET NO.
B-4590	EC-4/CONST.4

REVISIONS 8/17/99

NAD 83/
NA 2011

-L- 10+00

-L- 15+00

-L- 20+00

BEGIN PROJECT
-L- POT Sta.14+00.00

DOUBLE GUARDRAIL POSTS TO SPAN
AND AVOID CONFLICT WITH EXISTING
AT&T UTILITY VAULT

-Y- POT Sta.10+00.00 =
-L- POT Sta.15+89.88

-L- POT Sta.10+00.00

END GRADE
-Y- Sta.10+90.00

BEGIN CONSTRUCTION
-Y- POT Sta.10+14.05 =
-L- STA.15+81.13

TIE TO EXISTING GUARDRAIL
-Y- STA.10+94.23 (LT)

END CONSTRUCTION
-Y- POT Sta.11+58.98
TIE TO EXISTING SIDEWALK

-Y- POT Sta.13+03.50

-L- PC Sta.20+21.00

END PROJECT
-L- POT Sta.22+50.00

-L- PT Sta.22+30.38

(1) SMITH CREEK BOATYARD INC
DB 5311PG 2603
DB 5311 PG 2618
DB 5354 PG 1312
DB 5570 PG 842
DB 1551PG 778
MB 52 PG 226
MB 53 PG 129

(2) ELIZABETH P. ADAMS HEIRS
DB 2899 PG 1663

(3) R A PARSELY HEIRS
DB 2899 PG 1663
DB 68 PG 197 (NOT IN SYSTEM)

(4) NCDOT
DB 3076 PG 420
DB 2838 PG 31
MB 7 PG 79

(5) E. W. GODWIN SONS INC.
DB 1939 PG 65
DB 3153 PG 979
DB 1865 PG 143
DB 1622 PG 785

(6) CORBETT PACKAGE COMPANY
DB 3450 PG 160
DB 3060 PG 854
DB 436 PG. 119

US 17 & NC 133 CORNELIUS HARNETT DRIVE 30' BST

US 17 & NC 133 CASTLE HAYNE ROAD 30' BST.

MILTON STREET (NO OPEN)

CONC BRIDGE DECK

ABANDONED 6" DI ALUM SLUDGE LINE

SMITH CREEK EBB FLOOD

WOODS

APPROXIMATE LOCATION OF EXISTING 8" FSS LINE

SBT UTILITY EASEMENT DB 1622 PG 787

UTILITY EASEMENT MB 52 PG 226 DB 1551PG 778

ACCESS EASEMENT DB 5354 PG 1312

72" CHL 35BW

2' L X 6' W X 7' D VAULT (AT&T)

EST 1 TON CL B RIP RAP
EST 5 SY GEOTEXTILE

REMOVE EXISTING BRIDGE 15" RCP III

15" CAAP w/ 2 ELBOWS

FL GR 2GI
15" RCP III
CB-G

EXCAVATION LIMITS

EST 2 TON CL B RIP RAP
EST 7 SY GEOTEXTILE

SPECIAL LATERAL 'V' DITCH
SEE DETAIL A

SPECIAL LATERAL 'V' DITCH
SEE DETAIL B

SPECIAL LATERAL 'V' DITCH
SEE DETAIL C

RETAIN

REMOVE SOD/GR

CLEAN OUT EXISTING RCP OUTLET AS NECESSARY TO TIE TO PROPOSED DITCH

NO ACCESS UNKNOWN INV'S

BILLBOARD

HTR BUS

JS BR BUS

CONC

NOTE: THE OUTSIDE BUFFER, WETLAND OR WATER BOUNDARY SHALL BE CLEARLY MARKED BY HIGHLY VISIBLE FENCING (ORANGE SAFETY FENCE)

NOTE: UTILIZE FLOATING TURBIDITY CURTAIN AS NECESSARY.

CLEARING AND GRUBBING EROSION CONTROL FOR CONSTRUCTION SHEET 4

NOTE: UTILIZE COIR FIBER MATTING ADJACENT TO WETLANDS/JURISDICTIONAL AREAS, AND AS DIRECTED

*SBG: BEGIN 16+88.83 LT END 16+98.83 LT
**SBG: BEGIN 19+90.17 LT END 20+00.17 LT

DETAIL A
SPECIAL LATERAL 'V' DITCH
(Not to Scale)

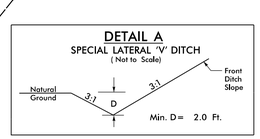

Min. D= 2.0 Ft.

FROM -L- STA. 21+50 TO STA. 22+32 RT

DETAIL B
SPECIAL LATERAL 'V' DITCH
(Not to Scale)

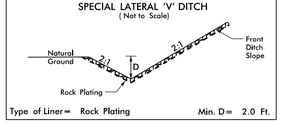

Type of Liner= Rock Plating Min. D= 2.0 Ft.

FROM STA. -L- 20+01 TO STA. 21+25 RT
ROCK PLATING REQUIRED FOR SLOPES
STEEPER THAN 3:1

DETAIL C
SPECIAL LATERAL 'V' DITCH
(Not to Scale)

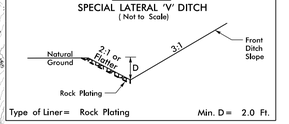

Type of Liner= Rock Plating Min. D= 2.0 Ft.

FROM STA. -L- 21+25 TO STA. 21+50 RT
ROCK PLATING REQUIRED FOR SLOPES
STEEPER THAN 3:1

NOTE: UTILIZE SPECIAL STILLING BASIN(S) AS STILLING BASIN(S) WHERE APPLICABLE.

NOTE: PLACE TEMPORARY ROCK SEDIMENT DAMS TYPE – B AND TEMPORARY ROCK SILT CHECKS TYPE – A AT DRAINAGE OUTLETS.

NOTES: ANY DEVIATION FROM OPTIONS GIVEN WILL REQUIRE PRIOR APPROVAL BY ENGINEER.

ADDITIONAL EROSION CONTROL DEVICES MAY NEED TO BE INSTALLED AS DIRECTED BY THE ENGINEER.

03-JUN-2021 13:47
C:\Projects\B-4590\01\Design\Plan Sheets\B-4590_EC_psh_EC-4.dgn
$$USERNAME$$

DocuSign Envelope ID: 067A235F-0381-4EA9-9E6C-859425BCECAB

BRIDGE NO. 640029

PROJECT REFERENCE NO.	SHEET NO.
B-4590	EC-5/CONST.4

8/17/99

REVISIONS

NAD 83/
NA 2011

-L- 10+00

-L- 15+00

-L- 20+02

BEGIN PROJECT
-L- POT Sta.14+00.00

DOUBLE GUARDRAIL POSTS TO SPAN
AND AVOID CONFLICT WITH EXISTING
AT&T UTILITY VAULT

-Y- POT Sta.10+00.00 =
-L- POT Sta.15+89.88

(1) SMITH CREEK BOATYARD INC
DB 5311PG 2603
DB 5311 PG 2618
DB 5354 PG 1312
DB 5570 PG 842
DB 1551PG 778
MB 52 PG 226
MB 53 PG 129

(2) ELIZABETH P. ADAMS HEIRS
DB 2899 PG 1663

(3) R A #PARSELY #HEIRS
DB 2899 PG 1663
DB 68 PG 197 (NOT IN SYSTEM)

(4) NCDOT
DB 3076 PG 420
DB 2838 PG 31
MB 7 PG 79

(5) E. W. GODWIN SONS INC.
DB 1939 PG 65
DB 3153 PG 979
DB 1865 PG 143
DB 1622 PG 785

(6) CORBETT PACKAGE COMPANY
DB 3450 PG 160
DB 3060 PG 854
DB 436 PG 119

-L- PC Sta. 20+21.00

-L- PT Sta. 22+30.38

END PROJECT
-L- POT Sta.22+50.00

-L- POT Sta. 10+00.00

END GRADE
-Y- Sta.10+90.00

BEGIN CONSTRUCTION
-Y- POT Sta.10+14.05 =
-L- STA.15+81.13

TIE TO EXISTING GUARDRAIL
-Y- STA.10+94.23 (LT)

END CONSTRUCTION
-Y- POT Sta.11+58.98
TIE TO EXISTING SIDEWALK

-Y- POT Sta. 13+03.50

EST 1 TON CL B RIP RAP
EST 5 SY GEOTEXTILE

REMOVE EXISTING BRIDGE
15" RCP III

EST 1 TON CL B RIP RAP
EST 5 SY GEOTEXTILE

EST 2 TON CL B RIP RAP
EST 7 SY GEOTEXTILE

EXCAVATION LIMITS

EXCAVATION LIMITS

SPECIAL LATERAL 'V' DITCH
SEE DETAIL A

SPECIAL LATERAL 'V' DITCH
SEE DETAIL C

SPECIAL LATERAL 'V' DITCH
SEE DETAIL B

RETAIN

INSTALL 165 SY. MATTING IN PROPOSED DITCH LINE.
-L- STA. 21+00 to -L- STA. 22+06 RT

CLEAN OUT EXISTING RCP OUTLET AS NECESSARY TO TIE TO PROPOSED DITCH

*SBG: BEGIN 16+88.83 LT END 16+98.83 LT
**SBG: BEGIN 19+90.17 LT END 20+00.17 LT

NOTE: UTILIZE FLOATING TURBIDITY CURTAIN AS NECESSARY.

NOTE: UTILIZE SPECIAL STILLING BASIN(S) AS STILLING BASIN(S) WHERE APPLICABLE.

NOTES: ANY DEVIATION FROM OPTIONS GIVEN WILL REQUIRE PRIOR APPROVAL BY ENGINEER.

ADDITIONAL EROSION CONTROL DEVICES MAY NEED TO BE INSTALLED AS DIRECTED BY THE ENGINEER.

NOTE: UTILIZE COIR FIBER MATTING ADJACENT TO WETLANDS/JURISDICTIONAL AREAS, AND AS DIRECTED

NOTE: THE OUTSIDE BUFFER, WETLAND OR WATER BOUNDARY SHALL BE CLEARLY MARKED BY HIGHLY VISIBLE FENCING (ORANGE SAFETY FENCE).

DETAIL A
SPECIAL LATERAL 'V' DITCH
(Not to Scale)

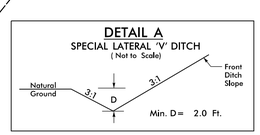

FROM -L- STA. 21+50 TO STA. 22+32 RT

DETAIL B
SPECIAL LATERAL 'V' DITCH
(Not to Scale)

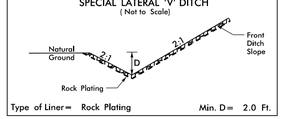

FROM STA. -L- 20+01 TO STA. 21+25 RT
ROCK PLATING REQUIRED FOR SLOPES STEEPER THAN 3:1

DETAIL C
SPECIAL LATERAL 'V' DITCH
(Not to Scale)

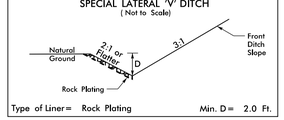

FROM STA. -L- 21+25 TO STA. 21+50 RT
ROCK PLATING REQUIRED FOR SLOPES STEEPER THAN 3:1

03-JUN-2021 13:49
C:\Users\...\Design\Plan Sheets\B-4590_EC_psh_EC-5.dgn
$$$$USERNAME$$$$

DocuSign Envelope ID: 067A235F-0381-4EA9-9E6C-859425BCECAB

TIP NO.	SHEET NO.
B-4590	SIGN-1

APPROVED: Charles J. Young
DATE: 6/5/2021

SEAL
NORTH CAROLINA PROFESSIONAL SEAL 046062 ENGINEER CHARLES J. YOUNG

DOCUMENT NOT CONSIDERED FINAL UNLESS ALL SIGNATURES COMPLETED

STATE OF NORTH CAROLINA
DEPARTMENT OF TRANSPORTATION

SIGNING PLAN
NEW HANOVER COUNTY

LOCATION: BRIDGE NO. 640029 OVER SMITH CREEK ON SR 2812 (CASTLE HAYNE ROAD)

T.I.P.: B-4590

CONTRACT: DC00249

ROADWAY STANDARD DRAWING

THE FOLLOWING ROADWAY STANDARDS AS APPEAR IN "ROADWAY STANDARD DRAWINGS" - PROJECT SERVICES UNIT - N.C. DEPARTMENT OF TRANSPORTATION - RALEIGH, N.C., DATED JANUARY 2018 ARE APPLICABLE TO THIS PROJECT AND BY REFERENCE HEREBY ARE CONSIDERED A PART OF THESE PLANS:

STD. NO.	TITLE
903.10	GROUND MOUNTED SIGN SUPPORTS
904.10	ORIENTATION OF GROUND MOUNTED SIGNS
904.50	MOUNTING OF TYPE 'D', 'E' AND 'F' SIGNS ON 'U' CHANNEL POSTS

GENERAL NOTES

- SIGNS FURNISHED BY THE STATE
- ALL TYPE 'D' SIGNS SHALL BE MOUNTED ON TWO U-CHANNEL POSTS UNLESS OTHERWISE INDICATED ON THE PLANS.
- WHEN NOT STATIONED OR DIMENSIONED ON PLANS, ALL 'E' AND 'F' SIGNS SHALL BE FIELD LOCATED BY THE ENGINEER
- ALL EXISTING SIGNS ON "U" CHANNEL POST WITHIN THE PROJECT LIMITS SHALL BE REMOVED AND DISPOSED OF UNLESS OTHERWISE NOTED ON PLANS.
- WHEN EXISTING SIGNS ARE REMOVED AND INSTALLED ON NEW SUPPORTS, THE RE-ERECTION SHALL IMMEDIATELY FOLLOW THE REMOVAL.
- THE BACKGROUND FOR TYPE E & F SIGNS SHALL BE TYPE C REFLECTIVE SHEETING.
- SEE ROADWAY PLANS FOR GUARD/GUIDE RAIL DETAILS.

SUMMARY OF QUANTITIES

ITEM NO. DESC. NO.	ITEM NO. SECT. NO.	ITEM DESCRIPTION	QUANTITY	UNIT
4026000000	902	DEPARTMENT FURNISHED, TYPE D SIGN	20	S.F.
4026000000	902	DEPARTMENT FURNISHED, TYPE E SIGN	63	S.F.
4026000000	902	DEPARTMENT FURNISHED, TYPE F SIGN	22	S.F.
4072000000	903	SUPPORTS, 3 LB STEEL U-CHANNEL	210	L.F.
4096000000	904	SIGN ERECTION, TYPE D	5	EA.
4102000000	904	SIGN ERECTION, TYPE E	8	EA.
4108000000	904	SIGN ERECTION, TYPE F	1	EA.
4155000000	907	DISPOSAL OF SIGN SYSTEM, U-CHANNEL	15	EA.

INDEX

SHEET NO.	DESCRIPTION
SIGN-1	TITLE SHEET
SIGN-2	TYPE E AND F SIGNS
SIGN-3	SIGN DESIGN
SIGN-4	PROPOSED SIGNS
SIGN-5	EXISTING SIGNS

PLAN SUBMITTED TO: NCDOT DIVISION 3

DEREK R. PIELECH, PE — DIVISION 3 BRIDGE PROGRAM MANAGER

STATE OF NORTH CAROLINA DEPARTMENT OF TRANSPORTATION

Prepared in the Office of:
RS&H
ARCHITECTS-ENGINEERS-PLANNERS, INC.

CHARLES J. YOUNG, PE — PROJECT ENGINEER
NIKI E. AVGERINOS, EI — DESIGN ENGINEER

RS&H
NC FIRM LICENSE No: F-0493

6/4/2021
R:\Traffic\Signing\CADD\Signing Layout Plans\640029_sgn_tsh.dgn
User:YoungCJ

DocuSign Envelope ID: 067A235F-0381-4EA9-9E6C-859425BCECAB

TIP NO.	SHEET NO.
B-4590	SIGN-2

APPROVED: DocuSigned by: Charles J. Young
DATE: 6/5/2021

SEAL

NORTH CAROLINA PROFESSIONAL SEAL 046062 ENGINEER CHARLES J. YOUNG

DOCUMENT NOT CONSIDERED FINAL UNLESS ALL SIGNATURES COMPLETED

401 QUANTITY REQ'D 1



36 X 36
W14-1

ONE "U" POST PER SIGN

402 QUANTITY REQ'D 1



30 X 24
W16-3P

MOUNT BELOW SIGN 401
IN 1 INSTALLATION

403 QUANTITY REQ'D 1

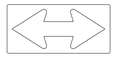

48 X 24
W1-7

TWO "U" POST PER SIGN

404 QUANTITY REQ'D 2



24 X 18
R3-17

ONE "U" POST PER SIGN

405 QUANTITY REQ'D 1



24 X 30
R2-1

ONE "U" POST PER SIGN

406 QUANTITY REQ'D 1



24 X 30
R2-1

ONE "U" POST PER SIGN

407 QUANTITY REQ'D 1



36 X 36
R1-1

ONE "U" POST PER SIGN

408 QUANTITY REQ'D 1



36 X 36
W12-2

ONE "U" POST PER SIGN

409 QUANTITY REQ'D 1



30 X 24
W16-2P

MOUNT BELOW SIGN 408
IN 1 INSTALLATION

501 QUANTITY REQ'D 1

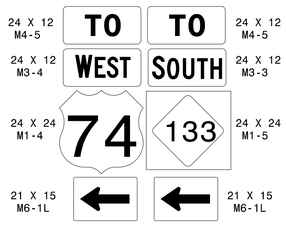

24 X 12
M4-5
24 X 12
M4-5
24 X 12
M3-4
24 X 12
M3-3
24 X 24
M1-4
24 X 24
M1-5
21 X 15
M6-1L
21 X 15
M6-1L

TWO "U" POST PER SIGN

RS&H
NC FIRM LICENSE No: F-0493

TYPE "E" AND "F" SIGNS

6/4/2021
R:\Traffic\Signing\CADD\Signing Layout Plans\640029_Sgn_e_signs.dgn
User:YoungCJ

DocuSign Envelope ID: 067A235F-0381-4EA9-9E6C-859425BCECAB

TIP NO.	SHEET NO.
B-4590	SIGN-3

APPROVED: Docusigned by: Charles J. Young DBE59D0EC0C04F1...

DATE: 6/5/2021

SEAL

NORTH CAROLINA PROFESSIONAL SEAL 046062 ENGINEER CHARLES J. YOUNG

DOCUMENT NOT CONSIDERED FINAL UNLESS ALL SIGNATURES COMPLETED

SIGN NUMBER: 303 | BACKG COLOR: Green | COPY COLOR: White

TYPE: D

QUANTITY: 2

SIGN WIDTH: 4'-0"
HEIGHT: 1'-0"
TOTAL AREA: 4.0 Sq.Ft.

BORDER TYPE: FLUSH
RECESS: 0"
WIDTH: 0.5"
RADII: 1.5"

NO. Z BARS:
LENGTH:

SYMBOL	X	Y	WID	HT

MAT'L: 0.125" (3.2 mm) ALUMINUM

USE NOTES: 1,2

1. Legend and border(except those that are colored black) shall be direct applied Grade C sheeting.
2. Background shall be Grade C retroreflective sheeting.

DESIGN BY: ACP | CHECKED BY: | Oct 30, 2018
PROJECT ID: B-4590 | LOCATION: NEW HANOVER CO. | DIV: 3

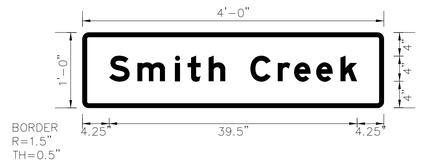

Spacing Factor is 1 unless specified otherwise

LETTER POSITIONS

Letter spacings are to start of next letter

		S	m	i	t	h		C	r	e	e	k																	Series/Size Text Length
	4.3	4.5	6	2	3.4	2.6	4	4.4	2.6	3.5	3.9	2.6	4.3																EM 2000 39.5

FILENAME: 640026_sgn_design_3 | NORTH CAROLINA D.O.T. SIGN DETAIL

SIGN NUMBER: 302 | BACKG COLOR: Green | COPY COLOR: White

TYPE: D

QUANTITY: 1

SIGN WIDTH: 4'-0"
HEIGHT: 1'-6"
TOTAL AREA: 6.0 Sq.Ft.

BORDER TYPE: FLUSH
RECESS: 0"
WIDTH: 0.5"
RADII: 1.5"

NO. Z BARS:
LENGTH:

SYMBOL	X	Y	WID	HT

MAT'L: 0.125" (3.2 mm) ALUMINUM

USE NOTES: 1,2

1. Legend and border(except those that are colored black) shall be direct applied Grade C sheeting.
2. Background shall be Grade C retroreflective sheeting.

DESIGN BY: ACP | CHECKED BY: | Oct 30, 2018
PROJECT ID: B-4590 | LOCATION: NEW HANOVER CO. | DIV: 3



Spacing Factor is 1 unless specified otherwise

LETTER POSITIONS

Letter spacings are to start of next letter

		W	i	l	m	i	n	g	t	o	n																		Series/Size Text Length
	6.1	5.2	2.4	2.4	6	2.4	3.9	3.8	3	4	2.6	6.1																	EM 2000 35.7
		C	I	T	Y		L	I	M	I	T																		
	13.7	2.7	0.9	2	2.6	3	2.3	1.2	3.1	0.9	1.9	13.7																	D 2000 20.6

FILENAME: 640026_sgn_design_3a | NORTH CAROLINA D.O.T. SIGN DETAIL

SIGN NUMBER: name | BACKG COLOR: White | COPY COLOR RGB[39,39,39]

TYPE: D

QUANTITY: 2

SIGN WIDTH: 2'-0"
HEIGHT: 2'-6"
TOTAL AREA: 5.0 Sq.Ft.

BORDER TYPE: FLUSH
RECESS: 0.38"
WIDTH: 0.5"
RADII: 1.5"

NO. Z BARS:
LENGTH:

SYMBOL	X	Y	WID	HT

MAT'L: 0.063" (1.60 mm) ALUMINUM

USE NOTES:

1. Legend and border(except those that are colored black) shall be direct applied Grade C sheeting.
2. Background shall be Grade C reflective sheeting.

DESIGN BY: ACP | CHECKED BY: | Feb 03, 2020
PROJECT ID: B-4590 | LOCATION: NEW HANOVER CO. | DIV: 3

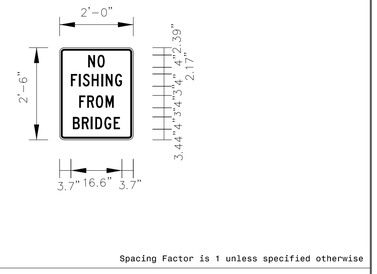

Spacing Factor is 1 unless specified otherwise

LETTER POSITIONS

Letter spacings are to start of next letter

		N	O																										Series/Size Text Length
	9.3	3	2.4	9.3																									C 2000 5.4
		F	I	S	H	I	N	G																					
	3.7	2.6	1.2	2.9	3.1	1.4	3	2.2	3.7																				C 2000 16.6
		F	R	O	M																								
	6.4	2.6	2.8	3.2	2.6	6.4																							C 2000 11.2
		B	R	I	D	G	E																						
	4.3	2.9	2.9	1.4	3	3	2	4.3																					C 2000 15.3

FILENAME: 640026_sgn_design_nofish | NORTH CAROLINA D.O.T. SIGN DETAIL

RS&H
NC FIRM LICENSE No: F-0493

SIGN DESIGNS

6/4/2021
R:\Traffic\Signing\CADD\Signing Layout Plans\640026_sgn_design_3.dgn
User:YoungCJ

DocuSign Envelope ID: 067A235F-0381-4EA9-9E6C-859425BCECAB

TIP NO.	SHEET NO.
B-4590	SIGN-4

APPROVED: Charles J. Young
DATE: 6/5/2021

SEAL

NORTH CAROLINA PROFESSIONAL SEAL 046062 ENGINEER CHARLES J. YOUNG

DOCUMENT NOT CONSIDERED FINAL UNLESS ALL SIGNATURES COMPLETED

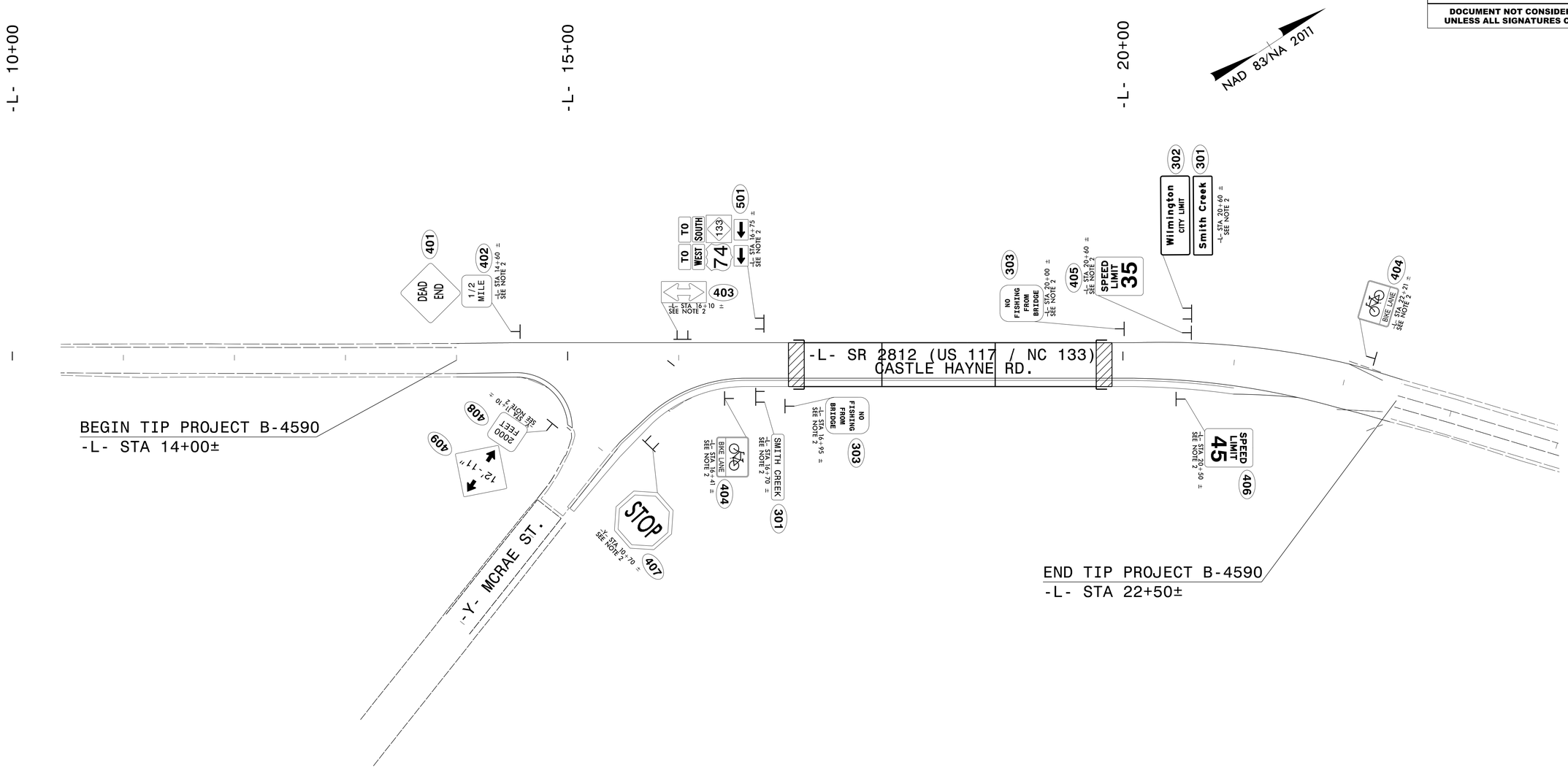

PROJECT NOTES

1 DISPOSAL OF SIGN SYSTEM, U-CHANNEL
2 SIGN ERECTION, TYPE D, E, AND F

RS&H
NC FIRM LICENSE No: F-0493

PROPOSED SIGNS

6/4/2021
R:\Traffic\Signing\CADD\Signing Layout Plans\640029_sgn_prop_dtl_01.dgn
User:YoungCJ

DocuSign Envelope ID: 067A235F-0381-4EA9-9E6C-859425BCECAB

TIP NO.	SHEET NO.
B-4590	SIGN-5

APPROVED: Charles J. Young
DATE: 6/5/2021

SEAL

NORTH CAROLINA PROFESSIONAL SEAL 046062 ENGINEER CHARLES J. YOUNG

DOCUMENT NOT CONSIDERED FINAL UNLESS ALL SIGNATURES COMPLETED

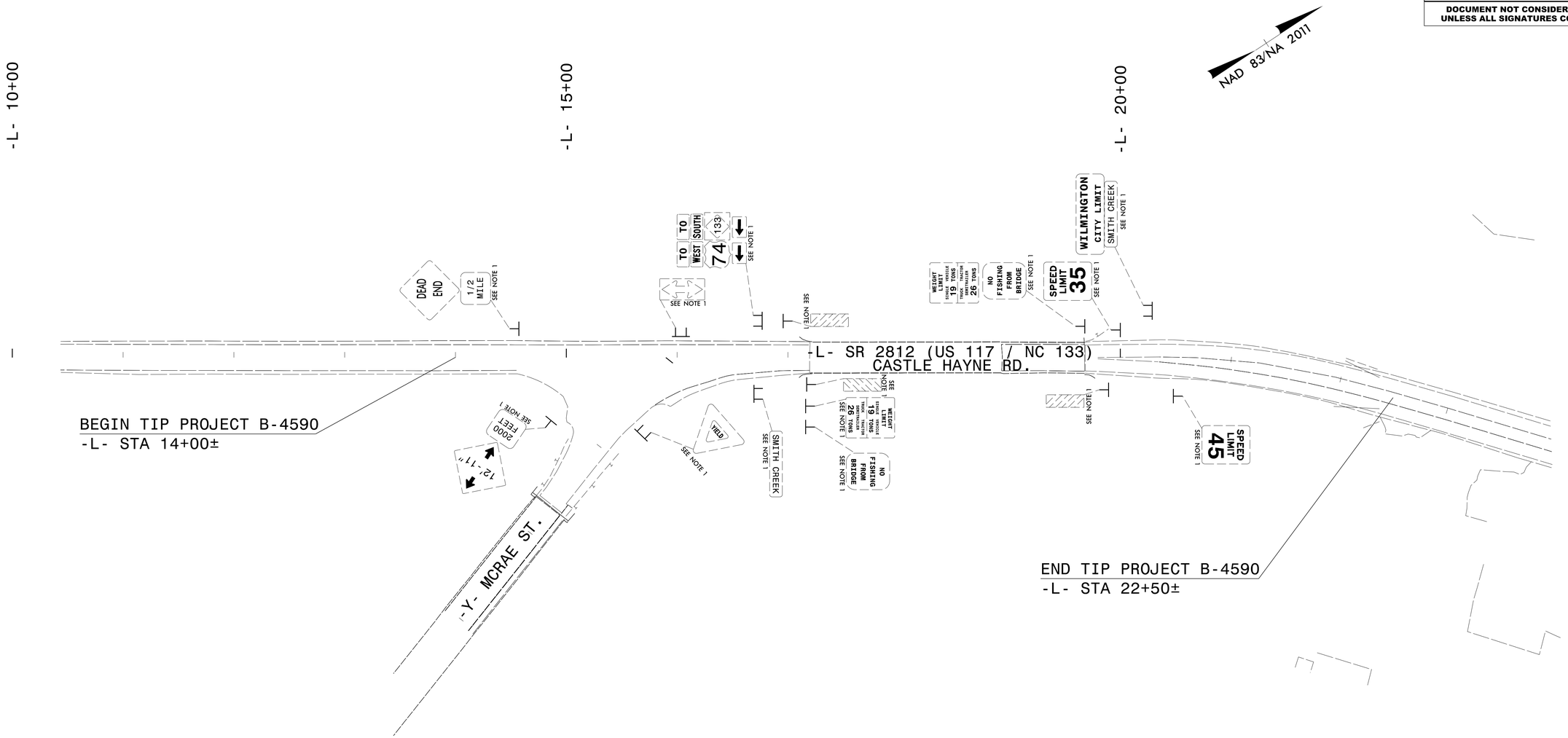

PROJECT NOTES

1	DISPOSAL OF SIGN SYSTEM, U-CHANNEL
2	SIGN ERECTION, TYPE D, E, AND F

RS&H
NC FIRM LICENSE No: F-0493

EXISTING SIGNS

6/4/2021
R:\Traffic\Signing\CADD\Signing Layout Plans\640029_sgn_exist_dtl_01.dgn
User:YoungCJ

DocuSign Envelope ID: 067A235F-0381-4EA9-9E6C-859425BCECAB

09/08/99

TIP PROJECT: B–4590

CONTRACT: DC00249

STATE OF NORTH CAROLINA
DIVISION OF HIGHWAYS

T.I.P. NO.	SHEET NO.
B–4590	UC–1

UTILITY CONSTRUCTION PLANS
NEW HANOVER COUNTY

LOCATION: BRIDGE NO. 640029 OVER SMITH CREEK
ON SR 2812/US 117/NC 133 (CASTLE HAYNE ROAD)

TYPE OF WORK: WATER LINE RELOCATION

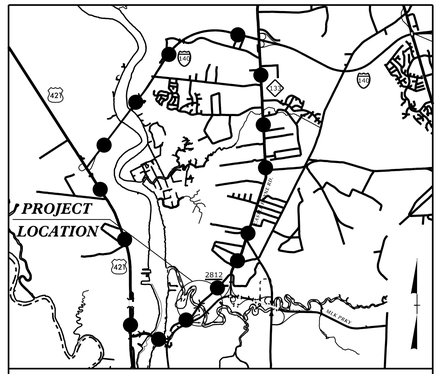

NAD 83/
NA 2011

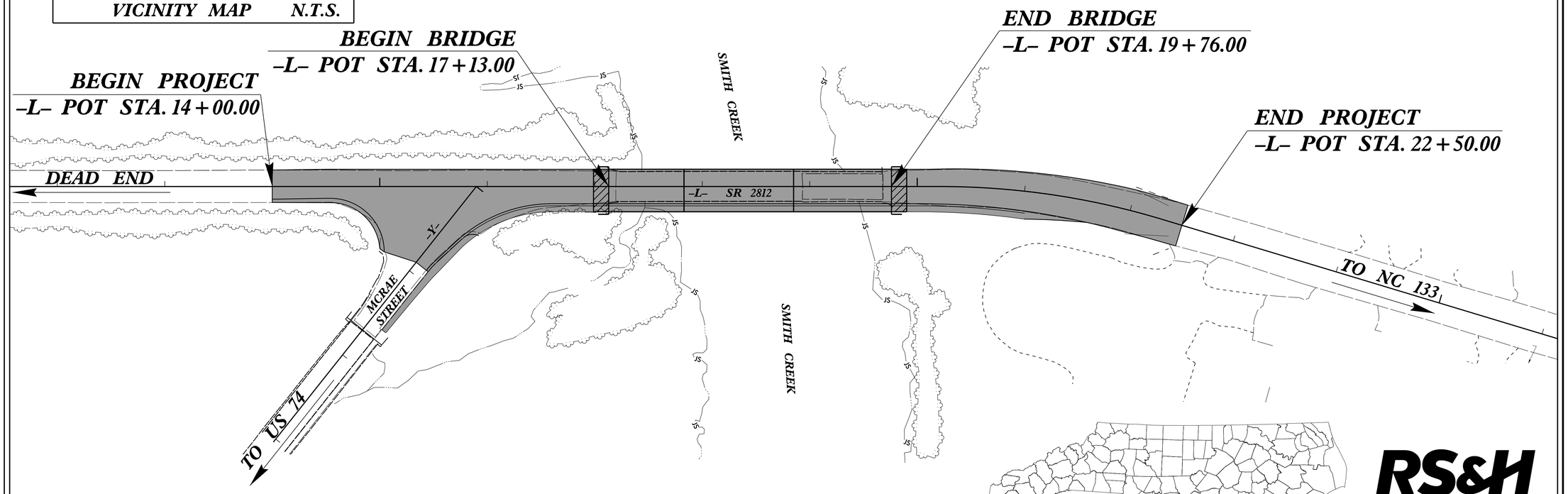

THERE IS NO CONTROL OF ACCESS ON THIS PROJECT.
THIS PROJECT IS WITHIN THE CITY OF WILMINGTON MUNICIPAL BOUNDARIES.
CLEARING ON THIS PROJECT SHALL BE PERFORMED TO THE LIMITS ESTABLISHED BY MODIFIED METHOD III.

RS&H

DOCUMENT NOT CONSIDERED FINAL UNLESS ALL SIGNATURES COMPLETED

GRAPHIC SCALES

50 25 0 50 100
PLANS

50 25 0 50 100
PROFILE (HORIZONTAL)

10 5 0 10 20
PROFILE (VERTICAL)

INDEX OF SHEETS

SHEET NO.:	DESCRIPTION:
UC–1	TITLE SHEET
UC–2	UTILITY SYMBOLOGY
UC–3	NOTES
UC–3A TO UC–3B	DETAILS
UC–4	UTILITY CONSTRUCTION SHEET
UC–5	PROFILE SHEET
UC–6	DRAINAGE PIPE SECTION SHEET

WATER AND SEWER OWNERS ON PROJECT

(A) CAPE FEAR PUBLIC UTILITY AUTHORITY

SEAL

NORTH CAROLINA PROFESSIONAL ENGINEER SEAL 049764 ALEXANDER R. VINSON

6/6/2021

PREPARED IN THE OFFICE OF
RS&H
ARCHITECTS–ENGINEERS–PLANNERS, INC.
8521 SIX FORKS ROAD, SUITE 400
RALEIGH, NC 27615

RICHARD BOLLINGER, PE
PROJECT ENGINEER

ALEX VINSON, PE
PROJECT DESIGN ENGINEER

DAVID LEONARD, PE
NCDOT CONTACT

04-JUN-2021 12:31
R:\Utilities\Engineering\UC\Proj\B-4590_UC_tsh.dgn
$$$$USERNAME$$$$

DocuSign Envelope ID: 067A235F-0381-4EA9-9E6C-859425BCECAB

PROJECT REFERENCE NO.	SHEET NO.
B-4590	UC-2

5/14/99

STATE OF NORTH CAROLINA
DIVISION OF HIGHWAYS

UTILITIES PLAN SHEET SYMBOLS

PROPOSED WATER SYMBOLS

- Water Line (Sized as Shown) — 12" WL
- 11¼ Degree Bend
- 22½ Degree Bend
- 45 Degree Bend
- 90 Degree Bend
- Plug
- Tee
- Cross
- Reducer
- Gate Valve — GV
- Butterfly Valve — BV
- Tapping Valve — TGV
- Line Stop — LS
- Line Stop with Bypass — LS/BP
- Blow Off — BO
- Fire Hydrant — PFH
- Relocate Fire Hydrant — RFH
- Remove Fire Hydrant — REM FH
- Water Meter — PWM
- Relocate Water Meter — RWM
- Remove Water Meter — REM WM
- Water Pump Station — PS(W)
- RPZ Backflow Preventer — PRPZ
- DCV Backflow Preventer — PBFP
- Relocate RPZ Backflow Preventer — RRPZ
- Relocate DCV Backflow Preventer — RBFP

PROPOSED SEWER SYMBOLS

- Gravity Sewer Line (Sized as Shown) — 12" SS
- Force Main Sewer Line (Sized as Shown) — 12" FSS
- Manhole (Sized per Note)
- Sewer Pump Station — PS(SS)

PROPOSED MISCELLANOUS UTILITIES SYMBOLS

- Power Pole
- Telephone Pole
- Joint Use Pole
- Telephone Pedestal — TEL PED
- Utility Line by Others (Type as Shown) — PROP O/H POW LINES
- Trenchless Installation — 12" TL INSTALL
- Encasement by Open Cut — 24" ENCAS BY OC
- Encasement — 24" ENCASEMENT
- Thrust Block
- Air Release Valve — AR
- Utility Vault — UV
- Concrete Pier — CP
- Steel Pier — SP
- Plan Note — NOTE
- Pay Item Note — PAY ITEM

EXISTING UTILITIES SYMBOLS

- Power Pole
- Telephone Pole
- Joint Use Pole
- Utility Pole
- Utility Pole with Base
- H-Frame Pole
- Power Transmission Line Tower
- Water Manhole
- Power Manhole
- Telephone Manhole
- Sanitary Sewer Manhole
- Hand Hole for Cable
- Power Transformer
- Telephone Pedestal — T
- CATV Pedestal — C
- Gas Valve
- Gas Meter
- Located Miscellaneous Utility Object
- Abandoned According to Utility Records — AATUR
- End of Information — E.O.I.
- *Underground Power Line — P
- *Underground Telephone Cable — T
- *Underground Telephone Conduit — TC
- *Underground Fiber Optics Telephone Cable — T FO
- *Underground TV Cable — TV
- *Underground Fiber Optics TV Cable — TV FO
- *Underground Gas Pipeline — G
- Aboveground Gas Pipeline — A/G Gas
- *Underground Water Line — W
- Aboveground Water Line — A/G Water
- *Underground Gravity Sanitary Sewer Line — SS
- Aboveground Gravity Sanitary Sewer Line — A/G Sanitary Sewer
- *Underground SS Forced Main Line — FSS
- Underground Unknown Utility Line — ?UTL
- SUE Test Hole
- Water Meter
- Water Valve
- Fire Hydrant
- Sanitary Sewer Cleanout

*For Existing Utilities

- Utility Line Drawn from Record (Type as Shown) — W
- Designated Utility Line (Type as Shown) — W

REV: 2/1/2012

05-SEP-2018 15:50
R:\Utilities\Engineering\UC\Proj\B4590_UC_details.dgn
$$$$USERNAME$$$$

DocuSign Envelope ID: 067A235F-0381-4EA9-9E6C-859425BCECAB

5/14/99

UTILITY CONSTRUCTION

PROJECT REFERENCE NO.	SHEET NO.
B-4590	UC-3
DESIGNED BY: ARV	
DRAWN BY: ARV	
CHECKED BY: RLB	
APPROVED BY:	
REVISED:	
NORTH CAROLINA DEPARTMENT OF TRANSPORTATION	
UTILITIES ENGINEERING SEC. PHONE:(919)707-6690 FAX:(919)250-4151	UTILITY CONSTRUCTION PLANS ONLY

NORTH CAROLINA PROFESSIONAL ENGINEER SEAL 049764 ENGINEER ALEXANDER R. VINSON
Alexander R. Vinson
E70C4E0B942E...
6/6/2021

UTILITY CONSTRUCTION

GENERAL NOTES:

1. THE PROPOSED UTILITY CONSTRUCTION SHALL MEET THE APPLICABLE REQUIREMENTS OF THE NC DEPARTMENT OF TRANSPORTATION'S "STANDARD SPECIFICATIONS FOR ROADS AND STRUCTURES" DATED JANUARY 2018.

2. THE EXISTING UTILITIES BELONG TO
CAPE FEAR PUBLIC UTILITY AUTHORITY
.

3. ALL WATER LINES TO BE INSTALLED WITHIN COMPLIANCE OF THE RULES AND REGULATIONS OF THE NORTH CAROLINA DEPARTMENT OF ENVIRONMENTAL QUALITY, DIVISION OF WATER RESOURCES, PUBLIC WATER SUPPLY SECTION. ALL SEWER LINES TO BE INSTALLED WITHIN COMPLIANCE OF THE RULES AND REGULATIONS OF THE NORTH CAROLINA DEPARTMENT OF ENVIRONMENT QUALITY, DIVISION OF WATER RESOURCES, WATER QUALITY SECTION. PERFORM ALL WORK IN ACCORDANCE WITH THE APPLICABLE PLUMBING CODES.

4. THE UTILITY OWNER OWNS THE EXISTING UTILITY FACILITIES AND WILL OWN THE NEW UTILITY FACILITIES AFTER ACCEPTANCE BY THE DEPARTMENT. THE DEPARTMENT OWNS THE CONSTRUCTION CONTRACT AND HAS ADMINISTRATIVE AUTHORITY. COMMUNICATIONS AND DECISIONS BETWEEN THE CONTRACTOR AND UTILITY OWNER ARE NOT BINDING UPON THE DEPARTMENT OR THIS CONTRACT UNLESS AUTHORIZED BY THE ENGINEER. AGREEMENTS BETWEEN THE UTILITY OWNER AND CONTRACTOR FOR THE WORK THAT IS NOT PART OF THIS CONTRACT OR IS SECONDARY TO THIS CONTRACT ARE ALLOWED, BUT ARE NOT BINDING UPON THE DEPARTMENT.

5. PROVIDE ACCESS FOR THE DEPARTMENT PERSONNEL AND THE OWNER'S REPRESENTATIVES TO ALL PHASES OF CONSTRUCTION. NOTIFY DEPARTMENT PERSONNEL AND THE UTILITY OWNER TWO WEEKS PRIOR TO COMMENCEMENT OF ANY WORK AND ONE WEEK PRIOR TO SERVICE INTERRUPTION. KEEP UTILITY OWNERS' REPRESENTATIVES INFORMED OF WORK PROGRESS AND PROVIDE OPPORTUNITY FOR INSPECTION OF CONSTRUCTION AND TESTING.

6. THE PLANS DEPICT THE BEST AVAILABLE INFORMATION FOR THE LOCATION, SIZE, AND TYPE OF MATERIAL FOR ALL EXISTING UTILITIES. MAKE INVESTIGATIONS FOR DETERMINING THE EXACT LOCATION, SIZE, AND TYPE MATERIAL OF THE EXISTING FACILITIES AS NECESSARY FOR THE CONSTRUCTION OF THE PROPOSED UTILITIES AND FOR AVOIDING DAMAGE TO EXISTING FACILITIES. REPAIR ANY DAMAGE INCURRED TO EXISTING FACILITIES TO THE ORIGINAL OR BETTER CONDITION AT NO ADDITIONAL COST TO THE DEPARTMENT.

7. MAKE FINAL CONNECTIONS OF THE NEW WORK TO THE EXISTING SYSTEM WHERE INDICATED ON THE PLANS, AS REQUIRED TO FIT THE ACTUAL CONDITIONS, OR AS DIRECTED.

8. MAKE CONNECTIONS BETWEEN EXISTING AND PROPOSED UTILITIES AT TIMES MOST CONVENIENT TO THE PUBLIC, WITHOUT ENDANGERING THE UTILITY SERVICE, AND IN ACCORDANCE WITH THE UTILITY OWNER'S REQUIREMENTS. MAKE CONNECTIONS ON WEEKENDS, AT NIGHT, AND ON HOLIDAYS IF NECESSARY.

9. ALL UTILITY MATERIALS SHALL BE APPROVED PRIOR TO DELIVERY TO THE PROJECT. SEE 1500-7, " SUBMITTALS AND RECORDS" IN SECTION 1500 OF THE STANDARD SPECIFICATIONS.

PROJECT SPECIFIC NOTES:

1. ALL PROPOSED WATER LINE SHALL BE D.I.R.J. (DUCTILE IRON RESTRAINED JOINT) PIPE

2. THE CONTRACTOR SHALL NOTIFY THE ENGINEER AND OWNER A MINUMUM OF 7 DAYS IN ADVANCE OF A PLANNED SERVICE INTERRUPTION. THE CFPUA POINT OF CONTACT TO SCHEDULE SERVICE INTERRUPTIONS IS DAVID DAILEY, AT (910) 332-6626.

LIST OF STANDARD DRAWINGS

1515.01 WATER METER

11/1/2018
R:\Utilities\Engineering\UC\Proj\B4590_UC_details.dgn
8:33:23 AM

DocuSign Envelope ID: 067A235F-0381-4EA9-9E6C-859425BCECAB

5/14/99

PROJECT TYPICAL DETAILS

PROJECT REFERENCE NO.	SHEET NO.
B-4590	UC-3A
DESIGNED BY: ARV	
DRAWN BY: ARV	
CHECKED BY: RLB	
APPROVED BY:	
REVISED:	
NORTH CAROLINA DEPARTMENT OF TRANSPORTATION	
UTILITIES ENGINEERING SEC. PHONE:(919)707-6690 FAX:(919)250-4151	UTILITY CONSTRUCTION PLANS ONLY

NORTH CAROLINA PROFESSIONAL ENGINEER SEAL 049764 ALEXANDER R. VINSON 6/6/2021

UTILITY CONSTRUCTION

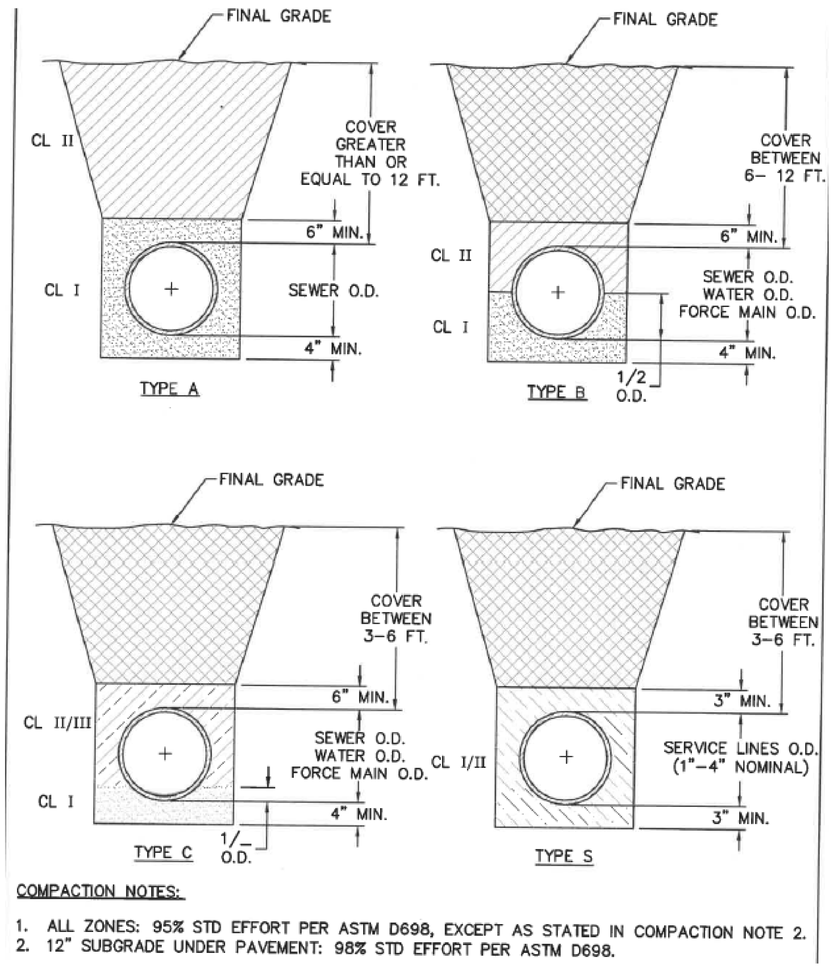

COMPACTION NOTES:

1. ALL ZONES: 95% STD EFFORT PER ASTM D698, EXCEPT AS STATED IN COMPACTION NOTE 2.
2. 12" SUBGRADE UNDER PAVEMENT: 98% STD EFFORT PER ASTM D698.

STANDARD PIPE BEDDING DETAILS

NOT TO SCALE

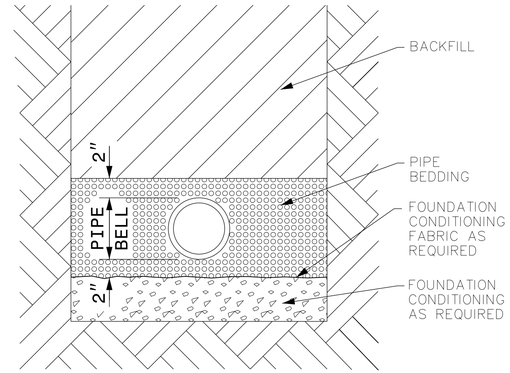

PLACE FOUNDATION CONDITIONING MATERIAL BELOW BEDDING IF REQUIRED, AS DIRECTED BY ENGINEER. PIPE BEDDED IN SELECT MATERIAL, CLASS II (TYPE 1) OR CLASS III. TRENCH BACKFILLED IN LOOSE 6" LAYERS COMPACTED TO TOP OF TRENCH USING LOCAL EXCAVATED MATERIAL IF APPROVED BY THE ENGINEER, OR SELECT MATERIAL. ALL MATERIAL SHALL BE FREE OF ROCKS, FOREIGN MATERIAL, AND FROZEN EARTH. COMPACTION SHALL BE TO APPROXIMATELY 95% DENSITY IN ACCORDANCE WITH AASHTO T-99 AS MODIFIED BY THE DEPARTMENT OF TRANSPORTATION.

GENERAL TRENCH DETAIL

NOT TO SCALE

11/1/2018
R:\Utilities\Engineering\UC\Proj\B4590_UC_details.dgn
8:25:25 AM

DocuSign Envelope ID: 067A235F-0381-4EA9-9E6C-859425BCECAB

5/14/99

PROJECT TYPICAL DETAILS

PROJECT REFERENCE NO.	SHEET NO.
B-4590	UC-3B
DESIGNED BY: ARV	
DRAWN BY: ARV	
CHECKED BY: RLB	
APPROVED BY:	
REVISED:	
NORTH CAROLINA DEPARTMENT OF TRANSPORTATION	
UTILITIES ENGINEERING SEC. PHONE:(919)707-6690 FAX:(919)250-4151	UTILITY CONSTRUCTION PLANS ONLY

NORTH CAROLINA PROFESSIONAL ENGINEER SEAL 049764 ALEXANDER R. VINSON 6/6/2021

UTILITY CONSTRUCTION

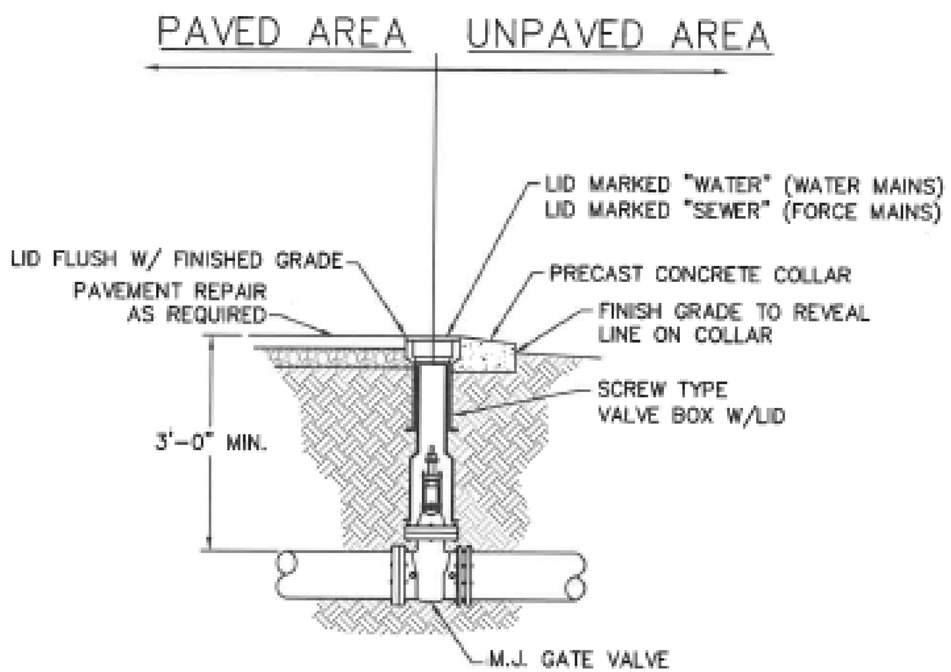

NOTES:

1. TRACER WIRE SHALL PENETRATE VALVE BOX THROUGH DRILLED HOLE APPROX. 6" BELOW GRADE WITH MINIMUM 2-FEET EXTRA LENGTH COILED IN BOX.

TYPICAL VALVE DETAIL

NOT TO SCALE

11/1/2018
R:\Utilities\Engineering\UC\Proj\B4590_UC_details.dgn
8:25:51 AM

DocuSign Envelope ID: 067A235F-0381-4EA9-9E6C-859425BCECAB

PROJECT REFERENCE NO.	SHEET NO.
B-4590	UC-4

DESIGNED BY: ARV
DRAWN BY: ARV
CHECKED BY: RLB
APPROVED BY:
REVISED:

NORTH CAROLINA DEPARTMENT OF TRANSPORTATION
UTILITIES ENGINEERING SEC.
PHONE:(919)707-6690
FAX:(919)250-4151

NORTH CAROLINA PROFESSIONAL SEAL 049764 ENGINEER ALEXANDER R. VINSON
6/6/2021

UTILITY CONSTRUCTION PLANS ONLY

UTILITY CONSTRUCTION

8/17/99

REVISIONS

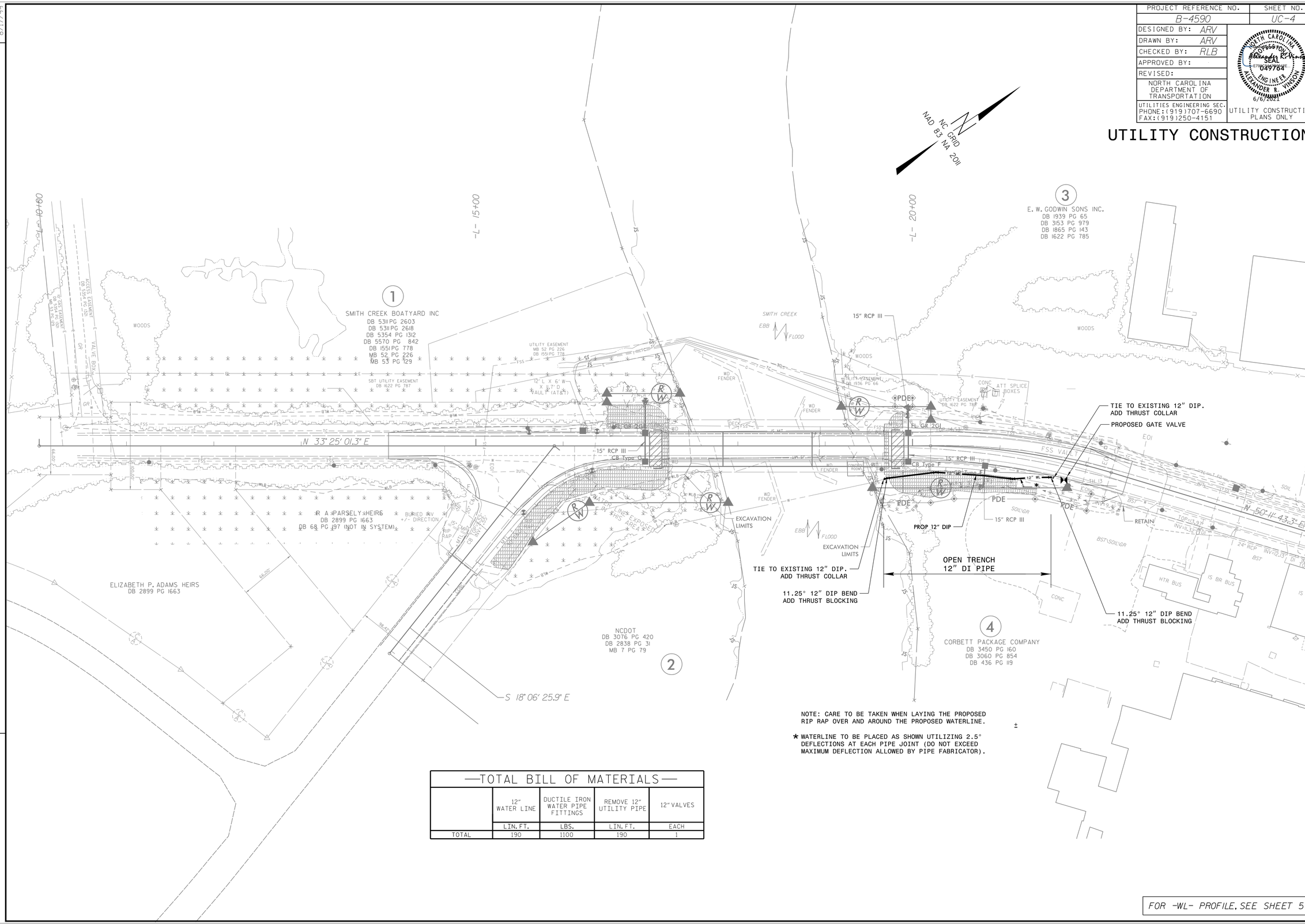

NOTE: CARE TO BE TAKEN WHEN LAYING THE PROPOSED RIP RAP OVER AND AROUND THE PROPOSED WATERLINE.

* WATERLINE TO BE PLACED AS SHOWN UTILIZING 2.5° DEFLECTIONS AT EACH PIPE JOINT (DO NOT EXCEED MAXIMUM DEFLECTION ALLOWED BY PIPE FABRICATOR).

TOTAL BILL OF MATERIALS

	12" WATER LINE	DUCTILE IRON WATER PIPE FITTINGS	REMOVE 12" UTILITY PIPE	12" VALVES
	LIN. FT.	LBS.	LIN. FT.	EACH
TOTAL	190	1100	190	1

FOR -WL- PROFILE, SEE SHEET 5

DocuSign Envelope ID: 067A235F-0381-4EA9-9E6C-859425BCECAB

PROJECT REFERENCE NO.	SHEET NO.
B-4590	UC-5

DESIGNED BY: ARV
DRAWN BY: ARV
CHECKED BY: RLB
APPROVED BY:
REVISED:

NORTH CAROLINA DEPARTMENT OF TRANSPORTATION
UTILITIES ENGINEERING SEC.
PHONE:(919)707-6690
FAX:(919)250-4151

NORTH CAROLINA PROFESSIONAL SEAL 049764 ENGINEER ALEXANDER R. VINSON
6/6/2021

UTILITY CONSTRUCTION PLANS ONLY

UTILITY CONSTRUCTION

-WL-

WATER LINE PROFILE

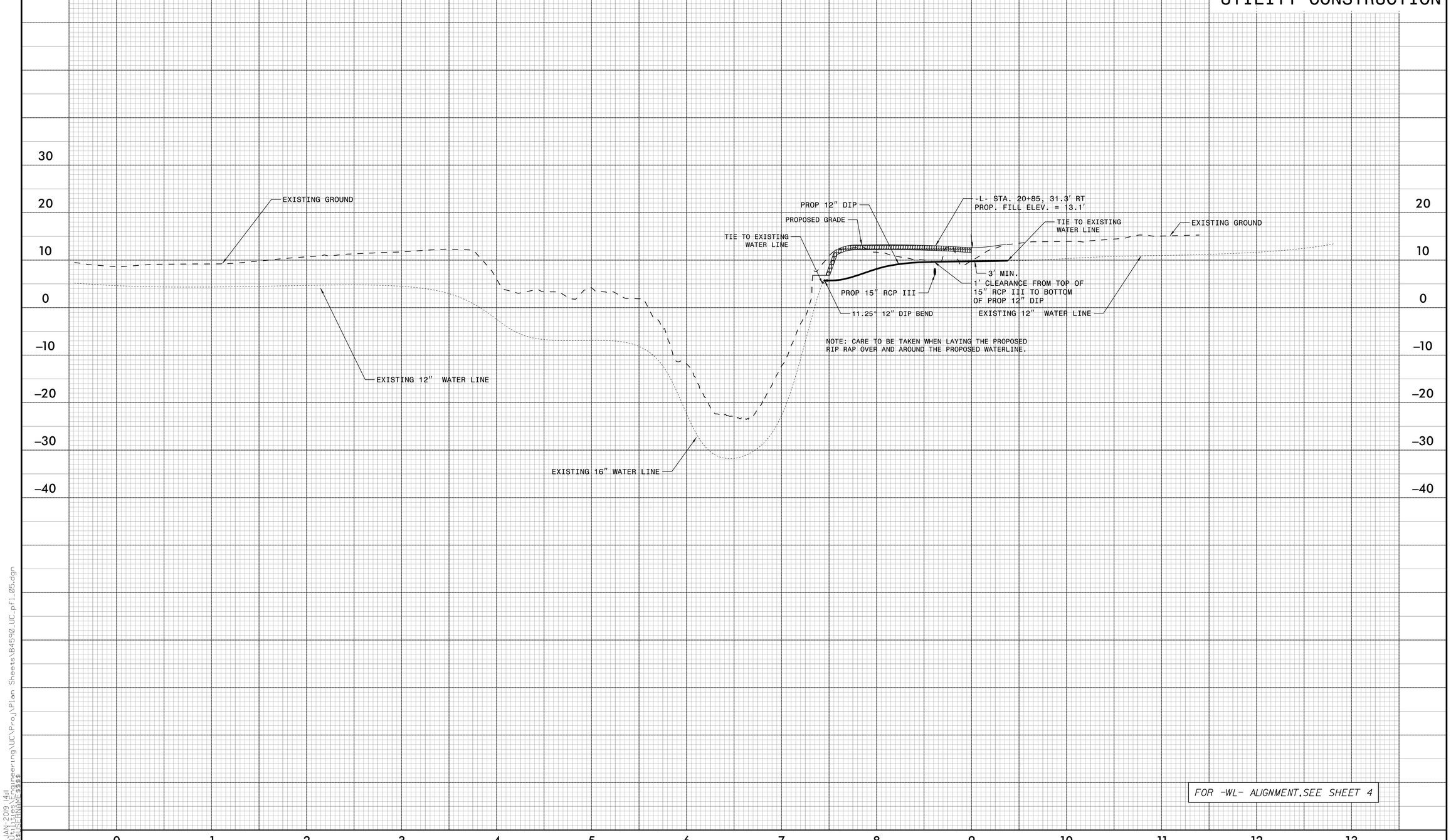

FOR -WL- ALIGNMENT,SEE SHEET 4

5/14/99

03-JAN-2019 14:11
R:\Utilities\Engineering\UC\Proj\Plan Sheets\B4590_UC_pfl_05.dgn
$$$$USERNAME$$$$

DocuSign Envelope ID: 067A235F-0381-4EA9-9E6C-859425BCECAB

PROJECT REFERENCE NO.	SHEET NO.
B-4590	UC-6

DESIGNED BY: ARV
DRAWN BY: ARV
CHECKED BY: RLB
APPROVED BY:
REVISED:

NORTH CAROLINA DEPARTMENT OF TRANSPORTATION
UTILITIES ENGINEERING SEC.
PHONE:(919)707-6690
FAX:(919)250-4151

NORTH CAROLINA PROFESSIONAL SEAL 049764 ENGINEER ALEXANDER R. VINSON
6/6/2021
UTILITY CONSTRUCTION PLANS ONLY

UTILITY CONSTRUCTION

DRAINAGE PIPE SECTION



5/14/99

10-DEC-2018 15:47
R:\Drainage\Ditch Revision\B4590_UC_xsc_6.dgn
$$$$USERNAME$$$$

DocuSign Envelope ID: 067A235F-0381-4EA9-9E6C-859425BCECAB

09/08/09

TIP PROJECT: B–4590

CONTRACT: DC00249

$$$$$$SYSTIME$$$$$$
$$$$$$USERNAME$$$$$$
$$$$$$

DocuSign Envelope ID: 067A235F-0381-4EA9-9E6C-859425BCECAB

PROJECT REFERENCE NO.	SHEET NO.
B-4590	U0-2
THIS SHEET CORRESPONDS TO RDY-4	

NOTE:
PRIOR TO COMMENCING WORK ON ANY TRENCHLESS INSTALLATION, PROVIDE A DESIGN FOR THE TRENCHLESS INSTALLATION CERTIFIED BY AN ENGINEER LICENSED BY THE STATE OF NORTH CAROLINA, AS REQUIRED BY SUBARTICLE 1550-3(B) OF THE STANDARD SPECIFICATIONS.

CENTURYLINK WILL INSTALL PERMANENT BORE AND REMOVE AERIAL LINE ONCE TEMP WORK BRIDGE IS REMOVED

UTILITIES BY OTHERS

ALL PROPOSED UTILITY WORK SHOWN ON THIS SHEET WILL BE DONE BY OTHERS. NO PAYMENT WILL BE MADE TO THE CONTRACTOR FOR PROPOSED UTILITY WORK SHOWN ON THIS SHEET.

NC GRID NAD 83 NA 2011

-L- 10+00

-L- 15+00

-L- 20+00

BEGIN PROJECT
-L- POT Sta.14+00.00

CENTURYLINK 3' X 2' X 3' BORE PIT TO INSTALL 3' X 2' X 3' HANDHOLE AFTER BORE IS COMPLETED

BEGIN BRIDGE
-L- POT Sta.17+13.00

DOUBLE GUARDRAIL POSTS TO SPAN AND AVOID CONFLICT WITH EXISTING AT&T UTILITY VAULT

-Y- POT Sta. 10+00.00 =
-L- POT Sta.15+89.88

1

CFPUA 3' X 2' X 3' BORE PIT TO INSTALL 3' X 2' X 3' HANDHOLE AFTER BORE IS COMPLETED

CONTRACTOR TO GRADE AROUND DEP LIGHT POLE

TEMP CFPUA POLE

TEMP AERIAL CFPUA AND CENTURYLINK FO CABLE TO REMAIN FOR DURATION OF PROJECT

CONTRACTOR TO REMOVE FENDERS AROUND TEMP AERIAL COMM LINES

TWO CFPUA 3' X 2' X 3' BORE PITS TO INSTALL 3' X 2' X 3' HANDHOLES AFTER BORE IS COMPLETED

3

E. W. GODWIN SONS INC.

-L- PC Sta. 20+21.00

END PROJECT
-L- POT Sta.22+50.00

-L- PT Sta. 22+30.38

CENTURYLINK DIRECTIONAL BORE (2) 1.25" INNERDUCTS

CFPUA DIRECTIONAL BORE (1) 1.25" INNERDUCT

END GRADE
-Y- Sta.10+90.00

2

CONTRACTOR TO GRADE AROUND DEP POLE

BEGIN CONSTRUCTION
-Y- POT Sta.10+14.05 =
-L- STAJ5+81J3

TIE TO EXISTING GUARDRAIL

END CONSTRUCTION
-Y- POT Sta.11+58.98
TIE TO EXISTING SIDEWALK

S 18°06'25.9" E

-Y- POT Sta.13+03.50

CENTURYLINK TO BORE (1)4"HDPE CONDUIT WITH (3) 1.25" INNERDUCTS APPROX. 25' FROM CENTER OF EXIST. ROAD, APPROX. 20' BELOW CHANNEL BED

CFPUA WILL OWN (1) 1.25' INNERDUCT WITHIN THE CENTURYLINK OWNED 4" CONDUIT

CFPUA DIRECTIONAL BORE (1) 1.25" INNERDUCT

4

CORBETT PACKAGE COMPANY

CENTURYLINK 3' X 2' X 3' BORE PIT TO INSTALL 3' X 2' X 3' HANDHOLE AFTER BORE IS COMPLETED

CENTURYLINK DIRECTIONAL BORE (2) 1.25" INNERDUCTS

N 33°25'01.3" E

N 60°11'43.3" E

BEGIN BRIDGE -L- POT Sta.17+13.00

END BRIDGE -L- POT Sta.19+76.00

SMITH CREEK

EBB

FLOOD

EXCAVATION LIMITS

REM

PROP O/H (FO) COMMUN LINES

PROP U/G COMMUN CONDUIT

PROP O/H PCN LINES

ATT SPLICE BOXES

CUTOFF MTL POST

FSS VAULT

NO ACCESS UNKNOWN INV'S

BILLBOARD

CONC BRIDGE DECK

ABANDONED 6" DI ALUM SLUDGE LINE

R A PARSELY HEIRS

ELIZABETH P. ADAMS HEIRS

BURIED INV +/- DIRECTION

WOODS

APPROXIMATE LOCATION OF EXISTING 8" FSS LINE

US 117 & NC 133 CORNELIUS HARNETT DRIVE 30' BST

US 117 & NC 133 CASTLE HAYNE ROAD 30' BST

CASTLE HAYNE ROAD 39' BST

15" RCP III

24" RCP

36" RCP RETAIN

72" CHL 35BW

12" CHL 35BW

EXISTING R/W

EXISTING EOP

EXISTING EOW

EXISTING EOS

EXISTING CONTROL LINE

DocuSign Envelope ID: 067A235F-0381-4EA9-9E6C-859425BCECAB

PROJECT REFERENCE NO.	SHEET NO.
B-4590	U0-3
ROADWAY DESIGN ENGINEER	HYDRAULICS ENGINEER

DOCUMENT NOT CONSIDERED FINAL UNLESS ALL SIGNATURES COMPLETED

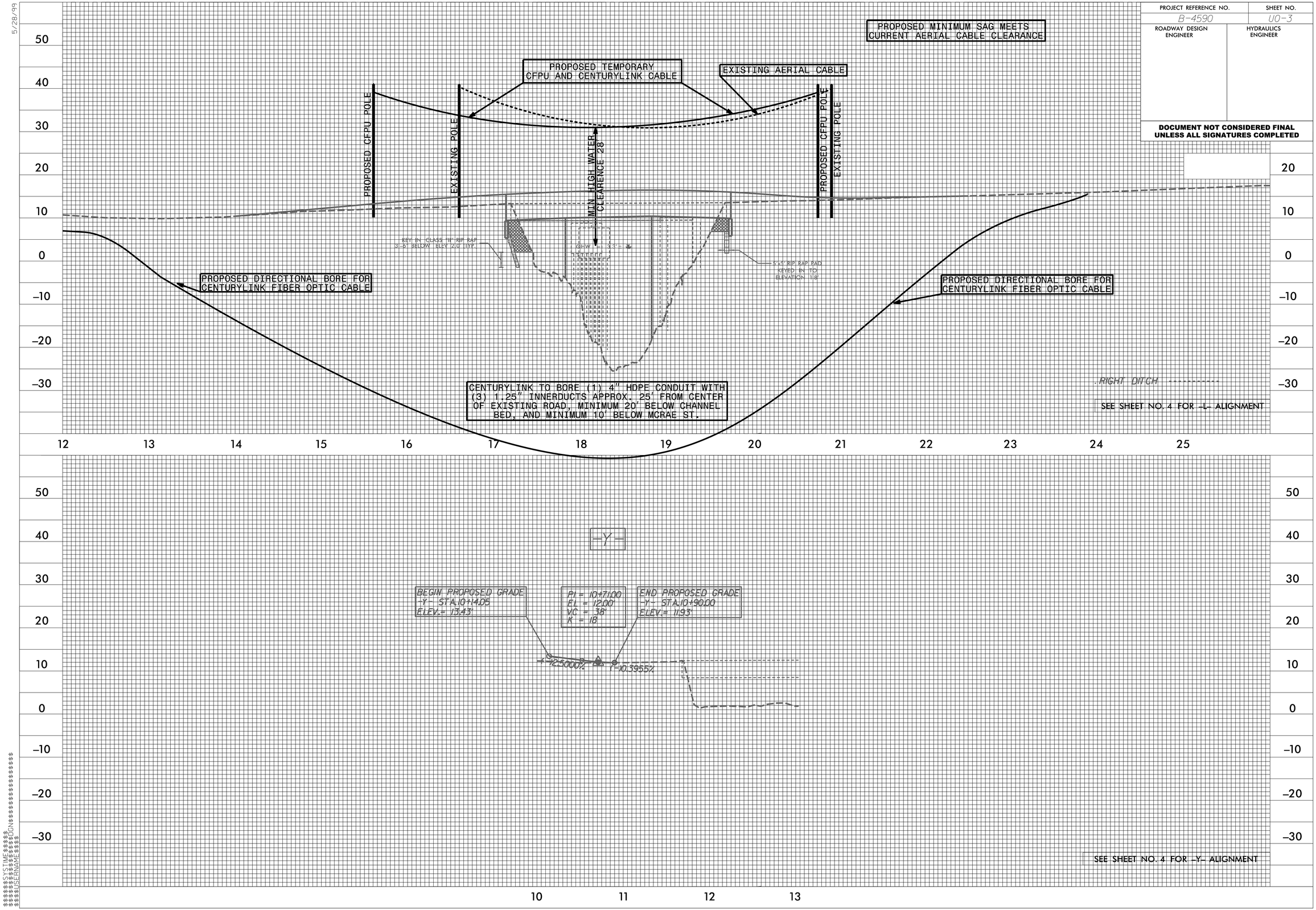

DocuSign Envelope ID: 067A235F-0381-4EA9-9E6C-859425BCECAB

STATE OF NORTH CAROLINA
DIVISION OF HIGHWAYS

CROSS-SECTION SUMMARY

PROJ. REFERENCE NO.	SHEET NO.
B-4590	X-1A

Unclassified excavation, borrow excavation, fine grading, clearing and grubbing and removal of existing pavement will be paid for at the lump sum price for "Grading".

Quantities are approximate only. The Resident Engineer will recross-section the work accurately when the project is staked out. These cross-section notes will be used in computing the final quantities for which the contractor will be paid.

NOTE: EMBANKMENT COLUMN INCLUDES BACKFILL FOR UNDERCUT

Station L	Uncl. Exc. (cu. yd.)	Embt (cu. yd.)
14+00.00	0	0
14+50.00	8	7
15+00.00	10	21
15+50.00	2	16
16+00.00	0	13
16+50.00	0	86
17+00.00	0	240
17+13.00	0	97

Station L	Uncl. Exc. (cu. yd.)	Embt (cu. yd.)
19+76.00	0	0
20+00.00	8	54
20+50.00	22	80
21+00.00	61	39
21+50.00	86	14
22+00.00	75	27
22+50.00	44	14

Station Y	Uncl. Exc. (cu. yd.)	Embt (cu. yd.)
10+14.05	0	0
10+50.00	30	14
10+90.00	42	23

INDEX OF SHEETS

-L-	X-1 THRU X-8
-Y-	X-9

DocuSign Envelope ID: 067A235F-0381-4EA9-9E6C-859425BCECAB

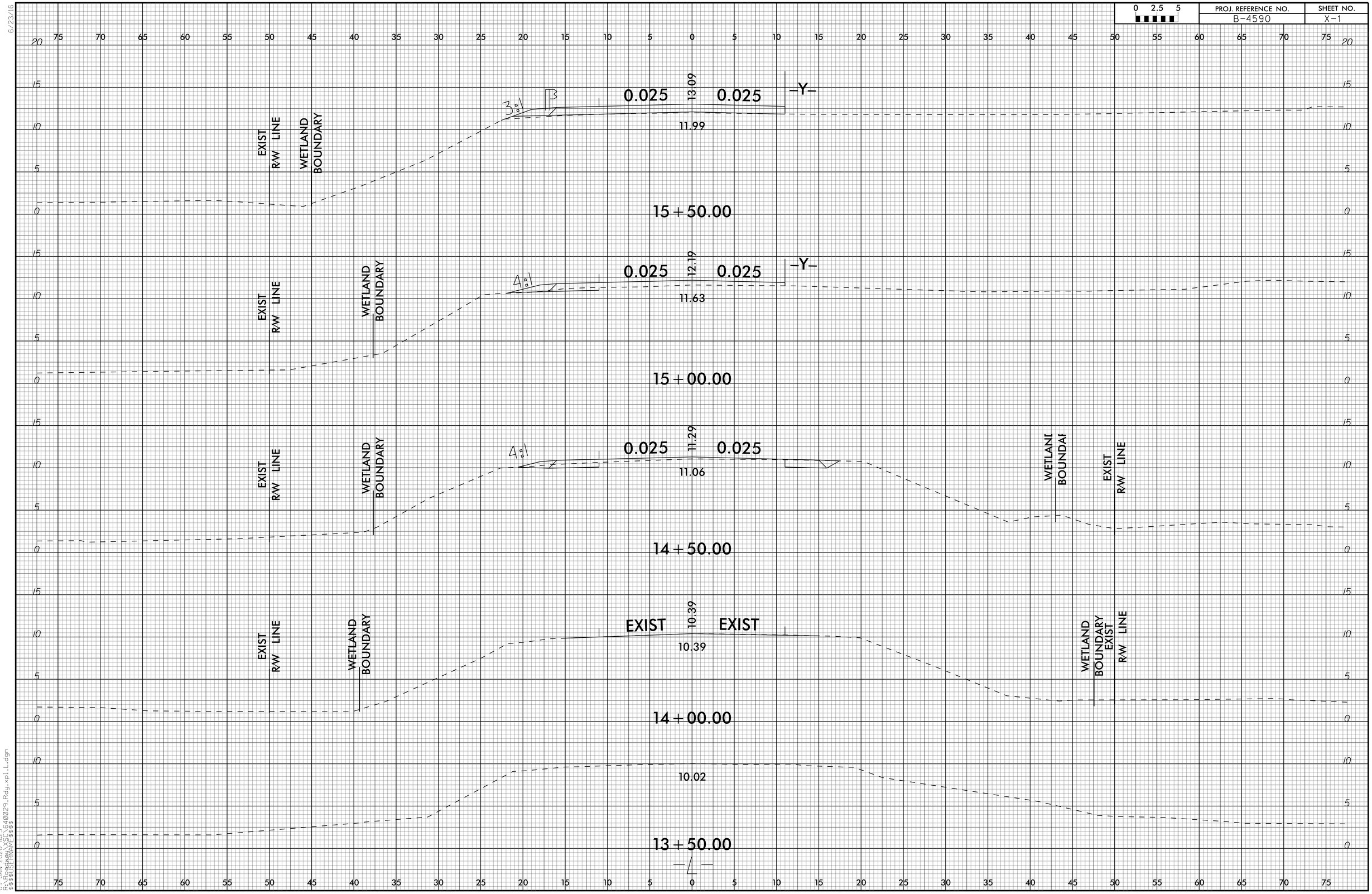

6/23/16
09-JAN-2020 11:25
R:\Roadway\XSC\640029_Rdy_xpl_L.dgn
$$$$USERNAME$$$$

DocuSign Envelope ID: 067A235F-0381-4EA9-9E6C-859425BCECAB

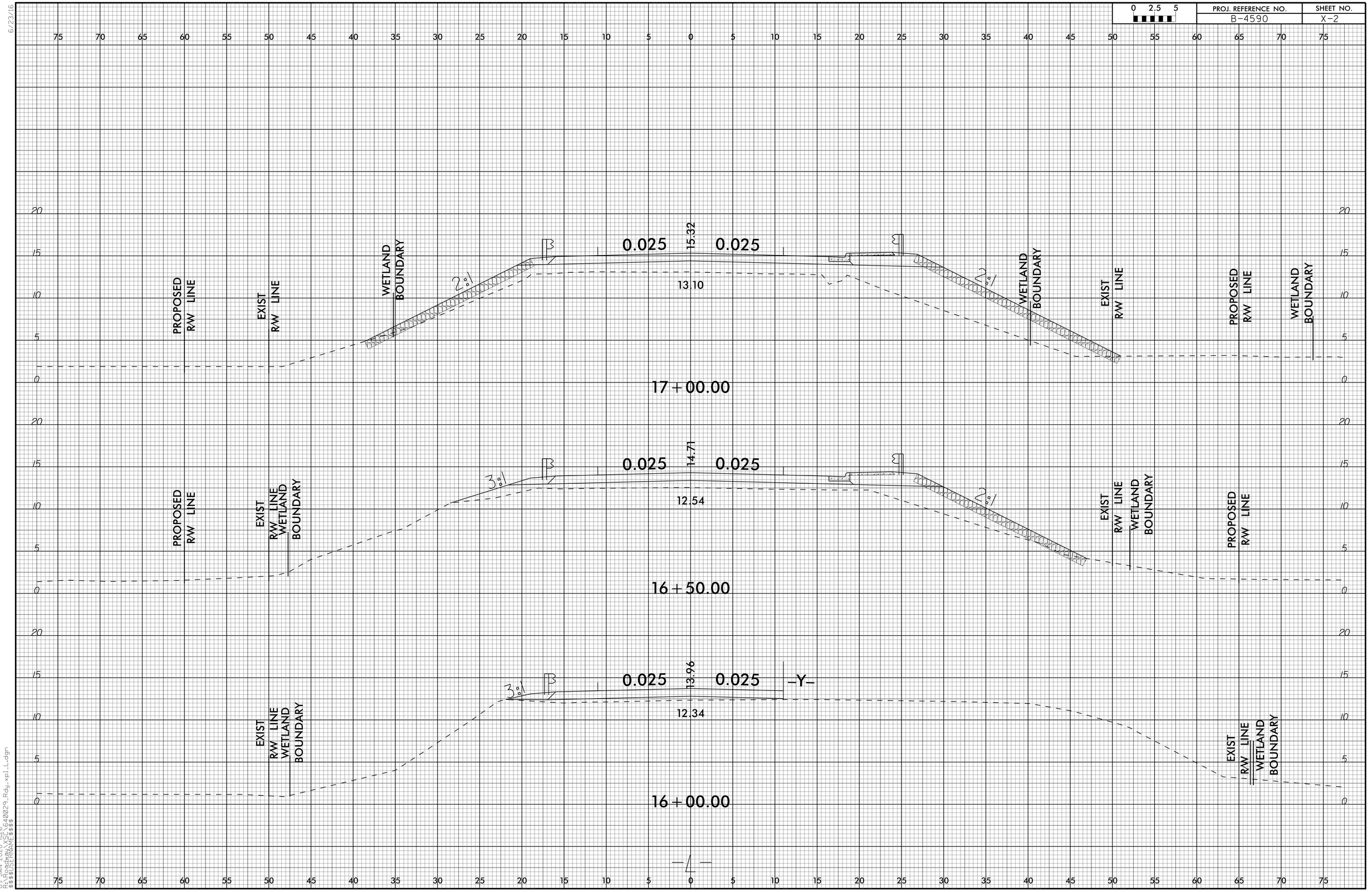

6/23/16
09-JAN-2020 11:26
R:\Roadway\XSC\640029_Rdy_xpl_L.dgn
$$$$USERNAME$$$$

DocuSign Envelope ID: 067A235F-0381-4EA9-9E6C-859425BCECAB

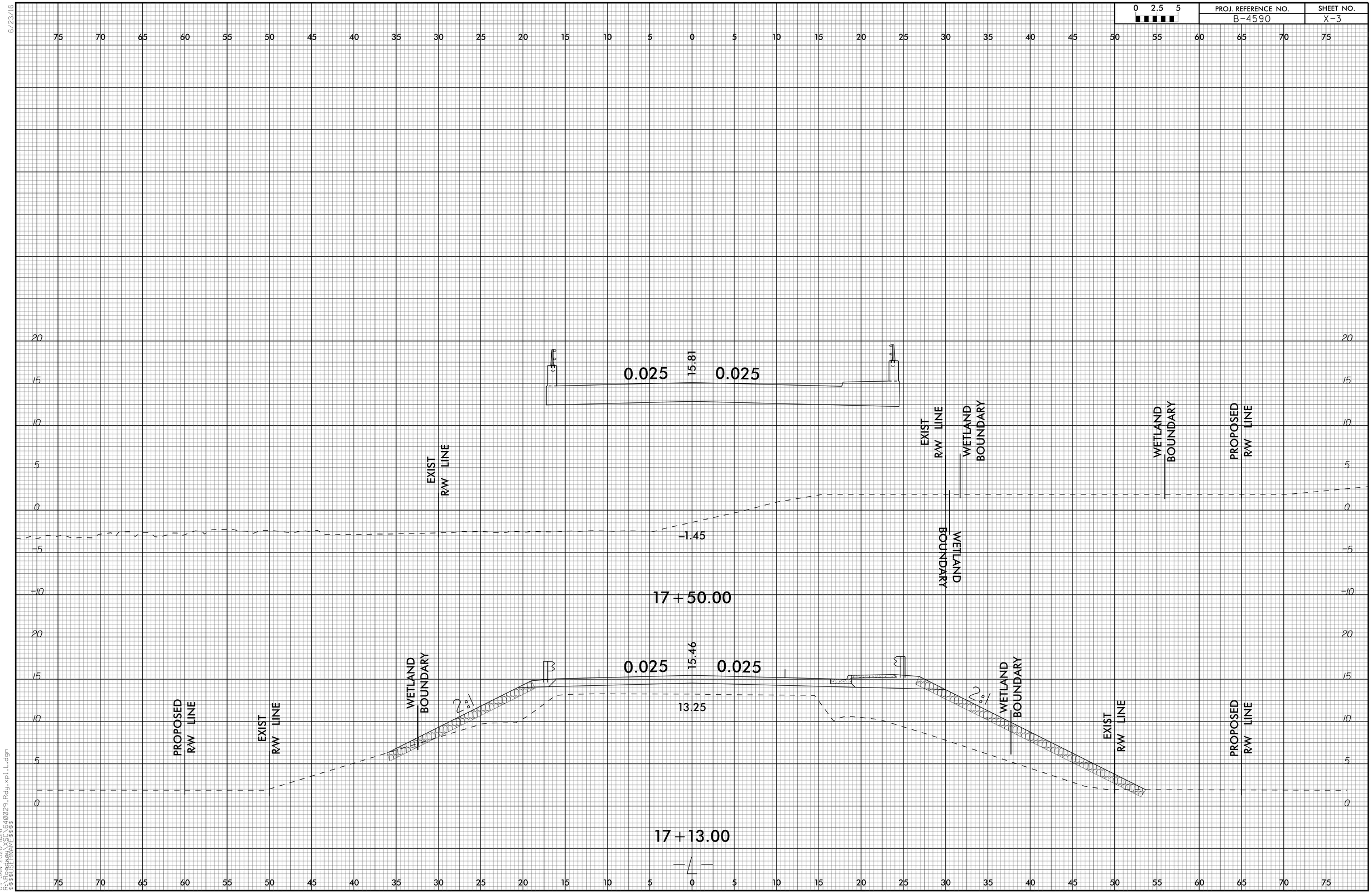

6/23/16
09-JAN-2020 11:26
R:\Roadway\XSC\640029_Rdy_xpl_L.dgn
$$$$USERNAME$$$$

DocuSign Envelope ID: 067A235F-0381-4EA9-9E6C-859425BCECAB

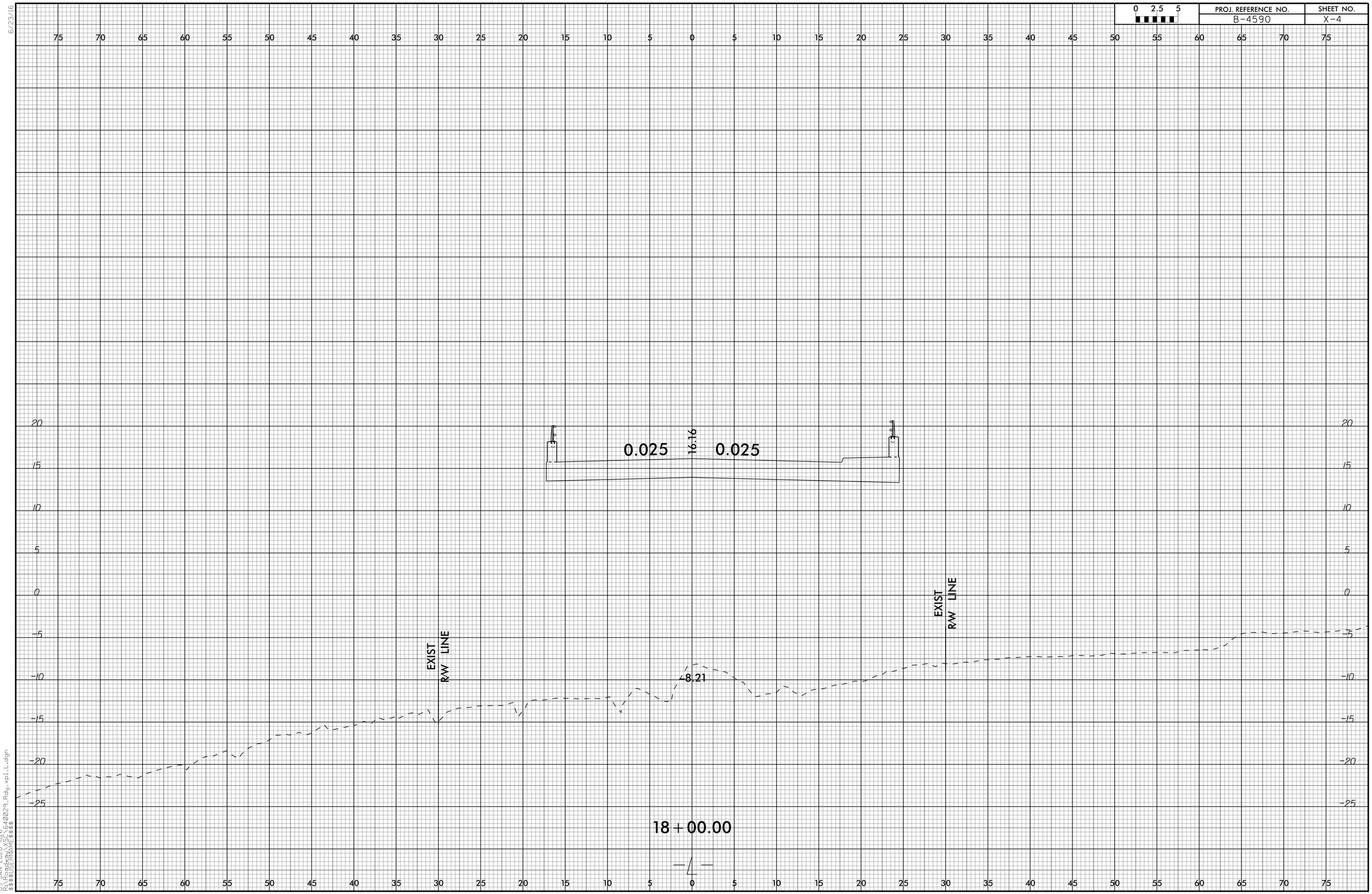

6/23/16
09-JAN-2020 11:26
R:\Roadway\XSC\640029_Rdy_xpl_L.dgn
$$$$USERNAME$$$$

DocuSign Envelope ID: 067A235F-0381-4EA9-9E6C-859425BCECAB

6/23/16

0 2.5 5	PROJ. REFERENCE NO.	SHEET NO.
	B-4590	X-5

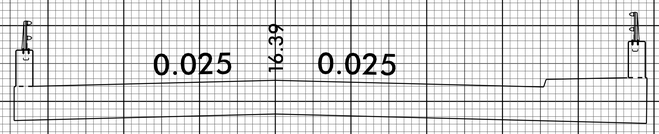

EXIST R/W LINE

EXIST R/W LINE

-24.57

18+50.00

09-JAN-2020 11:27
R:\Roadway\XC\164029_Rdy_xpl_L.dgn
$$$$USERNAME$$$$

DocuSign Envelope ID: 067A235F-0381-4EA9-9E6C-859425BCECAB

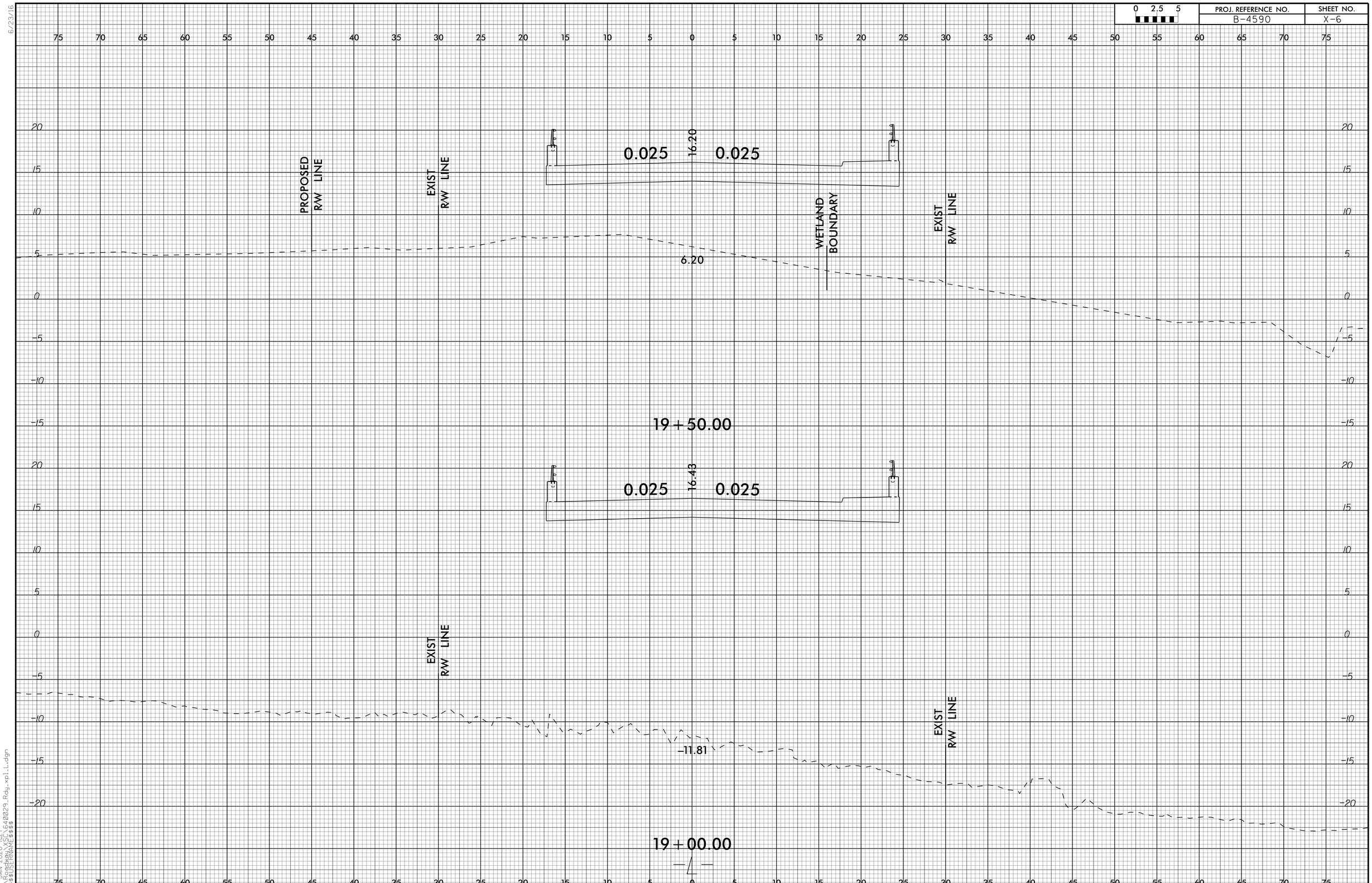

6/23/16
09-JAN-2020 11:27
R:\Roadway\XSC\640029_Rdy_xpl_L.dgn
$$$$USERNAME$$$$

DocuSign Envelope ID: 067A235F-0381-4EA9-9E6C-859425BCECAB

0 2.5 5

PROJ. REFERENCE NO.	SHEET NO.
B-4590	X-7

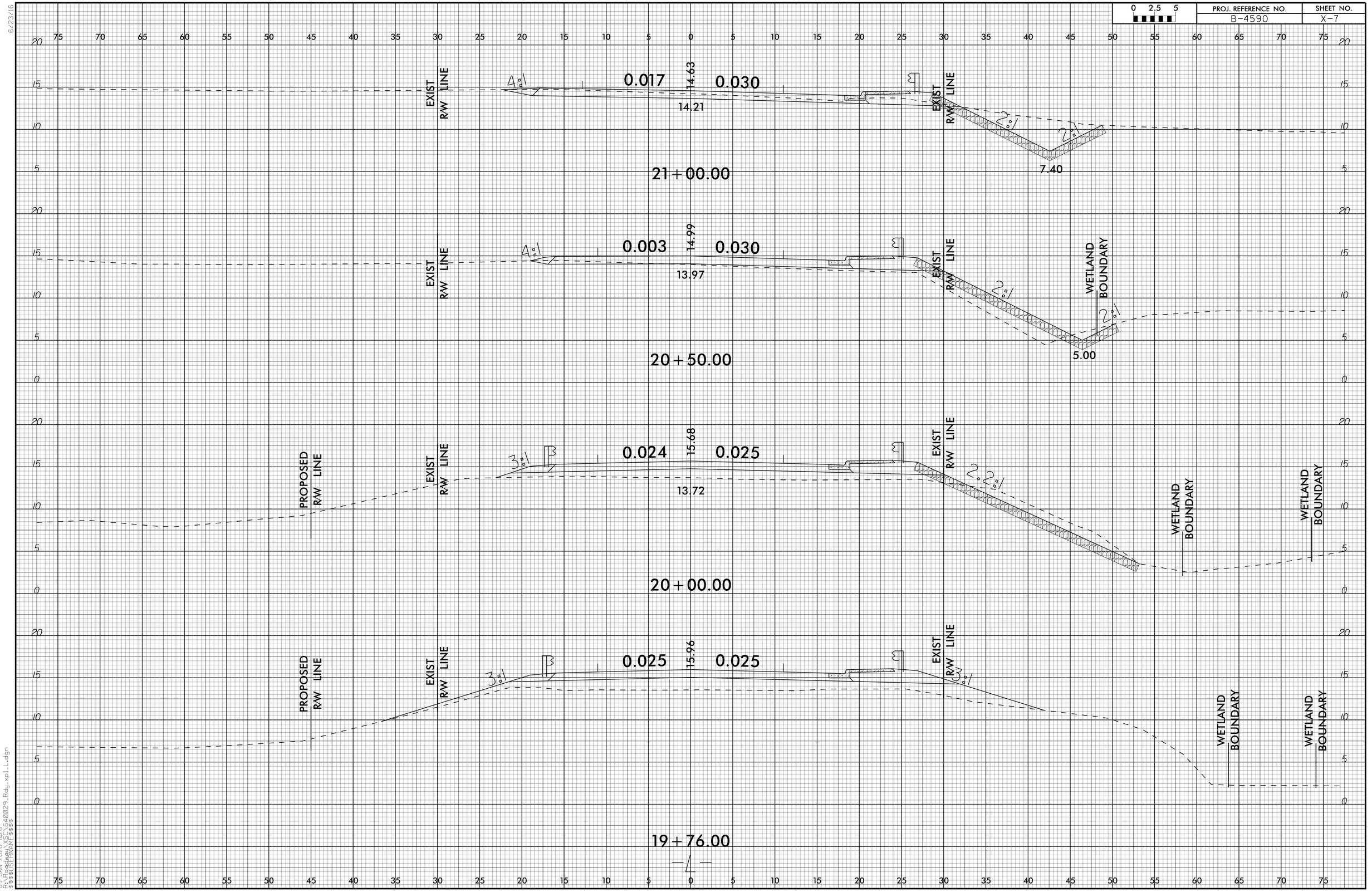

09-JAN-2020 11:28
R:\R-Projects\R-2640029_Rdy.xpl.L.dgn
$$$$USERNAME$$$$

DocuSign Envelope ID: 067A235F-0381-4EA9-9E6C-859425BCECAB

PROJ. REFERENCE NO.	SHEET NO.
B-4590	X-8

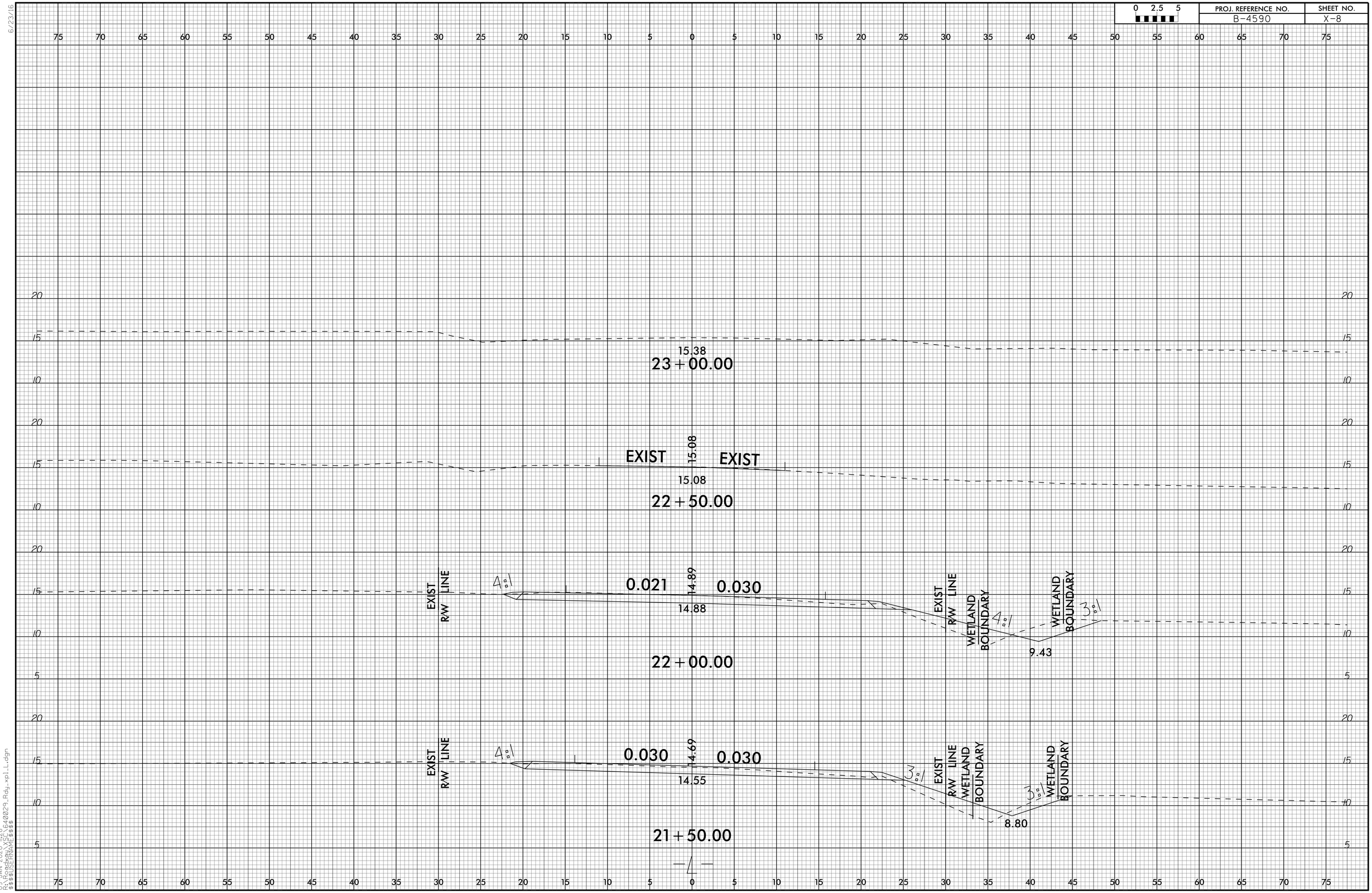

09-JAN-2020 11:28
R:\Roadway\XSC\640029_Rdy_xpl_L.dgn
$$$$USERNAME$$$$

DocuSign Envelope ID: 067A235F-0381-4EA9-9E6C-859425BCECAB

6/23/16

0 2.5 5	PROJ. REFERENCE NO.	SHEET NO.
	B-4590	X-9

PROPOSED R/W LINE
EXIST R/W LINE
WETLAND BOUNDARY
2:1
EXIST
11.93
11.93
EXIST
10+90.00

PROPOSED R/W LINE
EXIST R/W LINE
WETLAND BOUNDARY
2:1
0.025
12.53
11.90
–L–
10+50.00

WETLAND BOUNDARY
EXIST R/W LINE
2.5:1
0.025
13.43
–L–
12.21
10+14.05
–Y–

09-JAN-2020 11:28
R:\R2640029_Rdy.xpl.y.dgn
$$$$USERNAME$$$$

DocuSign Envelope ID: 067A235F-0381-4EA9-9E6C-859425BCECAB

F.A. PROJECT NO.: BRNHS-117(5)

16+50 17+00 17+50 18+00 18+50 19+00 19+50 20+00

+1.8007% +0.3000%

PI = 17+10.00
EL. = 15.97
VC = 290'

SPAN A SPAN B SPAN C

+0.3000% -1.5724%

PI = 19+40.00
EL. = 16.66
VC = 170'

GRADE DATA -L-

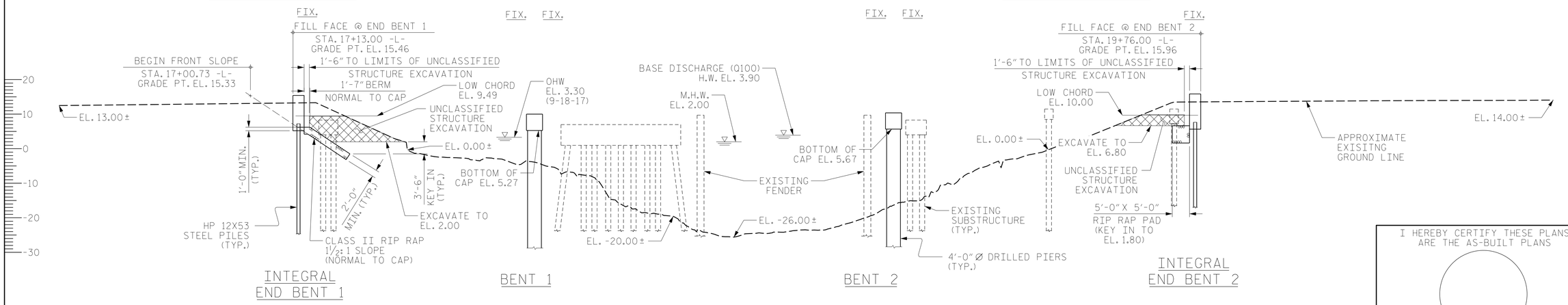

SECTION ALONG -L-

I HEREBY CERTIFY THESE PLANS ARE THE AS-BUILT PLANS

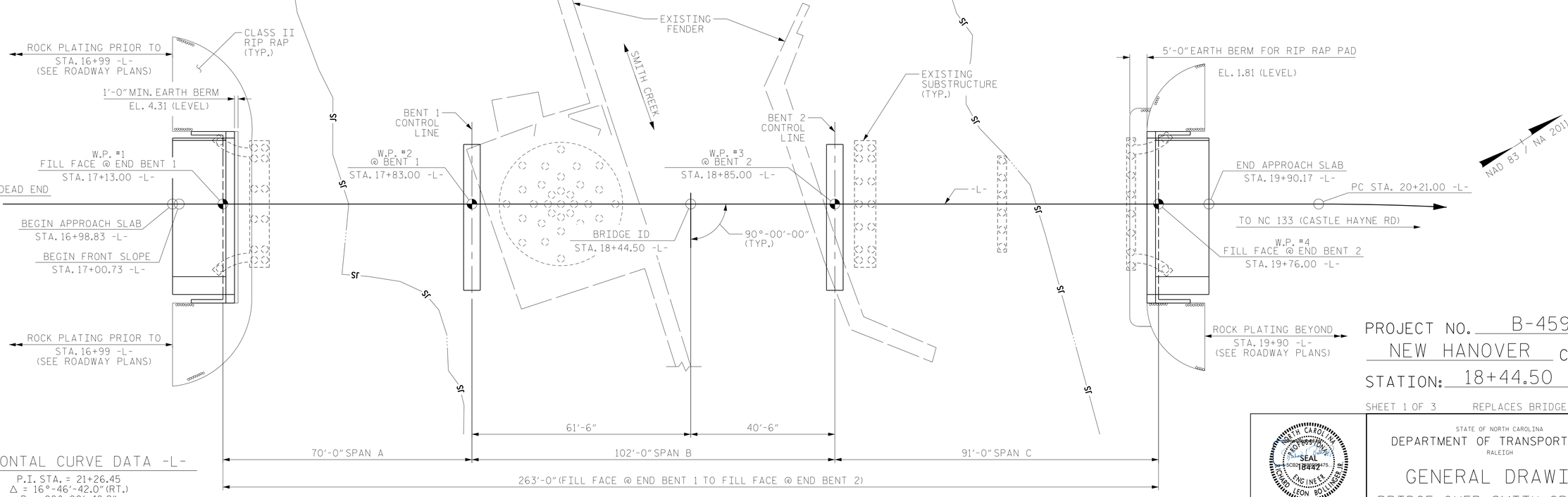

HORIZONTAL CURVE DATA -L-

P.I. STA. = 21+26.45
Δ = 16°-46'-42.0" (RT.)
D = 08°-00'-48.2"
L = 209.38'
T = 105.44'
R = 715.00'

PLAN ALONG -L-

PILES AND DRILLED SHAFTS
NOT SHOWN FOR CLARITY

PROJECT NO. B-4590
NEW HANOVER COUNTY
STATION: 18+44.50 -L-

SHEET 1 OF 3 REPLACES BRIDGE NO. 640029

NORTH CAROLINA PROFESSIONAL ENGINEER SEAL 18442 RICHARD LEON BOLLINGER
6/6/2021

RS&H

RS&H Architects-Engineers-Planners, Inc.
8521 Six Forks Road, Suite 400
Raleigh, NC 27615
919-926-4100 FAX 919-846-9080
www.rsandh.com
North Carolina License Nos. 50073 ° F-0493 ° C-28

STATE OF NORTH CAROLINA
DEPARTMENT OF TRANSPORTATION
RALEIGH

GENERAL DRAWING

BRIDGE OVER SMITH CREEK ON SR 2812 (CASTLE HAYNE RD) BETWEEN DEAD END AND NC 133 (CASTLE HAYNE RD)

REVISIONS						SHEET NO.
NO.	BY:	DATE:	NO.	BY:	DATE:	S-1
1			3			TOTAL SHEETS
2			4			42

DRAWN BY : TWL DATE : 06/2018
CHECKED BY : MRA DATE : 07/2018
DESIGN ENGINEER OF RECORD: RLB DATE : 06/2021

DOCUMENT NOT CONSIDERED FINAL UNLESS ALL SIGNATURES COMPLETED

6/4/2021
X:\P\1030036006 Div 3 B-4590\Design\Structures\Working DGN\FinalPlans\401_001_B4590_SMU_GD1_S-1_640029.dgn
CuanyN

DocuSign Envelope ID: 067A235F-0381-4EA9-9E6C-859425BCECAB

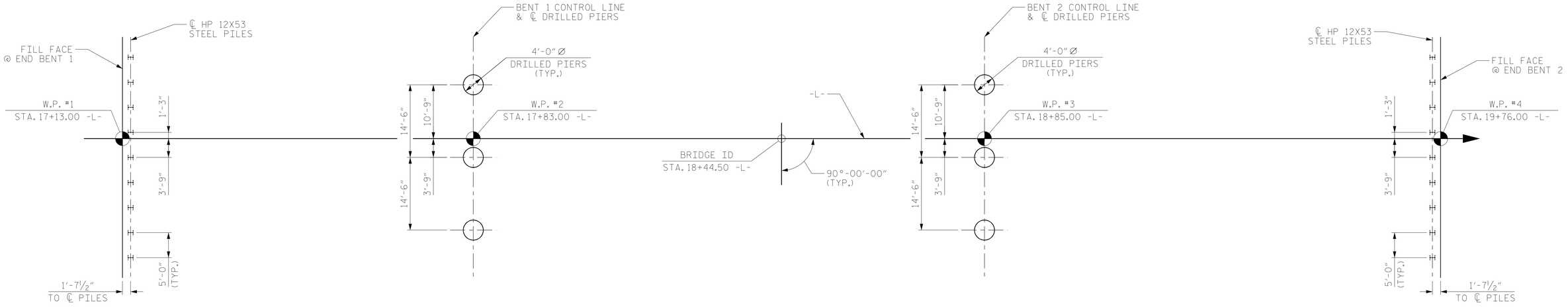

INTEGRAL END BENT 1 | BENT 1 | BENT 2 | INTEGRAL END BENT 2

FOUNDATION LAYOUT

DIMENSIONS LOCATING PILES AND DRILLED PIERS ARE SHOWN TO THE PILE AND DRILLED PIER CENTERLINES

FOUNDATION NOTES

FOR PILES, SEE SECTION 450 OF THE STANDARD SPECIFICATIONS.

STEEL H-PILE POINTS ARE REQUIRED FOR STEEL H-PILES AT END BENT NO. 1 AND END BENT NO. 2. FOR STEEL PILE POINTS, SEE SECTION 450 OF THE STANDARD SPECIFICATIONS.

PILES AT END BENT NO. 1 ARE DESIGNED FOR A FACTORED RESISTANCE OF 100 TONS PER PILE.

DRIVE PILES AT END BENT NO. 1 TO A REQUIRED DRIVING RESISTANCE OF 170 TONS PER PILE.

PREDRILLING FOR PILES (P1 AND P2) IS REQUIRED AT END BENT NO. 1. PREDRILL PILE LOCATIONS AT P1 AND P2 TO AN ELEVATION NO LOWER THAN -45 FT WITH EQUIPMENT THAT WILL RESULT IN A MINIMUM PREDRILLING DIAMETER OF 18 INCHES AND A MAXIMUM PREDRILLING DIAMETER OF 20 INCHES. FOR PREDRILLING FOR PILES, SEE SECTION 450 OF THE STANDARD SPECIFICATIONS.

FOR DRILLED PIERS, SEE SECTION 411 OF THE STANDARD SPECIFICATIONS.

DRILLED PIERS AT BENT NO. 1 ARE DESIGNED FOR A FACTORED RESISTANCE OF 515 TONS PER PIER. CHECK FIELD CONDITIONS FOR THE REQUIRED TIP RESISTANCE OF 50 TSF.

PERMANENT STEEL CASINGS ARE REQUIRED FOR DRILLED PIERS AT BENT NO. 1. DO NOT EXTEND PERMANENT CASINGS BELOW ELEVATION -30 FT (LT) AND -38 FT (C/RT) WITHOUT PRIOR APPROVAL FROM THE ENGINEER.

INSTALL DRILLED PIERS AT BENT NO. 1 TO A TIP ELEVATION NO HIGHER THAN -61 FT (LT/C) AND -56 FT (RT) WITH THE REQUIRED TIP RESISTANCE.

THE SCOUR CRITICAL ELEVATION FOR BENT NO. 1 IS ELEVATION -32 FT (LT) AND -39 FT (RT). SCOUR CRITICAL ELEVATIONS ARE USED TO MONITOR POSSIBLE SCOUR PROBLEMS DURING THE LIFE OF THE STRUCTURE.

DRILLED PIERS AT BENT NO. 2 ARE DESIGNED FOR A FACTORED RESISTANCE OF 515 TONS PER PIER. CHECK FIELD CONDITIONS FOR THE REQUIRED TIP RESISTANCE OF 50 TSF.

PERMANENT STEEL CASINGS ARE REQUIRED FOR DRILLED PIERS AT BENT NO. 2. DO NOT EXTEND PERMANENT CASINGS BELOW ELEVATION -28 FT (LT) AND -29 FT (C/RT) WITHOUT PRIOR APPROVAL FROM THE ENGINEER.

INSTALL DRILLED PIERS AT BENT NO. 2 TO A TIP ELEVATION NO HIGHER THAN -61 FT (LT/C) AND -57 FT (RT) WITH THE REQUIRED TIP RESISTANCE.

THE SCOUR CRITICAL ELEVATION FOR BENT NO. 2 IS ELEVATION -29 FT (LT) AND -30 FT (RT). SCOUR CRITICAL ELEVATIONS ARE USED TO MONITOR POSSIBLE SCOUR PROBLEMS DURING THE LIFE OF THE STRUCTURE.

PILES AT END BENT NO. 2 ARE DESIGNED FOR A FACTORED RESISTANCE OF 100 TONS PER PILE.

DRIVE PILES AT END BENT NO. 2 TO A REQUIRED DRIVING RESISTANCE OF 170 TONS PER PILE.

PREDRILLING FOR PILES (P1 AND P2) IS REQUIRED AT END BENT NO. 2. PREDRILL PILE LOCATIONS AT P1 AND P2 TO AN ELEVATION NO LOWER THAN -32 FT WITH EQUIPMENT THAT WILL RESULT IN A MINIMUM PREDRILLING DIAMETER OF 18 INCHES AND A MAXIMUM PREDRILLING DIAMETER OF 20 INCHES. FOR PREDRILLING FOR PILES, SEE SECTION 450 OF THE STANDARD SPECIFICATIONS.

TESTING PILES WITH THE PDA DURING DRIVING, RESTRIKING OR REDRIVING MAY BE REQUIRED AT END BENT NO. 1 OR END BENT NO. 2. THE ENGINEER WILL DETERMINE THE NEED FOR PDA TESTING. FOR PDA TESTING, SEE SECTION 450 OF THE STANDARD SPECIFICATIONS.

DO NOT DEWATER DRILLED PIER EXCAVATIONS AT BENT NO. 1 AND BENT NO. 2. CLEAN THE BOTTOM OF EXCAVATIONS WITH A SUBMERSIBLE PUMP OR AN AIRLIFT. WET PLACEMENT OF CONCRETE IS REQUIRED.

SLURRY CONSTRUCTION IS REQUIRED FOR DRILLED PIERS AT BENT NO. 1 AND BENT NO. 2.

SID INSPECTIONS ARE REQUIRED FOR DRILLED PIERS AT BENT NO. 1 AND BENT NO. 2. FOR SID INSPECTIONS, SEE SECTION 411 OF THE STANDARD SPECIFICATIONS.

CSL TUBES ARE REQUIRED AND CSL TESTING MAY BE REQUIRED FOR DRILLED PIERS. THE ENGINEER WILL DETERMINE THE NEED FOR CSL TESTING. FOR CSL TESTING, SEE SECTION 411 OF THE STANDARD SPECIFICATIONS.

PROJECT NO. B-4590
NEW HANOVER COUNTY
STATION: 18+44.50 -L-

SHEET 2 OF 3

NORTH CAROLINA PROFESSIONAL ENGINEER SEAL 18442 RICHARD LEON BOLLINGER JR. ENGINEER
6/6/2021

RS&H

RS&H Architects-Engineers-Planners, Inc.
8521 Six Forks Road, Suite 400
Raleigh, NC 27615
919-926-4100 FAX 919-846-9080
www.rsandh.com
North Carolina License Nos. 50073 * F-0493 * C-28

STATE OF NORTH CAROLINA
DEPARTMENT OF TRANSPORTATION
RALEIGH

GENERAL DRAWING

BRIDGE OVER SMITH CREEK ON SR 2812 (CASTLE HAYNE RD) BETWEEN DEAD END AND NC 133 (CASTLE HAYNE RD)

REVISIONS						SHEET NO.
NO.	BY:	DATE:	NO.	BY:	DATE:	S-2
1			3			TOTAL SHEETS
2			4			42

DOCUMENT NOT CONSIDERED FINAL UNLESS ALL SIGNATURES COMPLETED

DRAWN BY : TWL DATE : 06/2018
CHECKED BY : MAL DATE : 08/2018
DESIGN ENGINEER OF RECORD: RLB DATE : 06/2021

6/4/2021
X:\P\1030036006 Div 3 B-4590\Design\Structures\Working DGN\FinalPlans\401_003_B4590_SMU_GD2_S-2_640029.dgn
CuanyN

DocuSign Envelope ID: 067A235F-0381-4EA9-9E6C-859425BCECAB

BENCHMARK: BM#2 RR SPIKE IN 30" SYCAMORE, -L- STA. 20+25, 89.0' RIGHT. ELEV. = 10.69

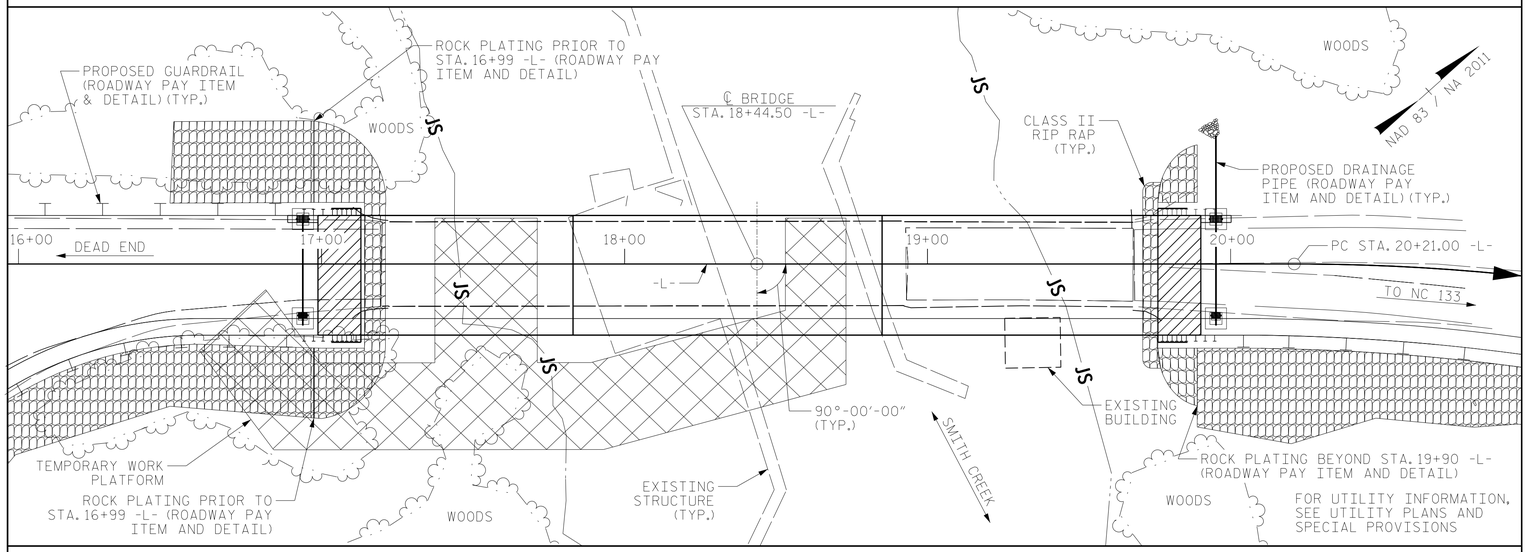

LOCATION SKETCH

NOTES

ASSUMED LIVE LOAD = HL-93 OR ALTERNATE LOADING.

THIS BRIDGE HAS BEEN DESIGNED IN ACCORDANCE WITH THE AASHTO LRFD BRIDGE DESIGN SPECIFICATIONS.

THIS BRIDGE IS LOCATED IN SEISMIC ZONE 1.

THIS STRUCTURE CONTAINS THE NECESSARY CORROSION PROTECTION REQUIRED FOR A CORROSIVE SITE.

ALL METALLIZED SURFACES SHALL RECEIVE A SEAL COATING AS SPECIFIED IN THE SPECIAL PROVISION FOR THERMAL SPRAYED COATINGS (METALLIZATION).

CLASS AA CONCRETE SHALL BE USED IN ALL CAST-IN-PLACE BENT CAPS, AND SHALL CONTAIN CALCIUM NITRITE CORROSION INHIBITOR. FOR CALCIUM NITRITE CORROSION INHIBITOR, SEE STANDARD SPECIFICATIONS.

ALL BAR SUPPORTS USED IN THE PARAPET, SIDEWALK, DECK, BENT CAPS, END BENT CAPS, AND ALL INCIDENTAL REINFORCING STEEL SHALL BE EPOXY COATED IN ACCORDANCE WITH THE STANDARD SPECIFICATIONS.

THE CONCRETE IN ALL DRILLED PIERS, BENT CAPS, AND END BENT CAPS SHALL CONTAIN SILICA FUME. SILICA FUME SHALL BE SUBSTITUTED FOR 5% OF THE PORTLAND CEMENT BY WEIGHT. IF THE OPTION OF ARTICLE 1024-1 OF THE STANDARD SPECIFICATIONS TO PARTIALLY SUBSTITUTE CLASS F FLY ASH FOR PORTLAND CEMENT IS EXERCISED, THEN THE RATE OF FLY ASH SUBSTITUTION SHALL BE REDUCED TO 1.0 LB OF FLY ASH PER 1.0 OF CEMENT. NO PAYMENT WILL BE MADE FOR THIS SUBSTITUTION AS IT IS CONSIDERED INCIDENTAL TO THE VARIOUS PAY ITEMS.

METALLIZE PILES IN ACCORDANCE WITH TABLE 2 OF THE DEPARTMENT THERMAL SPRAYED COATINGS (METALLIZATION) PROGRAM. FOR THERMAL SPRAYED COATINGS, SEE SPECIAL PROVISIONS.

AFTER DRIVING THE PILES, APPLY 1 COAT EACH OF 1080-09 BROWN AND 1080-09 GRAY PAINT TO THE EMBEDDED SECTION OF THE METALLIZED PILE PRIOR TO CONCRETE EMBEDMENT IN ACCORDANCE WITH SECTION 442 OF THE STANDARD SPECIFICATIONS.

ALL PAVEMENT MARKING WILL BE IN ACCORDANCE WITH THE PAVEMENT MARKING PLANS AND SHALL PROVIDE FOR BICYCLES.

NEEDLE BEAMS WILL NOT BE ALLOWED UNLESS OTHERWISE CALLED FOR ON THE PLANS OR APPROVED BY THE ENGINEER.

INASMUCH AS THE PAINT SYSTEM ON THE EXISTING STRUCTURAL STEEL CONTAINS LEAD, THE CONTRACTOR'S ATTENTION IS DIRECTED TO ARTICLE 107-1 OF THE STANDARD SPECIFICATIONS. ANY COSTS RESULTING FROM COMPLIANCE WITH APPLICABLE STATE OR FEDERAL REGULATIONS PERTAINING TO HANDLING OF MATERIALS CONTAINING LEAD BASED PAINT SHALL BE INCLUDED IN THE BID PRICE FOR "REMOVAL OF EXISTING STRUCTURE AT 18+44.50 -L-".

THE MATERIAL SHOWN IN THE CROSS-HATCHED AREA OF SHEET S-1 SHALL BE EXCAVATED FOR A DISTANCE OF 51 FT TO THE LEFT AND 56 FT TO THE RIGHT OF CENTERLINE ROADWAY AS DIRECTED BY THE ENGINEER. THIS WORK WILL BE PAID FOR AT THE CONTRACT LUMP SUM PRICE FOR UNCLASSIFIED STRUCTURE EXCAVATION. SEE SECTION 412 OF THE STANDARD SPECIFICATIONS.

THE SUBSTRUCTURE OF THE EXISTING BRIDGE INDICATED ON THE PLANS IS FROM THE BEST INFORMATION AVAILABLE. THIS INFORMATION IS SHOWN FOR THE CONVENIENCE OF THE CONTRACTOR. THE CONTRACTOR SHALL HAVE NO CLAIM WHATSOEVER AGAINST THE DEPARTMENT OF TRANSPORTATION FOR ANY DELAYS OR ADDITIONAL COST INCURRED BASED ON DIFFERENCES BETWEEN THE EXISTING BRIDGE SUBSTRUCTURE SHOWN ON THE PLANS AND THE ACTUAL CONDITIONS AT THE PROJECT SITE.

REMOVAL OF THE EXISTING BRIDGE SHALL BE PERFORMED IN A MANNER THAT PREVENTS DEBRIS FROM FALLING INTO THE WATER. THE CONTRACTOR SHALL SUBMIT DEMOLITION PLANS FOR REVIEW AND REMOVE THE BRIDGE IN ACCORDANCE WITH ARTICLE 402-2 OF THE STANDARD SPECIFICATIONS.

ALL PILES FROM THE EXISTING BRIDGE STRUCTURE AND ANY REMNANT PILES FROM PREVIOUS STRUCTURES SHALL BE REMOVED IN THEIR ENTIRETY. IF PILES BREAK OFF DURING REMOVAL OR OTHERWISE CANNOT BE ENTIRELY REMOVED AND THEY DO NOT INTERFERE WITH THE PLACEMENT OF NEW PILES, THEY MAY BE CUT OFF ONE FOOT BELOW STREAMBED.

THE CONTRACTOR SHALL PROVIDE INDEPENDENT ASSURANCE SAMPLES OF REINFORCING STEEL AS FOLLOWS: FOR PROJECTS REQUIRING UP TO 400 TONS OF REINFORCING STEEL, ONE 30 INCH SAMPLE OF EACH SIZE BAR USED, AND FOR PROJECTS REQUIRING OVER 400 TONS OF REINFORCING STEEL, TWO 30 INCH SAMPLES OF EACH SIZE BAR USED. THE SAMPLE BARS SHOULD COME FROM STEEL ACTUALLY USED IN THE PROJECT AND THE SAMPLE BARS SHOULD BE REPLACED BY SPLICED BARS AS SPECIFIED IN THE SAMPLE BAR REPLACEMENT CHART. PAYMENT FOR SAMPLE BARS AND REPLACEMENT REINFORCING STEEL SHALL BE CONSIDERED INCIDENTAL TO VARIOUS PAY ITEMS.

FOR SUBMITTAL OF WORKING DRAWINGS, SEE SPECIAL PROVISIONS.

FOR FALSEWORK AND FORMWORK, SEE SPECIAL PROVISIONS.

FOR CRANE SAFETY, SEE SPECIAL PROVISIONS.

FOR GROUT FOR STRUCTURES, SEE SPECIAL PROVISIONS.

FOR ASBESTOS ASSESSMENT FOR BRIDGE DEMOLITION AND RENOVATION ACTIVITIES, SEE SPECIAL PROVISIONS.

THIS STRUCTURE HAS BEEN DESIGNED IN ACCORDANCE WITH "HEC 18 - EVALUATING SCOUR AT BRIDGES".

FOR EROSION CONTROL MEASURES, SEE EROSION CONTROL PLANS.

THE CONTRACTOR WILL BE REQUIRED TO CONSTRUCT, MAINTAIN, AND AFTERWARDS REMOVE THE TEMPORARY ACCESS AT STATION 18+44.50 -L- FOR USE DURING CONSTRUCTION OF THE PROPOSED STRUCTURE.

FOR CONSTRUCTION, MAINTENANCE, AND REMOVAL OF TEMPORARY ACCESS, SEE SPECIAL PROVISIONS.

FOR OTHER DESIGN DATA AND GENERAL NOTES, SEE SHEET SN.

TOTAL BILL OF MATERIALS

	CONSTRUCTION, MAINTENANCE, AND REMOVAL OF TEMPORARY ACCESS @ STA. 18+44.50 -L-	REMOVAL OF EXISTING STRUCTURE @ STA. 18+44.50 -L-	ASBESTOS ASSESSMENT	4'-0" DIA. DRILLED PIERS IN SOIL	4'-0" DIA. DRILLED PIERS NOT IN SOIL	PERMANENT STEEL CASING FOR 4'-0" DIA. DRILLED PIER	PDA TESTING	SID INSPECTIONS	CSL TESTING	UNCLASSIFIED STRUCTURE EXCAVATION @ STA. 18+44.50 -L-
	LUMP SUM	LUMP SUM	LUMP SUM	LIN. FT.	LIN. FT.	LIN. FT.	EACH	EACH	EACH	LUMP SUM
SUPERSTRUCTURE										
END BENT 1										
BENT 1				193.8		121.8		1	1	
BENT 2				196.0		103.0		1	1	
END BENT 2										
TOTAL	LUMP SUM	LUMP SUM	LUMP SUM	389.8	0	224.8	1	2	2	LUMP SUM

	REINFORCED CONCRETE DECK SLAB	GROOVING BRIDGE FLOORS	CLASS AA CONCRETE	BRIDGE APPROACH SLABS	EPOXY COATED REINFORCING STEEL	EPOXY COATED SPIRAL COLUMN REINFORCING STEEL	54" PRESTRESSED CONCRETE GIRDERS		PILE DRIVING EQUIPMENT SETUP FOR HP 12X53 STEEL PILES	HP 12x53 STEEL PILES		STEEL PILE POINTS	PREDRILLING FOR PILES	PILE REDRIVES
	SQ. FT.	SQ. FT.	CU. YDS.	LUMP SUM	LBS.	LBS.	NO.	LIN. FT.	EACH	NO.	LIN. FT.	EACH	LIN. FT.	EACH
SUPERSTRUCTURE	10998	9001					15	1297.5						
END BENT 1			37.5		7,045				9	9	550	9	101	5
BENT 1			33.6		19,789	5,068								
BENT 2			33.6		19,920	5,124								
END BENT 2			37.5		7,045				9	9	415	9	75	5
TOTAL	10,998	9,001	142.2	LUMP SUM	53,799	10,192	15	1,297.5	18	18	965	18	176	10

	TWO BAR METAL RAIL	1'-2" X 2'-6" CONCRETE PARAPET	RIP RAP CLASS II (2'-0" THICK)	GEOTEXTILE FOR DRAINAGE	ELASTOMERIC BEARINGS
	LIN. FT.	LIN. FT.	TONS	SQ. YDS.	LUMP SUM
SUPERSTRUCTURE	507.7	522.7			
END BENT 1			260	290	
BENT 1					
BENT 2					
END BENT 2			200	205	
TOTAL	507.7	522.7	460	495	LUMP SUM

SAMPLE BAR REPLACEMENT

SIZE	LENGTH
#3	6'-2"
#4	7'-4"
#5	8'-6"
#6	9'-8"
#7	10'-10"
#8	12'-0"
#9	13'-2"
#10	14'-6"
#11	15'-10"

NOTE: SAMPLE BAR REPLACEMENT LENGTHS BASED ON 30" (SAMPLE LENGTH) PLUS TWO SPLICE LENGTHS AND fy = 60 KSI.

HYDRAULIC DATA

DESIGN DISCHARGE	= 4,600 CFS
FREQUENCY OF DESIGN FLOOD	= 25 YRS
DESIGN HIGH WATER ELEVATION	= 2.2*
DRAINAGE AREA	= 31.8 SQ. MI.
BASE DISCHARGE (Q100)	= 6,200 CFS
BASE HIGH WATER ELEVATION	= 3.9*

* ACTUAL ELEVATIONS WILL BE HIGHER THAN WSELS SHOWN DUE TO BACKWATER EFFECTS FROM THE NORTHEAST CAPE FEAR RIVER

OVERTOPPING FLOOD DATA

OVERTOPPING DISCHARGE	= 30,000 CFS
FREQUENCY OF OVERTOPPING FLOOD	= 500+ YRS
Δ OVERTOPPING FLOOD ELEVATION	= 9.8

Δ SAG AT STA. 13+15 -L-

PROJECT NO. B-4590

NEW HANOVER COUNTY

STATION: 18+44.50 -L-

SHEET 3 OF 3

DRAWN BY : NSC DATE : 06/2018

CHECKED BY : JMR DATE : 08/2018

DESIGN ENGINEER OF RECORD: RLB DATE : 06/2021

DOCUMENT NOT CONSIDERED FINAL UNLESS ALL SIGNATURES COMPLETED

NORTH CAROLINA PROFESSIONAL SEAL 18442 ENGINEER RICHARD LEON BOLLINGER JR

6/8/2021

RS&H

RS&H Architects-Engineers-Planners, Inc.
8521 Six Forks Road, Suite 400
Raleigh, NC 27615
919-926-4100 FAX 919-846-9080
www.rsandh.com
North Carolina License Nos. 50073 * F-0493 * C-28

STATE OF NORTH CAROLINA
DEPARTMENT OF TRANSPORTATION
RALEIGH

GENERAL DRAWING

BRIDGE OVER SMITH CREEK ON SR 2812 (CASTLE HAYNE RD) BETWEEN DEAD END AND NC 133 (CASTLE HAYNE RD)

REVISIONS						SHEET NO.
NO.	BY:	DATE:	NO.	BY:	DATE:	S-3
1			3			TOTAL SHEETS
2			4			42

6/7/2021
X:\P\1030036006 Div 3 B-4590\Design\Structures\Working DGN\FinalPlans\401_005_B4590_SMU_GD3_S-3_640029.dgn
CuanyN

DocuSign Envelope ID: 067A235F-0381-4EA9-9E6C-859425BCECAB

LOAD AND RESISTANCE FACTOR RATING (LRFR) SUMMARY FOR PRESTRESSED CONCRETE GIRDERS

LEVEL		VEHICLE	WEIGHT (W) (TONS)	CONTROLLING LOAD RATING (#)	MINIMUM RATING FACTORS (RF)	TONS = W x RF	STRENGTH I LIMIT STATE										SERVICE III LIMIT STATE						COMMENT NUMBER
								MOMENT					SHEAR					MOMENT						
							LIVE-LOAD FACTORS (γ_{LL})	DISTRIBUTION FACTORS (DF)	RATING FACTOR	SPAN	GIRDER LOCATION	DISTANCE FROM LEFT END OF SPAN (ft)	DISTRIBUTION FACTORS (DF)	RATING FACTOR	SPAN	GIRDER LOCATION	DISTANCE FROM LEFT END OF SPAN (ft)	LIVE-LOAD FACTORS (γ_{LL})	DISTRIBUTION FACTORS (DF)	RATING FACTOR	SPAN	GIRDER LOCATION	DISTANCE FROM LEFT END OF SPAN (ft)	
DESIGN LOAD RATING		HL-93 (INVENTORY)	N/A	1	1.08	--	1.75	0.79	1.53	B	E	49.88	0.90	1.42	B	I	19.52	0.80	0.79	1.08	A	I	33.63	1
		HL-93 (OPERATING)	N/A		1.89	--	1.35	0.79	1.98	B	E	49.88	0.90	1.89	B	I	19.52	N/A	--	--	--	--	--	
		HS-20 (INVENTORY)	36.000	2	1.40	50.400	1.75	0.79	2.00	A	E	33.63	0.90	1.91	B	I	19.52	0.80	0.79	1.40	A	I	33.63	
		HS-20 (OPERATING)	36.000		2.52	90.720	1.35	0.79	2.59	A	I	33.63	0.90	2.52	B	I	19.52	N/A	--	--	--	--	--	
LEGAL LOAD RATING	SINGLE VEHICLE (SV)	SNSH	13.500		3.14	42.390	1.40	0.79	5.58	A	I	33.63	0.90	6.56	B	I	19.52	0.80	0.79	3.14	A	I	33.63	
		SNGARBS2	20.000		2.35	47.000	1.40	0.79	4.18	A	I	33.63	0.90	4.58	B	I	19.52	0.80	0.79	2.35	A	I	33.63	
		SNAGRIS2	22.000		2.22	48.840	1.40	0.79	3.95	A	I	33.63	0.90	4.22	B	I	19.52	0.80	0.79	2.22	A	I	33.63	
		SNCOTTS3	27.250		1.55	42.238	1.40	0.79	2.76	A	I	33.63	0.90	3.14	B	I	19.52	0.80	0.79	1.55	A	I	33.63	
		SNAGGRS4	34.925		1.31	45.752	1.40	0.79	2.33	A	E	33.63	0.90	2.43	B	I	19.52	0.80	0.79	1.31	A	I	33.63	
		SNS5A	35.550		1.27	45.149	1.40	0.79	2.27	A	I	33.63	0.90	2.45	B	I	19.52	0.80	0.79	1.27	A	I	33.63	
		SNS6A	39.950		1.18	47.141	1.40	0.79	2.09	A	I	33.63	0.90	2.21	B	I	19.52	0.80	0.79	1.18	A	I	33.63	
		SNS7B	42.000		1.12	47.040	1.40	0.79	1.99	A	E	33.63	0.90	2.09	B	I	19.52	0.80	0.79	1.12	A	I	33.63	
	TRUCK TRACTOR SEMI-TRAILER (TTST)	TNAGRIT3	33.000		1.44	47.520	1.40	0.79	2.56	A	I	33.63	0.90	2.63	B	I	19.52	0.80	0.79	1.44	A	I	33.63	
		TNT4A	33.075		1.44	47.628	1.40	0.79	2.57	A	I	33.63	0.90	2.77	B	I	19.52	0.80	0.79	1.44	A	I	33.63	
		TNT6A	41.600		1.18	49.088	1.40	0.79	2.09	A	I	33.63	0.90	2.22	B	I	19.52	0.80	0.79	1.18	A	I	33.63	
		TNT7A	42.000		1.19	49.980	1.40	0.79	2.11	A	I	33.63	0.90	2.23	B	I	19.52	0.80	0.79	1.19	A	I	33.63	
		TNT7B	42.000		1.22	51.240	1.40	0.79	2.18	A	E	33.63	0.90	2.11	B	I	19.52	0.80	0.79	1.22	A	I	33.63	
		TNAGRIT4	43.000		1.17	50.310	1.40	0.79	2.08	A	E	33.63	0.90	2.08	B	I	19.52	0.80	0.79	1.17	A	I	33.63	
		TNAGT5A	45.000		1.10	49.500	1.40	0.79	1.95	A	I	33.63	0.90	1.98	B	I	19.52	0.80	0.79	1.10	A	I	33.63	
		TNAGT5B	45.000	3	1.08	48.600	1.40	0.79	1.93	A	E	33.63	0.90	1.97	B	I	19.52	0.80	0.79	1.08	A	I	33.63	

LOAD FACTORS:

	LIMIT STATE	γ_{DC}	γ_{DW}
DESIGN LOAD RATING FACTORS	STRENGTH I	1.25	1.50
	SERVICE III	1.00	1.00

NOTES:

MINIMUM RATING FACTORS ARE BASED ON THE STRENGTH I AND SERVICE III LIMIT STATES.

ALLOWABLE STRESSES FOR SERVICE III LIMIT STATE ARE AS REQUIRED FOR DESIGN.

COMMENTS:

1. MINIMUM RATING FACTOR FOR SPAN C EXTERIOR GIRDER ALSO 1.08.
2. TRANSFORMING ALL PRESTRESSING TENDONS.
3. GIRDERS DESIGNED AS SIMPLE SPANS FOR FLEXURE.
4. GIRDERS DESIGNED AS SIMPLE-MADE-CONTINUOUS (FOR LIVE AND SUPERIMPOSED DEAD LOAD) FOR SHEAR.
5. FACTORED SHEAR AND MOMENT CAPACITIES PROVIDED FOR STRENGTH I LIMIT STATE. SECTION PROPERTIES PROVIDED FOR SERVICE III LIMIT STATE.
6. GIRDERS LOAD RATED AS SIMPLE SPANS.

(#) CONTROLLING LOAD RATING
(1) DESIGN LOAD RATING (HL-93)
(2) DESIGN LOAD RATING (HS-20)
(3) LEGAL LOAD RATING **
** SEE CHART FOR VEHICLE TYPE
GIRDER LOCATION
I - INTERIOR GIRDER
E - EXTERIOR GIRDER

STRUCTURAL RESISTANCES		
SPAN A INTERIOR GIRDER (I)	Φ Mn (KIP-FT) @ 0.5L	5200.8
SPAN C EXTERIOR GIRDER (E)	Φ Mn (KIP-FT) @ 0.5L	8138.4

SECTION PROPERTIES SPAN A - INTERIOR			
	UNITS	NON-COMPOSITE	COMPOSITE
HEIGHT	IN	54.0	62.5
AREA	IN^2	812	1556
Ixx	IN^4	264,797	714,524
Ycg	IN	24.35	40.62
SELF WT.	PLF	822	1778
EFF. WIDTH	IN	--	108.0

SECTION PROPERTIES PROVIDED AT MIDSPAN

SECTION PROPERTIES SPAN C - EXTERIOR			
	UNITS	NON-COMPOSITE	COMPOSITE
HEIGHT	IN	54.0	62.5
AREA	IN^2	827	1449
Ixx	IN^4	276,646	684,127
Ycg	IN	24.10	38.86
SELF WT.	PLF	822	1623
EFF. WIDTH	IN	--	108.0

SECTION PROPERTIES PROVIDED AT MIDSPAN

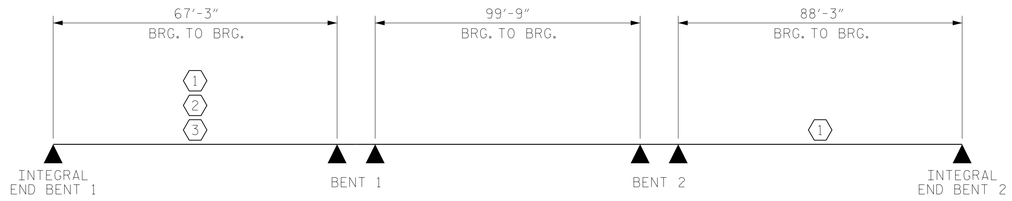

LRFR SUMMARY

PROJECT NO. B-4590

NEW HANOVER COUNTY

STATION: 18+44.50 -L-

NORTH CAROLINA PROFESSIONAL ENGINEER SEAL 18442 LEON BOLLINGER JR. 6/6/2021

RS&H

RS&H Architects-Engineers-Planners, Inc.
8521 Six Forks Road, Suite 400
Raleigh, NC 27615
919-926-4100 FAX 919-846-9080
www.rsandh.com
North Carolina License Nos. 50073 * F-0493 * C-28

STATE OF NORTH CAROLINA
DEPARTMENT OF TRANSPORTATION
RALEIGH

SUPERSTRUCTURE

LRFR SUMMARY FOR PRESTRESSED CONCRETE GIRDERS (NON-INTERSTATE TRAFFIC)

REVISIONS						SHEET NO.
NO.	BY:	DATE:	NO.	BY:	DATE:	S-4
1			3			TOTAL SHEETS
2			4			42

DRAWN BY : TWL DATE : 06/2018
CHECKED BY : MKO DATE : 07/2018
DESIGN ENGINEER OF RECORD: RLB DATE : 06/2021

DOCUMENT NOT CONSIDERED FINAL UNLESS ALL SIGNATURES COMPLETED

6/4/2021
X:\P\10300036006 Div 3 B-4590\Design\Structures\Working DGN\FinalPlans\401_007_B4590_SMU_LRFR_S-4_640029.dgn
CuanyN

DocuSign Envelope ID: 067A235F-0381-4EA9-9E6C-859425BCECAB

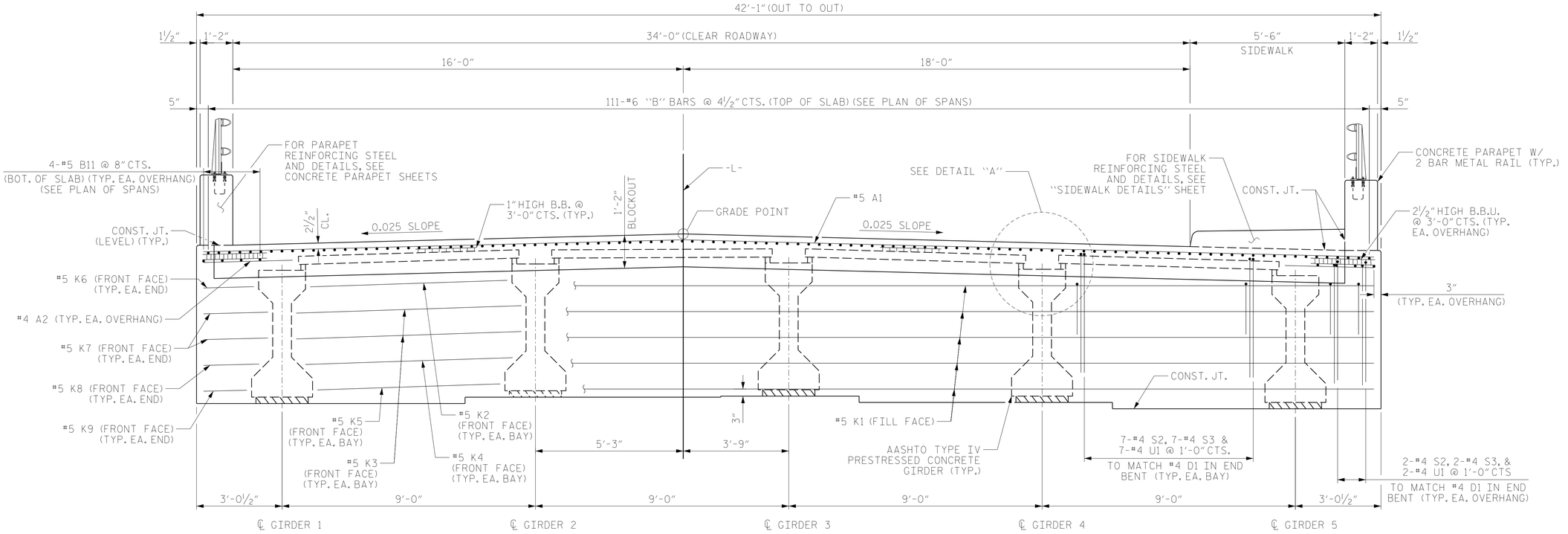

TYPICAL SECTION AT INTEGRAL END BENTS

END BENT 1 SHOWN, END BENT 2 SIMILAR

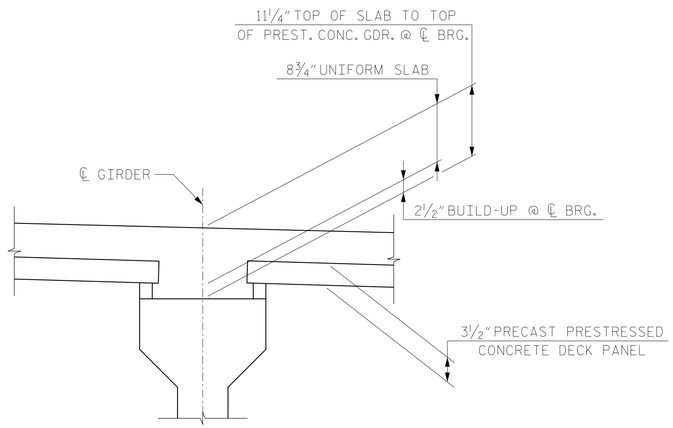

DETAIL "A"

NOTES

LONGITUDINAL REINFORCING STEEL ("B" BARS) MAY BE SHIFTED SLIGHTLY, AS NECESSARY, TO AVOID INTERFERENCE WITH STIRRUPS IN PRESTRESSED CONCRETE GIRDERS.

PREVIOUSLY CAST CONCRETE IN A CONTINUOUS UNIT SHALL HAVE ATTAINED A MINIMUM COMPRESSIVE STRENGTH OF 3,000 PSI BEFORE ADDITIONAL CONCRETE IS CAST IN THE UNIT.

CONCRETE PARAPETS AND SIDEWALK IN A CONTINUOUS UNIT SHALL NOT BE CAST UNTIL ALL DECK SLAB CONCRETE IN THAT UNIT HAS BEEN CAST AND HAS ATTAINED A MINIMUM COMPRESSIVE STRENGTH OF 3,000 PSI.

ALL BAR SUPPORTS USED IN THE PARAPET, SIDEWALK, DECK, AND ALL INCIDENTAL REINFORCING STEEL SHALL BE EPOXY COATED IN ACCORDANCE WITH THE STANDARD SPECIFICATIONS.

THE TOP K1 BAR MAY BE SHIFTED DOWNWARD AS NECESSARY TO AVOID THE APPROACH SLAB BLOCKOUT.

PROJECT NO. B-4590

NEW HANOVER COUNTY

STATION: 18+44.50 -L-

SHEET 1 OF 3

NORTH CAROLINA PROFESSIONAL SEAL 038427 ENGINEER RICHARD LEON BOLLINGER JR.

6/6/2021

RS&H

RS&H Architects-Engineers-Planners, Inc.
8521 Six Forks Road, Suite 400
Raleigh, NC 27615
919-926-4100 FAX 919-846-9080
www.rsandh.com
North Carolina License Nos. 50073 * F-0493 * C-28

STATE OF NORTH CAROLINA
DEPARTMENT OF TRANSPORTATION
RALEIGH

SUPERSTRUCTURE

TYPICAL SECTION

REVISIONS						SHEET NO.
NO.	BY:	DATE:	NO.	BY:	DATE:	S-5
1			3			TOTAL SHEETS
2			4			42

DRAWN BY : NSC DATE : 06/2018
CHECKED BY : JMR DATE : 07/2018
DESIGN ENGINEER OF RECORD: RLB DATE : 06/2021

DOCUMENT NOT CONSIDERED FINAL UNLESS ALL SIGNATURES COMPLETED

6/4/2021
X:\P\1030036006 Div 3 B-4590\Design\Structures\Working DGN\FinalPlans\401_009_B4590_SMU_TS_S-5_640029.dgn
CuanyN

DocuSign Envelope ID: 067A235F-0381-4EA9-9E6C-859425BCECAB

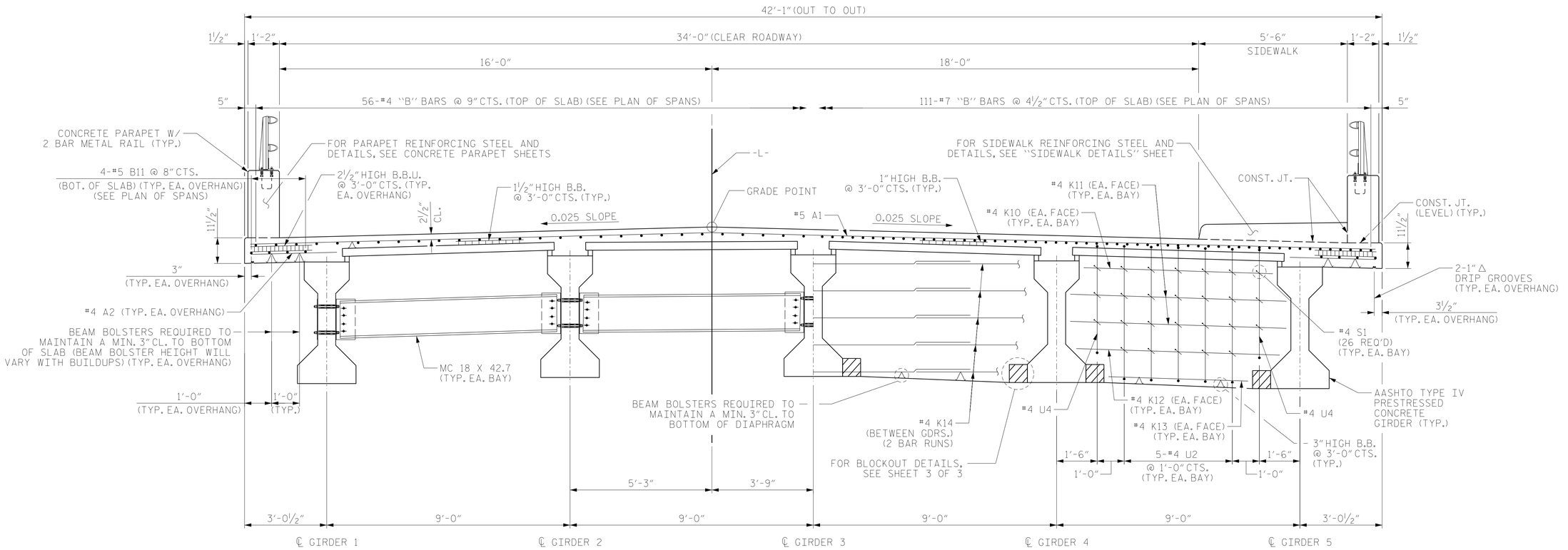

SECTION AT INTERMEDIATE DIAPHRAGM

SECTION AT CONTINUOUS BENT DIAPHRAGM

TYPICAL SECTION

NOTES

FOR NOTES, SEE SHEET 1 OF 3.

PROJECT NO. B-4590

NEW HANOVER COUNTY

STATION: 18+44.50 -L-

SHEET 2 OF 3

NORTH CAROLINA PROFESSIONAL ENGINEER SEAL 18442 RICHARD LEON BOLLINGER, JR. 6/6/2021

RS&H

RS&H Architects-Engineers-Planners, Inc.
8521 Six Forks Road, Suite 400
Raleigh, NC 27615
919-926-4100 FAX 919-846-9080
www.rsandh.com
North Carolina License Nos. 50073 * F-0493 * C-28

STATE OF NORTH CAROLINA
DEPARTMENT OF TRANSPORTATION
RALEIGH

SUPERSTRUCTURE

TYPICAL SECTION

REVISIONS						SHEET NO.
NO.	BY:	DATE:	NO.	BY:	DATE:	S-6
1			3			TOTAL SHEETS
2			4			42

DRAWN BY : NSC DATE : 06/2018
CHECKED BY : JMR DATE : 07/2018
DESIGN ENGINEER OF RECORD: RLB DATE : 06/2021

DOCUMENT NOT CONSIDERED FINAL UNLESS ALL SIGNATURES COMPLETED

6/4/2021
X:\P\10300036006 Div 3 B-4590\Design\Structures\Working DGN\FinalPlans\401_011_B4590_SMU_TS_S-6_640029.dgn
CuanyN

DocuSign Envelope ID: 067A235F-0381-4EA9-9E6C-859425BCECAB

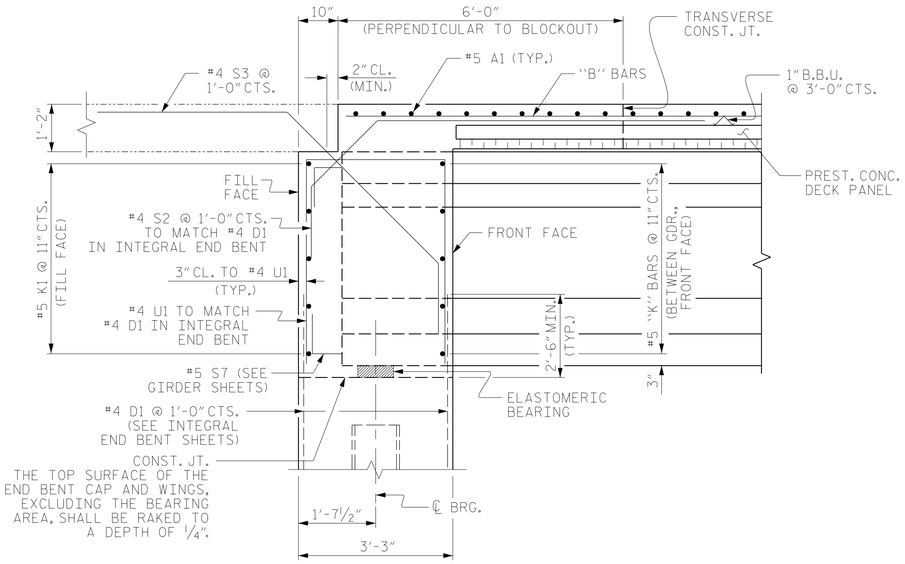

SECTION THROUGH INTEGRAL END BENT

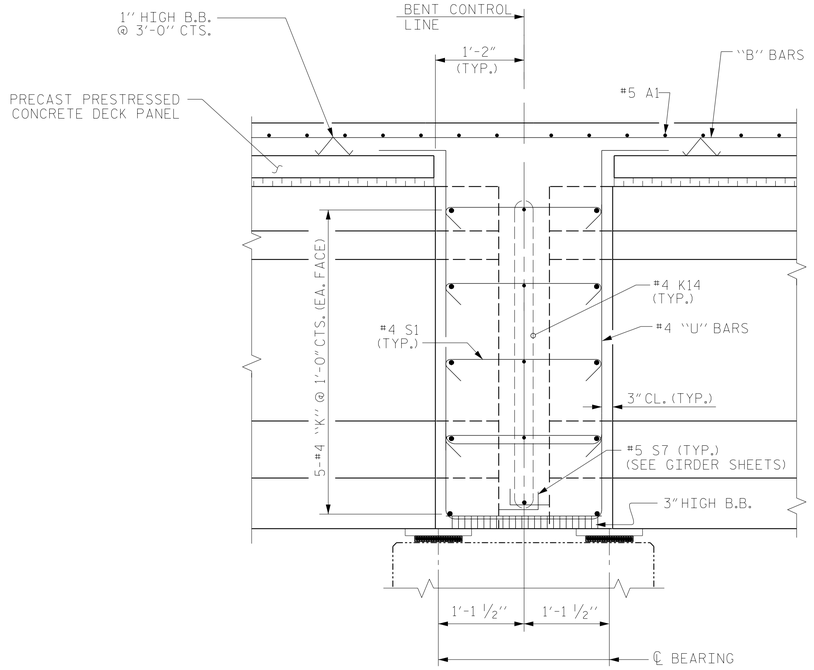

SECTION THROUGH CONTINUOUS BENT DIAPHRAGM

NOTES

FOR NOTES, SEE SHEET 1 OF 3.

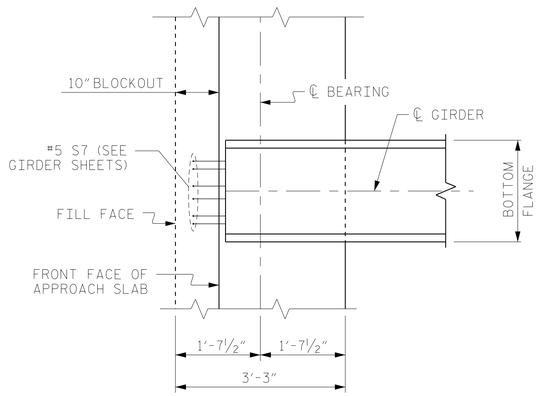

PLAN OF GIRDER AT INTEGRAL END BENT

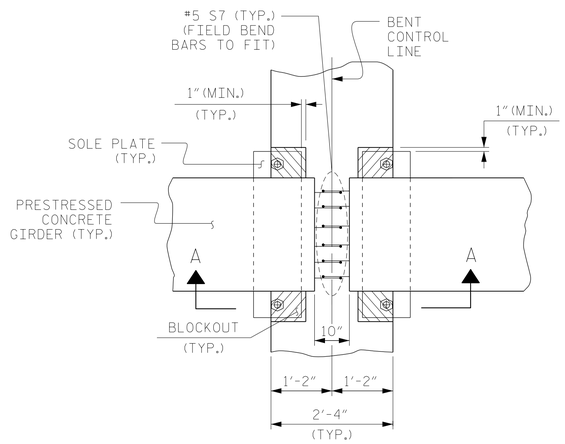

PLAN VIEW

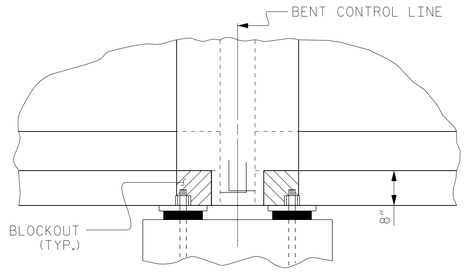

SECTION A-A

BENT DIAPHRAGM BLOCKOUT DETAIL

(PRESTRESSED GIRDERS WITH CONTINUOUS DECK SLAB)

PROJECT NO. B-4590

NEW HANOVER COUNTY

STATION: 18+44.50 -L-

SHEET 3 OF 3

NORTH CAROLINA PROFESSIONAL ENGINEER SEAL 18442 RICHARD LEON BOLLINGER JR. 6/6/2021

RS&H

RS&H Architects-Engineers-Planners, Inc.
8521 Six Forks Road, Suite 400
Raleigh, NC 27615
919-926-4100 FAX 919-846-9080
www.rsandh.com
North Carolina License Nos. 50073 * F-0493 * C-28

STATE OF NORTH CAROLINA
DEPARTMENT OF TRANSPORTATION
RALEIGH

SUPERSTRUCTURE

TYPICAL SECTION DETAILS

REVISIONS						SHEET NO.
NO.	BY:	DATE:	NO.	BY:	DATE:	S-7
1			3			TOTAL SHEETS
2			4			42

DOCUMENT NOT CONSIDERED FINAL UNLESS ALL SIGNATURES COMPLETED

DRAWN BY : NSC DATE : 06/2018
CHECKED BY : JMR DATE : 07/2018
DESIGN ENGINEER OF RECORD: RLB DATE : 06/2021

6/4/2021
X:\P\10300036006 Div 3 B-4590\Design\Structures\Working DGN\FinalPlans\401_013_B4590_SMU_TS_S-7_640029.dgn
CuanyN

DocuSign Envelope ID: 067A235F-0381-4EA9-9E6C-859425BCECAB

DECK PANEL SUPPORTS

THE CONTRACTOR SHALL PROVIDE THE DECK PANEL SUPPORT SYSTEM SHOWN OR HE MAY SUBMIT A DECK PANEL SUPPORT SYSTEM OF HIS OWN DESIGN TO THE ENGINEER FOR APPROVAL.

POLYSTYRENE SUPPORT SYSTEM

1. ALL POLYSTYRENE SHALL BE DOW STYROFOAM 60 HIGH-LOAD, UC INDUSTRIES FOAMULAR 600 OR APPROVED EQUAL.
2. THE POLYSTYRENE SUPPORT SYSTEM SHALL CONSIST OF ONE LAYER WITH A MINIMUM WIDTH OF 1½" AND A MAXIMUM WIDTH OF 2". THE POLYSTYRENE SHALL HAVE ½" X ½" WIDE SLOTS OR ½" DIAMETER HOLES AT 4'-0" CENTERS STAGGERED ALONG THE TOP AND BOTTOM.
3. THE POLYSTYRENE MAY BE CUT AND PLACED ON EDGE AS NECESSARY TO MATCH THE REQUIRED BUILDUP PROFILE ALONG THE GIRDER.
4. ADHESIVE, AS APPROVED BY THE ENGINEER, SHALL BE APPLIED TO THE TOP OF THE GIRDER IN A CONTINUOUS BEAD AND IN SUFFICIENT AMOUNT TO PREVENT THE POLYSTYRENE FROM BLOWING OUT AND TO PREVENT GAPS FROM FORMING BETWEEN THE POLYSTYRENE AND THE GIRDER. PRIOR TO PLACEMENT OF THE DECK PANELS, THE ADHESIVE SHALL ALSO BE APPLIED TO THE TOP OF THE POLYSTYRENE.
5. CONCRETE-FILLED BUCKETS, STACKS OF DECK PANELS, BUNDLED REINFORCING BARS OR OTHER HEAVY CONCENTRATED LOADS WILL NOT BE PERMITTED ON THE DECK PANEL ONCE THE PANEL HAS BEEN PLACED ON THE POLYSTYRENE SUPPORT SYSTEM.

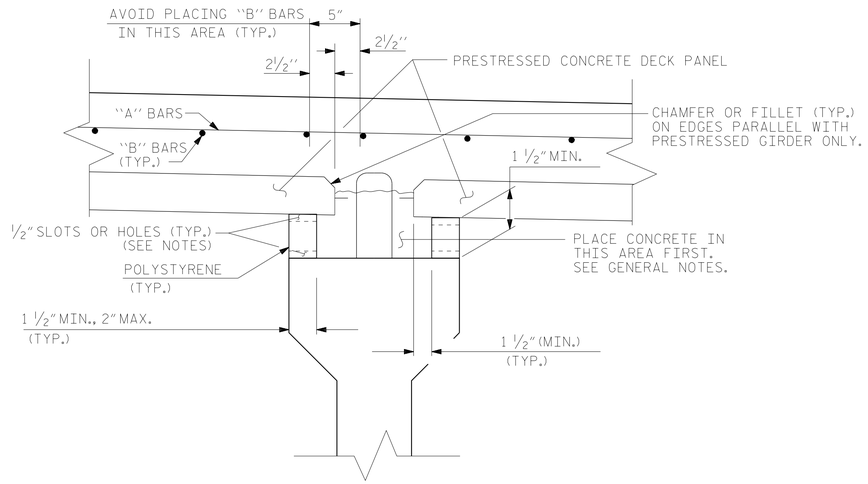

POLYSTYRENE SUPPORT

GENERAL NOTES

1. THE DESIGN COMPRESSIVE STRENGTH (f'c) FOR THE CONCRETE IN PRESTRESSED PANELS SHALL BE 5000 PSI MINIMUM AT 28 DAYS. COMPRESSIVE STRENGTH OF CONCRETE AT TIME OF RELEASE OF STRANDS SHALL BE 4000 PSI MINIMUM.
2. THE PRECAST PRESTRESSED PANEL SHALL HAVE A THICKNESS OF 3 ½" WITH THE PRESTRESSED STRANDS LOCATED AT HALF THE DEPTH OF THE PANEL.
3. FOR SKEWED SPANS, TRAPEZOIDAL CLOSURE PANELS SHALL HAVE A MINIMUM WIDTH OF 2 FEET ON THE SHORT SIDE.
4. ALL PRESTRESSING STRANDS SHALL EXTEND 2" BEYOND THE PANEL EDGES.
5. SHEAR REINFORCING OF 0.60 SQ. INCHES OF REINFORCING STEEL PER 10 SQ. FEET OF PANEL SURFACE SHALL BE PROVIDED IN THE PANEL TO ENSURE COMPOSITE ACTION BETWEEN PANEL AND THE CAST-IN-PLACE CONCRETE. SHEAR REINFORCEMENT SHALL BE MADE OF WELDED WIRE HAVING A MINIMUM YIELD STRENGTH OF 60 KSI.
6. SHEAR REINFORCEMENT AND LIFTING DEVICES SHALL BE CONSTRUCTED AND PLACED SO AS TO AVOID ANY INTERFERENCE WITH REINFORCING STEEL IN THE CAST-IN-PLACE DECK SLAB AND TO ALLOW FOR PROPER CONCRETE CONSOLIDATION IN THE DECK PANEL.
7. SHIFT LONGITUDINAL "B" BARS AS NECESSARY TO OBTAIN A MINIMUM CLEAR DISTANCE OF 2 ½" TO THE RIGHT OR LEFT OF THE EDGE OF THE DECK PANEL. IF, IN SHIFTING TO OBTAIN THIS CLEARANCE, THE "B" BAR INTERFERES WITH THE STIRRUP IN THE TOP OF THE GIRDER THE "B" BAR MAY BE ELIMINATED.
8. WHEN CASTING THE DECK, PLACE CONCRETE FIRST OVER THE GIRDERS IN CONTINUOUS STRIPS A MINIMUM OF THREE PANEL LENGTHS AHEAD OF THE REST OF THE CONCRETE. CAREFULLY VIBRATE THE CONCRETE OVER THE GIRDERS SO THAT CONCRETE COMPLETELY FILLS THE AREA UNDER THE DECK PANEL OVERHANGS. THEN PLACE AND VIBRATE THE REMAINING DECK CONCRETE.
9. PRECAST PANELS SHALL BE DESIGNED FOR AN ALLOWABLE TENSILE STRESS OF 0 PSI IN THE PRECOMPRESSED TENSILE ZONE UNDER ALL LOADING CONDITIONS.
10. PRESTRESSED CONCRETE DECK PANELS SHALL CONTAIN CALCIUM NITRITE CORROSION INHIBITOR IN ACCORDANCE WITH THE STANDARD SPECIFICATIONS.

PROJECT NO. B-4590
NEW HANOVER COUNTY
STATION: 18+44.50 -L-

ASSEMBLED BY : TWL	DATE : 06/2018	
CHECKED BY : MKO	DATE : 07/2018	
DRAWN BY : ELR 1/92	REV. 5/1/06R	TLA/GM
CHECKED BY : GRP 4/92	REV. 10/1/11	MAA/GM
	REV. 12/17	MAA/THC

NORTH CAROLINA PROFESSIONAL ENGINEER SEAL 18442 LEON BOLLINGER
6/6/2021

RS&H

RS&H Architects-Engineers-Planners, Inc.
8521 Six Forks Road, Suite 400
Raleigh, NC 27615
919-926-4100 FAX 919-846-9080
www.rsandh.com
North Carolina License Nos. 50073 ° F-0493 ° C-28

DOCUMENT NOT CONSIDERED FINAL UNLESS ALL SIGNATURES COMPLETED

STATE OF NORTH CAROLINA
DEPARTMENT OF TRANSPORTATION
RALEIGH

STANDARD

PRECAST PRESTRESSED CONCRETE DECK PANELS

REVISIONS						SHEET NO.
NO.	BY:	DATE:	NO.	BY:	DATE:	S-8
1			3			TOTAL SHEETS
2			4			42

6/4/2021
X:\P\1030036006 Div 3 B-4590\Design\Structures\Working DGN\Final Plans\401_015_B4590_SMU_PDP_S-8_640029.dgn
CuanyN

STD. NO. PDP1

DocuSign Envelope ID: 067A235F-0381-4EA9-9E6C-859425BCECAB

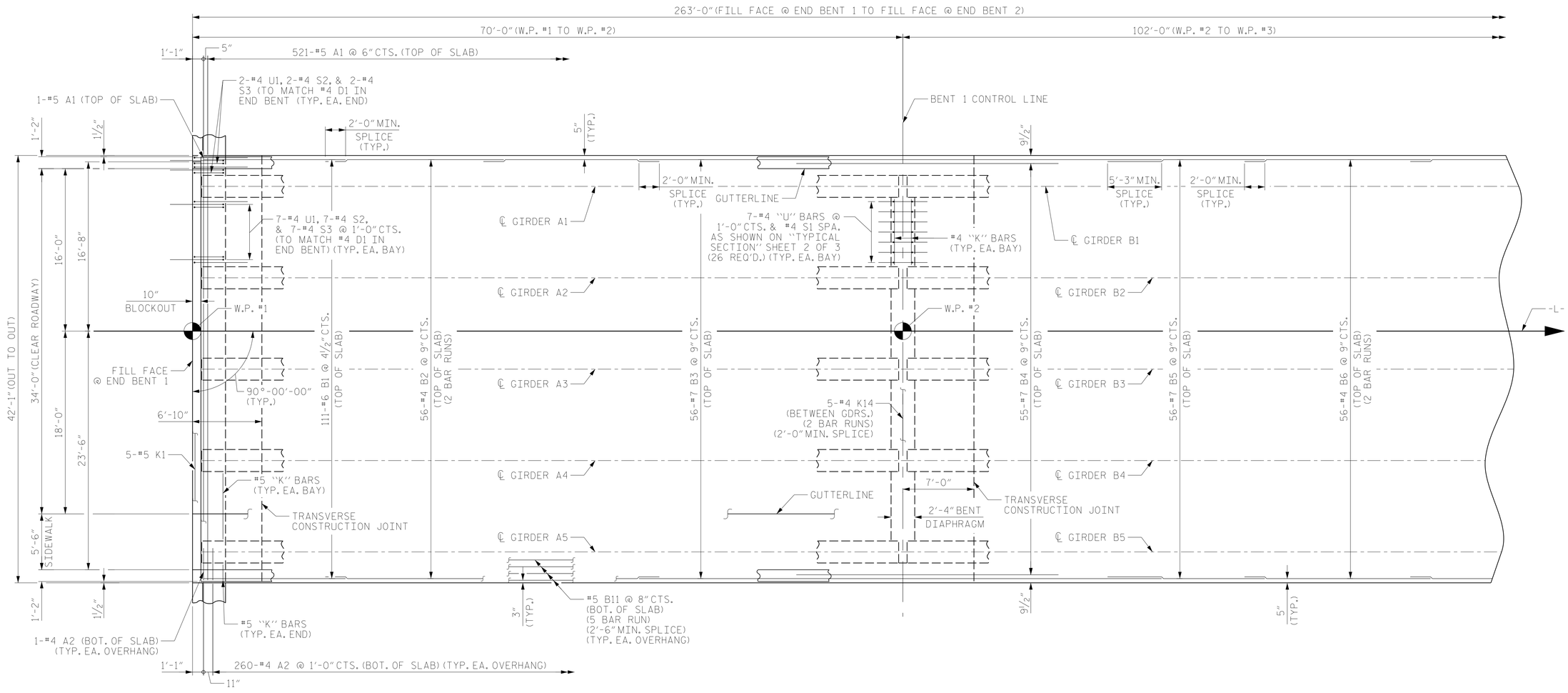

SPAN A SPAN B

PLAN OF SPAN A AND PART PLAN OF SPAN B

NOTES

FOR SPLICE LENGTHS NOT SHOWN, REFER TO MINIMUM SPLICE LENTH TABLE ON "SUPERSTRUCTURE BILL OF MATERIAL" SHEET.

FOR END BENT DIAPHRAGM BARS AND BENT DIAPHRAGM BARS, SEE TYPICAL SECTION SHEETS.

STEEL INTERMEDIATE DIAPHRAGMS NOT SHOWN FOR CLARITY. FOR LOCATIONS, SEE "FRAMING PLAN" SHEET.

FOR POURING SEQUENCE, SEE "SUPERSTRUCTURE BILL OF MATERIAL" SHEET.

FOR CONCRETE PARAPET REINFORCING STEEL, SEE CONCRETE PARAPET SHEETS.

FOR SIDEWALK REINFORCING STEEL, SEE "SIDEWALK DETAILS" SHEET.

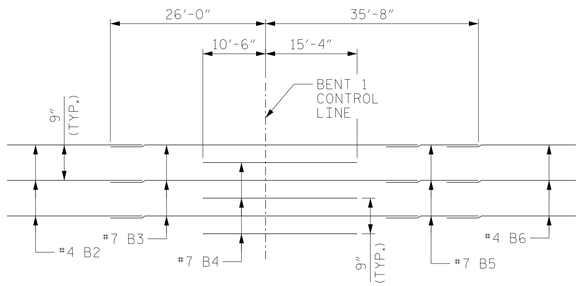

TOP OF SLAB
REINFORCING STEEL LAYOUT

PROJECT NO. B-4590
NEW HANOVER COUNTY
STATION: 18+44.50 -L-

SHEET 1 OF 2

NORTH CAROLINA PROFESSIONAL ENGINEER SEAL 18442 RICHARD LEON BOTTNER, JR. 6/6/2021

RS&H

RS&H Architects-Engineers-Planners, Inc.
8521 Six Forks Road, Suite 400
Raleigh, NC 27615
919-926-4100 FAX 919-846-9080
www.rsandh.com
North Carolina License Nos. 50073 * F-0493 * C-28

STATE OF NORTH CAROLINA
DEPARTMENT OF TRANSPORTATION
RALEIGH

SUPERSTRUCTURE

PLAN OF SPAN A AND PART PLAN OF SPAN B

REVISIONS						SHEET NO.
NO.	BY:	DATE:	NO.	BY:	DATE:	S-9
1			3			TOTAL SHEETS
2			4			42

DRAWN BY : TWL DATE : 06/2018
CHECKED BY : MKO DATE : 07/2018
DESIGN ENGINEER OF RECORD: RLB DATE : 06/2021

DOCUMENT NOT CONSIDERED FINAL UNLESS ALL SIGNATURES COMPLETED

6/4/2021
\\rsandh.com\files\Transportation\P\1030036006 Div 3 B-4590\Design\Structures\Working DGN\FinalPlans\401_017_B4590_SMU_S1_S-9_640029.dgn
CuanyN

DocuSign Envelope ID: 067A235F-0381-4EA9-9E6C-859425BCECAB

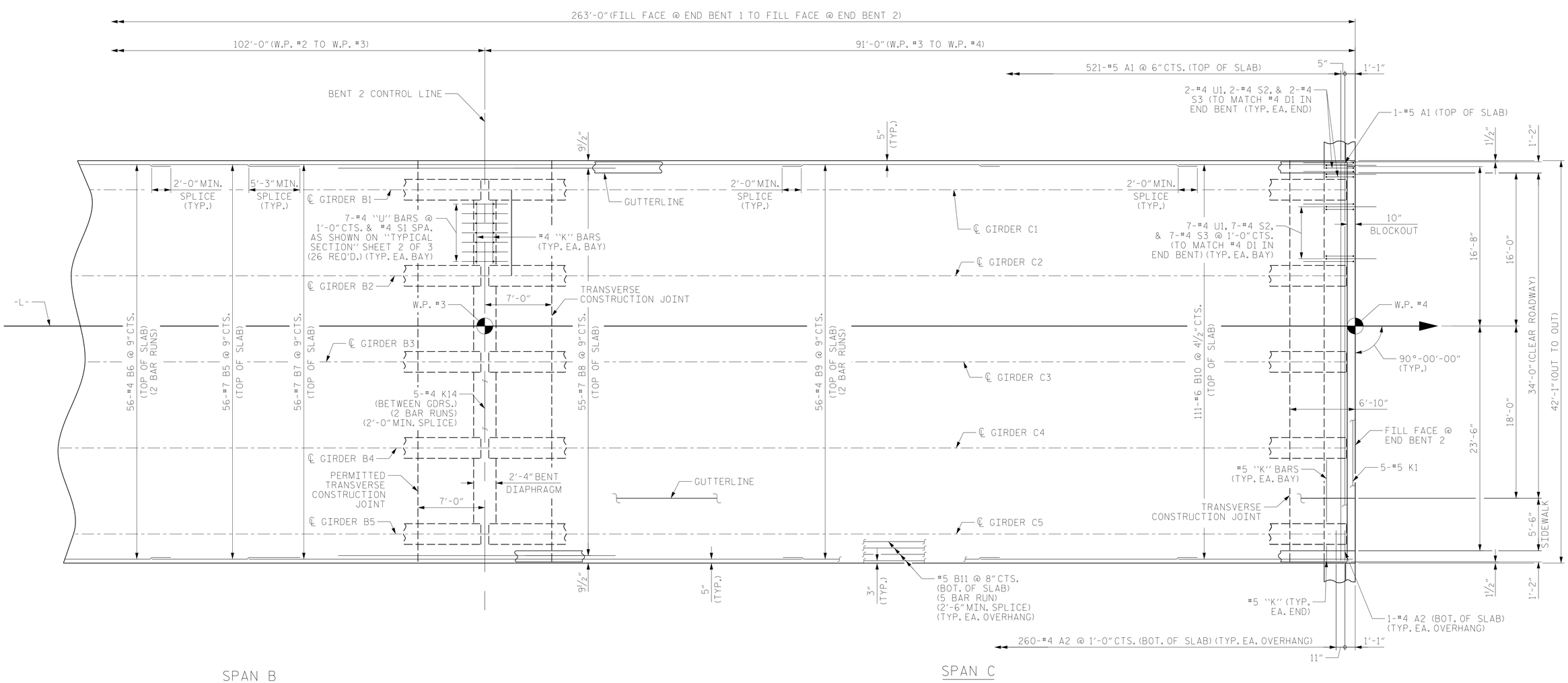

SPAN B

SPAN C

PART PLAN OF SPAN B AND PLAN OF SPAN C

NOTES

FOR SPLICE LENGTHS NOT SHOWN, REFER TO MINIMUM SPLICE LENTH TABLE ON "SUPERSTRUCTURE BILL OF MATERIAL" SHEET.

FOR END BENT DIAPHRAGM BARS AND BENT DIAPHRAGM BARS, SEE TYPICAL SECTION SHEETS.

STEEL INTERMEDIATE DIAPHRAGMS NOT SHOWN FOR CLARITY. FOR LOCATIONS, SEE "FRAMING PLAN" SHEET.

FOR POURING SEQUENCE, SEE "SUPERSTRUCTURE BILL OF MATERIAL" SHEET.

FOR CONCRETE PARAPET REINFORCING STEEL, SEE CONCRETE PARAPET SHEETS.

FOR SIDEWALK REINFORCING STEEL, SEE "SIDEWALK DETAILS" SHEET.

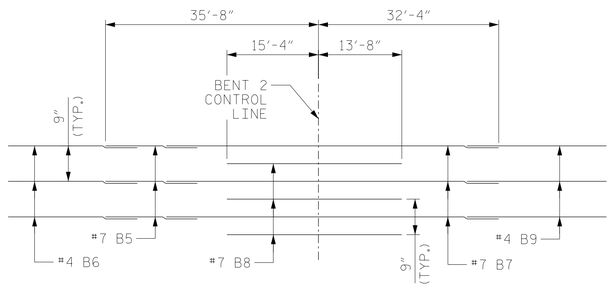

TOP OF SLAB
REINFORCING STEEL LAYOUT

PROJECT NO. B-4590
NEW HANOVER COUNTY
STATION: 18+44.50 -L-

SHEET 2 OF 2

NORTH CAROLINA PROFESSIONAL ENGINEER SEAL 18442 LEON BOLLINGER
6/6/2021

RS&H Architects-Engineers-Planners, Inc.
8521 Six Forks Road, Suite 400
Raleigh, NC 27615
919-926-4100 FAX 919-846-9080
www.rsandh.com
North Carolina License Nos. 50073 * F-0493 * C-28

STATE OF NORTH CAROLINA
DEPARTMENT OF TRANSPORTATION
RALEIGH

SUPERSTRUCTURE

PART PLAN OF SPAN B AND PLAN OF SPAN C

REVISIONS						SHEET NO.
NO.	BY:	DATE:	NO.	BY:	DATE:	S-10
1			3			TOTAL SHEETS
2			4			42

DRAWN BY : NSC DATE : 06/2018
CHECKED BY : MKO DATE : 07/2018
DESIGN ENGINEER OF RECORD: RLB DATE : 06/2021

DOCUMENT NOT CONSIDERED FINAL UNLESS ALL SIGNATURES COMPLETED

6/4/2021
X:\P\1030036006 Div 3 B-4590\Design\Structures\Working DGN\FinalPlans\401_019_B4590_SMU_S2_S-10_640029.dgn
CuonyN

DocuSign Envelope ID: 067A235F-0381-4EA9-9E6C-859425BCECAB

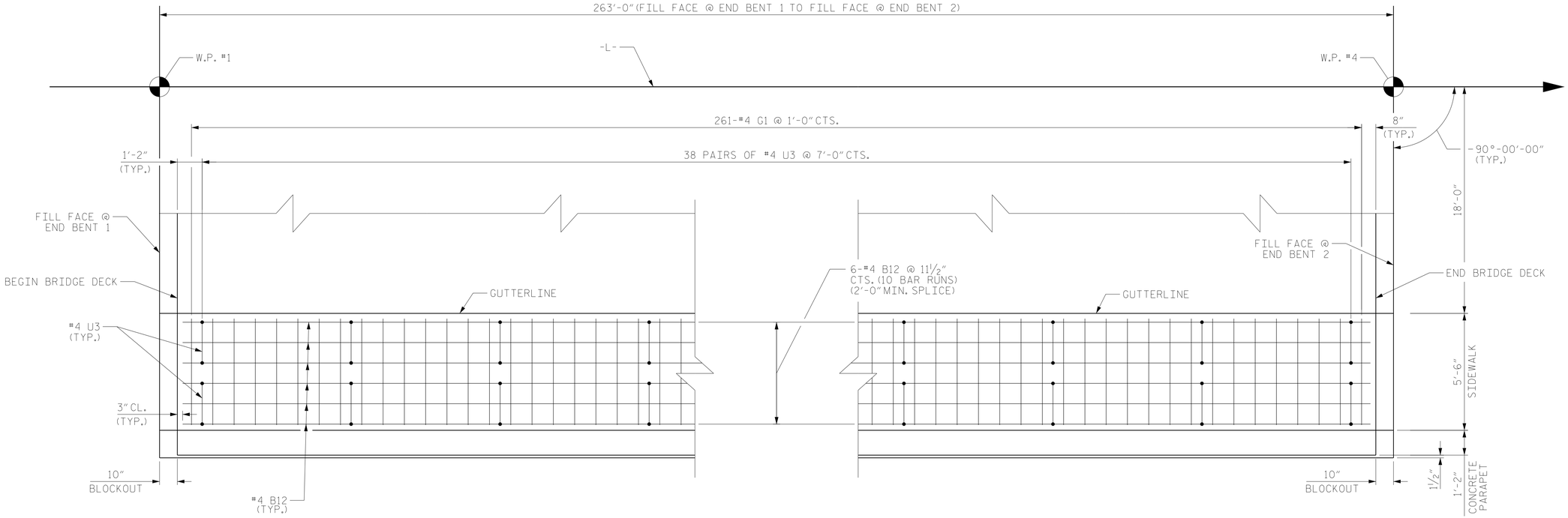

PLAN OF SIDEWALK

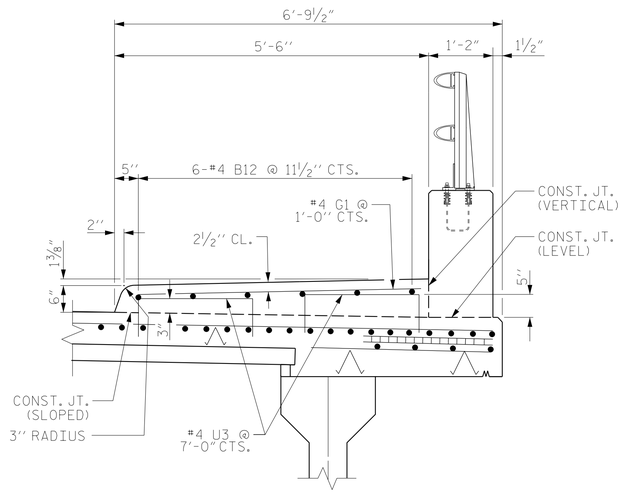

SECTION THROUGH SIDEWALK

NOTES

GROOVED CONTRACTION JOINTS, ½" IN DEPTH, SHALL BE TOOLED IN ALL EXPOSED FACES OF THE SIDEWALK IN ACCORDANCE WITH ARTICLE 825-10(B) OF THE STANDARD SPECIFICATIONS. THE CONTRACTION JOINTS SHALL BE LOCATED AT A SPACING OF 8 FT. TO 10 FT. BETWEEN EXPANSION JOINTS. NO CONTRACTION JOINTS WILL BE REQUIRED FOR SEGMENTS LESS THAN 10 FEET IN LENGTH.

ALL REINFORCING STEEL IN THE SIDEWALK SHALL BE EPOXY COATED.

FOR REINFORCING STEEL BAR TYPES AS WELL AS CONCRETE AND REINFORCING STEEL QUANTITIES, SEE "SUPERSTRUCTURE BILL OF MATERIAL" SHEET.

FOR SIDEWALK ON APPROACH SLABS, SEE APPROACH SLAB DRAWINGS.

PAYMENT FOR THE SIDEWALK SHALL BE INCLUDED IN THE PAY ITEM FOR "REINFORCED CONCRETE DECK SLAB".

U3 BARS MAY BE PUSHED INTO GREEN CONCRETE AFTER SPAN HAS BEEN SCREEDED OFF.

SIDEWALK IN A CONTINUOUS UNIT SHALL NOT BE CAST UNTIL ALL SLAB CONCRETE IN THE UNIT HAS BEEN CAST AND HAS REACHED A MINIMUM COMPRESSIVE STRENGTH OF 3000 PSI.

FOR CONCRETE PARAPET REINFORCING STEEL AND DETAILS, SEE "CONCRETE PARAPET" SHEETS.

PROJECT NO. B-4590
NEW HANOVER COUNTY
STATION: 18+44.50 -L-

NORTH CAROLINA PROFESSIONAL ENGINEER SEAL 18442 RICHARD LEON BOLLINGER JR.
6/6/2021

RS&H Architects-Engineers-Planners, Inc.
8521 Six Forks Road, Suite 400
Raleigh, NC 27615
919-926-4100 FAX 919-846-9080
www.rsandh.com
North Carolina License Nos. 50073 * F-0493 * C-28

STATE OF NORTH CAROLINA
DEPARTMENT OF TRANSPORTATION
RALEIGH

SUPERSTRUCTURE

SIDEWALK DETAILS

REVISIONS						SHEET NO.
NO.	BY:	DATE:	NO.	BY:	DATE:	S-11
1			3			TOTAL SHEETS
2			4			42

DOCUMENT NOT CONSIDERED FINAL UNLESS ALL SIGNATURES COMPLETED

DRAWN BY :	NSC	DATE : 06/2018
CHECKED BY :	MKO	DATE : 07/2018
DESIGN ENGINEER OF RECORD:	RLB	DATE : 06/2021

6/4/2021
X:\P\1030036006 Div 3 B-4590\Design\Structures\Working DGN\FinalPlans\401_021_B4590_SMU_SW_S-11_640029.dgn
CuanyN

DocuSign Envelope ID: 067A235F-0381-4EA9-9E6C-859425BCECAB

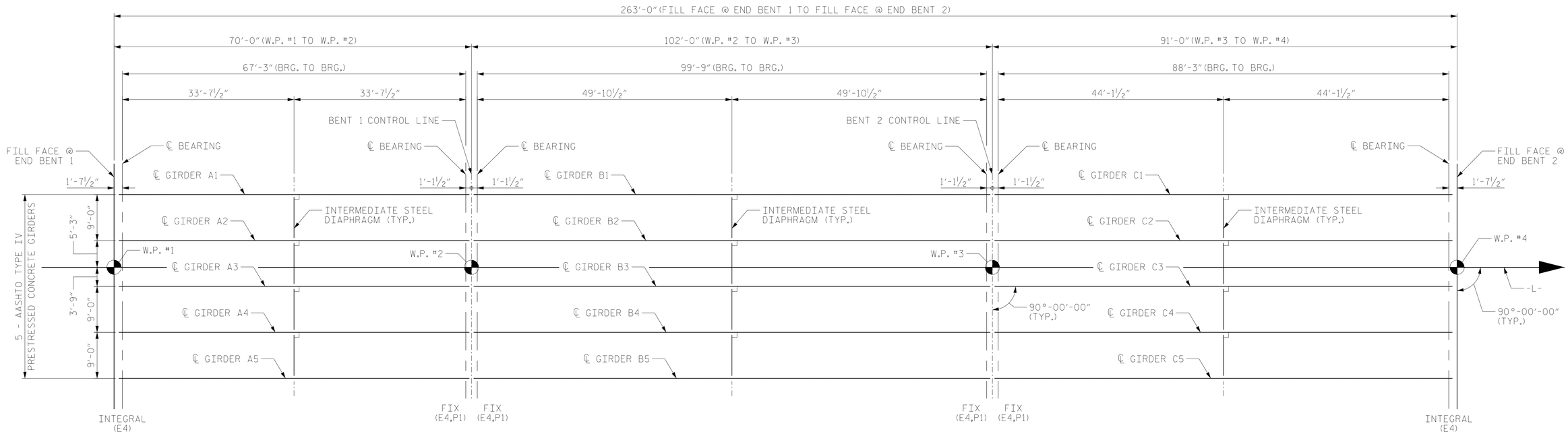

SPAN A

SPAN B

SPAN C

FRAMING PLAN

END BENT AND BENT DIAPHRAGMS
NOT SHOWN FOR CLARITY

PROJECT NO. B-4590

NEW HANOVER COUNTY

STATION: 18+44.50 -L-

NORTH CAROLINA Registered Professional SEAL 18442 ENGINEER RICHARD LEON BOLLINGER JR. SCRIBE NUMBER 18475

6/6/2021

RS&H

RS&H Architects-Engineers-Planners, Inc.
8521 Six Forks Road, Suite 400
Raleigh, NC 27615
919-926-4100 FAX 919-846-9080
www.rsandh.com
North Carolina License Nos. 50073 * F-0493 * C-28

STATE OF NORTH CAROLINA
DEPARTMENT OF TRANSPORTATION
RALEIGH

SUPERSTRUCTURE

FRAMING PLAN

REVISIONS						SHEET NO.
NO.	BY:	DATE:	NO.	BY:	DATE:	S-12
1			3			TOTAL SHEETS
2			4			42

DRAWN BY : PDS DATE : 06/2018
CHECKED BY : MKO DATE : 07/2018
DESIGN ENGINEER OF RECORD: RLB DATE : 06/2021

DOCUMENT NOT CONSIDERED FINAL UNLESS ALL SIGNATURES COMPLETED

6/4/2021
X:\P\1030036006 Div 3 B-4590\Design\Structures\Working DGN\FinalPlans\401_023_B4590_SMU_FP_S-12_640029.dgn
CuanyN

DocuSign Envelope ID: 067A235F-0381-4EA9-9E6C-859425BCECAB

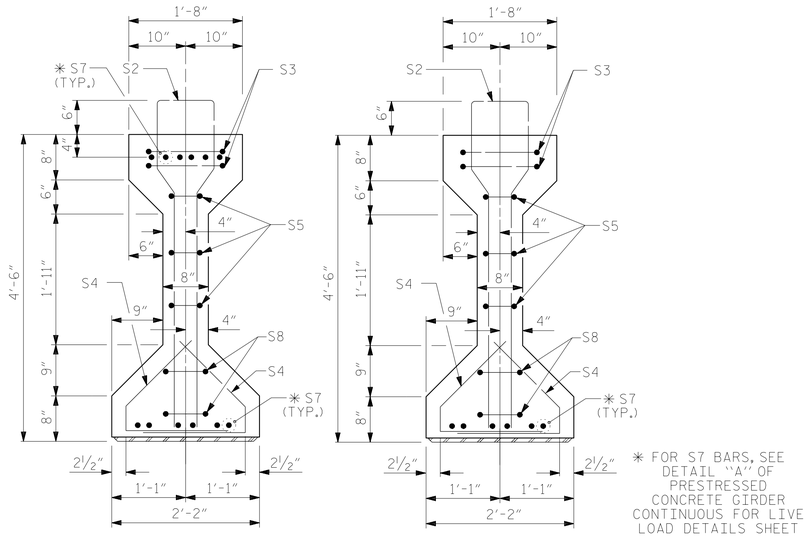

SECTION A-A

SECTION B-B

✳ FOR S7 BARS, SEE DETAIL "A" OF PRESTRESSED CONCRETE GIRDER CONTINUOUS FOR LIVE LOAD DETAILS SHEET

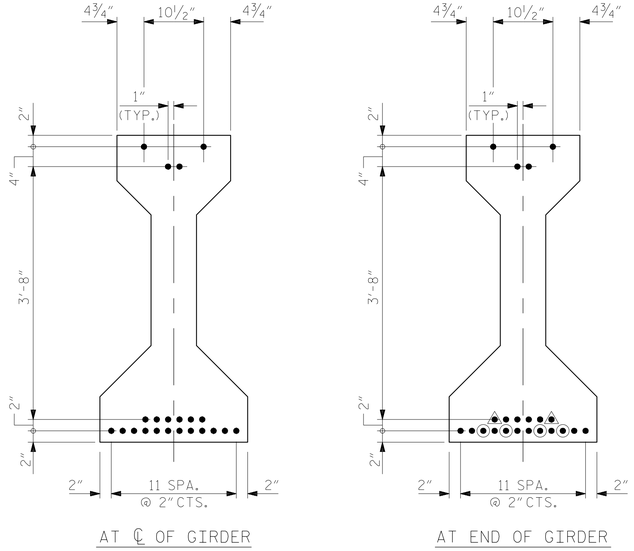

AT ℄ OF GIRDER

AT END OF GIRDER

0.6"Ø LOW RELAXATION STRAND LAYOUT

DEBONDING LEGEND

- ● FULLY BONDED STRANDS
- ◬ STRANDS DEBONDED FOR 4'-0" FROM END OF GIRDER
- ⦿ STRANDS DEBONDED FOR 6'-0" FROM END OF GIRDER

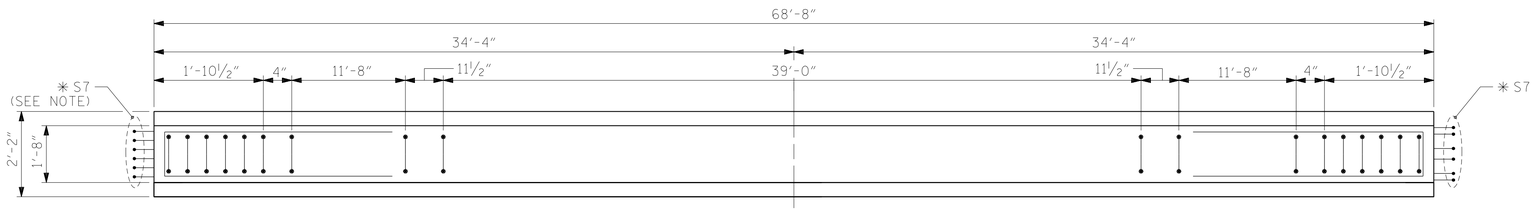

PLAN OF GIRDER

NOTE: S7 BARS IN BOTTOM BULB NOT SHOWN FOR CLARITY

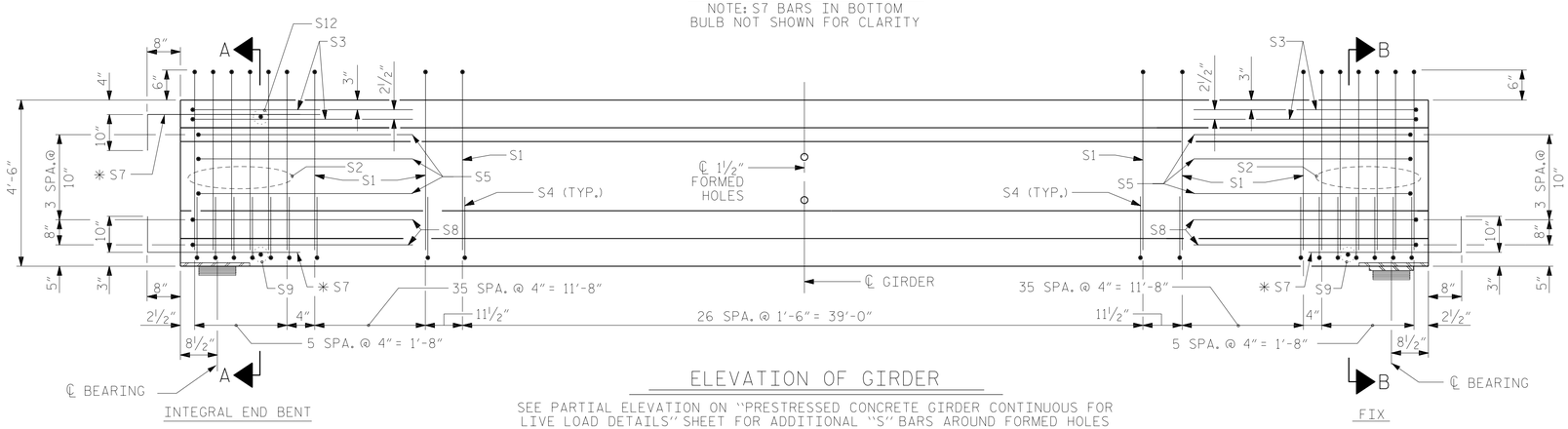

ELEVATION OF GIRDER

SEE PARTIAL ELEVATION ON "PRESTRESSED CONCRETE GIRDER CONTINUOUS FOR LIVE LOAD DETAILS" SHEET FOR ADDITIONAL "S" BARS AROUND FORMED HOLES

0.6" Ø L. R. GRADE 270 STRANDS

AREA (SQUARE INCHES)	ULTIMATE STRENGTH (LBS. PER STRAND)	APPLIED PRESTRESS (LBS. PER STRAND)
0.217	58,600	43,950

REINFORCING STEEL FOR ONE GIRDER

BAR	NUMBER	SIZE	TYPE	LENGTH	WEIGHT
S1	99	#4	1	10'-8"	705
S2	12	#6	1	10'-8"	192
S3	4	#4	2	9'-1"	24
S4	222	#4	3	3'-5"	507
S5	6	#4	2	8'-5"	34
✳S7	18	#5	STR	3'-8"	69
S8	4	#4	2	8'-7"	23
S9	2	#3	STR	1'-10"	1
✳✳S10	2	#5	2	8'-8"	18
✳✳S11	5	#4	STR	7'-0"	23
S12	1	#3	STR	1'-4"	1

NOTE: ✳ S7 BARS SHALL BE BENT BEFORE SHIPMENT. HEAT BENDING SHALL NOT BE ALLOWED.
✳✳ FOR PLACEMENT OF S10 AND S11 BARS SEE "PRESTRESSED CONCRETE GIRDER CONTINUOUS FOR LIVE LOAD DETAILS" SHEET.

BAR TYPES

ALL BAR DIMENSIONS ARE OUT-TO-OUT

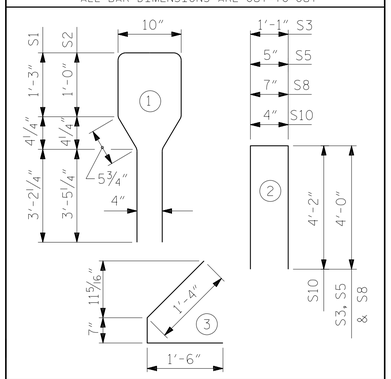

QUANTITIES FOR ONE GIRDER

	REINFORCING STEEL	7500 PSI CONCRETE	0.6"Ø L.R. STRANDS
	LB.	C.Y.	No.
	1597	13.9	22

GIRDERS REQUIRED

NUMBER	LENGTH	TOTAL LENGTH
5	68'-8"	343'-4"

PROJECT NO. B-4590

NEW HANOVER COUNTY

STATION: 18+44.50 -L-

SHEET 1 OF 4

NORTH CAROLINA PROFESSIONAL ENGINEER SEAL 18442 RICHARD LEON BOLLINGER JR. 6/6/2021

RS&H

RS&H Architects-Engineers-Planners, Inc.
8521 Six Forks Road, Suite 400
Raleigh, NC 27615
919-926-4100 FAX 919-846-9080
www.rsandh.com
North Carolina License Nos. 50073 * P-0493 * C-28

STATE OF NORTH CAROLINA
DEPARTMENT OF TRANSPORTATION
RALEIGH

SUPERSTRUCTURE

AASHTO TYPE IV PRESTRESSED CONCRETE GIRDER CONTINUOUS FOR LIVE LOAD SPAN A

REVISIONS						SHEET NO.
NO.	BY:	DATE:	NO.	BY:	DATE:	S-13
1			3			TOTAL SHEETS
2			4			42

DRAWN BY : TWL DATE : 06/2018
CHECKED BY : MKO DATE : 07/2018
DESIGN ENGINEER OF RECORD: RLB DATE : 06/2021

DOCUMENT NOT CONSIDERED FINAL UNLESS ALL SIGNATURES COMPLETED

6/4/2021
X:\P\1030036006 Div 3 B-4590\Design\Structures\Working DGN\FinalPlans\401_025_B4590_SMU_GI_S-13_640029.dgn
CuanyN

DocuSign Envelope ID: 067A235F-0381-4EA9-9E6C-859425BCECAB

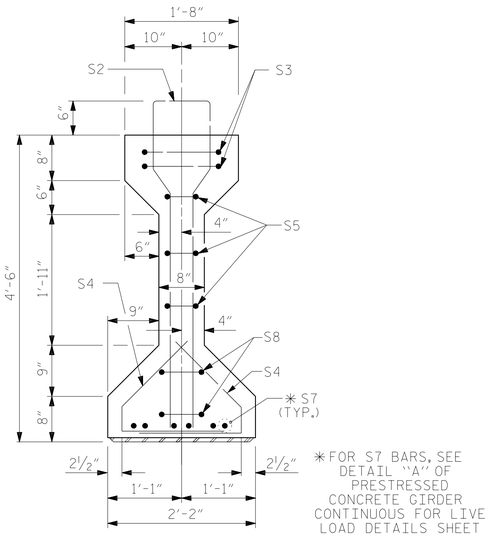

✳ FOR S7 BARS, SEE DETAIL "A" OF PRESTRESSED CONCRETE GIRDER CONTINUOUS FOR LIVE LOAD DETAILS SHEET

SECTION A-A

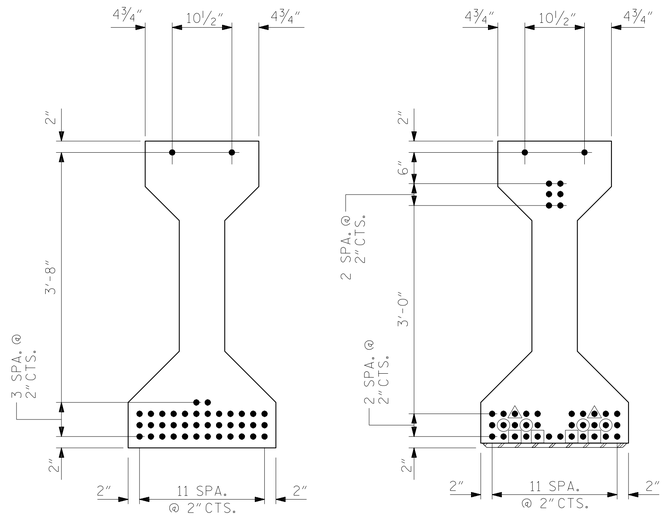

AT ℄ OF GIRDER

AT END OF GIRDER

0.6"Ø LOW RELAXATION STRAND LAYOUT

DEBONDING LEGEND

- ● FULLY BONDED STRANDS
- ▲ STRANDS DEBONDED FOR 4'-0" FROM END OF GIRDER
- ◉ STRANDS DEBONDED FOR 6'-0" FROM END OF GIRDER
- ⊡ STRANDS DEBONDED FOR 8'-0" FROM END OF GIRDER

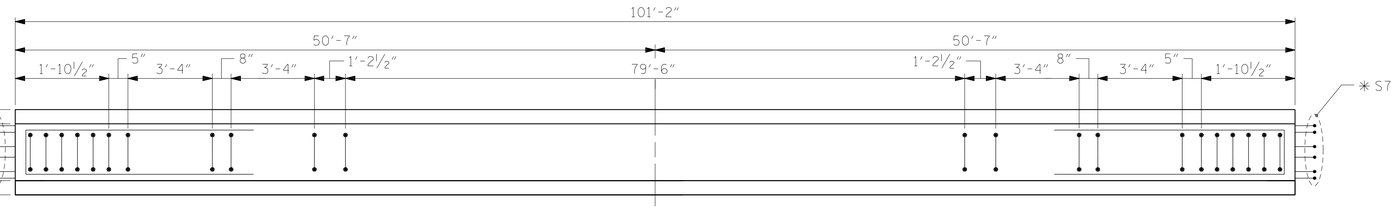

PLAN OF GIRDER

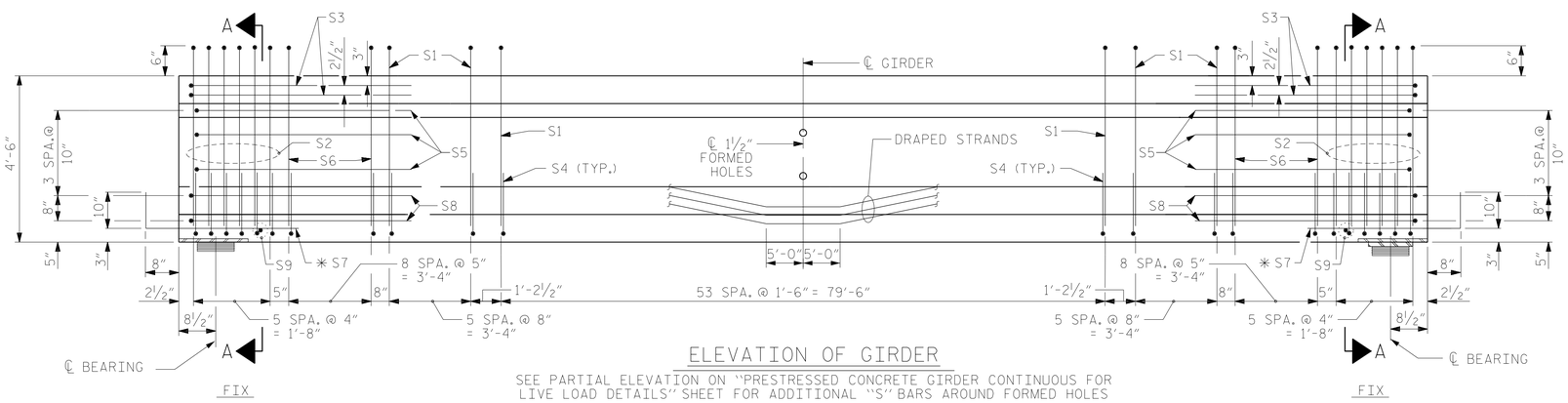

ELEVATION OF GIRDER

SEE PARTIAL ELEVATION ON "PRESTRESSED CONCRETE GIRDER CONTINUOUS FOR LIVE LOAD DETAILS" SHEET FOR ADDITIONAL "S" BARS AROUND FORMED HOLES

0.6"Ø L.R. GRADE 270 STRANDS

AREA (SQUARE INCHES)	ULTIMATE STRENGTH (LBS. PER STRAND)	APPLIED PRESTRESS (LBS. PER STRAND)
0.217	58,600	43,950

REINFORCING STEEL FOR ONE GIRDER

BAR	NUMBER	SIZE	TYPE	LENGTH	WEIGHT
S1	66	#4	1	10'-8"	470
S2	12	#6	1	10'-8"	192
S3	4	#4	2	9'-1"	24
S4	192	#4	3	3'-5"	438
S5	6	#4	2	8'-5"	34
S6	18	#5	1	10'-8"	200
✳ S7	12	#5	STR	3'-8"	46
S8	4	#4	2	8'-7"	23
S9	2	#3	STR	1'-10"	1
✳✳ S10	2	#5	2	8'-8"	18
✳✳ S11	5	#4	STR	7'-0"	23

NOTE: ✳ S7 BARS SHALL BE BENT BEFORE SHIPMENT. HEAT BENDING SHALL NOT BE ALLOWED.
✳✳ FOR PLACEMENT OF S10 AND S11 BARS SEE "PRESTRESSED CONCRETE GIRDER CONTINUOUS FOR LIVE LOAD DETAILS" SHEET.

BAR TYPES

ALL BAR DIMENSIONS ARE OUT-TO-OUT

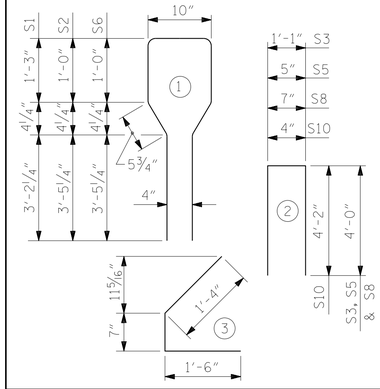

QUANTITIES FOR ONE GIRDER

	REINFORCING STEEL	7500 PSI CONCRETE	0.6"Ø L.R. STRANDS
	LB.	C.Y.	NO.
	1469	20.5	40

GIRDERS REQUIRED

NUMBER	LENGTH	TOTAL LENGTH
5	101'-2"	505'-10"

PROJECT NO. B-4590

NEW HANOVER COUNTY

STATION: 18+44.50 -L-

SHEET 2 OF 4

NORTH CAROLINA PROFESSIONAL ENGINEER SEAL 18442 RICHARD LEON BOLLINGER JR. 6/6/2021

RS&H

RS&H Architects-Engineers-Planners, Inc.
8521 Six Forks Road, Suite 400
Raleigh, NC 27615
919-926-4100 FAX 919-846-9080
www.rsandh.com
North Carolina License Nos. 50073 • F-0493 • C-28

STATE OF NORTH CAROLINA
DEPARTMENT OF TRANSPORTATION
RALEIGH

SUPERSTRUCTURE

AASHTO TYPE IV PRESTRESSED CONCRETE GIRDER CONTINUOUS FOR LIVE LOAD SPAN B

REVISIONS						SHEET NO.
NO.	BY:	DATE:	NO.	BY:	DATE:	S-14
1			3			TOTAL SHEETS
2			4			42

DRAWN BY : TWL DATE : 06/2018
CHECKED BY : MKO DATE : 07/2018
DESIGN ENGINEER OF RECORD: RLB DATE : 06/2021

DOCUMENT NOT CONSIDERED FINAL UNLESS ALL SIGNATURES COMPLETED

6/4/2021
X:\P\1030036006 Div 3 B-4590\Design\Structures\Working DGN\FinalPlans\401_027_B4590_SMU_G2_S-14_640029.dgn
CuanyN

DocuSign Envelope ID: 067A235F-0381-4EA9-9E6C-859425BCECAB

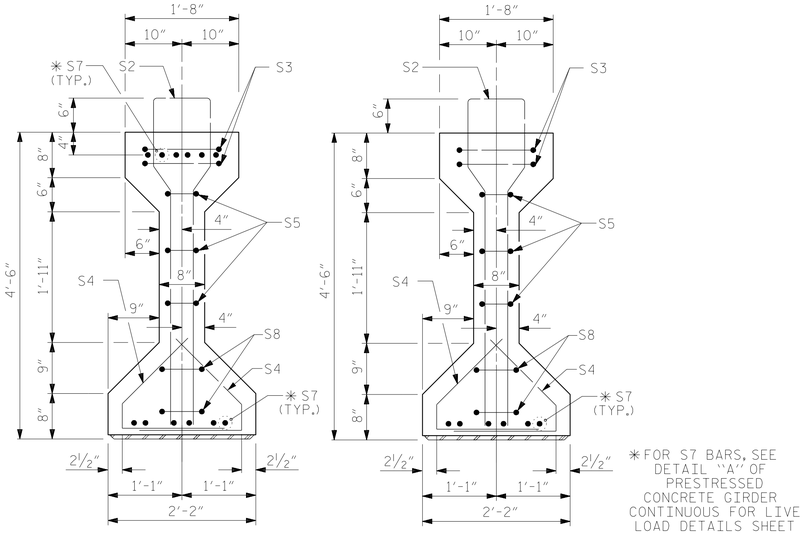

SECTION A-A

SECTION B-B

✳FOR S7 BARS, SEE DETAIL "A" OF PRESTRESSED CONCRETE GIRDER CONTINUOUS FOR LIVE LOAD DETAILS SHEET

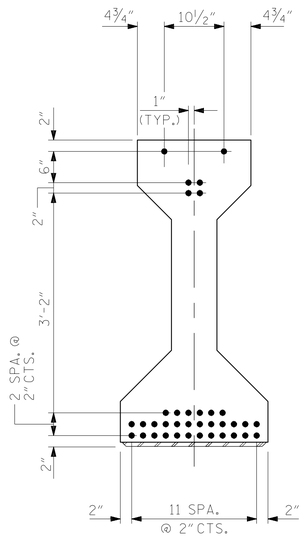

AT ℄ OF GIRDER

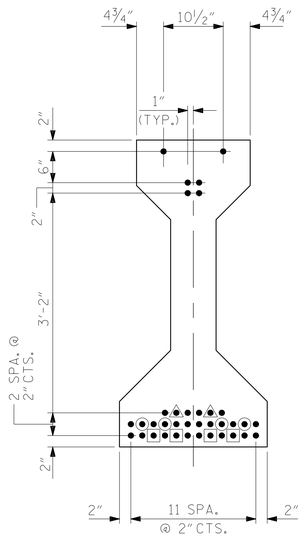

AT END OF GIRDER

DEBONDING LEGEND

- FULLY BONDED STRANDS
- STRANDS DEBONDED FOR 4'-0" FROM END OF GIRDER
- STRANDS DEBONDED FOR 6'-0" FROM END OF GIRDER
- STRANDS DEBONDED FOR 8'-0" FROM END OF GIRDER

0.6" Ø LOW RELAXATION STRAND LAYOUT

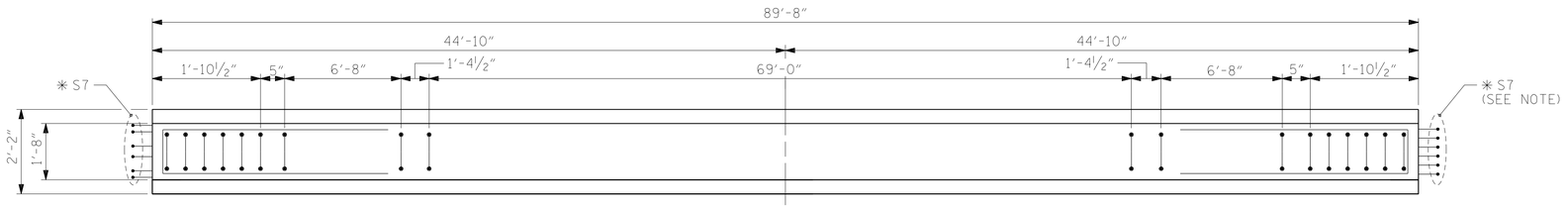

PLAN OF GIRDER

NOTE: S7 BARS IN BOTTOM BULB NOT SHOWN FOR CLARITY

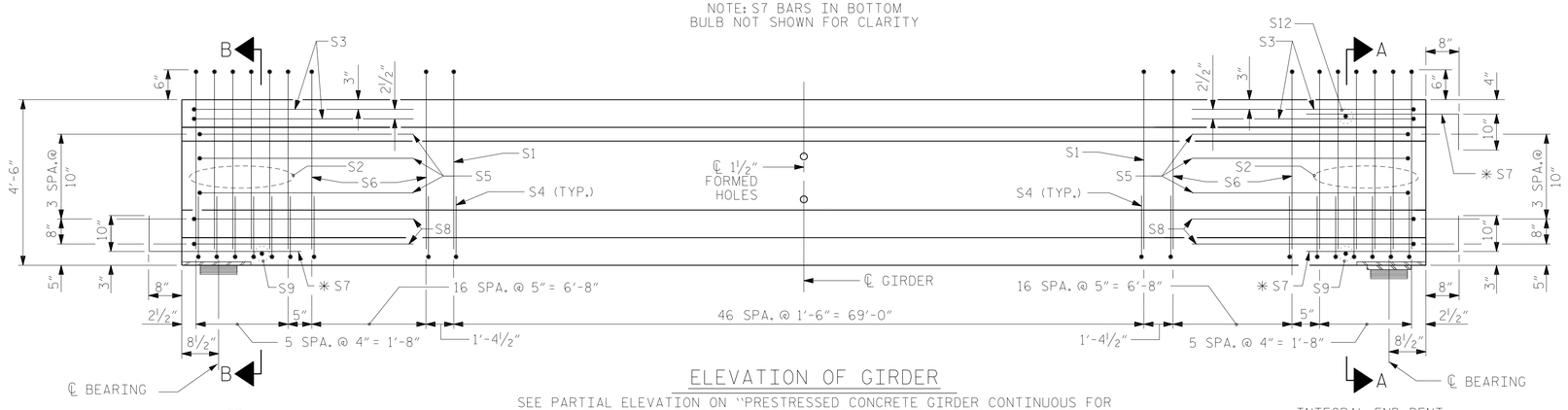

ELEVATION OF GIRDER

SEE PARTIAL ELEVATION ON "PRESTRESSED CONCRETE GIRDER CONTINUOUS FOR LIVE LOAD" SHEET FOR ADDITIONAL "S" BARS AROUND FORMED HOLES

0.6" Ø L. R. GRADE 270 STRANDS

AREA (SQUARE INCHES)	ULTIMATE STRENGTH (LBS. PER STRAND)	APPLIED PRESTRESS (LBS. PER STRAND)
0.217	58,600	43,950

REINFORCING STEEL FOR ONE GIRDER

BAR	NUMBER	SIZE	TYPE	LENGTH	WEIGHT
S1	47	#4	1	10'-8"	335
S2	12	#6	1	10'-8"	192
S3	4	#4	2	9'-1"	24
S4	186	#4	3	3'-5"	425
S5	6	#4	2	8'-5"	34
S6	34	#5	1	10'-8"	378
✳ S7	18	#5	STR	3'-8"	69
S8	4	#4	2	8'-7"	23
S9	2	#3	STR	1'-10"	1
✳✳ S10	2	#5	2	8'-8"	18
✳✳ S11	5	#4	STR	7'-0"	23
S12	1	#3	STR	1'-4"	1

NOTE: ✳ S7 BARS SHALL BE BENT BEFORE SHIPMENT. HEAT BENDING SHALL NOT BE ALLOWED.
✳✳ FOR PLACEMENT OF S10 AND S11 BARS SEE "PRESTRESSED CONCRETE GIRDER CONTINUOUS FOR LIVE LOAD DETAILS" SHEET.

BAR TYPES

ALL BAR DIMENSIONS ARE OUT-TO-OUT

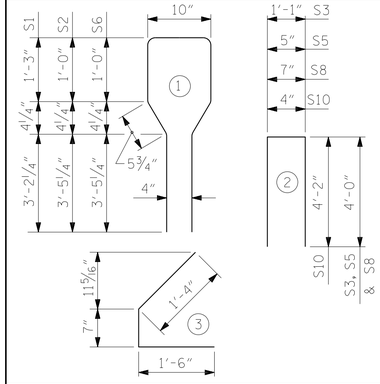

QUANTITIES FOR ONE GIRDER

	REINFORCING STEEL	7500 PSI CONCRETE	0.6" Ø L. R. STRANDS
	LB.	C.Y.	No.
	1523	18.2	36

GIRDERS REQUIRED

NUMBER	LENGTH	TOTAL LENGTH
5	89'-8"	448'-4"

PROJECT NO. B-4590

NEW HANOVER COUNTY

STATION: 18+44.50 -L-

SHEET 3 OF 4

NORTH CAROLINA PROFESSIONAL SEAL 18442 ENGINEER RICHARD LEON BOLLINGER JR.
6/6/2021

RS&H

RS&H Architects-Engineers-Planners, Inc.
8521 Six Forks Road, Suite 400
Raleigh, NC 27615
919-926-4100 FAX 919-846-9080
www.rsandh.com
North Carolina License Nos. 50073 * F-0493 * C-28

STATE OF NORTH CAROLINA
DEPARTMENT OF TRANSPORTATION
RALEIGH

SUPERSTRUCTURE

AASHTO TYPE IV PRESTRESSED CONCRETE GIRDER CONTINUOUS FOR LIVE LOAD SPAN C

REVISIONS						SHEET NO.
NO.	BY:	DATE:	NO.	BY:	DATE:	S-15
1			3			TOTAL SHEETS
2			4			42

DRAWN BY : TWL DATE : 06/2018
CHECKED BY : MKO DATE : 07/2018
DESIGN ENGINEER OF RECORD: RLB DATE : 06/2021

DOCUMENT NOT CONSIDERED FINAL UNLESS ALL SIGNATURES COMPLETED

6/4/2021
X:\P\1030036006 Div 3 B-4590\Design\Structures\Working DGN\FinalPlans\401_029_B4590_SMU_G3_S-15_640029.dgn
CuanyN

DocuSign Envelope ID: 067A235F-0381-4EA9-9E6C-859425BCECAB

NOTES

ALL PRESTRESSING STRANDS SHALL BE 7-WIRE LOW-RELAXATION GRADE 270 STRANDS AND SHALL CONFORM TO AASHTO M203 EXCEPT FOR SAMPLING REQUIREMENTS WHICH SHALL BE IN ACCORDANCE WITH THE STANDARD SPECIFICATIONS.

ALL REINFORCING STEEL SHALL BE GRADE 60.

EMBEDDED PLATE "B-1" SHALL BE GALVANIZED IN ACCORDANCE WITH THE STANDARD SPECIFICATIONS.

ANCHOR STUDS SHALL CONFORM TO AASHTO M169 GRADES 1010 THROUGH 1020 OR APPROVED EQUAL, AND SHALL MEET THE TYPE "B" REQUIREMENTS OF SUBSECTION 7.3 OF THE ANSI/AASHTO/AWS D1.5 BRIDGE WELDING CODE.

AT ENDS OF GIRDERS TO BE EMBEDDED IN CONCRETE DIAPHRAGMS OR END WALLS, PRESTRESSING STRANDS MAY EXTEND A MAXIMUM OF 2" BEYOND THE GIRDER ENDS. OTHERWISE, PRESTRESSING STRANDS SHALL BE CUT FLUSH WITH THE GIRDER ENDS.

THE TRANSFER OF LOAD FROM THE ANCHORAGES TO THE GIRDER SHALL BE DONE WHEN CONCRETE HAS REACHED A COMPRESSIVE STRENGTH OF NOT LESS THAN 6,000 PSI.

DEPENDING ON THE TYPE OF SYSTEM USED TO SUPPORT THE DECK SLAB FORMS, PRESET ANCHORS MAY BE NECESSARY IN THE PRESTRESSED CONCRETE GIRDER.

THE TOP SURFACE OF THE GIRDER, EXCLUDING THE OUTSIDE 4", SHALL BE RAKED TO A DEPTH OF 1/4".

WHEN DRAPED STRANDS ARE DETAILED, THE LONGITUDINAL LOCATION OF THE HOLD DOWN DEVICES SHALL BE WITHIN 6" OF THE LOCATION SHOWN AND THE CENTER OF GRAVITY OF THE GROUP OF DRAPED STRANDS SHALL BE LOCATED WITHIN 1/2" OF THE THEORETICAL LOCATION SHOWN.

PRESTRESSED CONCRETE GIRDERS ARE DESIGNED FOR 0 PSI TENSION IN THE PRECOMPRESSED TENSILE ZONE UNDER ALL LOADING CONDITIONS.

PRESTRESSED CONCRETE GIRDERS SHALL CONTAIN CALCIUM NITRITE CORROSION INHIBITOR IN ACCORDANCE WITH THE STANDARD SPECIFICATIONS.

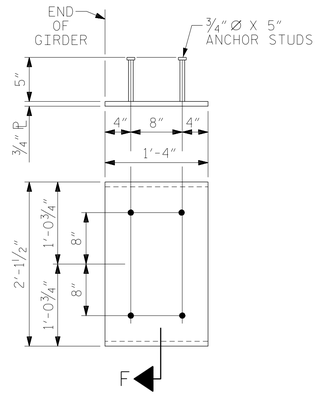

EMBEDDED PLATE "B-1" DETAILS FOR AASHTO TYPE IV GIRDER

(2 REQ'D PER GIRDER)

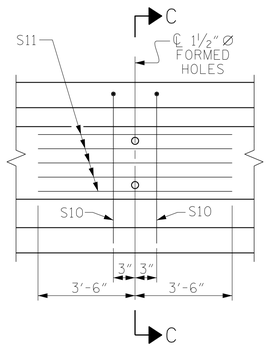

PARTIAL ELEVATION

SHOWING INTERMEDIATE DIAPHRAGM REINFORCING STEEL

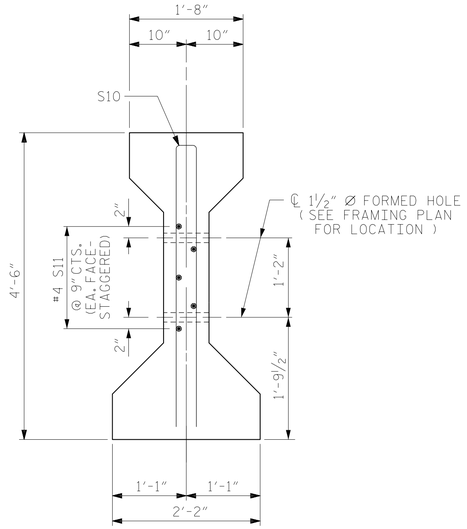

SECTION C-C

(S1 BARS NOT SHOWN)

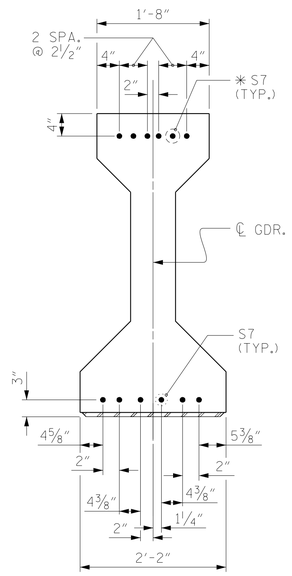

DETAIL "A"

* TOP S7 BARS ONLY AT INTEGRAL END BENTS

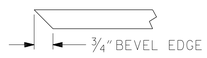

SECTION "F"

(SEE NOTES)

PROJECT NO. B-4590

NEW HANOVER COUNTY

STATION: 18+44.50 -L-

SHEET 4 OF 4

ASSEMBLED BY : TWL	DATE : 06/2018
CHECKED BY : MKO	DATE : 07/2018
DRAWN BY : ELR 11/91	REV. 1/15 MAA/TMG
CHECKED BY : GRP 11/91	REV. 2/15 MAA/TMG
	REV. 12/17 MAA/THC

NORTH CAROLINA PROFESSIONAL SEAL 18422 ENGINEER RICHARD LEON BOLLINGER JR

6/6/2021

RS&H

RS&H Architects-Engineers-Planners, Inc.
8521 Six Forks Road, Suite 400
Raleigh, NC 27615
919-926-4100 FAX 919-846-9080
www.rsandh.com
North Carolina License Nos. 50073 * F-0493 * C-28

DOCUMENT NOT CONSIDERED FINAL UNLESS ALL SIGNATURES COMPLETED

STATE OF NORTH CAROLINA
DEPARTMENT OF TRANSPORTATION
RALEIGH

STANDARD

PRESTRESSED CONCRETE GIRDER CONTINUOUS FOR LIVE LOAD DETAILS

REVISIONS						SHEET NO.
NO.	BY:	DATE:	NO.	BY:	DATE:	S-16
1			3			TOTAL SHEETS
2			4			42

STD. NO. PCG9

6/4/2021
X:\P\1030036006 Div 3 B-4590\Design\Structures\Working DGN\FinalPlans\401_031_B4590_SMU_G4_S-16_640029.dgn
CuanyN

DocuSign Envelope ID: 067A235F-0381-4EA9-9E6C-859425BCECAB

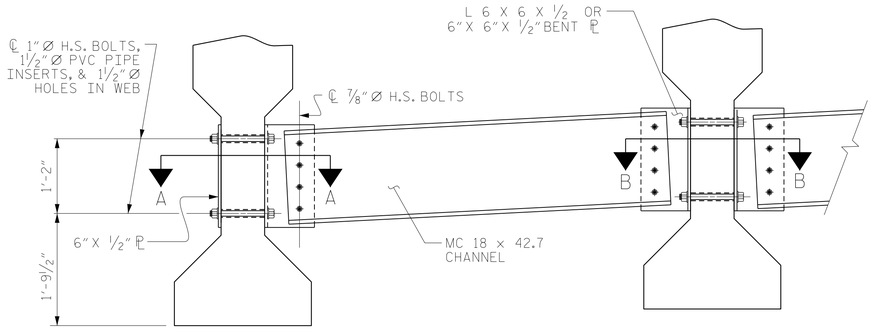

PART SECTION AT INTERMEDIATE DIAPHRAGM

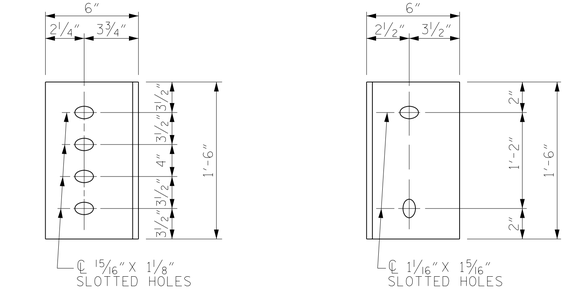

CONNECTION PLATE DETAILS

STRUCTURAL STEEL NOTES

ALL INTERMEDIATE DIAPHRAGM STEEL AND CONNECTOR PLATES SHALL BE AASHTO M270 GRADE 50 OR APPROVED EQUAL.

TENSION ON THE ASTM A325 BOLTS THROUGH THE CHANNEL MEMBER SHALL BE CALIBRATED USING DIRECT TENSION INDICATOR WASHERS IN ACCORDANCE WITH THE STANDARD SPECIFICATIONS.

TENSION ON THE ASTM A449 BOLTS THROUGH THE GIRDER WEB SHALL BE SNUG TIGHTENED FOLLOWED BY AN ADDITIONAL ¼ TURN.

THE PLATES, BENT PLATES, CHANNELS, AND ANGLES SHALL BE METALLIZED IN ACCORDANCE WITH THE STANDARD SPECIFICATIONS AND THE SPECIAL PROVISION FOR THERMAL SPRAYED COATINGS (METALLIZATION).

GALVANIZE THE HIGH STRENGTH BOLTS, NUTS, WASHERS, AND DIRECT TENSION INDICATORS IN ACCORDANCE WITH THE STANDARD SPECIFICATIONS.

FOR METALLIZATION, APPLY AN 8 MIL THICK 99.50 PERCENT 1350 ALUMINUM (W-A1-1350) THERMAL SPRAY COATING WITH A 0.5 MIL THICK SEAL COAT TO ALL STEEL DIAPHRAGM SURFACES IN ACCORDANCE WITH THE THERMAL SPRAYED COATINGS (METALLIZATION) SPECIAL PROVISION AND SECTION 442 OF THE STANDARD SPECIFICATIONS.

APPLY 1 COAT EACH OF 1080-12 BROWN AND 1080-12 GRAY PAINT ON THE EDGES AND THE WEB FACE OF THE CONNECTOR PLATE WHICH COMES IN CONTACT WITH THE CONCRETE GIRDER IN ACCORDANCE WITH SECTION 442 OF THE STANDARD SPECIFICATIONS.

USE AN ASTM F436 HARDENED WASHER WITH STANDARD AND SLOTTED HOLES UNDER EACH BOLT HEAD AND NUT.

FOR BOLTS THROUGH THE GIRDER WEB, PROVIDE SUFFICIENT LENGTH OF THREADS ON ALL BOLTS TO ACCOMMODATE WASHERS AND THE THICKNESS OF CONNECTING MEMBER PLUS AT LEAST ¼" PROJECTION BEYOND THE NUT.

INTERMEDIATE DIAPHRAGM ASSEMBLY SHALL COMPLY WITH SECTION 1072 OF THE STANDARD SPECIFICATIONS.

SUBMIT TWO SETS OF WORKING DRAWINGS FOR THE INTERMEDIATE DIAPHRAGM ASSEMBLY FOR REVIEW, COMMENTS AND ACCEPTANCE. AFTER REVIEW, COMMENTS, AND ACCEPTANCE, SUBMIT SEVEN SETS FOR DISTRIBUTION.

IN THE EXTERIOR BAYS, PLACE TEMPORARY STRUTS BETWEEN PRESTRESSED GIRDERS ADJACENT TO THE STEEL DIAPHRAGMS. STRUTS SHALL REMAIN IN PLACE 3 DAYS AFTER CONCRETE IS PLACED.

THE COST OF THE STEEL DIAPHRAGMS AND ASSEMBLIES SHALL BE INCLUDED IN THE UNIT PRICE BID FOR PRESTRESSED CONCRETE GIRDERS.

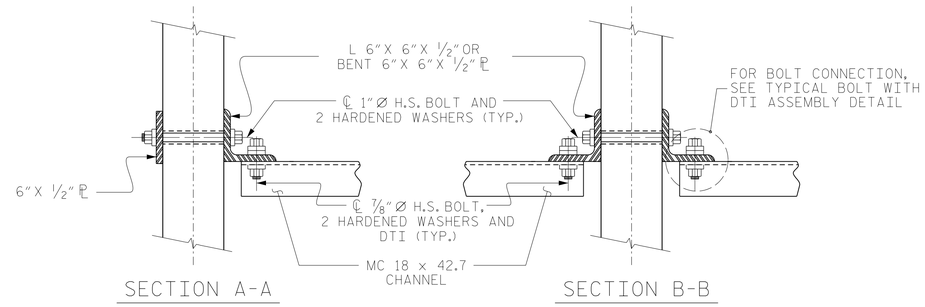

CONNECTION DETAILS

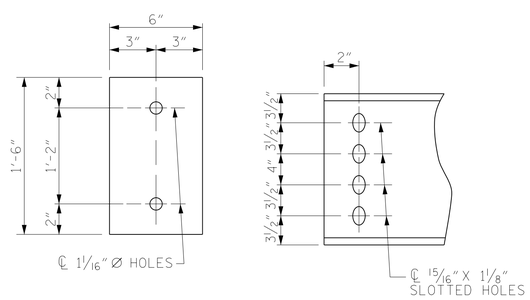

PLATE DETAILS CHANNEL END

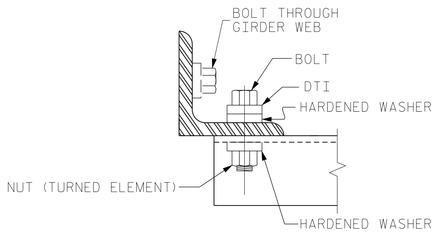

BOLT WITH DTI ASSEMBLY DETAIL

PROJECT NO. B-4590

NEW HANOVER COUNTY

STATION: 18+44.50 -L-

ASSEMBLED BY : TWL		DATE : 06/2018	
CHECKED BY : MKO		DATE : 07/2018	
DRAWN BY : TLA 6/05	REV. 5/1/06RRR	KMM/GM	
CHECKED BY : VC 6/05	REV. 10/1/11	MAA/GM	
	REV. 12/17	MAA/THC	

6/4/2021
X:\P\1030036006 Div 3 B-4590\Design\Structures\Working DGN\FinalPlans\401_033_B4590_SMU_DIA_S-17_640029.dgn
CuanyN

NORTH CAROLINA PROFESSIONAL ENGINEER SEAL 18442 RICHARD LEON BOLTINGER II
6/6/2021

RS&H

RS&H Architects-Engineers-Planners, Inc.
8521 Six Forks Road, Suite 400
Raleigh, NC 27615
919-926-4100 FAX 919-846-9080
www.rsandh.com
North Carolina License Nos. 50073 * F-0493 * C-28

DOCUMENT NOT CONSIDERED FINAL UNLESS ALL SIGNATURES COMPLETED

STATE OF NORTH CAROLINA
DEPARTMENT OF TRANSPORTATION
RALEIGH

STANDARD

INTERMEDIATE STEEL DIAPHRAGMS FOR TYPE IV PRESTRESSED CONCRETE GIRDERS

REVISIONS						SHEET NO.
NO.	BY:	DATE:	NO.	BY:	DATE:	S-17
1			3			TOTAL SHEETS
2			4			42

STD. NO. PCG10

DocuSign Envelope ID: 067A235F-0381-4EA9-9E6C-859425BCECAB

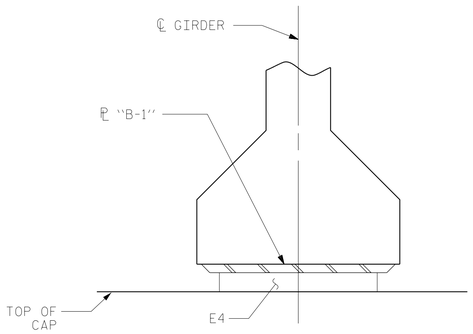

INTEGRAL

SECTION D-D

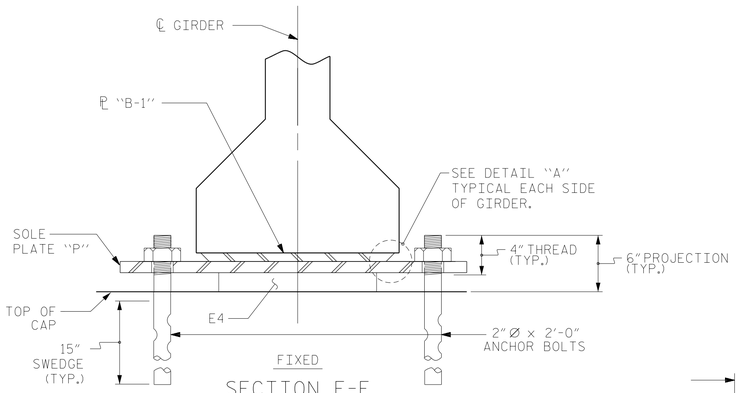

FIXED

SECTION E-E

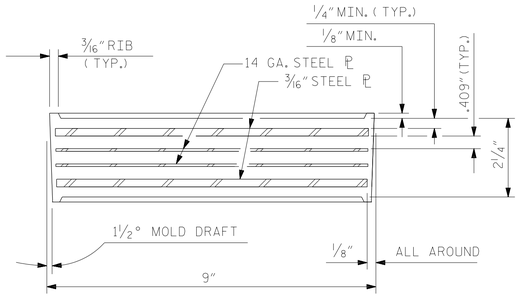

TYPICAL SECTION OF ELASTOMERIC BEARINGS

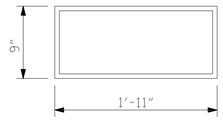

E4 (30 REQ'D)

PLAN VIEW OF ELASTOMERIC BEARING TYPE V

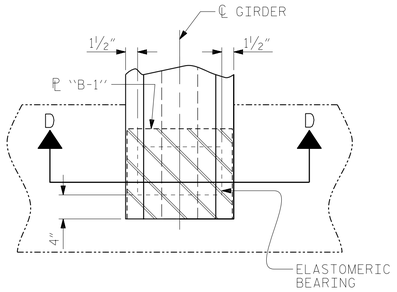

TYPICAL PLAN AT END BENTS

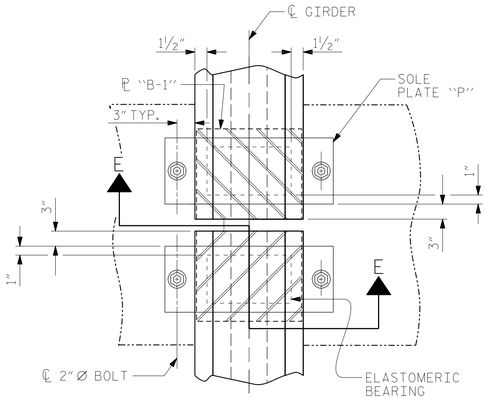

TYPICAL PLAN AT INTERIOR BENTS

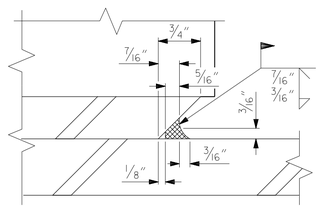

DETAIL "A"

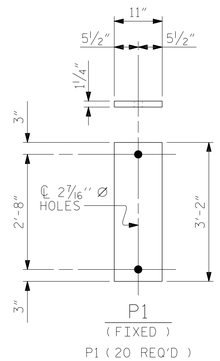

P1 (20 REQ'D)

SOLE PLATE DETAILS ("P")

MAXIMUM ALLOWABLE SERVICE LOADS	
D.L.+L.L.(NO IMPACT)	
TYPE V	365 k

NOTES

AT ALL FIXED POINTS OF SUPPORT, NUTS FOR ANCHOR BOLTS ARE TO BE TIGHTENED FINGER TIGHT AND THEN BACKED OFF 1/2 TURN. THE THREAD OF THE NUT AND BOLT SHALL THEN BE BURRED WITH A SHARP POINTED TOOL.

STEEL SOLE PLATES, ANCHOR BOLTS, NUTS, AND WASHERS SHALL BE GALVANIZED IN ACCORDANCE WITH THE STANDARD SPECIFICATIONS.

PRIOR TO WELDING, GRIND THE GALVANIZED SURFACE OF THE PORTION OF THE EMBEDDED PLATE AND SOLE PLATE THAT ARE TO BE WELDED. AFTER WELDING, DAMAGED GALVANIZED SURFACES SHALL BE REPAIRED IN ACCORDANCE WITH THE STANDARD SPECIFICATIONS.

WHEN WELDING THE SOLE PLATE TO THE EMBEDDED PLATE IN THE GIRDER, USE TEMPERATURE INDICATING WAX PENS, OR OTHER SUITABLE MEANS, TO ENSURE THAT THE TEMPERATURE OF THE SOLE PLATE DOES NOT EXCEED 300°F. TEMPERATURES ABOVE THIS MAY DAMAGE THE ELASTOMER.

SOLE PLATE "P", BOLTS, NUTS, AND WASHERS SHALL BE INCLUDED IN THE PAY ITEM FOR PRESTRESSED CONCRETE GIRDERS.

ANCHOR BOLTS SHALL MEET THE REQUIREMENTS OF ASTM A449. NUTS SHALL MEET THE REQUIREMENTS OF AASHTO M291-DH OR AASHTO M292-2H. WASHERS SHALL MEET THE REQUIREMENTS OF AASHTO M293. NO SHOP DRAWINGS ARE REQUIRED FOR ANCHOR BOLTS, NUTS AND WASHERS. SHOP INSPECTION IS REQUIRED.

ALL SURFACES OF BEARING PLATES SHALL BE SMOOTH AND STRAIGHT.

THE ELASTOMER IN THE STEEL REINFORCED BEARINGS SHALL HAVE A SHEAR MODULUS OF 0.160 KSI, IN ACCORDANCE WITH AASHTO M251.

FOR STEEL REINFORCED ELASTOMERIC BEARINGS, SEE SPECIAL PROVISIONS.

ALL BEARING PLATES SHALL BE AASHTO M270 GRADE 36 OR GRADE 50.

PROJECT NO. B-4590
NEW HANOVER COUNTY
STATION: 18+44.50 -L-

DRAWN BY : PDS DATE : 06/2018
CHECKED BY : MKO DATE : 07/2018
DESIGN ENGINEER OF RECORD: RLB DATE : 06/2021

6/4/2021
X:\P\1030036006 Div 3 B-4590\Design\Structures\Working DGN\FinalPlans\401_035_B4590_SMU_BG_S-18_640029.dgn
CuonyN

DOCUMENT NOT CONSIDERED FINAL UNLESS ALL SIGNATURES COMPLETED

NORTH CAROLINA PROFESSIONAL ENGINEER SEAL 18442 RICHARD LEON BOLLINGER III
6/6/2021

RS&H
RS&H Architects-Engineers-Planners, Inc.
8521 Six Forks Road, Suite 400
Raleigh, NC 27615
919-926-4100 FAX 919-846-9080
www.rsandh.com
North Carolina License Nos. 50073 * F-0493 * C-28

STATE OF NORTH CAROLINA
DEPARTMENT OF TRANSPORTATION
RALEIGH

ELASTOMERIC BEARING DETAILS

REVISIONS						SHEET NO.
NO.	BY:	DATE:	NO.	BY:	DATE:	S-18
1			3			TOTAL SHEETS
2			4			42

DocuSign Envelope ID: 067A235F-0381-4EA9-9E6C-859425BCECAB

DEAD LOAD DEFLECTION TABLE FOR GIRDERS

0.6" Ø LOW RELAXATION	SPAN A										
	GIRDERS 1 AND 5 (EXTERIOR)										
TENTH POINTS	0	0.1	0.2	0.3	0.4	0.5	0.6	0.7	0.8	0.9	0
CAMBER (GIRDER ALONE IN PLACE) ↑	0.000	0.016	0.030	0.042	0.049	0.051	0.049	0.042	0.030	0.016	0.000
* DEFLECTION DUE TO SUPERIMPOSED D.L. ↓	0.000	0.009	0.019	0.026	0.031	0.032	0.031	0.026	0.019	0.010	0.000
FINAL CAMBER ↑	0"	1/16"	1/8"	3/16"	1/4"	1/4"	1/4"	3/16"	1/8"	1/16"	0"
	GIRDERS 2, 3, AND 4 (INTERIOR)										
TENTH POINTS	0	0.1	0.2	0.3	0.4	0.5	0.6	0.7	0.8	0.9	0
CAMBER (GIRDER ALONE IN PLACE) ↑	0.000	0.016	0.030	0.042	0.049	0.051	0.049	0.042	0.030	0.016	0.000
* DEFLECTION DUE TO SUPERIMPOSED D.L. ↓	0.000	0.010	0.020	0.028	0.033	0.035	0.033	0.028	0.020	0.010	0.000
FINAL CAMBER ↑	0"	1/16"	1/8"	3/16"	3/16"	3/16"	3/16"	3/16"	1/8"	1/16"	0"

0.6" Ø LOW RELAXATION	SPAN B										
	GIRDERS 1 AND 5 (EXTERIOR)										
TENTH POINTS	0	0.1	0.2	0.3	0.4	0.5	0.6	0.7	0.8	0.9	0
CAMBER (GIRDER ALONE IN PLACE) ↑	0.000	0.077	0.145	0.199	0.233	0.244	0.233	0.199	0.145	0.077	0.000
* DEFLECTION DUE TO SUPERIMPOSED D.L. ↓	0.000	0.047	0.090	0.124	0.144	0.151	0.144	0.124	0.090	0.047	0.000
FINAL CAMBER ↑	0"	3/8"	11/16"	7/8"	1 1/16"	1 1/8"	1 1/16"	7/8"	11/16"	3/8"	0"
	GIRDERS 2, 3, AND 4 (INTERIOR)										
TENTH POINTS	0	0.1	0.2	0.3	0.4	0.5	0.6	0.7	0.8	0.9	0
CAMBER (GIRDER ALONE IN PLACE) ↑	0.000	0.077	0.145	0.199	0.233	0.244	0.233	0.199	0.145	0.077	0.000
* DEFLECTION DUE TO SUPERIMPOSED D.L. ↓	0.000	0.050	0.096	0.132	0.154	0.162	0.154	0.132	0.096	0.050	0.000
FINAL CAMBER ↑	0"	5/16"	9/16"	13/16"	15/16"	1"	15/16"	13/16"	9/16"	5/16"	0"

0.6" Ø LOW RELAXATION	SPAN C										
	GIRDERS 1 AND 5 (EXTERIOR)										
TENTH POINTS	0	0.1	0.2	0.3	0.4	0.5	0.6	0.7	0.8	0.9	0
CAMBER (GIRDER ALONE IN PLACE) ↑	0.000	0.044	0.083	0.114	0.134	0.140	0.134	0.114	0.083	0.044	0.000
* DEFLECTION DUE TO SUPERIMPOSED D.L. ↓	0.000	0.029	0.056	0.077	0.090	0.095	0.090	0.076	0.055	0.028	0.000
FINAL CAMBER ↑	0"	3/16"	5/16"	7/16"	1/2"	9/16"	1/2"	7/16"	5/16"	3/16"	0"
	GIRDERS 2, 3, AND 4 (INTERIOR)										
TENTH POINTS	0	0.1	0.2	0.3	0.4	0.5	0.6	0.7	0.8	0.9	0
CAMBER (GIRDER ALONE IN PLACE) ↑	0.000	0.044	0.083	0.114	0.134	0.140	0.134	0.114	0.083	0.044	0.000
* DEFLECTION DUE TO SUPERIMPOSED D.L. ↓	0.000	0.031	0.059	0.082	0.097	0.102	0.096	0.082	0.059	0.030	0.000
FINAL CAMBER ↑	0"	3/16"	5/16"	3/8"	7/16"	7/16"	7/16"	3/8"	5/16"	3/16"	0"

* INCLUDES FUTURE WEARING SURFACE IN SUPERIMPOSED DEAD LOAD.
ALL VALUES ARE SHOWN IN FEET (DECIMAL FORM), EXCEPT "FINAL CAMBER", WHICH IS GIVEN IN INCHES (FRACTION FORM).

PROJECT NO. B-4590
NEW HANOVER COUNTY
STATION: 18+44.50 -L-

NORTH CAROLINA PROFESSIONAL ENGINEER SEAL 036475 RICHARD LEON BOLLINGER JR
6/6/2021

RS&H Architects-Engineers-Planners, Inc.
8521 Six Forks Road, Suite 400
Raleigh, NC 27615
919-926-4100 FAX 919-846-9080
www.rsandh.com
North Carolina License Nos. 50073 * F-0493 * C-28

STATE OF NORTH CAROLINA
DEPARTMENT OF TRANSPORTATION
RALEIGH

SUPERSTRUCTURE

DEAD LOAD DEFLECTIONS

REVISIONS						SHEET NO.
NO.	BY:	DATE:	NO.	BY:	DATE:	S-19
1			3			TOTAL SHEETS
2			4			42

DRAWN BY : MRA DATE : 06/2018
CHECKED BY : MKO DATE : 07/2018
DESIGN ENGINEER OF RECORD: RLB DATE : 06/2021

DOCUMENT NOT CONSIDERED FINAL UNLESS ALL SIGNATURES COMPLETED

6/4/2021
\\rsandh.com\files\Transportation\P\1030036006 Div 3 B-4590\Design\Structures\Working DGN\FinalPlans\401_037_B4590_SMU_DL_S-19_640029.dgn
CuanyN

DocuSign Envelope ID: 067A235F-0381-4EA9-9E6C-859425BCECAB

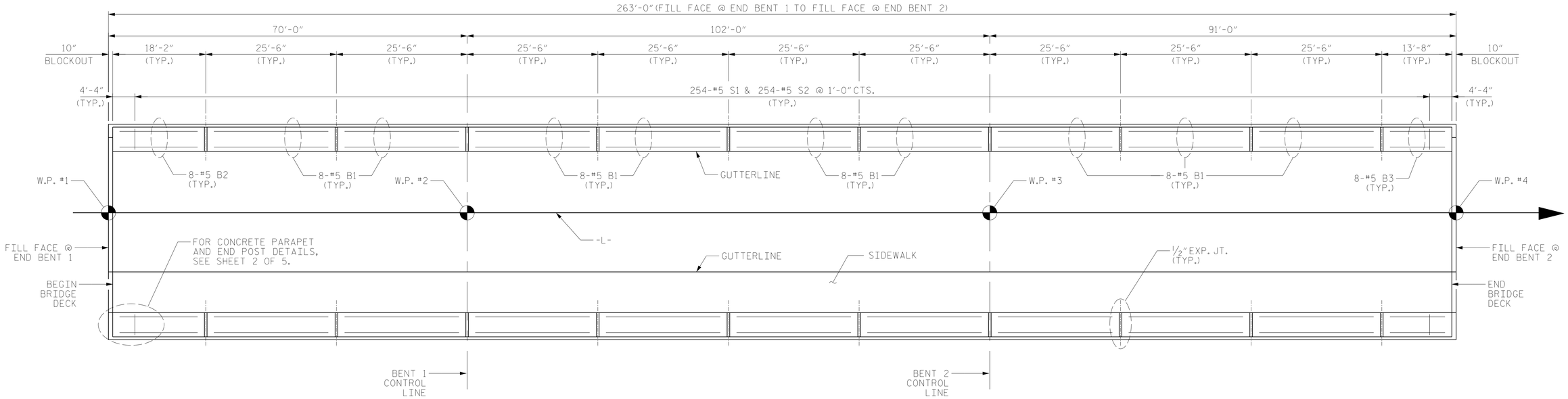

PLAN OF CONCRETE PARAPET

PROJECT NO. B-4590

NEW HANOVER COUNTY

STATION: 18+44.50 -L-

SHEET 1 OF 5

NORTH CAROLINA PROFESSIONAL SEAL 18442 ENGINEER RICHARD LEON BOLLINGER JR.

6/6/2021

RS&H

RS&H Architects-Engineers-Planners, Inc.
8521 Six Forks Road, Suite 400
Raleigh, NC 27615
919-926-4100 FAX 919-846-9080
www.rsandh.com
North Carolina License Nos. 50073 * F-0493 * C-28

STATE OF NORTH CAROLINA
DEPARTMENT OF TRANSPORTATION
RALEIGH

SUPERSTRUCTURE

CONCRETE PARAPET
SPANS A, B, & C

REVISIONS						SHEET NO.
NO.	BY:	DATE:	NO.	BY:	DATE:	S-20
1			3			TOTAL SHEETS
2			4			42

DRAWN BY : TWL DATE : 06/2018
CHECKED BY : MRA DATE : 07/2018
DESIGN ENGINEER OF RECORD: RLB DATE : 06/2021

DOCUMENT NOT CONSIDERED FINAL UNLESS ALL SIGNATURES COMPLETED

6/4/2021
X:\P\1030036006 Div 3 B-4590\Design\Structures\Working DGN\FinalPlans\401_039_B4590_SMU_2MR_S-20_640029.dgn
CuanyN

DocuSign Envelope ID: 067A235F-0381-4EA9-9E6C-859425BCECAB

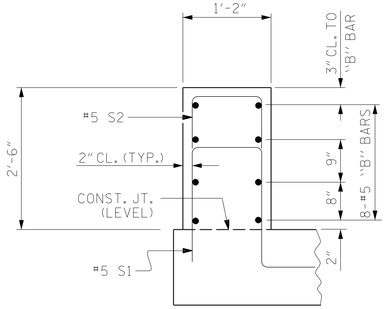

SECTION THROUGH PARAPET

BAR TYPES

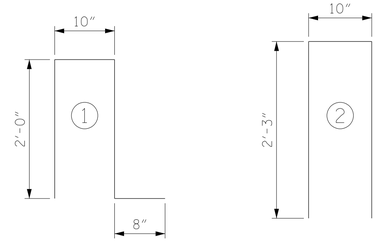

ALL BAR DIMENSIONS ARE OUT TO OUT

BILL OF MATERIAL

FOR CONCRETE PARAPET

BAR	NO.	SIZE	TYPE	LENGTH	WEIGHT
✳B1	144	#5	STR	25'-0"	3,755
✳B2	16	#5	STR	17'-8"	295
✳B3	16	#5	STR	13'-2"	220
✳E1	8	#7	STR	2'-6"	41
✳E2	8	#7	STR	3'-0"	49
✳E3	8	#7	STR	3'-6"	57
✳E4	8	#7	STR	4'-0"	65
✳E5	8	#7	STR	4'-4"	71
✳F1	8	#6	STR	1'-10"	22
✳F2	8	#6	STR	3'-0"	36
✳F3	8	#6	STR	3'-6"	42
✳S1	508	#5	1	5'-6"	2,914
✳S2	508	#5	2	5'-4"	2,826
✳S3	32	#5	STR	3'-0"	100

✳EPOXY COATED REINFORCING STEEL	10,493 LBS.
CLASS AA CONCRETE	57.3 C.Y.
CONCRETE PARAPET	522.67 L.F.

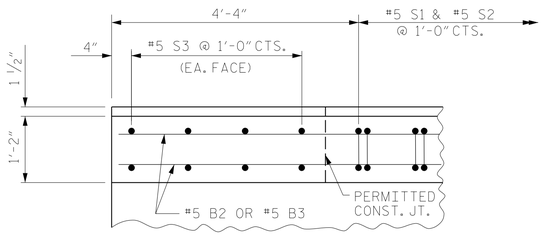

PLAN OF PARAPET

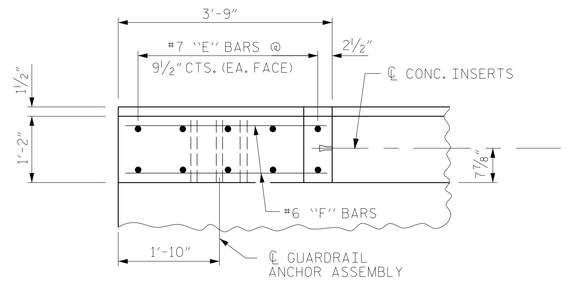

PLAN OF END POST

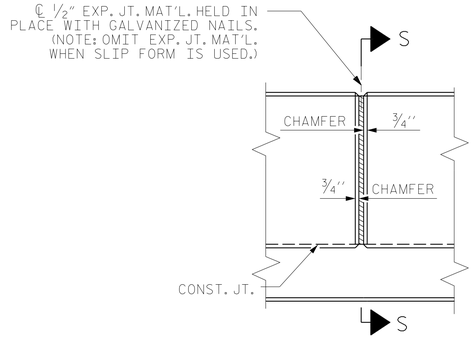

ELEVATION AT EXPANSION JOINTS

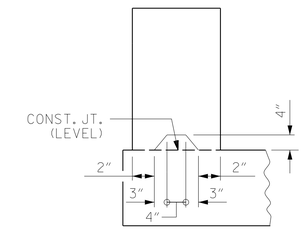

SECTION S-S

AT DAM IN OPEN JOINT
(THIS IS TO BE USED ONLY WHEN SLIP FORM IS USED)

PARAPET DETAILS

NOTES:

THE CONCRETE PARAPET IN EACH SPAN SHALL NOT BE CAST UNTIL ALL SLAB CONCRETE IN THAT SPAN HAS BEEN CAST AND HAS REACHED A MINIMUM COMPRESSION STRENGTH OF 3,000 PSI.

ALL REINFORCING STEEL IN THE CONCRETE PARAPET SHALL BE EPOXY COATED.

SEE "RAIL POST SPACINGS AND END OF RAIL DETAILS" SHEET FOR CONCRETE INSERT DETAILS. SEE "GUARDRAIL ANCHORAGE DETAILS FOR METAL RAILS" SHEET FOR GUARDRAIL ANCHOR ASSEMBLY.

GROOVED CONTRACTION JOINTS, ½" IN DEPTH, SHALL BE TOOLED IN ALL EXPOSED FACES OF THE PARAPET AND IN ACCORDANCE WITH ARTICLE 825-10(B) OF THE STANDARD SPECIFICATIONS. THE CONTRACTION JOINT SHALL BE LOCATED AT EACH THIRD POINT BETWEEN PARAPET EXPASION JOINTS. ONLY ONE CONTRACTION JOINT IS REQUIRED AT MIDPOINT OF PARAPET SEGMENTS LESS THAN 20 FEET IN LENGTH AND NO CONTRACTION JOINTS ARE REQUIRED FOR THOSE SEGMENTS LESS THAN 10 FEET IN LENGTH.

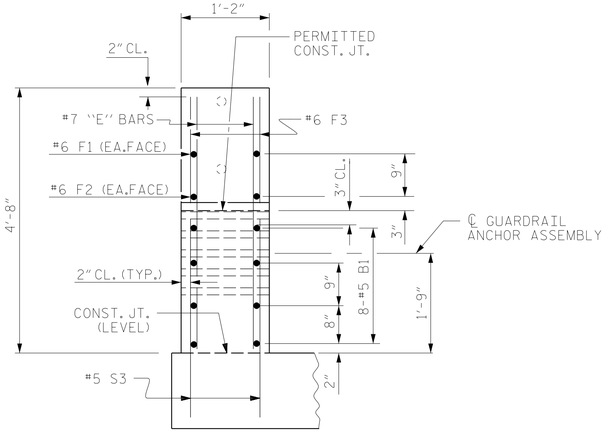

END VIEW

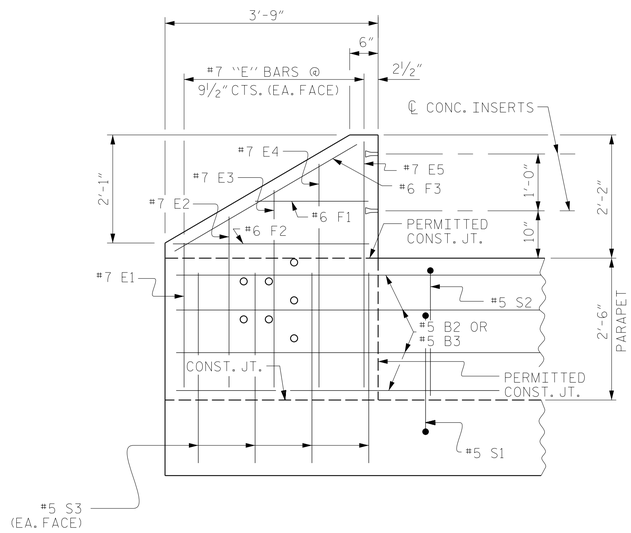

ELEVATION

PARAPET AND END POST FOR TWO BAR METAL RAIL

SIDEWALK ON RIGHT SIDE NOT SHOWN FOR CLARITY

PROJECT NO. B-4590

NEW HANOVER COUNTY

STATION: 18+44.50 -L-

SHEET 2 OF 5

NORTH CAROLINA PROFESSIONAL SEAL 18442 ENGINEER RICHARD LEON BOLLINGER JR
6/6/2021

RS&H

RS&H Architects-Engineers-Planners, Inc.
8521 Six Forks Road, Suite 400
Raleigh, NC 27615
919-926-4100 FAX 919-846-9080
www.rsandh.com
North Carolina License Nos. 50073 ° F-0493 ° C-28

STATE OF NORTH CAROLINA
DEPARTMENT OF TRANSPORTATION
RALEIGH

CONCRETE PARAPET AND END POST DETAILS

REVISIONS						SHEET NO.
NO.	BY:	DATE:	NO.	BY:	DATE:	S-21
1			3			TOTAL SHEETS
2			4			42

DRAWN BY : TWL DATE : 06/2018
CHECKED BY : MRA DATE : 07/2018
DESIGN ENGINEER OF RECORD: RLB DATE : 06/2021

DOCUMENT NOT CONSIDERED FINAL UNLESS ALL SIGNATURES COMPLETED

6/4/2021
X:\P\1030036006 Div 3 B-4590\Design\Structures\Working DGN\FinalPlans\401_041_B4590_SMU_2MR_S-21_640029.dgn
CuanyN

DocuSign Envelope ID: 067A235F-0381-4EA9-9E6C-859425BCECAB

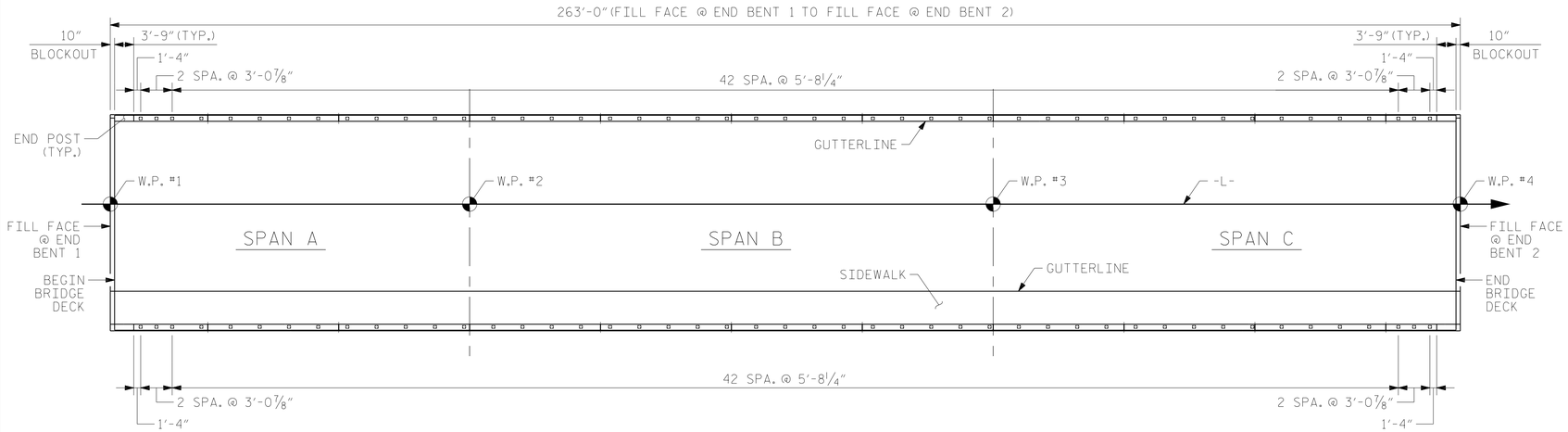

PLAN OF RAIL POST SPACINGS

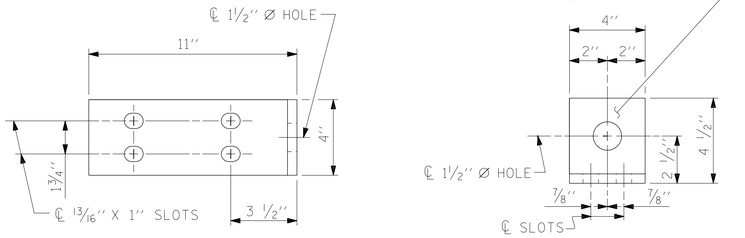

ELEVATION

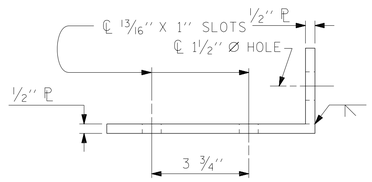

TOP VIEW

END VIEW (FIX AND EXP.)

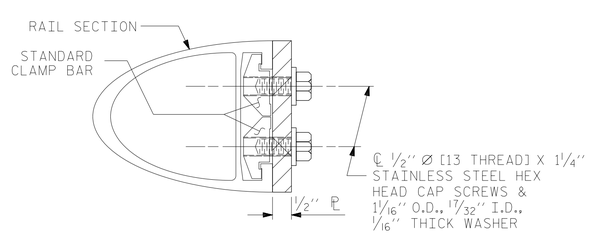

SECTION H-H (FIX)

DETAILS FOR ATTACHING METAL RAIL TO END POST

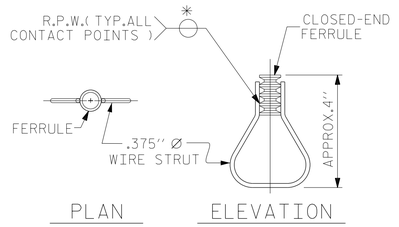

PLAN ELEVATION

STRUCTURAL CONCRETE INSERT

✳ EACH WELDED ATTACHMENT OF WIRE TO FERRULE SHALL DEVELOP THE TENSILE STRENGTH OF THE WIRE.

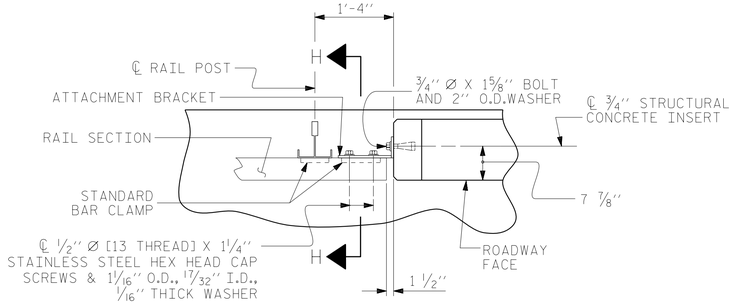

PLAN - RAIL AND END POST

NOTES

STRUCTURAL CONCRETE INSERT

THE STRUCTURAL CONCRETE INSERT ASSEMBLY SHALL CONSIST OF THE FOLLOWING COMPONENTS:

A. FERRULES SHALL BE MADE FROM STEEL MEETING THE REQUIREMENTS OF AASHTO M169, GRADE 12L14 AND SHALL HAVE A MINIMUM LENGTH OF THREADS OF 1½".

B. 1 - ¾" Ø X 1⅝" BOLT WITH WASHER. BOLT SHALL CONFORM TO THE REQUIREMENTS OF ASTM A307. BOLT AND WASHER SHALL BE GALVANIZED. (AT THE CONTRACTOR'S OPTION, STAINLESS STEEL BOLT AND WASHER MAY BE USED AS AN ALTERNATE FOR THE ¾" Ø X 1⅝" GALVANIZED BOLT AND WASHER. THEY SHALL CONFORM TO OR EXCEED THE MECHANICAL REQUIREMENTS OF ASTM A307. THE USE OF THIS ALTERNATE SHALL BE APPROVED BY THE ENGINEER.)

C. WIRE STRUT SHOWN IN THE CONCRETE INSERT ASSEMBLY DETAIL IS THE MINIMUM ALLOWABLE SIZE AND SHALL HAVE A MINIMUM TENSILE STRENGTH OF 100,000 PSI. AS AN OPTION, A 7/16" Ø WIRE STRUT WITHA MINIMUM TENSILE STRENGTH OF 90,000 PSI IS ACCEPTABLE.

NOTES

METAL RAIL TO END POST CONNECTION

THE METAL RAIL TO END POST CONNECTION SHALL CONSIST OF THE FOLLOWING COMPONENTS:

A. ½" PLATES SHALL CONFORM TO AASHTO M270 GRADE 36 AND SHALL BE GALVANIZED AFTER FABRICATION.

B. ¾" STRUCTURAL CONCRETE INSERT SHALL HAVE A WORKING LOAD SHEAR CAPACITY OF 4800 LBS. THE FERRULES SHALL ENGAGE A ¾"Ø X 1⅝" BOLT WITH 2" O.D. WASHER IN PLACE. THE ¾"Ø X 1⅝" BOLT SHALL HAVE N. C. THREADS.

C. CAP SCREWS FOR RAIL ATTACHMENT TO ANGLE SHALL CONFORM TO THE REQUIREMENTS OF ASTM F593 ALLOY 305 STAINLESS STEEL. CAP SCREWS TO BE CENTERED IN SLOTS AT 60°F.

D. STANDARD CLAMP BARS (SEE METAL RAIL SHEET).

E. ½" Ø PIPE SLEEVES (IF REQUIRED) TO BE GALVANIZED.

THE COST OF THE STANDARD CLAMP BARS AND CAP SCREWS USED IN THE METAL RAIL TO END POST CONNECTION SHALL BE INCLUDED IN THE UNIT CONTRACT PRICE BID FOR LINEAR FEET OF 1 OR 2 BAR METAL RAILS.

THE ¾" STRUCTURAL CONCRETE INSERT WITH BOLT SHALL BE ASSEMBLED IN THE SHOP.

THE COST OF THE ¾" STRUCTURAL CONCRETE INSERT ASSEMBLY, AND THE ½" PLATES COMPLETE IN PLACE SHALL BE INCLUDED IN THE VARIOUS PAY ITEMS.

THE CONTRACTOR, AT HIS OPTION, MAY USE AN ADHESIVE BONDING SYSTEM IN LIEU OF THE STRUCTURAL CONCRETE INSERT EMBEDDED IN THE END POST. IF THE ADHESIVE BONDING SYSTEM IS USED, THE ¾" Ø X 1⅝" BOLT WITH WASHER SHALL BE REPLACED WITH A ¾"Ø X 6½" BOLT AND 2" O.D. WASHER. ALL SPECIFICATIONS THAT APPLY TO THE ¾" Ø X 1⅝" BOLT SHALL APPLY TO THE ¾"Ø X 6 ½" BOLT. FIELD TESTING OF THE ADHESIVE BONDING SYSTEM IS NOT REQUIRED.

PROJECT NO. B-4590
NEW HANOVER COUNTY
STATION: 18+44.50 -L-

SHEET 3 OF 5

ASSEMBLED BY :	NSC	DATE :	06/2018
CHECKED BY :	MRA	DATE :	07/2018
DRAWN BY :	FCJ 1/88	REV. 5/1/06	TLA/GM
CHECKED BY :	CRK 3/89	REV. 10/1/11	MAA/GM
		REV. 12/17	MAA/THC

6/4/2021
X:\P\1030036006 Div 3 B-4590\Design\Structures\Working DGN\FinalPlans\401_043_B4590_SMU_2MR_S-22_640029.dgn
CuanyN

NORTH CAROLINA PROFESSIONAL ENGINEER SEAL 18442 RICHARD LEON BOLLINGER 6/6/2021

RS&H Architects-Engineers-Planners, Inc.
8521 Six Forks Road, Suite 400
Raleigh, NC 27615
919-926-4100 FAX 919-846-9080
www.rsandh.com
North Carolina License Nos. 50073 * F-0493 * C-28

DOCUMENT NOT CONSIDERED FINAL UNLESS ALL SIGNATURES COMPLETED

STATE OF NORTH CAROLINA
DEPARTMENT OF TRANSPORTATION
RALEIGH
STANDARD

RAIL POST SPACINGS AND END OF RAIL DETAILS
FOR ONE OR TWO BAR METAL RAILS

REVISIONS						SHEET NO.
NO.	BY:	DATE:	NO.	BY:	DATE:	S-22
1			3			TOTAL SHEETS
2			4			42

STD. NO. BMR2

DocuSign Envelope ID: 067A235F-0381-4EA9-9E6C-859425BCECAB

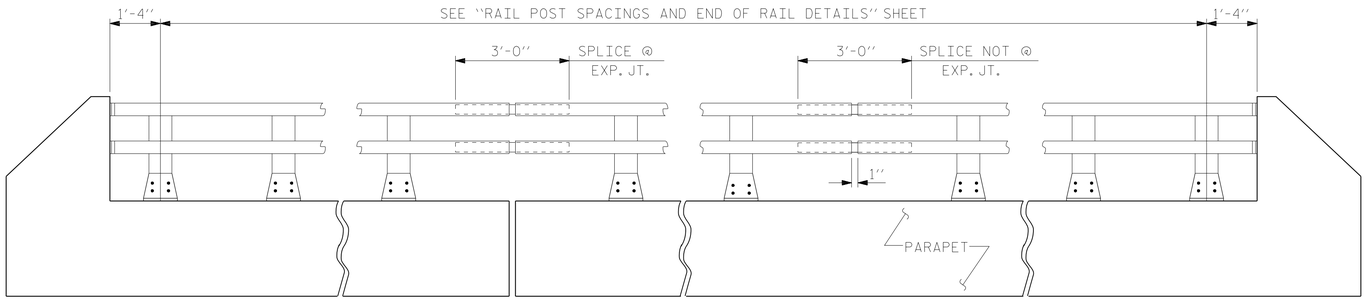

ELEVATION

NOTE : FOR ATTACHMENT OF METAL RAIL TO END POST, SEE STANDARD NO. BMR2.

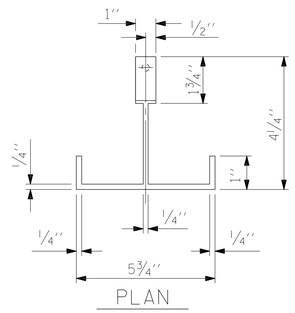

PLAN

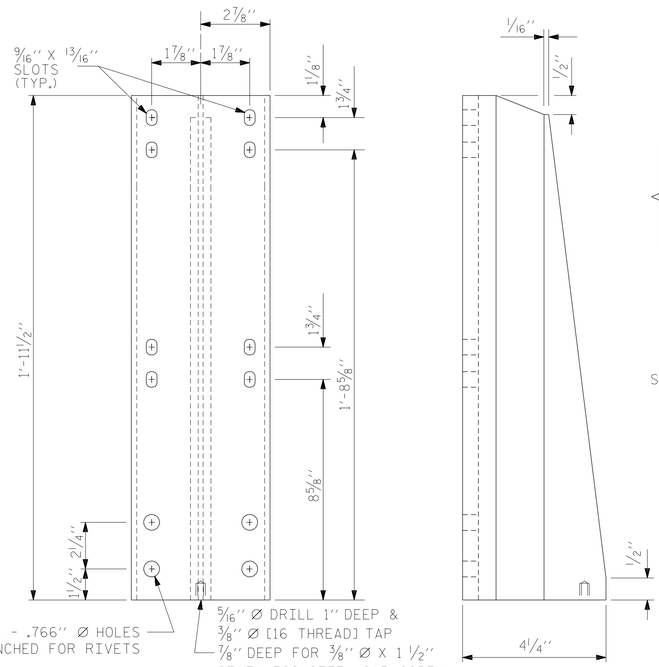

FRONT ELEVATION SIDE ELEVATION

DETAILS OF POST

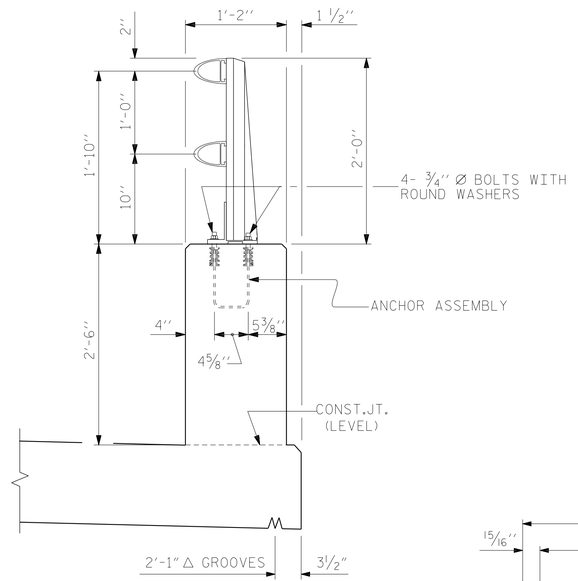

SECTION THROUGH PARAPET AND RAIL

SIDEWALK ON RIGHT SIDE NOT SHOWN FOR CLARITY

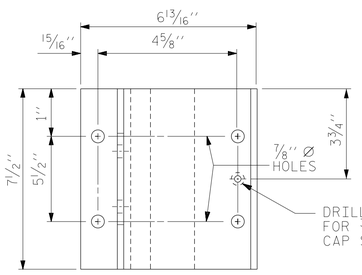

PLAN

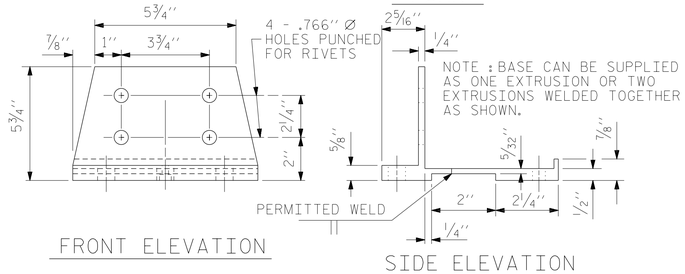

FRONT ELEVATION SIDE ELEVATION

POST BASE DETAILS

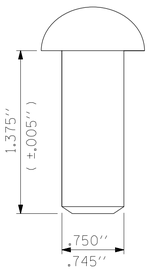

RIVET DETAIL

DOCUMENT NOT CONSIDERED FINAL UNLESS ALL SIGNATURES COMPLETED

NOTES

AT THE CONTRACTOR'S OPTION, METAL RAIL MAY BE EITHER ALUMINUM OR GALVANIZED STEEL IN ACCORDANCE WITH THE REQUIREMENTS OF THE GENERAL NOTES AND THE FOLLOWING SPECIFICATIONS FOR THE ALTERNATE MATERIALS; HOWEVER, THE CONTRACTOR WILL BE REQUIRED TO USE THE SAME RAIL MATERIAL ON ALL STRUCTURES ON THE PROJECT FOR WHICH METAL RAIL IS DESIGNATED.

UNLESS OTHERWISE REQUIRED IN THE CONTRACT DOCUMENTS, THE CONTRACTOR HAS THE OPTION TO USE AN ALTERNATE TO THE 2 BAR METAL RAIL. THE ALTERNATE RAIL SHALL MEET THE REQUIREMENTS OF THE AASHTO LRFDBRIDGE DESIGN SPECIFICATIONS AND MUST BE LISTED ON THE DEPARTMENT'S APPROVED PRODUCTS LIST (APL) UNDER "2 BAR METAL RAIL ALTERNATE". ADJUSTMENTS TO THE CONCRETE PARAPET WILL NOT BE ALLOWED.

ALUMINUM RAILS

MATERIAL FOR POSTS, BASES AND RAILS, EXPANSION BARS AND CLAMP BARS SHALL BE ASTM B-221 ALLOY 6061-T6.

MATERIAL FOR RIVETS SHALL BE ASTM B316 ALLOY 6061-T6. RIVETS SHALL BE STANDARD BUTTON HEAD AND CONE POINT COLD DRIVEN AS PER DRAWING.

THE BASE OF RAIL POSTS, OR ANY OTHER ALUMINUM SURFACE IN CONTACT WITH CONCRETE SHALL BE THOROUGHLY COATED WITH AN ALUMINUM IMPREGNATED CAULKING COMPOUND OF APPROVED QUALITY.

MATERIAL FOR SHIMS TO BE ASTM B209 ALLOY 6061-T6.

GALVANIZED STEEL RAILS

MATERIAL AND GALVANIZING ARE TO CONFORM TO THE FOLLOWING SPECIFICATIONS:

POST, POST BASES, RAILS, EXPANSION BARS AND CLAMP BARS: AASHTO M270 GRADE 36 STRUCTURAL STEEL - GALVANIZED TO AASHTO M111.

RIVETS: RIVETS SHALL MEET THE REQUIREMENTS OF ASTM A502 FOR GRADE 1 RIVETS.

THE CUT ENDS OF GALVANIZED STEEL RAILING, AFTER GRINDING SMOOTH SHALL BE GIVEN TWO COATS OF ZINC RICH PAINT MEETING THE REQUIREMENTS OF FEDERAL SPECIFICATION MIL-P-26915 USAF TYPE 1, OR OF FEDERAL SPECIFICATIONS TT-P-641.

SHIMS: SHIMS SHALL MEET THE REQUIREMENTS OF ASTM A570 FOR GRADE 33 OR A611 FOR GRADE C AND SHALL BE GALVANIZED IN ACCORDANCE WITH AASHTO M111.

RAIL CAPS: RAIL CAPS SHALL MEET THE REQUIREMENTS OF ASTM A570 FOR GRADE 33 OR A611 FOR GRADE C AND SHALL BE GALVANIZED IN ACCORDANCE WITH AASHTO M111.

GENERAL NOTES

RAILING SHALL BE CONTINUOUS FROM END POST TO END POST OF BRIDGE. EACH JOINT IN RAIL LENGTH SHALL BE SPLICED AS DETAILED. PANEL LENGTHS OF RAIL SHALL BE ATTACHED TO A MINIMUM OF THREE POSTS.

FOR END OF RAIL TO CLEAR FACE OF CONCRETE END POST DIMENSION, SEE STANDARD NO. BMR2.

CAP SCREWS SHALL BE ASTM F593 ALLOY 305 STAINLESS STEEL. WASHERS SHALL MEET THE REQUIREMENTS OF ASTM F844 EXCEPT THEY SHALL BE MADE FROM ALLOY 304 STAINLESS STEEL.

CERTIFIED MILL REPORTS ARE REQUIRED FOR RAILS AND POSTS. SHOP INSPECTION IS NOT REQUIRED.

METAL RAIL POSTS SHALL BE SET NORMAL TO CURB GRADE.

METHOD OF MEASUREMENT FOR METAL RAILS: FOR LENGTH OF METAL RAILS TO BE PAID FOR, SEE THE STANDARD SPECIFICATIONS.

CURVED RAIL USAGE: WHERE RAILS ARE TO BE USED ON BRIDGES ON HORIZONTAL AND/OR VERTICAL CURVATURE THE CONTRACTOR MAY, AT HIS OPTION, HAVE THE REQUIRED CURVATURE IN THE RAIL FORMED IN THE SHOP OR IN THE FIELD. IN EITHER EVENT, THE RAIL SHALL CONFORM WITHOUT BUCKLING OR KINKING TO THE REQUIRED CURVATURE IN A UNIFORM MANNER ACCEPTABLE TO THE ENGINEER.

TO INSURE FUTURE IDENTIFICATION OF THE FABRICATOR, A PERMANENT IDENTIFYING MARK SHALL BE PLACED ON EACH POST. THE METHOD OF MARKING AND LOCATION SHALL BE SUCH THAT IT DOES NOT DETRACT FROM THE APPEARANCE OF THE POST, BUT REMAINS VISIBLE AFTER RAIL PLACEMENT.

SHIMS SHALL BE USED AS NECESSARY FOR POST ALIGNMENT.

ALLOY 6351-T5 MAY BE SUBSTITUTED FOR ALLOY 6061-T6 WHERE APPLICABLE.

MINOR VARIATIONS IN DETAILS OF METAL RAIL WILL BE CONSIDERED. DETAILS OF SUCH VARIATIONS, IF DESIRED, SHALL BE SUBMITTED FOR APPROVAL.

GROOVED CONTRACTION JOINTS, 1/2" IN DEPTH, SHALL BE TOOLED IN ALL EXPOSED FACES OF THE PARAPET AND IN ACCORDANCE WITH ARTICLE 825-10(B) OF THE STANDARD SPECIFICATIONS. A CONTRACTION JOINT SHALL BE LOCATED AT EACH THIRD POINT BETWEEN PARAPET EXPANSION JOINTS. ONLY ONE CONTRACTION JOINT IS REQUIRED AT MIDPOINT OF PARAPET SEGMENTS LESS THAN 20 FEET IN LENGTH AND NO CONTRACTION JOINTS ARE REQUIRED FOR THOSE SEGMENTS LESS THAN 10 FEET IN LENGTH.

PAY LENGTH = 507.7 LIN. FT.

PROJECT NO. B-4590

NEW HANOVER COUNTY

STATION: 18+44.50 -L-

SHEET 4 OF 5

ASSEMBLED BY : TWL		DATE : 06/2018	
CHECKED BY : MRA		DATE : 07/2018	
DRAWN BY : EEM 6/94	REV. 10/1/11	MAA/GM	
CHECKED BY : RGW 6/94	REV. 6/13	MAA/GM	
	REV. 12/17	MAA/THC	

NORTH CAROLINA PROFESSIONAL ENGINEER SEAL 18442 RICHARD LEON BOLTINGER II 6/6/2021

RS&H

RS&H Architects-Engineers-Planners, Inc.
8521 Six Forks Road, Suite 400
Raleigh, NC 27615
919-926-4100 FAX 919-846-9080
www.rsandh.com
North Carolina License Nos. 50073 * F-0493 * C-28

STATE OF NORTH CAROLINA
DEPARTMENT OF TRANSPORTATION
RALEIGH

STANDARD

2 BAR METAL RAIL

REVISIONS						SHEET NO.
NO.	BY:	DATE:	NO.	BY:	DATE:	S-23
1			3			TOTAL SHEETS
2			4			42

6/4/2021
X:\P\1030036006 Div 3 B-4590\Design\Structures\Working DGN\FinalPlans\401_045_B4590_SMU_2MR_S-23_640029.dgn
CuanyN

STD. NO. BMR3

DocuSign Envelope ID: 067A235F-0381-4EA9-9E6C-859425BCECAB

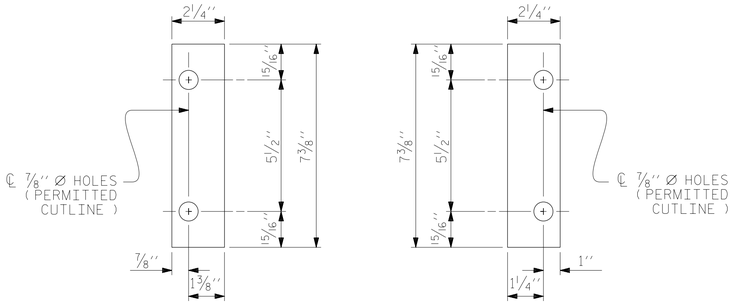

SHIM DETAILS

NOTE :
SHIMS MAY BE CUT ALONG PERMITTED CUTLINE OR SLOTTED TO EDGE OF PLATE TO FACILITATE PLACEMENT.

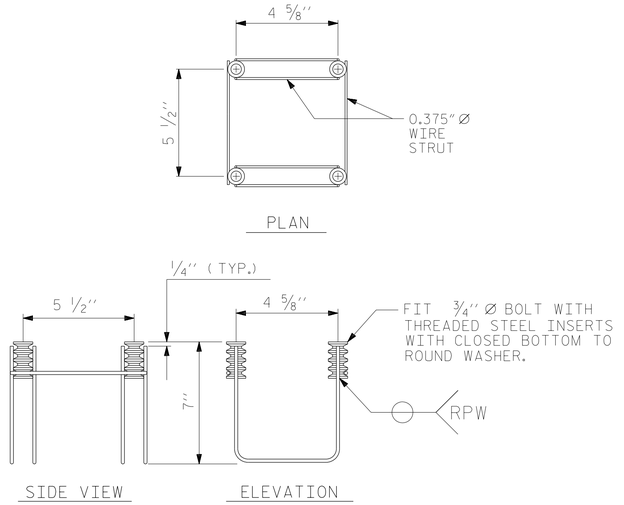

4-BOLT METAL RAIL ANCHOR ASSEMBLY

(94 ASSEMBLIES REQUIRED)

NOTES

STRUCTURAL CONCRETE ANCHOR ASSEMBLY

THE STRUCTURAL CONCRETE ANCHOR ASSEMBLY SHALL CONSIST OF THE FOLLOWING COMPONENTS :

A. FERRULES SHALL BE MADE FROM STEEL MEETING THE REQUIREMENTS OF AASHTO M169, GRADE 12L14 AND SHALL HAVE A MINIMUM LENGTH OF THREADS OF 2'' FOR ¾'' FERRULES.

B. 4 - ¾'' Ø X 2½'' BOLTS WITH WASHERS. BOLTS SHALL CONFORM TO THE REQUIREMENTS OF ASTM A307. BOLTS AND WASHERS SHALL BE GALVANIZED. AT THE CONTRACTOR'S OPTION, STAINLESS STEEL BOLTS AND WASHERS MAY BE USED AS AN ALTERNATE FOR THE ¾'' Ø X 2½'' GALVANIZED BOLTS AND WASHERS. THEY SHALL CONFORM TO OR EXCEED THE MECHANICAL REQUIREMENTS OF ASTM A307. THE USE OF THIS ALTERNATE SHALL BE APPROVED BY THE ENGINEER.

C. WIRE STRUT SHOWN IN THE CONCRETE ANCHOR ASSEMBLY DETAIL IS THE MINIMUM ALLOWABLE SIZE AND SHALL HAVE A MINIMUM TENSILE STRENGTH OF 100,000 PSI. AS AN OPTION, A 7/16'' Ø WIRE STRUT WITH A MINIMUM TENSILE STRENGTH OF 90,000 PSI IS ACCEPTABLE.

D. THE METAL RAIL ANCHOR ASSEMBLIES TO BE HOT DIPPED GALVANIZED TO CONFORM TO REQUIREMENTS OF AASHTO M111.

E. THE COST OF THE METAL RAIL ANCHOR ASSEMBLY WITH BOLTS AND WASHERS COMPLETE IN PLACE SHALL BE INCLUDED IN THE PRICE BID FOR LINEAR FEET OF METAL RAIL.

F. BOLTS TO BE TIGHTENED ONE-HALF TURN WITH A WRENCH FROM A FINGER-TIGHT POSITION.

THE CONTRACTOR MAY USE ADHESIVELY ANCHORED ANCHOR BOLTS IN PLACE OF THE METAL RAIL ANCHOR ASSEMBLY. LEVEL ONE FIELD TESTING IS REQUIRED, AND THE YIELD LOAD OF THE ¾'' Ø BOLT IS 10 KIPS. FOR ADHESIVELY ANCHORED ANCHOR BOLTS OR DOWELS, SEE THE STANDARD SPECIFICATIONS.

WHEN ADHESIVELY ANCHORED ANCHOR BOLTS ARE USED, BOLTS SHALL MEET THE REQUIREMENTS OF ASTM F593 ALLOY 304 STAINLESS STEEL WITH MINIMUM 75,000 PSI ULTIMATE STRENGTH. NUTS SHALL MEET THE REQUIREMENTS OF ASTM F594 ALLOY 304 STAINLESS STEEL AND WASHERS SHALL MEET THE REQUIREMENTS OF ASTM F844 EXCEPT THEY SHALL BE MADE FROM ALLOY 304 STAINLESS STEEL.

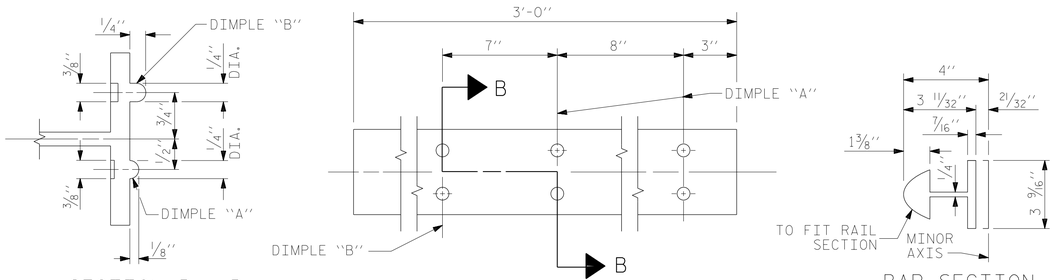

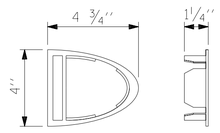

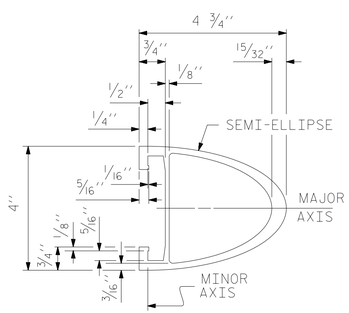

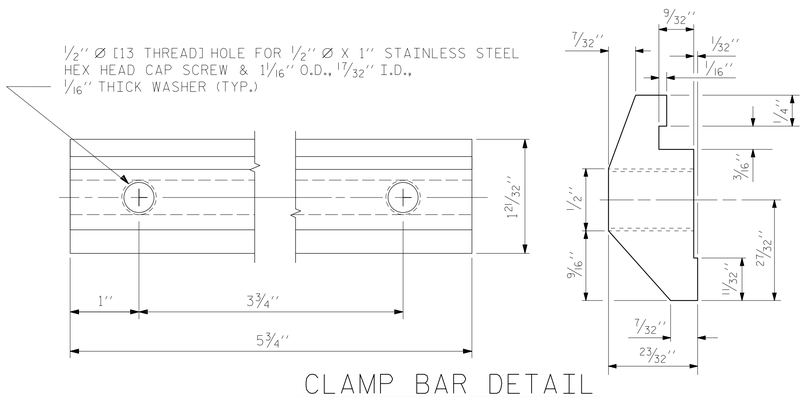

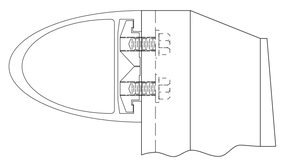

PROJECT NO. B-4590
NEW HANOVER COUNTY
STATION: 18+44.50 -L-

SHEET 5 OF 5

ASSEMBLED BY : TWL	DATE : 06/2018
CHECKED BY : MRA	DATE : 07/2018
DRAWN BY : EEM 6/94	REV. 5/1/06R KMM/GM
CHECKED BY : RGW 6/94	REV. 10/1/11 MAA/GM
	REV. 12/17 MAA/THC

NORTH CAROLINA PROFESSIONAL SEAL 18442 ENGINEER RICHARD LEON BOLTINER
6/6/2021

RS&H Architects-Engineers-Planners, Inc.
8521 Six Forks Road, Suite 400
Raleigh, NC 27615
919-926-4100 FAX 919-846-9080
www.rsandh.com
North Carolina License Nos. 50073 ° F-0493 ° C-28

DOCUMENT NOT CONSIDERED FINAL UNLESS ALL SIGNATURES COMPLETED

STATE OF NORTH CAROLINA
DEPARTMENT OF TRANSPORTATION
RALEIGH

STANDARD

2 BAR METAL RAIL

REVISIONS						SHEET NO.
NO.	BY:	DATE:	NO.	BY:	DATE:	S-24
1			3			TOTAL SHEETS
2			4			42

6/4/2021
X:\P\1030036006 Div 3 B-4590\Design\Structures\Working DGN\FinalPlans\401_047_B4590_SMU_2MR_S-24_640030.dgn
CuanyN

STD. NO. BMR4

DocuSign Envelope ID: 067A235F-0381-4EA9-9E6C-859425BCECAB

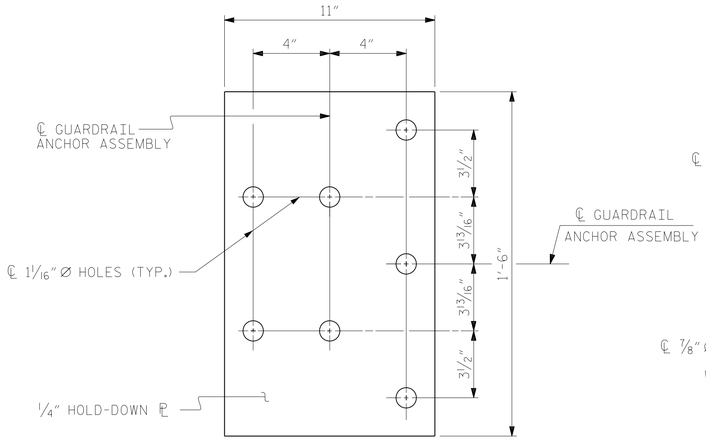

PLAN

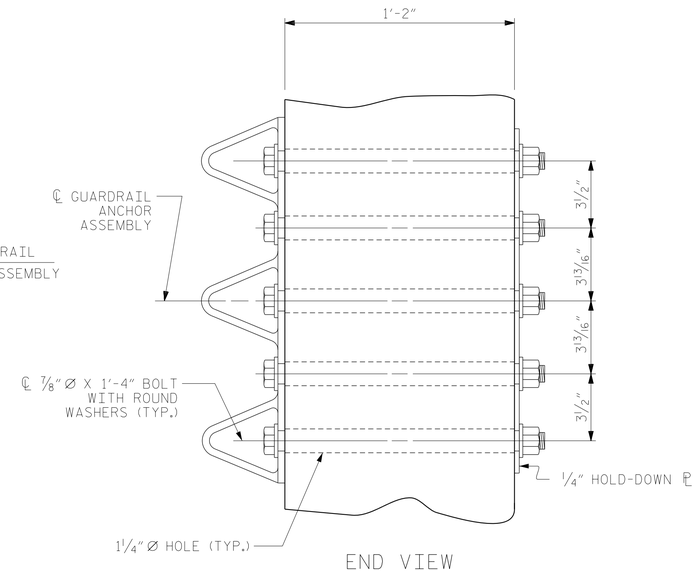

END VIEW

NOTES

THE GUARDRAIL ANCHOR ASSEMBLY SHALL CONSIST OF A 1/4″ HOLD DOWN PLATE AND 7 - 7/8″ Ø BOLTS WITH NUTS AND WASHERS.

THE HOLD-DOWN PLATE SHALL CONFORM TO AASHTO M270 GRADE 36. AFTER FABRICATION, THE HOLD-DOWN PLATE SHALL BE HOT-DIP GALVANIZED IN ACCORDANCE WITH AASHTO M111.

BOLTS SHALL CONFORM TO THE REQUIREMENTS OF ASTM A307 AND NUTS SHALL CONFORM TO THE REQUIREMENTS OF AASHTO M291. BOLTS, NUTS AND WASHERS SHALL BE GALVANIZED. AT THE CONTRACTOR'S OPTION, STAINLESS STEEL BOLTS, NUTS AND WASHERS MAY BE USED AS AN ALTERNATE FOR THE 7/8″ Ø GALVANIZED BOLTS, NUTS AND WASHERS. THEY SHALL CONFORM TO OR EXCEED THE MECHANICAL REQUIREMENTS OF ASTM A307. THE USE OF THIS ALTERNATE SHALL BE APPROVED BY THE ENGINEER.

THE GUARDRAIL ANCHOR ASSEMBLY IS REQUIRED AT ALL POINTS WHERE APPROACH GUARDRAIL IS TO BE ATTACHED TO THE END OF THE PARAPET. FOR POINTS OF ATTACHMENT, SEE SKETCH.

AFTER INSTALLATION, THE EXPOSED THREAD OF THE BOLT SHALL BE BURRED WITH A SHARP POINTED TOOL.

THE COST OF THE GUARDRAIL ANCHOR ASSEMBLIES WITH BOLTS, NUTS AND WASHERS COMPLETE IN PLACE, SHALL BE INCLUDED IN THE VARIOUS PAY ITEMS.

THE VERTICAL REINFORCING BARS MAY BE SHIFTED SLIGHTLY IN THE END POST TO CLEAR ASSEMBLY BOLTS.

THE 1 1/4″ Ø HOLES SHALL BE FORMED OR DRILLED WITH A CORE BIT. IMPACT TOOLS WILL NOT BE PERMITTED. ANY CONCRETE DAMAGED BY THIS WORK SHALL BE REPAIRED TO THE SATISFACTION OF THE ENGINEER.

GUARDRAIL ANCHOR ASSEMBLY DETAILS

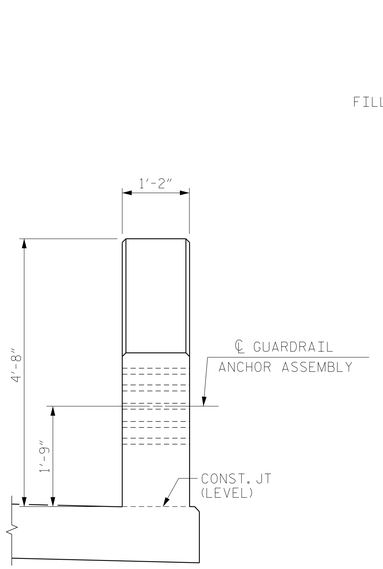

END VIEW

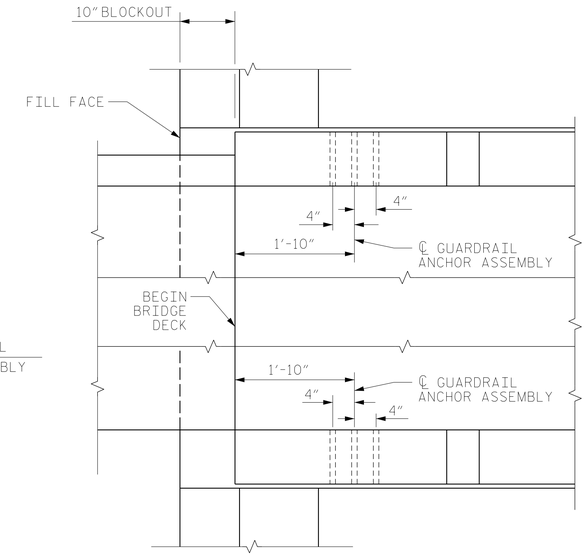

PLAN
END BENT 1 SHOWN,
END BENT 2 SIMILAR

LOCATION OF GUARDRAIL ANCHOR AT END POST

SIDEWALK ON RIGHT SIDE NOT SHOWN FOR CLARITY

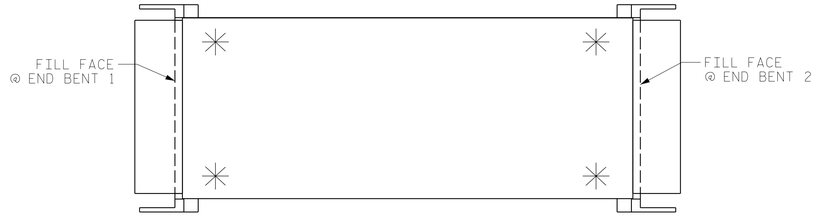

SKETCH SHOWING POINTS OF ATTACHMENT

✳ LOCATION OF GUARDRAIL ATTACHMENT

PROJECT NO. B-4590
NEW HANOVER COUNTY
STATION: 18+44.50 -L-

ASSEMBLED BY : TWL		DATE : 06/2018
CHECKED BY : MRA		DATE : 07/2018
DRAWN BY : MAA 5/10	REV. 1/15	MAA/TMG
CHECKED BY : GM 5/10	REV. 12/17	MAA/THC
	REV. 5/18	MAA/THC

NORTH CAROLINA PROFESSIONAL SEAL 18442 ENGINEER RICHARD LEON BOLLINGER JR.
6/6/2021

RS&H

RS&H Architects-Engineers-Planners, Inc.
8521 Six Forks Road, Suite 400
Raleigh, NC 27615
919-926-4100 FAX 919-846-9080
www.rsandh.com
North Carolina License Nos. 50073 ° F-0493 ° C-28

DOCUMENT NOT CONSIDERED FINAL UNLESS ALL SIGNATURES COMPLETED

STATE OF NORTH CAROLINA
DEPARTMENT OF TRANSPORTATION
RALEIGH

STANDARD

GUARDRAIL ANCHORAGE DETAILS FOR METAL RAILS

REVISIONS						SHEET NO.
NO.	BY:	DATE:	NO.	BY:	DATE:	S-25
1			3			TOTAL SHEETS
2			4			42

STD. NO. GRA3

6/4/2021
X:\P\1030036006 Div 3 B-4590\Design\Structures\Working DGN\Final Plans\401_049_B4590_SMU_GR_S-25_640029.dgn
CuanyN

DocuSign Envelope ID: 067A235F-0381-4EA9-9E6C-859425BCECAB

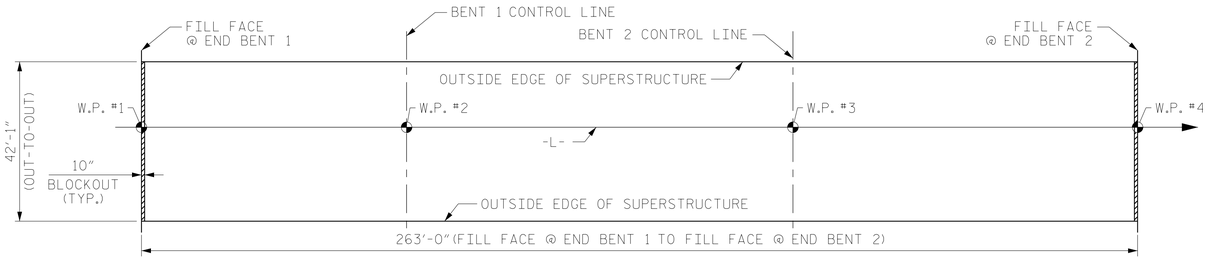

LAYOUT FOR COMPUTING AREA OF REINFORCED CONCRETE DECK SLAB

(SQ. FT. = 10,998)

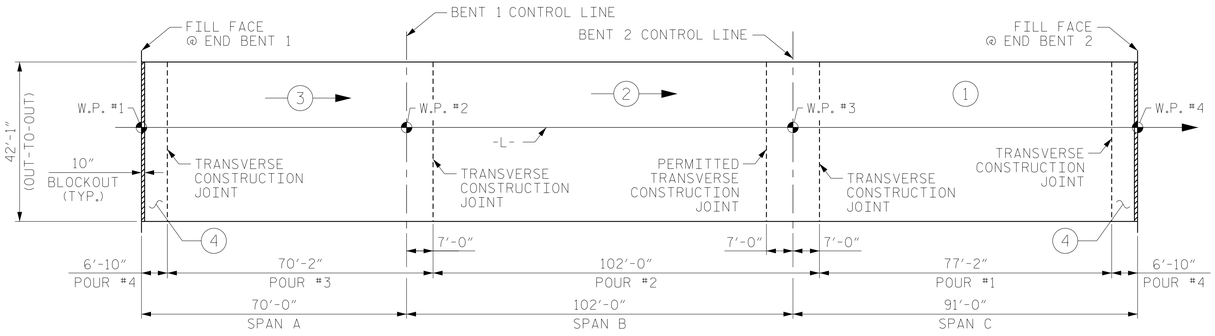

POURING SEQUENCE

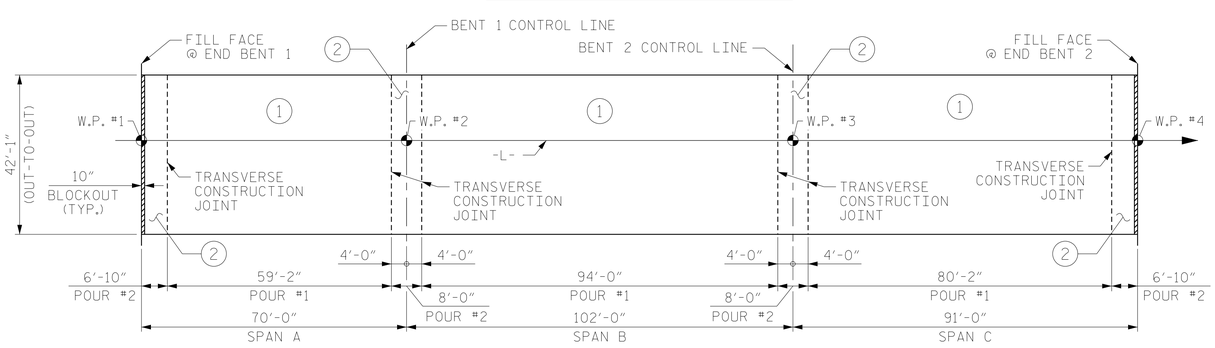

OPTIONAL POURING SEQUENCE

POUR (2) CAN NOT BE STARTED UNTIL BOTH ADJACENT (1) POURS REACH A MINIMUM OF 3,000 PSI

SUPERSTRUCTURE REINFORCING STEEL LENGTHS ARE BASED ON THE FOLLOWING MINIMUM SPLICE LENGTHS

BAR SIZE	SUPERSTRUCTURE EXCEPT APPROACH SLABS, PARAPET, AND BARRIER RAIL		APPROACH SLABS		PARAPET AND BARRIER RAIL
	EPOXY COATED	UNCOATED	EPOXY COATED	UNCOATED	
#4	2'-0"	1'-9"	2'-0"	1'-9"	2'-9"
#5	2'-6"	2'-2"	2'-6"	2'-2"	3'-5"
#6	3'-0"	2'-7"	3'-10"	2'-7"	4'-4"
#7	5'-3"	3'-6"			
#8	6'-10"	4'-7"			

DRAWN BY : NSC DATE : 06/2018
CHECKED BY : MKO DATE : 07/2018
DESIGN ENGINEER OF RECORD: RLB DATE : 06/2021

6/4/2021
X:\P\1030036006 Div 3 B-4590\Design\Structures\Working DGN\FinalPlans\401_051_B4590_SMU_BM_S-26_640029.dgn
CuanyN

SPANS A, B & C

REINFORCING BAR SCHEDULE

BAR	NO.	SIZE	TYPE	LENGTH	WEIGHT
✱ A1	523	#5	STR	41'-7"	22683
✱ A2	524	#4	STR	3'-2"	1108
✱ B1	111	#6	STR	14'-0"	2334
✱ B2	112	#4	STR	17'-7"	1316
✱ B3	56	#7	STR	53'-8"	6143
✱ B4	55	#7	STR	25'-10"	2904
✱ B5	112	#7	STR	13'-4"	3052
✱ B6	112	#4	STR	18'-5"	1378
✱ B7	56	#7	STR	60'-0"	6868
✱ B8	55	#7	STR	29'-0"	3260
✱ B9	112	#4	STR	22'-10"	1708
✱ B10	111	#6	STR	18'-3"	3043
✱ B11	40	#5	STR	54'-3"	2263
✱ B12	60	#4	STR	27'-11"	1119
✱ G1	261	#4	STR	5'-0"	872

BAR	NO.	SIZE	TYPE	LENGTH	WEIGHT
✱ K1	10	#5	STR	41'-7"	434
✱ K2	8	#5	STR	7'-0"	58
✱ K3	16	#5	STR	8'-0"	134
✱ K4	8	#5	STR	7'-4"	61
✱ K5	8	#5	STR	6'-6"	54
✱ K6	4	#5	STR	1'-9"	7
✱ K7	8	#5	STR	2'-3"	19
✱ K8	4	#5	STR	1'-11"	8
✱ K9	4	#5	STR	1'-6"	6
✱ K10	16	#4	STR	7'-0"	75
✱ K11	32	#4	STR	8'-0"	171
✱ K12	16	#4	STR	7'-6"	80
✱ K13	16	#4	STR	5'-1"	54
✱ K14	20	#4	STR	19'-10"	265
✱ S1	208	#4	4	2'-7"	359
✱ S2	64	#4	2	11'-11"	509
✱ S3	64	#4	2	9'-11"	424
✱ U1	64	#4	1	10'-9"	460
✱ U2	40	#4	3	15'-4"	410
✱ U3	76	#4	1	3'-4"	169
✱ U4	16	#4	3	13'-8"	146

BAR TYPES

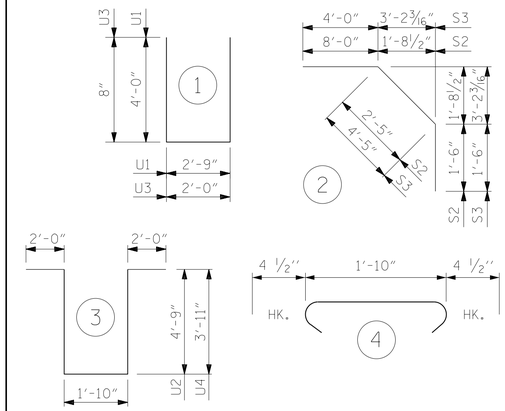

ALL BAR DIMENSIONS ARE OUT TO OUT

SUPERSTRUCTURE BILL OF MATERIAL

	CLASS AA CONCRETE (CU. YDS.)	REINFORCING STEEL (LBS.)	✱EPOXY COATED REINFORCING STEEL (LBS.)
TOTAL✱✱	344.9	0	63,954

✱✱ QUANTITIES FOR CONCRETE PARAPET ARE NOT INCLUDED

GROOVING BRIDGE FLOORS

BRIDGE DECK	8,101 SQ. FT.
APPROACH SLAB @ END BENT 1	450 SQ. FT.
APPROACH SLAB @ END BENT 2	450 SQ. FT.
TOTAL	9,001 SQ. FT.

CLASS "AA" CONCRETE

POUR NO.	CU. YDS.
1	69.8
2	106.3
3	78.5
4	56.2
SIDEWALK	34.1
TOTAL	344.9

PROJECT NO. B-4590
NEW HANOVER COUNTY
STATION: 18+44.50 -L-

DOCUMENT NOT CONSIDERED FINAL UNLESS ALL SIGNATURES COMPLETED

NORTH CAROLINA PROFESSIONAL ENGINEER SEAL 18442 LEON BOLLINGER
6/6/2021

RS&H Architects-Engineers-Planners, Inc.
8521 Six Forks Road, Suite 400
Raleigh, NC 27615
919-926-4100 FAX 919-846-9080
www.rsandh.com
North Carolina License Nos. 50073 ° F-0493 ° C-28

STATE OF NORTH CAROLINA
DEPARTMENT OF TRANSPORTATION
RALEIGH

SUPERSTRUCTURE

BILL OF MATERIAL

REVISIONS						SHEET NO.
NO.	BY:	DATE:	NO.	BY:	DATE:	S-26
1			3			TOTAL SHEETS
2			4			42

DocuSign Envelope ID: 067A235F-0381-4EA9-9E6C-859425BCECAB

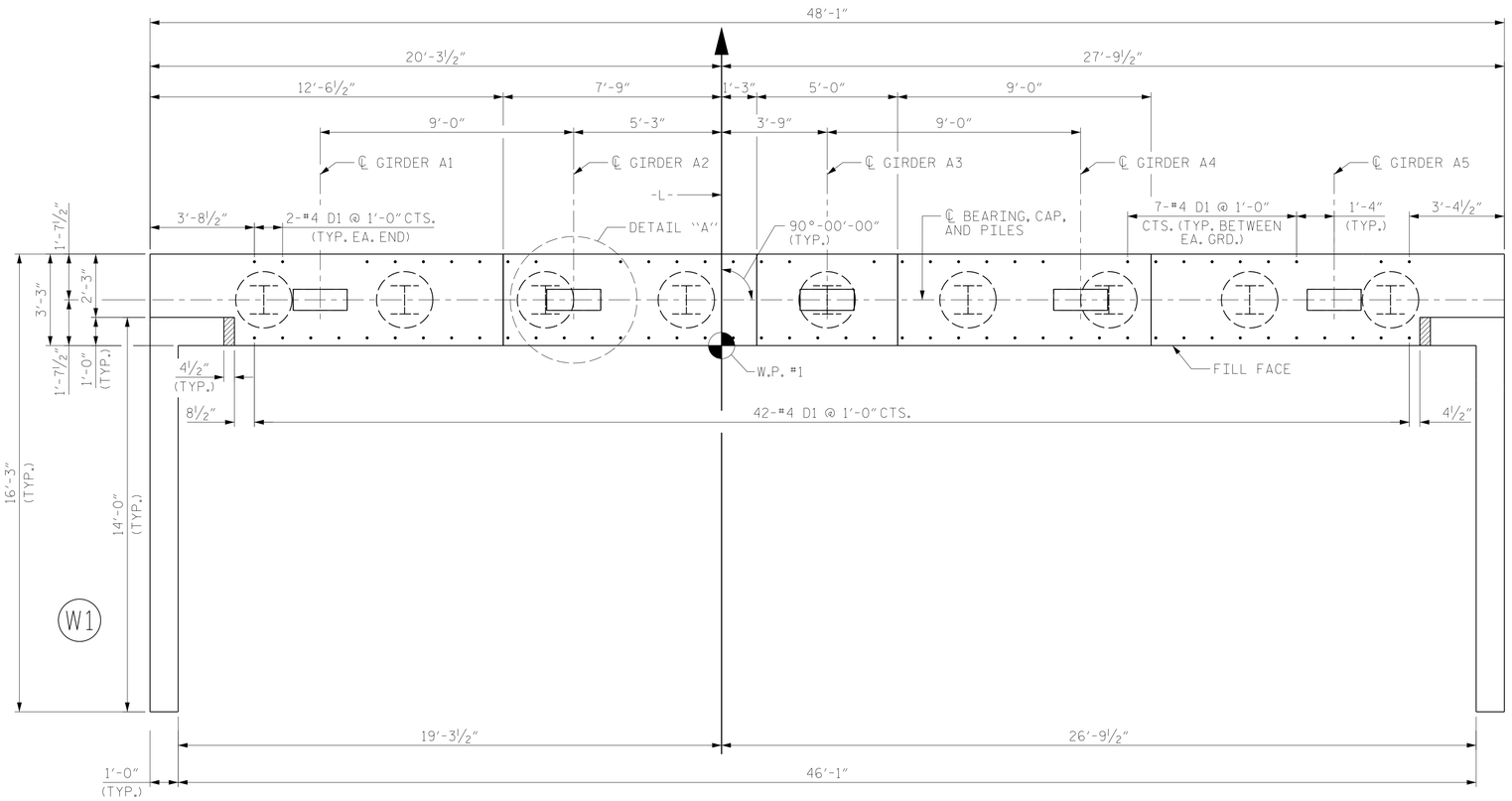

PLAN

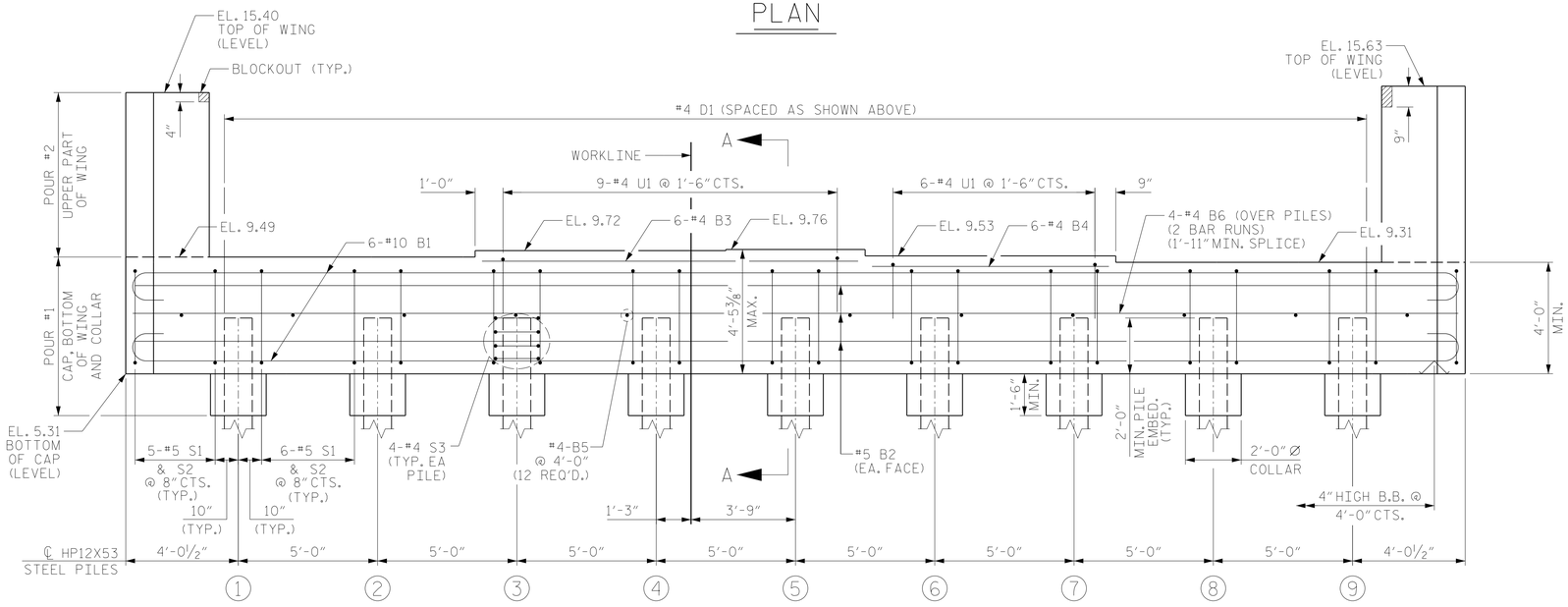

ELEVATION

W2

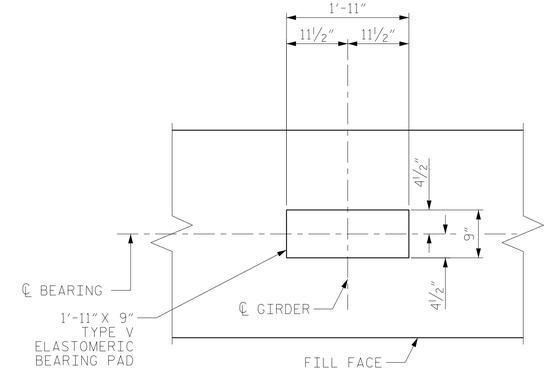

DETAIL "A"

DIMENSIONS TYPICAL FOR EACH BEARING PILE NOT SHOWN FOR CLARITY DOWELS NOT SHOWN FOR CLARITY

NOTES

FOR SECTION A-A, SEE SHEET 4 OF 4.

#4 D1 BARS MAY BE SHIFTED SLIGHTLY TO AVOID STIRRUPS IN CAP AND STEPS IN CAP.

SEE SUPERSTRUCTURE SHEETS FOR UPPER PART OF INTEGRAL END BENT DETAILS.

THE CONCRETE IN THE SHADED AREA OF THE WING SHALL BE POURED AFTER THE CONCRETE BARRIER IS CAST IF SLIP FORMING IS USED.

METALLIZE PILES IN ACCORDANCE WITH TABLE 2 OF THE DEPARTMENT THERMAL SPRAYED COATINGS (METALLIZATION) PROGRAM. FOR THERMAL SPRAYED COATINGS, SEE SPECIAL PROVISIONS.

AFTER DRIVING THE PILES, APPLY 1 COAT EACH OF 1080-09 BROWN AND 1080-09 GRAY PAINT TO THE EMBEDDED SECTION OF THE METALLIZED PILE PRIOR TO CONCRETE EMBEDMENT IN ACCORDANCE WITH SECTION 442 OF THE STANDARD SPECIFICATIONS.

THE TOP SURFACE OF THE END BENT CAP AND WINGS, EXCLUDING THE BEARING AREA, SHALL BE RAKED TO A DEPTH OF ¼".

PROJECT NO. B-4590

NEW HANOVER COUNTY

STATION: 18+44.50 -L-

SHEET 1 OF 4

DRAWN BY : MRA DATE : 06/2018

CHECKED BY : MAL DATE : 08/2018

DESIGN ENGINEER OF RECORD: RLB DATE : 06/2021

6/4/2021
X:\P\1030036006 Div 3 B-4590\Design\Structures\Working DGN\FinalPlans\401_053_B4590_SMU_E1_S-27_640029.dgn
CuanyN

NORTH CAROLINA PROFESSIONAL ENGINEER SEAL 18442 RICHARD LEON BOLLINGER III
6/6/2021

RS&H

RS&H Architects-Engineers-Planners, Inc.
8521 Six Forks Road, Suite 400
Raleigh, NC 27615
919-928-4100 FAX 919-846-9080
www.rsandh.com
North Carolina License Nos. 50073 * F-0493 * C-28

DOCUMENT NOT CONSIDERED FINAL UNLESS ALL SIGNATURES COMPLETED

STATE OF NORTH CAROLINA
DEPARTMENT OF TRANSPORTATION
RALEIGH

SUBSTRUCTURE

INTEGRAL END BENT NO. 1

REVISIONS						SHEET NO.
NO.	BY:	DATE:	NO.	BY:	DATE:	S-27
1			3			TOTAL SHEETS
2			4			42

DocuSign Envelope ID: 067A235F-0381-4EA9-9E6C-859425BCECAB

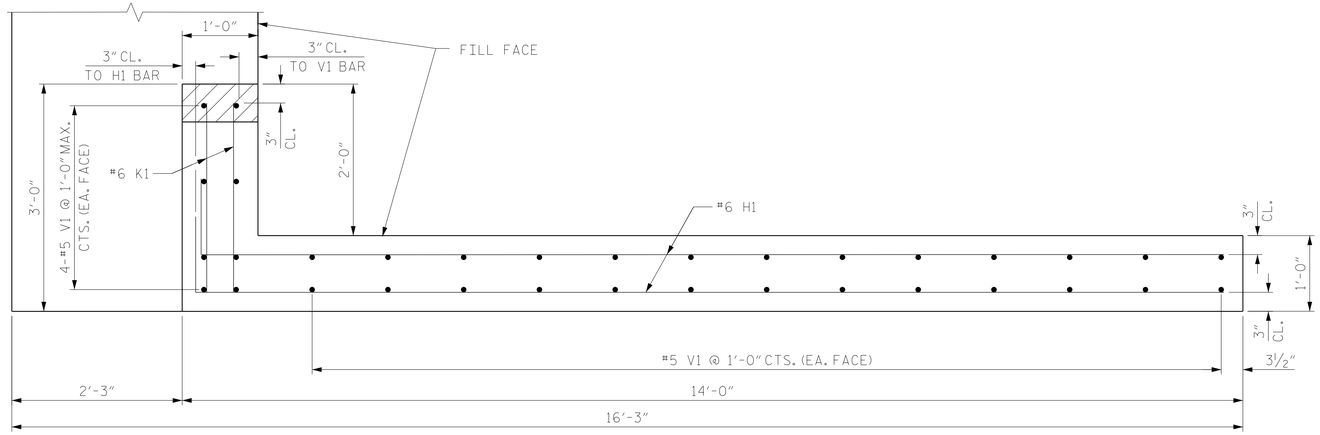

PLAN OF WING - W1

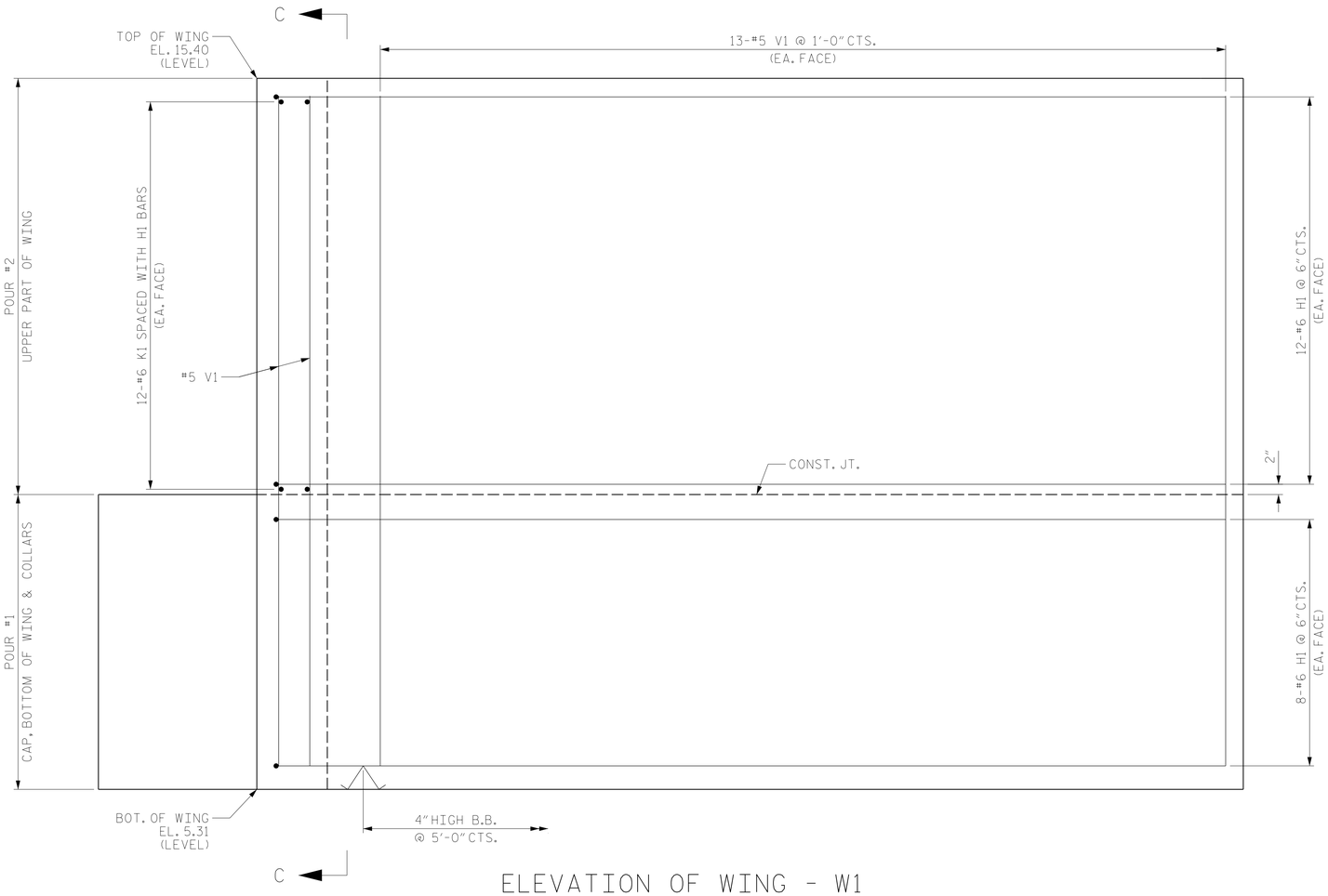

ELEVATION OF WING - W1

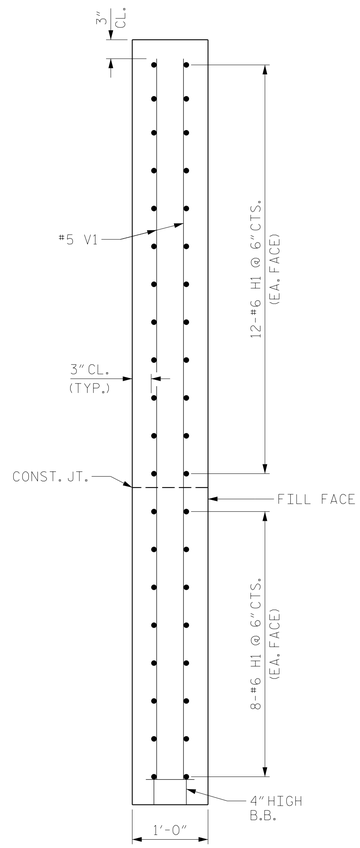

SECTION C-C

PROJECT NO. B-4590

NEW HANOVER COUNTY

STATION: 18+44.50 -L-

SHEET 2 OF 4

NORTH CAROLINA PROFESSIONAL ENGINEER SEAL 18442 RICHARD LEON BOLLINGER JR. 6/6/2021

RS&H

RS&H Architects-Engineers-Planners, Inc.
8521 Six Forks Road, Suite 400
Raleigh, NC 27615
919-926-4100 FAX 919-846-9080
www.rsandh.com
North Carolina License Nos. 50073 * F-0493 * C-28

STATE OF NORTH CAROLINA
DEPARTMENT OF TRANSPORTATION
RALEIGH

SUBSTRUCTURE

INTEGRAL END BENT NO. 1

REVISIONS						SHEET NO.
NO.	BY:	DATE:	NO.	BY:	DATE:	S-28
1			3			TOTAL SHEETS
2			4			42

DRAWN BY : MRA DATE : 06/2018
CHECKED BY : MAL DATE : 08/2018
DESIGN ENGINEER OF RECORD: RLB DATE : 06/2021

DOCUMENT NOT CONSIDERED FINAL UNLESS ALL SIGNATURES COMPLETED

6/4/2021
X:\P\1030036006 Div 3 B-4590\Design\Structures\Working DGN\FinalPlans\401_055_B4590_SMU_E1_S-28_640029.dgn
CuanyN

DocuSign Envelope ID: 067A235F-0381-4EA9-9E6C-859425BCECAB

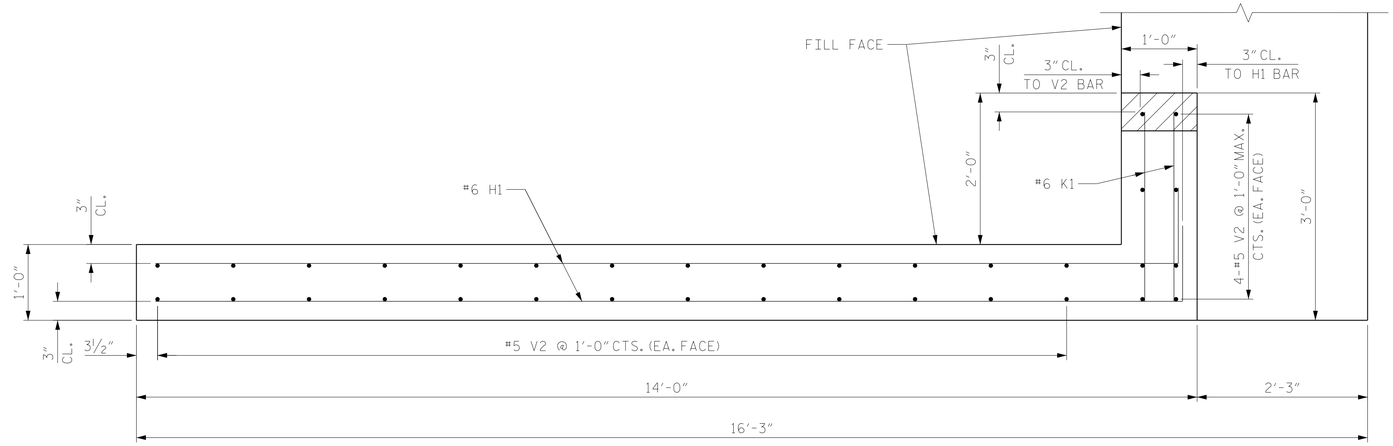

PLAN OF WING - W2

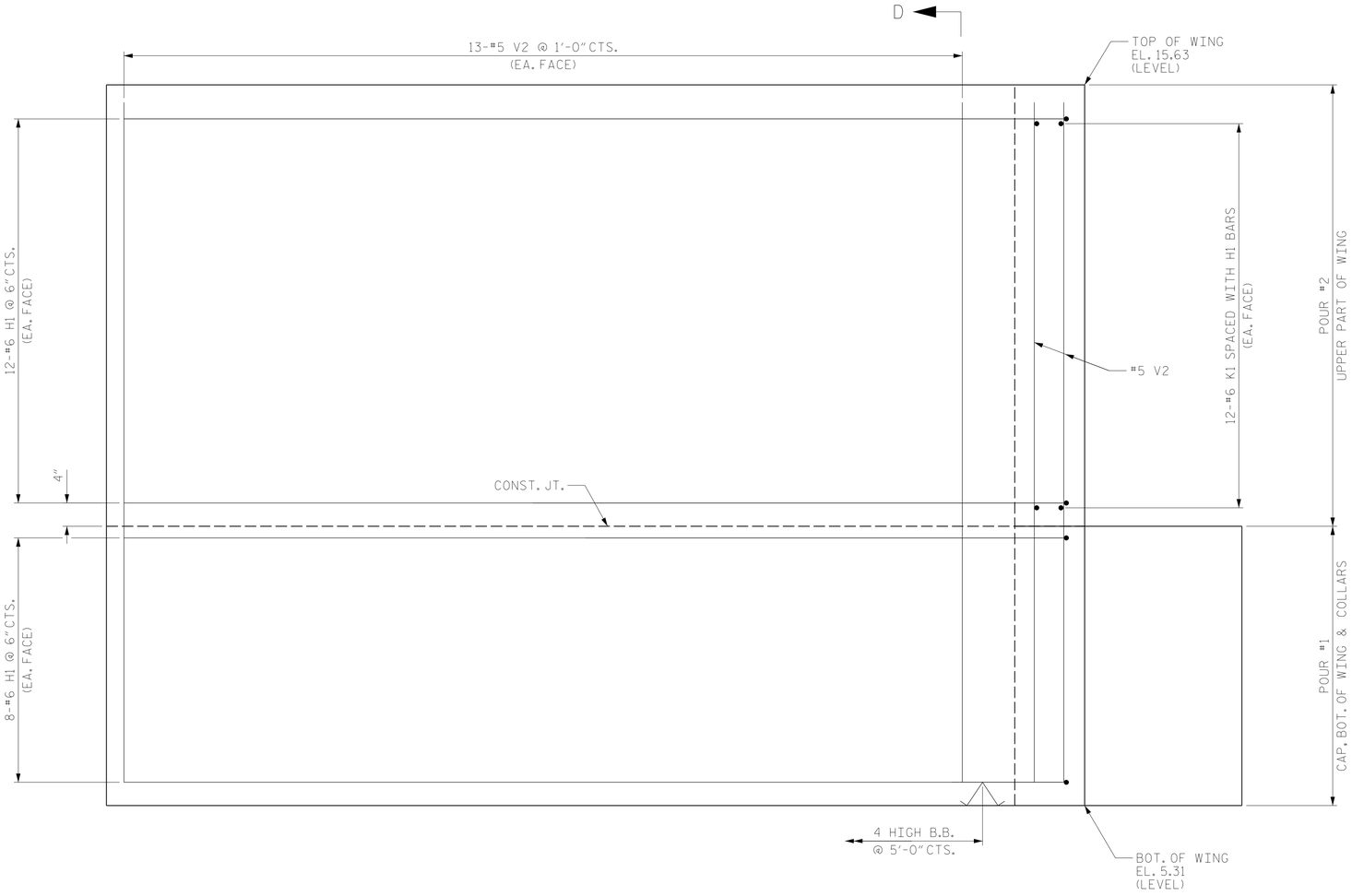

ELEVATION OF WING - W2

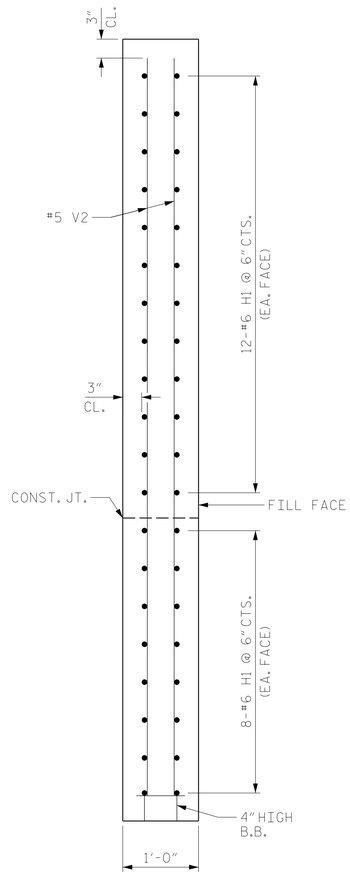

SECTION D-D

PROJECT NO. B-4590
NEW HANOVER COUNTY
STATION: 18+44.50 -L-

SHEET 3 OF 4

STATE OF NORTH CAROLINA
DEPARTMENT OF TRANSPORTATION
RALEIGH

SUBSTRUCTURE

INTEGRAL
END BENT NO. 1

NORTH CAROLINA PROFESSIONAL SEAL 18442 ENGINEER RICHARD LEON BOLLINGER, JR.
6/6/2021

RS&H
RS&H Architects-Engineers-Planners, Inc.
8521 Six Forks Road, Suite 400
Raleigh, NC 27615
919-926-4100 FAX 919-846-9080
www.rsandh.com
North Carolina License Nos. 50073 * F-0493 * C-28

REVISIONS						SHEET NO.
NO.	BY:	DATE:	NO.	BY:	DATE:	S-29
1			3			TOTAL SHEETS
2			4			42

DOCUMENT NOT CONSIDERED FINAL UNLESS ALL SIGNATURES COMPLETED

DRAWN BY :	TWL	DATE :	06/2018
CHECKED BY :	MAL	DATE :	08/2018
DESIGN ENGINEER OF RECORD:	RLB	DATE :	06/2021

6/4/2021
X:\P\1030036006 Div 3 B-4590\Design\Structures\Working DGN\FinalPlans\401_057_B4590_SMU_E1_S-29_640029.dgn
CuanyN

DocuSign Envelope ID: 067A235F-0381-4EA9-9E6C-859425BCECAB

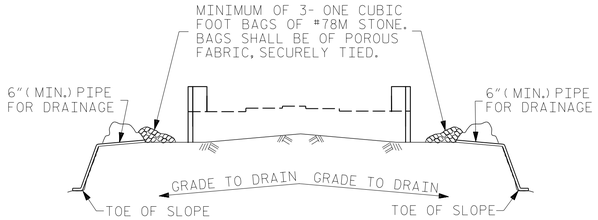

BAGGED STONE AND PIPE SHALL BE PLACED IMMEDIATELY AFTER COMPLETION OF END BENT EXCAVATION. PIPE MAY BE EITHER CONCRETE, CORRUGATED STEEL, CORRUGATED ALUMINUM ALLOY, OR CORRUGATED PLASTIC. PERFORATED PIPE WILL NOT BE ALLOWED.

BAGGED STONE SHALL REMAIN IN PLACE UNTIL THE ENGINEER DIRECTS THAT IT BE REMOVED. THE CONTRACTOR SHALL REMOVE AND DISPOSE OF SILT ACCUMULATIONS AT BAGGED STONE WHEN SO DIRECTED BY THE ENGINEER. BAGS SHALL BE REMOVED AND REPLACED WHENEVER THE ENGINEER DETERMINES THAT THEY HAVE DETERIORATED AND LOST THEIR EFFECTIVENESS.

NO SEPARATE PAYMENT WILL BE MADE FOR THIS WORK AND THE ENTIRE COST OF THIS WORK SHALL BE INCLUDED IN THE UNIT CONTRACT PRICE BID FOR THE SEVERAL PAY ITEMS.

TEMPORARY DRAINAGE AT END BENT

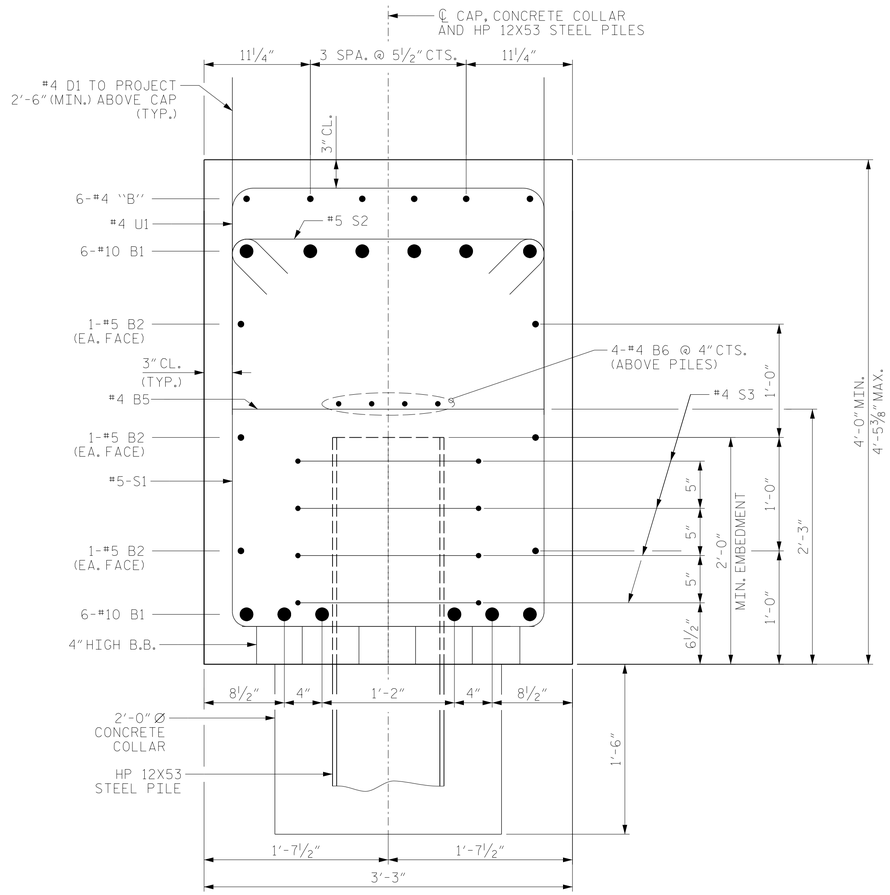

SECTION A-A

✳ THE TOP SURFACE OF THE END BENT CAP & WINGS, EXCLUDING THE BEARING AREA, SHALL BE RAKED TO A DEPTH OF ¼".

BAR TYPES

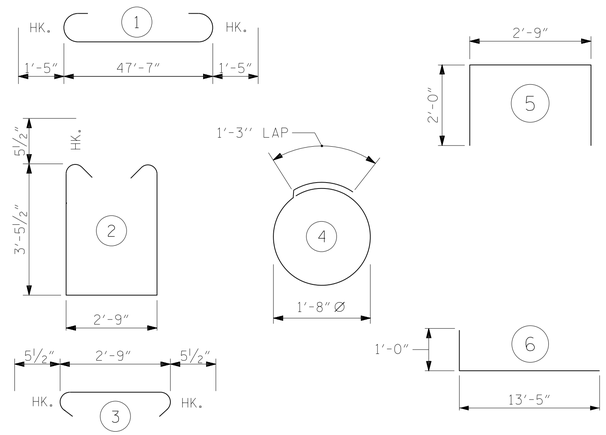

ALL BAR DIMENSIONS ARE OUT TO OUT.

BILL OF MATERIAL

END BENT NO. 1

BAR	NO.	SIZE	TYPE	LENGTH	WEIGHT
B1	12	#10	1	50'-5"	2603
B2	6	#5	STR	47'-7"	298
B3	6	#4	STR	13'-6"	54
B4	6	#4	STR	9'-0"	36
B5	12	#4	STR	2'-9"	22
B6	8	#4	STR	24'-9"	132
D1	74	#4	STR	4'-6"	222
H1	80	#6	6	14'-5"	1732
K1	48	#6	STR	2'-6"	180
S1	58	#5	2	10'-7"	640
S2	58	#5	3	3'-8"	222
S3	36	#4	4	6'-6"	156
U1	15	#4	5	6'-9"	68
V1	34	#5	STR	9'-6"	337
V2	34	#5	STR	9'-8"	343

EPOXY COATED REINFORCING STEEL 7,045 LBS.

CLASS AA CONCRETE

POUR #1
CAP, CONCRETE COLLARS & LOWER PART OF WINGS 30.1 C.Y.

POUR #2
UPPER PART OF WINGS 7.4 C.Y.

TOTAL CLASS AA CONCRETE 37.5 C.Y.

HP 12 X 53 STEEL PILES
NO. 9 550.0 LIN. FT.

STEEL PILE POINTS NO. 9

PILE DRIVING EQUIPMENT SETUP NO. 9

PREDRILLING FOR PILES 101.0 LIN. FT.

PILE REDRIVES 5 EA.

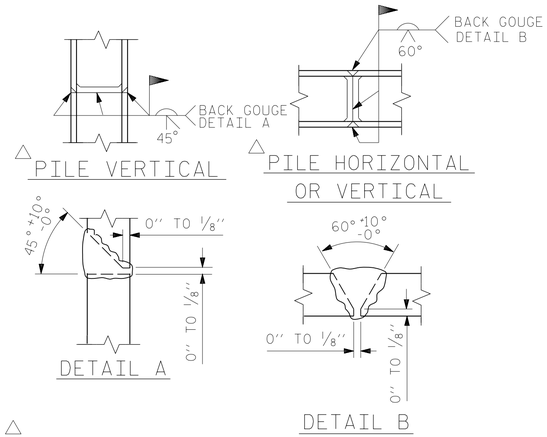

△ POSITION OF PILE DURING WELDING.

PILE SPLICE DETAILS

PROJECT NO. B-4590

NEW HANOVER COUNTY

STATION: 18+44.50 -L-

SHEET 4 OF 4



6/6/2021

RS&H

RS&H Architects-Engineers-Planners, Inc.
8521 Six Forks Road, Suite 400
Raleigh, NC 27615
919-926-4100 FAX 919-846-9080
www.rsandh.com
North Carolina License Nos. 50073 * F-0493 * C-28

STATE OF NORTH CAROLINA
DEPARTMENT OF TRANSPORTATION
RALEIGH

SUBSTRUCTURE

INTEGRAL END BENT NO. 1

REVISIONS						SHEET NO.
NO.	BY:	DATE:	NO.	BY:	DATE:	S-30
1			3			TOTAL SHEETS
2			4			42

DRAWN BY : MRA DATE : 06/2018
CHECKED BY : MAL DATE : 08/2018
DESIGN ENGINEER OF RECORD: RLB DATE : 06/2021

DOCUMENT NOT CONSIDERED FINAL UNLESS ALL SIGNATURES COMPLETED

6/4/2021
X:\P\1030036006 Div 3 B-4590\Design\Structures\Working DGN\FinalPlans\401_059_B4590_SMU_E1_S-30_640029.dgn
CuonyN

DocuSign Envelope ID: 067A235F-0381-4EA9-9E6C-859425BCECAB

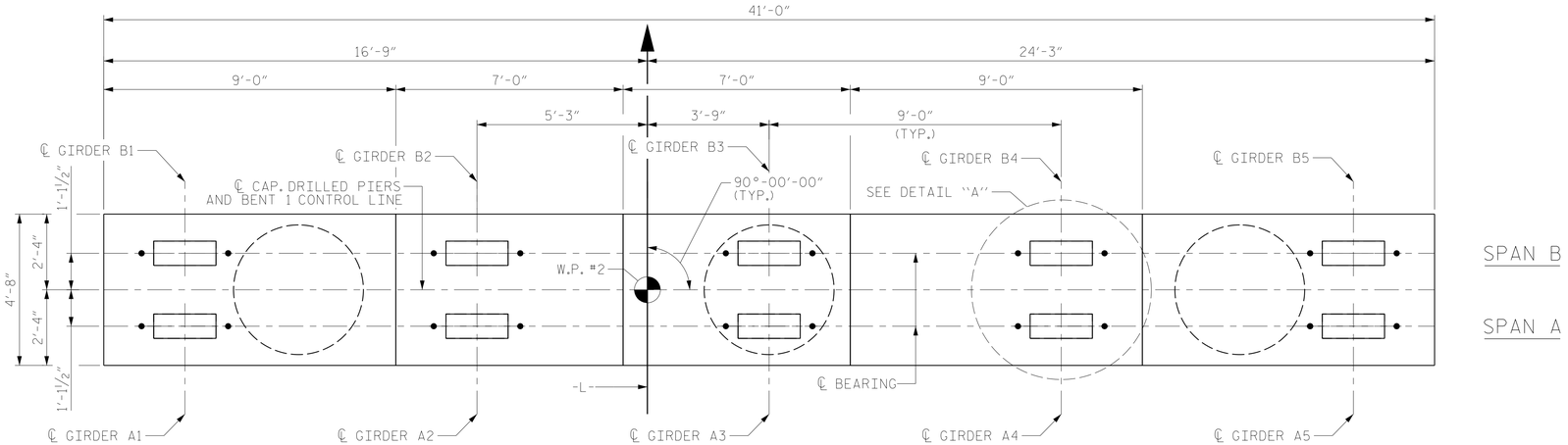

PLAN

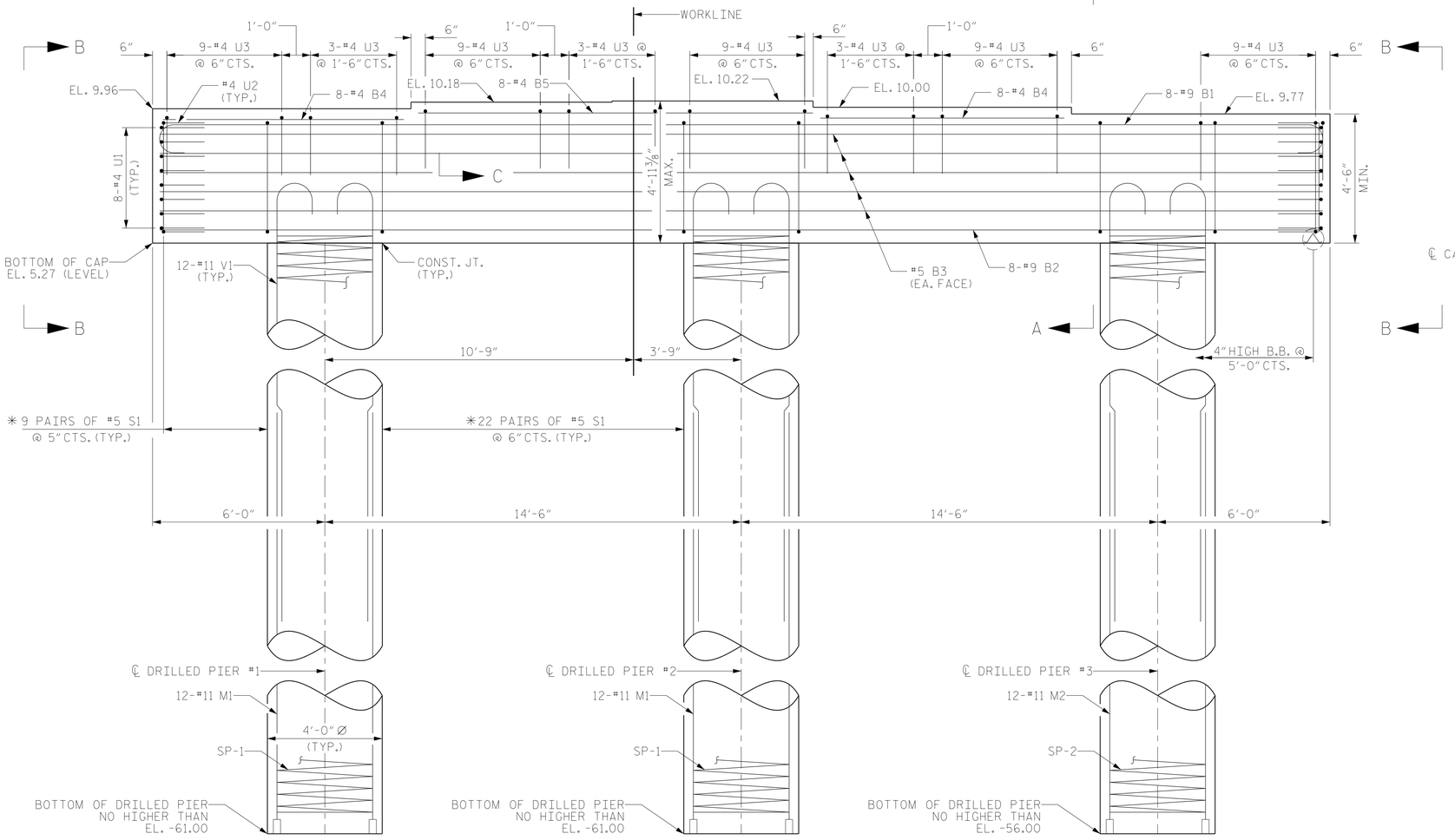

ELEVATION

NOTES

FOR SECTION CUTS AND VIEWS, SEE SHEET 2 OF 2.

FOR REINFORCING BILL OF MATERIAL, SEE SHEET 2 OF 2.

STIRRUPS AND U3 BARS IN CAP MAY BE SHIFTED AS NECESSARY TO AVOID ANCHOR BOLTS.

HOOKS ON "V" BARS MAY BE TURNED AS NECESSARY FOR PLACING REINFORCING STEEL.

ALL STEEL IN THE DRILLED SHAFTS IS INCLUDED IN THE PAY ITEMS FOR "EPOXY COATED REINFORCING STEEL" AND "EPOXY COATED SPIRAL COLUMN REINFORCING STEEL".

THE CONTRACTOR'S ATTENTION IS CALLED TO THE FACT THAT THE LONGITUDINAL REINFORCEMENT FOR THE DRILLED PIERS IS DETAILED WITH 3 FEET OF EXTRA LENGTH.

✳ INVERT ALTERNATE #5 S1 STIRRUP PAIRS.

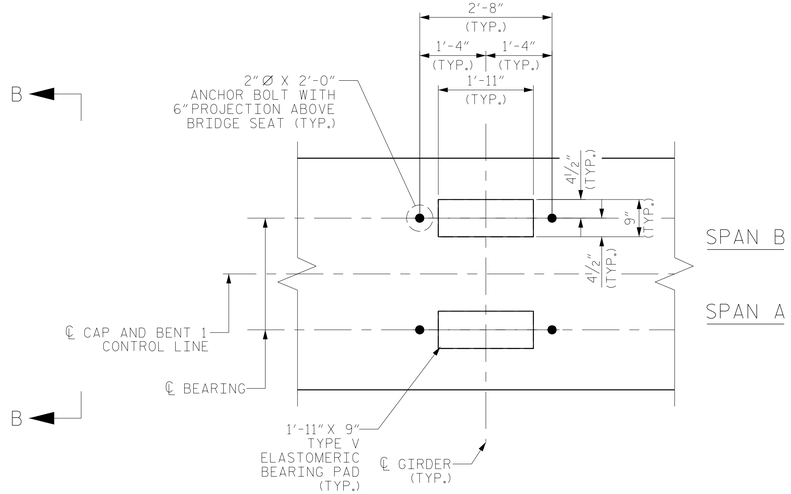

DETAIL "A"

DIMENSIONS ARE TYPICAL FOR EACH GIRDER

PROJECT NO. B-4590

NEW HANOVER COUNTY

STATION: 18+44.50 -L-

SHEET 1 OF 2

NORTH CAROLINA PROFESSIONAL SEAL 18442 ENGINEER RICHARD LEON BOLLINGER JR. 6/6/2021

RS&H

RS&H Architects-Engineers-Planners, Inc.
8521 Six Forks Road, Suite 400
Raleigh, NC 27615
919-926-4100 FAX 919-846-9080
www.rsandh.com
North Carolina License Nos. 50073 * F-0493 * C-28

STATE OF NORTH CAROLINA
DEPARTMENT OF TRANSPORTATION
RALEIGH

SUBSTRUCTURE

BENT NO. 1

REVISIONS						SHEET NO.
NO.	BY:	DATE:	NO.	BY:	DATE:	S-31
1			3			TOTAL SHEETS
2			4			42

DOCUMENT NOT CONSIDERED FINAL UNLESS ALL SIGNATURES COMPLETED

DRAWN BY :	MRA	DATE :	06/2018
CHECKED BY :	MAL	DATE :	08/2018
DESIGN ENGINEER OF RECORD:	RLB	DATE :	06/2021

6/4/2021
X:\PJ\10300036006 Div 3 B-4590\Design\Structures\Working DGN\FinalPlans\401_061_B4590_SMU_B1_S-31_640029.dgn
CuanyN

DocuSign Envelope ID: 067A235F-0381-4EA9-9E6C-859425BCECAB

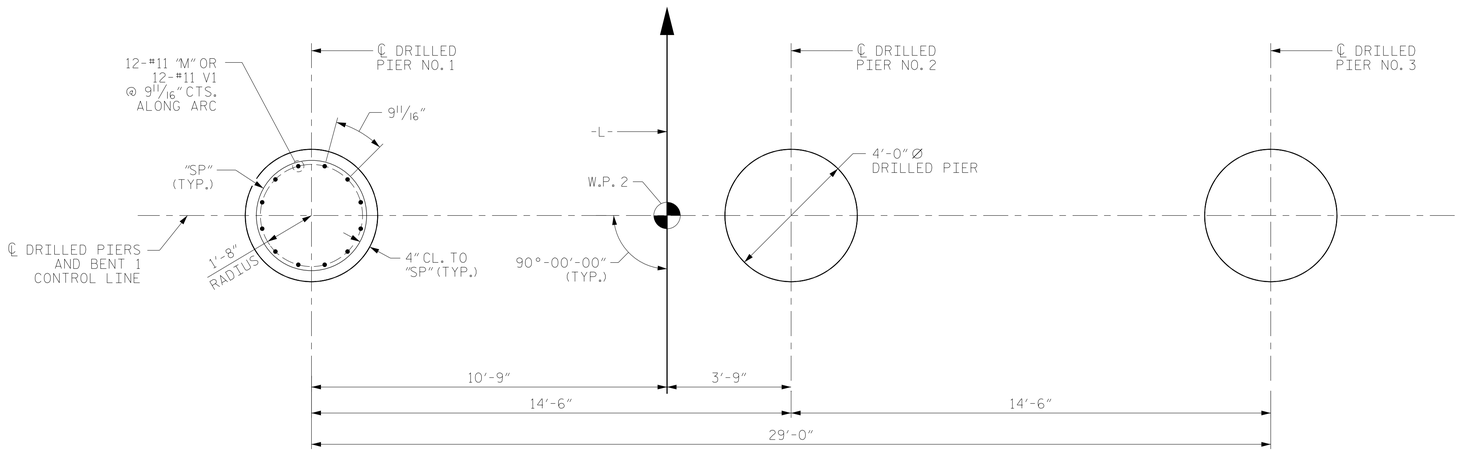

PLAN OF DRILLED PIERS

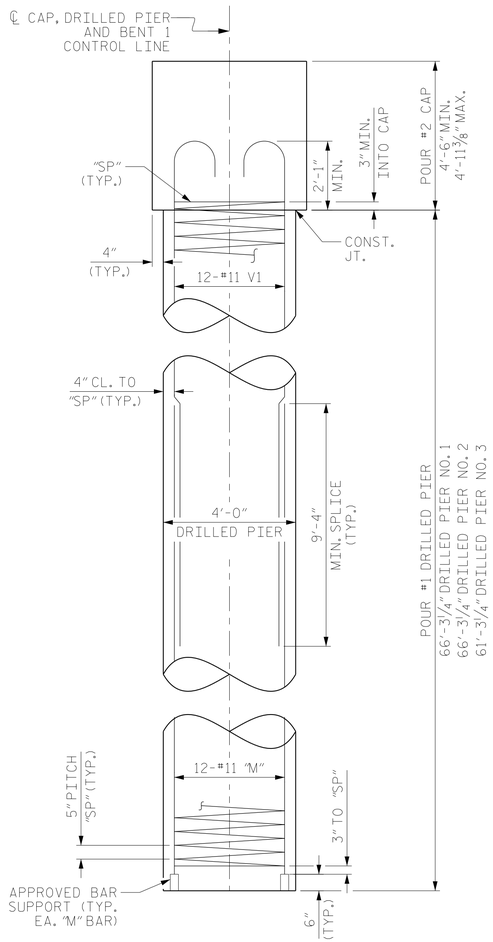

END ELEVATION

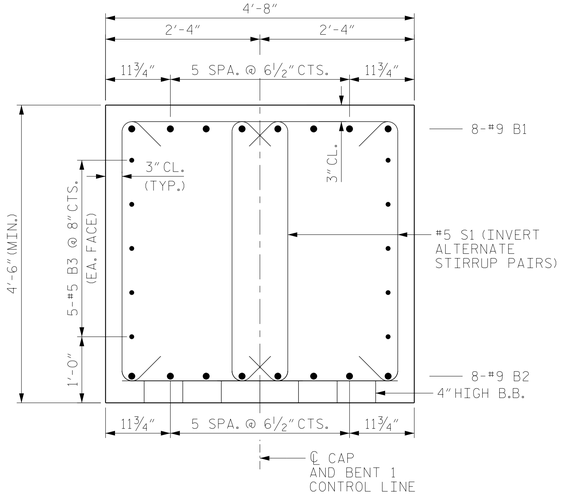

SECTION A-A

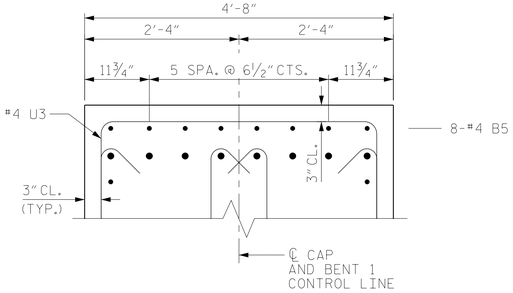

SECTION C-C

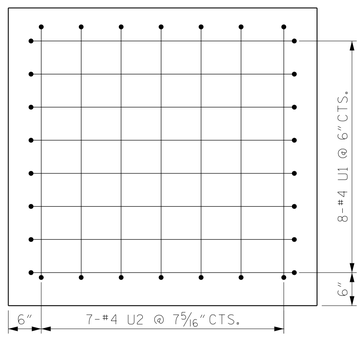

VIEW B-B

BAR TYPES

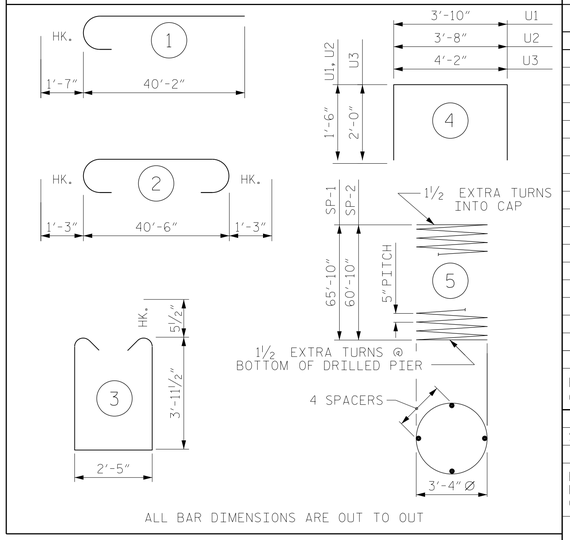

ALL BAR DIMENSIONS ARE OUT TO OUT

BILL OF MATERIAL
FOR BENT 1

BAR	NO.	SIZE	TYPE	LENGTH	WEIGHT
B1	8	#9	2	43'-0"	1170
B2	8	#9	STR	40'-6"	1102
B3	10	#5	STR	40'-6"	422
B4	16	#4	STR	9'-0"	96
B5	8	#4	STR	13'-6"	72
M1	24	#11	STR	40'-2"	5122
M2	12	#11	STR	35'-1"	2237
S1	124	#5	3	11'-3"	1455
U1	16	#4	4	6'-10"	73
U2	14	#4	4	6'-8"	62
U3	54	#4	4	8'-2"	295
V1	36	#11	1	40'-2"	7683

EPOXY COATED REINFORCING STEEL (FOR BENT 1) 19,789 LBS.

SP-1	2	**	5	3322'-0"	3465
SP-2	1	**	5	1537'-2"	1603

EPOXY COATED SPIRAL COLUMN REINFORCING STEEL (FOR BENT 1) 5,068 LBS.

** THE SP-1 & SP-2 SPIRAL REINFORCING STEEL SHALL BE W31 OR D-31 COLD DRAWN WIRE OR #5 PLAIN OR DEFORMED BAR

CLASS AA CONCRETE BREAKDOWN (FOR BENT 1)

POUR #2 (CAP)	33.6 C.Y.
TOTAL CLASS AA CONCRETE	33.6 C.Y.

DRILLED PIERS: (FOR BENT 1)

DRILLED PIER CONCRETE POUR #1 (DRILLED PIERS)	90.3 C.Y.
4'-0" Ø DRILLED PIER NOT IN SOIL	0.0 LIN. FT.
4'-0" Ø DRILLED PIER IN SOIL	193.8 LIN. FT.
PERMENENT STEEL CASING FOR 4'-0" Ø DRILLED PIER	121.8 LIN. FT.
SID INSPECTION	1 EA.
△ CSL TUBES	793.3 LIN. FT.

△ NO SEPERATE PAYMENT WILL BE MADE FOR CSL TUBES. CSL TUBES WILL BE INCLUDED IN THE UNIT BID PRICE FOR DRILLED PIERS.

PROJECT NO. B-4590
NEW HANOVER COUNTY
STATION: 18+44.50 -L-

SHEET 2 OF 2

DRAWN BY : MRA	DATE : 06/2018		
CHECKED BY : MAL	DATE : 08/2018		
DESIGN ENGINEER OF RECORD: RLB	DATE : 06/2021		

NORTH CAROLINA PROFESSIONAL ENGINEER SEAL 18421 RICHARD LEON SOLLINGER JR. ENGINEER
6/6/2021

RS&H Architects-Engineers-Planners, Inc.
8521 Six Forks Road, Suite 400
Raleigh, NC 27615
919-926-4100 FAX 919-846-9080
www.rsandh.com
North Carolina License Nos. 50073 * F-0493 * C-28

DOCUMENT NOT CONSIDERED FINAL UNLESS ALL SIGNATURES COMPLETED

STATE OF NORTH CAROLINA
DEPARTMENT OF TRANSPORTATION
RALEIGH

SUBSTRUCTURE

BENT NO. 1 DETAILS

REVISIONS						SHEET NO.
NO.	BY:	DATE:	NO.	BY:	DATE:	S-32
1			3			TOTAL SHEETS
2			4			42

6/4/2021
X:\P\U030036006 Div 3 B-4590\Design\Structures\Working DGN\Final Plans\401_063_B4590_SMU_B1_S-32_640029.dgn
CuanyN

DocuSign Envelope ID: 067A235F-0381-4EA9-9E6C-859425BCECAB

NOTES

FOR SECTION CUTS AND VIEWS, SEE SHEET 2 OF 2.

FOR REINFORCING BILL OF MATERIAL, SEE SHEET 2 OF 2.

STIRRUPS AND U3 BARS IN CAP MAY BE SHIFTED AS NECESSARY TO AVOID ANCHOR BOLTS.

HOOKS ON "V" BARS MAY BE TURNED AS NECESSARY FOR PLACING REINFORCING STEEL.

ALL STEEL IN THE DRILLED SHAFTS IS INCLUDED IN THE PAY ITEMS FOR "EPOXY COATED REINFORCING STEEL" AND "EPOXY COATED SPIRAL COLUMN REINFORCING STEEL".

THE CONTRACTOR'S ATTENTION IS CALLED TO THE FACT THAT THE LONGITUDINAL REINFORCEMENT FOR THE DRILLED PIERS IS DETAILED WITH 3 FEET OF EXTRA LENGTH.

* INVERT ALTERNATE #5 S1 STIRRUP PAIRS.

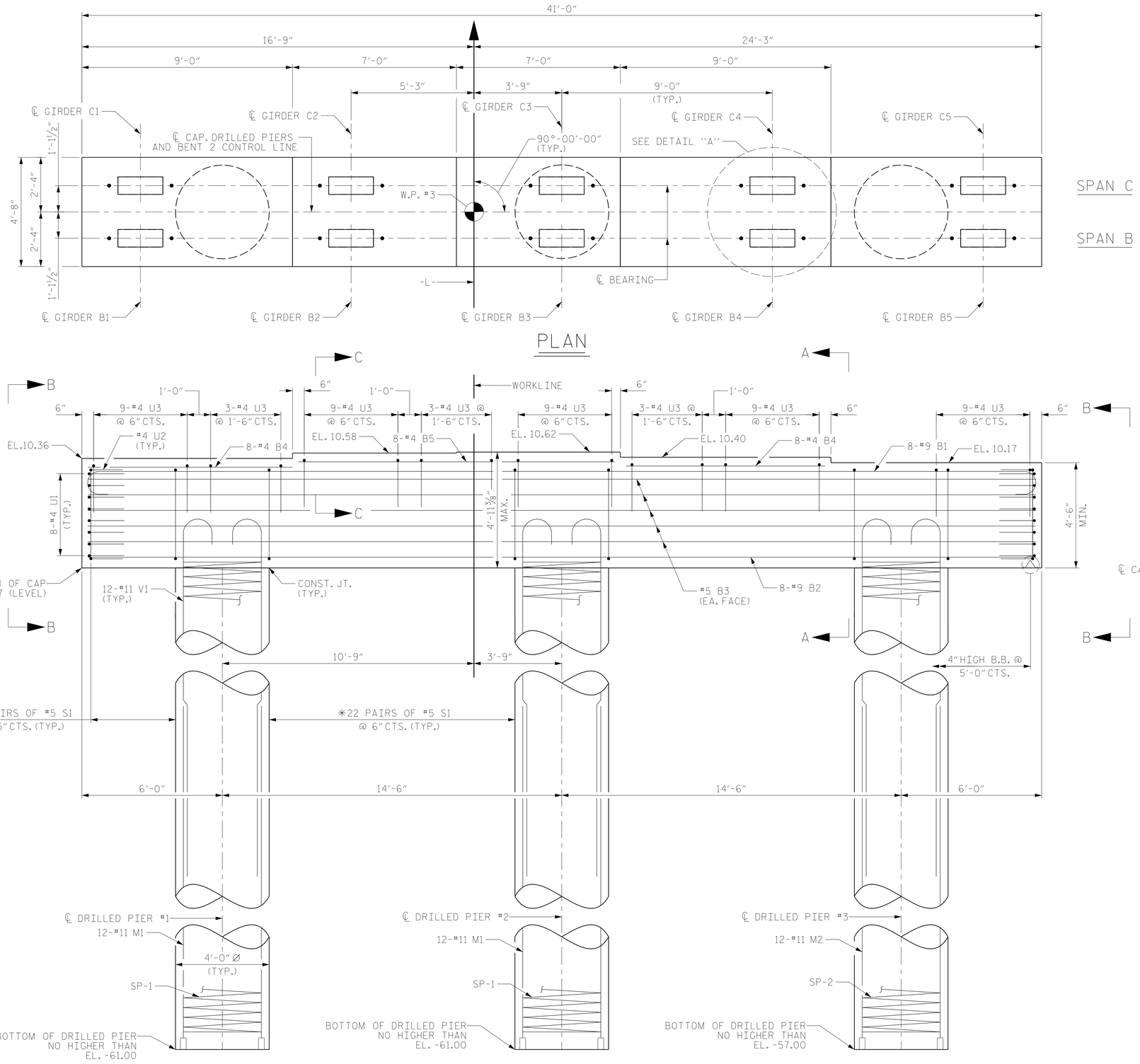

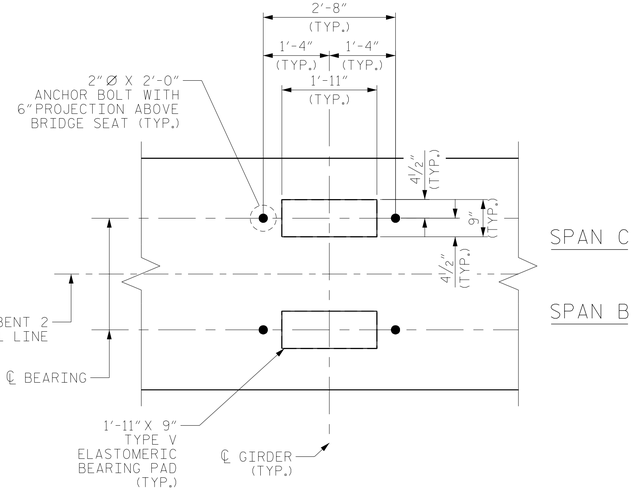

PROJECT NO. B-4590

NEW HANOVER COUNTY

STATION: 18+44.50 -L-

SHEET 1 OF 2

DRAWN BY : TWL DATE : 06/2018

CHECKED BY : MAL DATE : 08/2018

DESIGN ENGINEER OF RECORD: RLB DATE : 06/2021

6/4/2021
X:\P\1030036006 Div 3 B-4590\Design\Structures\Working DGN\FinalPlans\401_065_B4590_SMU_B2_S-33_640029.dgn
CuanyN

DOCUMENT NOT CONSIDERED FINAL UNLESS ALL SIGNATURES COMPLETED

NORTH CAROLINA PROFESSIONAL ENGINEER SEAL 18442 RICHARD LEON BOLLINGER, JR. 6/6/2021

RS&H Architects-Engineers-Planners, Inc.
8521 Six Forks Road, Suite 400
Raleigh, NC 27615
919-926-4100 FAX 919-846-9080
www.rsandh.com
North Carolina License Nos. 50073 * F-0493 * C-28

STATE OF NORTH CAROLINA
DEPARTMENT OF TRANSPORTATION
RALEIGH

SUBSTRUCTURE

BENT NO. 2

REVISIONS						SHEET NO.
NO.	BY:	DATE:	NO.	BY:	DATE:	S-33
1			3			TOTAL SHEETS
2			4			42

DocuSign Envelope ID: 067A235F-0381-4EA9-9E6C-859425BCECAB

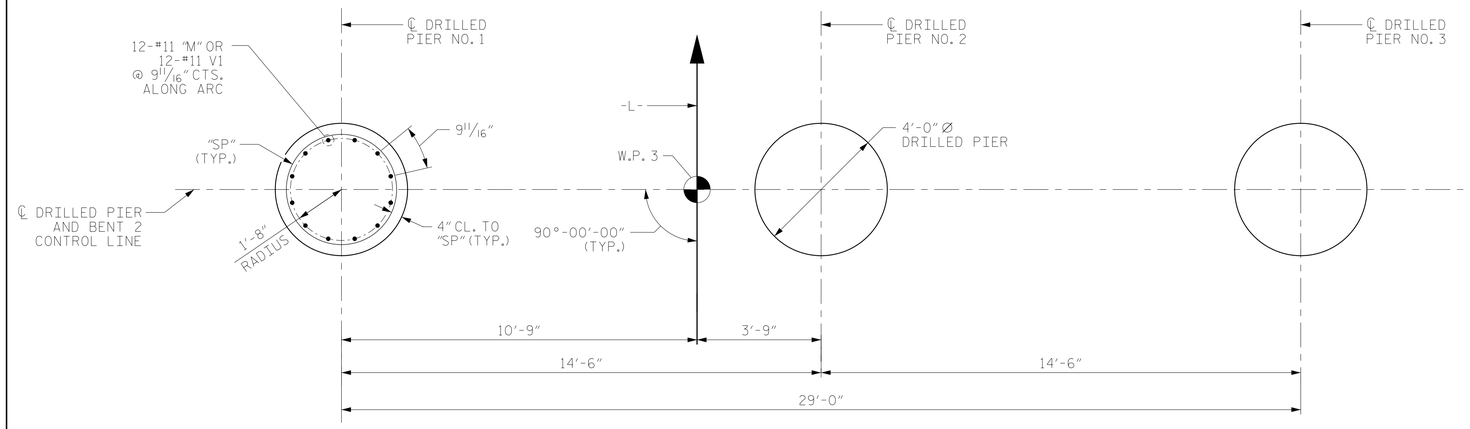

PLAN OF DRILLED PIERS

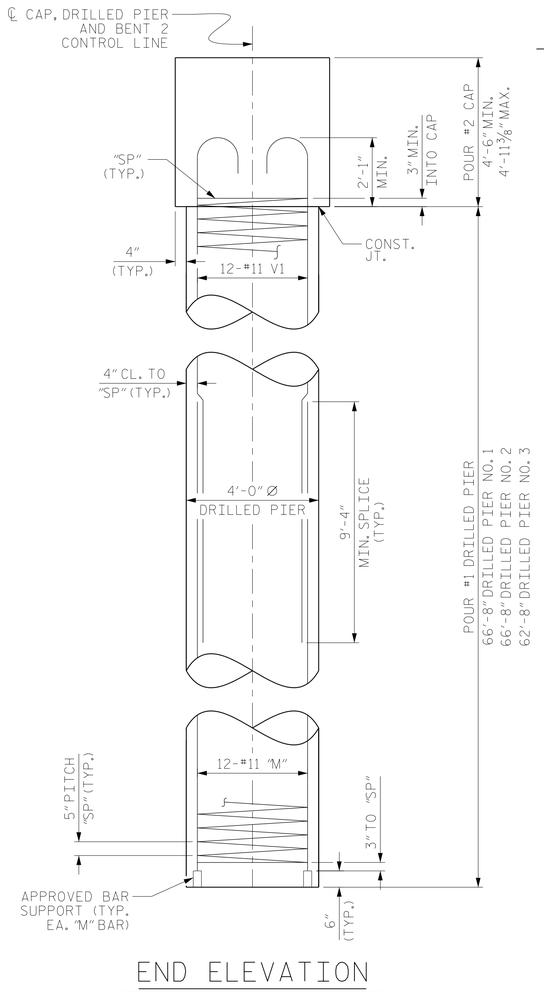

END ELEVATION

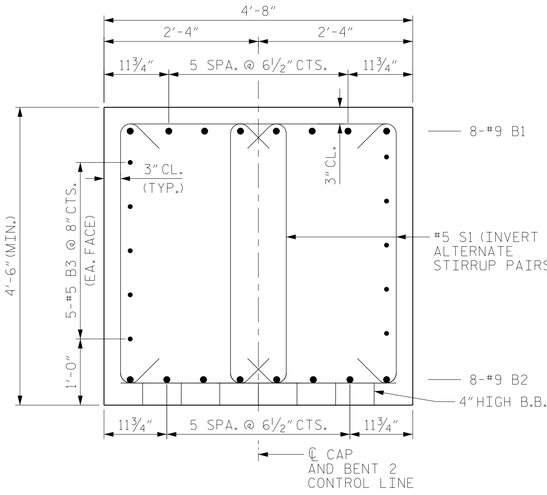

SECTION A-A

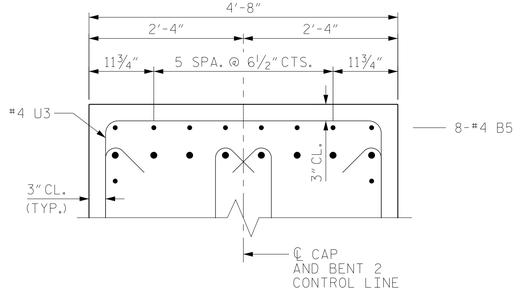

SECTION C-C

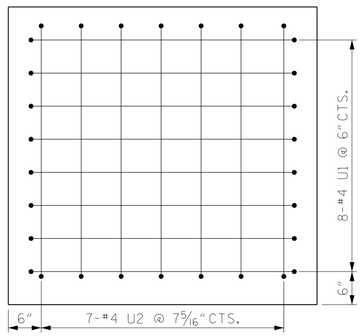

VIEW B-B

BAR TYPES

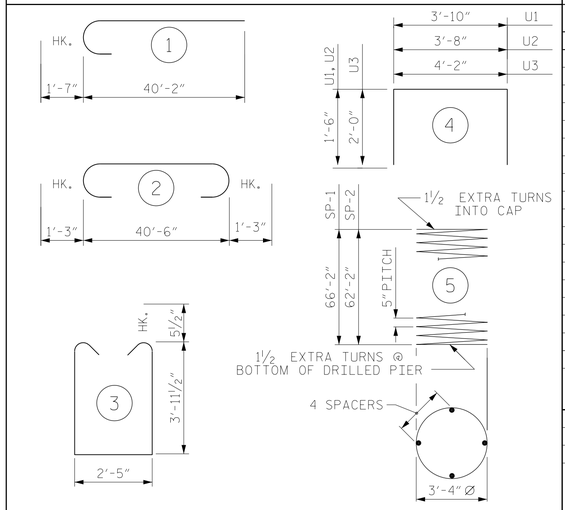

ALL BAR DIMENSIONS ARE OUT TO OUT

BILL OF MATERIAL
FOR BENT 2

BAR	NO.	SIZE	TYPE	LENGTH	WEIGHT
B1	8	#9	2	43'-0"	1170
B2	8	#9	STR	40'-6"	1102
B3	10	#5	STR	40'-6"	422
B4	16	#4	STR	9'-0"	96
B5	8	#4	STR	13'-6"	72
M1	24	#11	STR	40'-4"	5143
M2	12	#11	STR	36'-4"	2316
S1	124	#5	3	11'-3"	1455
U1	16	#4	4	6'-10"	73
U2	14	#4	4	6'-8"	62
U3	54	#4	4	8'-2"	295
V1	36	#11	1	40'-4"	7714

EPOXY COATED REINFORCING STEEL (FOR BENT 2) 19,920 LBS.

SP-1	2	**	5	3342'-8"	3486
SP-2	1	**	5	1570'-9"	1638

EPOXY COATED SPIRAL COLUMN REINFORCING STEEL (FOR BENT 2) 5,124 LBS.

** THE SP-1 & SP-2 SPIRAL REINFORCING STEEL SHALL BE W31 OR D-31 COLD DRAWN WIRE OR #5 PLAIN OR DEFORMED BAR

CLASS AA CONCRETE BREAKDOWN (FOR BENT 2)

POUR #2 (CAP)	33.6 C.Y.
TOTAL CLASS AA CONCRETE	33.6 C.Y.

DRILLED PIERS: (FOR BENT 2)

DRILLED PIER CONCRETE POUR #1 (DRILLED PIERS)	91.3 C.Y.
4'-0" Ø DRILLED PIER NOT IN SOIL	0.0 LIN. FT.
4'-0" Ø DRILLED PIER IN SOIL	196.0 LIN. FT.
PERMANENT STEEL CASING FOR 4'-0" Ø DRILLED PIER	103.0 LIN. FT.
SID INSPECTION	1 EA.
△ CSL TUBES	802.1 LIN. FT.

△ NO SEPERATE PAYMENT WILL BE MADE FOR CSL TUBES. CSL TUBES WILL BE INCLUDED IN THE UNIT BID PRICE FOR DRILLED PIERS.

PROJECT NO. B-4590
NEW HANOVER COUNTY
STATION: 18+44.50 -L-

SHEET 2 OF 2

DRAWN BY :	TWL	DATE :	06/2018
CHECKED BY :	MAL	DATE :	08/2018
DESIGN ENGINEER OF RECORD:	RLB	DATE :	06/2021

6/4/2021
X:\P\1030036006 Div 3 B-4590\Design\Structures\Working DGN\FinalPlans\401_067_B4590_SMU_B2_S-34_640029.dgn
CuanyN

NORTH CAROLINA PROFESSIONAL SEAL 18442 ENGINEER RICHARD LEON BOLTINGER, JR.
6/6/2021

RS&H
RS&H Architects-Engineers-Planners, Inc.
8521 Six Forks Road, Suite 400
Raleigh, NC 27615
919-926-4100 FAX 919-846-9080
www.rsandh.com
North Carolina License Nos. 50073 * F-0493 * C-28

DOCUMENT NOT CONSIDERED FINAL UNLESS ALL SIGNATURES COMPLETED

STATE OF NORTH CAROLINA
DEPARTMENT OF TRANSPORTATION
RALEIGH

SUBSTRUCTURE

BENT NO. 2 DETAILS

REVISIONS						SHEET NO.
NO.	BY:	DATE:	NO.	BY:	DATE:	S-34
1			3			TOTAL SHEETS
2			4			42

DocuSign Envelope ID: 067A235F-0381-4EA9-9E6C-859425BCECAB

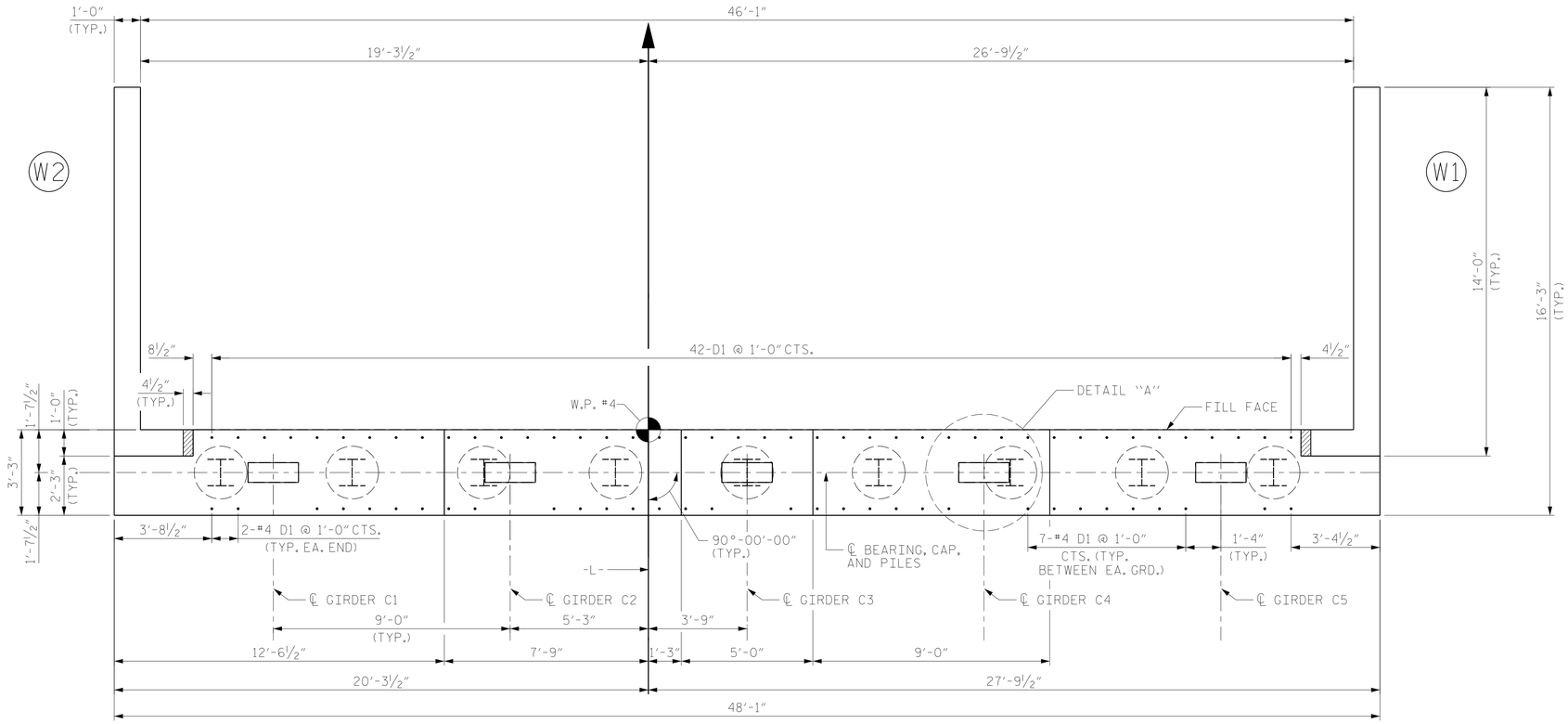

PLAN

NOTES

FOR SECTION A-A, SEE SHEET 4 OF 4.

#4 D1 BARS MAY BE SHIFTED SLIGHTLY TO AVOID STIRRUPS IN CAP AND STEPS IN CAP.

SEE SUPERSTRUCTURE SHEETS FOR UPPER PART OF INTEGRAL END BENT DETAILS.

THE CONCRETE IN THE SHADED AREA OF THE WING SHALL BE POURED AFTER THE CONCRETE BARRIER IS CAST IF SLIP FORMING IS USED.

METALLIZE PILES IN ACCORDANCE WITH TABLE 2 OF THE DEPARTMENT THERMAL SPRAYED COATINGS (METALLIZATION) PROGRAM. FOR THERMAL SPRAYED COATINGS, SEE SPECIAL PROVISIONS.

AFTER DRIVING THE PILES, APPLY 1 COAT EACH OF 1080-09 BROWN AND 1080-09 GRAY PAINT TO THE EMBEDDED SECTION OF THE METALLIZED PILE PRIOR TO CONCRETE EMBEDMENT IN ACCORDANCE WITH SECTION 442 OF THE STANDARD SPECIFICATIONS.

THE TOP SURFACE OF THE END BENT CAP AND WINGS, EXCLUDING THE BEARING AREA, SHALL BE RAKED TO A DEPTH OF ¼".

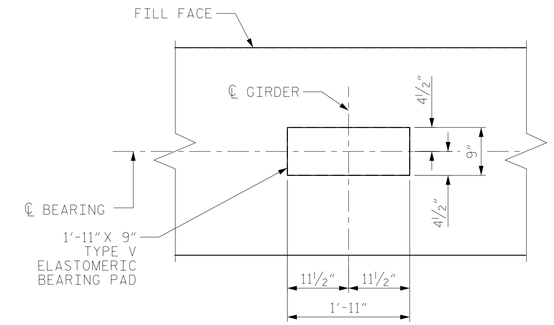

DETAIL "A"

DIMENSIONS TYPICAL FOR EACH BEARING
PILE NOT SHOWN FOR CLARITY
DOWELS NOT SHOWN FOR CLARITY

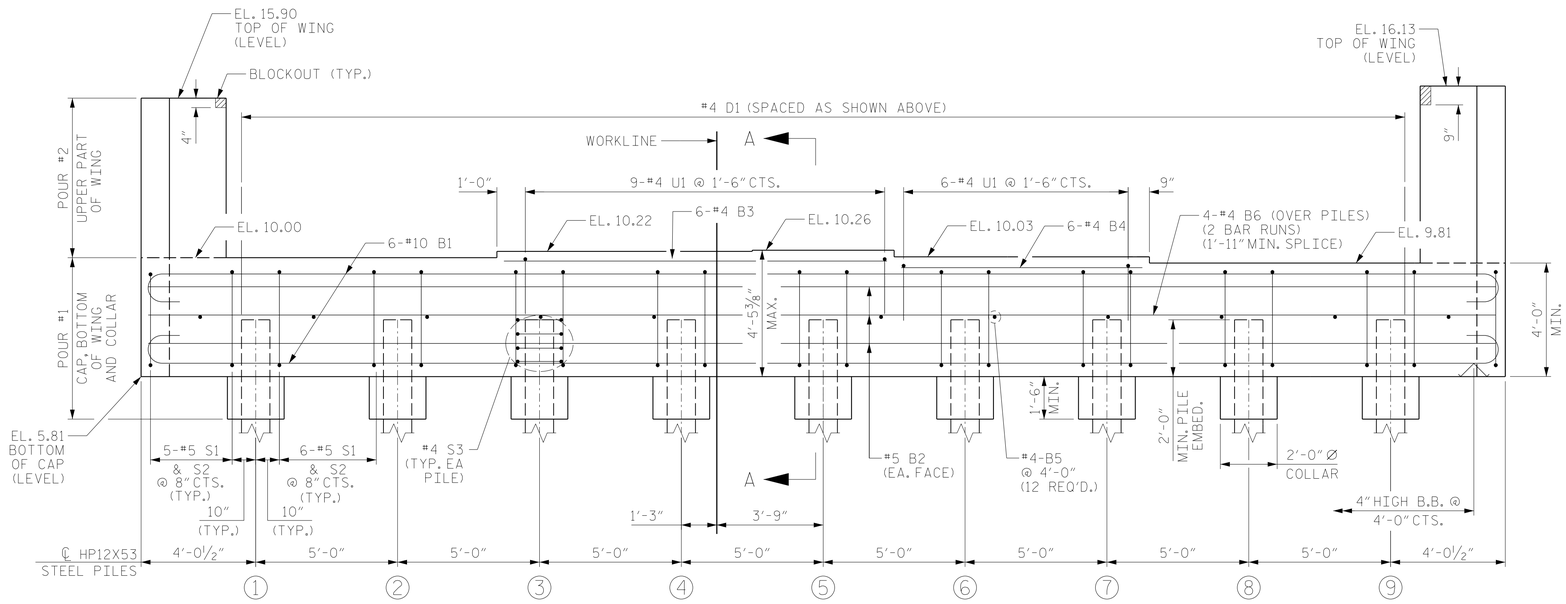

ELEVATION

PROJECT NO. B-4590
NEW HANOVER COUNTY
STATION: 18+44.50 -L-

SHEET 1 OF 4

STATE OF NORTH CAROLINA
DEPARTMENT OF TRANSPORTATION
RALEIGH

SUBSTRUCTURE

INTEGRAL END BENT NO. 2

NORTH CAROLINA PROFESSIONAL ENGINEER SEAL 18442 RICHARD LEON BOLLINGER, JR.
6/6/2021

RS&H

RS&H Architects-Engineers-Planners, Inc.
8521 Six Forks Road, Suite 400
Raleigh, NC 27615
919-926-4100 FAX 919-846-9080
www.rsandh.com
North Carolina License Nos. 50073 * F-0493 * C-28

REVISIONS						SHEET NO.
NO.	BY:	DATE:	NO.	BY:	DATE:	S-35
1			3			TOTAL SHEETS
2			4			42

DRAWN BY : TWL DATE : 06/2018
CHECKED BY : MAL DATE : 08/2018
DESIGN ENGINEER OF RECORD: RLB DATE : 06/2021

DOCUMENT NOT CONSIDERED FINAL UNLESS ALL SIGNATURES COMPLETED

6/4/2021
X:\P\1030036006 Div 3 B-4590\Design\Structures\Working DGN\Final Plans\401_069_B4590_SMU_E2_S-35_640029.dgn
CuanyN

DocuSign Envelope ID: 067A235F-0381-4EA9-9E6C-859425BCECAB

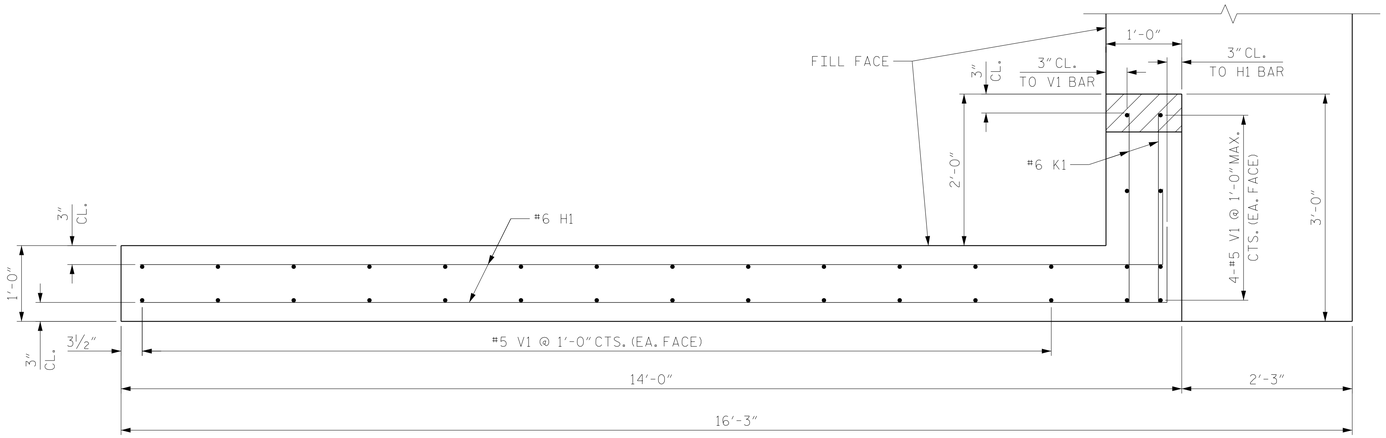

PLAN OF WING - W2

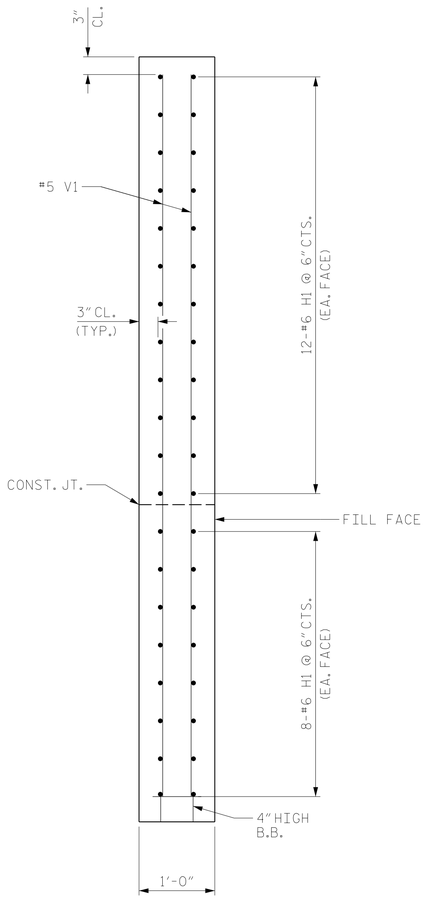

SECTION D-D

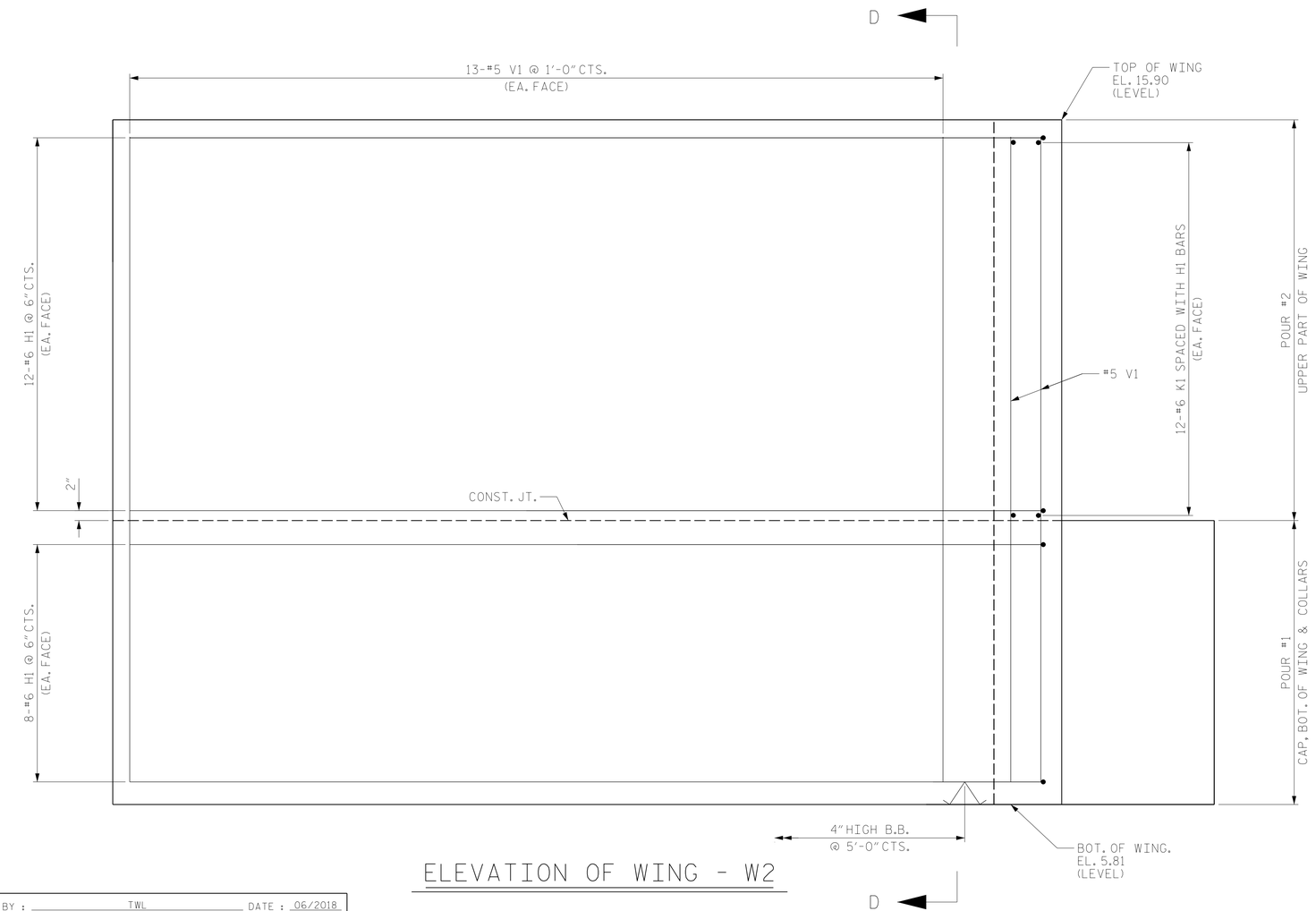

ELEVATION OF WING - W2

PROJECT NO. B-4590
NEW HANOVER COUNTY
STATION: 18+44.50 -L-

SHEET 2 OF 4

NORTH CAROLINA PROFESSIONAL ENGINEER SEAL 18422 RICHARD LEON BOLLINGER JR. 6/6/2021

RS&H

RS&H Architects-Engineers-Planners, Inc.
8521 Six Forks Road, Suite 400
Raleigh, NC 27615
919-926-4100 FAX 919-846-9080
www.rsandh.com
North Carolina License Nos. 50073 * F-0493 * C-28

STATE OF NORTH CAROLINA
DEPARTMENT OF TRANSPORTATION
RALEIGH

SUBSTRUCTURE

INTEGRAL
END BENT NO. 2

REVISIONS						SHEET NO.
NO.	BY:	DATE:	NO.	BY:	DATE:	S-36
1			3			TOTAL SHEETS
2			4			42

DRAWN BY : TWL DATE : 06/2018
CHECKED BY : MAL DATE : 08/2018
DESIGN ENGINEER OF RECORD: RLB DATE : 06/2021

DOCUMENT NOT CONSIDERED FINAL UNLESS ALL SIGNATURES COMPLETED

6/4/2021
X:\P\10300036006 Div 3 B-4590\Design\Structures\Working DGN\FinalPlans\401_071_B4590_SMU_E2_S-36_640029.dgn
CuanyN

DocuSign Envelope ID: 067A235F-0381-4EA9-9E6C-859425BCECAB

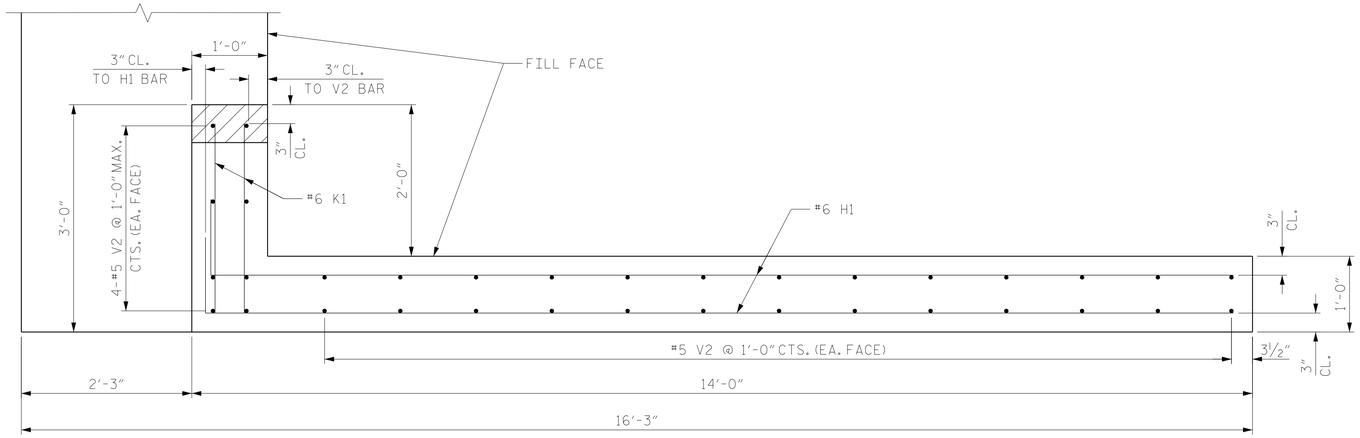

PLAN OF WING - W1

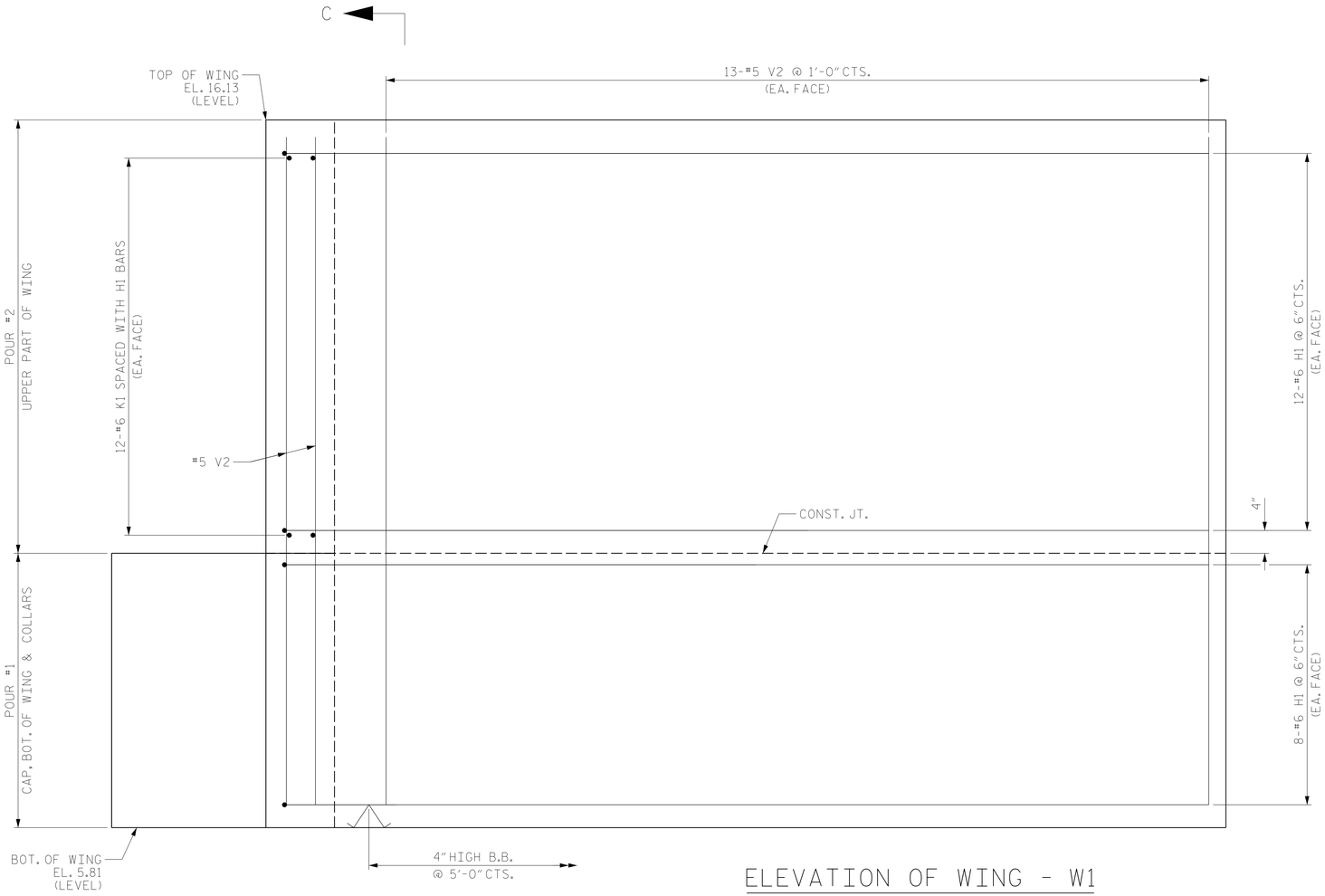

ELEVATION OF WING - W1

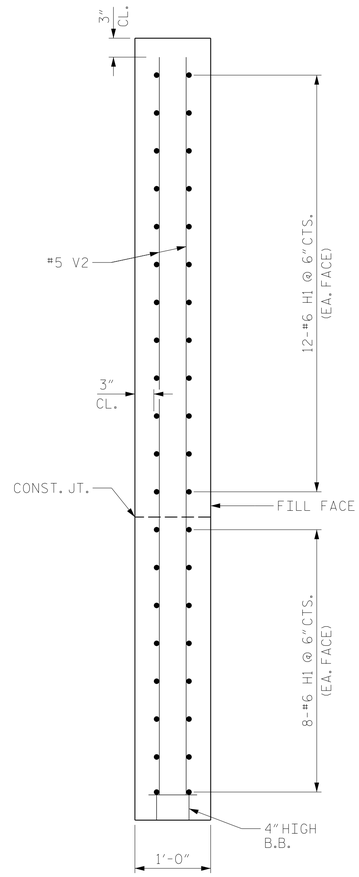

SECTION C-C

PROJECT NO. B-4590

NEW HANOVER COUNTY

STATION: 18+44.50 -L-

SHEET 3 OF 4

NORTH CAROLINA PROFESSIONAL SEAL 18442 ENGINEER RICHARD LEON BOLLINGER JR.

6/6/2021

RS&H

RS&H Architects-Engineers-Planners, Inc.
8521 Six Forks Road, Suite 400
Raleigh, NC 27615
919-926-4100 FAX 919-846-9080
www.rsandh.com
North Carolina License Nos. 50073 * F-0493 * C-28

STATE OF NORTH CAROLINA
DEPARTMENT OF TRANSPORTATION
RALEIGH

SUBSTRUCTURE

INTEGRAL
END BENT NO. 2

REVISIONS						SHEET NO.
NO.	BY:	DATE:	NO.	BY:	DATE:	S-37
1			3			TOTAL SHEETS
2			4			42

DRAWN BY : TWL DATE : 06/2018
CHECKED BY : MAL DATE : 08/2018
DESIGN ENGINEER OF RECORD: RLB DATE : 06/2021

DOCUMENT NOT CONSIDERED FINAL UNLESS ALL SIGNATURES COMPLETED

6/4/2021
X:\P\10300036006 Div 3 B-4590\Design\Structures\Working DGN\FinalPlans\401_073_B4590_SMU_E2_S-37_640029.dgn
CuanyN

DocuSign Envelope ID: 067A235F-0381-4EA9-9E6C-859425BCECAB

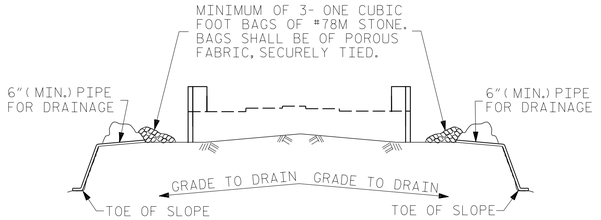

BAGGED STONE AND PIPE SHALL BE PLACED IMMEDIATELY AFTER COMPLETION OF END BENT EXCAVATION. PIPE MAY BE EITHER CONCRETE, CORRUGATED STEEL, CORRUGATED ALUMINUM ALLOY, OR CORRUGATED PLASTIC. PERFORATED PIPE WILL NOT BE ALLOWED.

BAGGED STONE SHALL REMAIN IN PLACE UNTIL THE ENGINEER DIRECTS THAT IT BE REMOVED. THE CONTRACTOR SHALL REMOVE AND DISPOSE OF SILT ACCUMULATIONS AT BAGGED STONE WHEN SO DIRECTED BY THE ENGINEER. BAGS SHALL BE REMOVED AND REPLACED WHENEVER THE ENGINEER DETERMINES THAT THEY HAVE DETERIORATED AND LOST THEIR EFFECTIVENESS.

NO SEPARATE PAYMENT WILL BE MADE FOR THIS WORK AND THE ENTIRE COST OF THIS WORK SHALL BE INCLUDED IN THE UNIT CONTRACT PRICE BID FOR THE SEVERAL PAY ITEMS.

TEMPORARY DRAINAGE AT END BENT

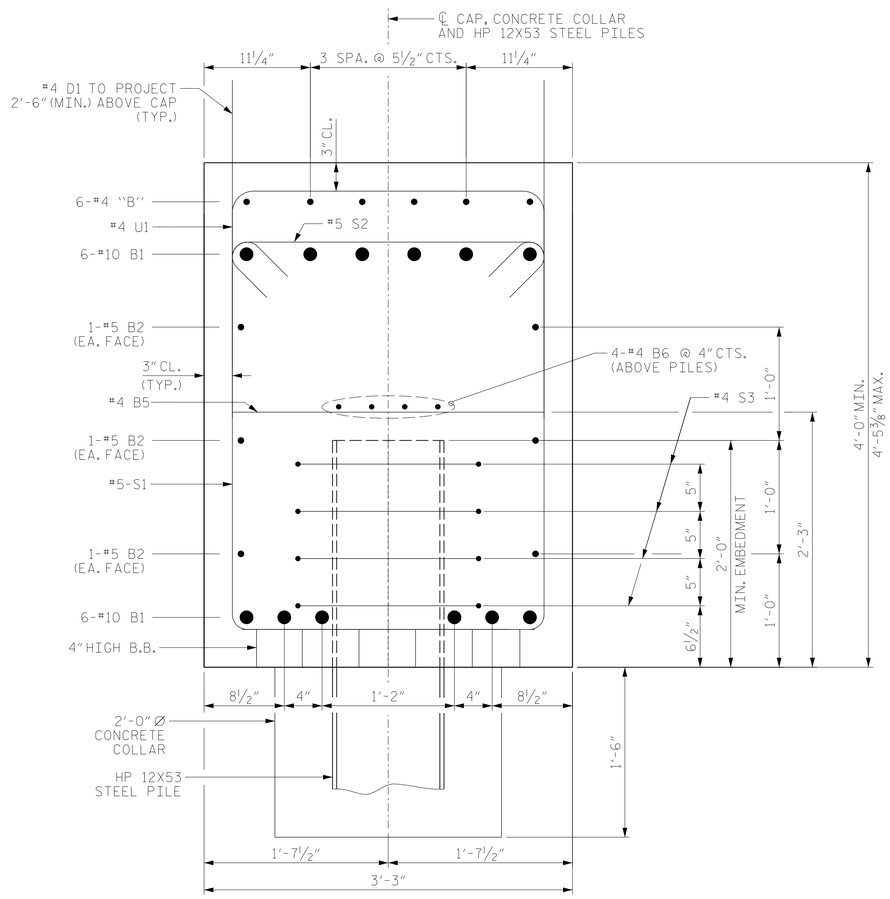

SECTION A-A

* THE TOP SURFACE OF THE END BENT CAP & WINGS, EXCLUDING THE BEARING AREA, SHALL BE RAKED TO A DEPTH OF ¼".

BAR TYPES

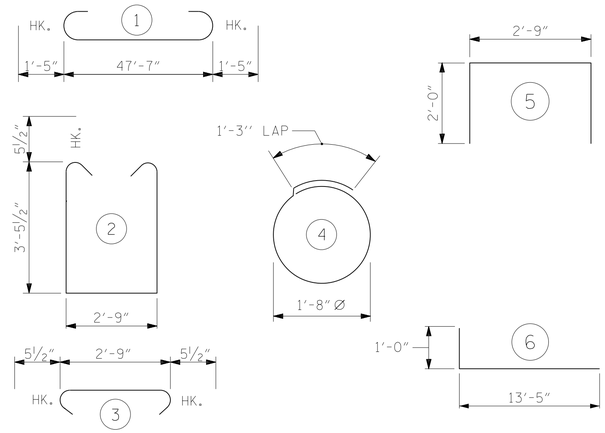

ALL BAR DIMENSIONS ARE OUT TO OUT.

BILL OF MATERIAL

END BENT NO. 2

BAR	NO.	SIZE	TYPE	LENGTH	WEIGHT
B1	12	#10	1	50'-5"	2603
B2	6	#5	STR	47'-7"	298
B3	6	#4	STR	13'-6"	54
B4	6	#4	STR	9'-0"	36
B5	12	#4	STR	2'-9"	22
B6	8	#4	STR	24'-9"	132
D1	74	#4	STR	4'-6"	222
H1	80	#6	6	14'-5"	1732
K1	48	#6	STR	2'-6"	180
S1	58	#5	2	10'-7"	640
S2	58	#5	3	3'-8"	222
S3	36	#4	4	6'-6"	156
U1	15	#4	5	6'-9"	68
V1	34	#5	STR	9'-6"	337
V2	34	#5	STR	9'-8"	343

EPOXY COATED REINFORCING STEEL	7,045 LBS.
CLASS AA CONCRETE	
POUR #1 CAP, CONCRETE COLLARS & LOWER PART OF WINGS	30.1 C.Y.
POUR #2 UPPER PART OF WINGS	7.4 C.Y.
TOTAL CLASS AA CONCRETE	37.5 C.Y.
HP 12 X 53 STEEL PILES NO. 9	415.0 LIN. FT.
STEEL PILE POINTS	NO. 9
PILE DRIVING EQUIPMENT SETUP	NO. 9
PREDRILLING FOR PILES	75.0 LIN. FT.
PILE REDRIVES	5 EA.

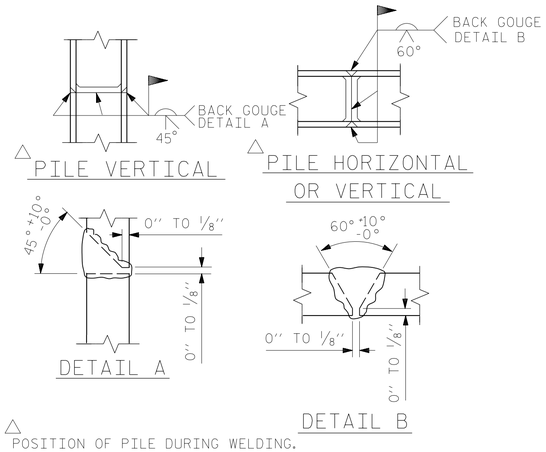

△ POSITION OF PILE DURING WELDING.

PILE SPLICE DETAILS

PROJECT NO. B-4590
NEW HANOVER COUNTY
STATION: 18+44.50 -L-

SHEET 4 OF 4

NORTH CAROLINA PROFESSIONAL ENGINEER SEAL 18442 RICHARD LEON BOLLINGER, JR. 6/6/2021

RS&H

RS&H Architects-Engineers-Planners, Inc.
8521 Six Forks Road, Suite 400
Raleigh, NC 27615
919-926-4100 FAX 919-846-9080
www.rsandh.com
North Carolina License Nos. 50073 * F-0493 * C-28

STATE OF NORTH CAROLINA
DEPARTMENT OF TRANSPORTATION
RALEIGH
SUBSTRUCTURE

INTEGRAL END BENT NO. 2

REVISIONS						SHEET NO.
NO.	BY:	DATE:	NO.	BY:	DATE:	S-38
1			3			TOTAL SHEETS
2			4			42

DRAWN BY : NSC DATE : 06/2018
CHECKED BY : MAL DATE : 08/2018
DESIGN ENGINEER OF RECORD: RLB DATE : 06/2021

DOCUMENT NOT CONSIDERED FINAL UNLESS ALL SIGNATURES COMPLETED

6/4/2021
X:\P\1030036006 Div 3 B-4590\Design\Structures\Working DGN\FinalPlans\401_075_B4590_SMU_E2_S-38_640029.dgn
CuonyN

DocuSign Envelope ID: 067A235F-0381-4EA9-9E6C-859425BCECAB

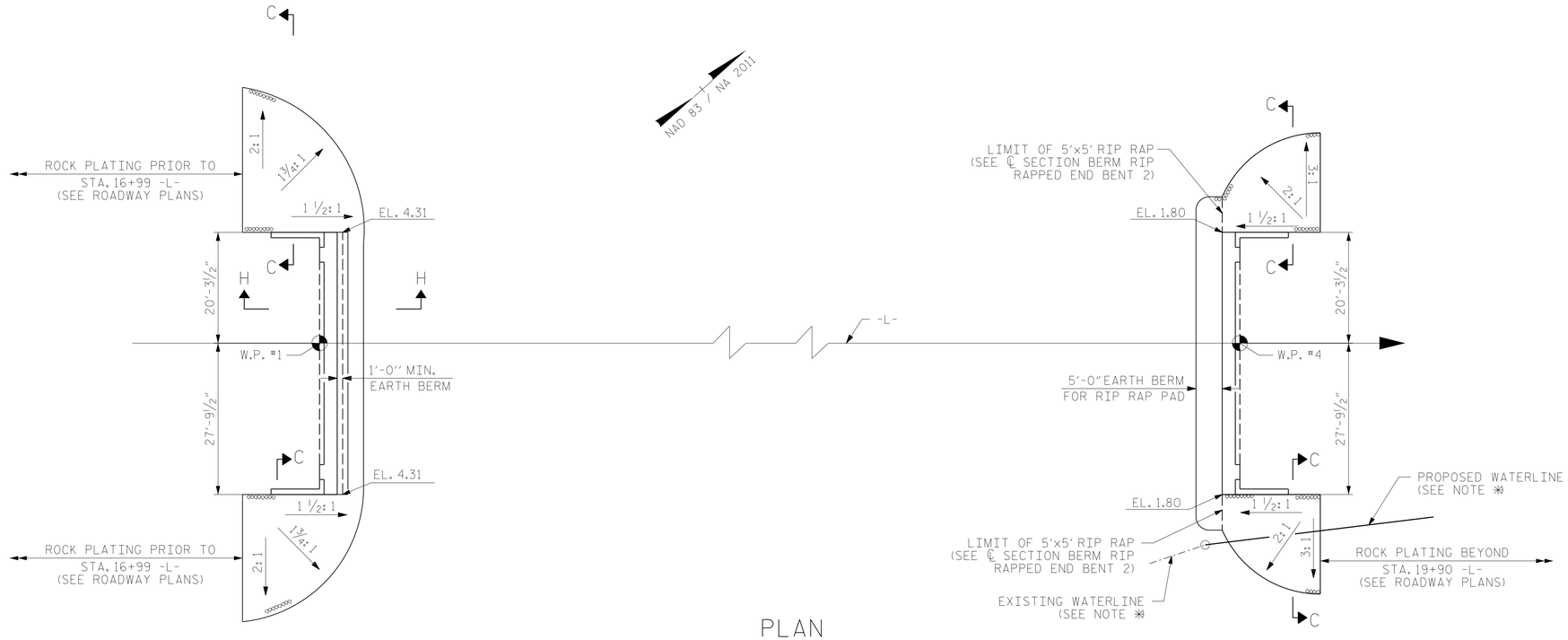

PLAN

NOTES

FOR BERM WIDTH DIMENSIONS, SEE GENERAL DRAWING.

*ENGINEER TO VERIFY LOCATION OF WATERLINE PRIOR TO INSTALLING RIP RAP AT NORTHEAST CORNER OF END BENT 2. CARE SHALL BE TAKEN WHEN INSTALLING RIP RAP OVER AND AROUND THE PROPOSED WATERLINE.

ESTIMATED QUANTITIES

BRIDGE @ STA. 18+44.50 -L-	RIP RAP CLASS II (2'-0" THICK)	GEOTEXTILE FOR DRAINAGE
	TONS	SQUARE YARDS
END BENT 1	260	290
END BENT 2	200	205

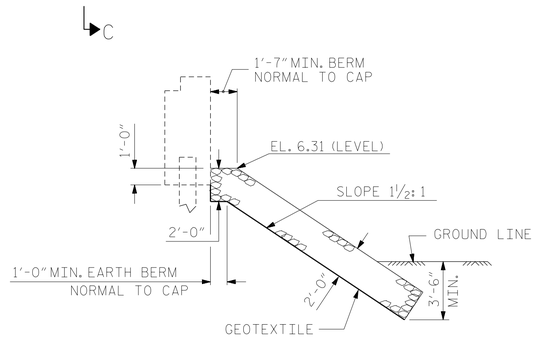

℄ SECTION
BERM RIP RAPPED
END BENT 1

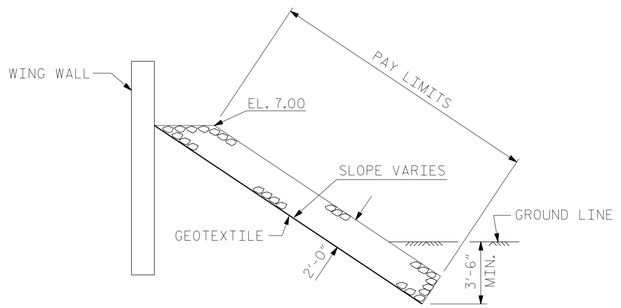

SECTION C-C

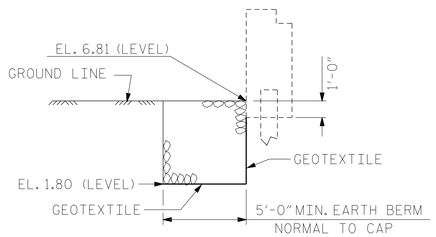

℄ SECTION
BERM RIP RAPPED
END BENT 2

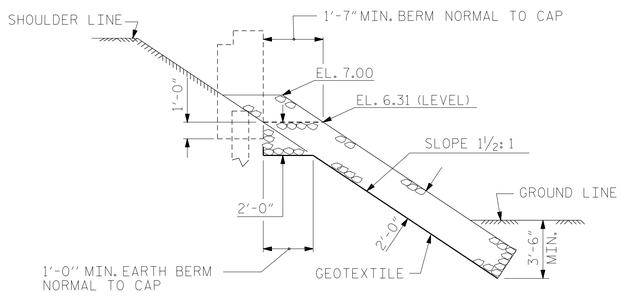

SECTION H-H
END BENT 1

PROJECT NO. B-4590
NEW HANOVER COUNTY
STATION: 18+44.50 -L-

DRAWN BY : NSC DATE : 06/2018
CHECKED BY : PDS DATE : 08/2018
DESIGN ENGINEER OF RECORD: RLB DATE : 06/2021

6/4/2021
X:\P\1030036006 Div 3 B-4590\Design\Structures\Working DGN\FinalPlans\401_077_B4590_SMU_RR_S-39_640029.dgn
CuanyN

NORTH CAROLINA PROFESSIONAL SEAL 18442 ENGINEER RICHARD LEON BOLLINGER JR
6/6/2021

RS&H
RS&H Architects-Engineers-Planners, Inc.
8521 Six Forks Road, Suite 400
Raleigh, NC 27615
919-926-4100 FAX 919-846-9080
www.rsandh.com
North Carolina License Nos. 50073 * F-0493 * C-28

DOCUMENT NOT CONSIDERED FINAL UNLESS ALL SIGNATURES COMPLETED

STATE OF NORTH CAROLINA
DEPARTMENT OF TRANSPORTATION
RALEIGH

RIP RAP DETAILS

REVISIONS						SHEET NO.
NO.	BY:	DATE:	NO.	BY:	DATE:	S-39
1			3			TOTAL SHEETS
2			4			42

DocuSign Envelope ID: 067A235F-0381-4EA9-9E6C-859425BCECAB

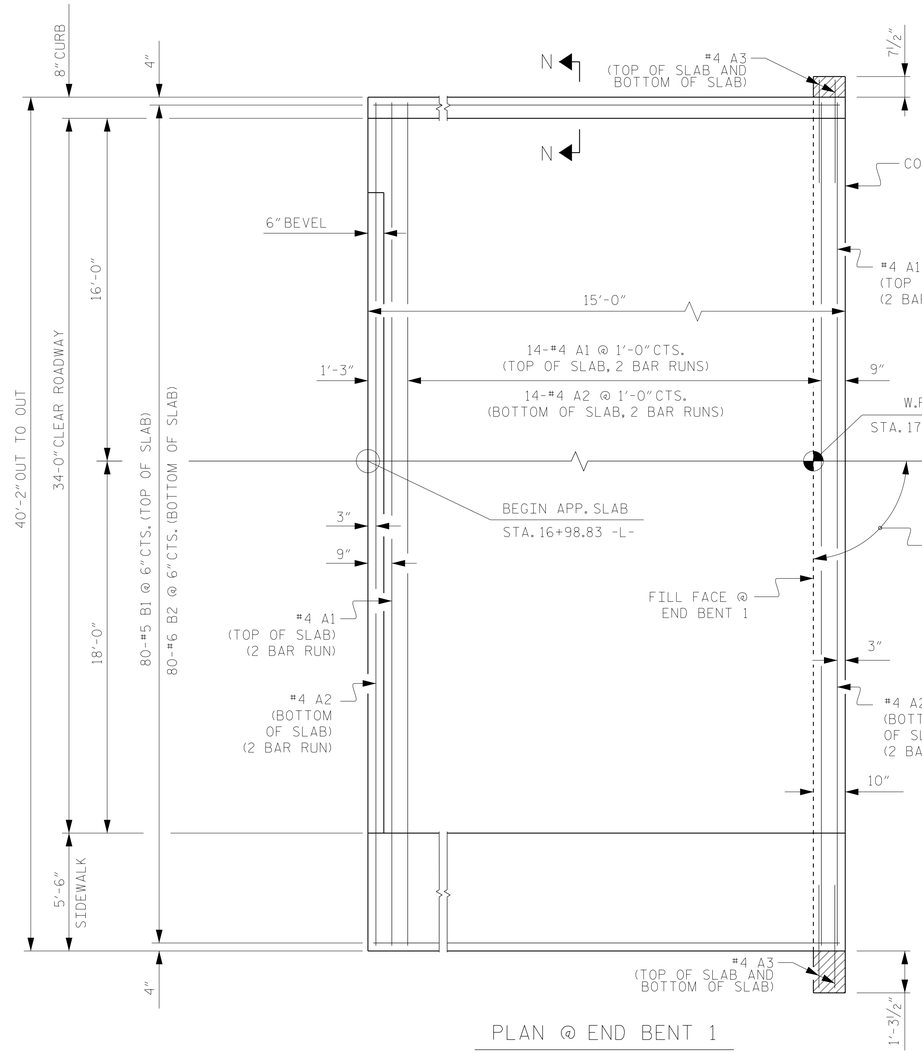

PLAN @ END BENT 1

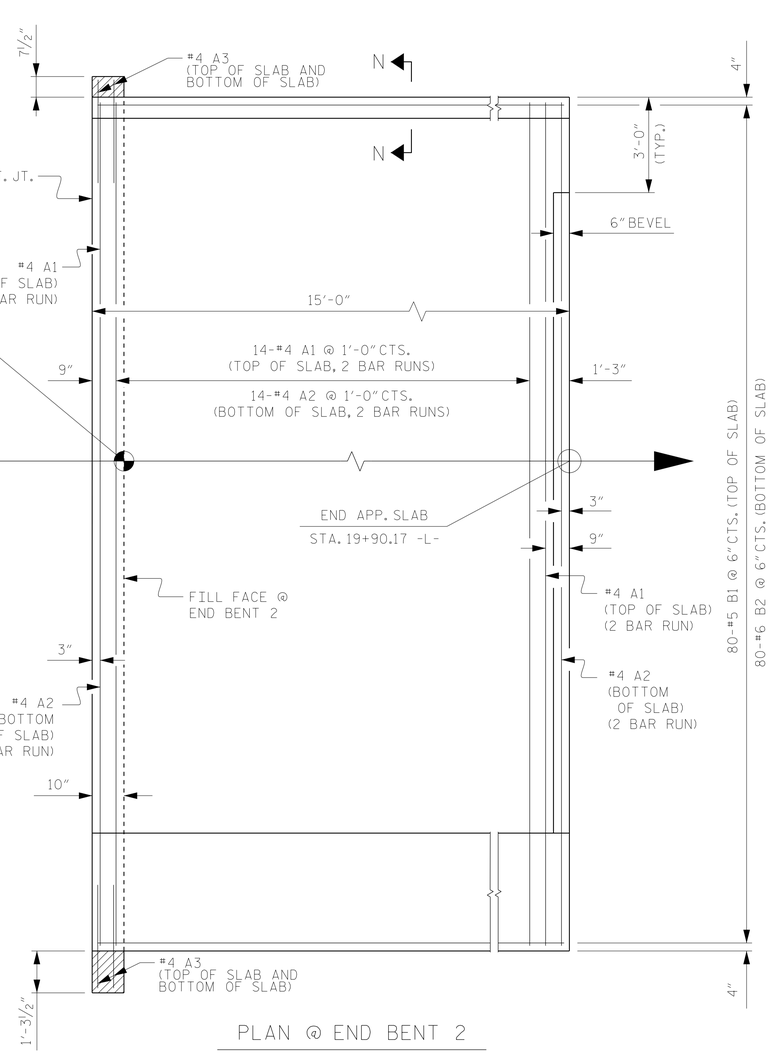

PLAN @ END BENT 2

NOTES

FOR NOTES, SEE SHEET 2 OF 3 AND SHEET 3 OF 3.

FOR SECTION N-N, SEE SHEET 2 OF 3.

PLAN OF APPROACH SLABS

DIMENSIONS SHOWN ARE TYPICAL FOR BOTH APPROACH SLABS

CONCRETE TO BE FILLED IN DURING CONSTRUCTION OF APPROACH SLAB

PROJECT NO. B-4590

NEW HANOVER COUNTY

STATION: 18+44.50 -L-

SHEET 1 OF 3

NORTH CAROLINA
PROFESSIONAL
SEAL
18442
ENGINEER
RICHARD LEON BOLLINGER JR.
6/6/2021

RS&H

RS&H Architects-Engineers-Planners, Inc.
8521 Six Forks Road, Suite 400
Raleigh, NC 27615
919-926-4100 FAX 919-846-9080
www.rsandh.com
North Carolina License Nos. 50073 * F-0493 * C-28

STATE OF NORTH CAROLINA
DEPARTMENT OF TRANSPORTATION
RALEIGH

BRIDGE APPROACH SLAB
FOR INTEGRAL ABUTMENT
WITH FLEXIBLE PAVEMENT

REVISIONS						SHEET NO.
NO.	BY:	DATE:	NO.	BY:	DATE:	S-40
1			3			TOTAL SHEETS
2			4			42

DRAWN BY : NSC DATE : 06/2018
CHECKED BY : PDS DATE : 07/2018
DESIGN ENGINEER OF RECORD: RLB DATE : 06/2021

DOCUMENT NOT CONSIDERED FINAL UNLESS ALL SIGNATURES COMPLETED

6/4/2021
X:\P\1030036006 Div 3 B-4590\Design\Structures\Working DGN\FinalPlans\401_079_B4590_SMU_AS_S-40_640029.dgn
CuanyN

DocuSign Envelope ID: 067A235F-0381-4EA9-9E6C-859425BCECAB

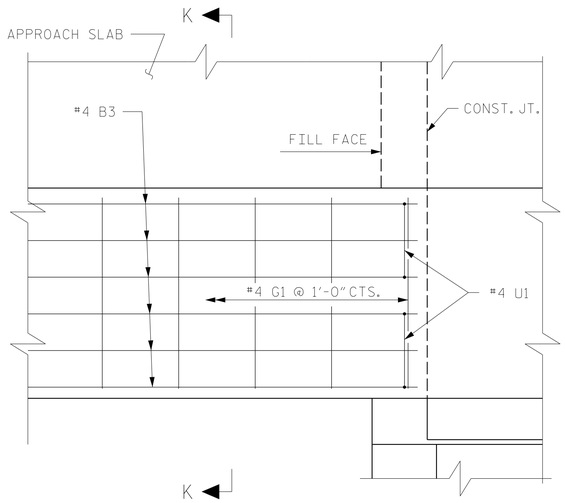

PLAN

END BENT 1 SHOWN, END BENT 2 SIMILAR

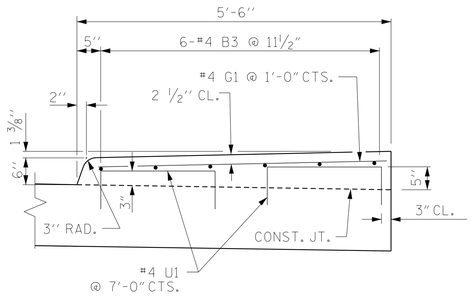

SECTION K-K

U1 BARS MAY BE PUSHED INTO GREEN CONCRETE AFTER SLAB HAS BEEN SCREEDED OFF

NOTES

APPROACH SLAB SHALL NOT BE CONSTRUCTED PRIOR TO COMPLETION OF THE BRIDGE DECK.

FOR BRIDGE APPROACH FILL INCLUDING GEOTEXTILE, 6"Ø DRAINAGE PIPE, AND SELECT MATERIAL, SEE ROADWAY PLANS.

GEOTEXTILE SHALL BE TYPE 1 IN ACCORDANCE WITH THE STANDARD SPECIFICATIONS SECTION 1056.

SELECT MATERIAL BACKFILL (CLASS V OR CLASS VI) SHALL BE IN ACCORDANCE WITH STANDARD SPECIFICATIONS SECTION 1016.

SELECT MATERIAL BACKFILL IS TO BE CONTINUOUS ALONG FILL FACE OF BACKWALL FROM OUTSIDE EDGE TO OUTSIDE EDGE OF APPROACH SLAB.

FOR THE 6"Ø DRAINAGE PIPE OUTLET(S), SEE ROADWAY STANDARD DRAWINGS.

AREA BETWEEN THE WINGWALL AND APPROACH SLAB SHALL BE GRADED TO DRAIN THE WATER AWAY FROM THE FILL FACE OF THE BRIDGE AND SHALL BE PAVED. SEE ROADWAY PLANS.

THE JOINT OPENING AT THE APPROACH SLAB/DECK INTERFACE SHALL BE SAWED NO MORE THAN 12 HOURS AFTER THE APPROACH SLAB IS CAST. THE JOINT SHALL BE CLEANED OF ALL DEBRIS BEFORE THE SEALANT IS APPLIED. THE JOINT SEALER MATERIAL SHALL CONFORM TO THE REQUIREMENTS OF SECTION 1028-3 OF THE STANDARD SPECIFICATIONS.

AT THE CONTRACTORS OPTION, "TYPE A - ALTERNATE APPROACH FILL" IN LIEU OF "TYPE I - STANDARD APPROACH FILL" MAY BE CONSTRUCTED AT NO ADDITIONAL COST TO THE DEPARTMENT. SEE SHEET 2 OF 2 FOR DETAILS AND NOTES.

BILL OF MATERIAL

FOR ONE APPROACH SLAB (2 REQ'D)

BAR	NO.	SIZE	TYPE	LENGTH	WEIGHT
✳ A1	32	#4	STR	20'-10"	445
✳ A2	32	#4	STR	20'-10"	445
✳ A3	16	#4	STR	3'-0"	32
✳ B1	80	#5	STR	14'-0"	1168
✳ B2	80	#6	STR	14'-6"	1742
✳ EPOXY COATED REINFORCING STEEL					3832 LBS.
CLASS AA CONCRETE					26.0 CU. YDS.

SIDEWALK FOR ONE APPROACH SLAB (2 REQ'D)

BAR	NO.	SIZE	TYPE	LENGTH	WEIGHT
✳ B3	6	#4	STR	14'-6"	58
✳ G1	15	#4	STR	5'-0"	50
✳ U1	6	#4	1	3'-4"	13
✳ EPOXY COATED REINFORCING STEEL					121 LBS.
CLASS AA CONCRETE					2.0 CU. YDS.

BAR TYPES

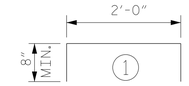

ALL BAR DIMENSIONS ARE OUT TO OUT

DETAILS OF SIDEWALK ON APPROACH SLAB

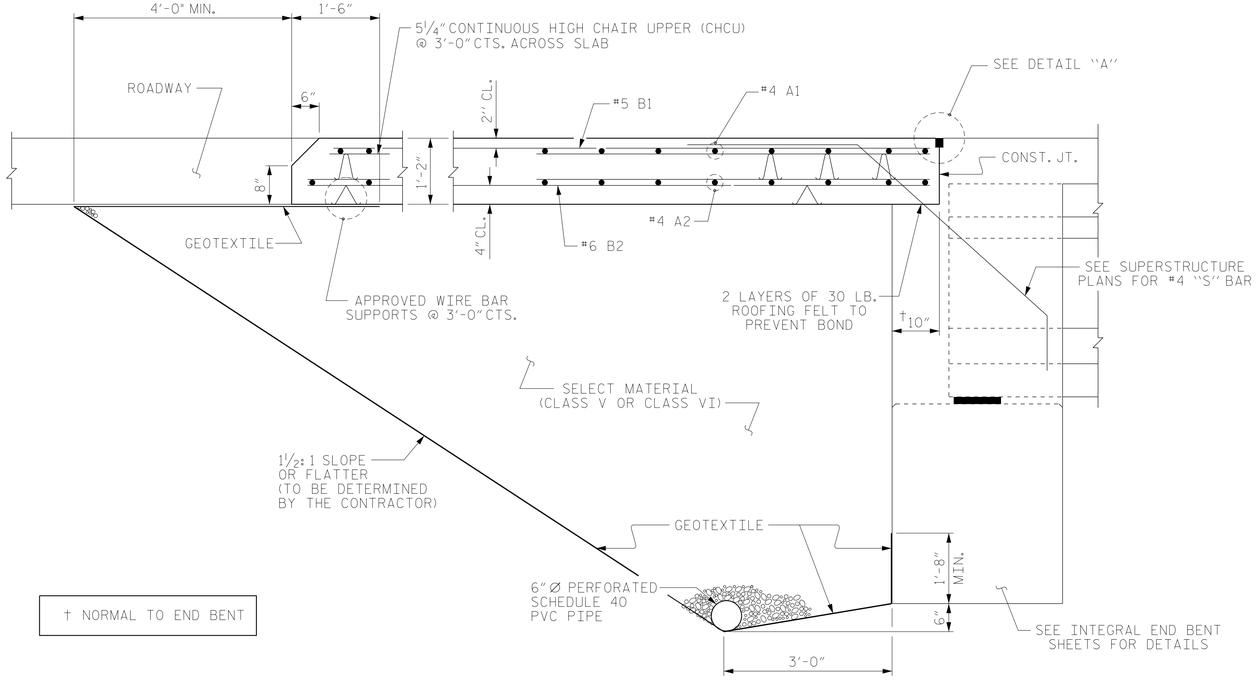

† NORMAL TO END BENT

SECTION THROUGH SLAB

(TYPE I - STANDARD APPROACH FILL)

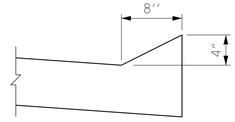

SECTION N-N

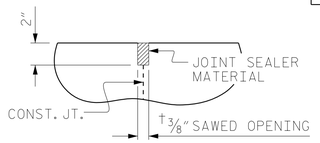

DETAIL "A"

SPLICE LENGTHS		
BAR SIZE	EPOXY COATED	UNCOATED
#4	2'-0"	1'-9"
#5	2'-6"	2'-2"
#6	3'-10"	2'-7"

PROJECT NO. B-4590

NEW HANOVER COUNTY

STATION: 18+44.50 -L-

SHEET 2 OF 3

NORTH CAROLINA PROFESSIONAL ENGINEER SEAL 18442 RICHARD LEON BOLLINGER, JR. 6/6/2021

RS&H

RS&H Architects-Engineers-Planners, Inc.
8521 Six Forks Road, Suite 400
Raleigh, NC 27615
919-926-4100 FAX 919-846-9080
www.rsandh.com
North Carolina License Nos. 50073 * F-0493 * C-28

DOCUMENT NOT CONSIDERED FINAL UNLESS ALL SIGNATURES COMPLETED

STATE OF NORTH CAROLINA
DEPARTMENT OF TRANSPORTATION
RALEIGH

BRIDGE APPROACH SLAB DETAILS

REVISIONS						SHEET NO.
NO.	BY:	DATE:	NO.	BY:	DATE:	S-41
1			3			TOTAL SHEETS
2			4			42

DRAWN BY : NSC DATE : 06/2018
CHECKED BY : PDS DATE : 07/2018
DESIGN ENGINEER OF RECORD: RLB DATE : 06/2021

6/4/2021
X:\P\1030036006 Div 3 B-4590\Design\Structures\Working DGN\Final Plans\401_081_B4590_SMU_AS_S-41_640029.dgn
CuanyN

DocuSign Envelope ID: 067A235F-0381-4EA9-9E6C-859425BCECAB

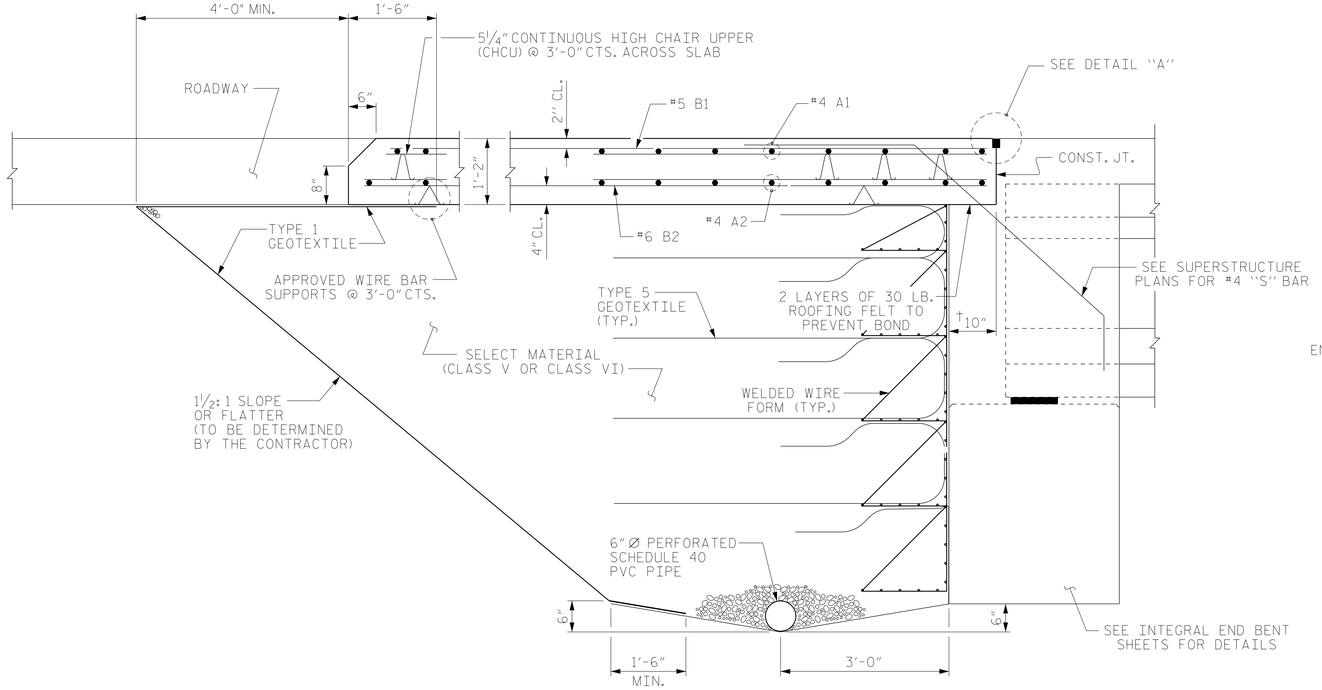

SECTION THROUGH SLAB

(TYPE A - ALTERNATE APPROACH FILL)

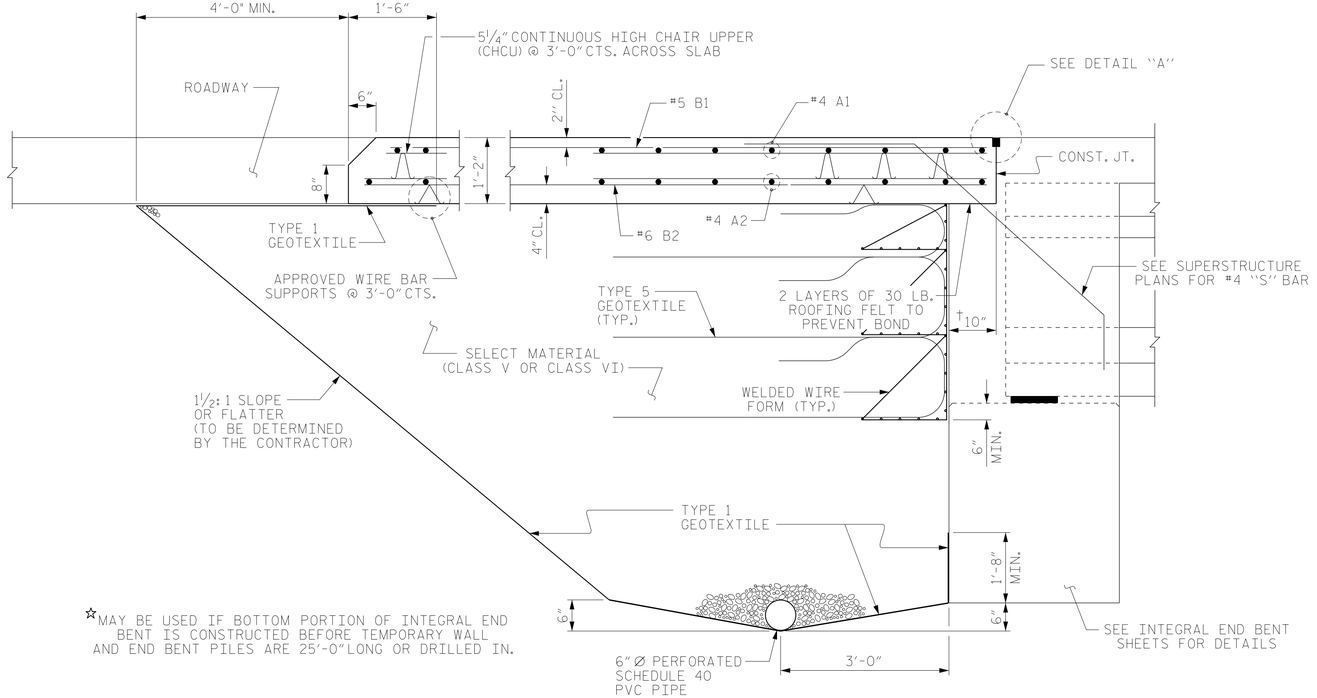

☆MAY BE USED IF BOTTOM PORTION OF INTEGRAL END BENT IS CONSTRUCTED BEFORE TEMPORARY WALL AND END BENT PILES ARE 25'-0" LONG OR DRILLED IN.

SECTION THROUGH SLAB

☆(TYPE A - ALTERNATE APPROACH FILL)

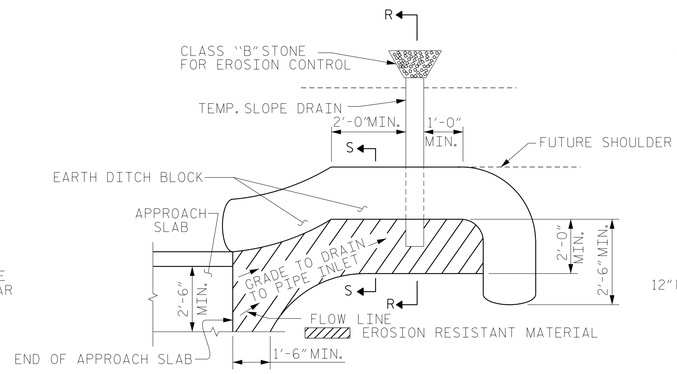

NOTE: IMMEDIATELY AFTER THE CONSTRUCTION OF THE APPROACH SLAB, THE CONTRACTOR SHALL PROVIDE TEMPORARY BERM AND SLOPE DRAIN. CONTRACTOR SHALL GRADE TO PIPE INLET AND PROVIDE EROSION RESISTANT MATERIAL AS SHOWN. THE EROSION RESISTANT MATERIAL SHALL BE EITHER 1) ASPHALT PLANT MIX, TYPE 1 OR TYPE 2, MIN. 2" DEPTH, 2) EROSION CONTROL MAT, OR 3) CONCRETE, AS DIRECTED BY THE ENGINEER. THE SLOPE DRAIN SHALL CONSIST OF A NON-PERFORATED TEMPORARY DRAINAGE PIPE, 12 INCHES IN DIAMETER.

PLAN VIEW

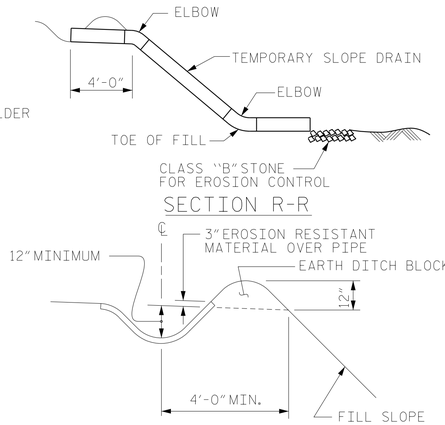

SECTION S-S

TEMPORARY BERM AND SLOPE DRAIN DETAILS

(TO BE USED WHEN SHOULDER BERM GUTTER IS REQUIRED)

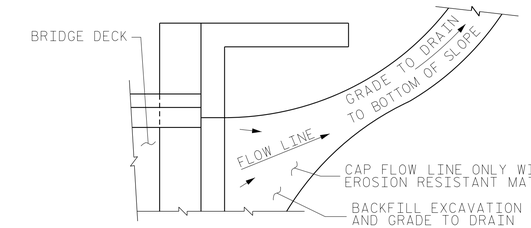

NOTE: IF THE APPROACH SLAB IS NOT CONSTRUCTED IMMEDIATELY AFTER THE BACKFILLING OF THE END BENT EXCAVATION, GRADE TO DRAIN TO THE BOTTOM OF THE SLOPE AND PROVIDE EROSION RESISTANT MATERIAL, SUCH AS FIBERGLASS ROVING OR AS DIRECTED BY THE ENGINEER TO PREVENT SOIL EROSION AND TO PROTECT THE AREA ADJACENT TO THE STRUCTURE. THE CONTRACTOR WILL BE REQUIRED TO REMOVE THESE MATERIALS PRIOR TO CONSTRUCTION OF THE APPROACH SLAB.

TEMPORARY DRAINAGE DETAIL

NOTES

APPROACH SLAB SHALL NOT BE CONSTRUCTED PRIOR TO COMPLETION OF THE BRIDGE DECK.

FOR TEMPORARY GEOTEXTILE WALL INCLUDING GEOTEXTILE, 6" Ø DRAINAGE PIPE, WELDED WIRE FORM, AND SELECT MATERIAL, SEE ROADWAY PLANS.

GEOTEXTILE (TYPE 1 OR TYPE 5) SHALL BE IN ACCORDANCE WITH THE STANDARD SPECIFICATIONS SECTION 1056.

SELECT MATERIAL BACKFILL (CLASS V OR CLASS VI) SHALL BE IN ACCORDANCE WITH STANDARD SPECIFICATIONS SECTION 1016.

SELECT MATERIAL BACKFILL IS TO BE CONTINUOUS ALONG FILL FACE OF BACKWALL FROM OUTSIDE EDGE TO OUTSIDE EDGE OF APPROACH SLAB.

FOR THE 6" Ø DRAINAGE PIPE OUTLET(S), SEE ROADWAY STANDARD DRAWINGS.

AREA BETWEEN THE WINGWALL AND APPROACH SLAB SHALL BE GRADED TO DRAIN THE WATER AWAY FROM THE FILL FACE OF THE BRIDGE AND SHALL BE PAVED. SEE ROADWAY PLANS.

THE JOINT OPENING AT THE APPROACH SLAB/DECK INTERFACE SHALL BE SAWED NO MORE THAN 12 HOURS AFTER THE APPROACH SLAB IS CAST. THE JOINT SHALL BE CLEANED OF ALL DEBRIS BEFORE THE SEALANT IS APPLIED. THE JOINT SEALER MATERIAL SHALL CONFORM TO THE REQUIREMENTS OF SECTION 1028-3 OF THE STANDARD SPECIFICATIONS.

PROJECT NO. B-4590

NEW HANOVER COUNTY

STATION: 18+44.50 -L-

SHEET 3 OF 3

ASSEMBLED BY : NSC	DATE : 06/2018		
CHECKED BY : PDS	DATE : 07/2018		
DRAWN BY : TLA 10/05	REV. 12/21/11	MAA/GM	
CHECKED BY : GM 5/06	REV. 6/13	MAA/GM	
	REV. 12/17	MAA/THC	

6/4/2021
X:\P\1030036006 Div 3 B-4590\Design\Structures\Working DGN\FinalPlans\401_083_B4590_SMU_AS_S-42_640029.dgn
CuanyN

NORTH CAROLINA PROFESSIONAL ENGINEER SEAL 18442 RICHARD LEON BOLLINGER, JR. 6/6/2021

RS&H

RS&H Architects-Engineers-Planners, Inc.
8521 Six Forks Road, Suite 400
Raleigh, NC 27615
919-926-4100 FAX 919-846-9080
www.rsandh.com
North Carolina License Nos. 50073 * F-0493 * C-28

DOCUMENT NOT CONSIDERED FINAL UNLESS ALL SIGNATURES COMPLETED

STATE OF NORTH CAROLINA
DEPARTMENT OF TRANSPORTATION
RALEIGH

STANDARD

BRIDGE APPROACH SLAB DETAILS

REVISIONS						SHEET NO.
NO.	BY:	DATE:	NO.	BY:	DATE:	S-42
1			3			TOTAL SHEETS
2			4			42

STD. NO. BAS5 (SHT 1)

DocuSign Envelope ID: 067A235F-0381-4EA9-9E6C-859425BCECAB

STANDARD NOTES

DESIGN DATA:

SPECIFICATIONS	A.A.S.H.T.O. (CURRENT)
LIVE LOAD	SEE PLANS
IMPACT ALLOWANCE	SEE A.A.S.H.T.O.
STRESS IN EXTREME FIBER OF STRUCTURAL STEEL - AASHTO M270 GRADE 36	20,000 LBS. PER SQ. IN.
- AASHTO M270 GRADE 50W	27,000 LBS. PER SQ. IN.
- AASHTO M270 GRADE 50	27,000 LBS. PER SQ. IN.
REINFORCING STEEL IN TENSION - GRADE 60	24,000 LBS. PER SQ. IN.
CONCRETE IN COMPRESSION	1,200 LBS. PER SQ. IN.
CONCRETE IN SHEAR	SEE A.A.S.H.T.O.
STRUCTURAL TIMBER - TREATED OR UNTREATED EXTREME FIBER STRESS	1,800 LBS. PER SQ. IN.
COMPRESSION PERPENDICULAR TO GRAIN OF TIMBER	375 LBS. PER SQ. IN.
EQUIVALENT FLUID PRESSURE OF EARTH	30 LBS. PER CU. FT. (MINIMUM)

MATERIAL AND WORKMANSHIP:

EXCEPT AS MAY OTHERWISE BE SPECIFIED ON PLANS OR IN THE SPECIAL PROVISIONS, ALL MATERIAL AND WORKMANSHIP SHALL BE IN ACCORDANCE WITH THE 2018 "STANDARD SPECIFICATIONS FOR ROADS AND STRUCTURES" OF THE N. C. DEPARTMENT OF TRANSPORTATION.

STEEL SHEET PILING FOR PERMANENT OR TEMPORARY APPLICATIONS SHALL BE HOT ROLLED.

CONCRETE:

UNLESS OTHERWISE REQUIRED ON PLANS, CLASS A CONCRETE SHALL BE USED FOR ALL PORTIONS OF ALL STRUCTURES WITH THE EXCEPTION THAT: CLASS AA CONCRETE SHALL BE USED IN BRIDGE SUPERSTRUCTURES, ABUTMENT BACKWALLS, AND APPROACH SLABS; AND CLASS B CONCRETE SHALL BE USED FOR SLOPE PROTECTION AND RIP RAP.

CONCRETE CHAMFERS:

UNLESS OTHERWISE NOTED ON THE PLANS, ALL EXPOSED CORNERS ON STRUCTURES SHALL BE CHAMFERED ¾" WITH THE FOLLOWING EXCEPTIONS: TOP CORNERS OF CURBS MAY BE ROUNDED TO 1½" RADIUS WHICH IS BUILT INTO CURB FORMS; CORNERS OF TRANSVERSE FLOOR EXPANSION JOINTS SHALL BE ROUNDED WITH A ¼" FINISHING TOOL UNLESS OTHERWISE REQUIRED ON PLANS; AND CORNERS OF EXPANSION JOINTS IN THE ROADWAY FACES AND TOPS OF CURBS AND SIDEWALKS SHALL BE ROUNDED TO A ¼" RADIUS WITH A FINISHING STONE OR TOOL UNLESS OTHERWISE REQUIRED ON PLANS.

DOWELS:

DOWELS WHEN INDICATED ON PLANS AS FOR CULVERT EXTENSIONS, SHALL BE EMBEDDED AT LEAST 12" INTO THE OLD CONCRETE AND GROUTED INTO PLACE WITH 1:2 CEMENT MORTAR.

ALLOWANCE FOR DEAD LOAD DEFLECTION, SETTLEMENT, ETC. IN CASTING SUPERSTRUCTURES:

BRIDGES SHALL BE BUILT ON THE GRADE OR VERTICAL CURVE SHOWN ON PLANS. SLABS, CURBS AND PARAPETS SHALL CONFORM TO THE GRADE OR CURVE.

ALL DIMENSIONS WHICH ARE GIVEN IN SECTION AND ARE AFFECTED BY DEAD LOAD DEFLECTIONS ARE DIMENSIONS AT CENTER LINE OF BEARING UNLESS OTHERWISE NOTED ON PLANS. IN SETTING FORMS FOR STEEL BEAM BRIDGES AND PRESTRESSED CONCRETE GIRDER BRIDGES, ADJUSTMENTS SHALL BE MADE DUE TO THE DEAD LOAD DEFLECTIONS FOR THE ELEVATIONS SHOWN. WHERE BLOCKS ARE SHOWN OVER BEAMS FOR BUILDING UP TO THE SLAB, THE VERTICAL DIMENSIONS OF THE BLOCKS SHALL BE ADJUSTED BETWEEN BEARINGS TO COMPENSATE FOR DEAD LOAD DEFLECTIONS, VERTICAL CURVE ORDINATE, AND ACTUAL BEAM CAMBER. WHERE BOTTOM OF SLAB IS IN LINE WITH BOTTOM OF TOP FLANGES, DEPTH OF SLAB BETWEEN BEARINGS SHALL BE ADJUSTED TO COMPENSATE FOR DEAD LOAD DEFLECTION, VERTICAL CURVE ORDINATE, AND ACTUAL BEAM CAMBER.

IN SETTING FALSEWORK AND FORMS FOR REINFORCED CONCRETE SPANS, AN ALLOWANCE SHALL BE MADE FOR DEAD LOAD DEFLECTIONS, SETTLEMENT OF FALSEWORK, AND PERMANENT CAMBER WHICH SHALL BE PROVIDED FOR IN ADDITION TO THE ELEVATIONS SHOWN. AFTER REMOVAL OF THE FALSEWORK, THE FINISHED STRUCTURES SHALL CONFORM TO THE PROFILE AND ELEVATIONS SHOWN ON THE PLANS AND CONSTRUCTION ELEVATIONS FURNISHED BY THE ENGINEER.

DETAILED DRAWINGS FOR FALSEWORK OR FORMS FOR BRIDGE SUPERSTRUCTURE AND ANY STRUCTURE OR PARTS OF A STRUCTURE AS NOTED ON THE PLANS SHALL BE SUBMITTED TO THE ENGINEER FOR APPROVAL BEFORE CONSTRUCTION OF THE FALSEWORK OR FORMS IS STARTED.

REINFORCING STEEL:

ALL REINFORCING STEEL SHALL BE DEFORMED. DIMENSIONS RELATIVE TO PLACEMENT OF REINFORCING ARE TO CENTERS OF BARS UNLESS OTHERWISE INDICATED IN THE PLANS. DIMENSIONS ON BAR DETAILS ARE TO CENTERS OF BARS OR ARE OUT TO OUT AS INDICATED ON PLANS.

WIRE BAR SUPPORTS SHALL BE PROVIDED FOR REINFORCING STEEL WHERE INDICATED ON THE PLANS. WHEN BAR SUPPORT PIECES ARE PLACED IN CONTINUOUS LINES, THEY SHALL BE SO PLACED THAT THE ENDS OF THE SUPPORTING WIRES SHALL BE LAPPED TO LOCK LEGS ON ADJOINING PIECES.

STRUCTURAL STEEL:

AT THE CONTRACTOR'S OPTION, HE MAY SUBSTITUTE ⅞" Ø SHEAR STUDS FOR THE ¾" Ø STUDS SPECIFIED ON THE PLANS. THIS SUBSTITUTION SHALL BE MADE AT THE RATE OF 3 - ⅞" Ø STUDS FOR 4 - ¾" Ø STUDS, AND STUD SPACING CHANGES SHALL BE MADE AS NECESSARY TO PROVIDE THE SAME EQUIVALENT NUMBER OF ⅞" Ø STUDS ALONG THE BEAM AS SHOWN FOR ¾" Ø STUDS BASED ON THE RATIO OF 3 - ⅞" Ø STUDS FOR 4 - ¾" Ø STUDS. STUDS OF THE LENGTH SPECIFIED ON THE PLANS MUST BE PROVIDED. THE MAXIMUM SPACING SHALL BE 2'-0".

EXCEPT AT THE INTERIOR SUPPORTS OF CONTINUOUS BEAMS WHERE THE COVER PLATE IS IN CONTACT WITH BEARING PLATE, THE CONTRACTOR MAY, AT HIS OPTION, SUBSTITUTE FOR THE COVER PLATES DESIGNATED ON THE PLANS COVER PLATES OF THE EQUIVALENT AREA PROVIDED THESE PLATES ARE AT LEAST 5/16" IN THICKNESS AND DO NOT EXCEED A WIDTH EQUAL TO THE FLANGE WIDTH LESS 2" OR A THICKNESS EQUAL TO 2 TIMES THE FLANGE THICKNESS. THE SIZE OF FILLET WELDS SHALL CONFORM TO THE REQUIREMENTS OF THE CURRENT ANSI/AASHTO/AWS "BRIDGE WELDING CODE". ELECTROSLAG WELDING WILL NOT BE PERMITTED.

WITH THE SOLE EXCEPTION OF EDGES AT SURFACES WHICH BEAR ON OTHER SURFACES, ALL SHARP EDGES AND ENDS OF SHAPES AND PLATES SHALL BE SLIGHTLY ROUNDED BY SUITABLE MEANS TO A RADIUS OF APPROXIMATELY 1/16 INCH OR EQUIVALENT FLAT SURFACE AT A SUITABLE ANGLE PRIOR TO PAINTING, GALVANIZING, OR METALLIZING.

HANDRAILS AND POSTS:

METAL STANDARDS AND FACES OF THE CONCRETE END POSTS FOR THE METAL RAIL SHALL BE SET NORMAL TO THE GRADE OF THE CURB, UNLESS OTHERWISE SHOWN ON PLANS. THE METAL RAIL AND TOPS OF CONCRETE POSTS USED WITH THE ALUMINUM RAIL SHALL BE BUILT PARALLEL TO THE GRADE OF THE CURB.

METAL HANDRAILS SHALL BE IN ACCORDANCE WITH THE PLANS. RAILS SHALL BE AS MANUFACTURED FOR BRIDGE RAILING. CASTINGS SHALL BE OF A UNIFORM APPEARANCE. FINS AND OTHER DEFORMATIONS RESULTING FROM CASTING OR OTHERWISE SHALL BE REMOVED IN A MANNER SO THAT A UNIFORM COLORING OF THE COMPLETED CASTING SHALL BE OBTAINED. CASTINGS WITH DISCOLORATIONS OR OF NON-UNIFORM COLORING WILL NOT BE ACCEPTED. CERTIFIED MILL REPORTS ARE REQUIRED FOR METAL RAILS AND POSTS.

SPECIAL NOTES:

GENERALLY, IN CASE OF DISCREPANCY, THIS STANDARD SHEET OF NOTES SHALL GOVERN OVER THE SPECIFICATIONS, BUT THE REMAINDER OF THE PLANS SHALL GOVERN OVER NOTES HEREON, AND SPECIAL PROVISIONS SHALL GOVERN OVER ALL. SEE SPECIFICATIONS ARTICLE 105-4.

ENGLISH

JANUARY, 1990

STD. NO. SN

REV. 6-16-95 EEM (/) RGW REV. 5-7-03 RWW (/) JTE REV. 10-1-11 MAA (/) GM
REV. 8-16-99 RWW (/) LES REV. 5-1-06 TLA (/) GM REV. 12-17 MAA (/) THC

6/4/2021
X:\PV\1030036006 Div 3 B-4590\Design\Structures\Working DGN\FinalPlans\401_085_B4590_SMU_SN_S-43_640029.dgn
CuanyN