DocuSign Envelope ID: D927C0C2-BBB0-4C2D-BD36-06E373FD7F57

09/08/99

TIP PROJECT: BP3.R002

CONTRACT: DC00401

See Sheet 1A For Index of Sheets
See Sheet 1B for Symbology Sheet

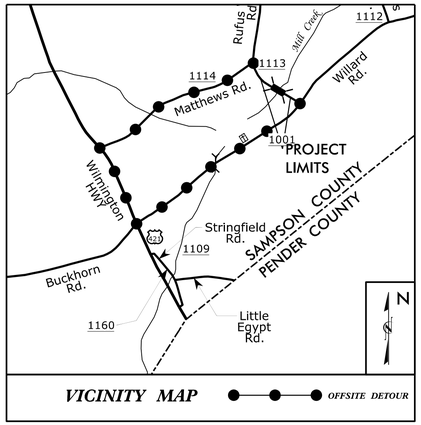

VICINITY MAP ●——●——● OFFSITE DETOUR

100% SUBMITTAL

STATE OF NORTH CAROLINA
DIVISION OF HIGHWAYS

SAMPSON COUNTY

LOCATION: REPLACE BRIDGE NO. 297 OVER MILL CREEK ON SR 1113 (RUFUS WELLS ROAD)

TYPE OF WORK: GRADING, DRAINAGE, PAVING AND STRUCTURE

STATE	STATE PROJECT REFERENCE NO.	SHEET NO.	TOTAL SHEETS
N.C.	BP3.R002	1	

STATE PROJ. NO.	F.A. PROJ. NO.	DESCRIPTION
BP3.R002.1		PE
BP3.R002.2		ROW/UTIL
BP3.R002.3		CONSTRUCTION

NAD 83/NA 2011

4

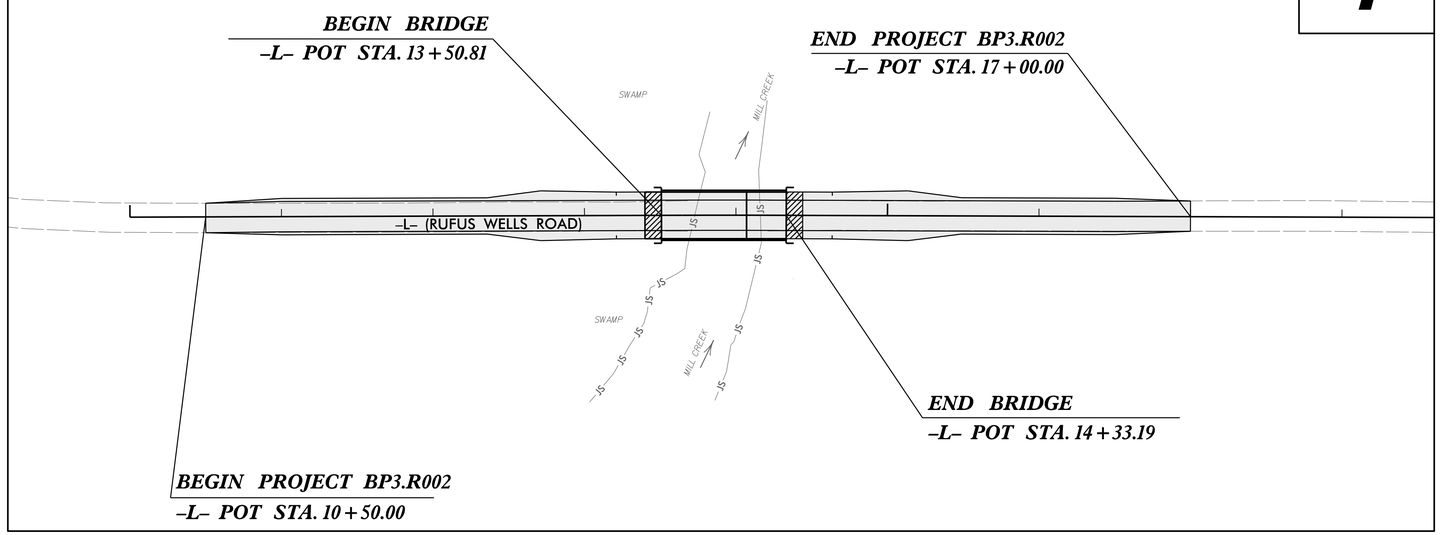

DOCUMENT NOT CONSIDERED FINAL UNLESS ALL SIGNATURES COMPLETED

GRAPHIC SCALES

50 25 0 50 100
PLANS

50 25 0 50 100
PROFILE (HORIZONTAL)

10 5 0 10 20
PROFILE (VERTICAL)

DESIGN DATA

ADT 2022 = 470
ADT 2042 = 780
K = 10 %
D = 60 %
T = 6 % *
V = 60 MPH
* TTST = 2% DUAL 4%
FUNC CLASS = LOCAL
SUB-REGIONAL TIER

PROJECT LENGTH

LENGTH OF ROADWAY PROJECT BP3.R002	=	0.107 MILES
LENGTH OF STRUCTURE PROJECT BP3.R002	=	0.016 MILES
TOTAL LENGTH OF PROJECT BP3.R002	=	0.123 MILES

PREPARED IN THE OFFICE OF:
HNTB
HNTB NORTH CAROLINA, P.C.
343 E. Six Forks Road, Suite 200
Raleigh, North Carolina 27609
NC License No: C-1554
FOR NCDOT DIVISION 3

2018 STANDARD SPECIFICATIONS

RIGHT OF WAY DATE:
JANUARY 26, 2022

LETTING DATE:
JULY 07, 2022

BRIAN P. BLACKWELL, PE
PROJECT ENGINEER

ANDREW McOMBER, EI
PROJECT DESIGN ENGINEER

DEREK PIELECH, PE
NCDOT CONTACT

HYDRAULICS ENGINEER

NORTH CAROLINA PROFESSIONAL SEAL 40801 ENGINEER BRIAN P. BLACKWELL

DocuSigned by: Paul Cameron
E9B339BC9C244C...
SIGNATURE: P.E. 5/17/2022

ROADWAY DESIGN ENGINEER

NORTH CAROLINA PROFESSIONAL SEAL 043122 ENGINEER BRIAN P. BLACKWELL

DocuSigned by: Brian Blackwell
CC4D739E1E6D4B7...
SIGNATURE: P.E. 5/17/2022

STATE OF NORTH CAROLINA DEPARTMENT OF TRANSPORTATION

17-MAY-2022 14:52
\Roadway\Proj\BP3R002_RDY_TSH.dgn
HNTB

DocuSign Envelope ID: D927C0C2-BBB0-4C2D-BD36-06E373FD7F57

8/17/99

PROJECT REFERENCE NO.	SHEET NO.
BP3.R002	1A

ROADWAY DESIGN ENGINEER

NORTH CAROLINA PROFESSIONAL SEAL 043122 ENGINEER

5/17/2022

DOCUMENT NOT CONSIDERED FINAL UNLESS ALL SIGNATURES COMPLETED

INDEX OF SHEETS

SHEET NUMBER	SHEET
1	TITLE SHEET
1A	INDEX OF SHEETS, GENERAL NOTES & LIST OF STANDARDS
1B	SYMBOLOGY SHEET
2A–1	TYPICAL SECTION SHEET
2C–1 THRU 2C–3	SPECIAL DETAIL SHEETS
2G–1	ROCK EMBANKMENT DETAIL
3B–1	ROADWAY SUMMARY SHEETS (EARTHWORK, SBG, GUARDRAIL, PIPES)
3G–1	GEOTECHNICAL SUMMARIES
4	PLAN & PROFILE SHEET
RW01 THRU RW04	SURVEY CONTROL & RW SHEETS
TMP–1 THRU TMP–2	TRAFFIC CONTROL PLANS
EC–1 THRU EC–4	EROSION CONTROL PLANS
U0–1 THRU UO–2	UTILITIES BY OTHERS PLANS
X–0	CROSS SECTION SUMMARY
X–1 THRU X–4	CROSS SECTION SHEETS
S–1 THRU S–19	STRUCTURE PLANS

GENERAL NOTES: 2018 SPECIFICATIONS

EFFECTIVE: 01–16–2018
REVISED:

GRADE LINE:
GRADING AND SURFACING:

THE GRADE LINES SHOWN DENOTE THE FINISHED ELEVATION OF THE PROPOSED SURFACING AT GRADE POINTS SHOWN ON THE TYPICAL SECTIONS. GRADE LINES MAY BE ADJUSTED AT THEIR BEGINNING AND ENDING AND AT STRUCTURES AS DIRECTED BY THE ENGINEER IN ORDER TO SECURE A PROPER TIE–IN.

CLEARING:

CLEARING ON THIS PROJECT SHALL BE PERFORMED TO THE LIMITS ESTABLISHED BY MODIFIED METHOD III.

SUPERELEVATION:

ALL CURVES ON THIS PROJECT SHALL BE SUPERELEVATED IN ACCORDANCE WITH STD. NO. 225.04 USING THE RATE OF SUPERELEVATION AND RUNOFF SHOWN ON THE PLANS. SUPERELEVATION IS TO BE REVOLVED ABOUT THE GRADE POINTS SHOWN ON THE TYPICAL SECTIONS.

SHOULDER CONSTRUCTION:

ASPHALT, EARTH, AND CONCRETE SHOULDER CONSTRUCTION ON THE HIGH SIDE OF SUPERELEVATED CURVES SHALL BE IN ACCORDANCE WITH STD. NO. 560.01

SUBSURFACE DRAINS:

SUBSURFACE DRAINS SHALL BE CONSTRUCTED IN ACCORDANCE WITH STD. NO. 815.02 AT LOCATIONS DIRECTED BY THE ENGINEER.

GUARDRAIL:

THE GUARDRAIL LOCATIONS SHOWN ON THE PLANS MAY BE ADJUSTED DURING CONSTRUCTION AS DIRECTED BY THE ENGINEER. THE CONTRACTOR SHOULD CONSULT WITH THE ENGINEER PRIOR TO ORDERING GUARDRAIL MATERIAL.

END BENTS:

THE ENGINEER SHALL CHECK THE STRUCTURE END BENT PLANS, DETAILS, AND CROSS–SECTION PRIOR TO SETTING OF THE SLOPE STAKES FOR THE EMBANKMENT OR EXCAVATION APPROACHING A BRIDGE.

UTILITIES:

UTILITY OWNERS ON THIS PROJECT ARE

POWER – FOUR COUNTY EMC

COMMUNICATIONS – STAR TELEPHONE

ANY RELOCATION OF EXISTING UTILITIES WILL BE ACCOMPLISHED BY OTHERS.

RIGHT–OF–WAY MARKERS:

ALL RIGHT–OF–WAY MARKERS ON THIS PROJECT SHALL BE PLACED BY OTHERS.

EFF. 01–16–2018
REV.

2018 ROADWAY ENGLISH STANDARD DRAWINGS

THE FOLLOWING ROADWAY STANDARDS AS APPEAR IN "ROADWAY STANDARD DRAWINGS" HIGHWAY DESIGN BRANCH – N. C. DEPARTMENT OF TRANSPORTATION – RALEIGH, N. C., DATED JANUARY, 2018 ARE APPLICABLE TO THIS PROJECT AND BY REFERENCE HEREBY ARE CONSIDERED A PART OF THESE PLANS:

STD.NO.	TITLE
DIVISION 2 – EARTHWORK	
200.03	METHOD OF CLEARING – MODIFIED METHOD III (SPECIAL DETAIL)
225.02	GUIDE FOR GRADING SUBGRADE – SECONDARY AND LOCAL
225.04	METHOD OF OBTAINING SUPERELEVATION – TWO LANE PAVEMENT
275.01	ROCK PLATING (USE SPECIAL DETAIL)
DIVISION 3 – PIPE CULVERTS	
300.01	METHOD OF PIPE INSTALLATION
DIVISION 4 – MAJOR STRUCTURES	
422.02	BRIDGE APPROACH FILLS – TYPE II MODIFIED APPROACH FILL (SPECIAL DETAIL – SEE STRUCTURE PLANS SHEET 19)
DIVISION 5 – SUBGRADE, BASES AND SHOULDERS	
560.01	METHOD OF SHOULDER CONSTRUCTION – HIGH SIDE OF SUPERELEVATED CURVE – METHOD I
DIVISION 8 – INCIDENTALS	
815.02	SUBSURFACE DRAIN
840.00	CONCRETE BASE PAD FOR DRAINAGE STRUCTURES
840.29	FRAMES AND NARROW SLOT FLAT GRATES
840.35	TRAFFIC BEARING GRATED DROP INLET – FOR CAST IRON DOUBLE FRAME AND GRATES
840.66	DRAINAGE STRUCTURE STEPS
846.01	CONCRETE CURB, GUTTER AND CURB & GUTTER
846.04	DROP INLET INSTALLATION IN SHOULDER BERM GUTTER
862.01	GUARDRAIL PLACEMENT
862.02	GUARDRAIL INSTALLATION (SPECIAL DETAIL FOR SHEET 6 OF 8)
862.03	STRUCTURE ANCHOR UNITS (SPECIAL DETAIL FOR TYPE III ANCHOR UNITS 1 OF 7 AND 2 OF 7)
876.02	GUIDE FOR RIP RAP AT PIPE OUTLETS

03-MAY-2022 10:42
R:\Roadway\Proj\BP3R002_RDY_GEN.dgn
INITB

9/10/2021

PROJECT REFERENCE NO.	SHEET NO.
BP3.R002	1B

STATE OF NORTH CAROLINA, DIVISION OF HIGHWAYS

CONVENTIONAL PLAN SHEET SYMBOLS

Note: Not to Scale

BOUNDARIES AND PROPERTY:

- State Line
- County Line
- Township Line
- City Line
- Reservation Line
- Property Line
- Existing Iron Pin (EIP) — EIP
- Computed Property Corner
- Existing Concrete Monument (ECM) — ECM
- Parcel/Sequence Number — 123
- Existing Fence Line
- Proposed Woven Wire Fence
- Proposed Chain Link Fence
- Proposed Barbed Wire Fence
- Existing Wetland Boundary — WLB
- Proposed Wetland Boundary — WLB
- Existing Endangered Animal Boundary — EAB
- Existing Endangered Plant Boundary — EPB
- Existing Historic Property Boundary — HPB
- Known Contamination Area: Soil
- Potential Contamination Area: Soil
- Known Contamination Area: Water
- Potential Contamination Area: Water
- Contaminated Site: Known or Potential

BUILDINGS AND OTHER CULTURE:

- Gas Pump Vent or U/G Tank Cap
- Sign — S
- Well — W
- Small Mine
- Foundation
- Area Outline
- Cemetery
- Building
- School
- Church
- Dam

HYDROLOGY:

- Stream or Body of Water
- Hydro, Pool or Reservoir
- Jurisdictional Stream — JS
- Buffer Zone 1 — BZ 1
- Buffer Zone 2 — BZ 2
- Flow Arrow
- Disappearing Stream
- Spring
- Wetland
- Proposed Lateral, Tail, Head Ditch — FLOW
- False Sump

RAILROADS:

- Standard Gauge — CSX TRANSPORTATION
- RR Signal Milepost — MILEPOST 35
- Switch — SWITCH
- RR Abandoned
- RR Dismantled

RIGHT OF WAY & PROJECT CONTROL:

- Primary Horiz Control Point
- Primary Horiz and Vert Control Point
- Secondary Horiz and Vert Control Point
- Vertical Benchmark
- Existing Right of Way Monument
- Proposed Right of Way Monument (Rebar and Cap)
- Proposed Right of Way Monument (Concrete)
- Existing Permanent Easement Monument
- Proposed Permanent Easement Monument (Rebar and Cap)
- Existing C/A Monument
- Proposed C/A Monument (Rebar and Cap)
- Proposed C/A Monument (Concrete)
- Existing Right of Way Line
- Proposed Right of Way Line — RW
- Existing Control of Access Line — CA
- Proposed Control of Access Line — CA
- Proposed ROW and CA Line — RW CA
- Existing Easement Line — E
- Proposed Temporary Construction Easement — E
- Proposed Temporary Drainage Easement — TDE
- Proposed Permanent Drainage Easement — PDE
- Proposed Permanent Drainage/Utility Easement — DUE
- Proposed Permanent Utility Easement — PUE
- Proposed Temporary Utility Easement — TUE
- Proposed Aerial Utility Easement — AUE

ROADS AND RELATED FEATURES:

- Existing Edge of Pavement
- Existing Curb
- Proposed Slope Stakes Cut — C
- Proposed Slope Stakes Fill — F
- Proposed Curb Ramp — CR
- Existing Metal Guardrail
- Proposed Guardrail
- Existing Cable Guiderail
- Proposed Cable Guiderail
- Equality Symbol
- Pavement Removal

VEGETATION:

- Single Tree
- Single Shrub
- Hedge
- Woods Line
- Orchard
- Vineyard — Vlneyard

EXISTING STRUCTURES:

MAJOR:

- Bridge, Tunnel or Box Culvert — CONC
- Bridge Wing Wall, Head Wall and End Wall — CONC WW

MINOR:

- Head and End Wall — CONC HW
- Pipe Culvert
- Footbridge
- Drainage Box: Catch Basin, DI or JB — CB
- Paved Ditch Gutter
- Storm Sewer Manhole — S
- Storm Sewer — S

UTILITIES:

** SUE – Subsurface Utility Engineering*
LOS – Level of Service – A,B,C or D (Accuracy)

POWER:

- Existing Power Pole
- Proposed Power Pole
- Existing Joint Use Pole
- Proposed Joint Use Pole
- Power Manhole — P
- Power Line Tower
- Power Transformer
- U/G Power Cable Hand Hole — HH
- H-Frame Pole
- U/G Power Line Test Hole (SUE – LOS A)*
- U/G Power Line (SUE – LOS B)* — P
- U/G Power Line (SUE – LOS C)* — P
- U/G Power Line (SUE – LOS D)* — P

TELEPHONE:

- Existing Telephone Pole
- Proposed Telephone Pole
- Telephone Manhole — T
- Telephone Pedestal — T
- Telephone Cell Tower
- U/G Telephone Cable Hand Hole — HH
- U/G Telephone Test Hole (SUE – LOS A)*
- U/G Telephone Cable (SUE – LOS B)* — T
- U/G Telephone Cable (SUE – LOS C)* — T
- U/G Telephone Cable (SUE – LOS D)* — T
- U/G Telephone Conduit (SUE – LOS B)* — TC
- U/G Telephone Conduit (SUE – LOS C)* — TC
- U/G Telephone Conduit (SUE – LOS D)* — TC
- U/G Fiber Optics Cable (SUE – LOS B)* — T FO
- U/G Fiber Optics Cable (SUE – LOS C)* — T FO
- U/G Fiber Optics Cable (SUE – LOS D)* — T FO

WATER:

- Water Manhole — W
- Water Meter
- Water Valve
- Water Hydrant
- U/G Water Line Test Hole (SUE – LOS A)*
- U/G Water Line (SUE – LOS B)* — W
- U/G Water Line (SUE – LOS C)* — W
- U/G Water Line (SUE – LOS D)* — W
- Above Ground Water Line — A/G Water

TV:

- TV Pedestal — C
- TV Tower
- U/G TV Cable Hand Hole — HH
- U/G TV Test Hole (SUE – LOS A)*
- U/G TV Cable (SUE – LOS B)* — TV
- U/G TV Cable (SUE – LOS C)* — TV
- U/G TV Cable (SUE – LOS D)* — TV
- U/G Fiber Optic Cable (SUE – LOS B)* — TV FO
- U/G Fiber Optic Cable (SUE – LOS C)* — TV FO
- U/G Fiber Optic Cable (SUE – LOS D)* — TV FO

GAS:

- Gas Valve
- Gas Meter
- U/G Gas Line Test Hole (SUE – LOS A)*
- U/G Gas Line (SUE – LOS B)* — G
- U/G Gas Line (SUE – LOS C)* — G
- U/G Gas Line (SUE – LOS D)* — G
- Above Ground Gas Line — A/G Gas

SANITARY SEWER:

- Sanitary Sewer Manhole
- Sanitary Sewer Cleanout
- U/G Sanitary Sewer Line — SS
- Above Ground Sanitary Sewer — A/G Sanitary Sewer
- SS Force Main Line Test Hole (SUE – LOS A)*
- SS Force Main Line (SUE – LOS B)* — FSS
- SS Force Main Line (SUE – LOS C)* — FSS
- SS Force Main Line (SUE – LOS D)* — FSS

MISCELLANEOUS:

- Utility Pole
- Utility Pole with Base
- Utility Located Object
- Utility Traffic Signal Box — S
- Utility Unknown U/G Line (SUE – LOS B)* — 2UTL
- U/G Tank; Water, Gas, Oil
- Underground Storage Tank, Approx. Loc. — UST
- A/G Tank; Water, Gas, Oil
- Geoenvironmental Boring
- Abandoned According to Utility Records — AATUR
- End of Information — E.O.I.

DocuSign Envelope ID: D927C0C2-BBB0-4C2D-BD36-06E373FD7F57

6/2/99

PAVEMENT SCHEDULE

C1	PROP. APPROX. 1.5″ ASPHALT CONCRETE SURFACE COURSE TYPE S9.5B AT AN AVERAGE RATE OF 165 LBS. PER SQ. YD.
C2	PROP. APPROX. 3″ ASPHALT CONCRETE SURFACE COURSE, TYPE S9.5B, AT AN AVERAGE RATE OF 165 LBS. PER SQ. YD. PLACED IN TWO LAYERS.
C3	PROP. VAR. DEPTH ASPHALT CONCRETE SURFACE COURSE, TYPE S9.5B, AT AN AVERAGE RATE OF 110 LBS. PER SQ. YD. PER 1″ DEPTH, TO BE PLACED IN LAYERS NOT LESS THAN 1″ IN DEPTH OR GREATER THAN 1½″ IN DEPTH.
E1	PROP. APPROX. 5″ ASPHALT CONCRETE BASE COURSE, TYPE B25.0C, AT AN AVERAGE RATE OF 570 LBS. PER SQ. YD.
E2	PROP. APPROX. 6″ ASPHALT CONCRETE BASE COURSE, TYPE B25.0C, AT AN AVERAGE RATE OF 342 LBS. PER SQ. YD. PLACED IN TWO LAYERS
E3	PROP. VAR. DEPTH ASPHALT CONCRETE BASE COURSE, TYPE B25.0C, AT AN AVERAGE RATE OF 114 LBS. PER SQ. YD. PER 1″ DEPTH. TO BE PLACED IN LAYERS NOT LESS THAN 3″ IN DEPTH OR GREATER THAN 5½″ IN DEPTH.
R1	SHOULDER BERM GUTTER
T	EARTH MATERIAL
U	EXISTING PAVEMENT
V	INCIDENTAL MILLING
W	VARIABLE DEPTH ASPHALT PAVEMENT (SEE STANDARD WEDGING DETAIL NO.1, THIS SHEET)

ALL PAVEMENT EDGE SLOPES ARE 1:1 UNLESS SHOWN OTHERWISE

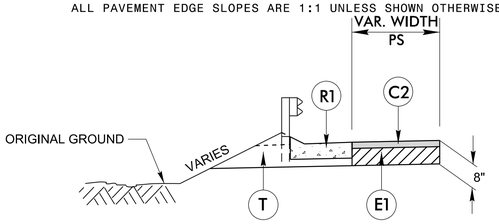

DETAIL A

SHOULDER BERM GUTTER LOCATIONS
-L- STA 13+21.08 TO STA 13+39.94 LT/RT
-L- STA 14+44.06 TO STA 14+63.52 LT/RT

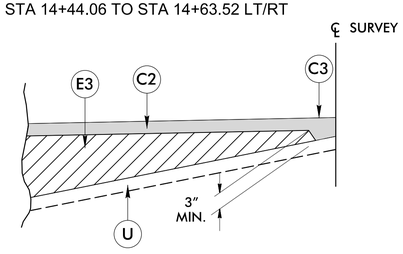

DETAIL SHOWING METHOD OF WEDGING

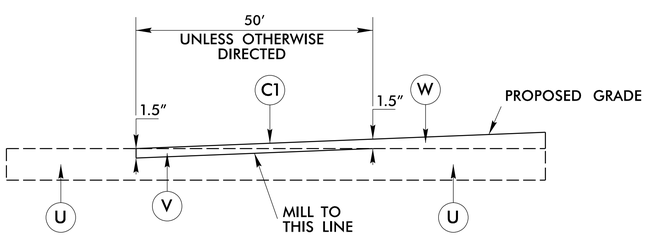

DETAIL FOR INCIDENTAL MILLING

HNTB
HNTB NORTH CAROLINA, P.C.
343 E. Six Forks Road, Suite 200
Raleigh, North Carolina 27609
NC License No: C-1554

PROJECT REFERENCE NO.	SHEET NO.
BP3.R002	2A–1

ROADWAY DESIGN ENGINEER

NORTH CAROLINA PROFESSIONAL SEAL 043122 ENGINEER
5/17/2022

DOCUMENT NOT CONSIDERED FINAL UNLESS ALL SIGNATURES COMPLETED

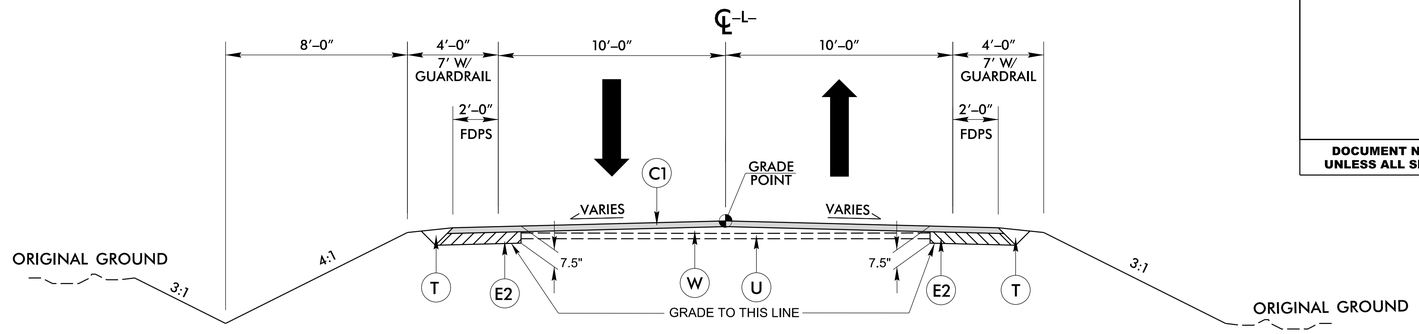

TYPICAL SECTION NO. 1

–L– SR 1113 (RUFUS WELLS RD)

USE TYPICAL SECTION NO. 1 FROM:
-L- STA 10+50.00 TO STA 11+00.00

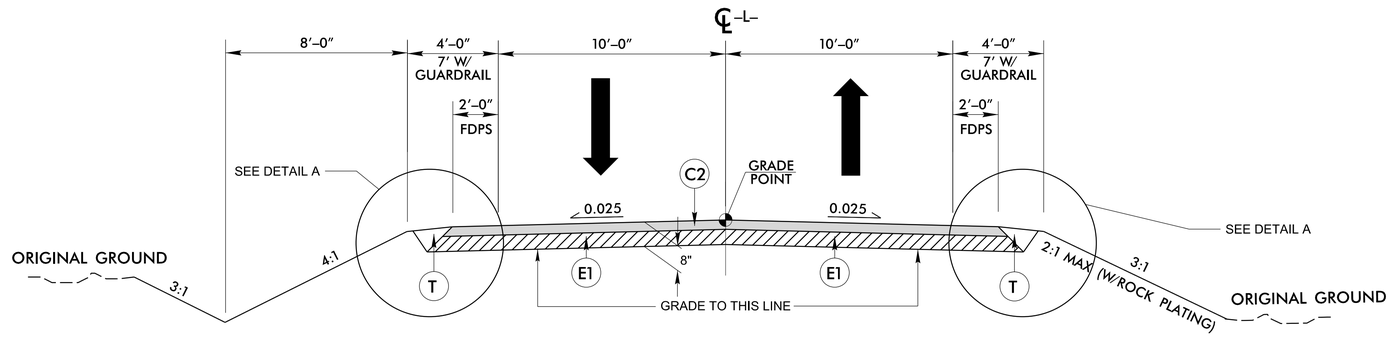

TYPICAL SECTION NO. 2

–L– SR 1113 (RUFUS WELLS RD)

USE TYPICAL SECTION NO. 2 FROM:
-L- STA 11+00.00 TO STA 13+50.81 (BRIDGE)
-L- STA 14+33.19 (BRIDGE) TO STA 17+00.00

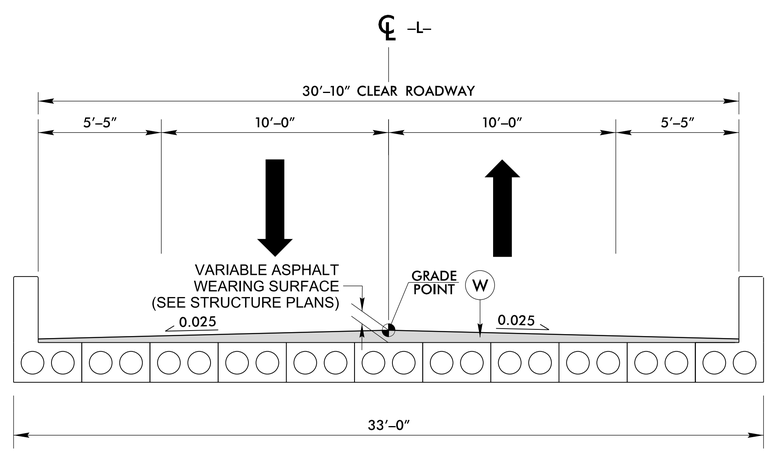

TYPICAL SECTION NO. 3

–L– SR 1113 (RUFUS WELLS RD)
CORED SLAB BRIDGE OVERLAY

USE TYPICAL SECTION NO. 3 FROM:
-L- STA 13+50.81 TO STA 14+33.19

NOTES:
GUARDRAIL TO BE PLACED AT MINIMUM 4' FROM EDGE OF TRAVEL.

17-MAY-2022 15:20
INTR
\Projects\BP3R002_RDY_TYP.dgn

DocuSign Envelope ID: DEFB30BC-314B-451F-9CEE-4F183FA0E8E0

5/14/99

PROJECT REFERENCE NO.	SHEET NO.
BP3.R002	2C-1

STATE OF
NORTH CAROLINA
DEPT. OF TRANSPORTATION
DIVISION OF HIGHWAYS
RALEIGH, N.C.

ENGLISH DETAIL DRAWING FOR
METHOD OF CLEARING
MODIFIED METHOD - III

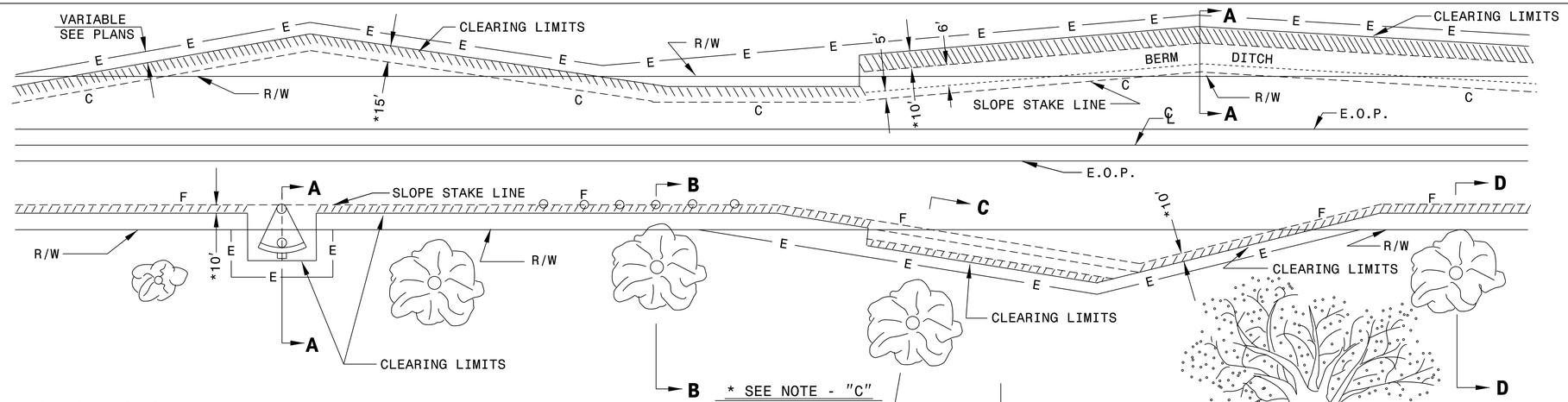

GENERAL NOTES:

1. REMOVE TREES OUTSIDE THE CLEARING LIMIT WHEN, IN THE OPINION OF THE ENGINEER, THE UTILITY OF A TREE WILL BE DESTROYED BY THE CONSTRUCTION OR THE CLEARING OPERATION.
2. CLEAR IN ACCORDANCE WITH THIS STANDARD EXCEPT WHERE ADDITIONAL CLEARING IS REQUIRED FOR SAFETY AS SHOWN ON THE PLANS.

METHOD III CLEARING LIMITS

(A) CUTS -- CLEAR TO CONSTRUCTION LIMITS.
(B) FILLS - CLEAR TO 5'/10' * BEYOND CONSTRUCTION LIMITS, UNLESS SPECIFIED OTHERWISE BY WETLAND PERMIT.
(C) CUTS AND FILLS - WHEN THE CLEARING LIMITS (A AND B) EXCEED THE PROPOSED R/W OR PROPOSED CONSTRUCTION EASEMENTS, THEN CLEAR ONLY TO THE R/W OR CONSTRUCTION EASEMENT WHICHEVER IS GREATER.

* FOR FILL HEIGHTS LESS THAN 10' CLEAR TO 5' BEYOND CONSTRUCTION LIMITS.
* FOR FILL HEIGHTS 10' OR GREATER CLEAR TO 10' BEYOND CONSTRUCTION LIMITS.
** PLACE SILT FENCE AT 5' BEYOND TOE OF SLOPE IN FILL SECTIONS WITH LESS THAN 10'. PLACE SILT FENCE AT 10' BEYOND TOE OF SLOPE IN FILL SECTIONS WITH 10' OR GREATER.

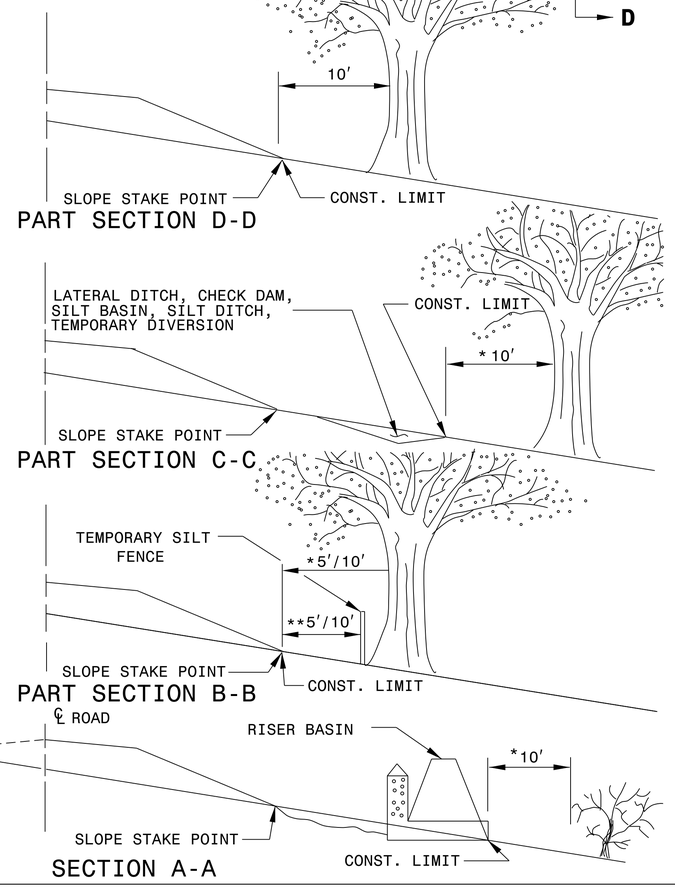

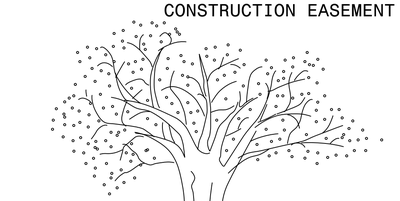

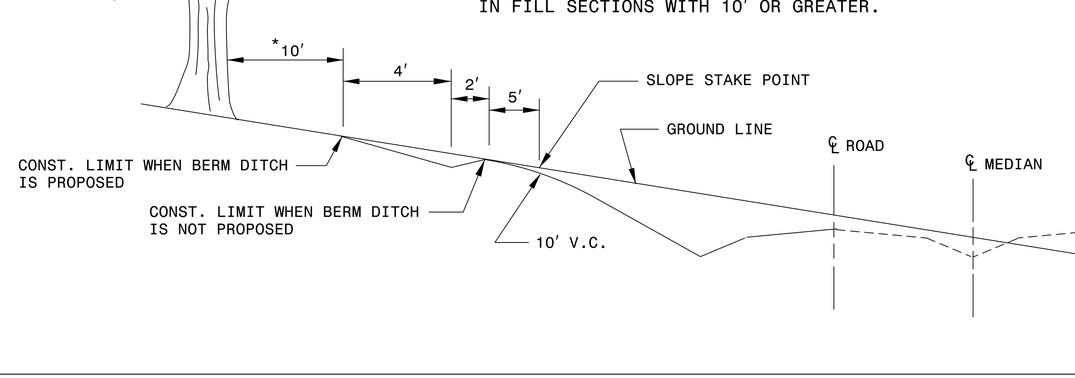

SHEET 1 OF 1
200D03

STATE OF
NORTH CAROLINA
DEPT. OF TRANSPORTATION
DIVISION OF HIGHWAYS
RALEIGH, N.C.

ENGLISH DETAIL DRAWING FOR
METHOD OF CLEARING
MODIFIED METHOD - III

SHEET 1 OF 1
200D03

NORTH CAROLINA PROFESSIONAL SEAL 022071 ENGINEER
F81B6D3D4A4A4B...
5/18/2022

DOCUMENT NOT CONSIDERED FINAL UNLESS ALL SIGNATURES COMPLETED

CONTRACT STANDARDS AND DEVELOPMENT UNIT
Office 919-707-6950 FAX 919-250-4119

SEE TITLE BLOCK

ORIGINAL BY:	T.S.S.	DATE:	FEB.2000
MODIFIED BY:	K.A.K.	DATE:	AUG.2016
CHECKED BY:		DATE:	
FILE SPEC.:	kkempf/english/0200d301.dgn		

05-DEC-2017 (0:3)
S:\Contracts\Special Details\kkempf\english\0200D301_modified method III CandG.dgn
Contracts AT CSD-292595
jhoverton

DocuSign Envelope ID: DEFB30BC-314B-451F-9CEE-4F183FA0E8E0

PROJECT REFERENCE NO.	SHEET NO.
BP3.R002	2C-2

DOCUMENT NOT CONSIDERED FINAL UNLESS ALL SIGNATURES COMPLETED

STATE OF NORTH CAROLINA
DEPT. OF TRANSPORTATION
DIVISION OF HIGHWAYS
RALEIGH, N.C.

ROADWAY DETAIL DRAWING FOR
GUARDRAIL INSTALLATION

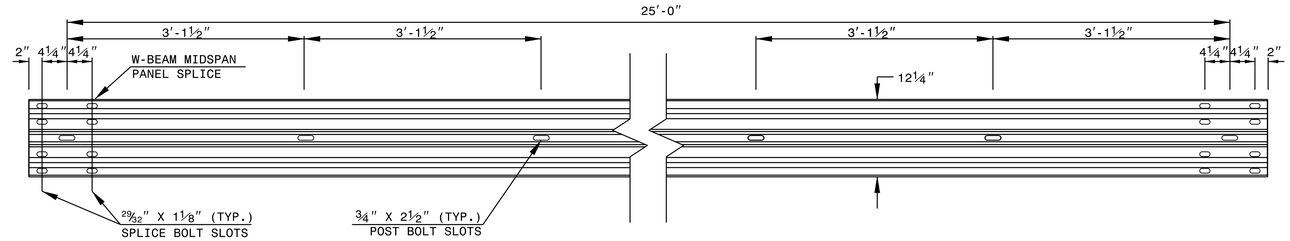

STANDARD W-BEAM GUARDRAIL

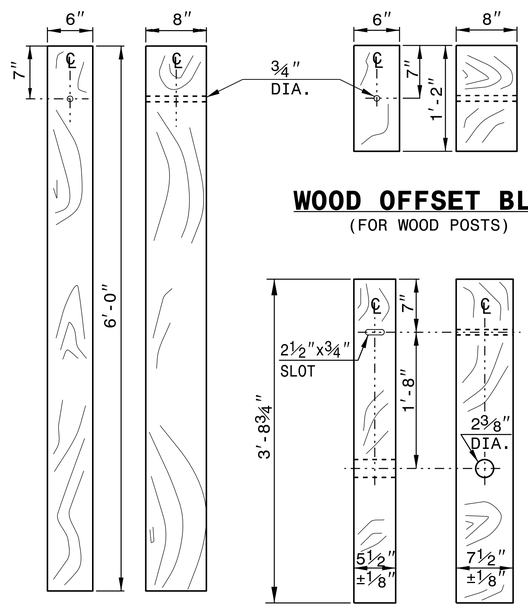

WOOD OFFSET BLOCK
(FOR WOOD POSTS)

STANDARD LINE POST

SHORT WOOD BREAKAWAY POST

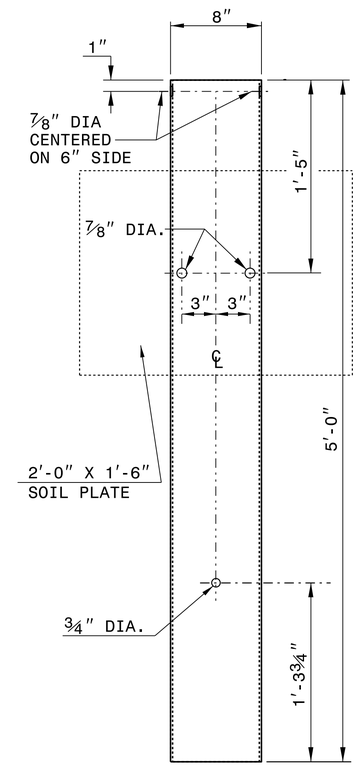

STEEL TUBE
TS 6"x8"x0.1875"

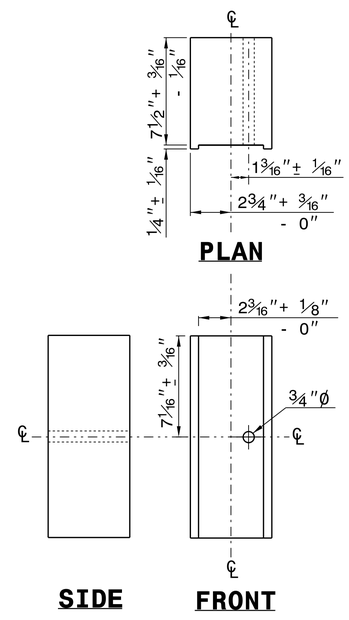

ROUTED OFFSET BLOCK

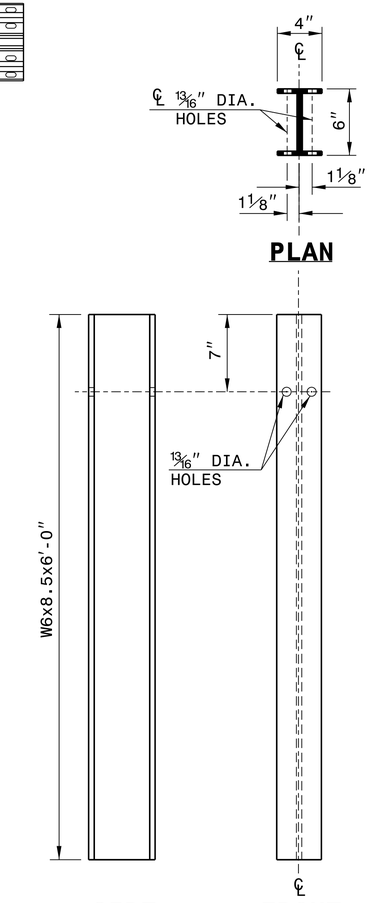

"W6" STEEL POST

SYSTEM PARTS

SHEET 6 OF 8
862D02

STATE OF NORTH CAROLINA
DEPT. OF TRANSPORTATION
DIVISION OF HIGHWAYS
RALEIGH, N.C.

ROADWAY DETAIL DRAWING FOR
GUARDRAIL INSTALLATION

SHEET 6 OF 8
862D02

CONTRACTS STANDARDS AND DEVELOPMENT UNIT
Office 919-707-6950 FAX 919-250-4119

SEE TITLE BLOCK

ORIGINAL BY: J.HOWERTON DATE: 3-7-2018
MODIFIED BY: DATE:
CHECKED BY: DATE:
FILE SPEC.:

DocuSign Envelope ID: DEFB39BC-3148-451F-9CEE-4F18FAAE8E0

14-DEC-2017 10:36
S:\Contracts\Contracts\Special Details\jhowerton\Standard Drawings\2018 Standard Drawings\Details in Lieu of Standards\Division 8\0862d0301.dgn
jhowerton AT CSD-292595

STATE OF NORTH CAROLINA
DEPT. OF TRANSPORTATION
DIVISION OF HIGHWAYS
RALEIGH, N.C.

ROADWAY DETAIL DRAWING FOR
STRUCTURE ANCHOR UNITS
GUARDRAIL ANCHOR UNIT, TYPE III
FOR ATTACHMENT TO RAIL ON BRIDGE

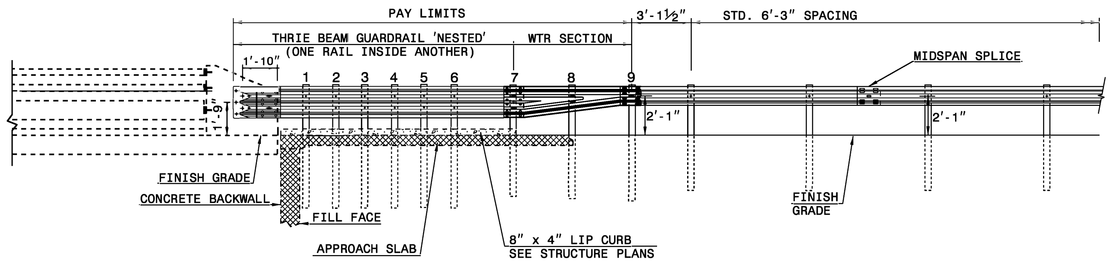

ELEVATION

NOTE:
**POST NOT REQUIRED FOR SKEW ANGLES GREATER THAN 150° OR LESS THAN 30° UNLESS OTHERWISE DIRECTED BY THE ENGINEER.
*THE DISTANCE FROM END OF BRIDGE RAIL TO CENTER LINE OF THE FIRST POST SHOULD BE 11½" IF CONCRETE BACKWALL IS NOT PRESENT.
-SHOULDER BERM GUTTER MUST BE INSTALLED TO THE LIMITS 8" x 4" LIP CURB IS SHOWN IF ANCHOR UNIT IS NOT ADJACENT TO AN APPROACH SLAB.
-MEASURE GUARDRAIL HEIGHT FROM THE TOP OF ADJACENT SURFACE (SHOULDER, BERM, OR GUTTER).
-LAP JOINTS IN THE DIRECTION OF TRAFFIC FLOW.
-SEE SHEET 3 FOR POST SECTIONS 1 THRU 9.

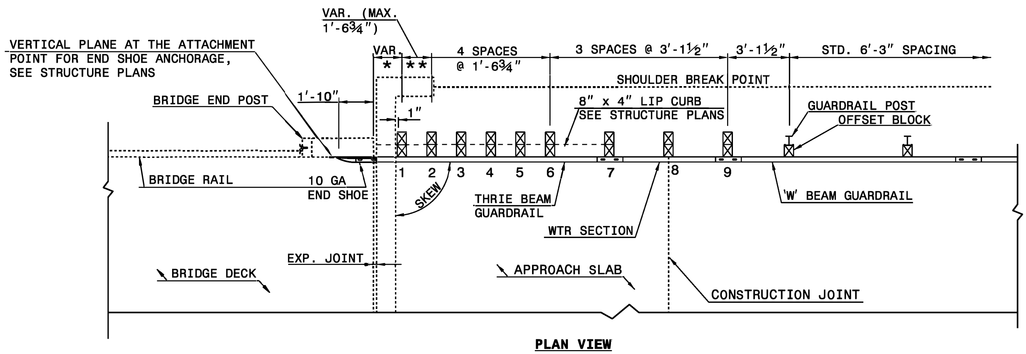

PLAN VIEW

GUARDRAIL ANCHOR UNIT, TYPE III FOR ATTACHMENT TO RAIL ON BRIDGE

SHEET 1 OF 7
862D03

STATE OF NORTH CAROLINA
DEPT. OF TRANSPORTATION
DIVISION OF HIGHWAYS
RALEIGH, N.C.

ROADWAY DETAIL DRAWING FOR
STRUCTURE ANCHOR UNITS
GUARDRAIL ANCHOR UNIT, TYPE III FOR ATTACHMENT TO RAIL ON BRIDGE - SUB REGIONAL TIER

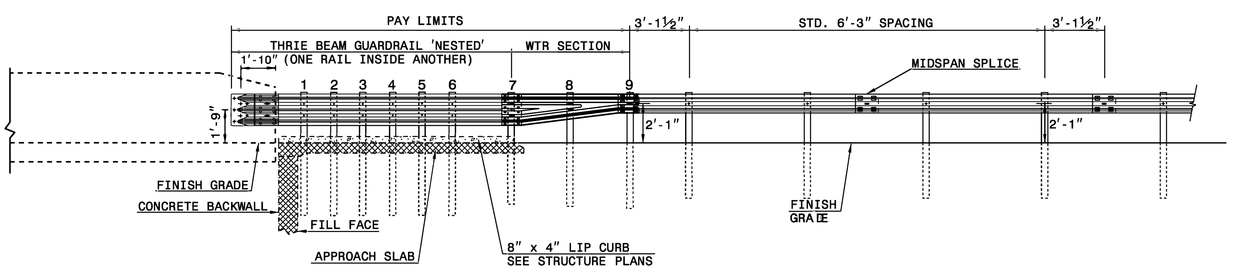

ELEVATION

NOTE:
**POST NOT REQUIRED FOR SKEW ANGLES GREATER THAN 150° OR LESS THAN 30° UNLESS OTHERWISE DIRECTED BY THE ENGINEER.
*THE DISTANCE FROM END OF BRIDGE RAIL TO CENTER LINE OF THE FIRST POST SHOULD BE 11½" IF CONCRETE BACKWALL IS NOT PRESENT.
-SHOULDER BERM GUTTER MUST BE INSTALLED TO THE LIMITS 8" x 4" LIP CURB IS SHOWN IF ANCHOR UNIT IS NOT ADJACENT TO AN APPROACH SLAB.
-MEASURE GUARDRAIL HEIGHT FROM THE TOP OF ADJACENT SURFACE (SHOULDER, BERM, OR GUTTER).
-LAP JOINTS IN THE DIRECTION OF TRAFFIC FLOW.
-SEE SHEET 3 FOR POST SECTIONS 1 THRU 9.

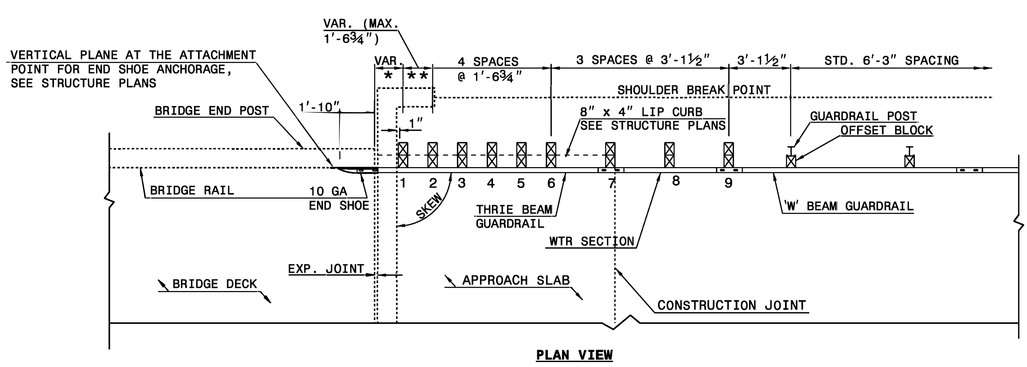

PLAN VIEW

GUARDRAIL ANCHOR UNIT, TYPE III FOR ATTACHMENT TO RAIL ON BRIDGE - SUB REGIONAL TIER

SHEET 2 OF 7
862D03

ORIGINAL BY: J. HOWERTON
MODIFIED BY:
CHECKED BY:
FILE SPEC.:
DATE: 06-22-12
DATE:
DATE:

SEE TITLE BLOCK

CONTRACT STANDARDS AND DEVELOPMENT UNIT
Office 919-707-6950 FAX 919-250-4119

DOCUMENT NOT CONSIDERED FINAL UNLESS ALL SIGNATURES COMPLETED

NORTH CAROLINA PROFESSIONAL SEAL 022071 ENGINEER
5/18/2022

PROJECT REFERENCE NO. BP3.R002
SHEET NO. 2C-3

PROJECT REFERENCE NO.	SHEET NO.
BP3.R002 (SF-810297)	2G-1

GEOTECHNICAL ENGINEER

NORTH CAROLINA PROFESSIONAL SEAL 032171 ENGINEER JINYOUNG PARK

DocuSigned by:

03/23/2022

ATT/CONSULT ENGINEER SIGNATURE DATE

ENGINEER

SIGNATURE DATE

DOCUMENT NOT CONSIDERED FINAL UNLESS ALL SIGNATURES COMPLETED

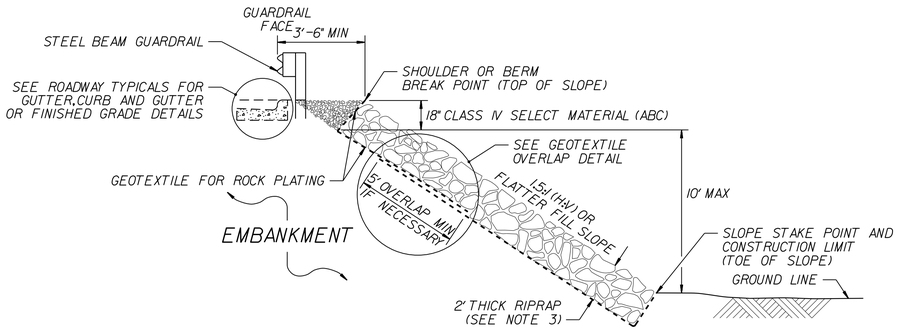

ROCK PLATING DETAIL NO. 1 – TYPICAL SECTION

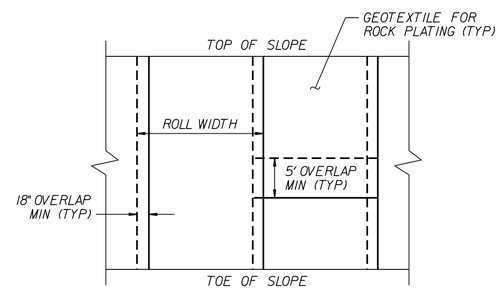

GEOTEXTILE OVERLAP DETAIL

(PLAN VIEW)

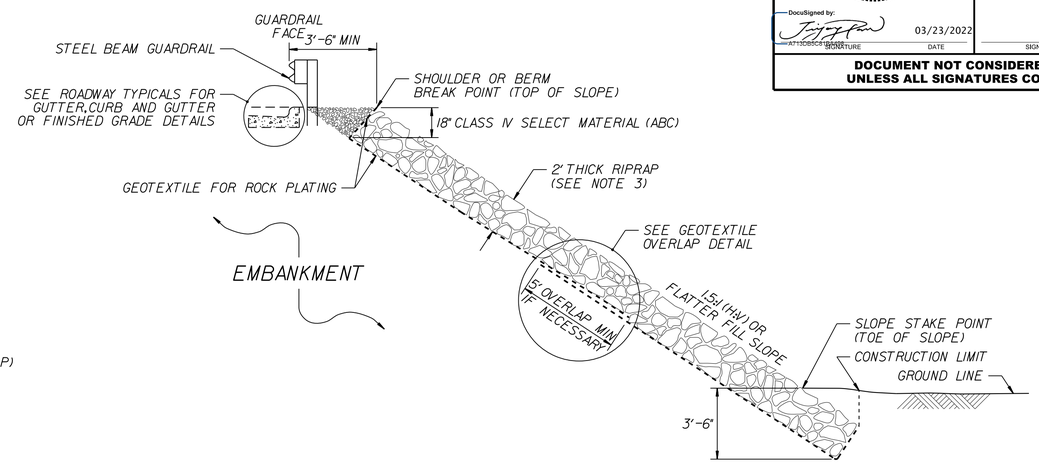

ROCK PLATING DETAIL NO. 2 – TYPICAL SECTION

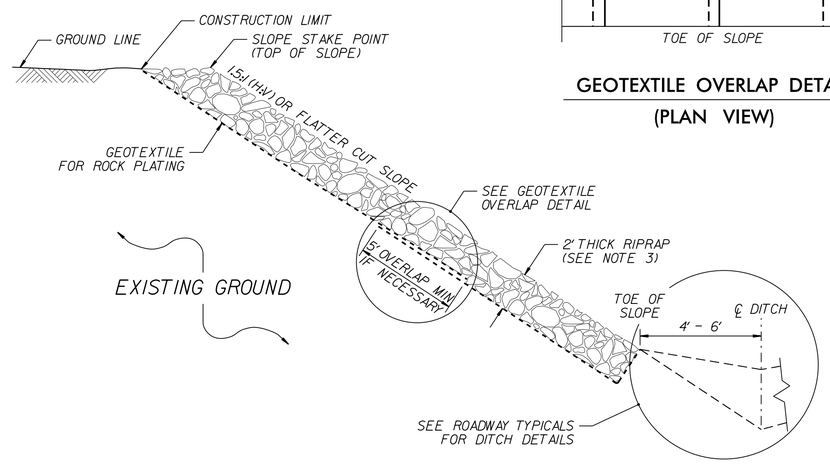

ROCK PLATING DETAIL NO. 3 – TYPICAL SECTION

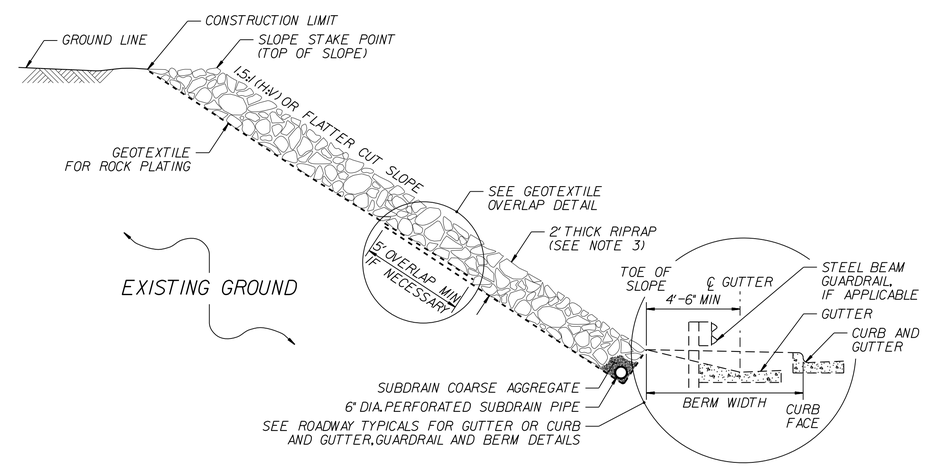

ROCK PLATING DETAIL NO. 4 – TYPICAL SECTION

NOTES:

1. SEE ROADWAY PLANS AND SUMMARY SHEETS FOR ROCK PLATING LOCATIONS.
2. FOR ROCK PLATING,SEE ROCK PLATING (SPECIAL) PROVISION.
3. USE CLASS I,2 OR B RIPRAP UNLESS REQUIRED OTHERWISE IN THE ROADWAY SUMMARY SHEETS.

PREPARED BY: JINYOUNG PARK	DATE: 03/2022
REVIEWED BY: JAMEY BATTS	DATE: 03/2022

STATE OF NORTH CAROLINA DEPARTMENT OF TRANSPORTATION

NORTH CAROLINA DEPARTMENT OF TRANSPORTATION DIVISION OF HIGHWAYS

GEOTECHNICAL ENGINEERING UNIT

MODIFIED STANDARD ROCK PLATING DETAILS

REVISIONS

NO.	BY	DATE	NO.	BY	DATE
1			3		
2			4		

COMPUTED BY: TAR DATE: 11/22/2021
CHECKED BY: TSG DATE: 11/24/2021

STATE OF NORTH CAROLINA
DIVISION OF HIGHWAYS

HNTB NORTH CAROLINA, P.C.
343 E. Six Forks Road, Suite 200
Raleigh, North Carolina 27609
NC License No: C-1554

PROJECT REFERENCE NO.	SHEET NO.
BP3.R002	3B-1

SUMMARY OF EARTHWORK

STATION	STATION	UNCL. EXCAV.	EMBANK. +%	BORROW	WASTE
-L- STA 10+50.00	-L- STA 13+50.81 (BRIDGE)	292	60		232
-L- STA 14+33.19 (BRIDGE)	-L- STA 17+00.00	266	33		233
TOTALS:		558	93		465
WASTE IN LIEU OF BORROW					
PROJECT TOTALS:		558	93		465
EST. 5% TO REPLACE TOP SOIL ON BORROW PIT					
GRAND TOTALS:		558	93		465
SAY:		600			

PAVEMENT REMOVAL SUMMARY

SURVEY LINE	STATION	STATION	LOCATION LT/RT/CL	YD²
-L-	11+00.00	13+68.33	CL	577
-L-	14+20.95	17+00.00	CL	610
			TOTAL:	1,187
			SAY:	1,200

UNDERCUT EXCAVATION PER GEOTECH RECS (CONTINGENCY): 300 CY
SELECT GRANULAR MATERIAL PER GEOTECH RECS (CONTINGENCY): 300 CY
GEOTEXTILE FOR SOIL STABILIZATION PER GEOTECH RECS (CONTINGENCY): 300 SY

Note: Approximate quantities only. Unclassified Excavation, Borrow Excavation, Fine Grading, Clearing and Grubbing, and Removal of Existing Pavement will be paid for at the contract lump sum price for "Grading."

Earthwork quantities are calculated by the Roadway Design Unit. These earthwork quantities are based in part on subsurface data provided by the Geotechnical Engineering Unit.

SHOULDER BERM GUTTER SUMMARY

SURVEY LINE	STATION	STATION	LENGTH (FT)
-L- (LT)	13+21.08	13+39.94	18.86
-L- (LT)	14+44.06	14+63.52	19.46
-L- (RT)	13+21.08	13+39.94	18.86
-L- (RT)	14+44.06	14+63.52	19.46
TOTAL:			76.65'
SAY:			80'

ROW AREA DATA SUMMARY

PARCEL NO.	PROPERTY OWNERS NAMES	PROP. R/W	PERM. UTILITY EASE.	PERM. DRAIN. EASE.	TEMP. DRAINAGE EASE.	CONST. EASE.
1	HARRY C. HOOVER					380.88 SF
2	FRANCISCO MARTINEZ DIAZ					667.92 SF
3	JUDY CATHERINE CARR GARDNER			234.00 SF		1527.23 SF
4	DONALD WESLEY BLAKE AND WIFE MISTY EVENS BLAKE					4272.12 SF

"N" = DISTANCE FROM EDGE OF LANE TO FACE OF GUARDRAIL.
TOTAL SHOULDER WIDTH = DISTANCE FROM EDGE OF TRAVEL LANE TO SHOULDER BREAK POINT.
FLARE LENGTH = DISTANCE FROM LAST SECTION OF PARALLEL GUARDRAIL TO END OF GUARDRAIL.
W = TOTAL WIDTH OF FLARE FROM BEGINNING OF TAPER TO END OF GUARDRAIL.
G = GATING IMPACT ATTENUATOR TL-3
NG = NON-GATING IMPACT ATTENUATOR TL-3

GUARDRAIL SUMMARY

SURVEY LINE	BEG. STA.	END STA.	LOCATION	LENGTH STRAIGHT	LENGTH SHOP CURVED	LENGTH DOUBLE FACED	WARRANT POINT APPROACH END	WARRANT POINT TRAILING END	"N" DIST. FROM E.O.L.	TOTAL SHOUL. WIDTH	FLARE LENGTH APPROACH END	FLARE LENGTH TRAILING END	W APPROACH END	W TRAILING END	ANCHORS XI MOD	ANCHORS TYPE III	ANCHORS GREU TL-3	ANCHORS M-350	ANCHORS XIII	ANCHORS CAT-1	ANCHORS VI MOD	ANCHORS BIC	ANCHORS AT-1	IMPACT ATTENUATOR TYPE 350 EA	IMPACT ATTENUATOR TYPE 350 G	IMPACT ATTENUATOR TYPE 350 NG	SINGLE FACED GUARDRAIL	REMOVE EXISTING GUARDRAIL	REMOVE AND STOCKPILE EXISTING GUARDRAIL	REMARKS
-L-	12+71.08	13+50.81 (BRIDGE)	LT	79.73'				13+50.81 (BRIDGE)	5.42'	8.42'-9.42'		50'		1.0'		1	1													
-L-	12+71.08	13+50.81 (BRIDGE)	RT	79.73'			13+50.81 (BRIDGE)		5.42'	8.42'-9.42'	50'		1.0'			1	1													
-L-	14+33.19 (BRIDGE)	15+13.52	LT	80.33'			14+33.19 (BRIDGE)		5.42'	8.42'-9.42'		50'		1.0'		1	1													
-L-	14+33.19 (BRIDGE)	15+13.52	RT	80.33'				14+33.19 (BRIDGE)	5.42'	8.42'-9.42'	50'		1.0'			1	1													
			SUBTOTAL:	320.12'												4	4													
			GREU TL-3: 4@50'	-200'																										
			TYPE III:4@18.75'	-75'																										
			TOTAL:	45.12'												4	4													
			SAY:	50.00'												4	4													
			5 ADDITIONAL POST																											

LIST OF PIPES, ENDWALLS, ETC. (FOR PIPES 48" & UNDER)

| STATION | LOCATION (LT,RT, OR CL) | STRUCTURE NO. FROM | STRUCTURE NO. TO | TOP ELEVATION | INVERT ELEVATION | INVERT ELEVATION | SLOPE CRITICAL | CAAP 12" | CAAP 15" | CAAP 18" | CAAP 24" .064 | CAAP 30" .079 | CAAP 36" .109 | CAAP 42" | CAAP 48" | BITUMINOUS COATED C.S. PIPE TYPE B (UNLESS NOTED OTHERWISE) 12" | 15" | 18" | 24" .064 | 24" .064 | 24" .064 | 30" .079 | 36" .079 | 36" .109 | 42" | 48" .109 | CLASS IV R.C. PIPE OR C.S. PIPE, TYPE IR OR HDPE PIPE, TYPE S OR D 12" | 15" | 18" | 24" | 30" | 36" | 42" | 48" | 15" SIDE DRAIN PIPE | 18" SIDE DRAIN PIPE | 24" SIDE DRAIN PIPE | ENDWALLS STD. 838.01, STD. 838.11 OR STD. 838.80 (UNLESS NOTED OTHERWISE) CU. YDS. R.C.P. | ENDWALLS CU. YDS. C.S.P. | QUANTITIES FOR DRAINAGE STRUCTURES * TOTAL L.F. FOR PAY QUANTITY SHALL BE COL. "A" + (1.3 X COL. "B") PER EACH (0' THRU 5.0') | LIN. FT. A 5.0' THRU 10.0' | LIN. FT. B 10.0' AND ABOVE | C.B. STD. 840.01 OR STD. 840.02 | FRAME, GRATES AND HOOD STANDARD 840.03 TYPE OF GRATE E | TYPE OF GRATE F | TYPE OF GRATE G | D.I. STD. 840.14 OR STD. 840.15 | D.I. FRAME & GRATE STD. 840.16 | G.D.I. TYPE "A" STD. 840.17 OR 840.26 | G.D.I. TYPE "B" STD. 840.18 OR 840.27 | G.D.I. TYPE "D" STD. 840.19 OR 840.28 | G.D.I. FRAME WITH GRATE STD. 840.22 | G.D.I. FRAME WITH TWO GRATES STD. 840.22 | G.D.I. (N.S.) FRAME WITH GRATE STD. 840.24 | G.D.I. (N.S.) FRAME WITH TWO GRATES STD. 840.24 | T.B.D.I. (N.S.) FRAME AND TWO GRATES STD. 840.29 | J.B. STD. 840.31 OR 840.32 | TB GRATED D.I., TYPE 'B' STD. 840.35 | CORR. STEEL ELBOWS NO. & SIZE | CONC. COLLARS CL. "B" C.Y. STD 840.72 | CONC. & BRICK PIPE PLUG, C.Y. STD. 840.71 | PIPE REMOVAL LIN.FT. | REMARKS |
|---|---|---|---|---|---|---|---|---|---|---|---|---|---|---|---|---|---|---

COMPUTED BY: Tyler C. Bottoms DATE: 1-05-2022
CHECKED BY: Jinyoung Park DATE: 3-23-2022

(12-17-19)

STATE OF NORTH CAROLINA
DIVISION OF HIGHWAYS

PROJECT NO.	SHEET NO.
BP3.R002.1 (SF-810297)	3G-1

SUMMARY OF SUBSURFACE DRAINAGE

LINE	Station	Station	Location LT/RT/CL	Drain Type* UD/BD/SD	LF
CONTINGENCY				SD	200
				TOTAL LF:	200

*UD = Underdrain
*BD = Blind Drain
*SD = Subsurface Drain

SUMMARY OF ROCK PLATING

LINE	Beginning Slope (H:V)	Approx. Station	Ending Slope (H:V)	Approx. Station	Location LT/RT	Rock Plating Detail No. 1/2/3/4**	Riprap Class* 1/2/B	Rock Plating SY
-L-	2.5:1	12+75 ±	2:1	13+40 ±	RT	1		70
-L-	2:1	14+44 ±	2.5:1	15+00 ±	RT	1		40
							TOTAL SY:	110

*Use Class 1, 2 or B riprap if riprap class is not shown for rock plating location.
** See the Modified Standard Rock Plating Details Plan Sheet

DocuSign Envelope ID: D927C0C2-BBB0-4C2D-BD36-06E373FD7F57

HNTB
HNTB NORTH CAROLINA, P.C.
343 E. Six Forks Road, Suite 200
Raleigh, North Carolina 27609
NC License No: C-1554

PROJECT REFERENCE NO.	SHEET NO.
BP3.R002	4
R/W SHEET NO.	

ROADWAY DESIGN ENGINEER — NORTH CAROLINA PROFESSIONAL SEAL 043122 ENGINEER — BRIAN T. PARKERWELL — 5/17/2022

HYDRAULICS ENGINEER — NORTH CAROLINA PROFESSIONAL SEAL 40801 ENGINEER — PAUL A. NEWTON — 5/17/2022

DOCUMENT NOT CONSIDERED FINAL UNLESS ALL SIGNATURES COMPLETED

8/17/99

REVISIONS

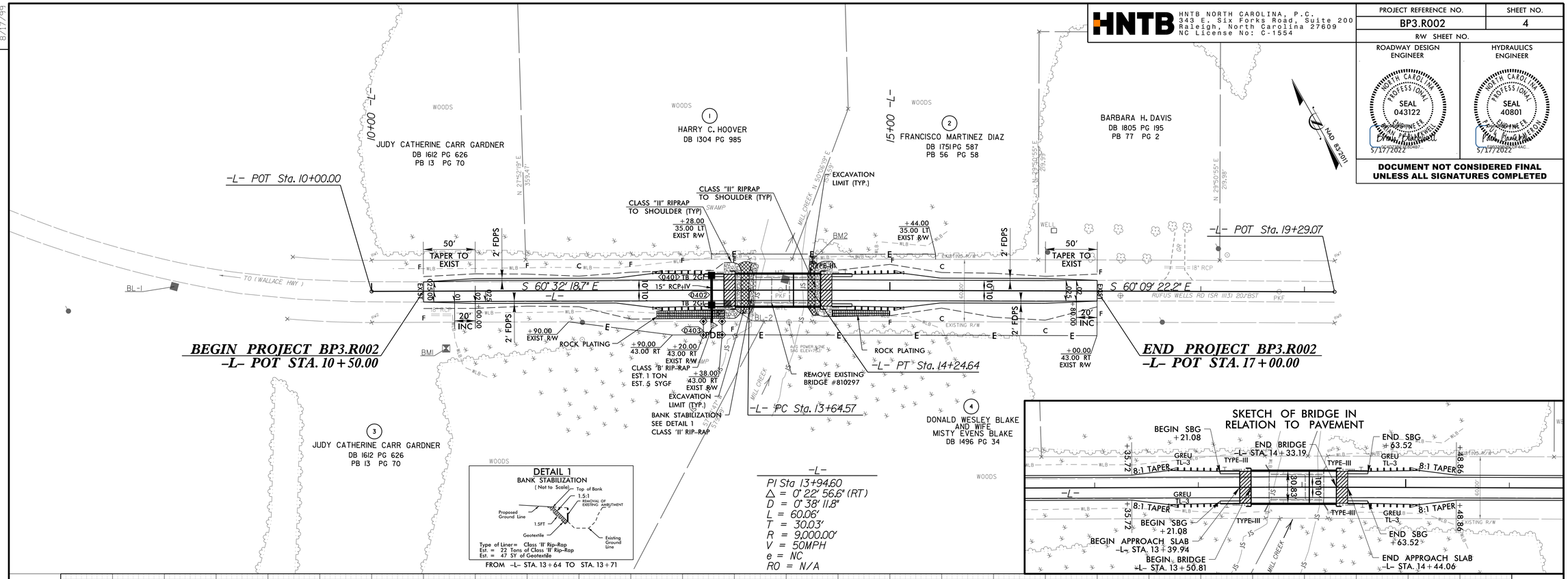

-L-

PI Sta 13+94.60
Δ = 0° 22' 56.6" (RT)
D = 0° 38' 11.8"
L = 60.06'
T = 30.03'
R = 9,000.00'
V = 50MPH
e = NC
RO = N/A

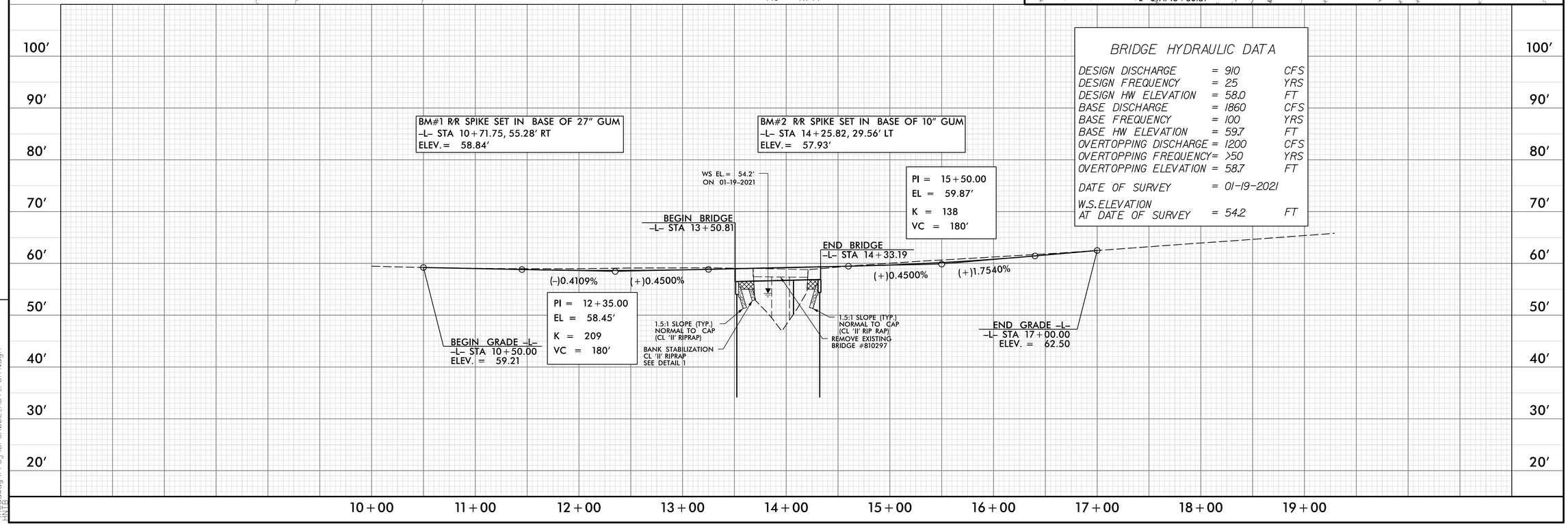

BRIDGE HYDRAULIC DATA

DESIGN DISCHARGE	= 910	CFS
DESIGN FREQUENCY	= 25	YRS
DESIGN HW ELEVATION	= 58.0	FT
BASE DISCHARGE	= 1860	CFS
BASE FREQUENCY	= 100	YRS
BASE HW ELEVATION	= 59.7	FT
OVERTOPPING DISCHARGE	= 1200	CFS
OVERTOPPING FREQUENCY	= >50	YRS
OVERTOPPING ELEVATION	= 58.7	FT
DATE OF SURVEY	= 01-19-2021	
W.S. ELEVATION AT DATE OF SURVEY	= 54.2	FT

14-APR-2022 13:32
HNTB Drawing(Proj)\BP3R002_RDY_PSH4.dgn

STATE	STATE PROJECT REFERENCE NO.	SHEET NO.	TOTAL SHEETS
N.C.	BP3.R002	RW01	05

STATE OF NORTH CAROLINA
DIVISION OF HIGHWAYS

SURVEY CONTROL, EXISTING CENTERLINES, RIGHT OF WAY, EASEMENTS AND PROPERTY TIES

SAMPSON COUNTY

TIP PROJECT: BP3.R002

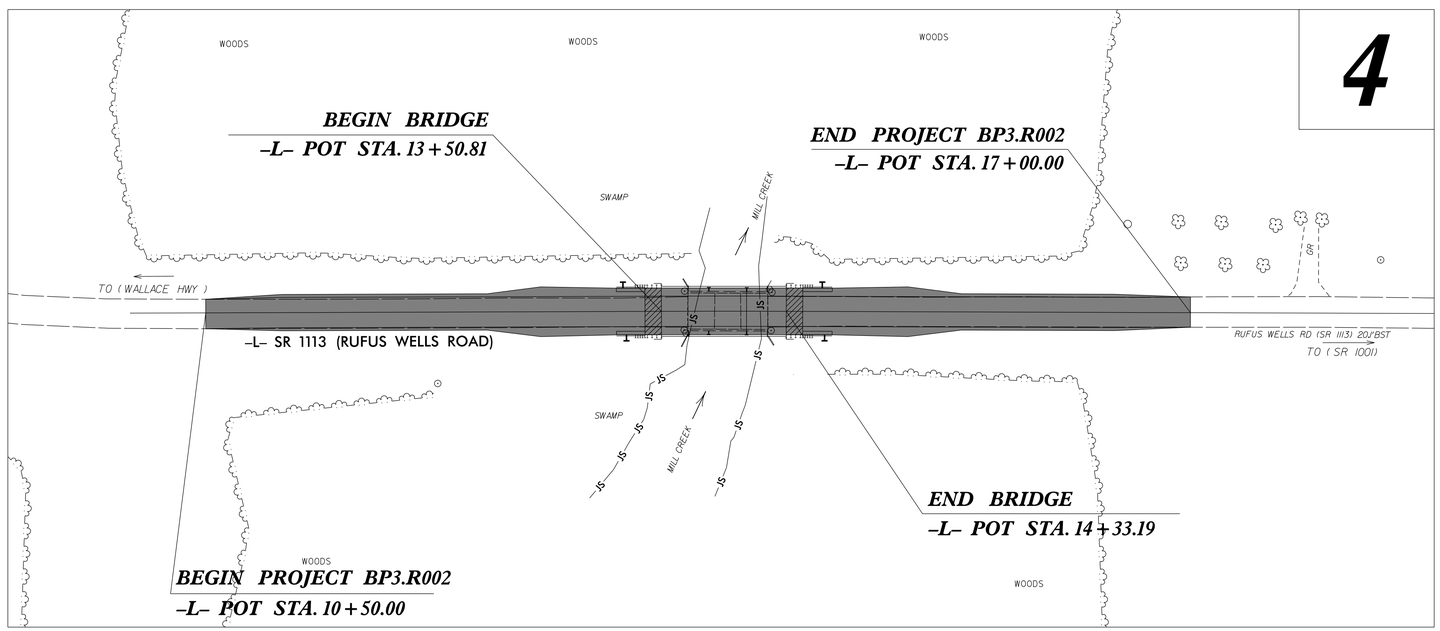

NAD 83 NA 2011

GRAPHIC SCALE

50 25 0 50 100

PLANS

DATUM DESCRIPTION

THE LOCALIZED COORDINATE SYSTEM DEVELOPED FOR THIS PROJECT IS BASED ON THE STATE PLANE COORDINATES ESTABLISHED BY NCGS FOR MONUMENT "GPS2" WITH NAD 83/NA 2011 STATE PLANE GRID COORDINATES OF NORTHING: 347627.929(ft) EASTING: 2255743.345(ft) ELEVATION: 67.789(ft) THE AVERAGE COMBINED GRID FACTOR USED ON THIS PROJECT (GROUND TO GRID) IS: 0.9999206433 THE N.C. LAMBERT GRID BEARING AND LOCALIZED HORIZONTAL GROUND DISTANCE FROM "GPS2" TO -L- STATION 10+00.00 IS S 39-33'34.29" E 851.65(ft) ALL LINEAR DIMENSIONS ARE LOCALIZED HORIZONTAL DISTANCES VERTICAL DATUM USED IS NAVD 88

PREPARED IN THE OFFICE OF:
DIVISION 3
LOCATION AND SURVEYS UNIT
5310 BARBADOS BLVD, SUITE 102
CASTLE HAYNE, NORTH CAROLINA 28429

2018 STANDARD SPECIFICATIONS

RIGHT OF WAY DATE:	*LETTING DATE:*
01/26/2022	*07/07/2022*

PROFESSIONAL LAND SURVEYOR

NORTH CAROLINA PROFESSIONAL SEAL L-4526 LAND SURVEYOR CHRISTOPHER J. SAWYER

DocuSigned by: Christopher J. Sawyer 04/13/2022

SIGNATURE: *Date:*

STATE OF NORTH CAROLINA DEPARTMENT OF TRANSPORTATION

09/08/99

13-APR-2022 16:19
S:\Units\Div03\Projects\BRIDGE\Sampson\BI-0297\Working\150 series sheets\BI0297_ls_RW01_220324.dgn
mjduval AT LS-299896

SURVEY CONTROL SHEET

W/ EXISTING CENTERLINE ALIGNMENTS PRIOR TO CONSTRUCTION

PROJECT REFERENCE NO.	SHEET NO.
BP3.R002	RW02C-1

Location and Surveys

DIVISION 3
LOCATION AND SURVEYS UNIT
5310 BARBADOS BLVD., SUITE 102
CASTLE HAYNE, N.C., 28429

PROJECT SURVEYOR

NORTH CAROLINA PROFESSIONAL SEAL L-4526 LAND SURVEYOR CHRISTOPHER J. SAWYER

DOCUMENT NOT CONSIDERED FINAL UNLESS ALL SIGNATURES COMPLETED

REVBL

POINT	DESC.	NORTH	EAST	ELEVATION	BL STATION
GPS1	GPS CAP & REBAR	347021.6400	2254863.3950	70.34	5+00.00
GPS2	GPS CAP & REBAR	347627.9290	2255743.3450	67.79	15+68.60
BL1	TRV CAP & REBAR	347069.5360	2256122.6100	60.35	22+43.61
BL2	TRV CAP & REBAR	346790.7540	2256577.9910	58.42	27+77.55
BL3	TRV CAP & REBAR	346376.2620	2257298.1680	68.58	36+08.49

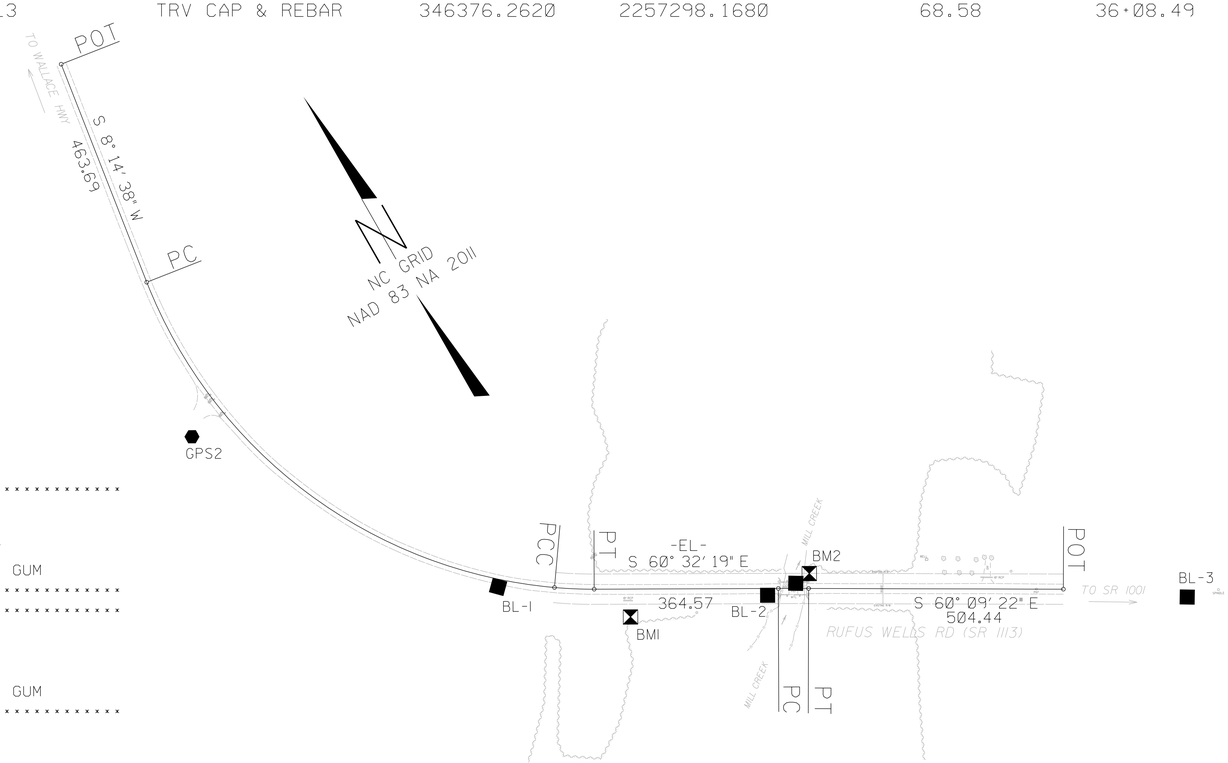


```
*****************************************
BM1        ELEVATION = 58.84
N 346888       E 2256321
BL STATION 25+08.00 51 RIGHT
R/R SPIKE SET IN BASE OF 27" GUM
*****************************************
*****************************************
BM2        ELEVATION = 57.93
N 346787       E 2256671
BL STATION 28+60.00 44 LEFT
R/R SPIKE SET IN BASE OF 10" GUM
*****************************************
```

GPS1

EL

POINT	N	E	BEARING	DIST	DELTA	D	L	T	R
POT	348397.005	2255883.518							
LINE			S 08°14'38.1" W	463.69					
PC	347938.111	2255817.031							
CURVE			S 23°29'38.3" E	1008.55	63°28'33.0"(LT)	05°58'36.6"	1062.03	592.94	958.63
PCC	347013.171	2256219.091							
CURVE			S 57°53'06.8" E	78.70	05°18'23.9"(LT)	06°44'26.4"	78.73	39.39	850.00
PT	346971.334	2256285.746							
LINE			S 60°32'18.7" E	364.57					
PC	346792.024	2256603.175							
CURVE			S 60°20'50.5" E	60.06	00°22'56.6"(RT)	00°38'11.8"	60.06	30.03	9000.00
PT	346762.308	2256655.373							
LINE			S 60°09'22.2" E	504.44					
POT	346511.281	2257092.914							

I, CHRISTOPHER J. SAWYER, PLS, certify that the Project Control was performed under my supervision from an actual GPS survey made under my supervision and the following information was used to perform the survey:

Class of survey: ***AA***
Type of GPS field procedure: NC-VRS-RTN
Dates of survey: AUGUST 2017
Datum/Epoch:NAD83/NA 2011
Published/Fixed-control use: N/A FOR RTN
Localized around: GPS2
Northing:347627.929
Easting:2255743.345
Combined grid factor:0.9999206433
Geoid model:G 12NC
Units:US SURVEY FEET

I also certify that the Baseline Control for this project was completed under my direct and responsible charge from an actual survey made under my supervision; that all horizontal closures had a minimum ratio of precision of 1:20,000 (Class AA) and Vertical accuracy to Class A. Field work was performed from AUGUST 2017 , and all coordinates are based on NAD 83/2011 and all elevations are based on NAVD 88; that this survey was performed to meet the requirements of 21NCAC 56.1600 as applicable.

This 13TH day of APRIL, 2022.

DocuSigned by:
Christopher J. Sawyer
97006B2E1D214B7...

Professional Land Surveyor L-4526

NOTES:

1. PROJECT CONTROL WAS ESTABLISHED USING GNSS, THE GLOBAL NAVIGATION SATELLITE SYSTEM.

2. THE SURVEY CONTROL DATA FOR THIS PROJECT HAS BEEN COMPILED FROM VARIOUS SOURCES. IF FURTHER INFORMATION REGARDING PROJECT CONTROL IS NEEDED, PLEASE CONTACT THE LOCATION AND SURVEYS UNIT.

6/2/99

REVISIONS

13-APR-2022 16:43
S:\Units\Div03\Projects\BRIDGE\Sampson\81-0297\Working\150 series sheets\810297_ls_RW02C-1_220324.dgn
mjduval AT LS-299896

PROPOSED ALIGNMENT CONTROL SHEET

PROJECT REFERENCE NO.	SHEET NO.
BP3.R002	RW02D-1

Location and Surveys

DIVISION 3
LOCATION AND SURVEYS UNIT
5310 BARBADOS BLVD. SUITE 102
CASTLE HAYNE, N.C. 28429

PROJECT SURVEYOR

NORTH CAROLINA PROFESSIONAL SEAL L-4526 LAND SURVEYOR CHRISTOPHER J. SAWYER

DOCUMENT NOT CONSIDERED FINAL UNLESS ALL SIGNATURES COMPLETED

I, Christopher J. Sawyer, PLS, certify that the data compiled came from available surveys/mapping performed by others and provided to me by NCDOT and do not certify to the accuracy or quality of the individual data sources.

This 13th day of April, 2022.

DocuSigned by:
Christopher J. Sawyer
5F0DC62E1D21427...

Professional Land Surveyor L-4526

L

TYPE	STATION	NORTH	EAST
POT	10+00.00	346971.3345	2256285.7464
PC	13+64.57	346792.0240	2256603.1746
PT	14+24.64	346762.3076	2256655.3732
POT	19+29.07	346511.2806	2257092.9143

NOTES:

1. PROJECT CONTROL WAS ESTABLISHED USING GNSS, THE GLOBAL NAVIGATION SATELLITE SYSTEM.

2. THE PROPOSED ALIGNMENT CONTROL DATA FOR THIS PROJECT HAS BEEN COMPILED FROM VARIOUS SOURCES. IF FURTHER INFORMATION REGARDING PROJECT CONTROL IS NEEDED, PLEASE CONTACT THE LOCATION AND SURVEYS UNIT.

REVISIONS

6/2/99

13-APR-2022 16:49
S:\Units\Divs\Projects\BRIDGE\Sampson\81-0297\Working\150 series sheets\810297_ls_RW02D-1_220324.dgn
mjduval AT LS-299896

RIGHT OF WAY CONTROL SHEET

PROJECT REFERENCE NO.	SHEET NO.
BP3.R002	RW03E-1

Location and Surveys

DIVISION 3
LOCATION AND SURVEYS UNIT
5310 BARBADOS BLVD., SUITE 102
CASTLE HAYNE, N.C. 28429

PROJECT SURVEYOR

NORTH CAROLINA PROFESSIONAL SEAL L-4526 LAND SURVEYOR CHRISTOPHER J. SAWYER

DOCUMENT NOT CONSIDERED FINAL UNLESS ALL SIGNATURES COMPLETED

I , Christopher J. Sawyer, PLS , certify that the right of way and permanent easement monumentation for this project shown herein was completed under my direct and responsible charge from an actual survey made under my supervision; that all horizontal closures had a minimum ratio of precision of 1:10,000 (Class A). Field work was performed March 1, 2022, and all coordinates are based on NAD83/2011; That this survey was performed to meet the requirements of 21NCAC 56.1600 as applicable.

This 13th day of April, 2022.

DocuSigned by:
Christopher J. Sawyer
C0A0E0E0E0E0E0E...

Professional Land Surveyor L-4526

ROW MARKER PERMANENT EASEMENT

ALIGN	STATION	OFFSET	NORTH	EAST	
L	13+20.00	43.00	346776.50678	2256543.21717	NOT SET - UNDER WATER
L	13+20.00	30.00	346787.82571	2256549.61107	NOT SET - UNDER WATER
L	13+38.00	30.00	346778.97262	2256565.28343	NOT SET - UNDER WATER
L	13+38.00	43.00	346767.65370	2256558.88953	NOT SET - UNDER WATER

NOTES:

1. IF FURTHER INFORMATION REGARDING PROJECT CONTROL IS NEEDED PLEASE CONTACT THE LOCATION AND SURVEYS UNIT.

2. PROJECT CONTROL WAS ESTABLISHED USING GNSS, THE GLOBAL NAVIGATION SATELLITE SYSTEM.

REVISIONS

6/2/99

13-APR-2022 16:51
S:\Units\Divisions\Projects\BRIDGE\Sampson\81-0297\Working\150 series sheets\810297_LS_RW03E-1_220324.dgn
mduval AT LS-294896

PROJECT REFERENCE NO.	SHEET NO.
BP3.R002	RW04

Location and Surveys

DIVISION 3
LOCATION AND SURVEYS UNIT
5310 BARBADOS BLVD. SUITE 102
CASTLE HAYNE, N.C., 28429

PROJECT SURVEYOR

NORTH CAROLINA PROFESSIONAL SEAL L-4526 LAND SURVEYOR CHRISTOPHER J. SAWYER

DOCUMENT NOT CONSIDERED FINAL UNLESS ALL SIGNATURES COMPLETED

I , Christopher J. Sawyer, PLS , certify that the right of way and permanent easement monumentation for this project shown herein was completed under my direct and responsible charge from an actual survey made under my supervision; that all horizontal closures had a minimum ratio of precision of 1:10,000 (Class A). Field work was performed March 1, 2022 and all coordinates are based on NAD83/2011; That this survey was performed to meet the requirements of 21NCAC 56.1600 as applicable.

This 13th day of APRIL, 2022.

DocuSigned by:
Christopher J. Sawyer
6C0C0BE1F2A4F0...

Professional Land Surveyor L-4526

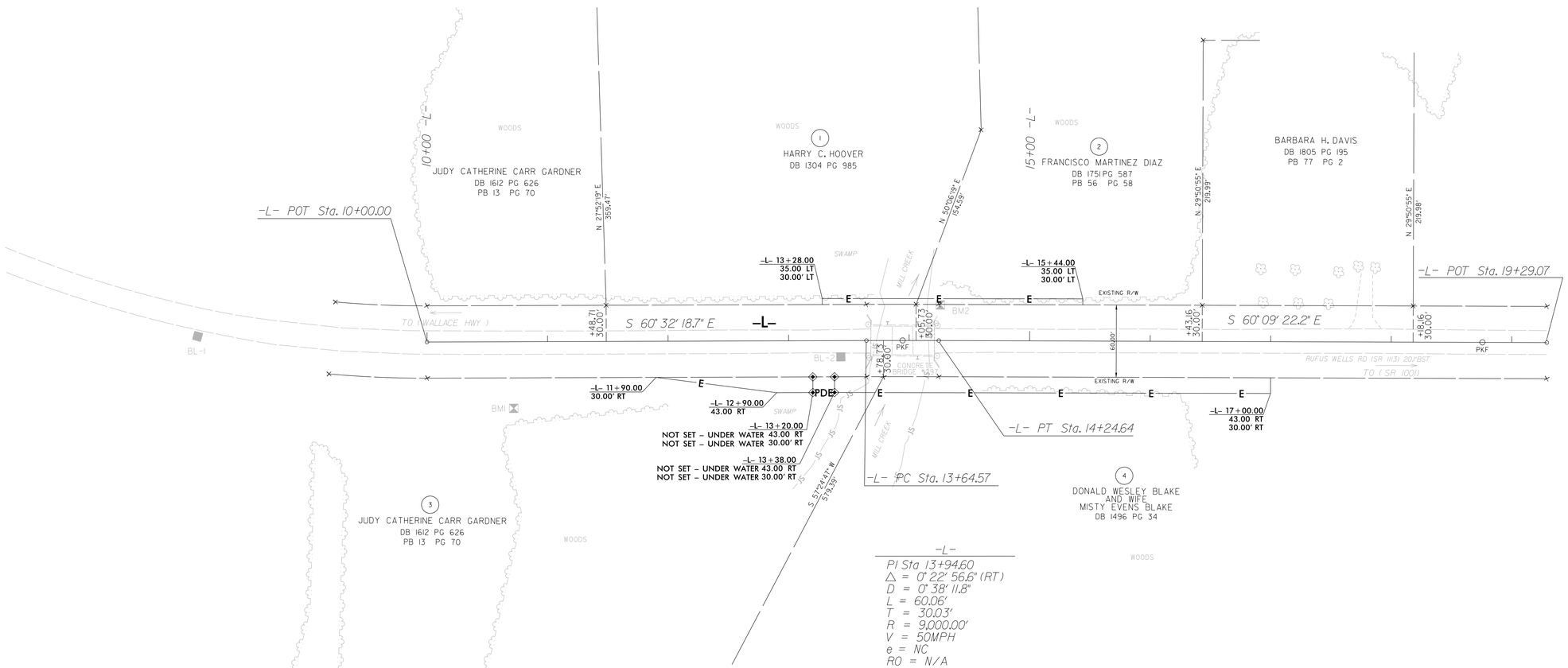

NOTES:

1. IF FURTHER INFORMATION REGARDING PROJECT CONTROL IS NEEDED PLEASE CONTACT THE LOCATION AND SURVEYS UNIT.

2. PROJECT CONTROL WAS ESTABLISHED USING GNSS, THE GLOBAL NAVIGATION SATELLITE SYSTEM.

REVISIONS

6/2/99

13-APR-2022 16:58
S:\Units\Divisions\Projects\BRIDGE\Sampson\81-0297\Working\150 series sheets\810297_ls_rw04_220324.dgn
mjduval AT S-294896

DocuSign Envelope ID: 24ED8AA5-7190-449A-A8AC-2B2E501C2126

STATE OF NORTH CAROLINA
DIVISION OF HIGHWAYS

TRANSPORTATION MANAGEMENT PLAN

SAMPSON COUNTY

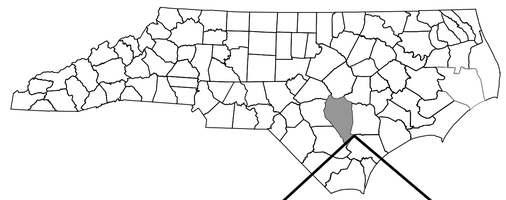

VICINITY MAP

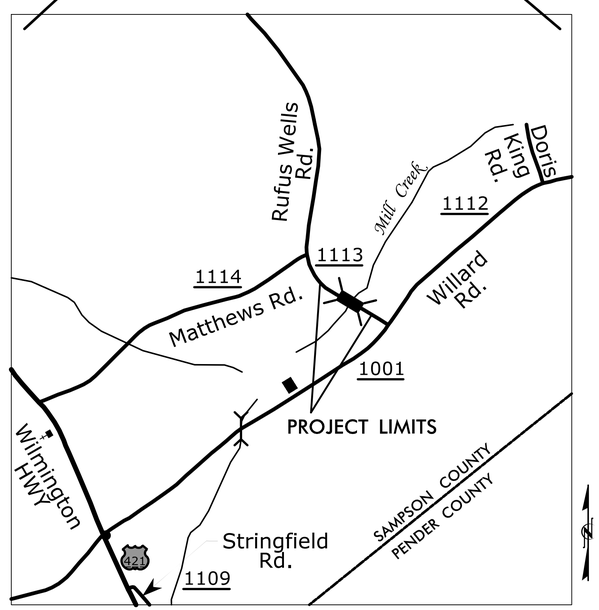

LOCATION: REPLACE BRIDGE NO. 297 OVER MILL CREEK ON SR 1113 (RUFUS WELLS RD.)

PLANS PREPARED BY: HNTB	*NCDOT CONTACTS:*	
H. SHYU, P.E. *PROJECT ENGINEER* J. S. ISZCZYSZYN, P.E. *PROJECT DESIGN ENGINEER*	JESSI LEONARD, P.E. *DIVISION TRAFFIC ENGINEER*	STATE OF NORTH CAROLINA • DEPARTMENT OF TRANSPORTATION •

INDEX OF SHEETS

SHEET NO.	TITLE
TMP-1	TITLE SHEET, VICINITY MAP, INDEX OF SHEETS AND LIST OF APPLICABLE ROADWAY STANDARD DRAWINGS, LEGEND
TMP-2	GENERAL NOTES, PHASING AND DETOUR
TMP-2A	TEMPORARY SIGN DESIGN

ROADWAY STANDARD DRAWINGS

THE FOLLOWING ROADWAY STANDARDS AS SHOWN IN "ROADWAY STANDARD DRAWINGS" CONTRACT STANDARDS AND DEVELOPMENT UNIT - N.C. DEPARTMENT OF TRANSPORTATION - RALEIGH, N.C. DATED JAN 2018 ARE APPLICABLE TO THIS PROJECT AND BY REFERENCE HEREBY ARE CONSIDERED A PART OF THESE PLANS:

STD. NO.	TITLE
1101.03	TEMPORARY ROAD CLOSURES
1101.11	TRAFFIC CONTROL DESIGN TABLES
1110.01	STATIONARY WORK ZONE SIGNS
1145.01	BARRICADES
1205.01	PAVEMENT MARKINGS - LINE TYPES & OFFSETS
1205.02	PAVEMENT MARKINGS - 2 LANE & MULTILANE ROADWAYS
1205.12	PAVEMENT MARKINGS - BRIDGES
1250.01	RAISED PAVEMENT MARKERS - INSTALLATION SPACING
1251.01	RAISED PAVEMENT MARKERS - PERMANENT AND TEMPORARY

LEGEND

GENERAL

NORTH ARROW

TRAFFIC CONTROL DEVICES

BARRICADE (TYPE III)

TEMPORARY SIGNING

STATIONARY SIGN

DOCUMENT NOT CONSIDERED FINAL UNLESS ALL SIGNATURES COMPLETED

HNTB

HNTB NORTH CAROLINA, P.C.
343 E. Six Forks Road, Ste 200
Raleigh, North Carolina 27609
NC License No: C-1554

APPROVED: DocuSigned by: Helen Shyu 0F15075A95E44EF...

DATE: 5/16/2022

SEAL

NORTH CAROLINA PROFESSIONAL SEAL 042517 ENGINEER HELEN SHYU

SHEET NO.
TMP-1

BP3.R002

TIP PROJECT:

5/16/2022
...\BP3.R002_TC_TCP_01_TITLE.dgn
HNTB

DocuSign Envelope ID: 24ED8AA5-7190-449A-A8AC-2B2E501C2126

PROJ. REFERENCE NO.	SHEET NO.
BP3.R002	TMP-2

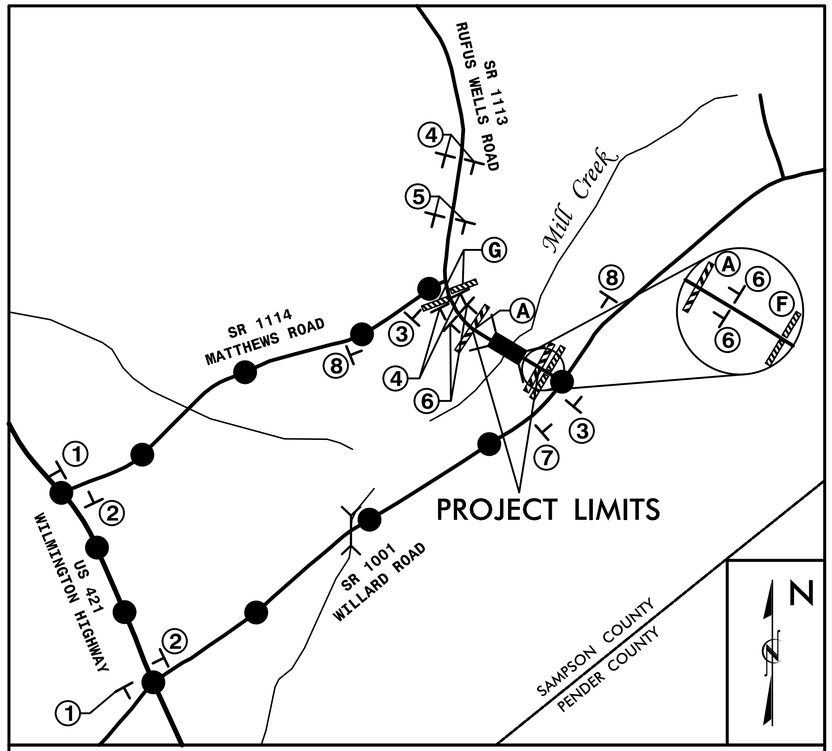

VICINITY MAP — OFFSITE DETOUR

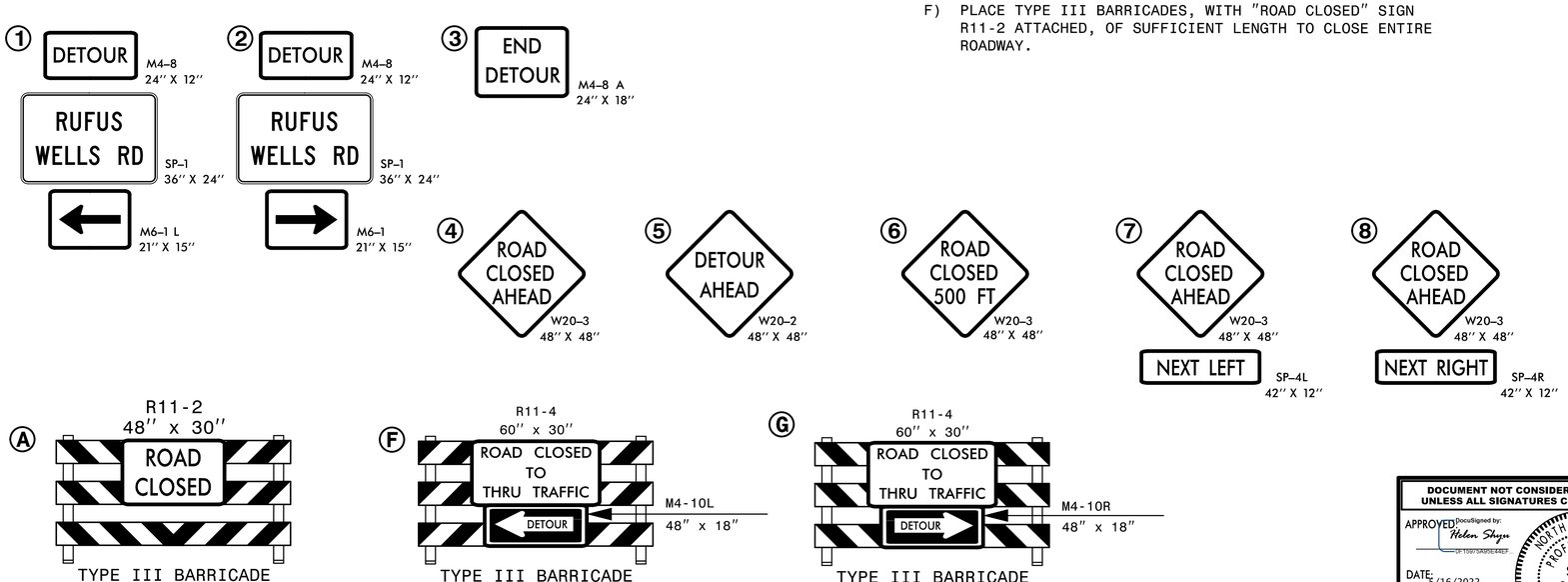

GENERAL NOTES

CHANGES MAY BE REQUIRED WHEN PHYSICAL DIMENSIONS IN THE DETAIL DRAWINGS, STANDARD DETAILS AND ROADWAY DETAILS ARE NOT ATTAINABLE TO MEET FIELD CONDITIONS OR RESULT IN THE DUPLICATE OR UNDESIRED OVERLAPPING OF DEVICES. MODIFICATIONS MAY INCLUDE: MOVING, SUPPLEMENTING, COVERING, OR REMOVAL OF DEVICES AS DIRECTED BY THE ENGINEER.

THE FOLLOWING GENERAL NOTES APPLY AT ALL TIMES FOR THE DURATION OF THE CONSTRUCTION PROJECT EXCEPT WHEN OTHERWISE NOTED IN THE PLAN OR DIRECTED BY THE ENGINEER.

LANE AND SHOULDER CLOSURE REQUIREMENTS

A) REMOVE LANE CLOSURE DEVICES FROM THE LANE WHEN WORK IS NOT BEING PERFORMED BEHIND THE LANE CLOSURE OR WHEN A LANE CLOSURE IS NO LONGER NEEDED OR AS DIRECTED BY THE ENGINEER.

TRAFFIC PATTERN ALTERATIONS

B) NOTIFY THE ENGINEER THIRTY (30) CALENDAR DAYS PRIOR TO ANY TRAFFIC PATTERN ALTERATION.

SIGNING

C) PROVIDE SIGNING AND DEVICES REQUIRED TO CLOSE THE ROAD ACCORDING TO THE ROADWAY STANDARD DRAWINGS AND TRAFFIC CONTROL PLANS.

PROVIDE SIGNING REQUIRED FOR THE OFF-SITE DETOUR ROUTE AS SHOWN ON THIS SHEET.

D) COVER OR REMOVE ALL SIGNS AND DEVICES REQUIRED TO CLOSE THE ROAD WHEN ROAD CLOSURE IS NOT IN OPERATION.

COVER OR REMOVE ALL SIGNS REQUIRED FOR THE OFF-SITE DETOUR WHEN THE DETOUR IS NOT IN OPERATION.

E) ENSURE ALL NECESSARY SIGNING IS IN PLACE PRIOR TO ALTERING ANY TRAFFIC PATTERN.

TRAFFIC CONTROL DEVICES

F) PLACE TYPE III BARRICADES, WITH "ROAD CLOSED" SIGN R11-2 ATTACHED, OF SUFFICIENT LENGTH TO CLOSE ENTIRE ROADWAY.

PAVEMENT MARKING AND MARKERS

G) INSTALL PAVEMENT MARKINGS ON THE FINAL SURFACE AS FOLLOWS:

ROAD NAME	MARKING	MARKERS
(SR 1113) RUFUS WELLS RD	THERMO	RAISED

H) TIE PROPOSED PAVEMENT MARKING LINES TO EXISTING PAVEMENT MARKING LINES.

I) REMOVE/REPLACE ANY CONFLICTING/DAMAGED PAVEMENT MARKINGS.

J) PASSING ZONE WILL BE DETERMINED IN THE FIELD AND MUST BE APPROVED BY THE ENGINEER.

PHASING

PHASE I

PRIOR TO ANY CONSTRUCTION OPERATIONS, PLACE AND COVER OFF-SITE DETOUR SIGNS AS SHOWN ON TMP-2 AND IN ACCORDANCE WITH RSD 1101.03 (SHEET 1 OF 9).

PHASE II

UNCOVER DETOUR SIGNS, CLOSE -L- (SR 1113 / RUFUS WELLS RD) TO TRAFFIC AND CONSTRUCT PROPOSED BRIDGE AND ROADWAY UP TO AND INCLUDING THE FINAL LAYER OF SURFACE COURSE.

PHASE III

UPON COMPLETION OF BRIDGE AND ROADWAY, PLACE FINAL PAVEMENT MARKINGS AND MARKERS IN ACCORDANCE WITH RSD 1205.01, 1205.02, 1205.12, 1250.01 AND 1251.01. REMOVE BARRICADES AND DETOUR SIGNS AND OPEN -L- (SR 1113 / RUFUS WELLS RD) TO TRAFFIC.

HNTB
HNTB NORTH CAROLINA, P.C.
343 E. Six Forks Road, Suite 200
Raleigh, North Carolina 27609
NC License No: C-1554

DOCUMENT NOT CONSIDERED FINAL UNLESS ALL SIGNATURES COMPLETED

APPROVED DocuSigned by: Helen Shyu
CF1597DA95E4B4F...
DATE: 5/16/2022

NORTH CAROLINA PROFESSIONAL SEAL 042517 ENGINEER HELEN SHYU

DIVISION OF HIGHWAYS STATE OF NORTH CAROLINA DEPARTMENT OF TRANSPORTATION WORK ZONE TRAFFIC CONTROL

GENERAL NOTES, PHASING AND DETOUR

5/16/2022
...\BP3_R002_TC_TCP_01_detour.dgn
HNTB

DocuSign Envelope ID: 24ED8AA5-7190-449A-A8AC-2B2E501C2126

PROJ. REFERENCE NO.	SHEET NO.
BP3.R002	TMP-2A

SIGN NUMBER: SP-1
TYPE: D
QUANTITY: 4

SIGN WIDTH: 3'-0"
HEIGHT: 2'-0"
TOTAL AREA: 6.0 Sq.Ft.

BORDER TYPE: RECESSED
RECESS: 0.38"
WIDTH: 0.38"
RADII: 1.5"

NO. Z BARS: N/A
LENGTH: N/A

BACKG COLOR: Fluorescent Orange
COPY COLOR: Black

SYMBOL	X	Y	WID	HT

MAT'L: 0.080" ALUMINUM

DESIGN BY: JAW
CHECKED BY: ADK
PROJECT ID: BP3.R002
DIV: 03
DATE: April 2022

NOTES:

1. Legend and border shall be direct applied non-reflective sheeting.
2. Background shall be Grade B, fluorescent orange, reflective sheeting.
3. To be mounted with Detour signing.

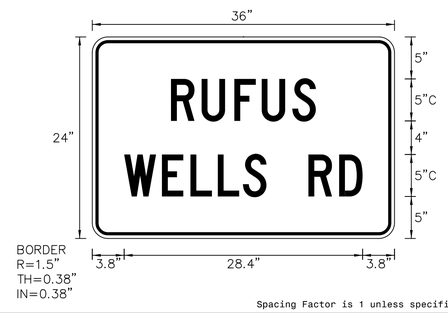

Spacing Factor is 1 unless specified otherwise

LETTER POSITIONS

Letter spacings are to start of next letter

																										Series/Size Text Length
	R	U	F	U	S																					C 2000
9.4	3.7	3.9	3.3	3.6	2.8	9.4																				17.2
	W	E	L	L	S		R	D																		C 2000
3.8	4.5	3.4	3.3	3	2.8	5	3.6	2.8	3.8																	28.4

HNTB
HNTB NORTH CAROLINA, P.C.
343 E. Six Forks Road, Suite 200
Raleigh, North Carolina 27609
NC License No: C-1584

DOCUMENT NOT CONSIDERED FINAL UNLESS ALL SIGNATURES COMPLETED

APPROVED: DocuSigned by: Helen Shyu DF15075A3BE4AE7...
DATE: 3/16/2022

NORTH CAROLINA PROFESSIONAL SEAL 042517 ENGINEER HELEN SHYU

DIVISION OF HIGHWAYS STATE OF NORTH CAROLINA DEPARTMENT OF TRANSPORTATION WORK ZONE TRAFFIC CONTROL

TRANSPORTATION MANAGEMENT PLAN

TEMPORARY SIGN DESIGN

4:21:15 PM
...\BP3.R002_TC_TCP_02A_temp-sign-design.dgn
$$$$USERNAME$$$$

TIP PROJECT: BP3.R002

STATE	STATE PROJECT REFERENCE NO.	SHEET NO.	TOTAL SHEETS
N.C.	BP3.R002	EC-1	

STATE PROJ. NO.	F.A. PROJ. NO.	DESCRIPTION

STATE OF NORTH CAROLINA
DIVISION OF HIGHWAYS

PLAN FOR PROPOSED
HIGHWAY EROSION CONTROL

SAMPSON COUNTY

LOCATION: REPLACE BRIDGE NO. 297 OVER MILL CREEK ON SR 1113 (RUFUS WELLS ROAD)

TYPE OF WORK: GRADING, DRAINAGE, PAVING AND STRUCTURE

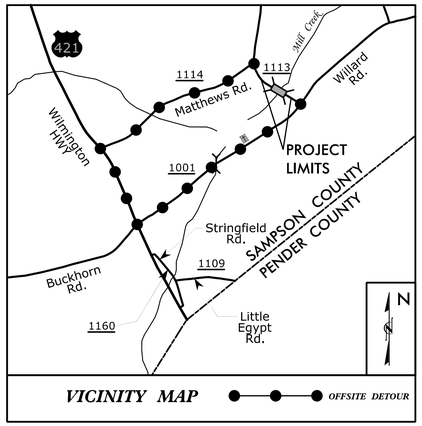

VICINITY MAP — *OFFSITE DETOUR*

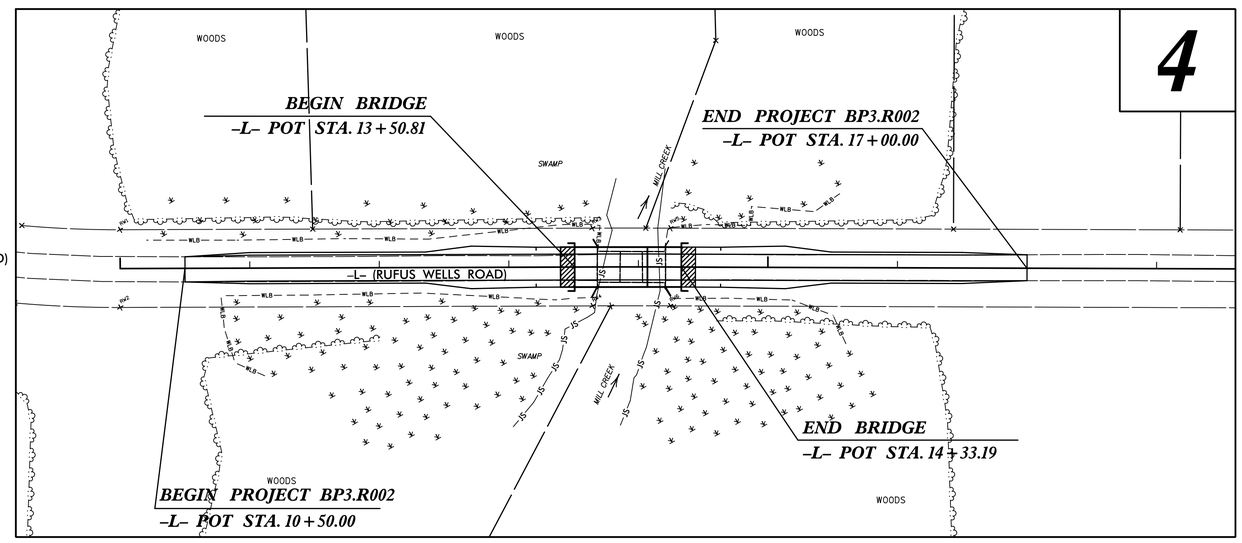

EROSION AND SEDIMENT CONTROL MEASURES

Std. #	Description	Symbol
1630.03	Temporary Silt Ditch	TSD
1630.05	Temporary Diversion	TD
1605.01	Temporary Silt Fence	
1606.01	Special Sediment Control Fence	
1622.01	Temporary Berms and Slope Drains	
1630.02	Silt Basin Type B	
1633.01	Temporary Rock Silt Check Type-A	
	Temporary Rock Silt Check Type-A with Matting and Polyacrylamide (PAM)	
1633.02	Temporary Rock Silt Check Type-B	
	Wattle/Coir Fiber Wattle	EW CW
	Wattle/Coir Fiber Wattle with Polyacrylamide (PAM)	
1634.01	Temporary Rock Sediment Dam Type-A	
1634.02	Temporary Rock Sediment Dam Type-B	
1635.01	Rock Pipe Inlet Sediment Trap Type-A	
1635.02	Rock Pipe Inlet Sediment Trap Type-B	
1630.04	Stilling Basin	
1630.06	Special Stilling Basin	
	Rock Inlet Sediment Trap:	
1632.01	Type A	A
1632.02	Type B	B
1632.03	Type C	C
	Skimmer Basin	
	Tiered Skimmer Basin	
	Infiltration Basin	

GRAPHIC SCALE

50 25 0 50 100

PLANS

THESE EROSION AND SEDIMENT CONTROL PLANS COMPLY WITH THE APPLICABLE REGULATIONS SET FORTH BY THE NCG-010000 GENERAL CONSTRUCTION PERMIT EFFECTIVE APRIL 1, 2019 AND ISSUED BY THE NORTH CAROLINA DEPARTMENT OF ENVIRONMENTAL QUALITY DIVISION OF WATER RESOURCES.

HNTB

HNTB NORTH CAROLINA, P.C.
343 E. Six Forks Road, Suite 200
Raleigh, North Carolina 27609
NC License No: C-1554

PREPARED IN THE OFFICE OF:

HNTB HNTB NORTH CAROLINA, P.C.
343 E. Six Forks Road, Suite 200
Raleigh, North Carolina 27609
NC License No: C-1554

FOR NCDOT DIVISION 3

Designed by:

NATALIE CHAN, P.E. — ***3444***

NAME — *LEVEL III CERTIFICATION NO.*

Roadway Standard Drawings

The following roadway english standards as appear in "Roadway Standard Drawings"- Roadway Design Unit - N. C. Department of Transportation - Raleigh, N. C., dated January 2018 and the latest revison thereto are applicable to this project and by reference hereby are considered a part of these plans.

1604.01	*Railroad Erosion Control Detail*	*1632.01*	*Rock Inlet Sediment Trap Type A*
1605.01	*Temporary Silt Fence*	*1632.02*	*Rock Inlet Sediment Trap Type B*
1606.01	*Special Sediment Control Fence*	*1632.03*	*Rock Inlet Sediment Trap Type C*
1607.01	*Gravel Construction Entrance*	*1633.01*	*Temporary Rock Silt Check Type A*
1622.01	*Temporary Berms and Slope Drains*	*1633.02*	*Temporary Rock Silt Check Type B*
1630.01	*Riser Basin*	*1634.01*	*Temporary Rock Sediment Dam Type A*
1630.02	*Silt Basin Type B*	*1634.02*	*Temporary Rock Sediment Dam Type B*
1630.03	*Temporary Silt Ditch*	*1635.01*	*Rock Pipe Inlet Sediment Trap Type A*
1630.04	*Stilling Basin*	*1635.02*	*Rock Pipe Inlet Sediment Trap Type B*
1630.05	*Temporary Diversion*	*1640.01*	*Coir Fiber Baffle*
1630.06	*Special Stilling Basin*	*1645.01*	*Temporary Stream Crossing*
1631.01	*Matting Installation*		

12/10/2021
...\Design\BP3R002_EC_TSH.dgn

PROJECT REFERENCE NO.	SHEET NO.
BP3.R002	EC-2
R/W SHEET NO.	
ROADWAY DESIGN ENGINEER	HYDRAULICS ENGINEER

SILT FENCE COIR FIBER WATTLE BREAK DETAIL

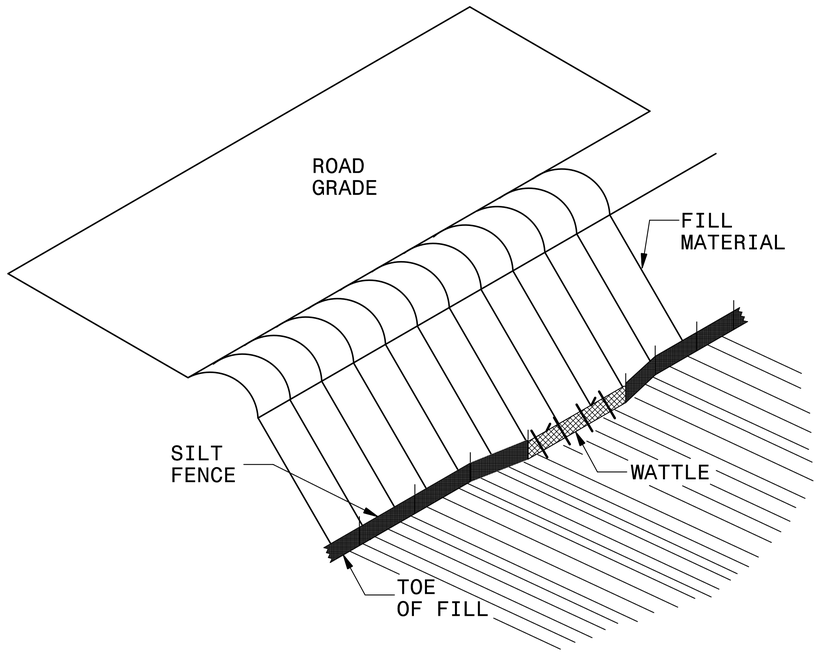

ISOMETRIC VIEW

NOTES:

USE MINIMUM 12 IN. DIAMETER COIR FIBER (COCONUT FIBER) WATTLE AND LENGTH OF 10 FT.

EXCAVATE A 1 TO 2 INCH TRENCH FOR WATTLE TO BE PLACED.

DO NOT PLACE WATTLE ON TOE OF SLOPE.

USE 2 FT. WOODEN STAKES WITH A 2 IN. BY 2 IN. NOMINAL CROSS SECTION.

INSTALL A MINIMUM OF 2 UPSLOPE STAKES AND 4 DOWNSLOPE STAKES AT AN ANGLE TO WEDGE WATTLE TO GROUND.

PROVIDE STAPLES MADE OF 0.125 IN. DIAMETER STEEL WIRE FORMED INTO A U SHAPE NOT LESS THAN 12″ IN LENGTH.

INSTALL STAPLES APPROXIMATELY EVERY 1 LINEAR FOOT ON BOTH SIDES OF WATTLE AND AT EACH END TO SECURE IT TO THE SOIL.

WATTLE INSTALLATION CAN BE ON OUTSIDE OF THE SILT FENCE AS DIRECTED.

INSTALL TEMPORARY SILT FENCE IN ACCORDANCE WITH SECTION 1605 OF THE STANDARD SPECIFICATIONS.

INSET A

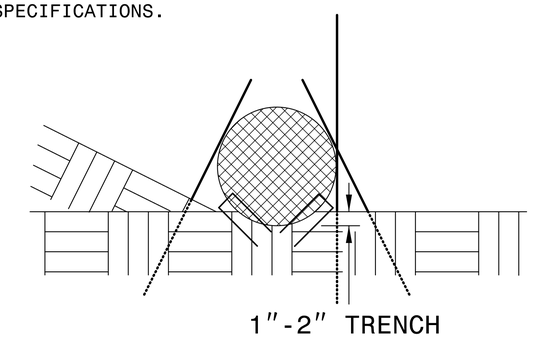

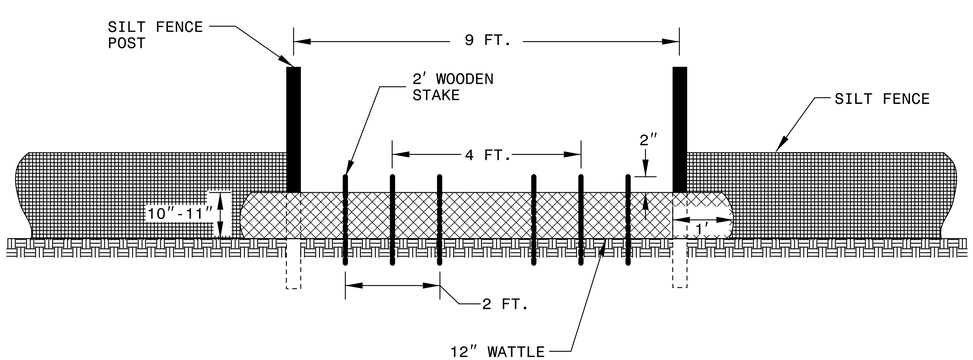

VIEW FROM SLOPE

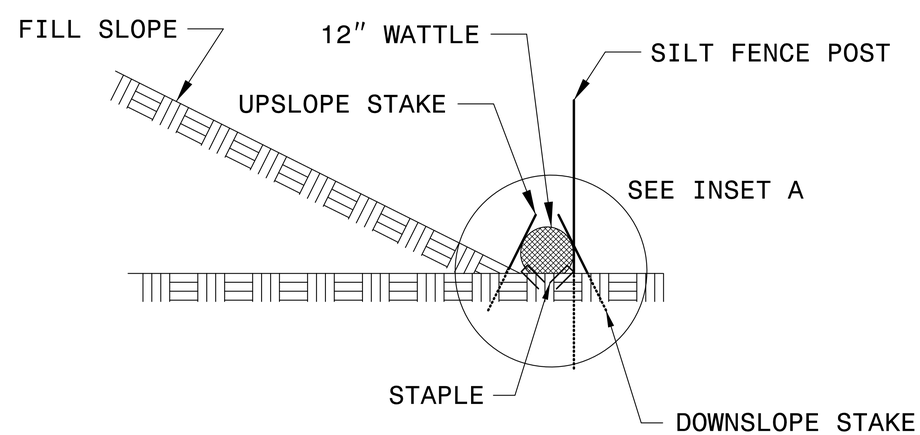

SIDE VIEW

PROJECT REFERENCE NO.	SHEET NO.
BP3.R002	EC-3
ROADWAY DESIGN ENGINEER	HYDRAULICS ENGINEER

DIVISION OF HIGHWAYS
STATE OF NORTH CAROLINA

SOIL STABILIZATION TIMEFRAMES

SITE DESCRIPTION	STABILIZATION TIME	TIMEFRAME EXCEPTIONS
PERIMETER DIKES, SWALES, DITCHES AND SLOPES	7 DAYS	NONE
HIGH QUALITY WATER (HQW) ZONES	7 DAYS	NONE
SLOPES STEEPER THAN 3:1	7 DAYS	IF SLOPES ARE 10' OR LESS IN LENGTH AND ARE NOT STEEPER THAN 2:1, 14 DAYS ARE ALLOWED.
SLOPES 3:1 OR FLATTER	14 DAYS	7 DAYS FOR SLOPES GREATER THAN 50' IN LENGTH.
ALL OTHER AREAS WITH SLOPES FLATTER THAN 4:1	14 DAYS	NONE, EXCEPT FOR PERIMETERS AND HQW ZONES.

8/17/99

HNTB NORTH CAROLINA, P.C. 343 E. Six Forks Road, Suite 200 Raleigh, North Carolina 27609 NC License No: C-1554	PROJECT REFERENCE NO.	SHEET NO.
		EC-4/CONST.4
	R/W SHEET NO.	

NATALIE CHAN, P.E.
EROSION CONTROL
LEVEL III
CERTIFICATION #3444

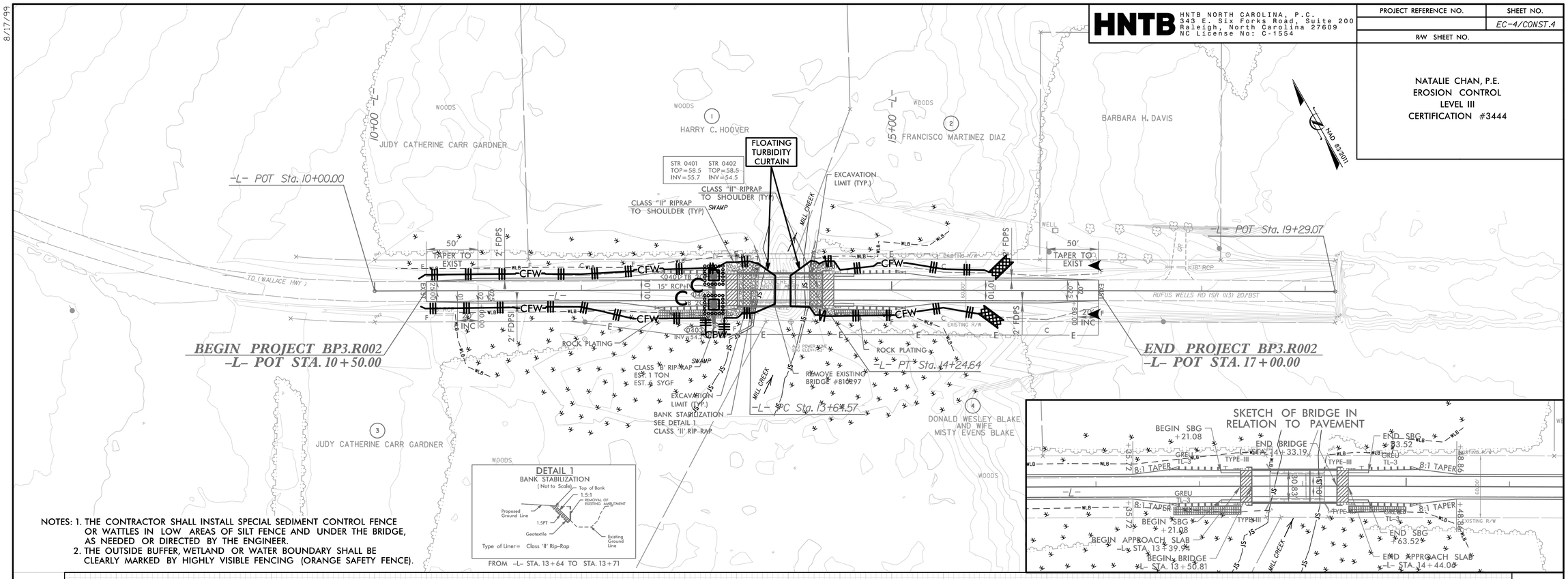

NOTES: 1. THE CONTRACTOR SHALL INSTALL SPECIAL SEDIMENT CONTROL FENCE OR WATTLES IN LOW AREAS OF SILT FENCE AND UNDER THE BRIDGE, AS NEEDED OR DIRECTED BY THE ENGINEER.
2. THE OUTSIDE BUFFER, WETLAND OR WATER BOUNDARY SHALL BE CLEARLY MARKED BY HIGHLY VISIBLE FENCING (ORANGE SAFETY FENCE).

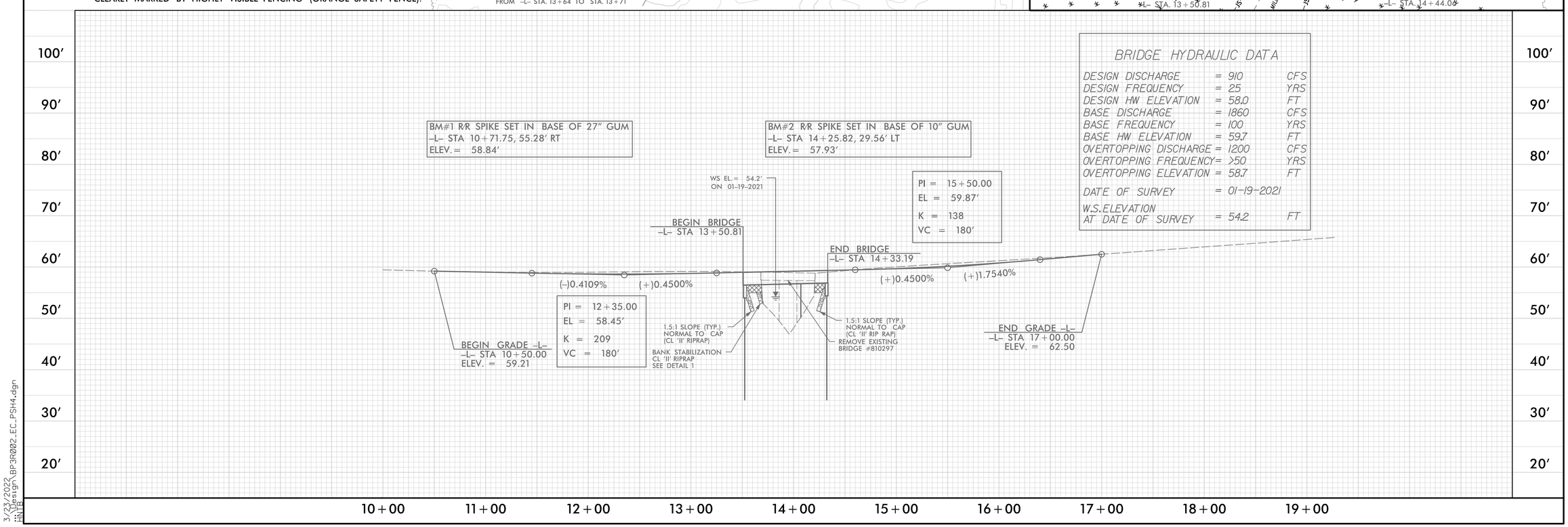

BRIDGE HYDRAULIC DATA

DESIGN DISCHARGE	= 910	CFS
DESIGN FREQUENCY	= 25	YRS
DESIGN HW ELEVATION	= 58.0	FT
BASE DISCHARGE	= 1860	CFS
BASE FREQUENCY	= 100	YRS
BASE HW ELEVATION	= 59.7	FT
OVERTOPPING DISCHARGE	= 1200	CFS
OVERTOPPING FREQUENCY	= >50	YRS
OVERTOPPING ELEVATION	= 58.7	FT
DATE OF SURVEY	= 01-19-2021	
W.S.ELEVATION AT DATE OF SURVEY	= 54.2	FT

3/23/2022
Design_BP3R002_EC_PSH4.dgn
HNTB

TIP PROJECT: BP3.R002

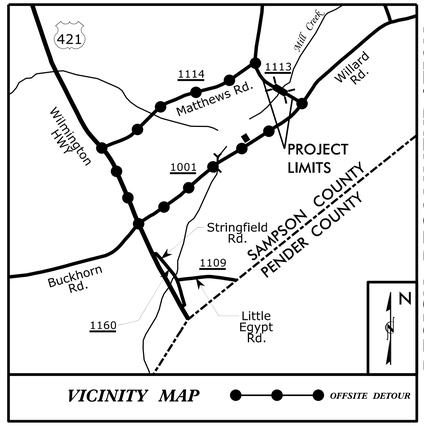

DESIGN RECOMMENDATION PLAN SET

STATE OF NORTH CAROLINA
DIVISION OF HIGHWAYS

UTILITIES BY OTHERS PLANS
SAMPSON COUNTY

LOCATION: REPLACE BRIDGE NO. 297 OVER MILL CREEK ON SR 1113 (RUFUS WELLS ROAD)

TYPE OF WORK: GRADING, DRAINAGE, PAVING, AND STRUCTURE

T.I.P. NO.	SHEET NO.
BP3.R002	UO–1

NOTE:
ALL UTILITY WORK SHOWN ON THIS SHEET WILL BE DONE BY OTHERS. NO PAYMENT WILL BE MADE TO THE CONTRACTOR FOR UTILITY WORK SHOWN ON THIS SHEET.

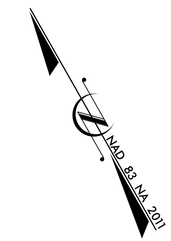

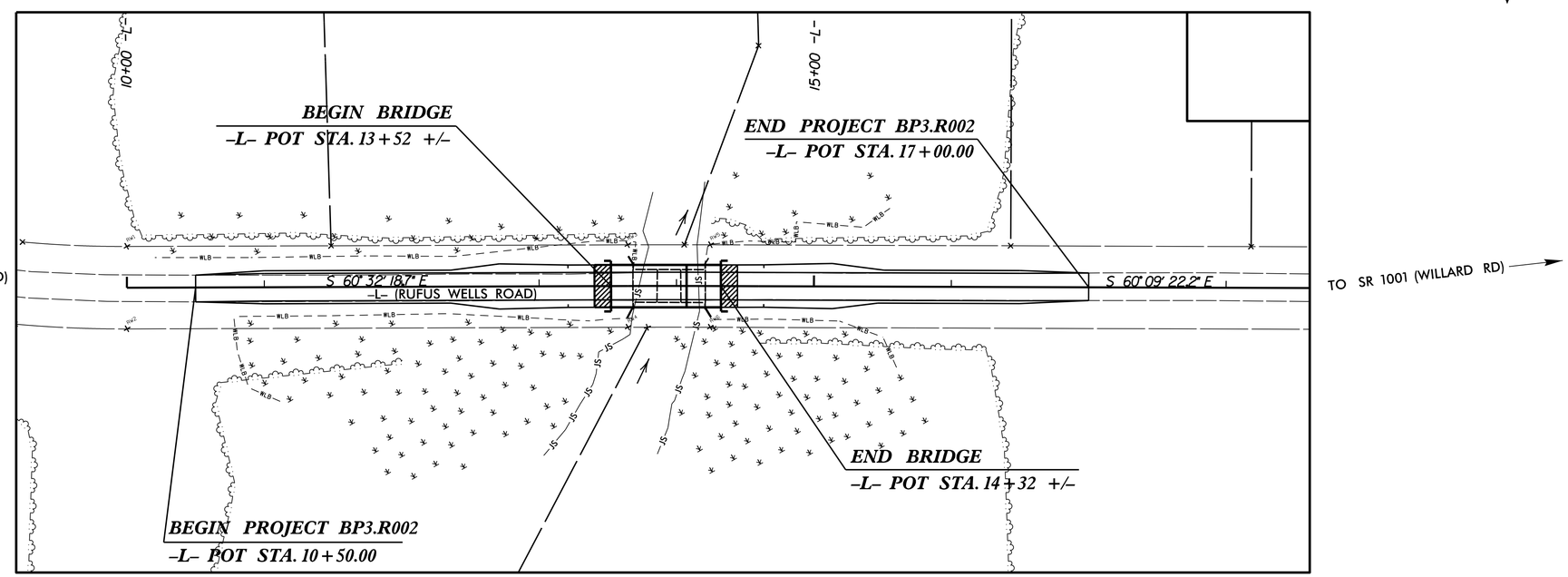

GRAPHIC SCALES

50 25 0 50 100
PLANS

50 25 0 50 100
PROFILE (HORIZONTAL)

10 5 0 10 20
PROFILE (VERTICAL)

INDEX OF SHEETS

SHEET NO.:	DESCRIPTION:
UO–1	TITLE SHEET
UO–02	UBO PLAN SHEETS

UTILITY OWNERS WITH CONFLICTS

(A) POWER – FOUR COUNTY ELECTRIC MEMBERSHIP CORP.

(B) TELEPHONE – STAR TELEPHONE MEMBERSHIP CORP.

PREPARED IN THE OFFICE OF:

Weston & Sampson
WSE of North Carolina, PC
598 East Chatham Street Suite 137
Phone: 919.297.0220
NC License: C-4647
Cary, NC 27511
Fax: 919.297.0221

JIM FORBES	UTILITY PROJECT MANAGER
D. VONDENHUEVEL	PROJECT UTILITY COORDINATOR
	PROJECT UTILITY TECHNICIAN

DIVISION OF HIGHWAYS
DIVISION 3
5501 BARBADO BLVD
CASTLE HAYNE, NC 28429
PHONE (910) 341–2001
FAX (910) 675–0143

	UTILITIES REGIONAL ENGINEER
LONNY A. SLEEPER	UTILITIES ENGINEER
ROY SUTTON	UTILITIES AREA COORDINATOR
	UTILITIES COORDINATOR

09/08/99
5/3/2022
P:\NC\Cary\OldServer\Engineer\UOBS\0696\026\2600 Sampson BR-297\Utilities\Coordination\Ubo\BP3R002_UO_TSH.dgn
10:02:06 AM

Weston & Sampson
WSE of North Carolina, PC
598 East Chatham Street Suite 137
Phone: 919.297.0220
NC License: C-4847
Cary, NC 27511
Fax: 919.297.0221

PROJECT REFERENCE NO.	SHEET NO.
BP.3.R002	UO-2
THIS SHEET CORRESPONDS TO RDY-04	

UTILITIES BY OTHERS

NOTE:
ALL PROPOSED UTILITY WORK SHOWN ON THIS SHEET WILL BE DONE BY OTHERS. NO PAYMENT WILL BE MADE TO THE CONTRACTOR FOR PROPOSED UTILITY WORK SHOWN ON THIS SHEET.

NO CONFLICTS

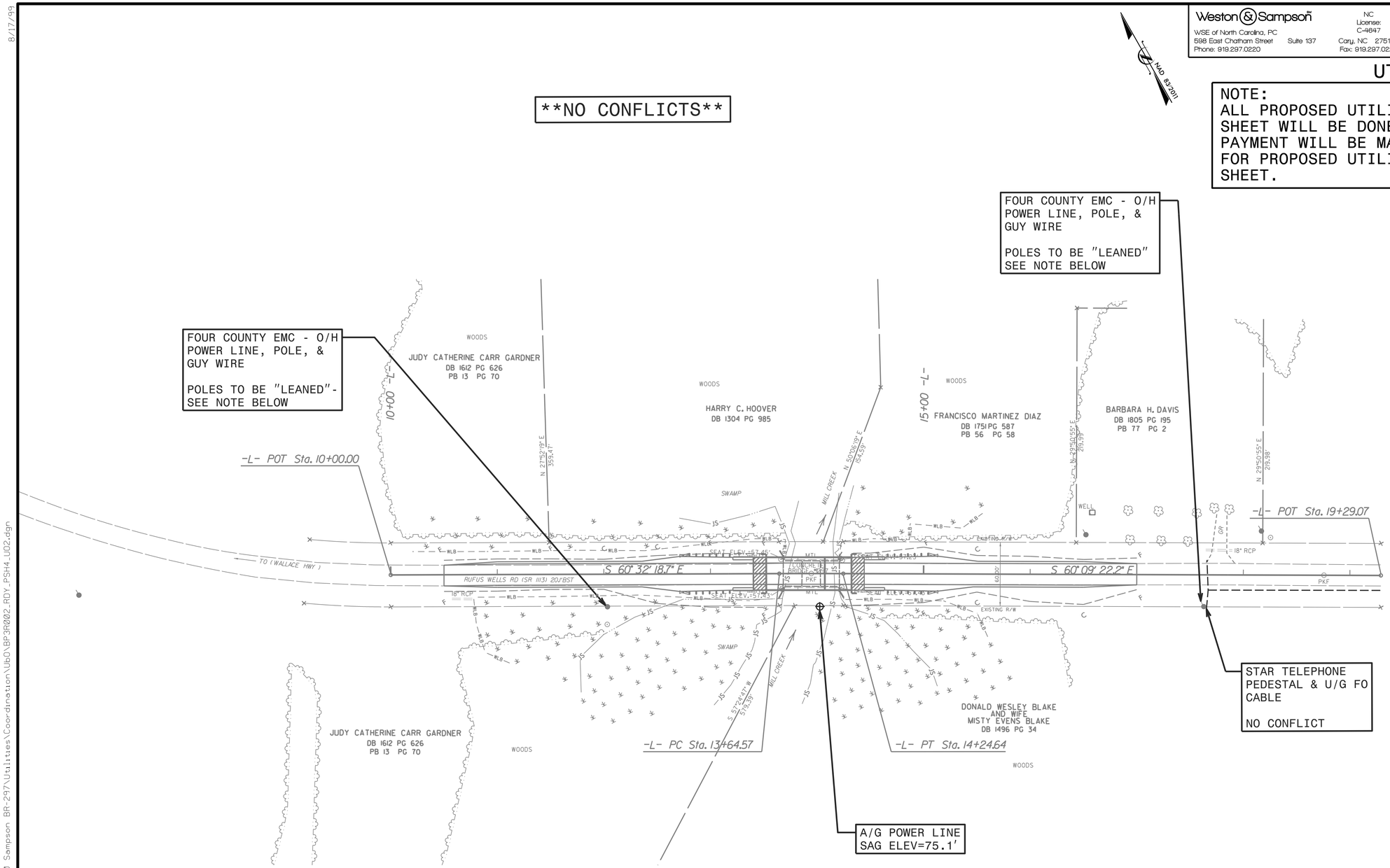

POWER - FOUR COUNTY EMC

COMMUNICATIONS - STAR TELEPHONE

NOTE: POLES WILL BE "LEANED" BY FOUR COUNTY EMC CONTRACTOR PRIOR TO CONSTRUCTION TO INCREASE SEPARATION TO APPROXIMATELY 35' OF CLEARANCE FROM CENTERLINE OF ROAD, IF NEEDED. CONTRACTOR TO GIVE 2 WEEKS NOTIFICATION TO FOUR COUNTY EMC PRIOR TO WORK STARTING ON BRIDGE.

8/17/99
5/3/2022
P:\NC_Cary\OldServer\Engineer\JOBS\0696\026\12600 Sampson BR-297\Utilities\Coordination\UbD\BP3R002_RDY_PSH4_UO2.dgn
10:31:35 AM

Note: Approximate quantities only. Unclassified Excavation, Fine Grading, Removal of Existing Asphalt Pavement, and Clearing and Grubbing, will be paid for at the contract lump sum price for "Grading."

NOTE: EMBANKMENT COLUMN INCLUDES BACKFILL FOR UNDERCUT

CROSS-SECTION SUMMARY

Station L	Uncl. Exc. (cu. yd.)	Embt (cu. yd.)
10+50.00	0	0
11+00.00	19	2
11+50.00	39	1
12+00.00	44	0
12+50.00	52	9
13+00.00	58	19
13+50.00	80	17
Station L	**Uncl. Exc. (cu. yd.)**	**Embt (cu. yd.)**
14+33.19	0	0
14+50.00	12	3
15+00.00	45	13
15+50.00	56	9
16+00.00	61	0
16+50.00	62	0
17+00.00	30	1

5/14/99

17-MAY-2022 14:38
adway\Corridor Modeling\BP3R002_RDY_X0.dgn
LNITB

0 2.5 5	PROJ. REFERENCE NO.	SHEET NO.
	BP3.R002	X-1

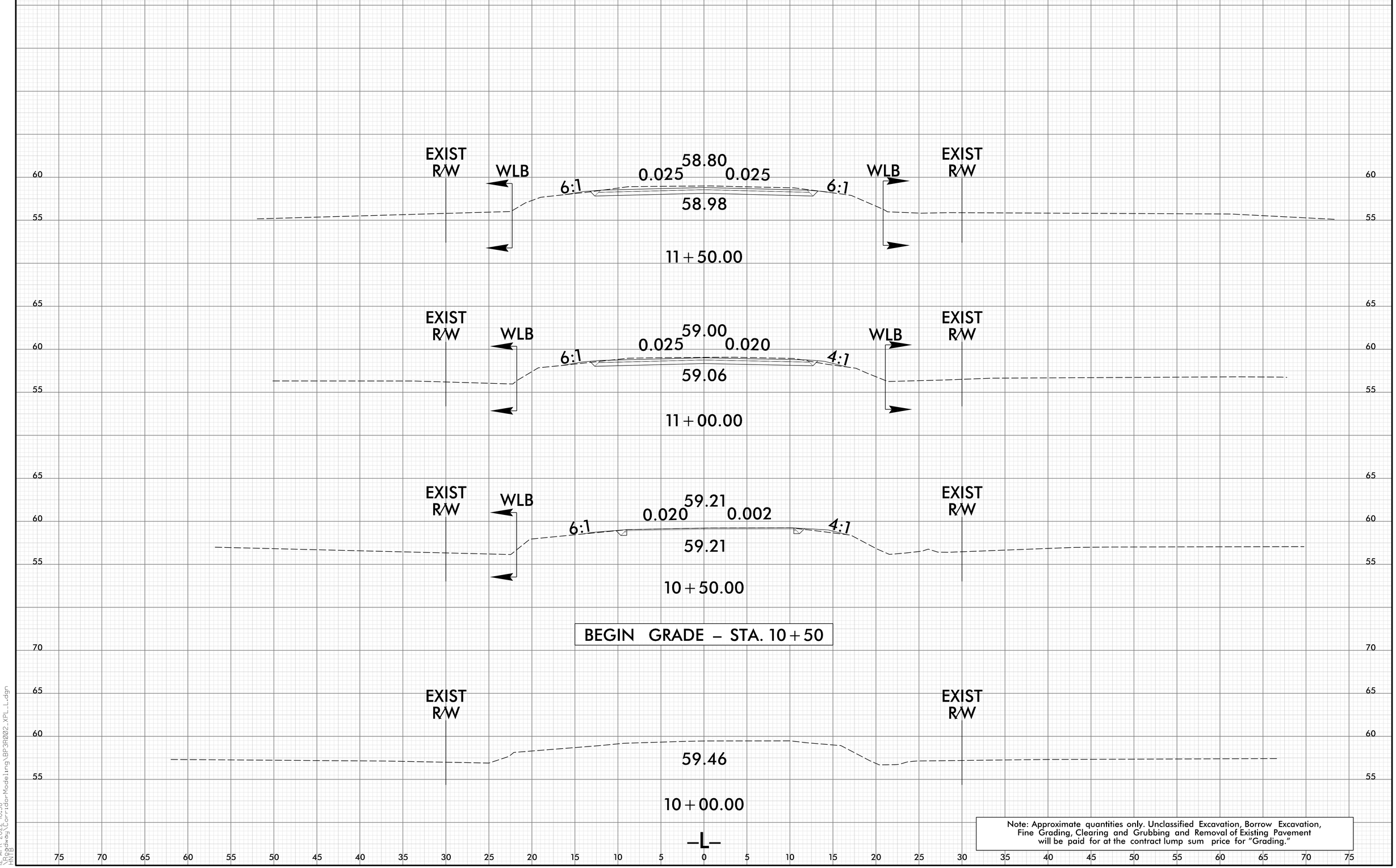

Note: Approximate quantities only. Unclassified Excavation, Borrow Excavation, Fine Grading, Clearing and Grubbing and Removal of Existing Pavement will be paid for at the contract lump sum price for "Grading."

8/23/99

12-APR-2022 10:38
\Roadway\Corridor-Modeling\BP3R002_XPL_L.dgn
HNB

PROJ. REFERENCE NO.	SHEET NO.
BP3.R002	X-2

0 2.5 5

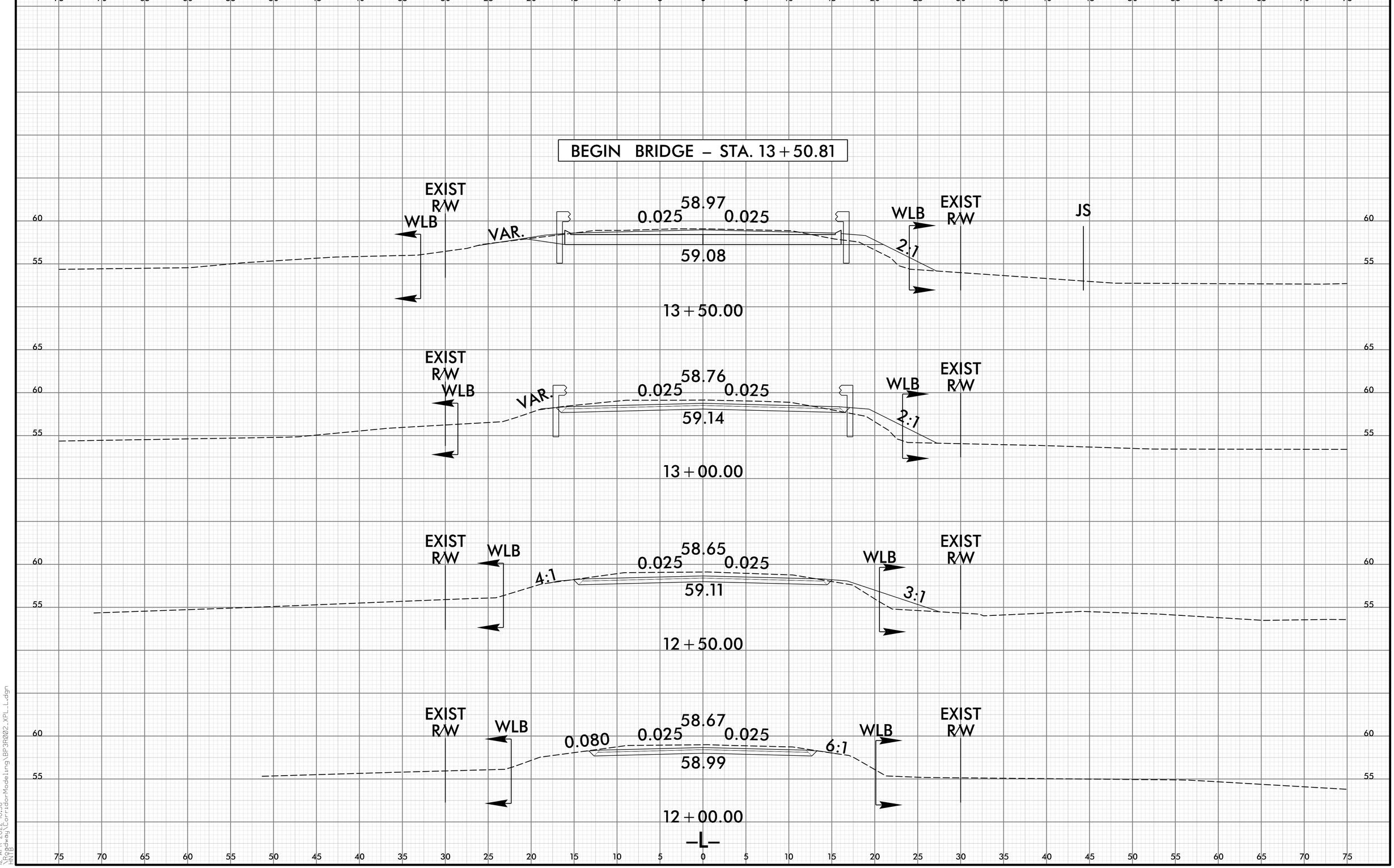

8/23/99

12-APR-2022 10:38
H:\Roadway\CorridorModeling\BP3R002_XPL_L.dgn
HNTB

0 2.5 5	PROJ. REFERENCE NO.	SHEET NO.
	BP3.R002	X-3

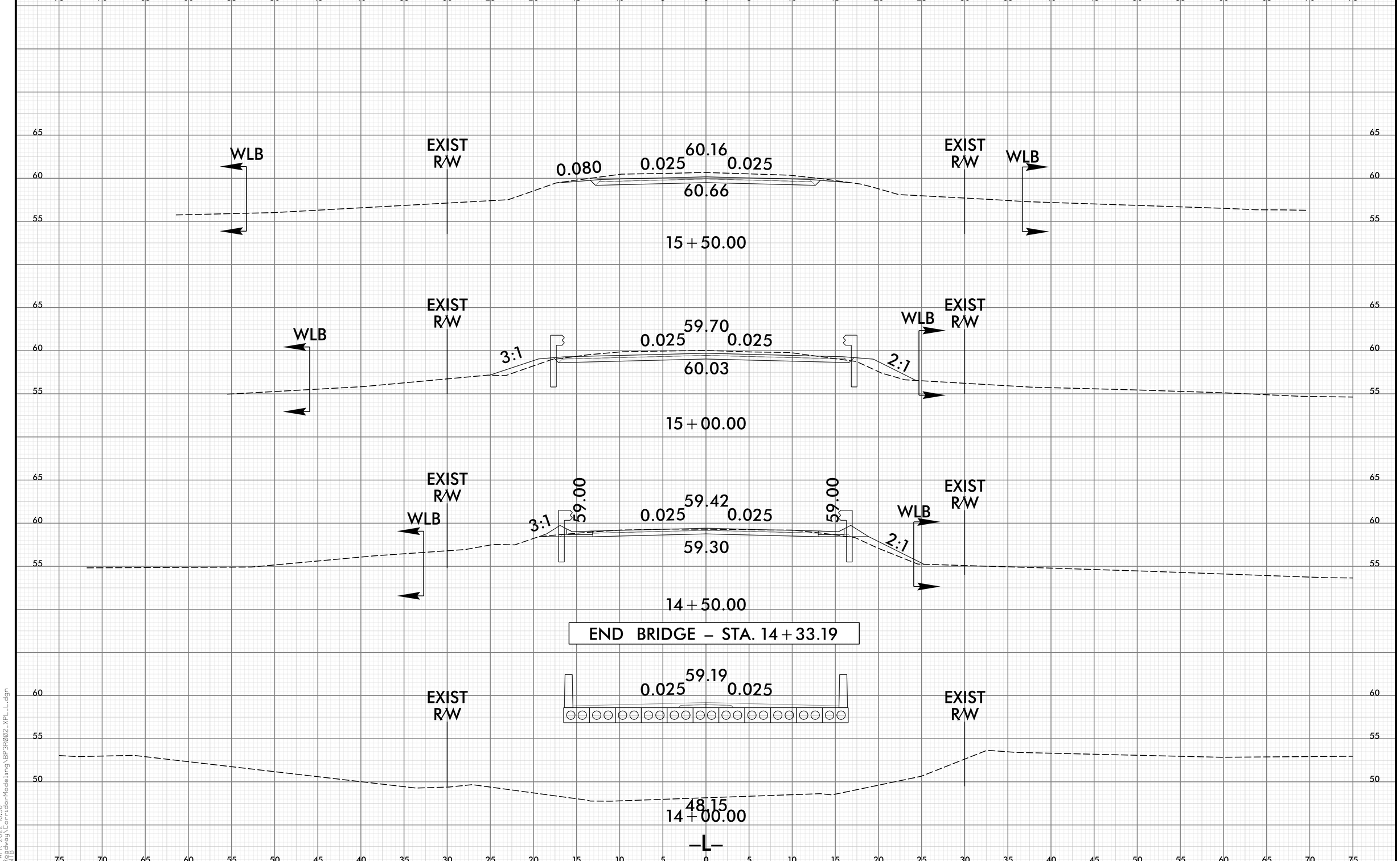

8/23/99
12-APR-2022 10:38
L:\Roadway Corridor Modeling\BP3R002_XPL_L.dgn
NATB

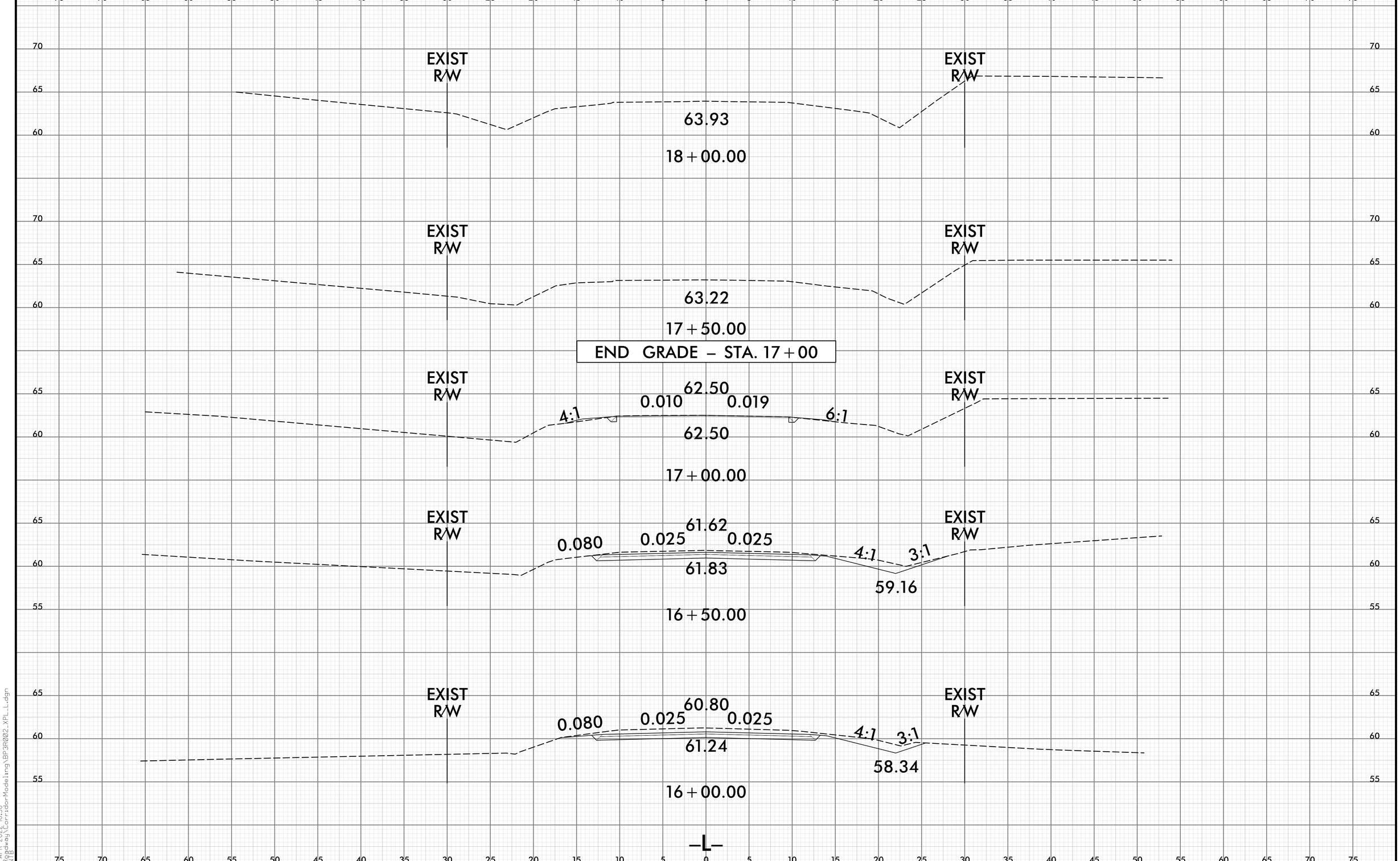

8/23/99
12-APR-2022 10:38
N:\Roadway\Corridor-Modeling\BP3R002_XPL_L.dgn
NATB

DocuSign Envelope ID: 3D5F064D-D375-4105-8AA2-B7474C92A929

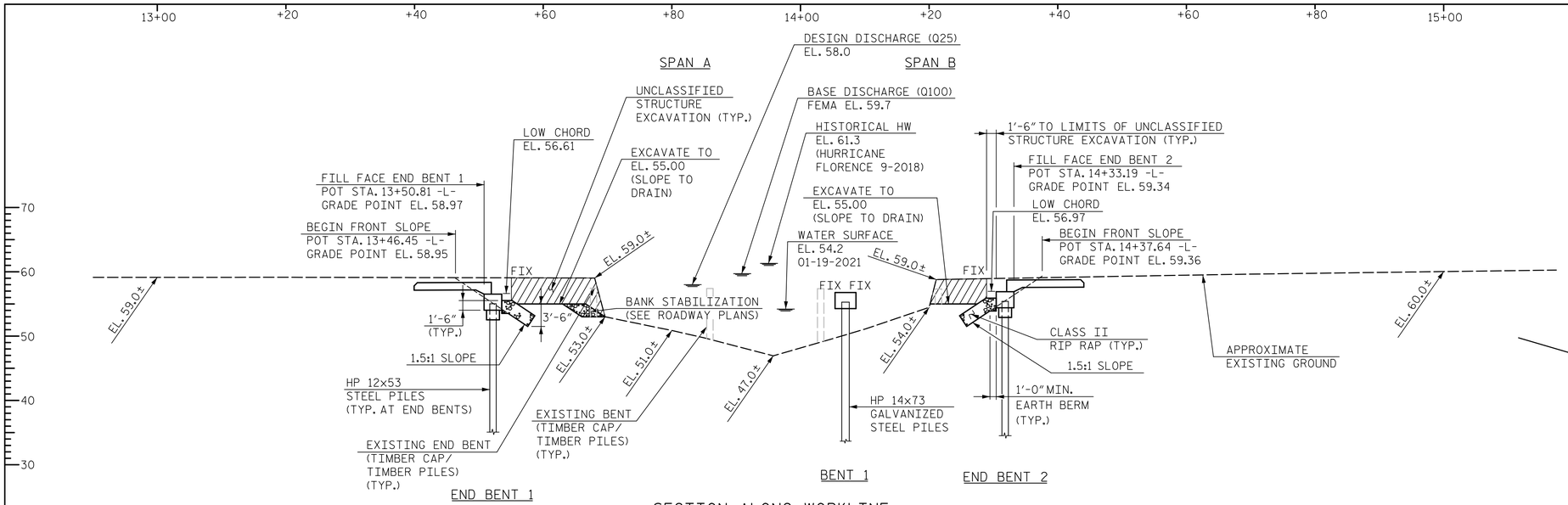

SECTION ALONG WORKLINE

BRIDGE HYDRAULIC DATA

DESIGN DISCHARGE	=	910 CFS
FREQUENCY OF DESIGN FLOOD	=	25 YR
DESIGN HIGH WATER ELEVATION	=	58.0 FT.
DRAINAGE AREA	=	8.64 SQ. MI.
BASE DISCHARGE (FEMA 100)	=	1,860 CFS
BASE HIGH WATER ELEVATION	=	59.7 FT.

OVERTOPPING FLOOD DATA

OVERTOPPING DISCHARGE	=	1,200 CFS
FREQUENCY OF OVERTOPPING FLOOD	=	50+ YR
OVERTOPPING FLOOD ELEVATION	=	58.7 FT.

NOTE: OVERTOPS AT SAG STA. 12+30.00 -L-
EL. 58.70

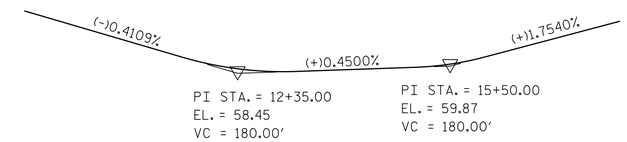

GRADE DATA -L-

HORIZONTAL CURVE DATA -L-

PI STA. 13+94.60
Δ = 0°-22'-56.6" (RT)
D = 0°-38'-11.8"
T = 30.03'
L = 60.06'
R = 9,000.00'

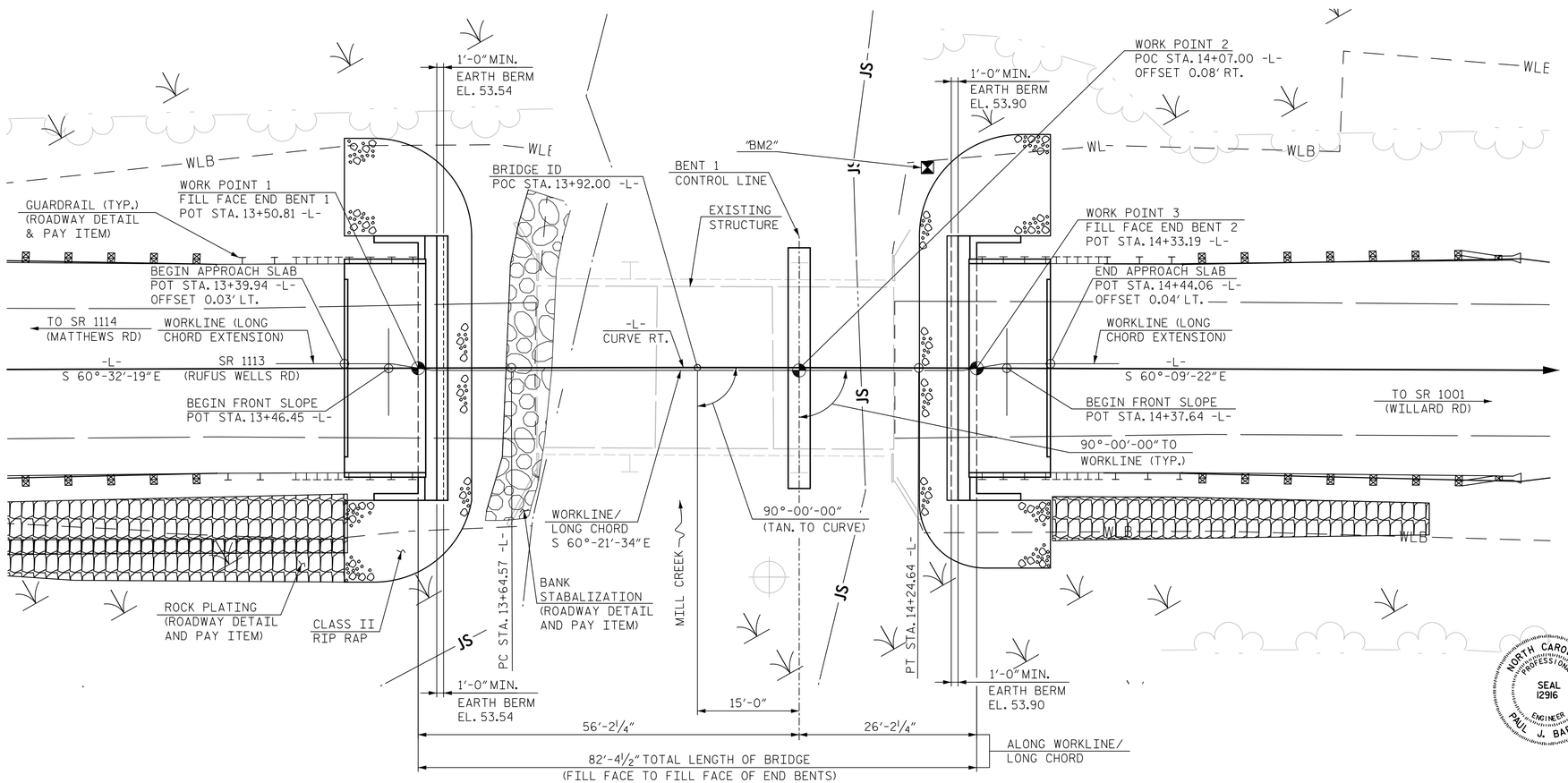

PLAN

PILES NOT SHOWN FOR CLARITY.

I HEREBY CERTIFY THESE PLANS
ARE THE AS-BUILT PLANS

PROJECT NO. BP3.R002

SAMPSON COUNTY

STATION: 13+92.00 -L-

SHEET 1 OF 2 REPLACES BRIDGE NO. 297

STATE OF NORTH CAROLINA
DEPARTMENT OF TRANSPORTATION
RALEIGH

GENERAL DRAWING FOR
BRIDGE ON SR 1113 OVER
MILL CREEK BETWEEN
SR 1114 AND SR 1001

NORTH CAROLINA PROFESSIONAL SEAL 12916 ENGINEER PAUL J. BARBER

DocuSigned by: Paul J. Barber
4/29/2022

DOCUMENT NOT CONSIDERED FINAL
UNLESS ALL SIGNATURES COMPLETED

HNTB NORTH CAROLINA, P.C.
NC License No. C-1554
343 E. Six Forks Rd., Suite 200, Raleigh, N.C. 27609

DRAWN BY M. WRIGHT B. ALSTON DATE 1/22
CHECKED BY P. BARBER DATE 2/22
DESIGN ENGINEER OF RECORD P. BARBER DATE 2/22

DWG. NO. 1

REVISIONS						SHEET NO.
NO.	BY	DATE	NO.	BY	DATE	S-1
1			3			TOTAL SHEETS
2			4			19

4/29/2022
11:12:31 AM
_MOT_001_BP3.R002_SMU_G001_001_B102SF.dgn

DocuSign Envelope ID: 76D68286-D4D7-474F-A694-43674B24CB3E

BM: "BM2" - RR SPIKE SET IN BASE OF 10" GUM, STA. 14+25.82 -L-, 29.56' LT., EL. 57.93

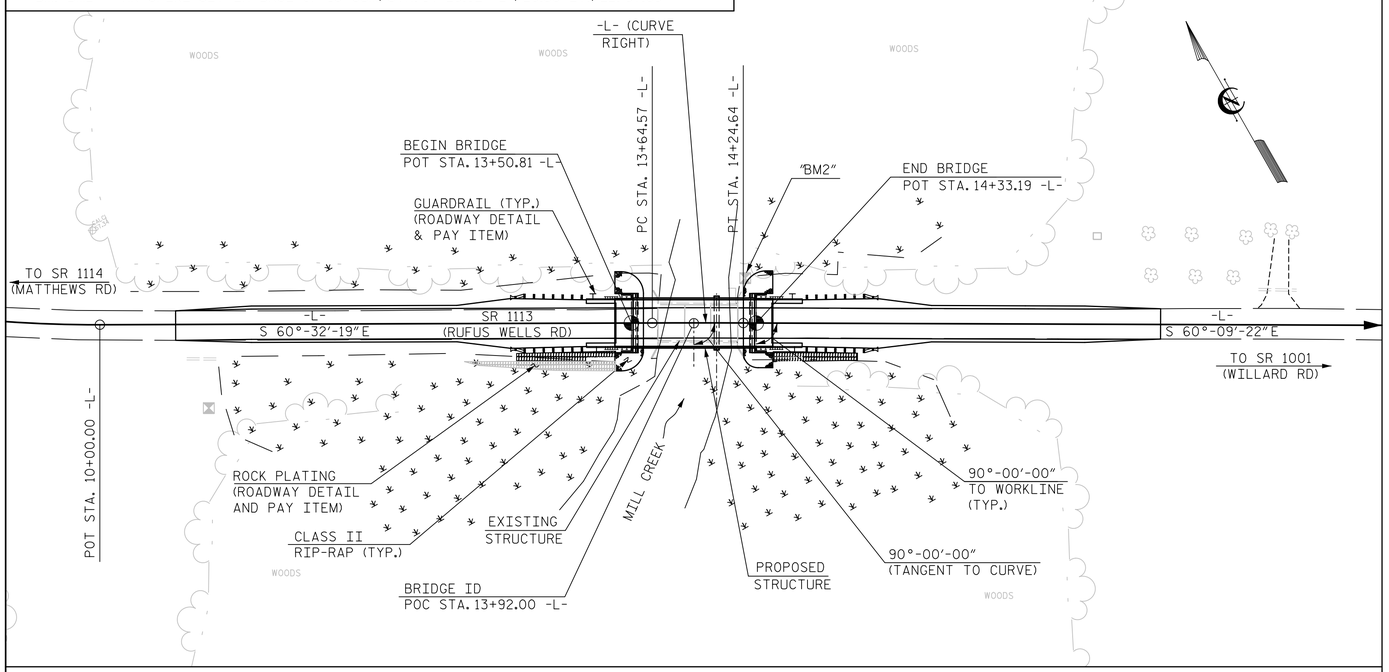

LOCATION SKETCH

FOR UTILITY INFORMATION, SEE UTILITY PLANS AND SPECIAL PROVISIONS.

FOUNDATION NOTES:

FOR PILES, SEE PILES PROVISION AND SECTION 450 OF THE STANDARD SPECIFICATIONS.

TOTAL BILL OF MATERIAL

	REMOVAL OF EXISTING STRUCTURE AT STATION 13+92.00 -L-	ASBESTOS ASSESSMENT	PDA TESTING	UNCLASSIFIED STRUCTURE EXCAVATION AT STATION 13+92.00 -L-	CLASS A CONCRETE	BRIDGE APPROACH SLABS AT STATION 13+92.00 -L-	REINFORCING STEEL	PILE DRIVING EQUIPMENT SETUP FOR HP 12x53 STEEL PILES	PILE DRIVING EQUIPMENT SETUP FOR HP 14x73 GALVANIZED STEEL PILES	HP 12x53 STEEL PILES		HP 14x73 GALVANIZED STEEL PILES		STEEL PILE POINTS	PILE REDRIVES	VERTICAL CONCRETE BARRIER RAIL	RIP RAP CLASS II (2'-0" THICK)	GEOTEXTILE FOR DRAINAGE	ELASTOMERIC BEARINGS	3'-0"x1'-9" PRESTRESSED CONCRETE CORED SLABS	
	LUMP SUM	LUMP SUM	EACH	LUMP SUM	CU. YDS.	LUMP SUM	LBS.	EACH	EACH	NO.	LIN. FT.	NO.	LIN. FT.	EACH	EACH	LIN. FT.	TONS	SQ. YDS.	LUMP SUM	NO.	LIN. FT.
SUPERSTRUCTURE	LUMP SUM	LUMP SUM	—	—	—	LUMP SUM	—	—	—	—	—	—	—	—	—	160.50	—	—	LUMP SUM	22	880
END BENT 1	—	—		LUMP SUM	14.2	—	2,106	7	—	7	385	—	—	7		—	65	70	—	—	—
BENT 1	—	—	1	—	10.7	—	2,118	—	8	—	—	8	480	8	11	—	—	—	—	—	—
END BENT 2	—	—		LUMP SUM	14.2	—	2,106	7	—	7	315	—	—	7		—	70	80	—	—	—
TOTAL	LUMP SUM	LUMP SUM	1	LUMP SUM	39.1	LUMP SUM	6,330	14	8	14	700	8	480	22	11	160.50	135	150	LUMP SUM	22	880

GENERAL NOTES

ASSUMED LIVE LOAD = HL-93 OR ALTERNATE LOADING.

THIS BRIDGE HAS BEEN DESIGNED IN ACCORDANCE WITH THE AASHTO LRFD BRIDGE DESIGN SPECIFICATIONS.

THIS BRIDGE IS LOCATED IN SEISMIC ZONE 1.

THIS BRIDGE SHALL BE CONSTRUCTED USING TOP-DOWN CONSTRUCTION METHODS. THE USE OF A TEMPORARY CAUSEWAY OR WORK BRIDGE IS NOT PERMITTED. CONTRACTOR SHALL NOT PLACE A CRANE ON SPAN A.

FOR OTHER DESIGN DATA AND GENERAL NOTES, SEE SHEET SN.

FOR SUBMITTAL OF WORKING DRAWINGS, SEE SPECIAL PROVISIONS.

FOR FALSEWORK AND FORMWORK, SEE SPECIAL PROVISIONS.

FOR CRANE SAFETY, SEE SPECIAL PROVISIONS.

FOR GROUT FOR STRUCTURES, SEE SPECIAL PROVISIONS.

INASMUCH AS THE PAINT SYSTEM ON THE EXISTING STRUCTURAL STEEL CONTAINS LEAD, THE CONTRACTOR'S ATTENTION IS DIRECTED TO ARTICLE 107-1 OF THE STANDARD SPECIFICATIONS. ANY COSTS RESULTING FROM COMPLIANCE WITH APPLICABLE STATE OR FEDERAL REGULATIONS PERTAINING TO HANDLING OF MATERIALS CONTAINING LEAD BASED PAINT SHALL BE INCLUDED IN THE BID PRICE FOR "REMOVAL OF EXISTING STRUCTURE AT STATION 13+92.00 -L-.

THE MATERIAL SHOWN IN THE CROSS-HATCHED AREA SHALL BE EXCAVATED FOR A DISTANCE OF 19.5 FT. ON EACH SIDE OF CENTERLINE BRIDGE AS DIRECTED BY THE ENGINEER. THIS WORK WILL BE PAID FOR AT THE CONTRACT LUMP SUM PRICE FOR UNCLASSIFIED STRUCTURE EXCAVATION. SEE SECTION 412 OF THE STANDARD SPECIFICATIONS.

THE EXISTING STRUCTURE CONSISTING OF 1 SPAN @ 17'-10", 1 SPAN @ 16'-11", AND 1 SPAN @ 17'-11" WITH A 24'-0" CLEAR ROADWAY WITH REINFORCED CONCRETE (RC) DECK ON 19 LINES OF 6x12 TIMBER JOISTS WITH A 25'-4" OUT TO OUT DECK WIDTH ON TIMBER CAPS ON TIMBER PILES SHALL BE REMOVED. THE EXISTING BRIDGE IS PRESENTLY POSTED FOR LOAD LIMIT. IN ADDITION, ANY PILES REMAINING FROM PREVIOUS BRIDGE CONSTRUCTION OR MAINTENANCE OPERATIONS SHALL BE REMOVED AND INCLUDED IN THE LUMP SUM PAY ITEM FOR "REMOVAL OF EXISTING STRUCTURE AT STATION 13+92.00 -L-"

THE SUBSTRUCTURE OF THE EXISTING BRIDGE INDICATED ON THE PLANS IS FROM THE BEST INFORMATION AVAILABLE. THIS INFORMATION IS SHOWN FOR THE CONVENIENCE OF THE CONTRACTOR, THE CONTRACTOR SHALL HAVE NO CLAIM WHATSOEVER AGAINST THE DEPARTMENT OF TRANSPORTATION FOR ANY DELAYS OR ADDITIONAL COST INCURRED BASED ON DIFFERENCES BETWEEN THE EXISTING BRIDGE SUBSTRUCTURE SHOWN ON THE PLANS AND THE ACTUAL CONDITIONS AT THE PROJECT SITE.

REMOVAL OF THE EXISTING BRIDGE SHALL BE PERFORMED IN A MANNER THAT PREVENTS DEBRIS FROM FALLING INTO THE WATER. THE CONTRACTOR SHALL SUBMIT DEMOLITION PLANS FOR REVIEW AND REMOVE THE BRIDGE IN ACCORDANCE WITH ARTICLE 402-2 OF THE STANDARD SPECIFICATIONS.

THIS STRUCTURE HAS BEEN DESIGNED IN ACCORDANCE WITH "HEC 18 - EVALUATING SCOUR AT BRIDGES."

THE SCOUR CRITICAL ELEVATION FOR BENT NO. 1 IS ELEVATION 37.00 FT. SCOUR CRITICAL ELEVATIONS ARE USED TO MONITOR POSSIBLE SCOUR PROBLEMS DURING THE LIFE OF THE STRUCTURE.

FOR INTERIOR BENT NO. 1 PARTIAL GALVANIZING OF THE PILES IS REQUIRED. SEE INTERIOR BENT SHEETS FOR REQUIRED GALVANIZED LENGTH. PAYMENT FOR PARTIALLY GALVANIZED PILES WILL BE MADE UNDER THE CONTRACT UNIT PRICE FOR GALVANIZED STEEL PILES.

FOR EROSION CONTROL MEASURES SEE EROSION CONTROL PLANS.

ASPHALT WEARING SURFACE IS INCLUDED IN ROADWAY QUANTITY ON ROADWAY PLANS.

FOR ASBESTOS ASSESSMENT FOR BRIDGE DEMOLITION AND RENOVATION ACTIVITIES, SEE SPECIAL PROVISIONS.

NORTH CAROLINA PROFESSIONAL SEAL 12916 ENGINEER PAUL J. BARBER

DocuSigned by: Paul J. Barber
DBF1B573687414E...
5/12/2022

DOCUMENT NOT CONSIDERED FINAL UNLESS ALL SIGNATURES COMPLETED

HNTB NORTH CAROLINA, P.C.
NC License No. C-1554
343 E. Six Forks Rd., Suite 200, Raleigh, N.C. 27609

DRAWN BY M. WRIGHT B. ALSTON DATE 5/22
CHECKED BY P. BARBER DATE 5/22
DESIGN ENGINEER OF RECORD P. BARBER DATE 5/22

DWG. NO. 2

PROJECT NO. BP3.R002
SAMPSON COUNTY
STATION: 13+92.00 -L-

SHEET 2 OF 2

STATE OF NORTH CAROLINA
DEPARTMENT OF TRANSPORTATION
RALEIGH

GENERAL DRAWING FOR
BRIDGE ON SR 1113 OVER
MILL CREEK BETWEEN
SR 1114 AND SR 1001

REVISIONS						SHEET NO.
NO.	BY	DATE	NO.	BY	DATE	S-2
1			3			TOTAL SHEETS
2			4			19

5/12/2022
3:12:29 PM
...\401_003_BP3.R002_SMU_GDOZ_002_B10257.dgn

DocuSign Envelope ID: 3D5F064D-D375-4105-8AA2-B7474C92A929

SUMMARY OF PILE INFORMATION/INSTALLATION

(Blank entries indicate item is not applicable to structure)

End Bent/ Bent No, Pile(s) #-# (e.g., "Bent 1, Piles 1-5")	Factored Resistance per Pile TONS	Pile Cut-Off (Top of Pile) Elevation FT	Estimated Pile Lenth per Pile FT	Scour Critical Elevation FT	Driven Piles			Predrilling for Piles*			Drilled-In Piles		
					Min Pile Tip (Tip No Higher Than) Elev FT	Required Driving Resistance (RDR)** per Pile TONS	Total Pile Redrives Quantity EACH	Predrilling Length per Pile Lin FT	Predrilling Elevation (Elev Not To Predrill Below) FT	Maximum Predrilling Dia INCHES	Pile Excavation (Bottom of Hole) Elev FT	Pile Exc Not In Soil per Pile Lin FT	Pile Exc In Soil per Pile Lin FT
End Bent 1, Piles 1-7	71	55.04	55			120							
Bent 1, Piles 1-8	88	55.27	60	37	19.0	155	11						
End Bent 2, Piles 1-7	46	55.40	45			80							

*Predrilling for Piles is required for end bents/bents with a predrilling length and at the Contractor's option for end bents/bents with predrilling information but no predrilling length.

$$^{**}RDR = \frac{Factored\ Resistance + Factored\ Downdrag\ Load + Factored\ Dead\ Load}{Dynamic\ Resistance\ Factor} + Nominal\ Downdrag\ Resistance + \frac{Nominal\ Scour\ Resistance}{Scour\ Resistance\ Factor}$$

SUMMARY OF PDA/PILE ORDER LENGTHS

(Blank entries indicate item is not applicable to structure)

Pile Driving Analyzer (PDA)				Pile Order Lengths	
End Bent/ Bent No	PDA Testing Required? YES or MAYBE	PDA Test Pile Length FT	Total PDA Testing Quantity EACH	End Bent/ Bent No(s)	Pile Order Length Basis* EST or PDA
End Bent 1, Piles 1-7	MAYBE	60			
Bent 1, Piles 1-8	MAYBE	65	1		
End Bent 2, Piles 1-7	MAYBE	50			

*EST = Pile order lengths from estimated pile lengths; PDA = Pile order lengths based on PDA testing. For groups of end bents/bents with pile order lengths based on PDA testing, the first end bent/bent no. listed for each group is the representative end bent/bent with the PDA.

PILE DESIGN INFORMATION

(Blank entries indicate item is not applicable to structure)

End Bent/ Bent No, Pile(s) #-# (e.g., "Bent 1, Piles 1-5")	Factored Axial Load per Pile TONS	Factored Downdrag Load per Pile TONS	Factored Dead Load* per Pile TONS	Dynamic Resistance Factor	Nominal Downdrag Resistance per Pile TONS	Nominal Scour Resistance per Pile TONS	Scour Resistance Factor (Default = 1.00)
End Bent 1, Piles 1-7	71			0.60			
Bent 1, Piles 1-8	88			0.60		8.0	1.00
End Bent 2, Piles 1-7	46			0.60			

*Factored Dead Load is factored weight of pile above the ground line.

SUMMARY OF PILE ACCESSORIES

(Blank entries indicate item is not applicable to structure)

End Bent/ Bent No, Pile(s) #-# (e.g., "Bent 1, Piles 1-5")	Pipe Pile Plates Required? YES or MAYBE	Steel Pile Points			Steel Pile Tips Required? YES
		Pipe Pile Cutting Shoes Required? YES	Pipe Pile Conical Points Required? YES	H-Pile Points Required? YES	
End Bent 1, Piles 1-7				YES	
Bent 1, Piles 1-8				YES	
End Bent 2, Piles 1-7				YES	
TOTAL QTY:				22	

PROJECT NO. BP3.R002.1 (SF-810297)

SAMPSON COUNTY

STATION: 13+92.00 -L-

NOTES:

1. The Pile Foundation Tables are based on the bridge substructure design and foundation recommendations sealed by a North Carolina Professional Engineer (Jinyoung Park, PE# 032171) on 2-16-2022.
2. Total Pile Driving Equipment Setup quantity (not shown in Pile Foundation Tables) equals the number of driven piles, i.e., the number of piles with a Required Driving Resistance.
3. The Engineer will determine the need for PDA Testing when PDAs may be required.

NORTH CAROLINA PROFESSIONAL SEAL 12916 ENGINEER PAUL J. BARBER

Paul J. Barber

18DF1B573687416...

SIGNATURE DATE 4/29/2022

DOCUMENT NOT CONSIDERED FINAL UNLESS ALL SIGNATURES COMPLETED

STATE OF NORTH CAROLINA
DEPARTMENT OF TRANSPORTATION
RALEIGH

PILE FOUNDATION TABLES

REVISIONS						
NO.	BY:	DATE:	NO.	BY:	DATE:	
1			3			
2			4			

SHEET NO. S-3

TOTAL SHEETS 19

DocuSign Envelope ID: 3D5F064D-D375-4105-8AA2-B7474C92A929

LOAD AND RESISTANCE FACTOR RATING (LRFD) SUMMARY FOR PRESTRESSED CONCRETE GIRDERS

LEVEL		VEHICLE	WEIGHT (W) (TONS)	CONTROLLING LOAD RATING	MINIMUM RATING FACTORS (RF)	TONS = W X RF	STRENGTH I LIMIT STATE											SERVICE III LIMIT STATE						COMMENT NUMBER
								MOMENT					SHEAR						MOMENT					
							LIVELOAD FACTORS	DISTRIBUTION FACTORS (DF)	RATING FACTOR	SPAN	GIRDER LOCATION	DISTANCE FROM LEFT END OF SPAN (ft)	DISTRIBUTION FACTORS (DF)	RATING FACTOR	SPAN	GIRDER LOCATION	DISTANCE FROM LEFT END OF SPAN (ft)	LIVELOAD FACTORS	DISTRIBUTION FACTORS (DF)	RATING FACTOR	SPAN	GIRDER LOCATION	DISTANCE FROM LEFT END OF SPAN (ft)	
DESIGN LOAD RATING		HL-93(Inv)	N/A	1	1.055	--	1.75	0.275	1.23	55'	EL	27	0.523	1.23	55'	EL	5.4	0.80	0.275	1.05	55'	EL	27	
		HL-93(Opr)	N/A	--	1.591	--	1.35	0.275	1.59	55'	EL	27	0.523	1.59	55'	EL	5.4	N/A	--	--	--	--	--	
		HS-20(Inv)	36.000	2	1.322	47.585	1.75	0.275	1.54	55'	EL	27	0.523	1.47	55'	EL	5.4	0.80	0.275	1.32	55'	EL	27	
		HS-20(Opr)	36.000	--	1.9	68.396	1.35	0.275	1.99	55'	EL	27	0.523	1.9	55'	EL	5.4	N/A	--	--	--	--	--	
LEGAL LOAD RATING	SV	SNSH	13.500	--	2.776	37.476	1.4	0.275	4.04	55'	EL	27	0.523	4.17	55'	EL	5.4	0.80	0.275	2.78	55'	EL	27	
		SNGARBS2	20.000	--	2.155	43.095	1.4	0.275	3.14	55'	EL	27	0.523	3.02	55'	EL	5.4	0.80	0.275	2.15	55'	EL	27	
		SNAGRIS2	22.000	--	2.079	45.734	1.4	0.275	3.03	55'	EL	27	0.523	2.83	55'	EL	5.4	0.80	0.275	2.08	55'	EL	27	
		SNCOTTS3	27.250	--	1.384	37.708	1.4	0.275	2.01	55'	EL	27	0.523	2.09	55'	EL	5.4	0.80	0.275	1.38	55'	EL	27	
		SNAGGRS4	34.925	--	1.189	41.527	1.4	0.275	1.73	55'	EL	27	0.523	1.77	55'	EL	5.4	0.80	0.275	1.19	55'	EL	27	
		SNS5A	35.550	--	1.16	41.255	1.4	0.275	1.69	55'	EL	27	0.523	1.82	55'	EL	5.4	0.80	0.275	1.16	55'	EL	27	
		SNS6A	39.950	--	1.079	43.102	1.4	0.275	1.57	55'	EL	27	0.523	1.68	55'	EL	5.4	0.80	0.275	1.08	55'	EL	27	
		SNS7B	42.000	--	1.028	43.175	1.4	0.275	1.5	55'	EL	27	0.523	1.67	55'	EL	5.4	0.80	0.275	1.03	55'	EL	27	
	TTST	TNAGRIT3	33.000	--	1.32	43.556	1.4	0.275	1.92	55'	EL	27	0.523	1.98	55'	EL	5.4	0.80	0.275	1.32	55'	EL	27	
		TNT4A	33.075	--	1.33	43.979	1.4	0.275	1.94	55'	EL	27	0.523	1.91	55'	EL	5.4	0.80	0.275	1.33	55'	EL	27	
		TNT6A	41.600	--	1.101	45.811	1.4	0.275	1.6	55'	EL	27	0.523	1.83	55'	EL	5.4	0.80	0.275	1.10	55'	EL	27	
		TNT7A	42.000	--	1.114	46.804	1.4	0.275	1.62	55'	EL	27	0.523	1.71	55'	EL	5.4	0.80	0.275	1.11	55'	EL	27	
		TNT7B	42.000	--	1.163	48.848	1.4	0.275	1.69	55'	EL	27	0.523	1.62	55'	EL	5.4	0.80	0.275	1.16	55'	EL	27	
		TNAGRIT4	43.000	--	1.101	47.33	1.4	0.275	1.6	55'	EL	27	0.523	1.56	55'	EL	5.4	0.80	0.275	1.10	55'	EL	27	
		TNAGT5A	45.000	--	1.031	46.405	1.4	0.275	1.5	55'	EL	27	0.523	1.58	55'	EL	5.4	0.80	0.275	1.03	55'	EL	27	
		TNAGT5B	45.000	3	1.013	45.582	1.4	0.275	1.47	55'	EL	27	0.523	1.48	55'	EL	5.4	0.80	0.275	1.01	55'	EL	27	

LOAD FACTORS:

DESIGN LOAD RATING FACTORS	LIMIT STATE	γ_{DC}	γ_{DW}
	STRENGTH I	1.25	1.50
	SERVICE III	1.00	1.00

NOTES:

MINIMUM RATING FACTORS ARE BASED ON THE STRENGTH I AND SERVICE III LIMIT STATES.

ALLOWABLE STRESSES FOR SERVICE III LIMIT STATE ARE AS REQUIRED FOR DESIGN.

COMMENTS:

1.
2.
3.
4.

(#) CONTROLLING LOAD RATING

(1) DESIGN LOAD RATING (HL-93)
(2) DESIGN LOAD RATING (HS-20)
(3) LEGAL LOAD RATING **
** SEE CHART FOR VEHICLE TYPE

GIRDER LOCATION

I - INTERIOR GIRDER
EL - EXTERIOR LEFT GIRDER
ER - EXTERIOR RIGHT GIRDER

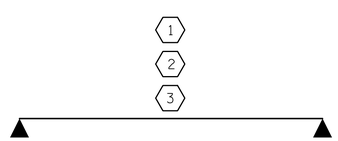

LRFR SUMMARY

FOR SPAN 'A'

PROJECT NO. BP3.R002

SAMPSON COUNTY

STATION: 13+92.00 -L-

NORTH CAROLINA PROFESSIONAL SEAL 12916 ENGINEER PAUL J. BARBER

DocuSigned by: Paul J. Barber 18DE9B573687416... 4/29/2022

STATE OF NORTH CAROLINA
DEPARTMENT OF TRANSPORTATION
RALEIGH

STANDARD

LRFR SUMMARY FOR 55' CORED SLAB UNIT 90° SKEW (NON-INTERSTATE TRAFFIC)

REVISIONS						SHEET NO.
NO.	BY	DATE	NO.	BY	DATE	S-4
1			3			TOTAL SHEETS
2			4			19

HNTB NORTH CAROLINA, P.C.
NC License No. C-1554
343 E. Six Forks Rd., Suite 200, Raleigh, N.C. 27609

DRAWN BY B. ALSTON DATE 1/22
CHECKED BY P. BARBER DATE 1/22
DESIGN ENGINEER OF RECORD P. BARBER DATE 2/22

DWG. NO. 4

ASSEMBLED BY : BJA DATE : 1/22
CHECKED BY : PJB DATE : 1/22

DRAWN BY : CVC 6/10
CHECKED BY : DNS 6/10

DOCUMENT NOT CONSIDERED FINAL UNLESS ALL SIGNATURES COMPLETED

4/29/2022 11:10:47 AM
_MOT_DOT_BP3.R002_SMU_SD04_SD04_B10257.dgn

STD. NO. 21LRFR1_90S_55L

DocuSign Envelope ID: 3D5F064D-D375-4105-8AA2-B7474C92A929

LOAD AND RESISTANCE FACTOR RATING (LRFD) SUMMARY FOR PRESTRESSED CONCRETE GIRDERS

LEVEL		VEHICLE	WEIGHT (W) (TONS)	CONTROLLING LOAD RATING	MINIMUM RATING FACTORS (RF)	TONS = W X RF	STRENGTH I LIMIT STATE											SERVICE III LIMIT STATE						COMMENT NUMBER
								MOMENT					SHEAR						MOMENT					
							LIVELOAD FACTORS	DISTRIBUTION FACTORS (DF)	RATING FACTOR	SPAN	GIRDER LOCATION	DISTANCE FROM LEFT END OF SPAN (ft)	DISTRIBUTION FACTORS (DF)	RATING FACTOR	SPAN	GIRDER LOCATION	DISTANCE FROM LEFT END OF SPAN (ft)	LIVELOAD FACTORS	DISTRIBUTION FACTORS (DF)	RATING FACTOR	SPAN	GIRDER LOCATION	DISTANCE FROM LEFT END OF SPAN (ft)	
DESIGN LOAD RATING		HL-93(Inv)	N/A	1	1.018	--	1.75	0.284	2.53	25'	EL	12	0.591	1.02	25'	EL	1.2	0.80	0.284	2.34	25'	EL	12	
		HL-93(Opr)	N/A	--	1.319	--	1.35	0.284	3.29	25'	EL	12	0.591	1.32	25'	EL	1.2	N/A	--	--	--	--	--	
		HS-20(Inv)	36.000	2	1.178	42.397	1.75	0.284	3.76	25'	EL	12	0.591	1.18	25'	EL	1.2	0.80	0.284	3.46	25'	EL	12	
		HS-20(Opr)	36.000	--	1.527	54.959	1.35	0.284	4.87	25'	EL	12	0.591	1.53	25'	EL	1.2	N/A	--	--	--	--	--	
LEGAL LOAD RATING	SV	SNSH	13.500	--	2.728	36.833	1.4	0.284	6.83	25'	EL	12	0.591	2.73	25'	EL	1.2	0.80	0.284	5.04	25'	EL	12	
		SNGARBS2	20.000	--	2.186	43.718	1.4	0.284	6.39	25'	EL	12	0.591	2.19	25'	EL	1.2	0.80	0.284	4.72	25'	EL	12	
		SNAGRIS2	22.000	--	2.141	47.107	1.4	0.284	6.83	25'	EL	12	0.591	2.14	25'	EL	1.2	0.80	0.284	5.04	25'	EL	12	
		SNCOTTS3	27.250	--	1.385	37.731	1.4	0.284	3.57	25'	EL	12	0.591	1.38	25'	EL	1.2	0.80	0.284	2.64	25'	EL	12	
		SNAGGRS4	34.925	--	1.332	46.511	1.4	0.284	3.56	25'	EL	12	0.591	1.33	25'	EL	1.2	0.80	0.284	2.62	25'	EL	12	
		SNS5A	35.550	--	1.392	49.477	1.4	0.284	3.45	25'	EL	12	0.591	1.39	25'	EL	1.2	0.80	0.284	2.54	25'	EL	12	
		SNS6A	39.950	--	1.334	53.31	1.4	0.284	3.23	25'	EL	12	0.591	1.33	25'	EL	1.2	0.80	0.284	2.39	25'	EL	12	
		SNS7B	42.000	--	1.344	56.455	1.4	0.284	3.23	25'	EL	12	0.591	1.34	25'	EL	1.2	0.80	0.284	2.37	25'	EL	12	
	TTST	TNAGRIT3	33.000	--	1.634	53.934	1.4	0.284	4.55	25'	EL	12	0.591	1.63	25'	EL	1.2	0.80	0.284	3.36	25'	EL	12	
		TNT4A	33.075	--	1.483	49.049	1.4	0.284	3.95	25'	EL	12	0.591	1.48	25'	EL	1.2	0.80	0.284	2.92	25'	EL	12	
		TNT6A	41.600	--	1.398	58.138	1.4	0.284	3.71	25'	EL	12	0.591	1.4	25'	EL	1.2	0.80	0.284	2.74	25'	EL	12	
		TNT7A	42.000	--	1.391	58.419	1.4	0.284	3.84	25'	EL	12	0.591	1.39	25'	EL	1.2	0.80	0.284	2.83	25'	EL	12	
		TNT7B	42.000	--	1.343	56.385	1.4	0.284	3.46	25'	EL	12	0.591	1.34	25'	EL	1.2	0.80	0.284	2.55	25'	EL	12	
		TNAGRIT4	43.000	--	1.340	57.604	1.4	0.284	3.71	25'	EL	12	0.591	1.34	25'	EL	1.2	0.80	0.284	2.73	25'	EL	12	
		TNAGT5A	45.000	--	1.367	61.501	1.4	0.284	3.71	25'	EL	12	0.591	1.37	25'	EL	1.2	0.80	0.284	2.73	25'	EL	12	
		TNAGT5B	45.000	3	1.239	55.766	1.4	0.284	3.65	25'	EL	9.6	0.591	1.24	25'	EL	1.2	0.80	0.284	2.71	25'	EL	9.6	

LOAD FACTORS:

	LIMIT STATE	γ_{DC}	γ_{DW}
DESIGN LOAD RATING FACTORS	STRENGTH I	1.25	1.50
	SERVICE III	1.00	1.00

NOTES:

MINIMUM RATING FACTORS ARE BASED ON THE STRENGTH I AND SERVICE III LIMIT STATES.

ALLOWABLE STRESSES FOR SERVICE III LIMIT STATE ARE AS REQUIRED FOR DESIGN.

COMMENTS:

1.
2.
3.
4.

(#) CONTROLLING LOAD RATING

(1) DESIGN LOAD RATING (HL-93)
(2) DESIGN LOAD RATING (HS-20)
(3) LEGAL LOAD RATING **

** SEE CHART FOR VEHICLE TYPE

GIRDER LOCATION

I - INTERIOR GIRDER
EL - EXTERIOR LEFT GIRDER
ER - EXTERIOR RIGHT GIRDER

LRFR SUMMARY

FOR SPAN 'B'

PROJECT NO. BP3.R002
SAMPSON COUNTY
STATION: 13+92.00 -L-

NORTH CAROLINA PROFESSIONAL SEAL 12916 ENGINEER PAUL J. BARBER
DocuSigned by: Paul J. Barber
4/29/2022

STATE OF NORTH CAROLINA
DEPARTMENT OF TRANSPORTATION
RALEIGH

STANDARD
LRFR SUMMARY FOR 25' CORED SLAB UNIT 90° SKEW
(NON-INTERSTATE TRAFFIC)

REVISIONS						SHEET NO.
NO.	BY	DATE	NO.	BY	DATE	S-5
1			3			TOTAL SHEETS
2			4			19

HNTB NORTH CAROLINA, P.C.
NC License No. C-1554
343 E. Six Forks Rd., Suite 200, Raleigh, N.C. 27609

DRAWN BY B. ALSTON DATE 1/22
CHECKED BY P. BARBER DATE 1/22
DESIGN ENGINEER OF RECORD P. BARBER DATE 2/22
DWG. NO. 5

ASSEMBLED BY : BJA DATE : 1/22
CHECKED BY : PJB DATE : 1/22
DRAWN BY : CVC 6/10
CHECKED BY : DNS 6/10

DOCUMENT NOT CONSIDERED FINAL UNLESS ALL SIGNATURES COMPLETED

4/29/2022 11:10:53 AM
_MOT_009_BP3_R002_SMU_GDDS_005_B10287.dgn

STD. NO. 21LRFR1_90S_25L

DocuSign Envelope ID: 3D5F064D-D375-4105-8AA2-B7474C92A929

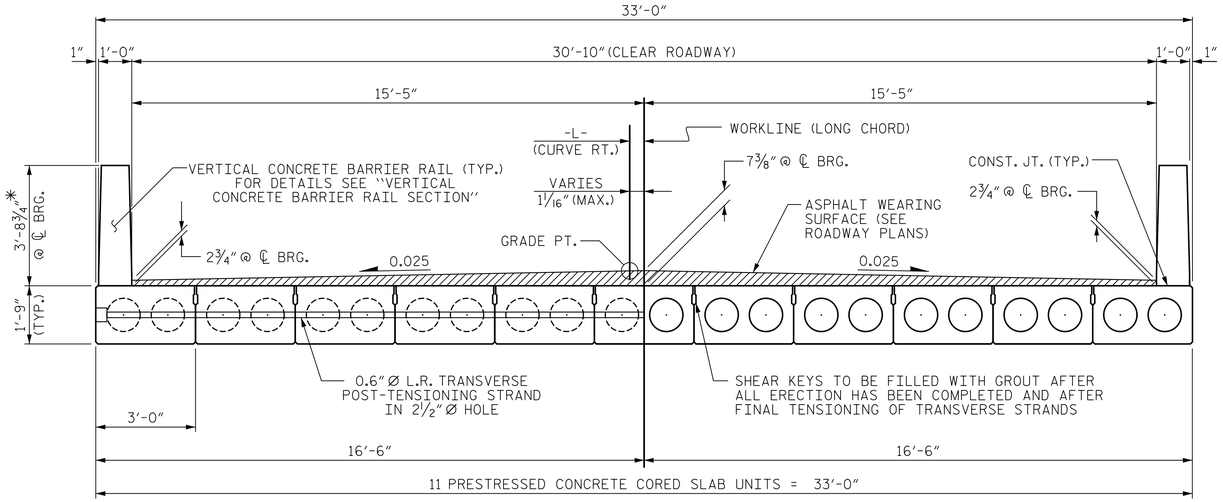

HALF SECTION AT INTERMEDIATE DIAPHRAGMS

TYPICAL SECTION

HALF SECTION THROUGH VOIDS

* - THE MAXIMUM BARRIER RAIL HEIGHT AND ASPHALT THICKNESS IS SHOWN. THE HEIGHT OF THE BARRIER RAIL AND ASPHALT THICKNESS VARIES WHILE THE TOP OF THE BARRIER RAIL FOLLOWS THE PROFILE OF THE GUTTERLINE.

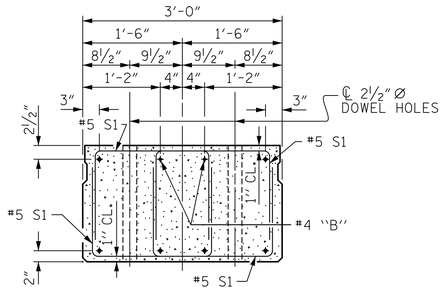

END ELEVATION

SHOWING PLACEMENT OF DOUBLE STIRRUPS AND LOCATION OF DOWEL HOLES. (STRAND LAYOUT NOT SHOWN.) INTERIOR SLAB UNIT SHOWN-EXTERIOR SLAB UNIT SIMILAR EXCEPT SHEAR KEY LOCATION.

NOTES:

AT ALL FIXED AND EXPANSION ENDS OF EXTERIOR CORED SLAB SECTIONS WITH HOLD-DOWN ANCHOR BOLTS, NUTS FOR ANCHOR BOLTS SHALL BE FINGER-TIGHTENED AND THEN BACKED OFF 1/2 TURN. THE THREAD OF THE NUT AND BOLT SHALL THEN BE BURRED WITH A SHARP POINTED TOOL.

THE 2 1/2" Ø DOWEL HOLES AT FIXED ENDS OF EXTERIOR CORED SLAB SECTIONS WITH HOLD-DOWN ANCHOR BOLTS SHALL BE FILLED WITH NON-SHRINK GROUT TO THE BOTTOM OF THE ANCHOR BOLT BLOCKOUT PRIOR TO INSTALLING THE ANCHOR PLATES, WASHERS, AND NUTS. THE 2 1/2" Ø DOWEL HOLES AT EXPANSION ENDS OF EXTERIOR CORED SLAB SECTIONS WITH HOLD-DOWN ANCHOR BOLTS SHALL BE FILLED WITH JOINT SEALER MATERIAL TO THE BOTTOM OF THE ANCHOR BOLT BLOCKOUT PRIOR TO INSTALLING THE ANCHOR PLATES, WASHERS, AND NUTS.

THE ANCHOR BOLT BLOCKOUTS IN EXTERIOR CORED SLAB SECTIONS SHALL BE FILLED WITH NON-SHRINK GROUT PRIOR TO PLACEMENT OF THE WEARING SURFACE.

FOR ADDITIONAL DETAILS, SEE SHEET 2 OF 5.

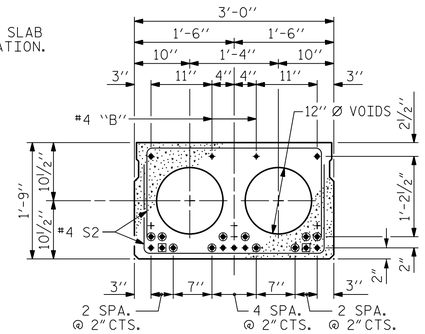

INTERIOR SLAB SECTION (25' UNIT)

(9 STRANDS REQUIRED)

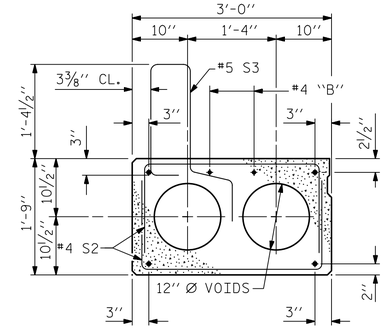

EXT. SLAB SECTION

(FOR PRESTRESSED STRAND LAYOUT, SEE INTERIOR SLAB SECTION.)

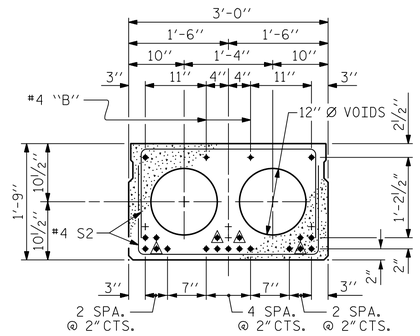

INTERIOR SLAB SECTION (55' UNIT)

(19 STRANDS REQUIRED)

0.6'' Ø LOW RELAXATION STRAND LAYOUT

BOND SHALL BE BROKEN ON THESE STRANDS FOR A DISTANCE OF 6'-0" FROM END OF CORED SLAB UNIT. SEE STANDARD SPECIFICATIONS, ARTICLE 1078-7.

BOND SHALL BE BROKEN ON THESE STRANDS FOR A DISTANCE OF 2'-0" FROM END OF CORED SLAB UNIT. SEE STANDARD SPECIFICATIONS, ARTICLE 1078-7.

OPTIONAL FULL LENGTH DEBONDED STRANDS. THESE STRANDS ARE NOT REQUIRED. IF THE FABRICATOR CHOOSES TO INCLUDE THESE STRANDS IN THE CORED SLAB UNIT, THE STRANDS SHALL BE DEBONDED FOR THE FULL LENGTH OF THE UNIT AT NO ADDITIONAL COST. SEE STANDARD SPECIFICATIONS, ARTICLE 1078-7.

DEBONDING LEGEND

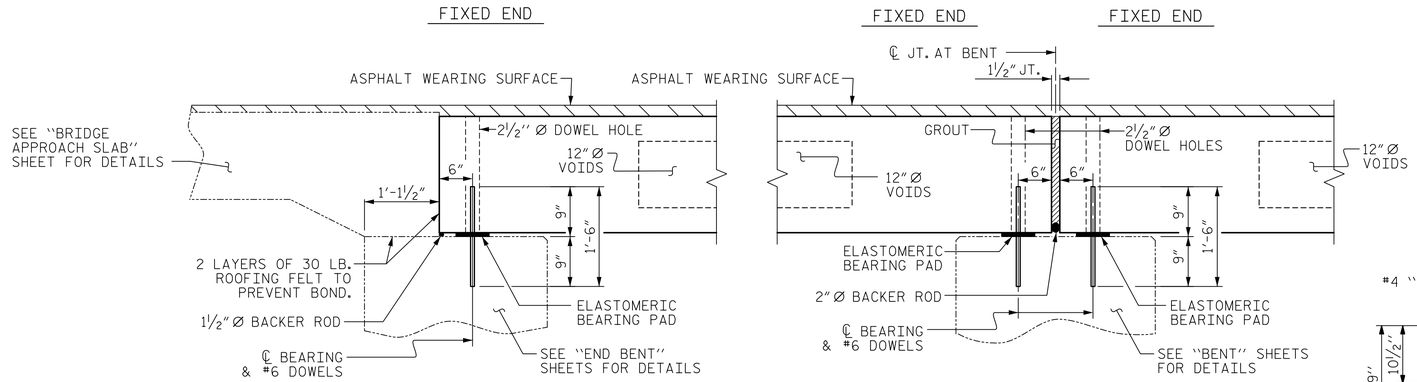

SECTION AT END BENT

SECTION AT BENT

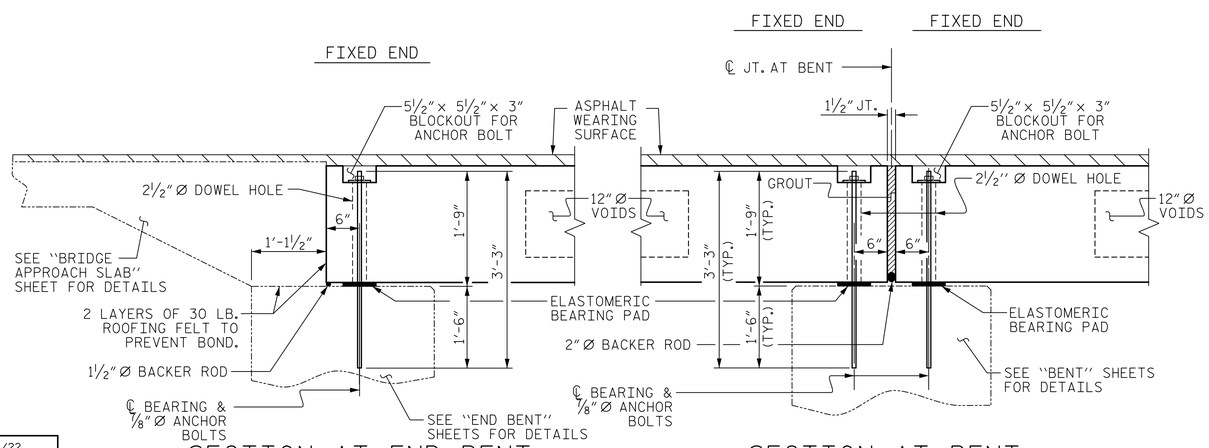

SECTION AT END BENT

(TYP. FOR EXTERIOR CORED SLABS)

SECTION AT BENT

(TYP. FOR EXTERIOR CORED SLABS)

PROJECT NO. BP3.R002

SAMPSON COUNTY

STATION: 13+92.00 -L-

SHEET 1 OF 5

STATE OF NORTH CAROLINA
DEPARTMENT OF TRANSPORTATION
RALEIGH

STANDARD
3'-0'' X 1'-9''
PRESTRESSED CONCRETE
CORED SLAB UNIT
90° SKEW

NORTH CAROLINA PROFESSIONAL SEAL 12916 ENGINEER PAUL J. BARBER
DocuSigned by: Paul J. Barber 4/29/2022

ASSEMBLED BY :	BJA	DATE :	1/22
CHECKED BY :	PJB	DATE :	1/22
DRAWN BY :	DGE	5/09	
CHECKED BY :	BCH	6/09	

DOCUMENT NOT CONSIDERED FINAL UNLESS ALL SIGNATURES COMPLETED

HNTB NORTH CAROLINA, P.C.
NC License No. C-1554
343 E. Six Forks Rd., Suite 200, Raleigh, N.C. 27609

DRAWN BY	B. ALSTON	DATE	1/22
CHECKED BY	P. BARBER	DATE	1/22
DESIGN ENGINEER OF RECORD	P. BARBER	DATE	2/22

DWG. NO. 6

REVISIONS						SHEET NO.
NO.	BY	DATE	NO.	BY	DATE	S-6
1			3			TOTAL SHEETS
2			4			19

STD. NO. 21" PCS2_33_90S

4/29/2022 1:29:53 PM
_MOT_D11_BP3.R002_SMU_CSD1_006_B10287.dgn

DocuSign Envelope ID: 3D5F064D-D375-4105-8AA2-B7474C92A929

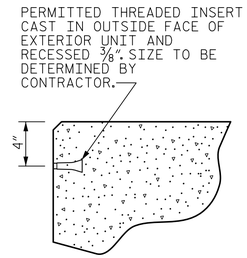

THREADED INSERT DETAIL

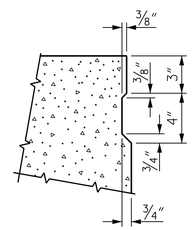

SHEAR KEY DETAIL

NOTE: OMIT SHEAR KEY ON OUTSIDE FACE OF EXTERIOR CORED SLABS.

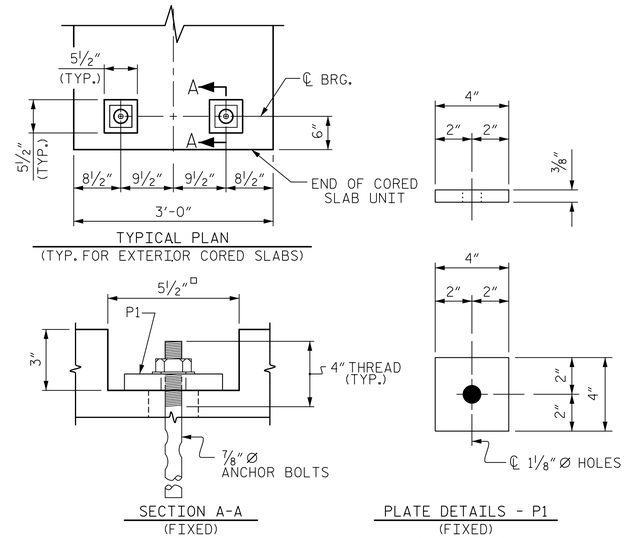

TYPICAL PLAN
(TYP. FOR EXTERIOR CORED SLABS)

SECTION A-A
(FIXED)

PLATE DETAILS - P1
(FIXED)
P1 (16 REQ'D.)

BLOCKOUT DETAIL FOR ANCHOR BOLTS

(TYP. FOR EXTERIOR CORED SLABS)

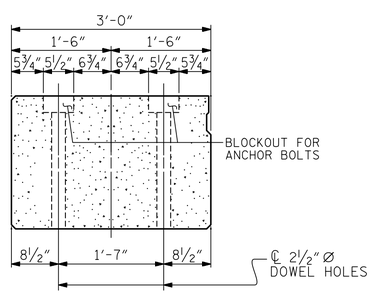

END ELEVATION

SHOWING LOCATION OF BLOCKOUT FOR ANCHOR BOLTS AND DOWEL HOLES.

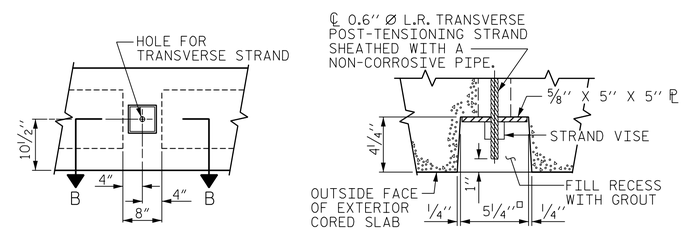

ELEVATION VIEW

SECTION B-B

GROUTED RECESS AT END OF POST-TENSIONED STRAND OF CORED SLABS

PROJECT NO. BP3.R002

SAMPSON COUNTY

STATION: 13+92.00 -L-

SHEET 2 OF 5

STATE OF NORTH CAROLINA
DEPARTMENT OF TRANSPORTATION
RALEIGH

STANDARD
3'-0" X 1'-9"
PRESTRESSED CONCRETE
CORED SLAB UNIT
90° SKEW

NORTH CAROLINA PROFESSIONAL SEAL 12916 ENGINEER PAUL J. BARBER

DocuSigned by: Paul J. Barber
4/29/2022

ASSEMBLED BY :	BJA	DATE : 1/22
CHECKED BY :	PJB	DATE : 1/22

DRAWN BY : DGE	5/09
CHECKED BY : BCH	6/09

DOCUMENT NOT CONSIDERED FINAL UNLESS ALL SIGNATURES COMPLETED

HNTB NORTH CAROLINA, P.C.
NC License No. C-1554
343 E. Six Forks Rd., Suite 200, Raleigh, N.C. 27609

DRAWN BY	B. ALSTON	DATE	1/22
CHECKED BY	P. BARBER	DATE	1/22
DESIGN ENGINEER OF RECORD	P. BARBER	DATE	2/22

DWG. NO. 7

REVISIONS						SHEET NO.
NO.	BY	DATE	NO.	BY	DATE	S-7
1			3			TOTAL SHEETS
2			4			19

STD. NO. 21" PCS2_33_90S

4/29/2022 1:33:45 PM
...\401_D13_BP3.R002_SMU_CS02_001_B10237.dgn

DocuSign Envelope ID: 3D5F064D-D375-4105-8AA2-B7474C92A929

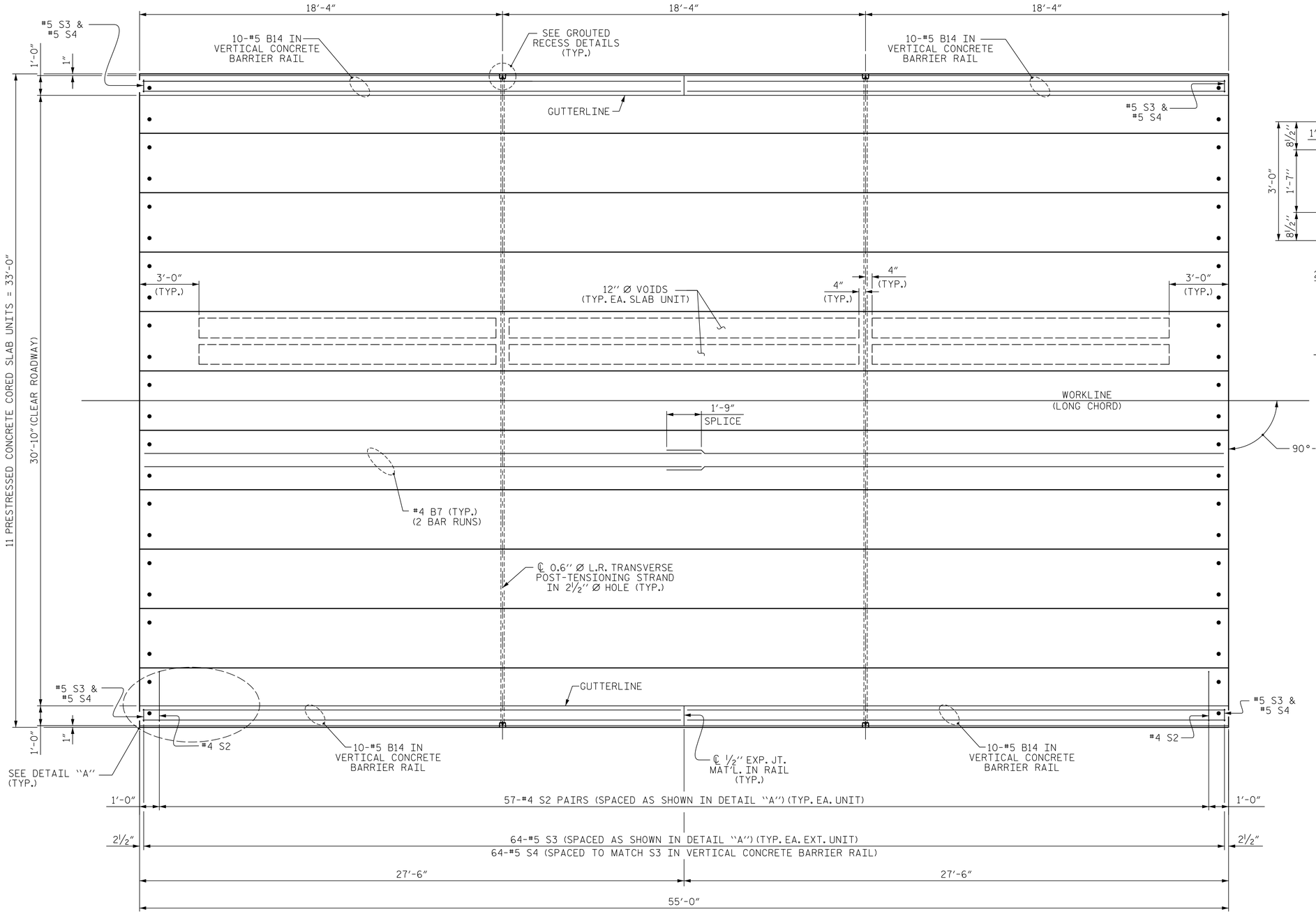

PLAN OF UNIT

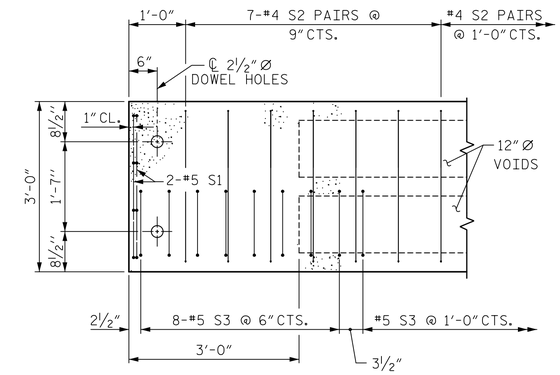

DETAIL "A"

(TYPICAL EACH END OF UNIT)
NOTE: EXTERIOR UNIT SHOWN - INTERIOR UNIT SIMILAR EXCEPT OMIT #5 S3 BARS.

PROJECT NO. BP3.R002

SAMPSON COUNTY

STATION: 13+92.00 -L-

SHEET 3 OF 5

NORTH CAROLINA PROFESSIONAL SEAL 12916 ENGINEER PAUL J. BARBER

DocuSigned by: Paul J. Barber 180B9B573687416E...

4/29/2022

STATE OF NORTH CAROLINA
DEPARTMENT OF TRANSPORTATION
RALEIGH

PLAN OF 55' UNIT
30'-10" CLEAR ROADWAY
90° SKEW
SPAN A

ASSEMBLED BY : BJA	DATE : 1/22
CHECKED BY : PJB	DATE : 1/22

DRAWN BY : DGE	3/09	REV.	12/5/11	MAA/AAC
CHECKED BY : BCH	3/09	REV.	8/14	MAA/TMG

DOCUMENT NOT CONSIDERED FINAL UNLESS ALL SIGNATURES COMPLETED

HNTB

HNTB NORTH CAROLINA, P.C.
NC License No. C-1554
343 E. Six Forks Rd., Suite 200, Raleigh, N.C. 27609

DRAWN BY	B. ALSTON	DATE	1/22
CHECKED BY	P. BARBER	DATE	1/22
DESIGN ENGINEER OF RECORD	P. BARBER	DATE	2/22

DWG. NO. 8

REVISIONS						SHEET NO.
NO.	BY	DATE	NO.	BY	DATE	S-8
1			3			TOTAL SHEETS
2			4			19

STD. NO. 21" PCS_33_90S_55L

4/29/2022 11:06:00 AM
_1401_D15_BP3.R002_SMU_CS03_008_8 10257.dgn

DocuSign Envelope ID: 3D5F064D-D375-4105-8AA2-B7474C92A929

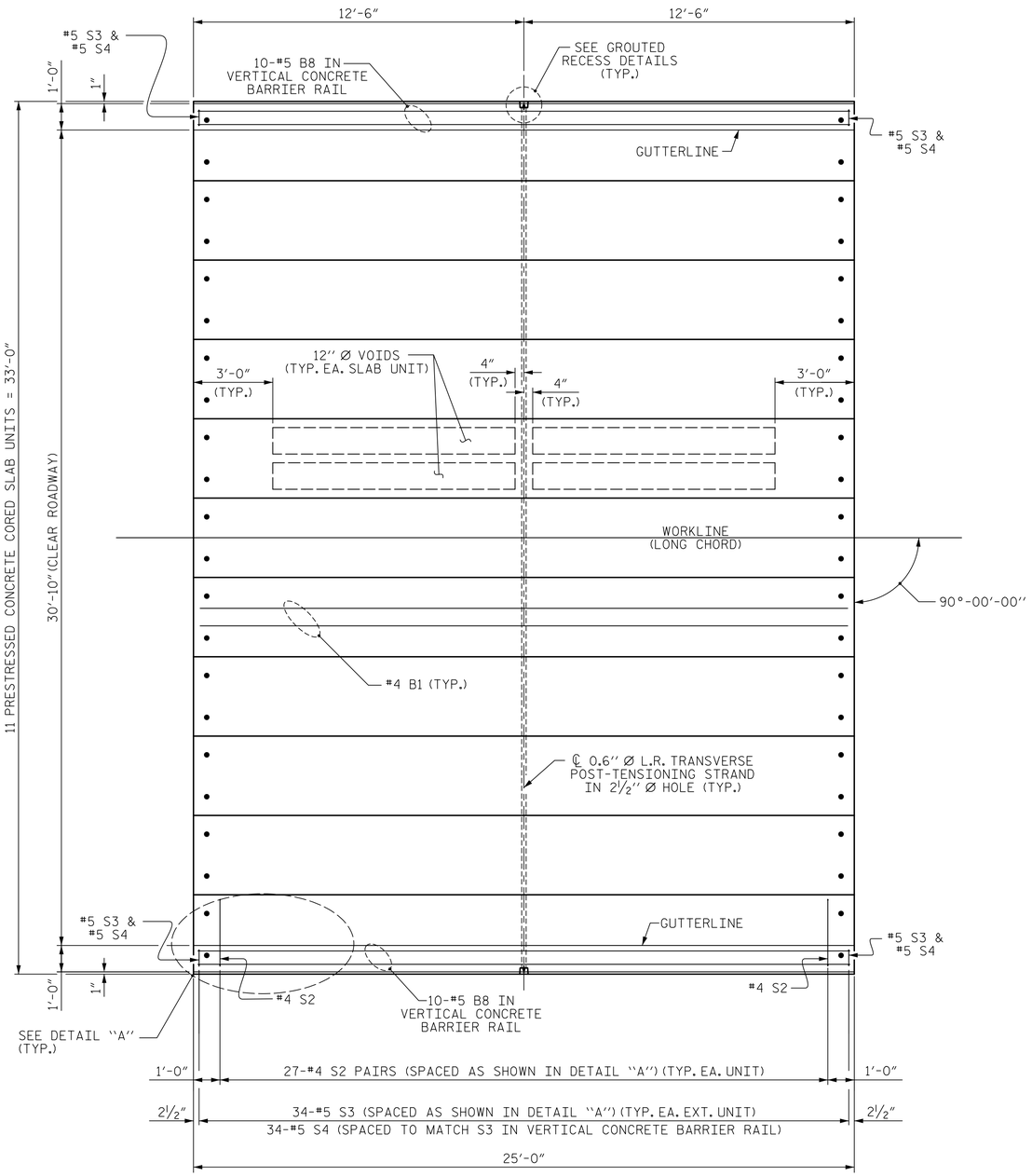

PLAN OF UNIT

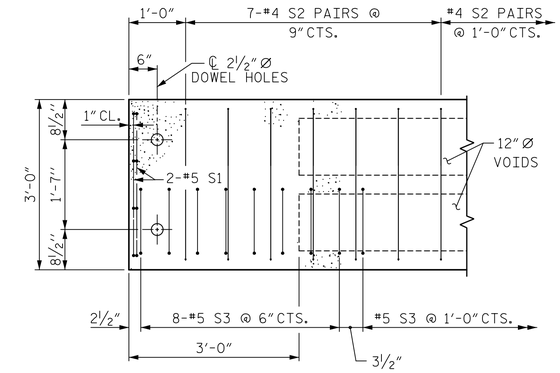

DETAIL "A"

(TYPICAL EACH END OF UNIT)
NOTE: EXTERIOR UNIT SHOWN - INTERIOR UNIT SIMILAR EXCEPT OMIT #5 S3 BARS.

PROJECT NO. BP3.R002

SAMPSON COUNTY

STATION: 13+92.00 -L-

SHEET 4 OF 5

STATE OF NORTH CAROLINA
DEPARTMENT OF TRANSPORTATION
RALEIGH

PLAN OF 25' UNIT
30'-10" CLEAR ROADWAY
90° SKEW
SPAN B

NORTH CAROLINA PROFESSIONAL SEAL 12916 ENGINEER PAUL J. BARBER

DocuSigned by: Paul J. Barber
4/29/2022

ASSEMBLED BY : BJA	DATE : 1/22
CHECKED BY : PJB	DATE : 1/22

DRAWN BY : DGE 3/09	REV. 12/5/11 MAA/AAC
CHECKED BY : BCH 3/09	REV. 8/14 MAA/TMG

DOCUMENT NOT CONSIDERED FINAL UNLESS ALL SIGNATURES COMPLETED

HNTB NORTH CAROLINA, P.C.
NC License No. C-1554
343 E. Six Forks Rd., Suite 200, Raleigh, N.C. 27609

DRAWN BY	B. ALSTON	DATE 1/22
CHECKED BY	P. BARBER	DATE 1/22
DESIGN ENGINEER OF RECORD	P. BARBER	DATE 2/22

DWG. NO. 9

REVISIONS						SHEET NO.
NO.	BY	DATE	NO.	BY	DATE	S-9
1			3			TOTAL SHEETS
2			4			19

STD. NO. 21" PCS_33_90S_25L

4/29/2022
11:06:06 AM
_MOT_DT7_BP3_R002_SMU_CS04_009_B102SF.dgn

DocuSign Envelope ID: 3D5F064D-D375-4105-8AA2-B7474C92A929

BILL OF MATERIAL FOR ONE 25′ CORED SLAB UNIT

BAR	NUMBER	SIZE	TYPE	EXTERIOR UNIT LENGTH	EXTERIOR UNIT WEIGHT	INTERIOR UNIT LENGTH	INTERIOR UNIT WEIGHT
B1	2	#4	STR	24′-8″	33	24′-8″	33
S1	8	#5	3	4′-3″	35	4′-3″	35
S2	54	#4	3	5′-4″	192	5′-4″	192
✳ S3	34	#5	1	5′-7″	198		
REINFORCING STEEL			LBS.		260		260
✳ EPOXY COATED REINFORCING STEEL			LBS.		198		
5000 P.S.I. CONCRETE			CU. YDS.		3.7		3.7
0.6″ Ø L.R. STRANDS			No.		9		9

BILL OF MATERIAL FOR ONE 55′ CORED SLAB UNIT

BAR	NUMBER	SIZE	TYPE	EXTERIOR UNIT LENGTH	EXTERIOR UNIT WEIGHT	INTERIOR UNIT LENGTH	INTERIOR UNIT WEIGHT
B7	4	#4	STR	28′-3″	75	28′-3″	75
S1	8	#5	3	4′-3″	35	4′-3″	35
S2	114	#4	3	5′-4″	406	5′-4″	406
✳ S3	64	#5	1	5′-7″	373		
REINFORCING STEEL			LBS.		516		516
✳ EPOXY COATED REINFORCING STEEL			LBS.		373		
6500 P.S.I. CONCRETE			CU. YDS.		7.8		7.8
0.6″ Ø L.R. STRANDS			No.		19		19

BAR TYPES

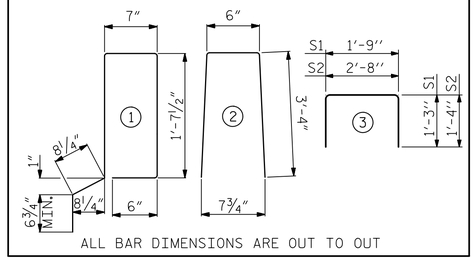

ALL BAR DIMENSIONS ARE OUT TO OUT

CONCRETE RELEASE STRENGTH

UNIT	PSI
25′ UNITS	4000
55′ UNITS	4900

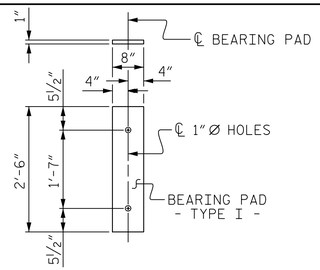

FIXED END
(TYPE I - 44 REQ′D)

CORED SLABS REQUIRED

	NUMBER	LENGTH	TOTAL LENGTH
25′ UNIT			
EXTERIOR C.S.	2	25′-0″	50′-0″
INTERIOR C.S.	9	25′-0″	225′-0″
TOTAL	11		275′-0″

CORED SLABS REQUIRED

	NUMBER	LENGTH	TOTAL LENGTH
55′ UNIT			
EXTERIOR C.S.	2	55′-0″	110′-0″
INTERIOR C.S.	9	55′-0″	495′-0″
TOTAL	11		605′-0″

DEAD LOAD DEFLECTION AND CAMBER

	3′-0″ x 1′-9″
25′ CORED SLAB UNIT	0.6″ Ø L.R. STRAND
CAMBER (SLAB ALONE IN PLACE)	¼″ ↑
DEFLECTION DUE TO SUPERIMPOSED DEAD LOAD✳✳	⅛″ ↓
FINAL CAMBER	⅛″ ↑

✳✳ INCLUDES FUTURE WEARING SURFACE

DEAD LOAD DEFLECTION AND CAMBER

	3′-0″ x 1′-9″
55′ CORED SLAB UNIT	0.6″ Ø L.R. STRAND
CAMBER (SLAB ALONE IN PLACE)	1½″ ↑
DEFLECTION DUE TO SUPERIMPOSED DEAD LOAD✳✳	⅜″ ↓
FINAL CAMBER	1⅛″ ↑

✳✳ INCLUDES FUTURE WEARING SURFACE

NOTES

ALL PRESTRESSING STRANDS SHALL BE 7-WIRE LOW RELAXATION GRADE 270 STRANDS AND SHALL CONFORM TO AASHTO M203 EXCEPT FOR SAMPLING REQUIREMENTS WHICH SHALL BE IN ACCORDANCE WITH THE STANDARD SPECIFICATIONS.

ALL REINFORCING STEEL CAST WITH THE CORED SLAB SECTIONS SHALL BE GRADE 60 AND SHALL BE INCLUDED IN THE UNIT PRICE BID FOR PRESTRESSED CONCRETE CORED SLABS.

RECESSES FOR TRANSVERSE STRANDS SHALL BE GROUTED AFTER THE TENSIONING OF THE STRANDS.

THE 2½″Ø DOWEL HOLES AT FIXED ENDS OF SLAB SECTIONS SHALL BE FILLED WITH NON-SHRINK GROUT.

THE BACKER RODS SHALL CONFORM TO THE REQUIREMENTS OF TYPE M BOND BREAKER. SEE SECTION 1028 OF THE STANDARD SPECIFICATIONS.

WHEN CORED SLABS ARE CAST, AN INTERNAL HOLD-DOWN SYSTEM SHALL BE EMPLOYED TO PREVENT VOIDS FROM RISING OR MOVING SIDEWAYS. AT LEAST SIX WEEKS PRIOR TO CASTING CORED SLABS, THE CONTRACTOR SHALL SUBMIT TO THE ENGINEER FOR REVIEW AND COMMENT, DETAILED DRAWINGS OF THE PROPOSED HOLD-DOWN SYSTEM. IN ADDITION TO STRUCTURAL DETAILS, LOCATION AND SPACING OF THE HOLD-DOWNS SHALL BE INDICATED.

ALL REINFORCING STEEL IN THE VERTICAL CONCRETE BARRIER RAIL SHALL BE EPOXY COATED.

PRESTRESSING STRANDS SHALL BE CUT FLUSH WITH THE CORED SLAB UNIT ENDS.

APPLY EPOXY PROTECTIVE COATING TO CORED SLAB UNIT ENDS.

GROOVED CONTRACTION JOINTS, ½″ IN DEPTH, SHALL BE TOOLED IN ALL EXPOSED FACES OF THE BARRIER RAIL AND IN ACCORDANCE WITH ARTICLE 825-10(B) OF THE STANDARD SPECIFICATIONS. A CONTRACTION JOINT SHALL BE LOCATED AT EACH THIRD POINT BETWEEN BARRIER RAIL EXPANSION JOINTS. ONLY ONE CONTRACTION JOINT IS REQUIRED AT MIDPOINT OF BARRIER RAIL SEGMENTS LESS THAN 20 FEET IN LENGTH AND NO CONTRACTION JOINTS ARE REQUIRED FOR THOSE SEGMENTS LESS THAN 10 FEET IN LENGTH.

FLAME CUTTING OF THE TRANSVERSE POST-TENSIONING STRAND IS NOT ALLOWED.

THE TRANSFER OF LOAD FROM THE ANCHORAGES TO THE CORED SLAB UNIT SHALL BE DONE WHEN THE CONCRETE HAS REACHED A COMPRESSIVE STRENGTH OF NOT LESS THAN THE REQUIRED STRENGTH SHOWN IN THE "CONCRETE RELEASE STRENGTH" TABLE.

FOR GROUT FOR STRUCTURES, SEE SPECIAL PROVISIONS.

THE PERMITTED THREADED INSERTS ARE DETAILED AS AN OPTION FOR THE CONTRACTOR TO ATTACH FALSEWORK AND FORMWORK DURING CONSTRUCTION.

THE PERMITTED THREADED INSERTS IN THE EXTERIOR UNITS SHALL BE SIZED BY THE CONTRACTOR, SPACED AT 4′-0″ CENTERS AND GALVANIZED IN ACCORDANCE WITH SECTION 1076 OF THE STANDARD SPECIFICATIONS. STAINLESS STEEL THREADED INSERTS MAY BE USED AS AN ALTERNATE.

THE PERMITTED THREADED INSERTS SHALL BE GROUTED BY THE CONTRACTOR IMMEDIATELY FOLLOWING REMOVAL OF THE FALSEWORK.

THE COST OF THE PERMITTED THREADED INSERTS SHALL BE INCLUDED IN THE PRICE BID FOR THE PRECAST UNITS.

ELASTOMERIC BEARING DETAILS

ELASTOMER IN ALL BEARINGS SHALL BE 50 DUROMETER HARDNESS.

BILL OF MATERIAL FOR VERTICAL CONCRETE BARRIER RAIL

BAR	BARS PER PAIR OF EXTERIOR UNITS	TOTAL NO.	SIZE	TYPE	LENGTH	WEIGHT
	25′ UNIT					
✳ B8	20	20	#5	STR	24′-7″	513
✳ S4	68	68	#5	2	7′-2″	508
✳ EPOXY COATED REINFORCING STEEL				LBS.		1021
CLASS AA CONCRETE				CU.YDS.		6.4
TOTAL VERTICAL CONCRETE BARRIER RAIL				LN. FT.		50.25

BILL OF MATERIAL FOR VERTICAL CONCRETE BARRIER RAIL

BAR	BARS PER PAIR OF EXTERIOR UNITS	TOTAL NO.	SIZE	TYPE	LENGTH	WEIGHT
	55′ UNIT					
✳ B14	40	40	#5	STR	27′-1″	1130
✳ S4	128	128	#5	2	7′-2″	957
✳ EPOXY COATED REINFORCING STEEL				LBS.		2087
CLASS AA CONCRETE				CU.YDS.		14.1
TOTAL VERTICAL CONCRETE BARRIER RAIL				LN. FT.		110.25

GUTTERLINE ASPHALT THICKNESS & RAIL HEIGHT

	ASPHALT OVERLAY THICKNESS @ MID-SPAN	RAIL HEIGHT @ MID-SPAN
25′ UNITS	2⅝″	3′-8⅝″
55′ UNITS	1⅝″	3′-7⅝″

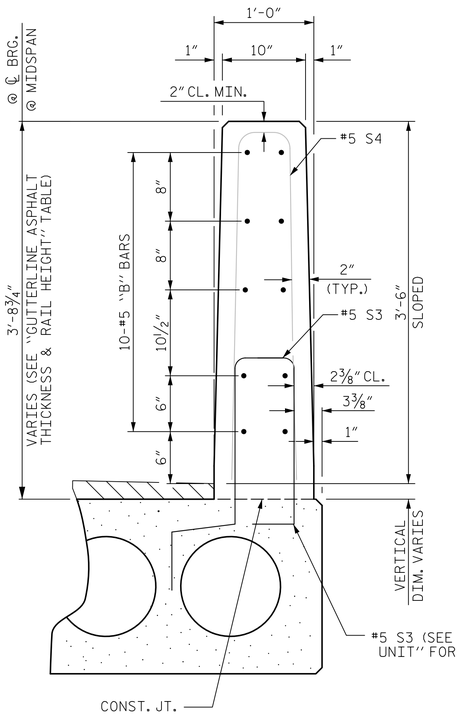

VERTICAL CONCRETE BARRIER RAIL SECTION

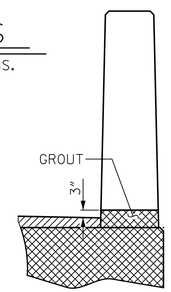

SECTION T-T
AT OPEN JOINT AT BENT
(THIS IS TO BE USED WHERE FOAM JOINT IS NOT USED)

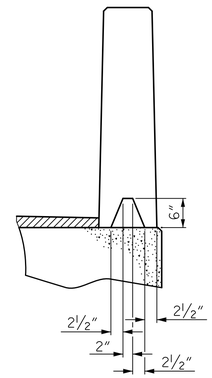

SECTION S-S
AT DAM IN OPEN JOINT
(THIS IS TO BE USED ONLY WHEN SLIP FORM IS USED)

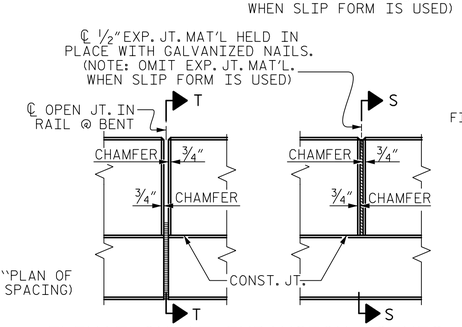

ELEVATION AT EXPANSION JOINTS

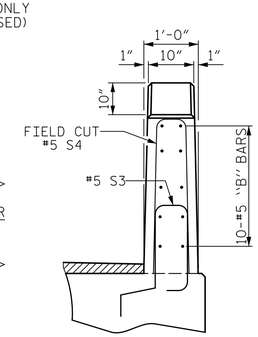

END VIEW

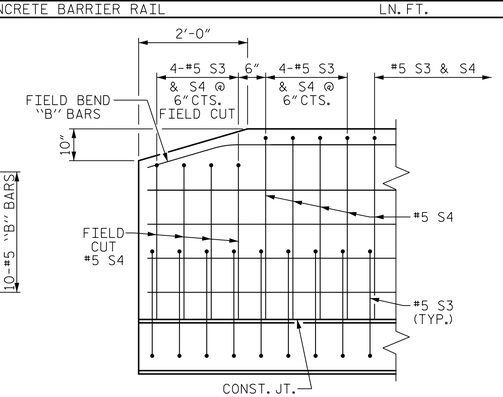

SIDE VIEW

END OF RAIL DETAILS

GRADE 270 STRANDS

	0.6″ Ø L.R.
AREA (SQUARE INCHES)	0.217
ULTIMATE STRENGTH (LBS. PER STRAND)	58,600
APPLIED PRESTRESS (LBS. PER STRAND)	43,950

PROJECT NO. BP3.R002
SAMPSON COUNTY
STATION: 13+92.00 -L-

SHEET 5 OF 5

STATE OF NORTH CAROLINA
DEPARTMENT OF TRANSPORTATION
RALEIGH

STANDARD
3′-0″ X 1′-9″
PRESTRESSED CONCRETE
CORED SLAB UNIT
90° SKEW

NORTH CAROLINA PROFESSIONAL SEAL 12916 ENGINEER PAUL J. BARBER
DocuSigned by: Paul J. Barber 4/29/2022

ASSEMBLED BY : BJA	DATE : 1/22
CHECKED BY : PJB	DATE : 1/22
DRAWN BY : DGE 5/09	REV. 5/18 MAA/THC
CHECKED BY : BCH 6/09	

DOCUMENT NOT CONSIDERED FINAL UNLESS ALL SIGNATURES COMPLETED

HNTB NORTH CAROLINA, P.C.
NC License No. C-1554
343 E. Six Forks Rd., Suite 200, Raleigh, N.C. 27609

DRAWN BY B. ALSTON DATE 1/22
CHECKED BY P. BARBER DATE 1/22
DESIGN ENGINEER OF RECORD P. BARBER DATE 2/22
DWG. NO. 10

REVISIONS						SHEET NO.
NO.	BY	DATE	NO.	BY	DATE	S-10
1			3			TOTAL SHEETS
2			4			19

STD. NO. 21″PCS3_33_90S

4/29/2022 1:06:11 AM
J:\401_D19_BP3_R002_SMU_DS05_D10_B1029T.dgn

DocuSign Envelope ID: 3D5F064D-D375-4105-8AA2-B7474C92A929

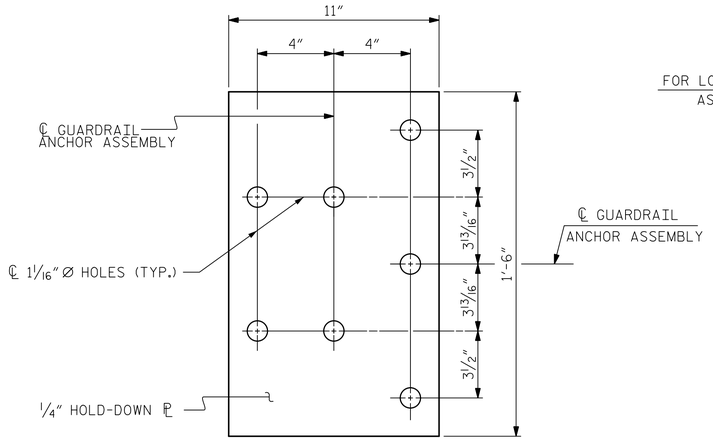

PLAN

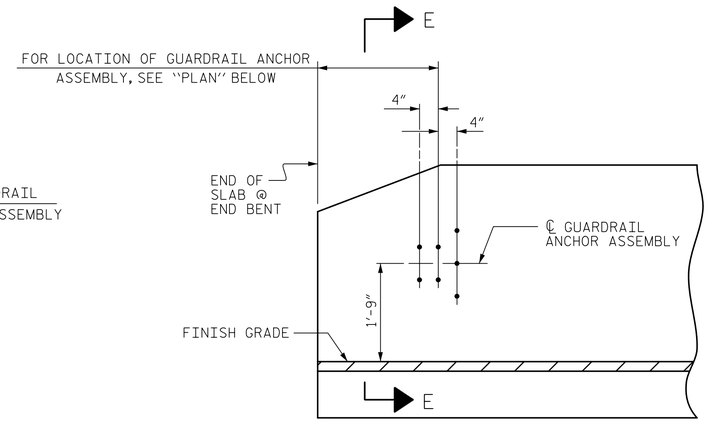

ELEVATION

NOTES

THE GUARDRAIL ANCHOR ASSEMBLY SHALL CONSIST OF A 1/4" HOLD DOWN PLATE AND 7 - 7/8" Ø BOLTS WITH NUTS AND WASHERS.

THE HOLD-DOWN PLATE SHALL CONFORM TO AASHTO M270 GRADE 36. AFTER FABRICATION, THE HOLD-DOWN PLATE SHALL BE HOT-DIP GALVANIZED IN ACCORDANCE WITH AASHTO M111.

BOLTS SHALL CONFORM TO THE REQUIREMENTS OF ASTM A307 AND NUTS SHALL CONFORM TO THE REQUIREMENTS OF AASHTO M291. BOLTS, NUTS AND WASHERS SHALL BE GALVANIZED. (AT THE CONTRACTOR'S OPTION, STAINLESS STEEL BOLTS, NUTS AND WASHERS MAY BE USED AS AN ALTERNATE FOR THE 7/8" Ø GALVANIZED BOLTS, NUTS AND WASHERS. THEY SHALL CONFORM TO OR EXCEED THE MECHANICAL REQUIREMENTS OF ASTM A307. THE USE OF THIS ALTERNATE SHALL BE APPROVED BY THE ENGINEER.)

THE GUARDRAIL ANCHOR ASSEMBLY IS REQUIRED AT ALL POINTS WHERE APPROACH GUARDRAIL IS TO BE ATTACHED TO THE END OF BARRIER RAIL. FOR POINTS OF ATTACHMENT, SEE SKETCH.

AFTER INSTALLATION, THE EXPOSED THREAD OF THE BOLT SHALL BE BURRED WITH A SHARP POINTED TOOL.

THE COST OF THE GUARDRAIL ANCHOR ASSEMBLY SHALL BE INCLUDED IN THE UNIT CONTRACT PRICE BID FOR VERTICAL CONCRETE BARRIER RAIL.

THE VERTICAL REINFORCING BARS MAY BE SHIFTED SLIGHTLY IN THE VERTICAL CONCRETE BARRIER RAIL TO CLEAR ASSEMBLY BOLTS.

THE 1 1/4" Ø HOLES SHALL BE FORMED OR DRILLED WITH A CORE BIT. IMPACT TOOLS WILL NOT BE PERMITTED. ANY CONCRETE DAMAGED BY THIS WORK SHALL BE REPAIRED TO THE SATISFACTION OF THE ENGINEER.

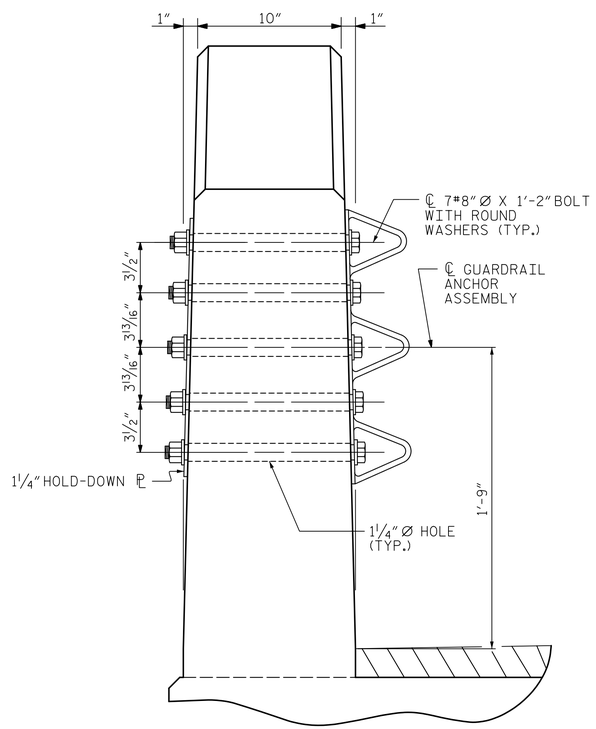

SECTION E-E

GUARDRAIL ANCHOR ASSEMBLY DETAILS

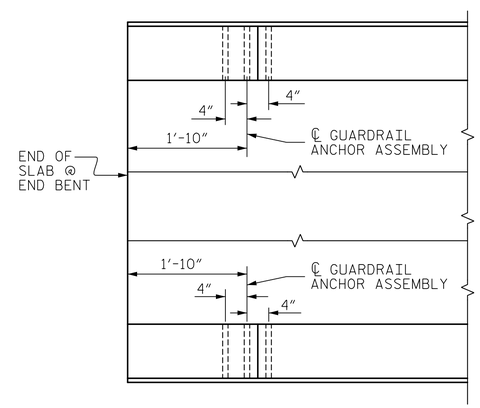

PLAN

LOCATION OF ANCHORS FOR GUARDRAIL

END BENT #1 SHOWN, END BENT #2 SIMILAR.

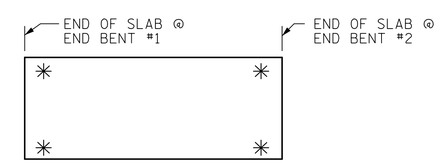

SKETCH SHOWING POINTS OF ATTACHMENT

✳ DENOTES GUARDRAIL ANCHOR ASSEMBLY

PROJECT NO. BP3.R002

SAMPSON COUNTY

STATION: 13+92.00 -L-

NORTH CAROLINA PROFESSIONAL SEAL 12916 ENGINEER PAUL J. BARBER

DocuSigned by: Paul J. Barber 4/29/2022

STATE OF NORTH CAROLINA
DEPARTMENT OF TRANSPORTATION
RALEIGH

STANDARD
GUARDRAIL ANCHORAGE DETAILS FOR VERTICAL CONCRETE BARRIER RAIL

REVISIONS						SHEET NO.
NO.	BY	DATE	NO.	BY	DATE	S-11
1			3			TOTAL SHEETS
2			4			19

HNTB NORTH CAROLINA, P.C.
NC License No. C-1554
343 E. Six Forks Rd., Suite 200, Raleigh, N.C. 27609

DRAWN BY	B. ALSTON	DATE	1/22
CHECKED BY	P. BARBER	DATE	1/22
DESIGN ENGINEER OF RECORD	P. BARBER	DATE	2/22

DWG. NO. II

DOCUMENT NOT CONSIDERED FINAL UNLESS ALL SIGNATURES COMPLETED

ASSEMBLED BY :	BJA	DATE :	1/22
CHECKED BY :	PJB	DATE :	1/22

DRAWN BY :	MAA	5/10	REV. 1/15	MAA/TMG
CHECKED BY :	GM	5/10	REV. 12/17	MAA/THC
			REV. 5/18	MAA/THC

4/29/2022
1:26:17 AM
_\401_02_BP3.R002_SMU_GR_01_B10237.dgn

STD. NO. GRA3

DocuSign Envelope ID: 3D5F064D-D375-4105-8AA2-B7474C92A929

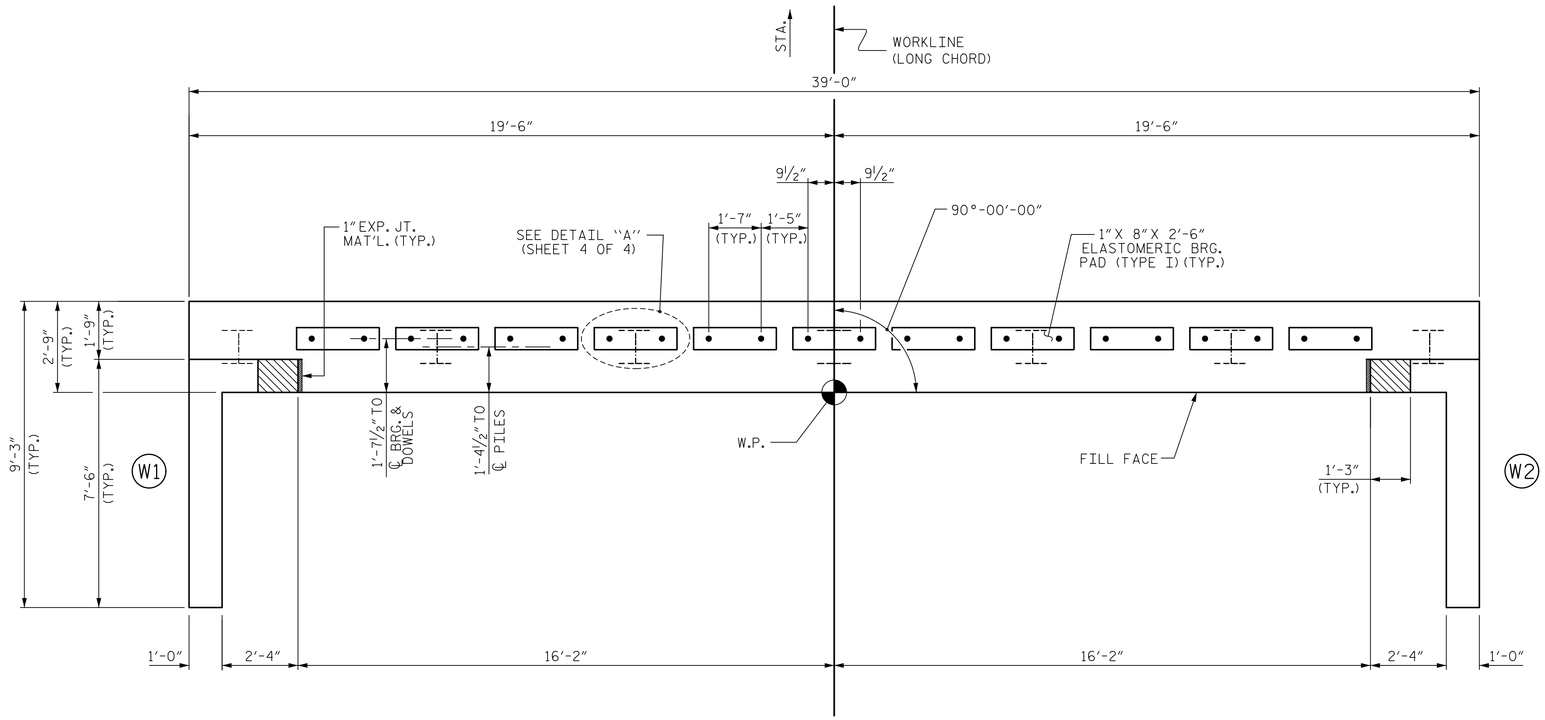

PLAN

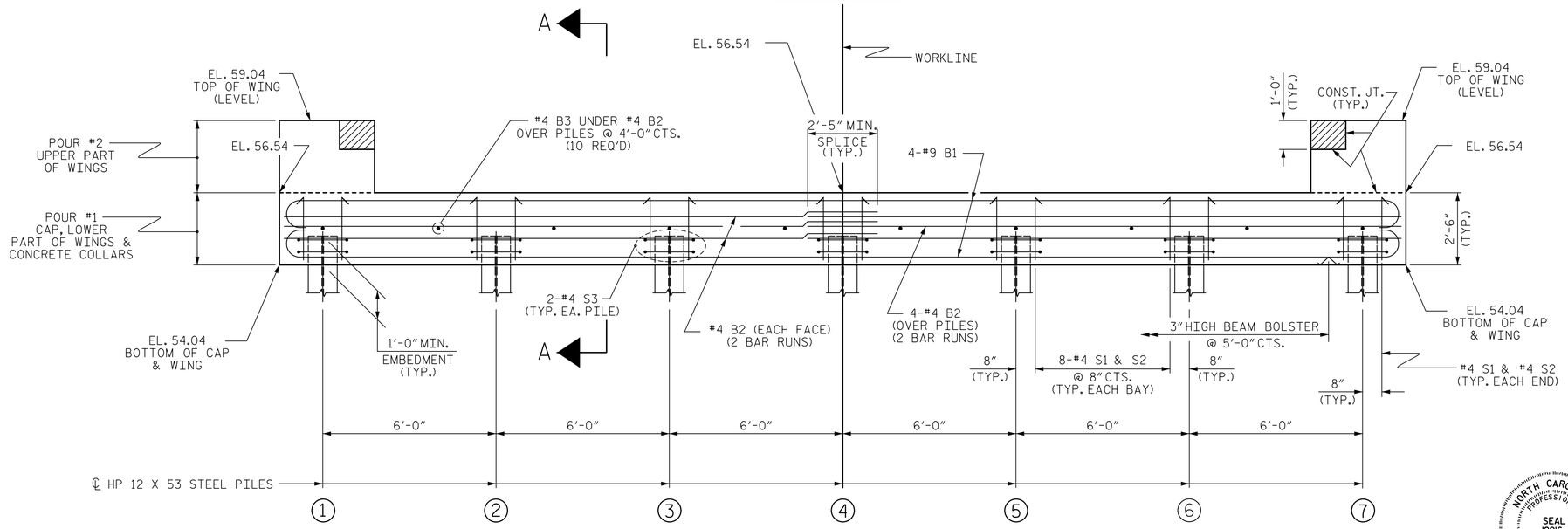

ELEVATION

WINGS NOT SHOWN FOR CLARITY.
FOR SECTION A-A, SEE SHEET 4 OF 4.
CONCRETE COLLARS FOR STEEL PILES NOT SHOWN IN PLAN AND ELEVATION VIEWS FOR CLARITY.
SEE "CORROSION PROTECTION FOR STEEL PILES DETAIL", SHEET 4 OF 4.

NOTES

STIRRUPS IN CAP MAY BE SHIFTED AS NECESSARY TO CLEAR DOWELS.

THE CONCRETE IN THE SHADED AREA OF THE WING SHALL BE POURED AFTER THE VERTICAL CONCRETE BARRIER RAIL IS CAST IF SLIP FORMING IS USED.

FOR PILE SPLICE DETAILS, SEE SHEET 4 OF 4.

FOR WING DETAILS, SEE SHEET 3 OF 4.

ANCHOR BOLTS SHALL MEET THE REQUIREMENTS OF ASTM A449. ANCHOR PLATES, WASHERS, AND NUTS SHALL MEET THE REQUIREMENTS OF THE STANDARD SPECIFICATIONS. ANCHOR BOLTS, ANCHOR PLATES, WASHERS, AND NUTS SHALL BE GALVANIZED IN ACCORDANCE WITH THE STANDARD SPECIFICATIONS.

NO SEPARATE PAYMENT SHALL BE MADE FOR THE ANCHOR BOLTS, ANCHOR PLATES, WASHERS, AND NUTS. THE COST OF THE MATERIAL AND INSTALLATION SHALL BE CONSIDERED INCIDENTAL TO VARIOUS PAY ITEMS.

PROJECT NO. BP3.R002
SAMPSON COUNTY
STATION: 13+92.00 -L-

SHEET 1 OF 4

STATE OF NORTH CAROLINA
DEPARTMENT OF TRANSPORTATION
RALEIGH

SUBSTRUCTURE
END BENT No. 1

NORTH CAROLINA PROFESSIONAL SEAL 12916 ENGINEER PAUL J. BARBER
DocuSigned by: Paul J. Barber 1E0C9B573687414...
4/29/2022

ASSEMBLED BY : BJA	DATE : 1/22
CHECKED BY : PJB	DATE : 2/22
DRAWN BY : DGE 01/10	REV. 4/15 MAA/TMG
CHECKED BY : MKT 01/10	

DOCUMENT NOT CONSIDERED FINAL UNLESS ALL SIGNATURES COMPLETED

HNTB
HNTB NORTH CAROLINA, P.C.
NC License No. C-1554
343 E. Six Forks Rd., Suite 200, Raleigh, N.C. 27609

DRAWN BY	M. WRIGHT	B. ALSTON	DATE 1/22
CHECKED BY		P. BARBER	DATE 2/22
DESIGN ENGINEER OF RECORD		P. BARBER	DATE 2/22

DWG. NO. 12

REVISIONS						SHEET NO.
NO.	BY	DATE	NO.	BY	DATE	S-12
1			3			TOTAL SHEETS
2			4			19

STD. NO. EB_33_90S

4/29/2022
11:06:23 AM
_MOT_023_BP3.R002_SMU_E01_012_B10297.dgn

DocuSign Envelope ID: 3D5F064D-D375-4105-8AA2-B7474C92A929

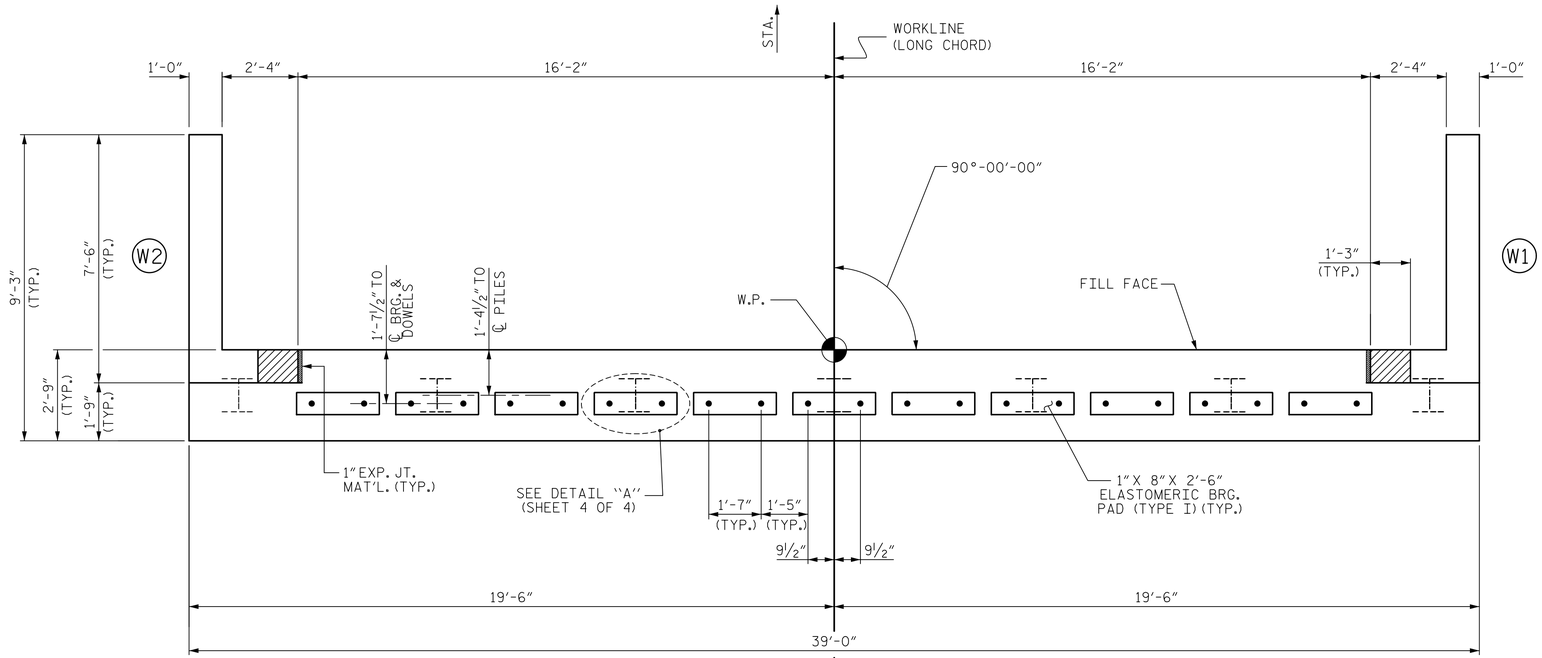

PLAN

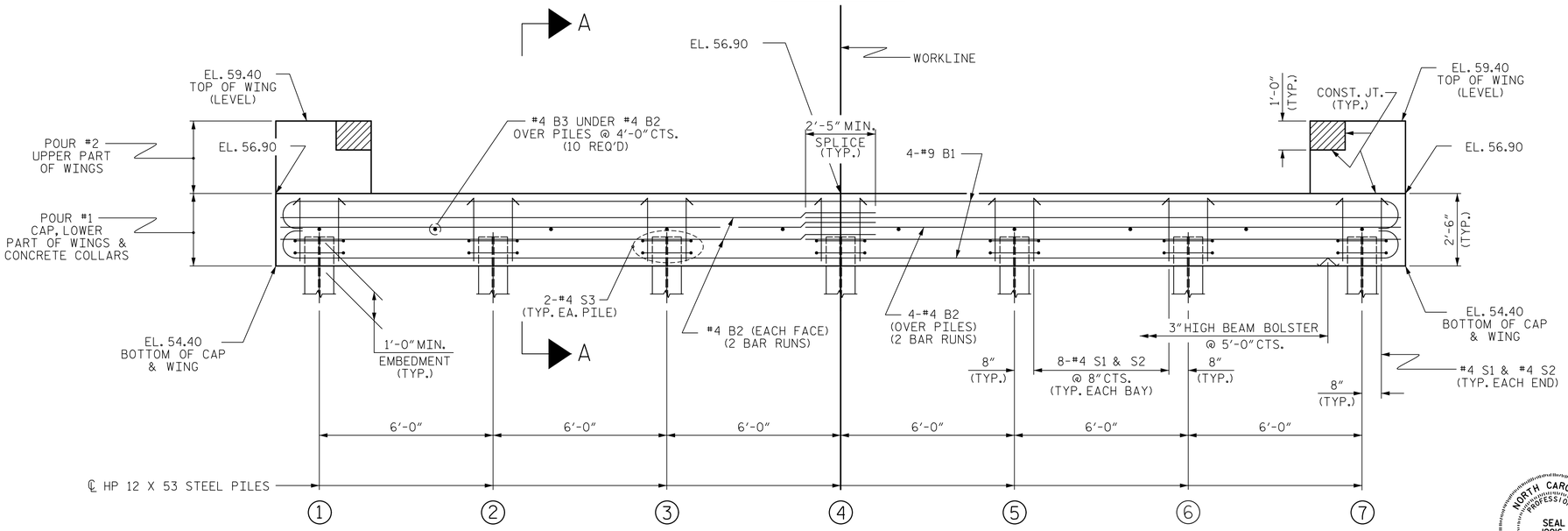

ELEVATION

WINGS NOT SHOWN FOR CLARITY.
FOR SECTION A-A, SEE SHEET 4 OF 4.
CONCRETE COLLARS FOR STEEL PILES NOT SHOWN IN PLAN AND ELEVATION VIEWS FOR CLARITY.
SEE "CORROSION PROTECTION FOR STEEL PILES DETAIL", SHEET 4 OF 4.

NOTES

STIRRUPS IN CAP MAY BE SHIFTED AS NECESSARY TO CLEAR DOWELS.

THE CONCRETE IN THE SHADED AREA OF THE WING SHALL BE POURED AFTER THE VERTICAL CONCRETE BARRIER RAIL IS CAST IF SLIP FORMING IS USED.

FOR PILE SPLICE DETAILS, SEE SHEET 4 OF 4.

FOR WING DETAILS, SEE SHEET 3 OF 4.

ANCHOR BOLTS SHALL MEET THE REQUIREMENTS OF ASTM A449. ANCHOR PLATES, WASHERS, AND NUTS SHALL MEET THE REQUIREMENTS OF THE STANDARD SPECIFICATIONS. ANCHOR BOLTS, ANCHOR PLATES, WASHERS, AND NUTS SHALL BE GALVANIZED IN ACCORDANCE WITH THE STANDARD SPECIFICATIONS.

NO SEPARATE PAYMENT SHALL BE MADE FOR THE ANCHOR BOLTS, ANCHOR PLATES, WASHERS, AND NUTS. THE COST OF THE MATERIAL AND INSTALLATION SHALL BE CONSIDERED INCIDENTAL TO VARIOUS PAY ITEMS.

PROJECT NO. BP3.R002
SAMPSON COUNTY
STATION: 13+92.00 -L-

SHEET 2 OF 4

STATE OF NORTH CAROLINA
DEPARTMENT OF TRANSPORTATION
RALEIGH

SUBSTRUCTURE
END BENT No. 2

NORTH CAROLINA PROFESSIONAL SEAL 12916 ENGINEER PAUL J. BARBER
DocuSigned by: Paul J. Barber 1B5736874E...
4/29/2022

ASSEMBLED BY : BJA		DATE : 1/22	
CHECKED BY : PJB		DATE : 2/22	
DRAWN BY : DGE	01/10	REV. 4/15	MAA/TMG
CHECKED BY : MKT	01/10		

DOCUMENT NOT CONSIDERED FINAL UNLESS ALL SIGNATURES COMPLETED

HNTB
HNTB NORTH CAROLINA, P.C.
NC License No. C-1554
343 E. Six Forks Rd., Suite 200, Raleigh, N.C. 27609

DRAWN BY	M. WRIGHT	B. ALSTON	DATE 1/22
CHECKED BY		P. BARBER	DATE 2/22
DESIGN ENGINEER OF RECORD		P. BARBER	DATE 2/22

DWG. NO. 13

REVISIONS						SHEET NO.
NO.	BY	DATE	NO.	BY	DATE	S-13
1			3			TOTAL SHEETS
2			4			19

STD. NO. EB_33_90S

4/29/2022
11:06:28 AM
_1401_025_BP3.R002_SMU_E02_013_B10297.dgn

DocuSign Envelope ID: 3D5F064D-D375-4105-8AA2-B7474C92A929

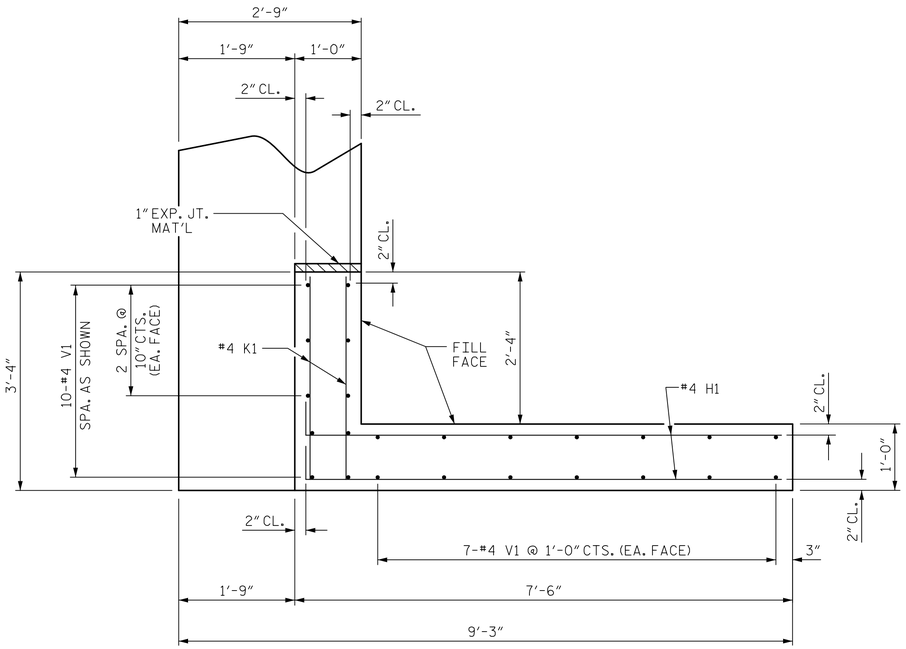

PLAN OF WING (W1)

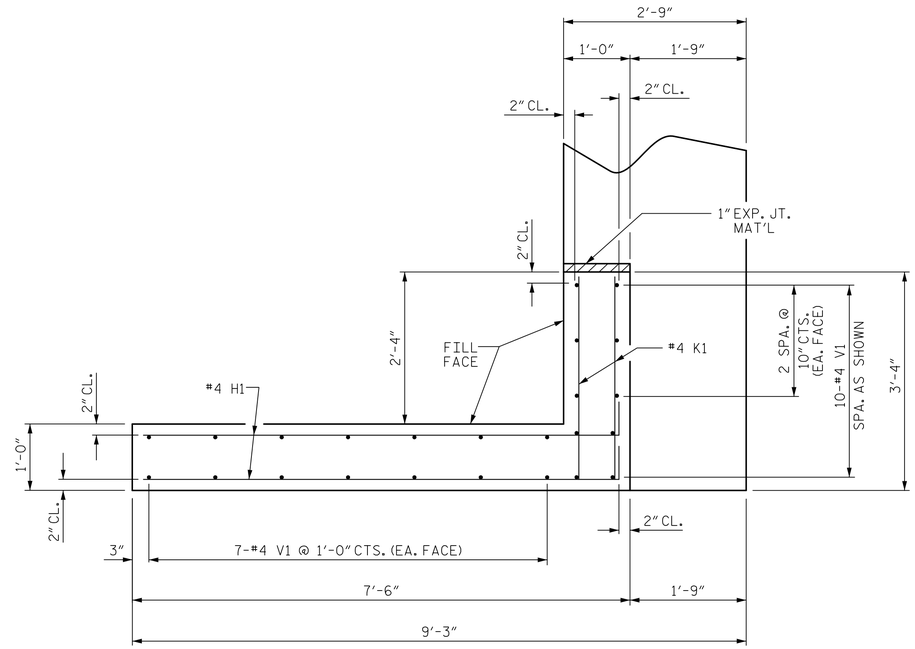

PLAN OF WING (W2)

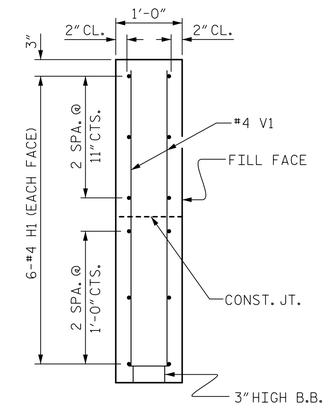

SECTION X-X

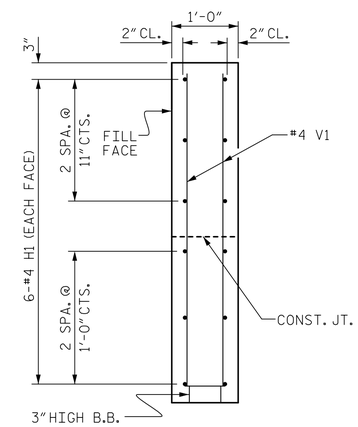

SECTION Y-Y

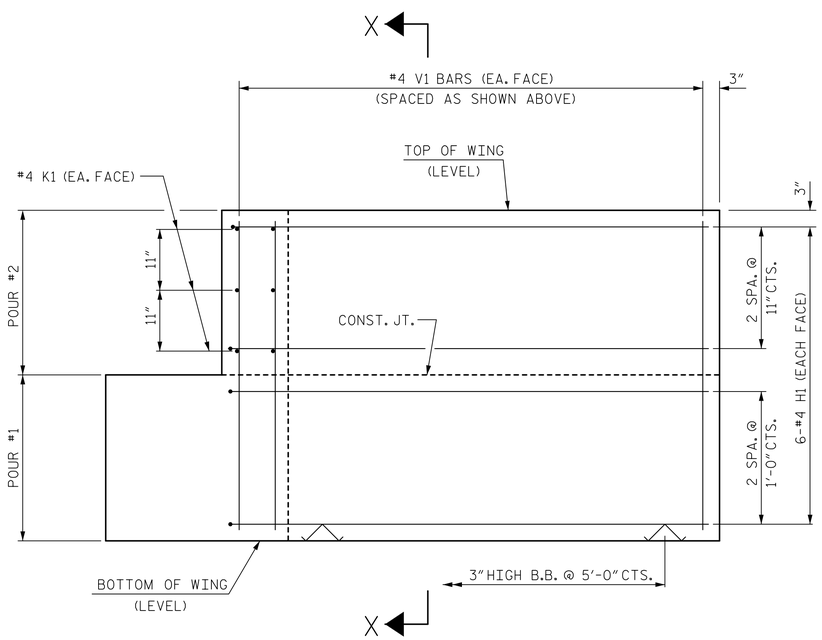

ELEVATION OF WING (W1)

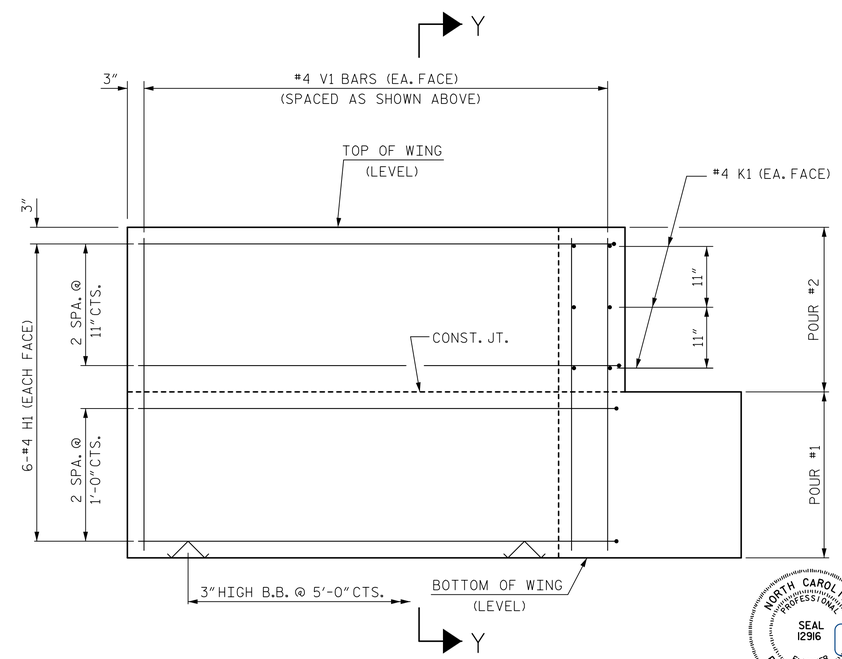

ELEVATION OF WING (W2)

WING DETAILS

PROJECT NO. BP3.R002

SAMPSON COUNTY

STATION: 13+92.00 -L-

SHEET 3 OF 4

NORTH CAROLINA PROFESSIONAL SEAL 12916 ENGINEER PAUL J. BARBER

DocuSigned by: Paul J. Barber 4/29/2022

STATE OF NORTH CAROLINA
DEPARTMENT OF TRANSPORTATION
RALEIGH

SUBSTRUCTURE

END BENT
WING DETAILS

ASSEMBLED BY : BJA	DATE : 1/22		
CHECKED BY : PJB	DATE : 2/22		
DRAWN BY : DGE 02/10	REV. 4/15	MAA/TMG	
CHECKED BY : MKT 02/10			

DOCUMENT NOT CONSIDERED FINAL UNLESS ALL SIGNATURES COMPLETED

HNTB

HNTB NORTH CAROLINA, P.C.
NC License No. C-1554
343 E. Six Forks Rd., Suite 200, Raleigh, N.C. 27609

DRAWN BY	M. WRIGHT	B. ALSTON	DATE 1/22
CHECKED BY		P. BARBER	DATE 2/22
DESIGN ENGINEER OF RECORD		P. BARBER	DATE 2/22

DWG. NO. 14

REVISIONS						SHEET NO.
NO.	BY	DATE	NO.	BY	DATE	S-14
1			3			TOTAL SHEETS
2			4			19

STD. NO. EB_33_90S

4/29/2022
1:06:35 AM
_\401_0021_BP3.R002_SMU_E03_014_B10297.dgn

DocuSign Envelope ID: 3D5F064D-D375-4105-8AA2-B7474C92A929

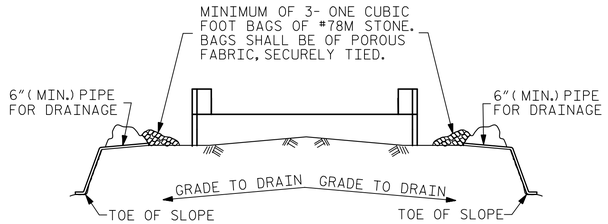

BAGGED STONE AND PIPE SHALL BE PLACED IMMEDIATELY AFTER COMPLETION OF END BENT EXCAVATION. PIPE MAY BE EITHER CONCRETE, CORRUGATED STEEL, CORRUGATED ALUMINUM ALLOY, OR CORRUGATED PLASTIC. PERFORATED PIPE WILL NOT BE ALLOWED.

BAGGED STONE SHALL REMAIN IN PLACE UNTIL THE ENGINEER DIRECTS THAT IT BE REMOVED. THE CONTRACTOR SHALL REMOVE AND DISPOSE OF SILT ACCUMULATIONS AT BAGGED STONE WHEN SO DIRECTED BY THE ENGINEER. BAGS SHALL BE REMOVED AND REPLACED WHENEVER THE ENGINEER DETERMINES THAT THEY HAVE DETERIORATED AND LOST THEIR EFFECTIVENESS.

NO SEPARATE PAYMENT WILL BE MADE FOR THIS WORK AND THE ENTIRE COST OF THIS WORK SHALL BE INCLUDED IN THE UNIT CONTRACT PRICE BID FOR THE SEVERAL PAY ITEMS.

TEMPORARY DRAINAGE AT END BENT

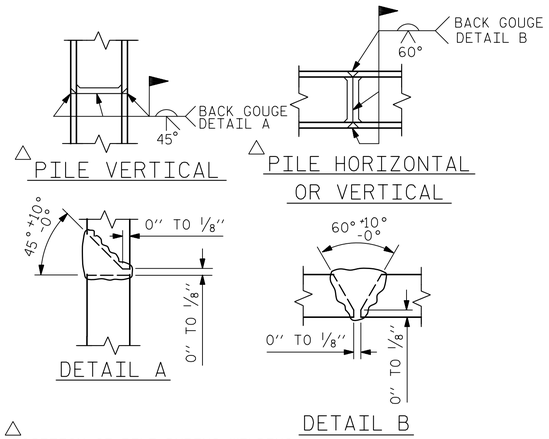

△ POSITION OF PILE DURING WELDING.

PILE SPLICE DETAILS

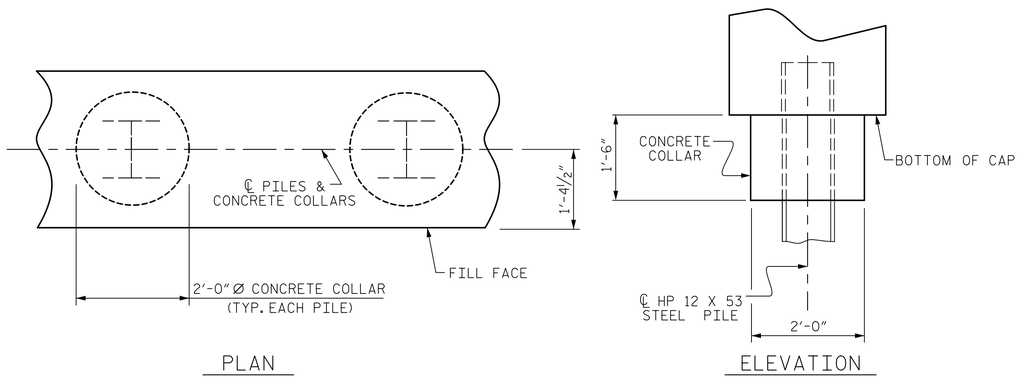

CORROSION PROTECTION FOR STEEL PILES DETAIL

(END BENT No. 1 SHOWN, END BENT No. 2 SIMILAR BY ROTATION)

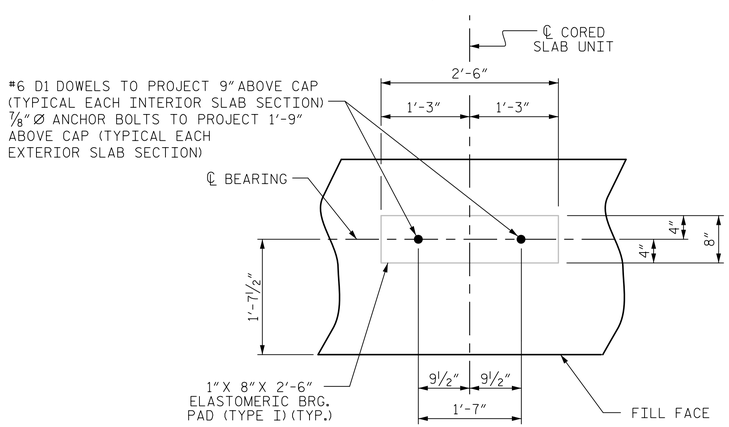

DETAIL "A"

(END BENT No. 1 SHOWN, END BENT No. 2 SIMILAR BY ROTATION)

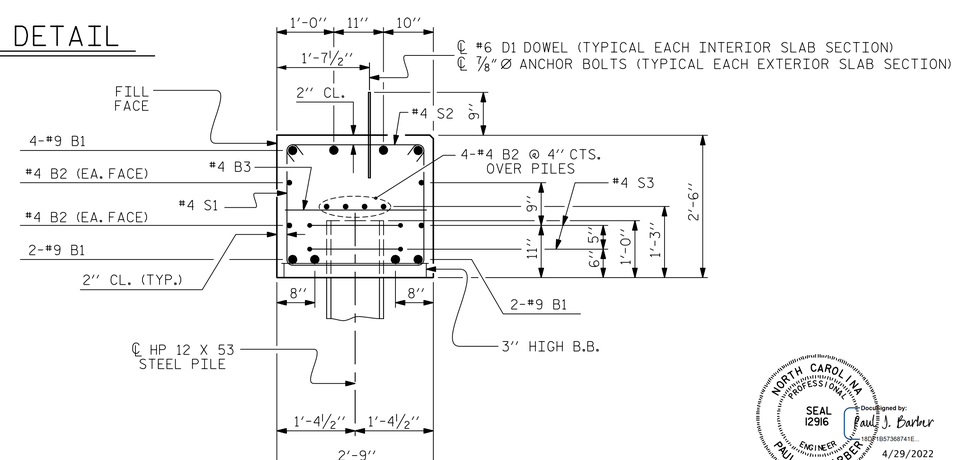

SECTION A-A

(CONCRETE COLLAR NOT SHOWN FOR CLARITY. SEE "CORROSION PROTECTION FOR STEEL PILES DETAIL.")

BAR TYPES

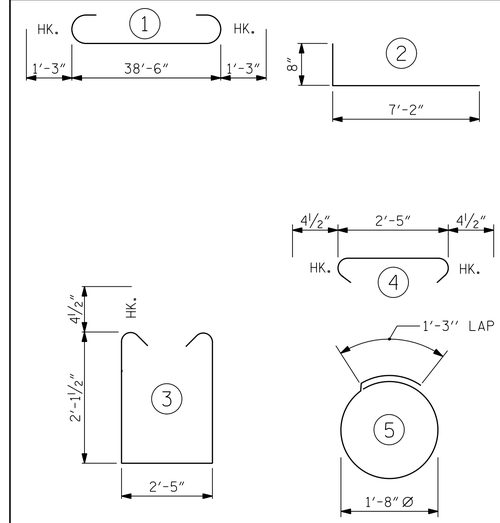

ALL BAR DIMENSIONS ARE OUT TO OUT.

BILL OF MATERIAL

FOR ONE END BENT

BAR	NO.	SIZE	TYPE	LENGTH	WEIGHT
B1	8	#9	1	41'-0"	1115
B2	16	#4	STR	20'-7"	220
B3	10	#4	STR	2'-5"	16
D1	18	#6	STR	1'-6"	41
H1	24	#4	2	7'-10"	126
K1	12	#4	STR	2'-11"	23
S1	50	#4	3	7'-5"	248
S2	50	#4	4	3'-2"	106
S3	14	#4	5	6'-6"	61
V1	48	#4	STR	4'-8"	150

REINFORCING STEEL (FOR ONE END BENT) 2106 LBS.

CLASS A CONCRETE BREAKDOWN (FOR ONE END BENT)

POUR #1 CAP, LOWER PART OF WINGS & COLLARS 12.4 C.Y.

POUR #2 UPPER PART OF WINGS 1.8 C.Y.

TOTAL CLASS A CONCRETE 14.2 C.Y.

PROJECT NO. BP3.R002

SAMPSON COUNTY

STATION: 13+92.00 -L-

SHEET 4 OF 4

STATE OF NORTH CAROLINA
DEPARTMENT OF TRANSPORTATION
RALEIGH

SUBSTRUCTURE

END BENT No. 1 & 2 DETAILS

NORTH CAROLINA PROFESSIONAL SEAL 12916 ENGINEER PAUL J. BARBER

DocuSigned by: Paul J. Barber 4/29/2022

HNTB NORTH CAROLINA, P.C.
NC License No. C-1554
343 E. Six Forks Rd., Suite 200, Raleigh, N.C. 27609

DRAWN BY M. WRIGHT B. ALSTON DATE 1/22
CHECKED BY P. BARBER DATE 2/22
DESIGN ENGINEER OF RECORD P. BARBER DATE 2/22

DWG. NO. 15

DOCUMENT NOT CONSIDERED FINAL UNLESS ALL SIGNATURES COMPLETED

REVISIONS						SHEET NO.
NO.	BY	DATE	NO.	BY	DATE	S-15
1			3			TOTAL SHEETS
2			4			19

ASSEMBLED BY : BJA DATE : 1/22
CHECKED BY : PJB DATE : 2/22
DRAWN BY : DGE 12/09
CHECKED BY : MKT 01/10
REV. 4/17 MAA/THC

4/29/2022 1:13:57 AM
...\407_005_BP3.R002_SMU_E04_015_B10297.dgn

STD. NO. EB_33_90S

DocuSign Envelope ID: 3D5F064D-D375-4105-8AA2-B7474C92A929

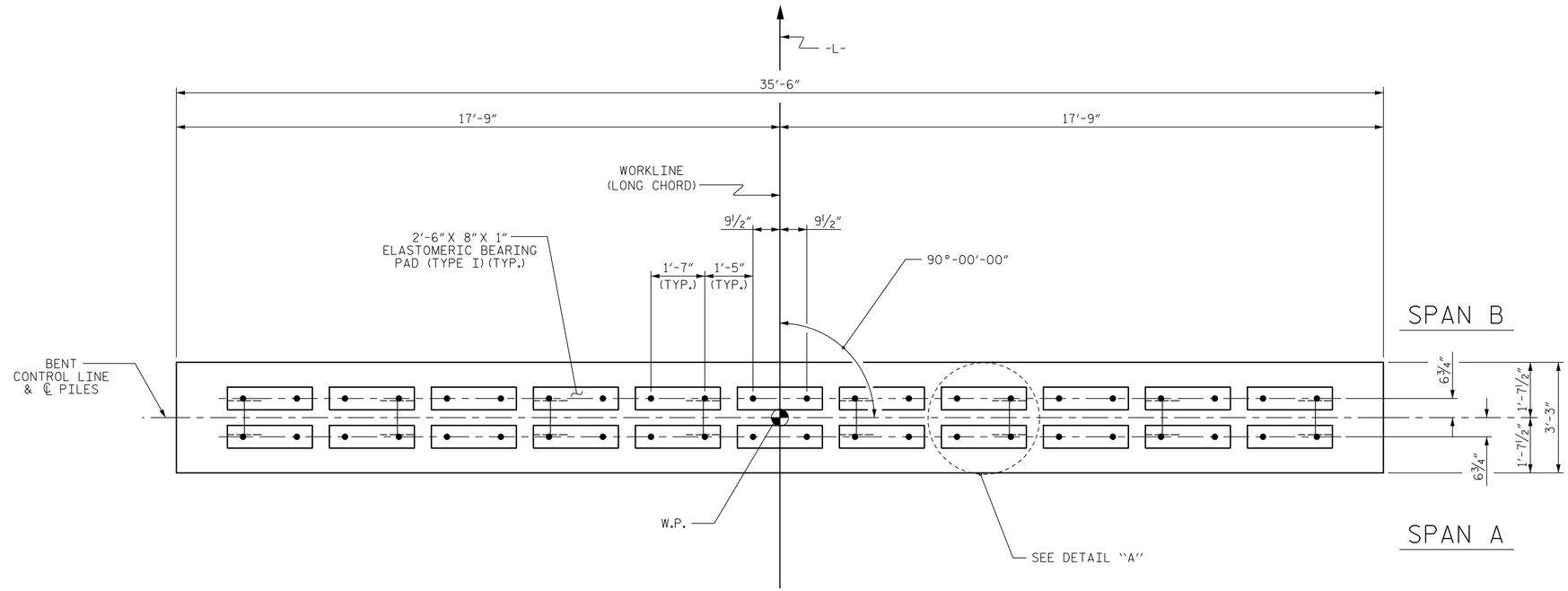

PLAN

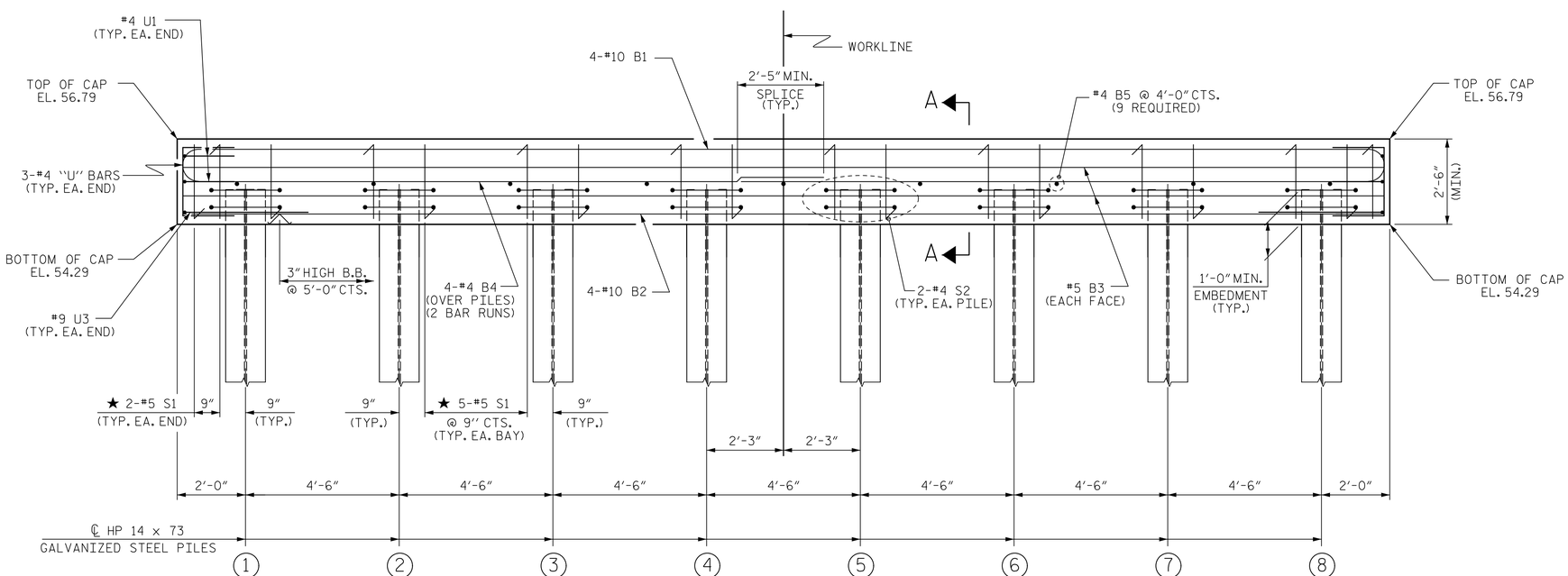

ELEVATION

FOR SECTION A-A, SEE SHEET 2 OF 2

NOTES

STIRRUPS IN CAP MAY BE SHIFTED AS NECESSARY TO CLEAR DOWELS.

★ INVERT ALTERNATE STIRRUPS.

GALVANIZE THE TOP OF EACH INTERIOR BENT PILE A MINIMUM OF 26 FEET. GALVANIZE IN ACCORDANCE WITH SECTION 1076 OF THE STANDARD SPECIFICATIONS.

ANCHOR BOLTS SHALL MEET THE REQUIREMENTS OF ASTM A449. ANCHOR PLATES, WASHERS, AND NUTS SHALL MEET THE REQUIREMENTS OF THE STANDARD SPECIFICATIONS. ANCHOR BOLTS, ANCHOR PLATES, WASHERS, AND NUTS SHALL BE GALVANIZED IN ACCORDANCE WITH THE STANDARD SPECIFICATIONS.

NO SEPARATE PAYMENT SHALL BE MADE FOR THE ANCHOR BOLTS, ANCHOR PLATES, WASHERS, AND NUTS. THE COST OF THE MATERIAL AND INSTALLATION SHALL BE CONSIDERED INCIDENTAL TO VARIOUS PAY ITEMS.

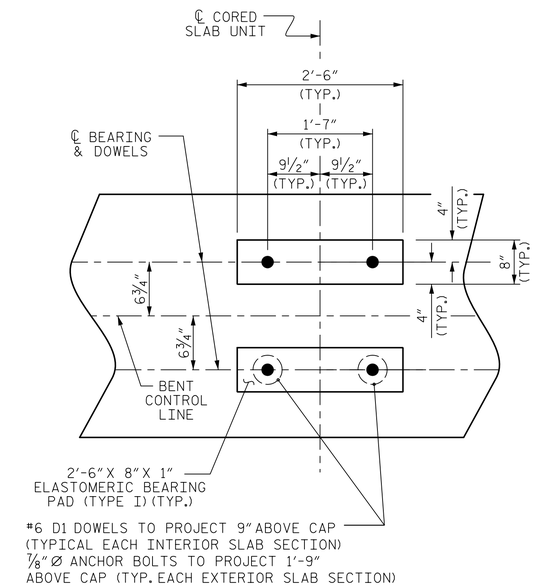

DETAIL "A"

(DIMENSIONS ARE TYPICAL EACH BEARING)

PROJECT NO. BP3.R002

SAMPSON COUNTY

STATION: 13+92.00 -L-

SHEET 1 OF 2

STATE OF NORTH CAROLINA
DEPARTMENT OF TRANSPORTATION
RALEIGH

SUBSTRUCTURE

BENT No. 1

NORTH CAROLINA PROFESSIONAL SEAL 12916 ENGINEER PAUL J. BARBER

DocuSigned by: Paul J. Barber 18D8B857368741E... 4/29/2022

REVISIONS						SHEET NO.
NO.	BY	DATE	NO.	BY	DATE	S-16
1			3			TOTAL SHEETS
2			4			19

HNTB

HNTB NORTH CAROLINA, P.C.
NC License No. C-1554
343 E. Six Forks Rd., Suite 200, Raleigh, N.C. 27609

DRAWN BY M. WRIGHT B. ALSTON DATE 1/22
CHECKED BY P. BARBER DATE 2/22
DESIGN ENGINEER OF RECORD P. BARBER DATE 2/22

DWG. NO. 16

DOCUMENT NOT CONSIDERED FINAL UNLESS ALL SIGNATURES COMPLETED

ASSEMBLED BY : BJA DATE : 1/22
CHECKED BY : PJB DATE : 2/22

DRAWN BY : DGE 05/10
CHECKED BY : MKT 05/10

REV. 6/17 MAA/THC

4/29/2022 1:27:21 AM
...\401_133_BP3R002_SMU_B01_D16_B10029f.dgn

STD. NO. 14" HP_BT_33_90S_<60'

DocuSign Envelope ID: 3D5F064D-D375-4105-8AA2-B7474C92A929

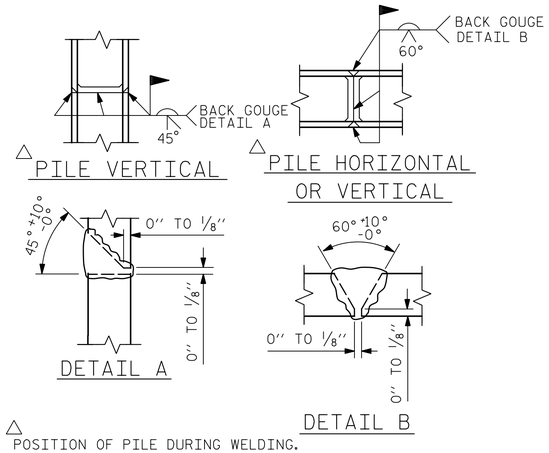

△ POSITION OF PILE DURING WELDING.

PILE SPLICE DETAILS

BAR TYPES

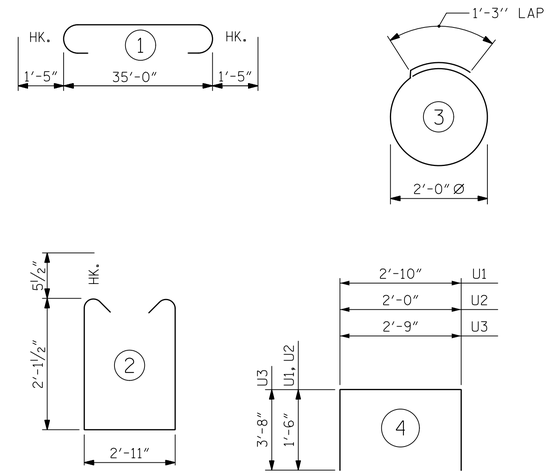

ALL BAR DIMENSIONS ARE OUT TO OUT.

BILL OF MATERIAL
FOR ONE BENT

BAR	NO.	SIZE	TYPE	LENGTH	WEIGHT
B1	4	#10	1	37'-10"	651
B2	4	#10	STR	35'-2"	605
B3	4	#5	STR	35'-2"	147
B4	8	#4	STR	18'-10"	101
B5	9	#4	STR	2'-11"	18
D1	36	#6	STR	1'-6"	81
S1	39	#5	2	8'-1"	329
S2	16	#4	3	7'-7"	81
U1	4	#4	4	5'-10"	16
U2	6	#4	4	5'-0"	20
U3	2	#9	4	10'-1"	69

REINFORCING STEEL (FOR ONE BENT) 2118 LBS

CLASS A CONCRETE BREAKDOWN (FOR ONE BENT)

TOTAL CLASS A CONCRETE 10.7 C.Y.

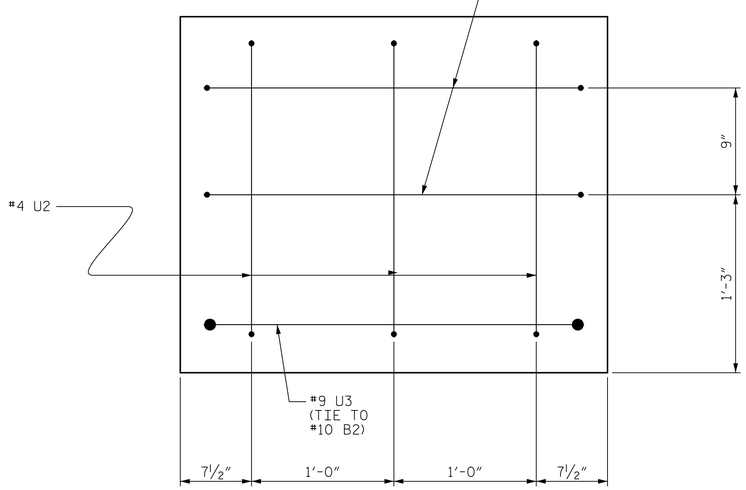

END OF CAP VIEW
(TYPICAL BOTH ENDS)

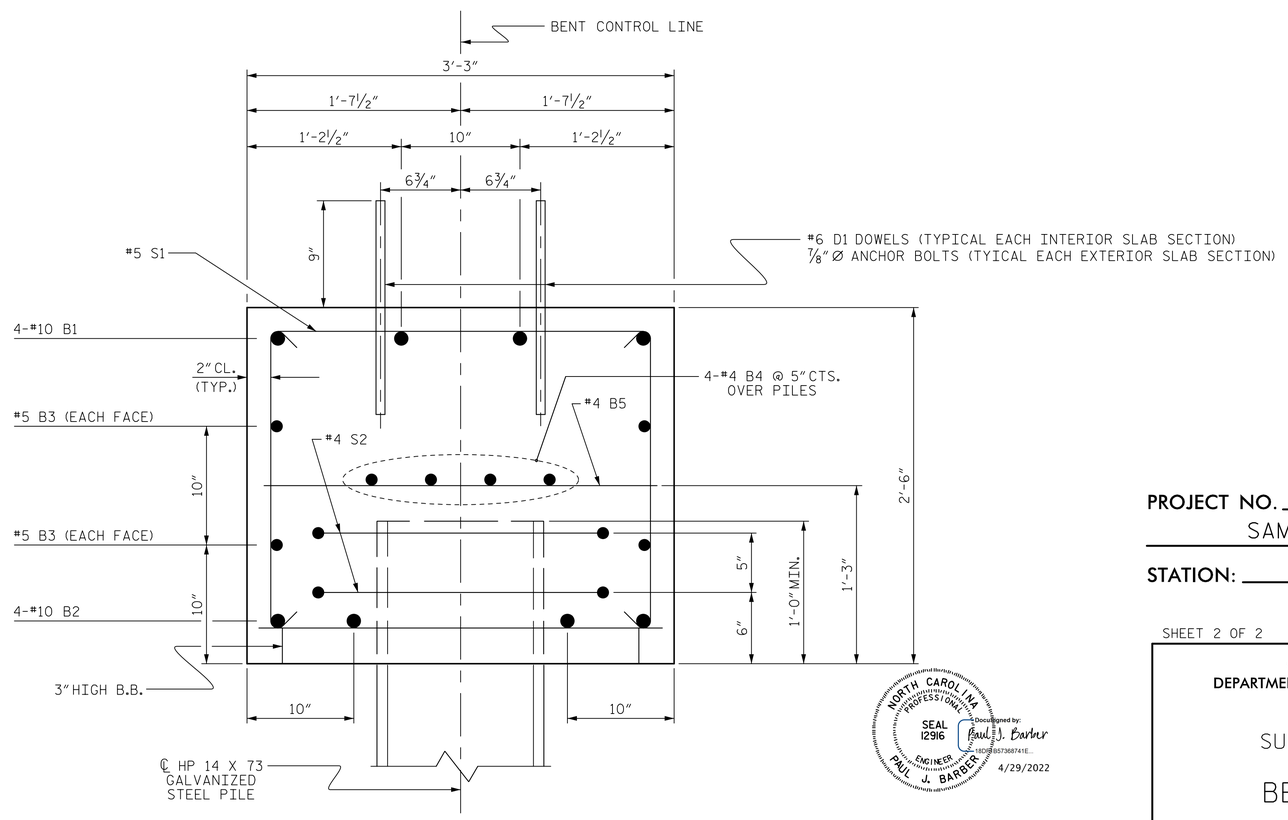

SECTION A-A

NORTH CAROLINA PROFESSIONAL SEAL 12916 ENGINEER PAUL J. BARBER
DocuSigned by: Paul J. Barber
4/29/2022

PROJECT NO. BP3.R002
SAMPSON COUNTY
STATION: 13+92.00 -L-

SHEET 2 OF 2

STATE OF NORTH CAROLINA
DEPARTMENT OF TRANSPORTATION
RALEIGH

SUBSTRUCTURE

BENT No. 1

REVISIONS						SHEET NO.
NO.	BY	DATE	NO.	BY	DATE	S-17
1			3			TOTAL SHEETS
2			4			19

HNTB
HNTB NORTH CAROLINA, P.C.
NC License No. C-1554
343 E. Six Forks Rd. Suite 200, Raleigh, N.C. 27609

DRAWN BY M. WRIGHT B. ALSTON DATE 1/22
CHECKED BY P. BARBER DATE 2/22
DESIGN ENGINEER OF RECORD P. BARBER DATE 2/22
DWG. NO. 17

ASSEMBLED BY : BJA DATE : 1/22
CHECKED BY : PJB DATE : 2/22

DRAWN BY : DGE 05/10
CHECKED BY : MKT 05/10
REV. 6/17 MAA/THC

DOCUMENT NOT CONSIDERED FINAL UNLESS ALL SIGNATURES COMPLETED

4/29/2022 11:06:54 AM
_MKT_033_BP3.R002_SMU_B02_017_B1029F.dgn

STD. NO. 14" HP_BT_33_90S_<60'

DocuSign Envelope ID: 3D5F064D-D375-4105-8AA2-B7474C92A929

NOTES :

FOR BERM WIDTH DIMENSIONS, SEE GENERAL DRAWING.

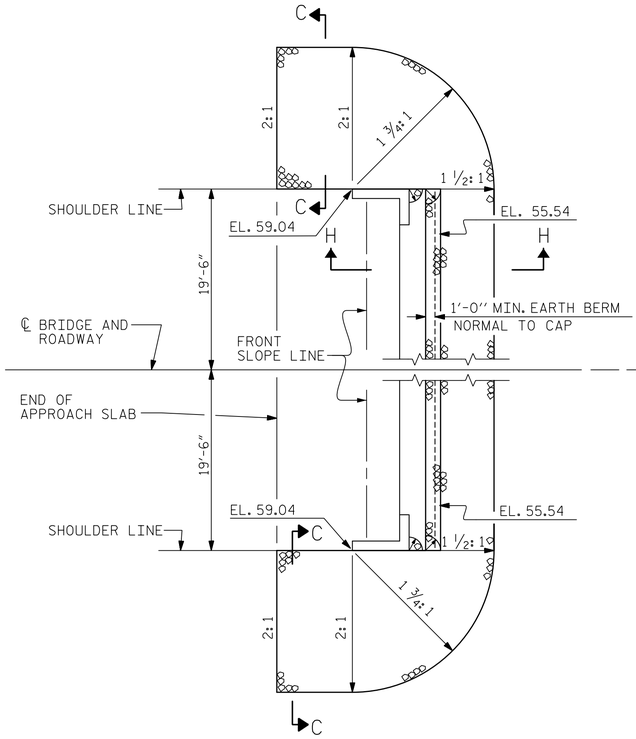

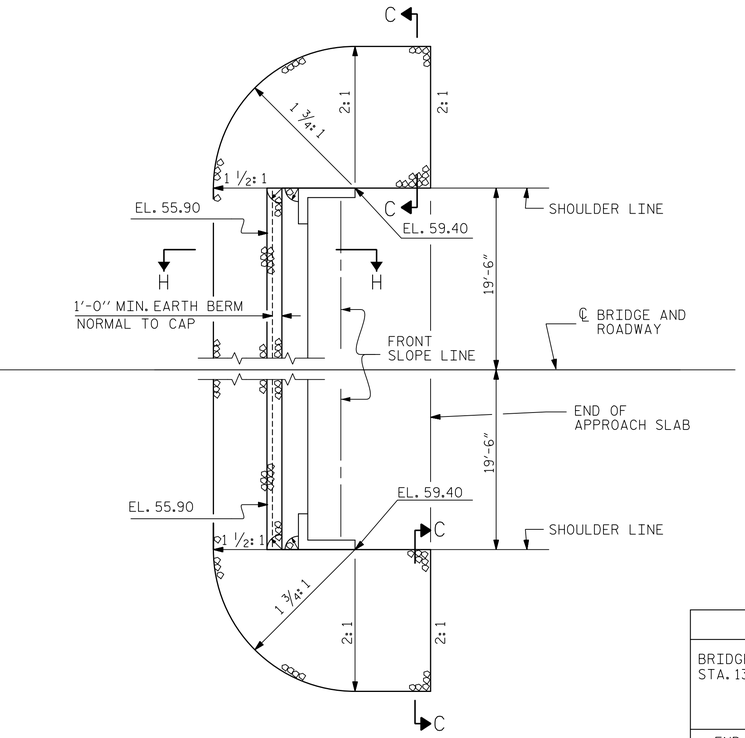

ESTIMATED QUANTITIES		
BRIDGE @ STA. 13+92.00 -L-	RIP RAP CLASS II (2'-0" THICK)	GEOTEXTILE FOR DRAINAGE
	TONS	SQUARE YARDS
END BENT 1	65	70
END BENT 2	70	80

SHOULDER RIP RAP IS HIGHER THAN BERM RIP RAP

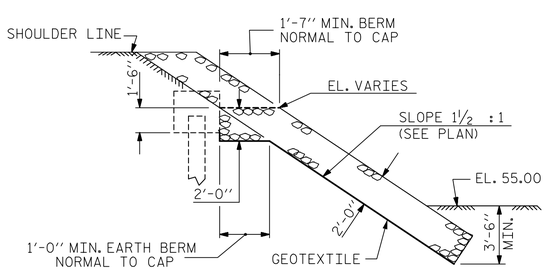

SECTION H-H

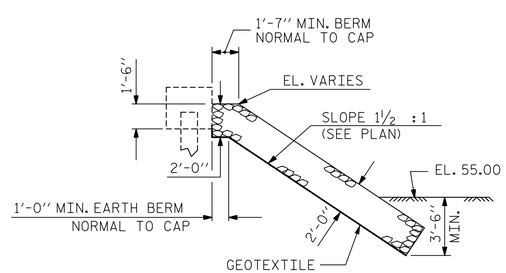

℄ SECTION

BERM RIP RAPPED

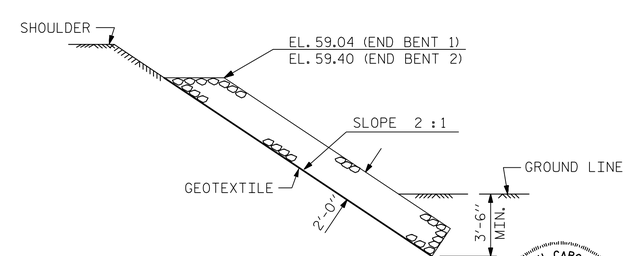

SECTION C-C

NORTH CAROLINA PROFESSIONAL SEAL 12916 ENGINEER PAUL J. BARBER
DocuSigned by: Paul J. Barber
4/29/2022

PROJECT NO. BP3.R002

SAMPSON COUNTY

STATION: 13+92.00 -L-

STATE OF NORTH CAROLINA
DEPARTMENT OF TRANSPORTATION
RALEIGH

STANDARD

RIP RAP DETAILS

ASSEMBLED BY : BJA	DATE : 1/22
CHECKED BY : PJB	DATE : 2/22
DRAWN BY : REK 1/84	REV. 10/1/11 MAA/GM
CHECKED BY : RDU 1/84	REV. 12/21/11 MAA/GM
	REV. 12/17 MAA/THC

DOCUMENT NOT CONSIDERED FINAL UNLESS ALL SIGNATURES COMPLETED

HNTB NORTH CAROLINA, P.C.
NC License No. C-1554
343 E. Six Forks Rd., Suite 200, Raleigh, N.C. 27609

DRAWN BY M. WRIGHT B. ALSTON DATE 1/22
CHECKED BY P. BARBER DATE 2/22
DESIGN ENGINEER OF RECORD P. BARBER DATE 2/22
DWG. NO. 18

REVISIONS						SHEET NO.
NO.	BY	DATE	NO.	BY	DATE	S-18
1			3			TOTAL SHEETS
2			4			19

STD. NO. RR1 (Sht 2)

4/29/2022 11:07:00 AM
_MOT_035_BP3.R002_SMU_RR_018_B1029T.dgn

DocuSign Envelope ID: E48ECCF3-505C-4482-B803-BEE6F78B83A7

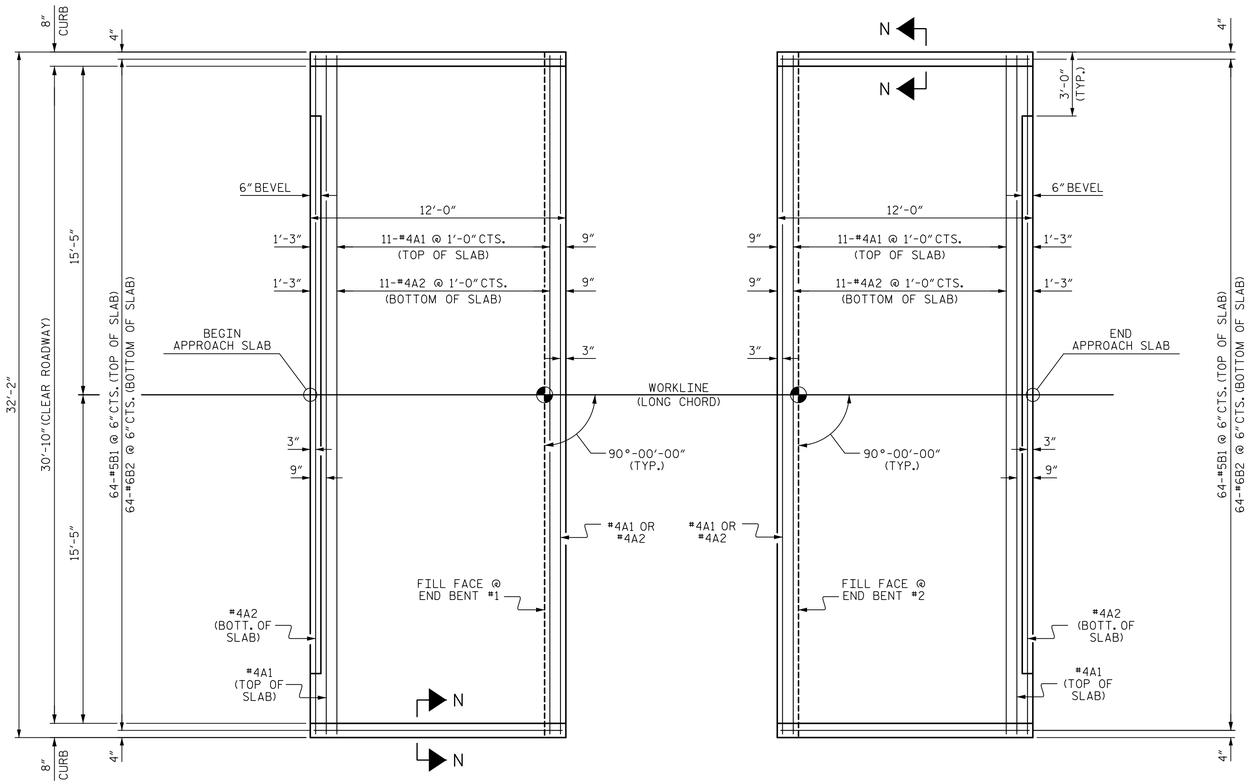

PLAN @ END BENT #1

PLAN @ END BENT #2

DIMENSIONS SHOWN ARE TYPICAL FOR BOTH APPROACH SLABS

NOTES

FOR BRIDGE APPROACH FILL INCLUDING GEOTEXTILE, 4"Ø DRAINAGE PIPE, AND SELECT MATERIAL BACKFILL, SEE ROADWAY PLANS.

GEOTEXTILE SHALL BE TYPE 1 IN ACCORDANCE WITH THE STANDARD SPECIFICATIONS SECTION 1056.

SELECT MATERIAL BACKFILL (CLASS V OR CLASS VI) SHALL BE IN ACCORDANCE WITH STANDARD SPECIFICATIONS SECTION 1016.

SELECT MATERIAL BACKFILL IS TO BE CONTINUOUS ALONG FILL FACE OF BACKWALL FROM OUTSIDE EDGE TO OUTSIDE EDGE OF APPROACH SLAB.

FOR THE 4"Ø DRAINAGE PIPE OUTLET(S), SEE ROADWAY STANDARD DRAWINGS.

AREA BETWEEN THE WINGWALL AND APPROACH SLAB SHALL BE GRADED TO DRAIN THE WATER AWAY FROM THE FILL FACE OF THE BRIDGE AND SHALL BE PAVED. SEE ROADWAY PLANS.

THE CONTRACTOR SHALL ADD A SINGLE LAYER OF TYPE 4 OR TYPE 5 GEOTEXTILE ONE FOOT BELOW THE APPROACH SLAB FOR THE FULL WIDTH OF THE APPROACH FILL. COST OF GEOTEXTILE SHALL BE CONSIDERED INCIDENTAL.

APPROACH SLAB GROOVING IS NOT REQUIRED.

BILL OF MATERIAL

APPROACH SLAB AT EB #1

BAR	NO.	SIZE	TYPE	LENGTH	WEIGHT
* A1	13	#4	STR	31'-10"	276
A2	13	#4	STR	31'-10"	276
* B1	64	#5	STR	11'-2"	745
B2	64	#6	STR	11'-8"	1121
REINFORCING STEEL				LBS.	1397
* EPOXY COATED REINFORCING STEEL				LBS.	1021
CLASS AA CONCRETE				C. Y.	18.4

APPROACH SLAB AT EB #2

BAR	NO.	SIZE	TYPE	LENGTH	WEIGHT
* A1	13	#4	STR	31'-10"	276
A2	13	#4	STR	31'-10"	276
* B1	64	#5	STR	11'-2"	745
B2	64	#6	STR	11'-8"	1121
REINFORCING STEEL				LBS.	1397
* EPOXY COATED REINFORCING STEEL				LBS.	1021
CLASS AA CONCRETE				C. Y.	18.4

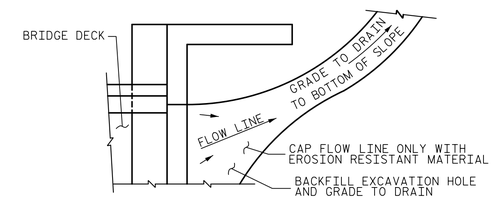

NOTE: IF THE APPROACH SLAB IS NOT CONSTRUCTED IMMEDIATELY AFTER THE BACKFILLING OF THE END BENT EXCAVATION, GRADE TO DRAIN TO THE BOTTOM OF THE SLOPE AND PROVIDE EROSION RESISTANT MATERIAL, SUCH AS FIBERGLASS ROVING OR AS DIRECTED BY THE ENGINEER TO PREVENT SOIL EROSION AND TO PROTECT THE AREA ADJACENT TO THE STRUCTURE. THE CONTRACTOR WILL BE REQUIRED TO REMOVE THESE MATERIALS PRIOR TO CONSTRUCTION OF THE APPROACH SLAB.

TEMPORARY DRAINAGE DETAIL

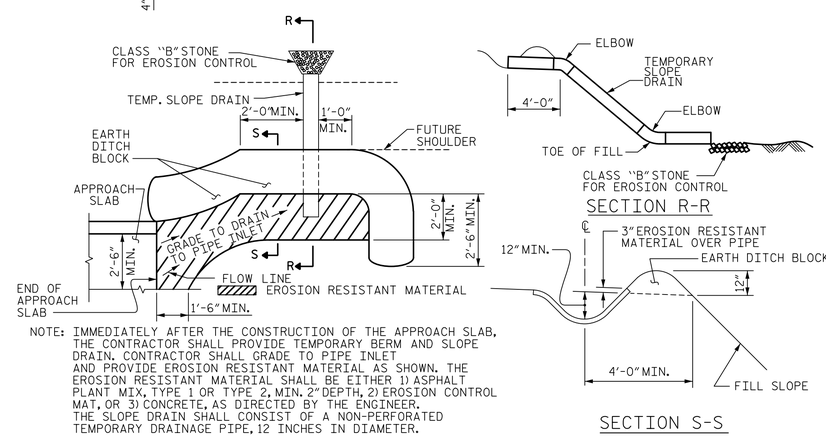

NOTE: IMMEDIATELY AFTER THE CONSTRUCTION OF THE APPROACH SLAB, THE CONTRACTOR SHALL PROVIDE TEMPORARY BERM AND SLOPE DRAIN. CONTRACTOR SHALL GRADE TO PIPE INLET AND PROVIDE EROSION RESISTANT MATERIAL AS SHOWN. THE EROSION RESISTANT MATERIAL SHALL BE EITHER 1) ASPHALT PLANT MIX, TYPE 1 OR TYPE 2, MIN. 2" DEPTH, 2) EROSION CONTROL MAT, OR 3) CONCRETE, AS DIRECTED BY THE ENGINEER. THE SLOPE DRAIN SHALL CONSIST OF A NON-PERFORATED TEMPORARY DRAINAGE PIPE, 12 INCHES IN DIAMETER.

PLAN VIEW

SECTION R-R

SECTION S-S

TEMPORARY BERM AND SLOPE DRAIN DETAILS

(TO BE USED WHEN SHOULDER BERM GUTTER IS REQUIRED)

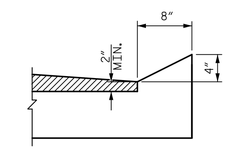

SECTION N-N

CURB DETAILS

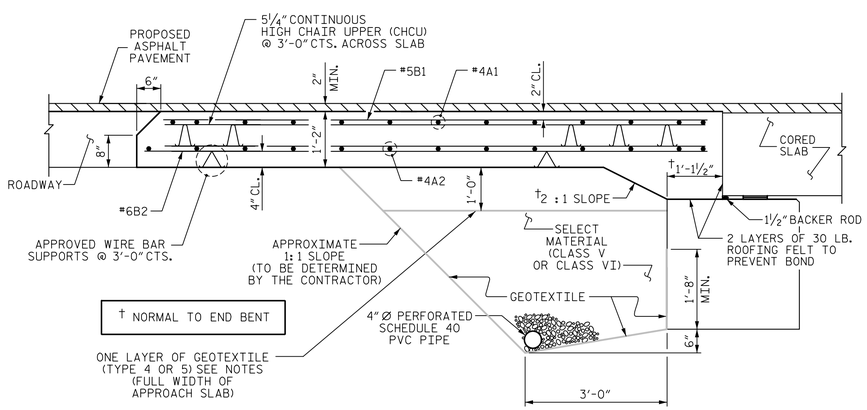

† NORMAL TO END BENT

SECTION THRU SLAB

(TYPE II - MODIFIED APPROACH FILL)

SPLICE LENGTHS		
BAR SIZE	EPOXY COATED	UNCOATED
#4	1'-11"	1'-7"
#5	2'-5"	2'-0"
#6	3'-7"	2'-5"

PROJECT NO. BP3.R002

SAMPSON COUNTY

STATION: 13+92.00 -L-

NORTH CAROLINA PROFESSIONAL SEAL 12916 ENGINEER PAUL J. BARBER

DocuSigned by: Paul J. Barber 18E918573687416...

5/12/2022

STATE OF NORTH CAROLINA
DEPARTMENT OF TRANSPORTATION
RALEIGH

STANDARD
BRIDGE APPROACH SLAB
FOR PRESTRESSED CONCRETE
CORED SLAB UNIT
(SUB-REGIONAL TIER)
90° SKEW

ASSEMBLED BY : BJA	DATE : 1/22	
CHECKED BY : PJB	DATE : 1/22	
DRAWN BY : SHS/MAA 5-09	REV. 12-17	MAA/THC
CHECKED BY : BCH 5-09	REV. 08-19	BNB/THC

DOCUMENT NOT CONSIDERED FINAL UNLESS ALL SIGNATURES COMPLETED

HNTB NORTH CAROLINA, P.C.
NC License No. C-1554
343 E. Six Forks Rd., Suite 200, Raleigh, N.C. 27609

DRAWN BY	B. ALSTON	DATE	5/22
CHECKED BY	P. BARBER	DATE	5/22
DESIGN ENGINEER OF RECORD	P. BARBER	DATE	5/22

DWG. NO. 19

REVISIONS						SHEET NO.
NO.	BY	DATE	NO.	BY	DATE	S-19
1			3			TOTAL SHEETS
2			4			19

STD. NO. BAS_33_90S

5/12/2022 3:25:08 PM
...\401_037_BP3.R002_SMU_AS_019_B1029T.dgn

DocuSign Envelope ID: 3D5F064D-D375-4105-8AA2-B7474C92A929

STANDARD NOTES

DESIGN DATA:

SPECIFICATIONS - - - - - - - - - - - - - - - - -	A.A.S.H.T.O. (CURRENT)
LIVE LOAD -	SEE PLANS
IMPACT ALLOWANCE - - - - - - - - - - - - - - - -	SEE A.A.S.H.T.O.
STRESS IN EXTREME FIBER OF STRUCTURAL STEEL - AASHTO M270 GRADE 36 - -	20,000 LBS. PER SQ. IN.
- AASHTO M270 GRADE 50W - -	27,000 LBS. PER SQ. IN.
- AASHTO M270 GRADE 50 - -	27,000 LBS. PER SQ. IN.
REINFORCING STEEL IN TENSION - GRADE 60 - - -	24,000 LBS. PER SQ. IN.
CONCRETE IN COMPRESSION - - - - - - - - - - - -	1,200 LBS. PER SQ. IN.
CONCRETE IN SHEAR - - - - - - - - - - - - - - - -	SEE A.A.S.H.T.O.
STRUCTURAL TIMBER - TREATED OR UNTREATED EXTREME FIBER STRESS - - -	1,800 LBS. PER SQ. IN.
COMPRESSION PERPENDICULAR TO GRAIN OF TIMBER - - - - -	375 LBS. PER SQ. IN.
EQUIVALENT FLUID PRESSURE OF EARTH - - - - -	30 LBS. PER CU. FT. (MINIMUM)

MATERIAL AND WORKMANSHIP:

EXCEPT AS MAY OTHERWISE BE SPECIFIED ON PLANS OR IN THE SPECIAL PROVISIONS, ALL MATERIAL AND WORKMANSHIP SHALL BE IN ACCORDANCE WITH THE 2018 "STANDARD SPECIFICATIONS FOR ROADS AND STRUCTURES" OF THE N. C. DEPARTMENT OF TRANSPORTATION.

STEEL SHEET PILING FOR PERMANENT OR TEMPORARY APPLICATIONS SHALL BE HOT ROLLED.

CONCRETE:

UNLESS OTHERWISE REQUIRED ON PLANS, CLASS A CONCRETE SHALL BE USED FOR ALL PORTIONS OF ALL STRUCTURES WITH THE EXCEPTION THAT: CLASS AA CONCRETE SHALL BE USED IN BRIDGE SUPERSTRUCTURES, ABUTMENT BACKWALLS, AND APPROACH SLABS; AND CLASS B CONCRETE SHALL BE USED FOR SLOPE PROTECTION AND RIP RAP.

CONCRETE CHAMFERS:

UNLESS OTHERWISE NOTED ON THE PLANS, ALL EXPOSED CORNERS ON STRUCTURES SHALL BE CHAMFERED ¾" WITH THE FOLLOWING EXCEPTIONS: TOP CORNERS OF CURBS MAY BE ROUNDED TO 1½" RADIUS WHICH IS BUILT INTO CURB FORMS; CORNERS OF TRANSVERSE FLOOR EXPANSION JOINTS SHALL BE ROUNDED WITH A ¼" FINISHING TOOL UNLESS OTHERWISE REQUIRED ON PLANS; AND CORNERS OF EXPANSION JOINTS IN THE ROADWAY FACES AND TOPS OF CURBS AND SIDEWALKS SHALL BE ROUNDED TO A ¼" RADIUS WITH A FINISHING STONE OR TOOL UNLESS OTHERWISE REQUIRED ON PLANS.

DOWELS:

DOWELS WHEN INDICATED ON PLANS AS FOR CULVERT EXTENSIONS, SHALL BE EMBEDDED AT LEAST 12" INTO THE OLD CONCRETE AND GROUTED INTO PLACE WITH 1:2 CEMENT MORTAR.

ALLOWANCE FOR DEAD LOAD DEFLECTION, SETTLEMENT, ETC. IN CASTING SUPERSTRUCTURES:

BRIDGES SHALL BE BUILT ON THE GRADE OR VERTICAL CURVE SHOWN ON PLANS. SLABS, CURBS AND PARAPETS SHALL CONFORM TO THE GRADE OR CURVE.

ALL DIMENSIONS WHICH ARE GIVEN IN SECTION AND ARE AFFECTED BY DEAD LOAD DEFLECTIONS ARE DIMENSIONS AT CENTER LINE OF BEARING UNLESS OTHERWISE NOTED ON PLANS. IN SETTING FORMS FOR STEEL BEAM BRIDGES AND PRESTRESSED CONCRETE GIRDER BRIDGES, ADJUSTMENTS SHALL BE MADE DUE TO THE DEAD LOAD DEFLECTIONS FOR THE ELEVATIONS SHOWN. WHERE BLOCKS ARE SHOWN OVER BEAMS FOR BUILDING UP TO THE SLAB, THE VERTICAL DIMENSIONS OF THE BLOCKS SHALL BE ADJUSTED BETWEEN BEARINGS TO COMPENSATE FOR DEAD LOAD DEFLECTIONS, VERTICAL CURVE ORDINATE, AND ACTUAL BEAM CAMBER. WHERE BOTTOM OF SLAB IS IN LINE WITH BOTTOM OF TOP FLANGES, DEPTH OF SLAB BETWEEN BEARINGS SHALL BE ADJUSTED TO COMPENSATE FOR DEAD LOAD DEFLECTION, VERTICAL CURVE ORDINATE, AND ACTUAL BEAM CAMBER.

IN SETTING FALSEWORK AND FORMS FOR REINFORCED CONCRETE SPANS, AN ALLOWANCE SHALL BE MADE FOR DEAD LOAD DEFLECTIONS, SETTLEMENT OF FALSEWORK, AND PERMANENT CAMBER WHICH SHALL BE PROVIDED FOR IN ADDITION TO THE ELEVATIONS SHOWN. AFTER REMOVAL OF THE FALSEWORK, THE FINISHED STRUCTURES SHALL CONFORM TO THE PROFILE AND ELEVATIONS SHOWN ON THE PLANS AND CONSTRUCTION ELEVATIONS FURNISHED BY THE ENGINEER.

DETAILED DRAWINGS FOR FALSEWORK OR FORMS FOR BRIDGE SUPERSTRUCTURE AND ANY STRUCTURE OR PARTS OF A STRUCTURE AS NOTED ON THE PLANS SHALL BE SUBMITTED TO THE ENGINEER FOR APPROVAL BEFORE CONSTRUCTION OF THE FALSEWORK OR FORMS IS STARTED.

REINFORCING STEEL:

ALL REINFORCING STEEL SHALL BE DEFORMED. DIMENSIONS RELATIVE TO PLACEMENT OF REINFORCING ARE TO CENTERS OF BARS UNLESS OTHERWISE INDICATED IN THE PLANS. DIMENSIONS ON BAR DETAILS ARE TO CENTERS OF BARS OR ARE OUT TO OUT AS INDICATED ON PLANS.

WIRE BAR SUPPORTS SHALL BE PROVIDED FOR REINFORCING STEEL WHERE INDICATED ON THE PLANS. WHEN BAR SUPPORT PIECES ARE PLACED IN CONTINUOUS LINES, THEY SHALL BE SO PLACED THAT THE ENDS OF THE SUPPORTING WIRES SHALL BE LAPPED TO LOCK LEGS ON ADJOINING PIECES.

STRUCTURAL STEEL:

AT THE CONTRACTOR'S OPTION, HE MAY SUBSTITUTE ⅞" Ø SHEAR STUDS FOR THE ¾" Ø STUDS SPECIFIED ON THE PLANS. THIS SUBSTITUTION SHALL BE MADE AT THE RATE OF 3 - ⅞" Ø STUDS FOR 4 - ¾" Ø STUDS, AND STUD SPACING CHANGES SHALL BE MADE AS NECESSARY TO PROVIDE THE SAME EQUIVALENT NUMBER OF ⅞" Ø STUDS ALONG THE BEAM AS SHOWN FOR ¾" Ø STUDS BASED ON THE RATIO OF 3 - ⅞" Ø STUDS FOR 4 - ¾" Ø STUDS. STUDS OF THE LENGTH SPECIFIED ON THE PLANS MUST BE PROVIDED. THE MAXIMUM SPACING SHALL BE 2'-0".

EXCEPT AT THE INTERIOR SUPPORTS OF CONTINUOUS BEAMS WHERE THE COVER PLATE IS IN CONTACT WITH BEARING PLATE, THE CONTRACTOR MAY, AT HIS OPTION, SUBSTITUTE FOR THE COVER PLATES DESIGNATED ON THE PLANS COVER PLATES OF THE EQUIVALENT AREA PROVIDED THESE PLATES ARE AT LEAST 5/16" IN THICKNESS AND DO NOT EXCEED A WIDTH EQUAL TO THE FLANGE WIDTH LESS 2" OR A THICKNESS EQUAL TO 2 TIMES THE FLANGE THICKNESS. THE SIZE OF FILLET WELDS SHALL CONFORM TO THE REQUIREMENTS OF THE CURRENT ANSI/AASHTO/AWS "BRIDGE WELDING CODE". ELECTROSLAG WELDING WILL NOT BE PERMITTED.

WITH THE SOLE EXCEPTION OF EDGES AT SURFACES WHICH BEAR ON OTHER SURFACES, ALL SHARP EDGES AND ENDS OF SHAPES AND PLATES SHALL BE SLIGHTLY ROUNDED BY SUITABLE MEANS TO A RADIUS OF APPROXIMATELY 1/16 INCH OR EQUIVALENT FLAT SURFACE AT A SUITABLE ANGLE PRIOR TO PAINTING, GALVANIZING, OR METALLIZING.

HANDRAILS AND POSTS:

METAL STANDARDS AND FACES OF THE CONCRETE END POSTS FOR THE METAL RAIL SHALL BE SET NORMAL TO THE GRADE OF THE CURB, UNLESS OTHERWISE SHOWN ON PLANS. THE METAL RAIL AND TOPS OF CONCRETE POSTS USED WITH THE ALUMINUM RAIL SHALL BE BUILT PARALLEL TO THE GRADE OF THE CURB.

METAL HANDRAILS SHALL BE IN ACCORDANCE WITH THE PLANS. RAILS SHALL BE AS MANUFACTURED FOR BRIDGE RAILING. CASTINGS SHALL BE OF A UNIFORM APPEARANCE. FINS AND OTHER DEFORMATIONS RESULTING FROM CASTING OR OTHERWISE SHALL BE REMOVED IN A MANNER SO THAT A UNIFORM COLORING OF THE COMPLETED CASTING SHALL BE OBTAINED. CASTINGS WITH DISCOLORATIONS OR OF NON-UNIFORM COLORING WILL NOT BE ACCEPTED. CERTIFIED MILL REPORTS ARE REQUIRED FOR METAL RAILS AND POSTS.

SPECIAL NOTES:

GENERALLY, IN CASE OF DISCREPANCY, THIS STANDARD SHEET OF NOTES SHALL GOVERN OVER THE SPECIFICATIONS, BUT THE REMAINDER OF THE PLANS SHALL GOVERN OVER NOTES HEREON, AND SPECIAL PROVISIONS SHALL GOVERN OVER ALL. SEE SPECIFICATIONS ARTICLE 105-4.

ENGLISH

JANUARY, 1990