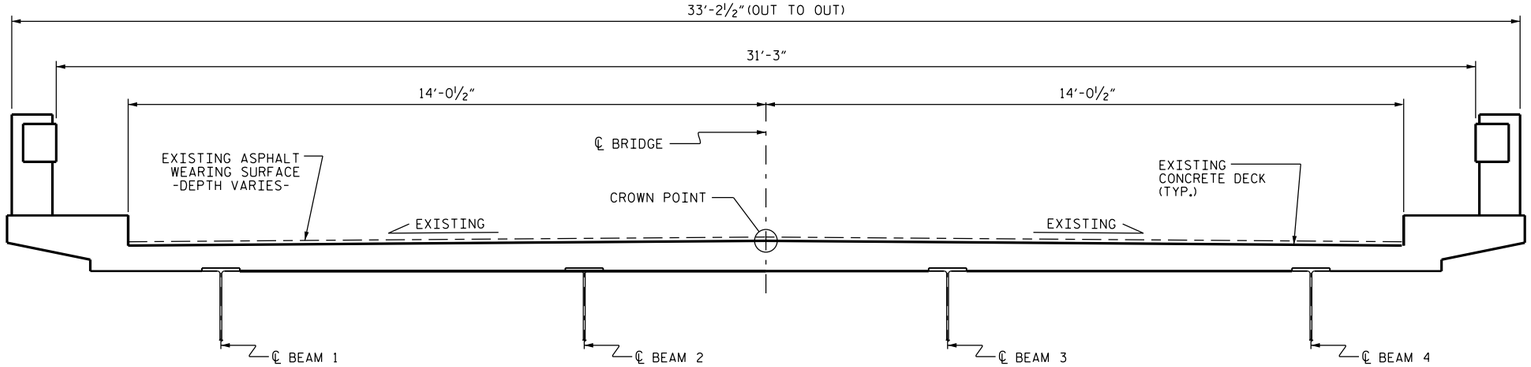

TYPICAL SECTION

(EXISTING)(LOOKING EAST)

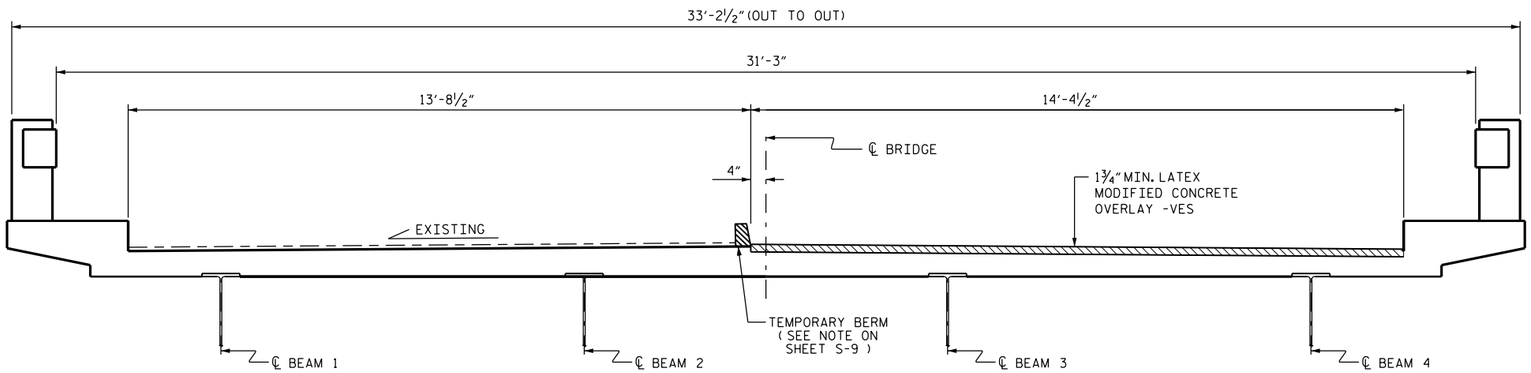

TYPICAL SECTION

(RIGHT LANE WORK ZONE)(LOOKING EAST)

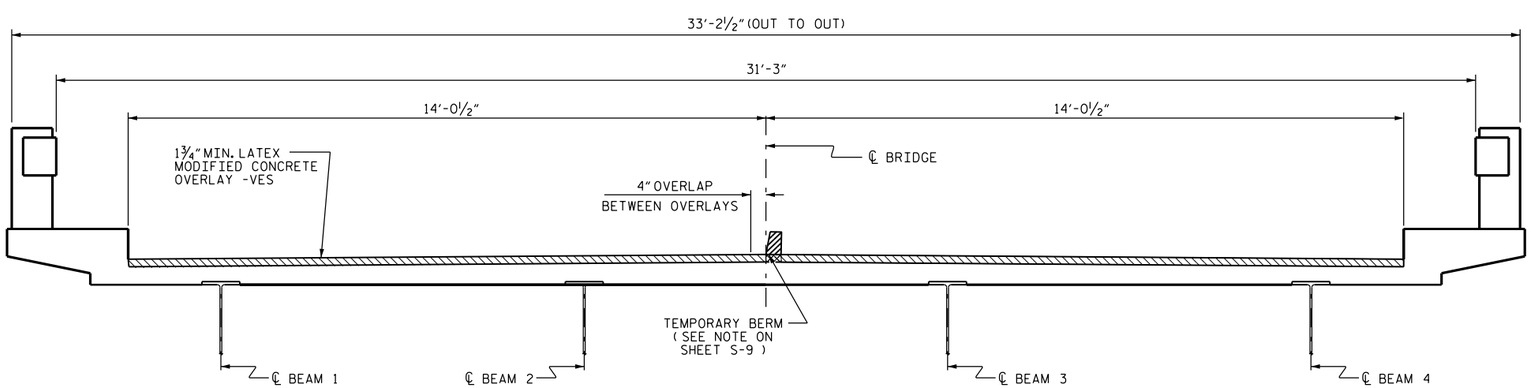

TYPICAL SECTION

(LEFT LANE WORK ZONE)(LOOKING EAST)

NOTES:

THE WORK STAGING ON THIS PLAN SHEET INDICATES THAT THE RIGHT LANE LMC WORK IS PERFORMED FIRST, FOLLOWED BY THE LEFT LANE LMC WORK. THE CONTRACTOR MAY ELECT TO SEQUENCE THE WORK DIFFERENTLY, BUT THE DIMENSIONS OF THE WORK ZONE AND CLEAR ROADWAY AREAS SHALL MATCH THAT INDICATED ON THIS PLAN SHEET, RESPECTIVE TO THE LANE WHERE THE LMC WORK IS BEING PERFORMED.

WHEN PREPARING THE SURFACE FOR LMC OVERLAY ADJACENT TO THE PREVIOUSLY PLACED LMC STAGE, THE PREVIOUSLY PLACED LMC SHALL BE SAW-CUT TO THE FULL DEPTH OF THE LMC AT THE CENTERLINE OF THE BRIDGE AND ALL LMC IN THE 4" OVERLAP SHALL BE REMOVED WITH HAND TOOLS PRIOR TO PLACEMENT OF LMC IN THE SECOND STAGE.

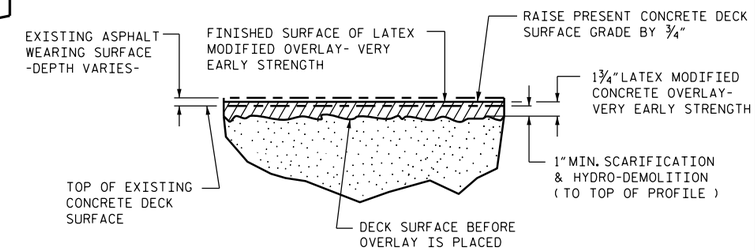

DETAIL FOR LATEX MODIFIED CONCRETE OVERLAY

(FINISHED SURFACE OF THE LATEX MODIFIED CONCRETE OVERLAY- VERY EARLY STRENGTH, IS APPROX. 1" BELOW THE SURFACE OF THE EXISTING ASPHALT WEARING SURFACE)

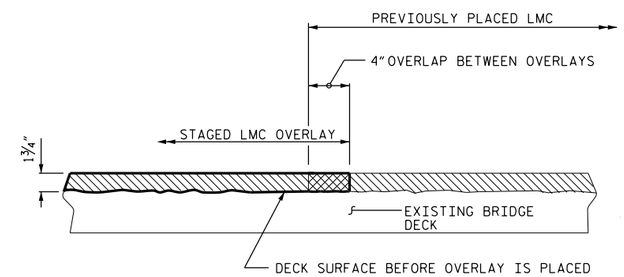

SECTION THRU DECK

STAGED LMC OVERLAY JOINT

(AS NEEDED)

PROJECT NO. BP-5500G

SAMPSON COUNTY

BRIDGE NO. 6

DocuSigned by:
W. Matthew Clarke
1EB20097EAAF437...
3/4/2015

NORTH CAROLINA PROFESSIONAL SEAL 40257 ENGINEER W. MATTHEW CLARKE

STATE OF NORTH CAROLINA
DEPARTMENT OF TRANSPORTATION
RALEIGH

TYPICAL SECTION AND OVERLAY DETAIL

REVISIONS						SHEET NO.
NO.	BY:	DATE:	NO.	BY:	DATE:	S-10
1			3			TOTAL SHEETS
2			4			20

DRAWN BY : S. T. SANDOR DATE : 05/2014
CHECKED BY : W. M. CLARKE DATE : 05/2014

25-FEB-2015 07:05
S:\PRS\POC\Squad C\Preservation_Projects\BP-5500\G\Final\SAMPSON6_SD_TS.dgn
ssandor