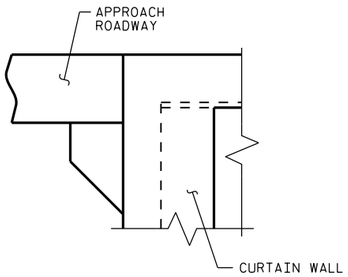

SECTION A-A
(EXISTING)

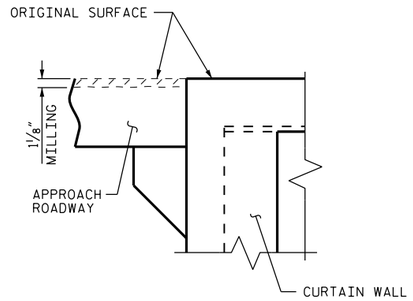

SECTION A-A
(MINIMUM EXISTING DEMOLITION)

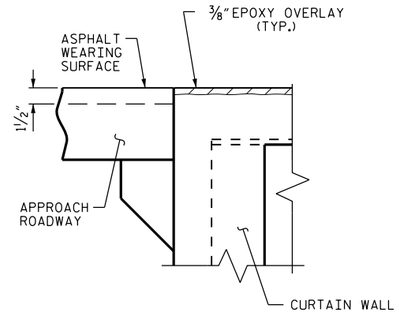

SECTION A-A
(PROPOSED)

NOTES:

FOR FOAM JOINT SEALS SEE SPECIAL PROVISIONS.

THE INSTALLED FOAM JOINT SEAL SHALL BE WATER TIGHT.

NOMINAL UNCOMPRESSED SEAL WIDTH OF FOAM JOINT SEAL SHALL BE 2".

THE CONTRACTOR WILL NOT BE PERMITTED TO FORM THE JOINTS IN LIEU OF SAWING THE JOINT.

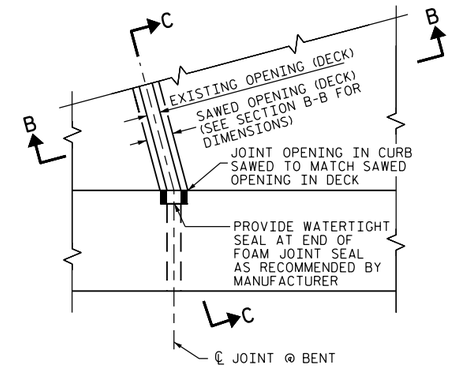

PLAN

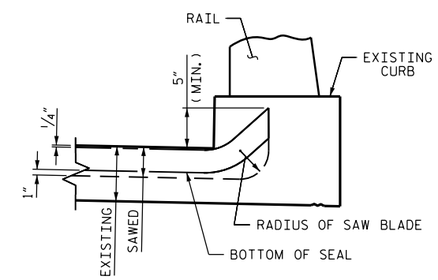

SECTION C-C

JOINT SEAL DETAILS AT BENT

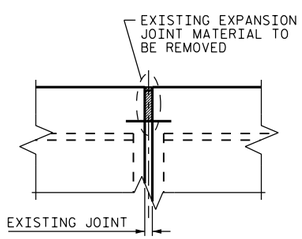

SECTION B-B
(EXISTING)

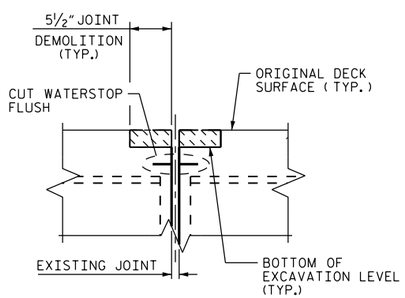

SECTION B-B
(MINIMUM EXISTING JOINT DEMOLITION)

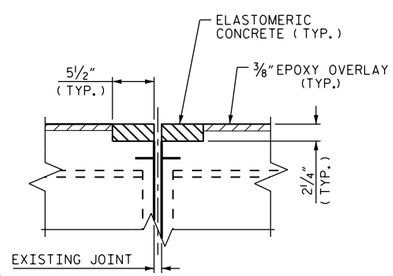

SECTION B-B
(PROPOSED JOINT PRE-SAWED DIMENSIONS)

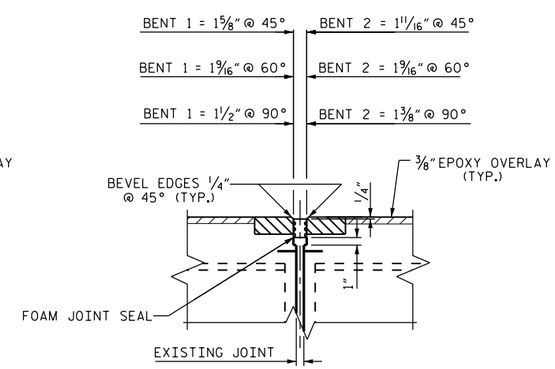

SECTION B-B
(PROPOSED FOAM JOINT SEAL)

IF THE EMBEDDED PORTION OF THE EXISITNG PLASTIC WATERSTOP IS EXPOSED DURING REMOVAL OF UNSOUND CONCRETE OR IF UNSOUND CONCRETE IS REMOVED WITHIN 2" OF THE WATERSTOP, THE ENTIRE WATERSTOP SHALL BE REMOVED

REMOVAL OF CONCRETE AT THE EXISTING JOINT SHALL RESULT IN THE BOTTOM OF THE EXCAVATION BEING REASONABLY FLAT AND LEVEL, TO PROVIDE SUFFICIENT SUBSTRATE FOR PLACEMENT AND SUPPORT OF ELASTOMERIC OR REPAIR CONCRETE.

PROJECT NO. BP-5500G
DUPLIN COUNTY
BRIDGE NO. 30

DocuSigned by:
W. Matthew Clarke
1EB20097EAAF437...
3/4/2015

NORTH CAROLINA PROFESSIONAL SEAL 40257 ENGINEER W. MATTHEW CLARKE

STATE OF NORTH CAROLINA
DEPARTMENT OF TRANSPORTATION
RALEIGH

JOINT DETAILS

REVISIONS						SHEET NO.
NO.	BY:	DATE:	NO.	BY:	DATE:	S-6
1			3			TOTAL SHEETS
2			4			20

DRAWN BY : S. T. SANDOR DATE : 03/2014
CHECKED BY : W. M. CLARKE DATE : 04/2014

25-FEB-2015 07:05
S:\PRS\POC\Squad C\Preservation_Projects\BP-5500\G\Final\DUPLIN30_SD_JS.dgn
ssandor