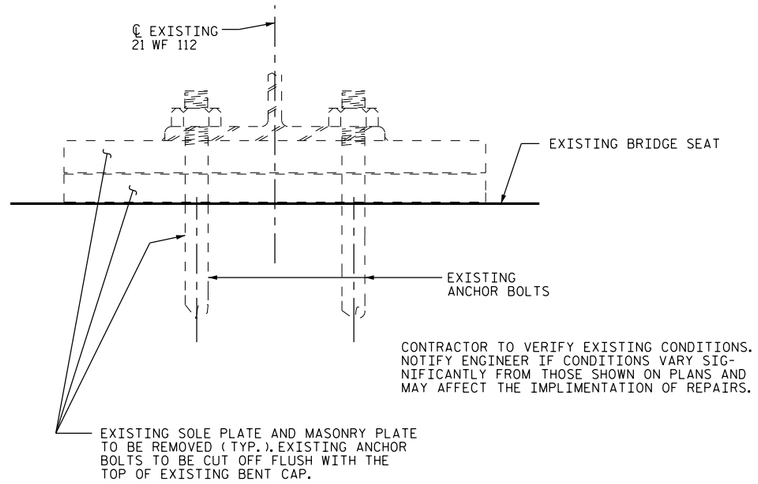

END VIEW

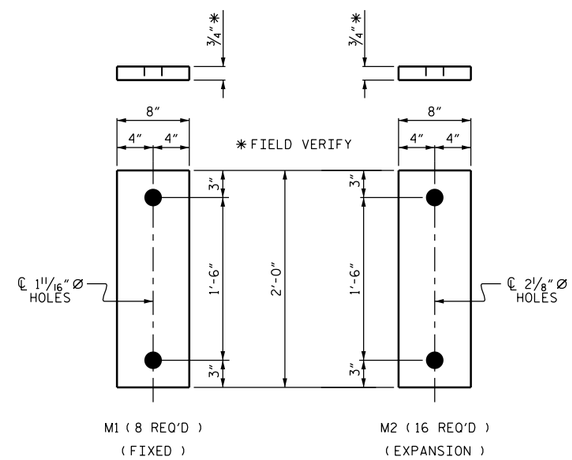

MASONRY PLATE

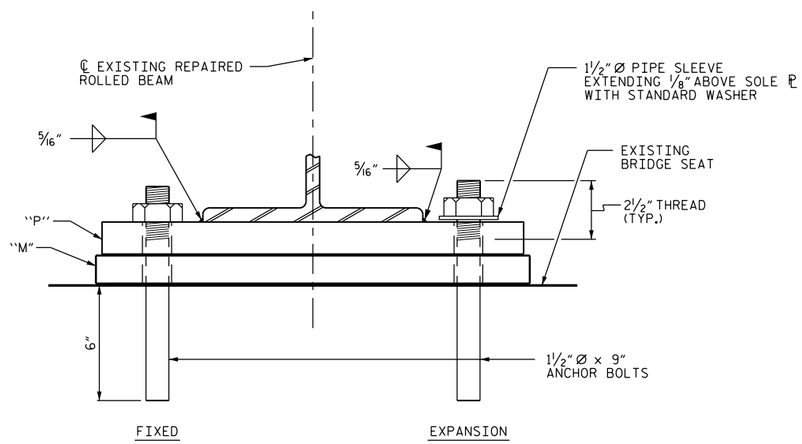

END VIEW
(48 ANCHOR BOLTS REQUIRED)

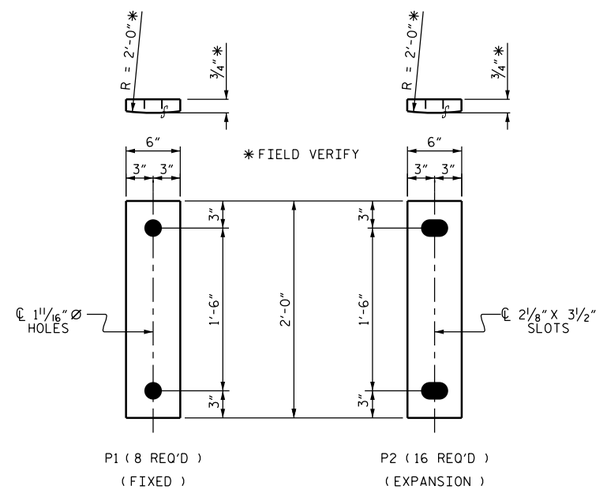

SOLE PLATE

REPLACE ALL BEARING ASSEMBLIES AT BENT 1, BENT 2 AND BENT 3.

BEARING REPAIR SEQUENCE

THE EXISTING BEARINGS DETERMINED FOR REPLACEMENT SHALL BE REMOVED AND REPLACED WITH BEARINGS AS SHOWN.

AT ALL FIXED POINTS OF SUPPORT, NUTS FOR ANCHOR BOLTS ARE TO BE TIGHTENED FINGER TIGHT AND THEN BACKED OFF ½TURN. THE THREAD OF THE NUT AND BOLT SHALL THEN BE BURRED WITH A SHARP POINTED TOOL.

SOLE PLATES, ANCHOR BOLTS, NUTS AND WASHERS SHALL BE GALVANIZED IN ACCORDANCE WITH THE STANDARD SPECIFICATIONS.

ANCHOR BOLTS SHALL MEET THE REQUIREMENTS OF ASTM A449. NUTS SHALL MEET THE REQUIREMENTS OF AASHTO M291-DH OR AASHTO M292-2H. WASHERS SHALL MEET THE REQUIREMENTS OF AASHTO M293. SHOP DRAWINGS ARE NOT REQUIRED FOR ANCHOR BOLTS, NUTS AND WASHERS. SHOP INSPECTION IS REQUIRED.

ANCHOR BOLTS SHALL BE ALL-THREAD OR SWEDGED OR DEFORMED BELLOW REQUIRED THREAD LENGTH. FOLLOW ALL MANUFACTURER RECOMMENDATION FOE ADHESIVELY INSTALLED ANCHORS.
ALL WELDING SHALL BE IN ACCORDANCE WITH CURRENT APPLICABLE AWS AND NCDOT STANDARD SPECIFICATIONS.

ALL WELDING SHALL BE IN ACCORDANCE WITH CURRENT APPLICABLE AWS AND NCDOT STANDARD SPECIFICATIONS.

ALL WELDS WILL BE INSPECTED AND TESTED BY THE NCDOT MATERIALS AND TEST UNIT IN ACCORDANCE WITH THE CURRENT AWS BRIDGE WELDING CODE AND STANDARD SPECIFICATIONS.

ALL SURFACES OF BEARING PLATES SHALL BE SMOOTH AND STRAIGHT.

THE CONTRACTOR SHALL CORE INTO EXISTING BENT CAP TO INSTALL 1½" ANCHOR BOLTS. BOLTS SHALL BE ADHESIVELY ANCHORED; SEE STANDARD SPECIFICATIONS. ADHESIVE FOR NEW ANCHOR BOLTS SHALL BE AN NCDOT-APPROVED PRODUCT. FIELD TESTING WILL NOT BE REQUIRED FOR INSTALLATION OF ADHESIVELY ANCHORED BOLTS.

PROJECT NO. BP-5500G
SAMPSON COUNTY
BRIDGE NO. 6

DocuSigned by:
W. Matthew Clarke
1EB20097EAAF437...
3/26/2015

NORTH CAROLINA PROFESSIONAL SEAL 40257 ENGINEER W. MATTHEW CLARKE

STATE OF NORTH CAROLINA
DEPARTMENT OF TRANSPORTATION
RALEIGH

BEARING REPLACEMENT DETAILS

NO.	BY:	DATE:	NO.	BY:	DATE:
1			3		
2			4		

SHEET NO. S-16
TOTAL SHEETS 20

DRAWN BY : S. T. SANDOR DATE : 04/2014
CHECKED BY : W. M. CLARKE DATE : 04/2014

26-MAR-2015 12:55
R:\Structures\Final Drawings\SAMPSON6_SD_Steel_Repair.dgn
ssandor