This electronic collection of documents is provided for the convenience of the user and is Not a Certified Document –

The documents contained herein were originally issued and sealed by the individuals whose names and license numbers appear on each page, on the dates appearing with their signature on that page.
This file or an individual page shall not be considered a certified document.

DocuSign Envelope ID: 20EAAAC1-BB8F-427E-8DCC-9CB3AA2CAB56

09/08/99

PROJECT: 17BP.3.R.60

CONTRACT: DC00211

See Sheet 1-A For Index of Sheets
See Sheet 1-B For Conventional Symbols

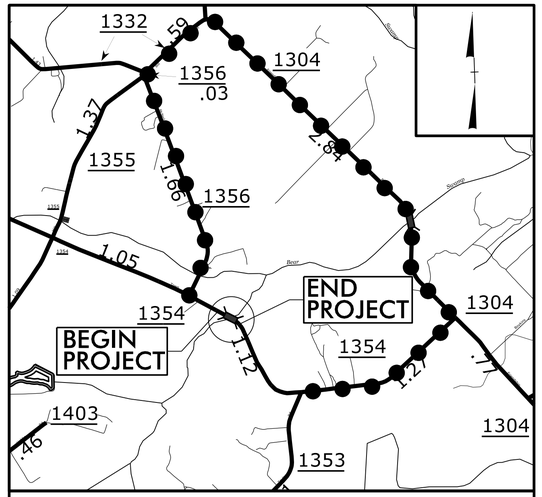

VICINITY MAP

DETOUR ROUTE

N.T.S.

STATE OF NORTH CAROLINA
DIVISION OF HIGHWAYS

DUPLIN COUNTY

STATE	STATE PROJECT REFERENCE NO.	SHEET NO.	TOTAL SHEETS
N.C.	17BP.3.R.60	1	52

STATE PROJ. NO.	F.A. PROJ. NO.	DESCRIPTION
17BP.3.R.60	N/A	P.E.
17BP.3.R.60	N/A	ROW/UTIL.
17BP.3.R.60	N/A	CONST.

100% PLANS

LOCATION: REPLACE BRIDGE 219 OVER BEAR SWAMP ON SR 1354 (TAYLOR TOWN ROAD)

TYPE OF WORK: GRADING, DRAINAGE, PAVING AND STRUCTURE

NAD 83/NA 2011

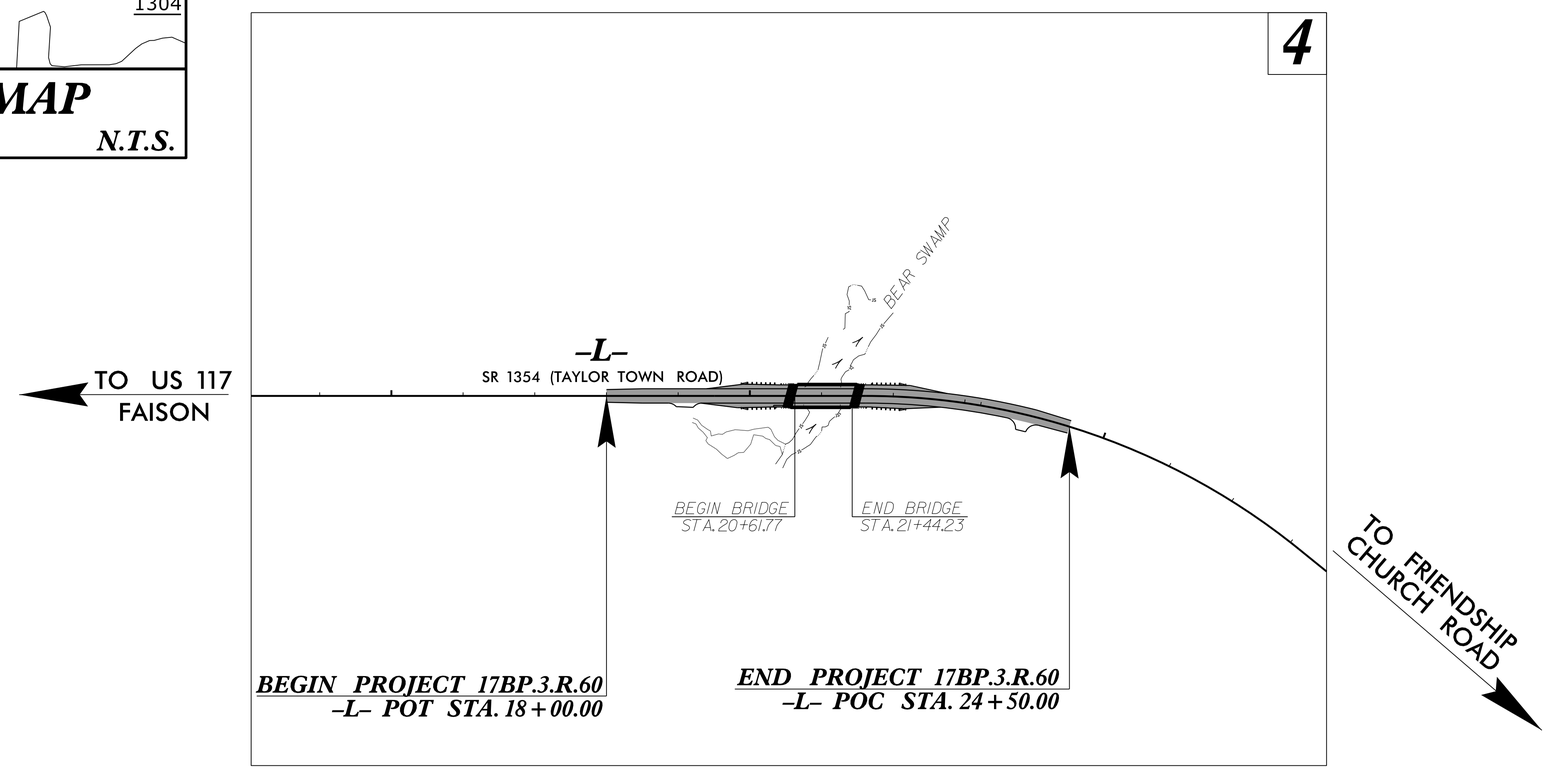

DOCUMENT NOT CONSIDERED FINAL UNLESS ALL SIGNATURES COMPLETED

GRAPHIC SCALES

50 25 0 50 100
PLANS

50 25 0 50 100
PROFILE (HORIZONTAL)

5 2.5 0 5 10
PROFILE (VERTICAL)

DESIGN DATA

ADT 2018 = 209 VPD
ADT 2038 = 377 VPD
DHV = N/A
D = N/A
T = N/A
V = 60 MPH

FUNC CLASS =
LOCAL
SUB-REGIONAL TIER

PROJECT LENGTH

LENGTH ROADWAY PROJECT 17BP.3.R.60	=	0.107 MILES
LENGTH BRIDGE PROJECT 17BP.3.R.60	=	0.016 MILES
TOTAL LENGTH PROJECT 17BP.3.R.60	=	0.123 MILES

Prepared in the Office of:

CDM Smith

CDM Smith Inc.
5400 Glenwood Avenue
Suite 400
Raleigh, NC 27612-3228
NC COA No. F-1255

FOR THE NORTH CAROLINA DEPARTMENT OF TRANSPORTATION

2018 STANDARD SPECIFICATIONS

RIGHT OF WAY DATE:
APRIL 06, 2018

LETTING DATE:
JULY 19, 2018

DAVID Z. KEISER, PE
PROJECT ENGINEER

ADAM M. CONRAD, PE
PROJECT DESIGN ENGINEER

ALTON R. EDGERTON, PE
NCDOT CONTACT

HYDRAULICS ENGINEER

DocuSigned by: D. C. Duffield
AEB34B4EB8C044A...
SIGNATURE:

5/23/2018 11:32:09 AM EDT
NORTH CAROLINA PROFESSIONAL SEAL 030405 ENGINEER D. C. DUFFIELD
P.E.

ROADWAY DESIGN ENGINEER

DocuSigned by: David Z. Keiser
5FFD9D9D25E9A04...
SIGNATURE:

5/23/2018 11:36:54 AM EDT
NORTH CAROLINA PROFESSIONAL SEAL 033400 ENGINEER DAVID Z. KEISER
P.E.

STATE OF NORTH CAROLINA DEPARTMENT OF TRANSPORTATION

-SYSTIME
...\17BP.3.R.60_Rdy_tsn.dgn
USER: CONRADAM

DocuSign Envelope ID: 20EAAAC1-BB8F-427E-8DCC-9CB3AA2CAB56

8/17/99

PROJECT REFERENCE NO.	SHEET NO.
17BP.3.R.60	1A

DOCUMENT NOT CONSIDERED FINAL UNLESS ALL SIGNATURES COMPLETED

ROADWAY DESIGN ENGINEER

NORTH CAROLINA PROFESSIONAL SEAL 033400 ENGINEER DAVID R. KESSER

5/22/2018 11:36:54 AM EDT

DocuSigned by: David R. Kesser
5FED0B0D25FB4D4...

CDM Smith
CDM Smith Inc.
5400 Glenwood Avenue
Suite 400
Raleigh, NC 27612-3225
NC COA No. F-1255

INDEX OF SHEETS

SHEET NUMBER	SHEET
1	TITLE SHEET
1A	INDEX OF SHEETS, GENERAL NOTES AND STANDARD DRAWINGS
1B	CONVENTIONAL SYMBOLS
1C	SURVEY CONTROL SHEET
1D	CENTERLINE COORDINATE LIST
1E	RIGHT OF WAY CONTROL SHEET
2A-1 THRU 2A-2	PAVEMENT SCHEDULE AND TYPICAL SECTIONS
2C-1	DETAIL OF MODIFIED METHOD OF CLEARING III
3B-1 THRU 3B-2	EARTHWORK, PAVEMENT REMOVAL, GUARDRAIL SUMMARY, SHOULDER BERM GUTTER AND DRAINAGE SUMMARY
4-5	PLAN AND PROFILE SHEETS
TMP-1 THRU TMP-3	TRANSPORTATION MANAGEMENT PLAN
PMP-1 THRU PMP-2	PAVEMENT MARKING PLAN
EC-1 THRU EC-5	EROSION CONTROL PLAN
X-1 THRU X-5	CROSS-SECTION SHEET INDEX AND CROSS-SECTIONS
S-1 THRU S-19	STRUCTURE PLANS

EFF. 01-16-2018
REV.

2018 ROADWAY ENGLISH STANDARD DRAWINGS

The following Roadway Standards as appear in "Roadway Standard Drawings" Highway Design Branch - N. C. Department of Transportation - Raleigh, N. C., Dated January, 2018 are applicable to this project and by reference hereby are considered a part of these plans:

STD.NO.	TITLE
DIVISION 2 - EARTHWORK	
200.03	Method of Clearing - Modified Method III (Use Detail in Lieu of Standard)
225.02	Guide for Grading Subgrade - Secondary and Local
225.04	Method of Obtaining Superelevation - Two Lane Pavement
DIVISION 3 - PIPE CULVERTS	
300.01	Method of Pipe Installation
DIVISION 4 - MAJOR STRUCTURES	
422.02	Bridge Approach Fills - Type II Modified Approach Fill
DIVISION 5 - SUBGRADE, BASES AND SHOULDERS	
560.01	Method of Shoulder Construction - High Side of Superelevated Curve - Method I
DIVISION 8 - INCIDENTALS	
815.02	Subsurface Drain
840.00	Concrete Base Pad for Drainage Structures
840.29	Frames and Narrow Slot Flat Grates
840.35	Traffic Bearing Grated Drop Inlet - for Cast Iron Double Frame and Grates
840.36	Traffic Bearing Grated Drop Inlet - for Steel (840.37) Double Frame and Grates
846.01	Concrete Curb, Gutter and Curb & Gutter
846.04	Drop Inlet Installation in Shoulder Berm Gutter
862.01	Guardrail Placement
862.02	Guardrail Installation
862.03	Structure Anchor Units
876.02	Guide for Rip Rap at Pipe Outlets
876.04	Drainage Ditches with Class 'B' Rip Rap

GENERAL NOTES:

2018 SPECIFICATIONS
EFFECTIVE: 01-16-2018
REVISED:

GRADING AND SURFACING:

THE GRADE LINES SHOWN DENOTE THE FINISHED ELEVATION OF THE PROPOSED SURFACING AT GRADE POINTS SHOWN ON THE TYPICAL SECTIONS. GRADE LINES MAY BE ADJUSTED AT THEIR BEGINNING AND ENDING AND AT STRUCTURES AS DIRECTED BY THE ENGINEER IN ORDER TO SECURE A PROPER TIE-IN.

CLEARING:

CLEARING ON THIS PROJECT SHALL BE PERFORMED TO THE LIMITS ESTABLISHED BY MODIFIED METHOD III.

SUPERELEVATION:

ALL CURVES ON THIS PROJECT SHALL BE SUPERELEVATED IN ACCORDANCE WITH STD. NO. 225.04 USING THE RATE OF SUPERELEVATION AND RUNOFF SHOWN ON THE PLANS. SUPERELEVATION IS TO BE REVOLVED ABOUT THE GRADE POINTS SHOWN ON THE TYPICAL SECTIONS.

SHOULDER CONSTRUCTION:

ASPHALT, EARTH, AND CONCRETE SHOULDER CONSTRUCTION ON THE HIGH SIDE OF SUPERELEVATED CURVES SHALL BE IN ACCORDANCE WITH STD. NO. 560.01

GUARDRAIL:

THE GUARDRAIL LOCATIONS SHOWN ON THE PLANS MAY BE ADJUSTED DURING CONSTRUCTION AS DIRECTED BY THE ENGINEER. THE CONTRACTOR SHOULD CONSULT WITH THE ENGINEER PRIOR TO ORDERING GUARDRAIL MATERIAL.

END BENTS:

THE ENGINEER SHALL CHECK THE STRUCTURE END BENT PLANS, DETAILS, AND CROSS-SECTION PRIOR TO SETTING OF THE SLOPE STAKES FOR THE EMBANKMENT OR EXCAVATION APPROACHING A BRIDGE.

UTILITIES:

UTILITY OWNERS ON THIS PROJECT ARE

POWER (DISTRIBUTION): TRI-COUNTY EMC
COMMUNICATIONS: SPECTRUM
WATER: DUPLIN COUNTY WATER

SEE SPECIAL PROVISIONS FOR DE-ENERGIZING OF SOUTH RIVER ELECTRICAL MEMBERSHIP CORPORATION UTILITY DURING CONSTRUCTION.

RIGHT-OF-WAY MARKERS:

ALL RIGHT-OF-WAY MARKERS AND PERMANENT EASEMENT MARKERS ARE TO BE PLACED BY L&S. THE CONTRACT SURVEYOR WILL BE RESPONSIBLE RESETTING ANY POINTS DISTURBED DURING CONSTRUCTION.

-SYSTIME
-USER
-INTERFACE
-DGNFILE
17BP.3.R.60_Rdy_psh_1A.dgn

12/2/2016

PROJECT REFERENCE NO.	SHEET NO.
17BP.3.R.60	1B

STATE OF NORTH CAROLINA, DIVISION OF HIGHWAYS

CONVENTIONAL PLAN SHEET SYMBOLS

Note: Not to Scale

S.U.E. = *Subsurface Utility Engineering

BOUNDARIES AND PROPERTY:

- State Line
- County Line
- Township Line
- City Line
- Reservation Line
- Property Line
- Existing Iron Pin — EIP
- Computed Property Corner
- Property Monument — ECM
- Parcel/Sequence Number — 123
- Existing Fence Line
- Proposed Woven Wire Fence
- Proposed Chain Link Fence
- Proposed Barbed Wire Fence
- Existing Wetland Boundary — WLB
- Proposed Wetland Boundary — WLB
- Existing Endangered Animal Boundary — EAB
- Existing Endangered Plant Boundary — EPB
- Existing Historic Property Boundary — HPB
- Known Contamination Area: Soil — S
- Potential Contamination Area: Soil — S
- Known Contamination Area: Water — W
- Potential Contamination Area: Water — W
- Contaminated Site: Known or Potential

BUILDINGS AND OTHER CULTURE:

- Gas Pump Vent or U/G Tank Cap
- Sign — S
- Well — W
- Small Mine
- Foundation
- Area Outline
- Cemetery
- Building
- School
- Church
- Dam

HYDROLOGY:

- Stream or Body of Water
- Hydro, Pool or Reservoir
- Jurisdictional Stream — JS
- Buffer Zone 1 — BZ 1
- Buffer Zone 2 — BZ 2
- Flow Arrow
- Disappearing Stream
- Spring
- Wetland
- Proposed Lateral, Tail, Head Ditch — FLOW
- False Sump

RAILROADS:

- Standard Gauge — CSX TRANSPORTATION
- RR Signal Milepost — MILEPOST 35
- Switch — SWITCH
- RR Abandoned
- RR Dismantled

RIGHT OF WAY & PROJECT CONTROL:

- Secondary Horiz and Vert Control Point
- Primary Horiz Control Point
- Primary Horiz and Vert Control Point
- Exist Permanent Easment Pin and Cap
- New Permanent Easement Pin and Cap
- Vertical Benchmark
- Existing Right of Way Marker
- Existing Right of Way Line
- New Right of Way Line — RW
- New Right of Way Line with Pin and Cap — RW
- New Right of Way Line with Concrete or Granite R/W Marker — RW
- New Control of Access Line with Concrete C/A Marker — CA
- Existing Control of Access — CA
- New Control of Access — CA
- Existing Easement Line — E
- New Temporary Construction Easement — E
- New Temporary Drainage Easement — TDE
- New Permanent Drainage Easement — PDE
- New Permanent Drainage / Utility Easement — DUE
- New Permanent Utility Easement — PUE
- New Temporary Utility Easement — TUE
- New Aerial Utility Easement — AUE

ROADS AND RELATED FEATURES:

- Existing Edge of Pavement
- Existing Curb
- Proposed Slope Stakes Cut — C
- Proposed Slope Stakes Fill — F
- Proposed Curb Ramp — CR
- Existing Metal Guardrail — T
- Proposed Guardrail — T
- Existing Cable Guiderail
- Proposed Cable Guiderail
- Equality Symbol
- Pavement Removal

VEGETATION:

- Single Tree
- Single Shrub
- Hedge
- Woods Line
- Orchard
- Vineyard — Vineyard

EXISTING STRUCTURES:

MAJOR:

- Bridge, Tunnel or Box Culvert — CONC
- Bridge Wing Wall, Head Wall and End Wall — CONC WW

MINOR:

- Head and End Wall — CONC HW
- Pipe Culvert
- Footbridge
- Drainage Box: Catch Basin, DI or JB — CB
- Paved Ditch Gutter
- Storm Sewer Manhole — S
- Storm Sewer — S

UTILITIES:

POWER:

- Existing Power Pole
- Proposed Power Pole
- Existing Joint Use Pole
- Proposed Joint Use Pole
- Power Manhole — P
- Power Line Tower
- Power Transformer
- U/G Power Cable Hand Hole
- H-Frame Pole
- U/G Power Line LOS B (S.U.E.*) — P
- U/G Power Line LOS C (S.U.E.*) — P
- U/G Power Line LOS D (S.U.E.*) — P

TELEPHONE:

- Existing Telephone Pole
- Proposed Telephone Pole
- Telephone Manhole — T
- Telephone Pedestal — T
- Telephone Cell Tower
- U/G Telephone Cable Hand Hole
- U/G Telephone Cable LOS B (S.U.E.*) — T
- U/G Telephone Cable LOS C (S.U.E.*) — T
- U/G Telephone Cable LOS D (S.U.E.*) — T
- U/G Telephone Conduit LOS B (S.U.E.*) — TC
- U/G Telephone Conduit LOS C (S.U.E.*) — TC
- U/G Telephone Conduit LOS D (S.U.E.*) — TC
- U/G Fiber Optics Cable LOS B (S.U.E.*) — T FO
- U/G Fiber Optics Cable LOS C (S.U.E.*) — T FO
- U/G Fiber Optics Cable LOS D (S.U.E.*) — T FO

WATER:

- Water Manhole — W
- Water Meter
- Water Valve
- Water Hydrant
- U/G Water Line LOS B (S.U.E*) — W
- U/G Water Line LOS C (S.U.E*) — W
- U/G Water Line LOS D (S.U.E*) — W
- Above Ground Water Line — A/G Water

TV:

- TV Pedestal — C
- TV Tower
- U/G TV Cable Hand Hole
- U/G TV Cable LOS B (S.U.E.*) — TV
- U/G TV Cable LOS C (S.U.E.*) — TV
- U/G TV Cable LOS D (S.U.E.*) — TV
- U/G Fiber Optic Cable LOS B (S.U.E.*) — TV FO
- U/G Fiber Optic Cable LOS C (S.U.E.*) — TV FO
- U/G Fiber Optic Cable LOS D (S.U.E.*) — TV FO

GAS:

- Gas Valve
- Gas Meter
- U/G Gas Line LOS B (S.U.E.*) — G
- U/G Gas Line LOS C (S.U.E.*) — G
- U/G Gas Line LOS D (S.U.E.*) — G
- Above Ground Gas Line — A/G Gas

SANITARY SEWER:

- Sanitary Sewer Manhole
- Sanitary Sewer Cleanout
- U/G Sanitary Sewer Line — SS
- Above Ground Sanitary Sewer — A/G Sanitary Sewer
- SS Forced Main Line LOS B (S.U.E.*) — FSS
- SS Forced Main Line LOS C (S.U.E.*) — FSS
- SS Forced Main Line LOS D (S.U.E.*) — FSS

MISCELLANEOUS:

- Utility Pole
- Utility Pole with Base
- Utility Located Object
- Utility Traffic Signal Box — S
- Utility Unknown U/G Line LOS B (S.U.E.*) — ?UTL
- U/G Tank; Water, Gas, Oil
- Underground Storage Tank, Approx. Loc. — UST
- A/G Tank; Water, Gas, Oil
- Geoenvironmental Boring
- U/G Test Hole LOS A (S.U.E.*)
- Abandoned According to Utility Records — AATUR
- End of Information — E.O.I.

PROJECT REFERENCE NO.	SHEET NO.
17BP.3.R.60	1C
Location and Surveys	

PROJECT SURVEYOR

SURVEY CONTROL SHEET 30_0219

W/ EXISTING CENTERLINE ALIGNMENTS PRIOR TO CONSTRUCTION

DATUM DESCRIPTION

THE LOCALIZED COORDINATE SYSTEM DEVELOPED FOR THIS PROJECT IS BASED ON THE STATE PLANE COORDINATES ESTABLISHED BY NCDOT FOR MONUMENT "GPS2"
WITH NAD 83/NA 2011 STATE PLANE GRID COORDINATES OF
NORTHING: 486822.923(ft) EASTING: 2271740.977(ft)
ELEVATION: 104.793(ft)
THE AVERAGE COMBINED GRID FACTOR USED ON THIS PROJECT (GROUND TO GRID) IS: 0.99987736
THE N.C. LAMBERT GRID BEARING AND LOCALIZED HORIZONTAL GROUND DISTANCE FROM "GPS2" TO -L- STATION 10+00.00 IS N 60° 42' 39.6" W 580.978'
ALL LINEAR DIMENSIONS ARE LOCALIZED HORIZONTAL DISTANCES
VERTICAL DATUM USED IS NAVD 88

NC GRID
NAD 83 NA 2011

BM1 ELEVATION = 108.03
N 486594 E 2272328
RR SPIKE IN 18" GUM

BM2 ELEVATION = 125.40
N 486383 E 2272571
RR SPIKE IN 16" OAK

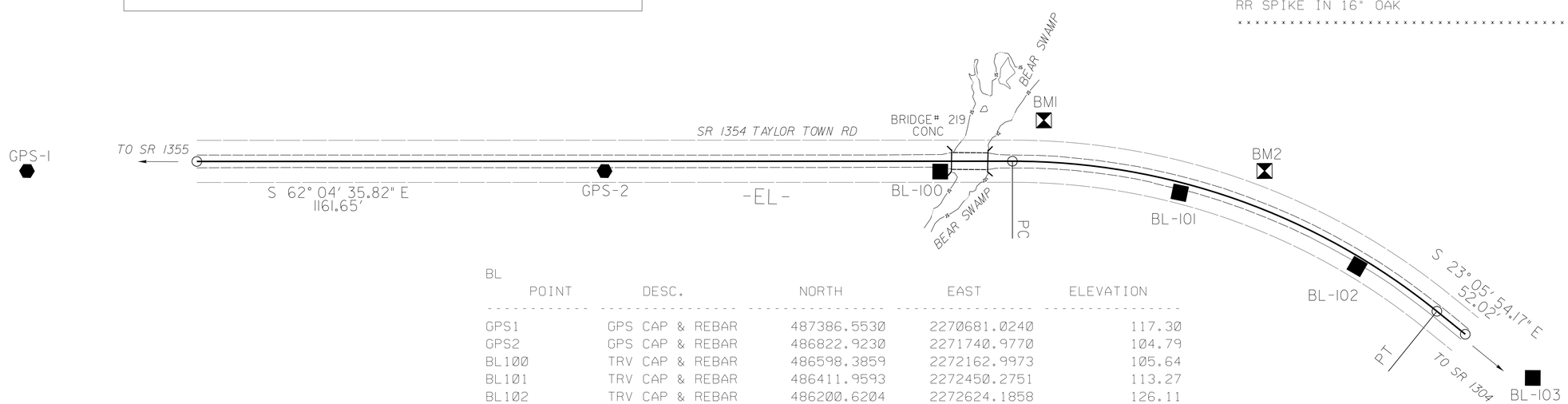

BL

POINT	DESC.	NORTH	EAST	ELEVATION
GPS1	GPS CAP & REBAR	487386.5530	2270681.0240	117.30
GPS2	GPS CAP & REBAR	486822.9230	2271740.9770	104.79
BL100	TRV CAP & REBAR	486598.3859	2272162.9973	105.64
BL101	TRV CAP & REBAR	486411.9593	2272450.2751	113.27
BL102	TRV CAP & REBAR	486200.6204	2272624.1858	126.11
BL103	TRV CAP & REBAR	485943.2059	2272770.7251	132.71

EL

POINT	N	E	BEARING	DIST	DELTA	D	L	T	R
POT	487107.146	2271234.270							
LINE			S 62°04'35.8" E	1161.65					
PC	486563.154	2272260.678							
CURVE			S 42°35'38.7" E	641.22	38°59'29.2"(RT)	05°57'51.1"	653.76	340.11	960.66
PT	486091.113	2272694.652							
LINE			S 23°05'54.2" E	52.02					
POT	486043.260	2272715.062							

NOTES:

1. IF FURTHER INFORMATION REGARDING PROJECT CONTROL IS NEEDED, PLEASE CONTACT THE LOCATION AND SURVEYS UNIT.

2. PROJECT CONTROL WAS ESTABLISHED USING GNSS, THE GLOBAL NAVIGATION SATELLITE SYSTEM.

NOTE: DRAWING NOT TO SCALE

6/2/99

-SYSTIME
-SYSTEM
-itsLRP:17BP.3.R.60 Rdy.psh.1C.dgn

6/2/99

PROJECT REFERENCE NO.	SHEET NO.
17BP.3.R.60	1D
Location and Surveys	

PROJECT SURVEYOR

PROPOSED ALIGNMENT CONTROL SHEET 30_0219

L

TYPE	STATION	NORTH	EAST
POT	10+00.00	487107.1459	2271234.2697
PC	21+62.11	486562.9412	2272261.0799
PT	28+15.20	486091.3283	2272694.5604
POT	28+67.45	486043.2599	2272715.0616

NOTES:

1. IF FURTHER INFORMATION REGARDING PROJECT CONTROL IS NEEDED, PLEASE CONTACT THE LOCATION AND SURVEYS UNIT.

2. PROJECT CONTROL WAS ESTABLISHED USING GNSS, THE GLOBAL NAVIGATION SATELLITE SYSTEM.

NOTE: DRAWING NOT TO SCALE

-SYSTIME
its-17BP.3.R.60_Rdy_psh_1D.dgn
its-17BP.3.R.60_MAP

PROJECT REFERENCE NO.	SHEET NO.
17BP.3.R.60	1E
Location and Surveys	

PROJECT SURVEYOR

RIGHT OF WAY CONTROL SHEET 30–0219

L

ALIGN	STATION	OFFSET	NORTH	EAST
L	19+30.00	30.00	486645.12853	2272041.94530
L	19+45.00	-30.00	486691.11865	2272083.29634
L	19+55.00	-40.00	486695.27149	2272096.81499
L	20+00.00	-50.00	486683.03417	2272141.25876
L	20+25.00	50.00	486582.96945	2272116.51907
L	21+65.00	-60.00	486614.51330	2272291.88893
L	21+65.00	-40.00	486596.87009	2272282.46995
L	22+00.00	50.00	486501.32093	2272269.06079
L	22+75.00	30.02	486479.64447	2272340.41812
L	22+75.00	-29.98	486528.99632	2272374.54135
L	22+75.00	-45.00	486541.35310	2272383.08516

NOTES:

1. IF FURTHER INFORMATION REGARDING PROJECT CONTROL IS NEEDED, PLEASE CONTACT THE LOCATION AND SURVEYS UNIT.

2. PROJECT CONTROL WAS ESTABLISHED USING GNSS, THE GLOBAL NAVIGATION SATELLITE SYSTEM.

REVISIONS

6/2/99

-SYSTIME
-SYSTAB
-RESTRIPMARKING
17BP.3.R.60_Rdy_psh_1E.dgn

DocuSign Envelope ID: 20EAAAC1-BB8F-427E-8DCC-9CB3AA2CAB56

6/2/99

PROJECT REFERENCE NO.	SHEET NO.
17BP.3.R.60	2A-1
ROADWAY DESIGN ENGINEER	PAVEMENT DESIGN ENGINEER

NORTH CAROLINA PROFESSIONAL SEAL 033400 ENGINEER DAVID R. KEISER
5/22/2018 11:36:54 AM EDT
DocuSigned by: David R. Keiser
5FFD0B2D25FB4D4...

CDM Smith
CDM Smith Inc.
5400 Glenwood Avenue
Suite 400
Raleigh, NC 27612-3228
NC COA No. F-1255

DOCUMENT NOT CONSIDERED FINAL UNLESS ALL SIGNATURES COMPLETED

PAVEMENT SCHEDULE

(FINAL PAVEMENT DESIGN)

C1	PROP. APPROX. 1.5″ ASPHALT CONCRETE SURFACE COURSE, TYPE S9.5B, AT AN AVERAGE RATE OF 165 LBS. PER SQ. YD.
C2	PROP. APPROX. 3″ ASPHALT CONCRETE SURFACE COURSE, TYPE S9.5B, AT AN AVERAGE RATE OF 165 LBS. PER SQ. YD. IN EACH OF TWO LAYERS.
C3	PROP. VAR. DEPTH ASPHALT CONCRETE SURFACE COURSE, TYPE S9.5B, AT AN AVERAGE RATE OF 110 LBS. PER SQ. YD. PER 1″ DEPTH. TO BE PLACED IN LAYERS NOT LESS THAN 1″ IN DEPTH OR GREATER THAN 1.5″ IN DEPTH.
E1	PROP. APPROX. 5.5″ ASPHALT CONCRETE BASE COURSE, TYPE B25.0C, AT AN AVERAGE RATE OF 627 LBS. PER SQ. YD.
E2	PROP. VAR. DEPTH ASPHALT CONCRETE BASE COURSE, TYPE B25.0C, AT AN AVERAGE RATE OF 114 LBS. PER SQ. YD. PER 1″ DEPTH. TO BE PLACED IN LAYERS NOT LESS THAN 3″ IN DEPTH OR GREATER THAN 5.5″ IN DEPTH.
R1	SHOULDER BERM GUTTER
T	EARTH MATERIAL.
U	EXISTING PAVEMENT.
V	INCIDENTAL MILLING
W	VARIABLE DEPTH ASPHALT PAVEMENT (SEE -L- WEDGING DETAIL)

NOTE: ALL PAVEMENT EDGE SLOPES ARE 1:1 UNLESS SHOWN OTHERWISE.

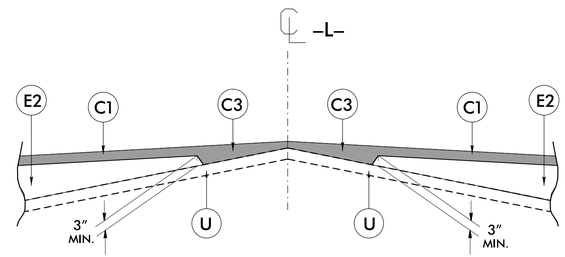

Detail Showing Method Of Wedging – W
–L–

MILLING DETAIL
INCIDENTAL MILLING AT BEGIN/END FOR TIE–INS

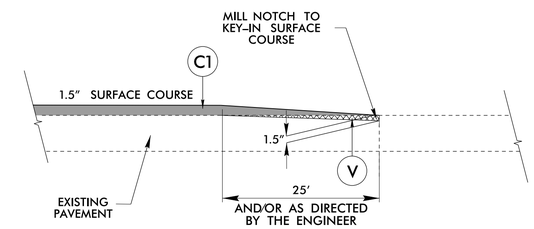

–L– STA. 18+00.00 TO STA. 18+25.00
–L– STA. 24+25.00 TO STA. 24+50.00

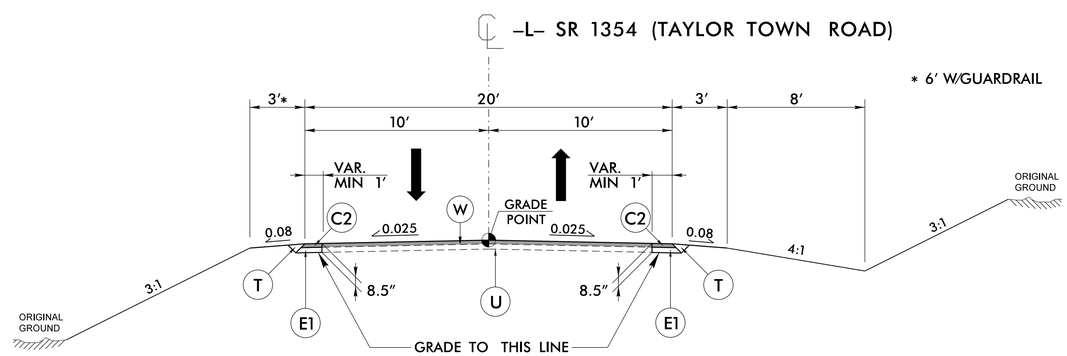

TYPICAL SECTION NO. 1

USE TYPICAL SECTION NO. 1

–L– STA. 18+00.00 TO STA. 19+55.00
–L– STA. 23+05.00 TO STA. 24+50.00

-SYSTIME
-SCALE
ITS-PROGRAM
17BP.3.R.60_Rdy_typ.dgn

DocuSign Envelope ID: 20EAAAC1-BB8F-427E-8DCC-9CB3AA2CAB56

PROJECT REFERENCE NO.	SHEET NO.
17BP.3.R.60	2A-2

ROADWAY DESIGN ENGINEER

PAVEMENT DESIGN ENGINEER

NORTH CAROLINA PROFESSIONAL SEAL 033400 ENGINEER DAVID R. KEISER

5/22/2018 11:36:54 AM EDT

DocuSigned by: David R. Keiser

5EFD0B0025EB4D4...

CDM Smith
CDM Smith Inc.
5400 Glenwood Avenue
Suite 400
Raleigh, NC 27612-3228
NC COA No. F-1255

DOCUMENT NOT CONSIDERED FINAL UNLESS ALL SIGNATURES COMPLETED

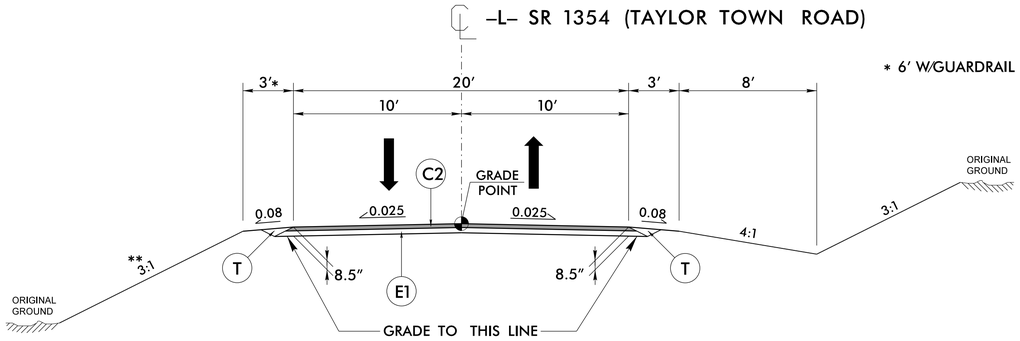

** FILL SLOPE VARIES 3:1 TO 2:1 FROM STA. 21+40 TO STA. 22+50 (RT)

TYPICAL SECTION NO. 2

USE TYPICAL SECTION NO. 2

–L– STA. 19+55.00 TO STA. 20+61.77 (BEGIN BRIDGE)
–L– STA. 21+44.23 (END BRIDGE) TO STA 23+05.00

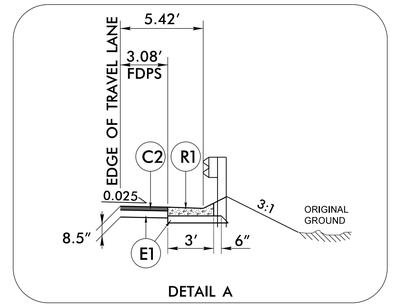

DETAIL A

USE DETAIL A IN CONJUNCTION WITH TYPICAL SECTION NO. 2

–L– STA. 20+33.00 TO STA. 20+47.00 (RT)

PAVEMENT SCHEDULE (FINAL PAVEMENT DESIGN)	
C1	1.5″ S9.5B
C2	3″ S9.5B
C3	VAR. S9.5B
E1	5.5″ B25.0C
E2	VAR. B25.0C
R1	SBG
T	EARTH MATERIAL
U	EXIST. PAVEMENT
V	INCIDENTAL MILLING
W	WEDGING

PAVEMENT EDGESLOPES 1:1 UNLESS NOTED OTHERWISE

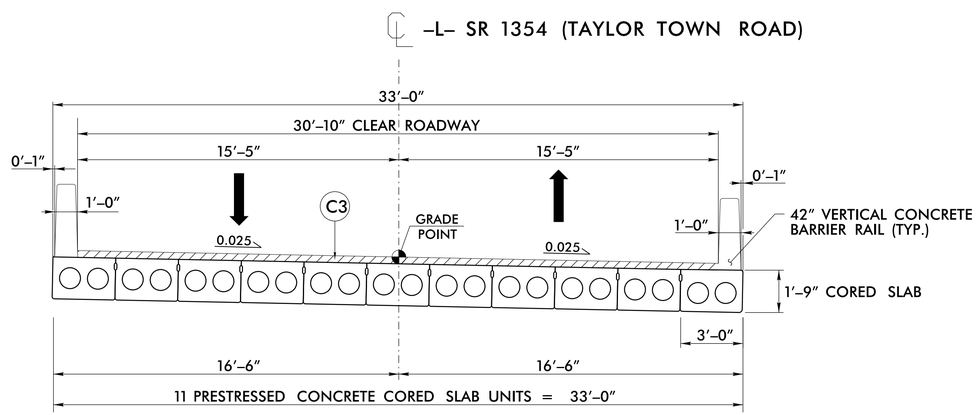

TYPICAL SECTION NO. 3

USE BRIDGE TYPICAL SECTION NO. 3

–L– STA. 20+61.77 (BEGIN BRIDGE) TO STA. 21+44.23 (END BRIDGE)

6/2/99

SYSTIME = 17:36:00
ISEED = 1000000
ISEED = 1000000

STATE OF NORTH CAROLINA
DEPT. OF TRANSPORTATION
DIVISION OF HIGHWAYS
RALEIGH, N.C.

ENGLISH DETAIL DRAWING FOR
METHOD OF CLEARING
MODIFIED METHOD - III

SHEET 1 OF 1
200D03

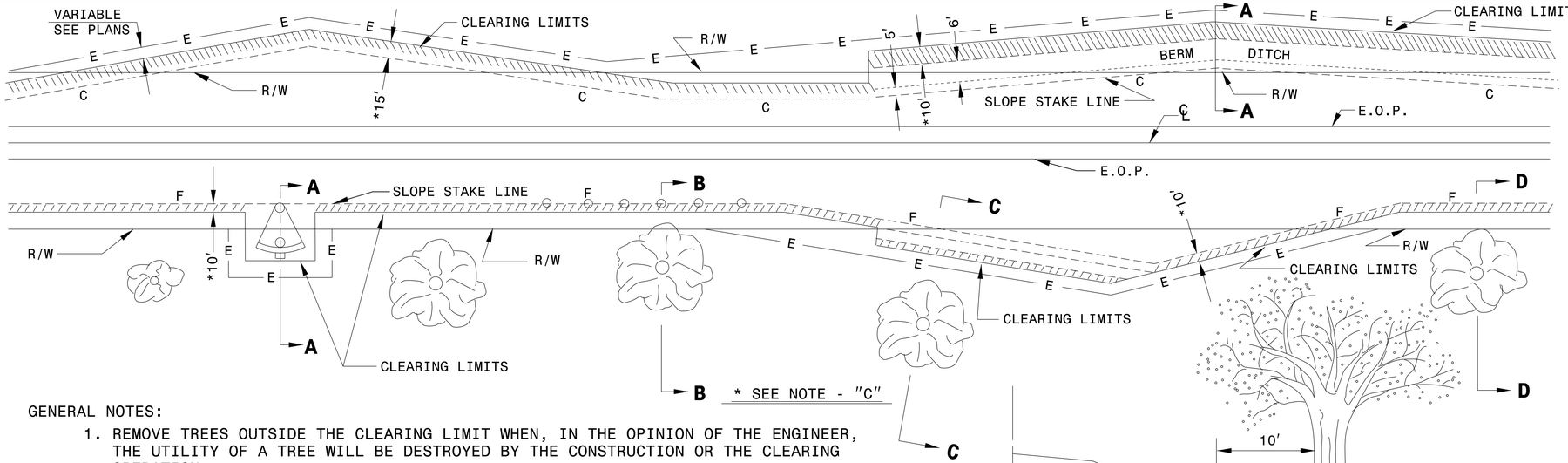

GENERAL NOTES:

1. REMOVE TREES OUTSIDE THE CLEARING LIMIT WHEN, IN THE OPINION OF THE ENGINEER, THE UTILITY OF A TREE WILL BE DESTROYED BY THE CONSTRUCTION OR THE CLEARING OPERATION.
2. CLEAR IN ACCORDANCE WITH THIS STANDARD EXCEPT WHERE ADDITIONAL CLEARING IS REQUIRED FOR SAFETY AS SHOWN ON THE PLANS.

METHOD III CLEARING LIMITS

(A) CUTS -- CLEAR TO CONSTRUCTION LIMITS.
(B) FILLS - CLEAR TO 5'/10' * BEYOND CONSTRUCTION LIMITS, UNLESS SPECIFIED OTHERWISE BY WETLAND PERMIT.
(C) CUTS AND FILLS - WHEN THE CLEARING LIMITS (A AND B) EXCEED THE PROPOSED R/W OR PROPOSED CONSTRUCTION EASEMENTS, THEN CLEAR ONLY TO THE R/W OR CONSTRUCTION EASEMENT WHICHEVER IS GREATER.

* FOR FILL HEIGHTS LESS THAN 10' CLEAR TO 5' BEYOND CONSTRUCTION LIMITS.
* FOR FILL HEIGHTS 10' OR GREATER CLEAR TO 10' BEYOND CONSTRUCTION LIMITS.
** PLACE SILT FENCE AT 5' BEYOND TOE OF SLOPE IN FILL SECTIONS WITH LESS THAN 10'. PLACE SILT FENCE AT 10' BEYOND TOE OF SLOPE IN FILL SECTIONS WITH 10' OR GREATER.

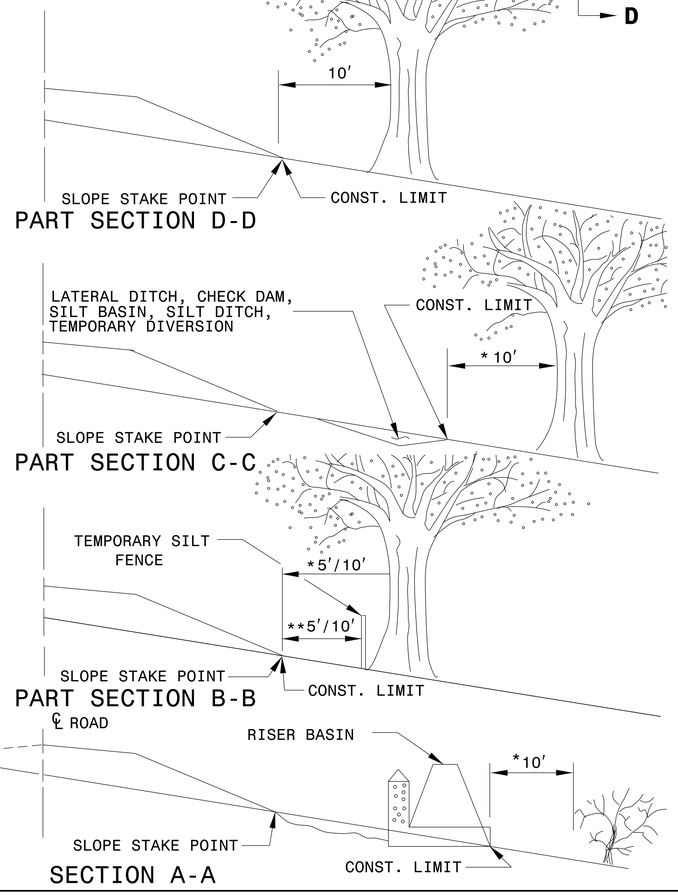

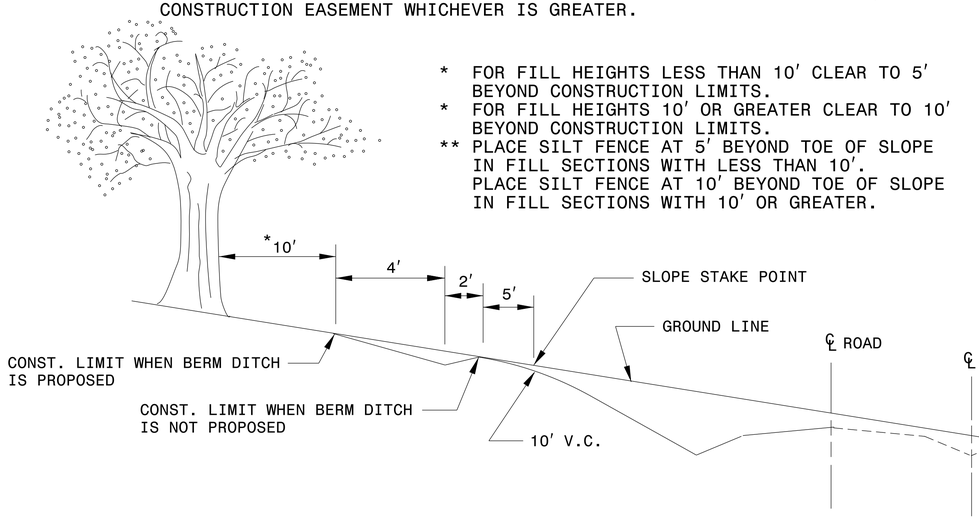

STATE OF NORTH CAROLINA
DEPT. OF TRANSPORTATION
DIVISION OF HIGHWAYS
RALEIGH, N.C.

ENGLISH DETAIL DRAWING FOR
METHOD OF CLEARING
MODIFIED METHOD - III

SHEET 1 OF 1
200D03

CONTRACT STANDARDS AND DEVELOPMENT UNIT
Office 919-707-6950 FAX 919-250-4119

SEE TITLE BLOCK

ORIGINAL BY:	T.S.S.	DATE:	FEB.2000
MODIFIED BY:	K.A.K.	DATE:	AUG.2016
CHECKED BY:		DATE:	
FILE SPEC.:	kkempf/english/0200d301.dgn		

5/14/99
$$$$SYSTIME$$$$
$$$$USERNAME$$$$

COMPUTED BY: J. CROOK	DATE: 12/14/2017
CHECKED BY: A. CONRAD	DATE: 12/15/2017

STATE OF NORTH CAROLINA
DIVISION OF HIGHWAYS

PROJECT REFERENCE NO.	SHEET NO.
17BP.3.R.60	3B-1

NOTE: Invert Elevations are for Bid Purposes only and shall not be used for project construction stakeout.
See "Standard Specifications For Roads and Structures, Section 300–5".

LIST OF PIPES, ENDWALLS, ETC. (FOR PIPES 48" & UNDER)

STATION / SIZE / THICKNESS OR GAUGE	LOCATION (LT,RT, OR CL)	STRUCTURE NO. FROM	STRUCTURE NO. TO	TOP ELEVATION	INVERT ELEVATION	INVERT ELEVATION	SLOPE CRITICAL	CLASS III R.C. PIPE (UNLESS NOTED OTHERWISE) 12"	15"	18"	24"	30"	36"	42"	48"	BITUMINOUS COATED C.S. PIPE TYPE B (UNLESS NOTED OTHERWISE) 12" .064	15" .064	18" .064	24" .064	30" .079	36" .079	42" .109	48" .109	CLASS III R.C. PIPE OR ALUMINIZED C.S. PIPE, TYPE IR OR HDPE PIPE, TYPE S OR D 12"	15"	18"	24"	30"	36"	42"	48"
20+40 -L-	RT	0401	—	106.78	—	—																									
		0401	OUT	—	104.03	103.6																			16'						
20+50 -L-	RT																														
TOTALS:																									16'						

STATION	15" SIDE DRAIN PIPE	18" SIDE DRAIN PIPE	24" SIDE DRAIN PIPE	ENDWALLS STD. 838.01, STD. 838.11 OR STD. 838.80 (UNLESS NOTED OTHERWISE) CU. YDS. R.C.P.	C.S.P.	QUANTITIES FOR DRAINAGE STRUCTURES * TOTAL L.F. FOR PAY QUANTITY SHALL BE COL. 'A' + (1.3 X COL.'B') PER EACH (0' THRU 5.0')	LIN. *FT. A 5.0' THRU 10.0'	B 10.0' AND ABOVE	C.B. STD. 840.01 OR STD. 840.02	FRAME, GRATES AND HOOD STANDARD 840.03 TYPE OF GRATE E	F	G			D.I. STD. 840.14 OR STD. 840.15	D.I. FRAME & GRATE STD. 840.16	G.D.I. TYPE "A" STD. 840.17 OR 840.26	G.D.I. TYPE "B" STD. 840.18 OR 840.27	G.D.I. TYPE "D" STD. 840.19 OR 840.28	G.D.I. FRAME WITH GRATE STD. 840.22	G.D.I. FRAME WITH TWO GRATES STD. 840.22	G.D.I. (N.S.) FRAME WITH GRATE STD. 840.24	G.D.I. (N.S.) FRAME WITH TWO GRATES STD. 840.24	J.B. STD. 840.31 OR 840.32	T.B.D.I (NS) WITH FRAME & TWO GRATES STD. 840.29	T.B GRATED DI, TYPE "B" STD. 840.35					CORR. STEEL ELBOWS NO. & SIZE	CONC. COLLARS CL. "B" C.Y. STD 840.72	CONC. & BRICK PIPE PLUG, C.Y. STD. 840.71	PIPE REMOVAL LIN. FT.	REMARKS
20+40 -L-						1																				1	1										
20+50 -L-																																				16'	
TOTALS:						1																				1	1									16'	

ABBREVIATIONS

C.B.	CATCH BASIN
N.D.I.	NARROW DROP INLET
D.I.	DROP INLET
G.D.I.	GRATED DROP INLET
G.D.I. (N.S.)	GRATED DROP INLET (NARROW SLOT)
J.B.	JUNCTION BOX
M.H.	MANHOLE
T.B.D.I.	TRAFFIC BEARING DROP INLET
T.B.J.B.	TRAFFIC BEARING JUNCTION BOX

"N" = DISTANCE FROM EDGE OF LANE TO FACE OF GUARDRAIL.
TOTAL SHOULDER WIDTH = DISTANCE FROM EDGE OF TRAVEL LANE TO SHOULDER BREAK POINT.
FLARE LENGTH = DISTANCE FROM LAST SECTION OF PARALLEL GUARDRAIL TO END OF GUARDRAIL.
W = TOTAL WIDTH OF FLARE FROM BEGINNING OF TAPER TO END OF GUARDRAIL.
G = GATING IMPACT ATTENUATOR TYPE 350
NG = NON-GATING IMPACT ATTENUATOR TYPE 350

GUARDRAIL SUMMARY

SURVEY LINE	BEG. STA.	END STA.	LOCATION	LENGTH STRAIGHT	LENGTH SHOP CURVED	LENGTH DOUBLE FACED	WARRANT POINT APPROACH END	WARRANT POINT TRAILING END	"N" DIST. FROM E.O.L.	TOTAL SHOUL. WIDTH	FLARE LENGTH APPROACH END	FLARE LENGTH TRAILING END	W APPROACH END	W TRAILING END	ANCHORS GREU TL-3	ANCHORS III									IMPACT ATTENUATOR TYPE 350 EA	G	NG	SINGLE FACED GUARDRAIL	REMOVE EXISTING GUARDRAIL	REMOVE AND STOCKPILE EXISTING GUARDRAIL	REMARKS
-L-	19+90.92	20+65.90	LT	75.00				20+65.90	5.42	8.42		50.00		1.00	1	1															
-L-	19+82.64	20+57.58	RT	75.00			20+57.58		5.42	8.42	50.00		1.00		1	1															
-L-	21+48.36	22+22.37	LT	75.00			21+48.36		5.42	8.42	50.00		1.00		1	1															
-L-	21+40.10	22+15.99	RT	75.00				21+40.10	5.42	8.42		50.00		1.00	1	1															
			SUBTOTALS	300.00											4	4															
			TYPE III, 4@18.75'	-75.00																											
			GREU TL-3, 4@50.00'	-200.00																											
			PROJECT TOTALS	25.00											4	4															
			SAY	25.00											4	4															
ADDITIONAL GUARDRAIL POSTS = 5 EA																															

SUMMARY OF EARTHWORK (CY)

LOCATION	UNCLASSIFIED EXCAVATION	UNDERCUT	EMBT + %	BORROW	WASTE
–L– 18+00.00 – 20+61.77	4		346	342	
–L– 21+44.23 – 24+50.00	11		413	402	
SUBTOTAL	15		759	744	
SUBTOTAL					
TOTAL	15		759	744	
PROJECT TOTAL	15		759	744	
EST. 5% TO REPLACE TOP SOIL ON BORROW PIT				37	
GRAND TOTAL	15		759	780	
SAY	20			800	

EST. DDE= 60 CY SELECT GRANULARY MATERIAL: 300 CY UNDERCUT: 300 CY

NOTE: Earthwork quantities are calculated by the Roadway Design Unit. These earthwork quantities are based in part on subsurface data provided by the Geotechnical Engineering Unit.

Note: Approximate quantities only. Unclassified Excavation, Borrow Excavation, Fine Grading, Clearing and Grubbing, and Removal of Existing Pavement will be paid for at the contract lump sum price for "Grading."

SUMMARY OF SHOULDER BERM GUTTER

SURVEY LINE	STATION	STATION	LENGTH
–L– RT	20+33.05	20+47.41	14.4
		TOTAL:	14.4
		SAY:	20

SUMMARY OF PAVEMENT REMOVAL (SY)

LINE	STATION – STATION	LOCATION	REMOVAL (SY)
–L–	STA. 19+55.00 TO STA. 20+74.83	CL	242
–L–	STA. 21+26.69 TO STA. 23+05.00	CL	365
GRAND TOTAL			607
SAY			610

6/21/00
-SYSTIME
-FILENAME: 17BP.3.R.60_Rdy_psh_3B1.dgn

DocuSign Envelope ID: 20EAAAC1-BB8F-427E-8DCC-9CB3AA2CAB56

5/14/99

BRIDGE PAVEMENT RELATIONSHIP SKETCH –L–

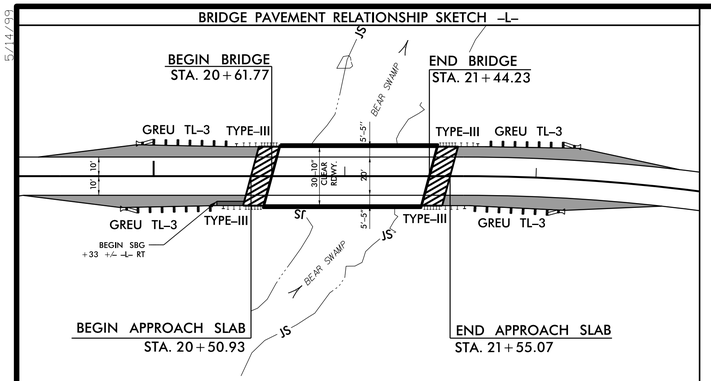

NOT TO SCALE

-L-
PI Sta 25+01.86
△ = 38° 58' 41.6" (RT)
D = 5° 58' 05.9"
L = 653.09'
T = 339.75'
R = 960.00'
E = 0.06
R0 = 120'
DS = 50 mph

PROJECT REFERENCE NO.	SHEET NO.
17BP.3.R.60	4
R/W SHEET NO.	

ROADWAY DESIGN ENGINEER
5/22/2018 11:36:54 AM EDT
NORTH CAROLINA PROFESSIONAL SEAL 033400 ENGINEER DAVID Z. KESSER
DocuSigned by: David Z. Kesser
5EFD0B0025EF8A04...

HYDRAULICS ENGINEER
5/22/2018 11:32:09 AM EDT
NORTH CAROLINA PROFESSIONAL SEAL 030405 ENGINEER D. C. PROFFITFIELD
DocuSigned by: D. C. Proffitfield
AE8D49EE8C0D44A...

CDM Smith — CDM Smith Inc. 5400 Glenwood Avenue Suite 400 Raleigh, NC 27612-3228 NC COA No. F-1255

SUMMIT Design and Engineering Services — Summit Design and Engineering Services 504 Meadowland Drive Hillsborough, NC 27278 NC FIRM LICENSE No: P-0339

DOCUMENT NOT CONSIDERED FINAL UNLESS ALL SIGNATURES COMPLETED

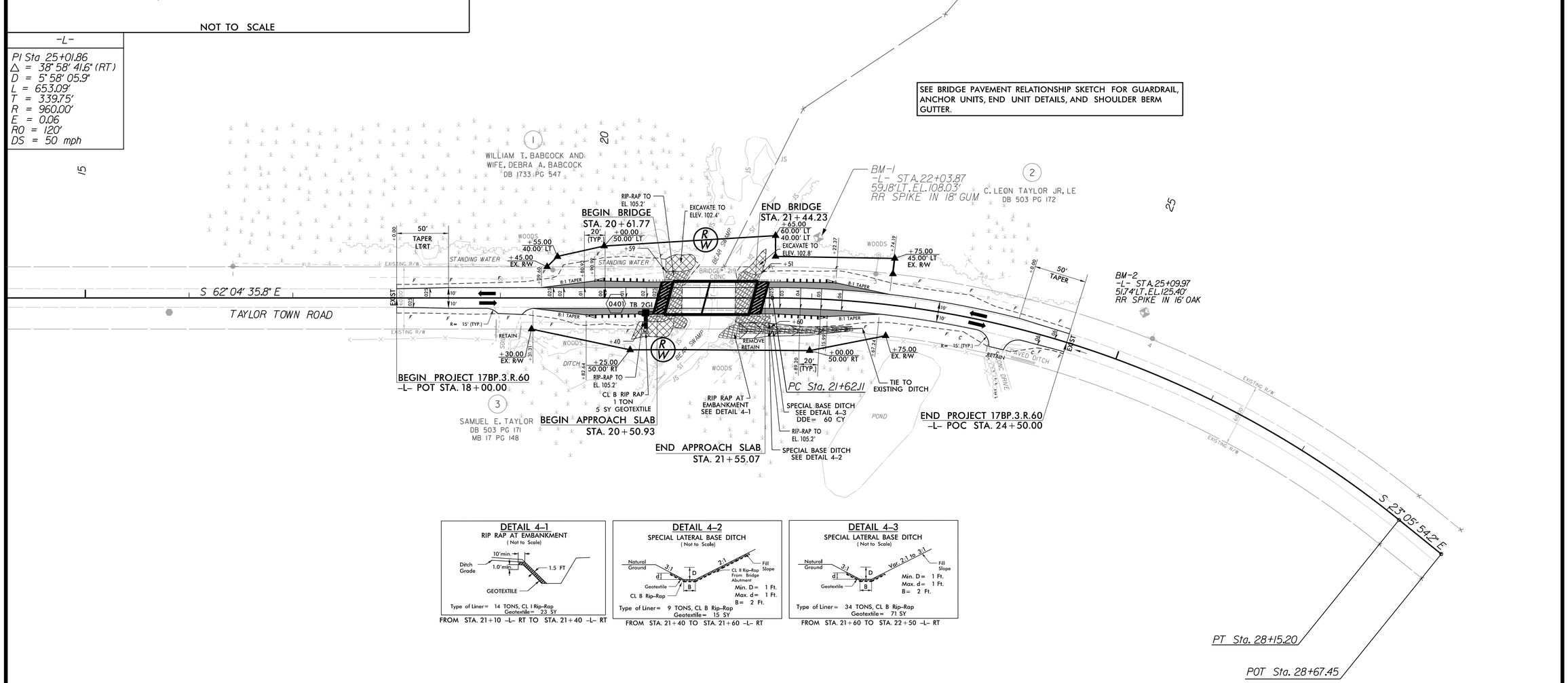

DETAIL 4-1
RIP RAP AT EMBANKMENT
(Not to Scale)

Type of Liner= 14 TONS, CL I Rip-Rap
Geotextile= 23 SY

FROM STA. 21+10 -L- RT TO STA. 21+40 -L- RT

DETAIL 4-2
SPECIAL LATERAL BASE DITCH
(Not to Scale)

Type of Liner= 9 TONS, CL B Rip-Rap
Geotextile= 15 SY

FROM STA. 21+40 TO STA. 21+60 -L- RT

DETAIL 4-3
SPECIAL LATERAL BASE DITCH
(Not to Scale)

Type of Liner= 34 TONS, CL B Rip-Rap
Geotextile= 71 SY

FROM STA. 21+60 TO STA. 22+50 -L- RT

50 25 0 50 100

PLANS

NOTE: SEE SHEET 5 FOR -L- PROFILE

-SYSTIME
USER: PCOLLINS

DocuSign Envelope ID: 20EAAAC1-BB8F-427E-8DCC-9CB3AA2CAB56

PROJECT REFERENCE NO.	SHEET NO.
17BP.3.R.60	5

ROADWAY DESIGN ENGINEER

NORTH CAROLINA PROFESSIONAL SEAL 033400 ENGINEER DAVID R. KEISER

5/22/2018 11:36:54 AM PDT

DocuSigned by: David R. Keiser 5EFD0B0025EB4D4...

HYDRAULICS ENGINEER

NORTH CAROLINA PROFESSIONAL SEAL 030405 ENGINEER D. C. WHITFIELD

5/22/2018 11:32:09 AM PDT

DocuSigned by: D. C. Whitfield AE8D494EB8CD44A...

CDM Smith — CDM Smith Inc. 5400 Glenwood Avenue Suite 400 Raleigh, NC 27612-3228 NC COA No. F-1255

SUMMIT Design and Engineering Services 504 Meadowland Drive Hillsborough, NC 27278 NC FIRM LICENSE No: P-0339

DOCUMENT NOT CONSIDERED FINAL UNLESS ALL SIGNATURES COMPLETED

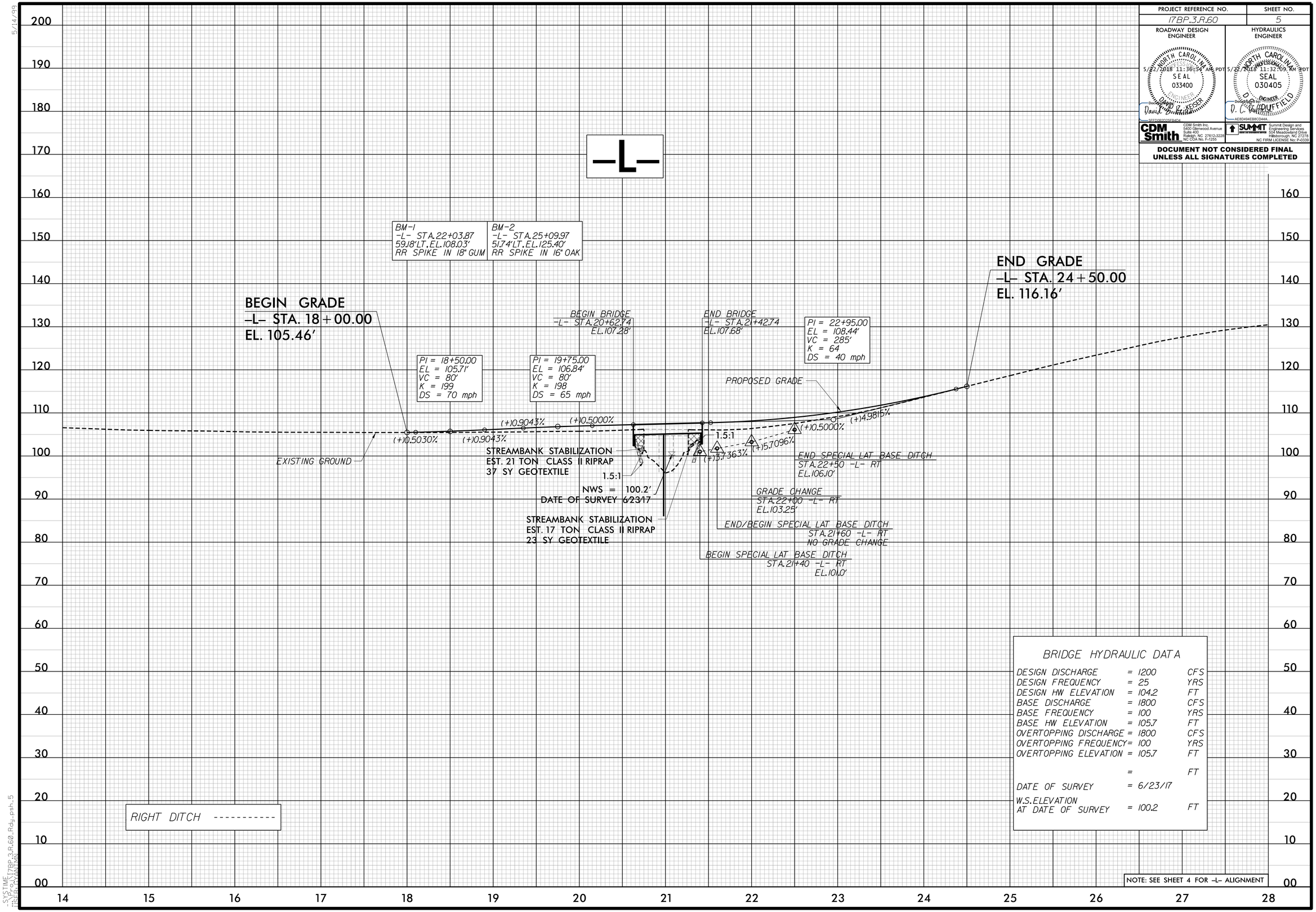

BRIDGE HYDRAULIC DATA

DESIGN DISCHARGE	= 1200	CFS
DESIGN FREQUENCY	= 25	YRS
DESIGN HW ELEVATION	= 104.2	FT
BASE DISCHARGE	= 1800	CFS
BASE FREQUENCY	= 100	YRS
BASE HW ELEVATION	= 105.7	FT
OVERTOPPING DISCHARGE	= 1800	CFS
OVERTOPPING FREQUENCY	= 100	YRS
OVERTOPPING ELEVATION	= 105.7	FT
	=	FT
DATE OF SURVEY	= 6/23/17	
W.S. ELEVATION AT DATE OF SURVEY	= 100.2	FT

5/14/99

-SYSTIME
-I:\PROJ\17BP.3.R.60_Rdy_psh_5
ttsFROY\ANMN

DocuSign Envelope ID: 20EAAAC1-BB8F-427E-8DCC-9CB3AA2CAB56

STATE OF NORTH CAROLINA
DIVISION OF HIGHWAYS

TRANSPORTATION MANAGEMENT PLAN

DUPLIN COUNTY

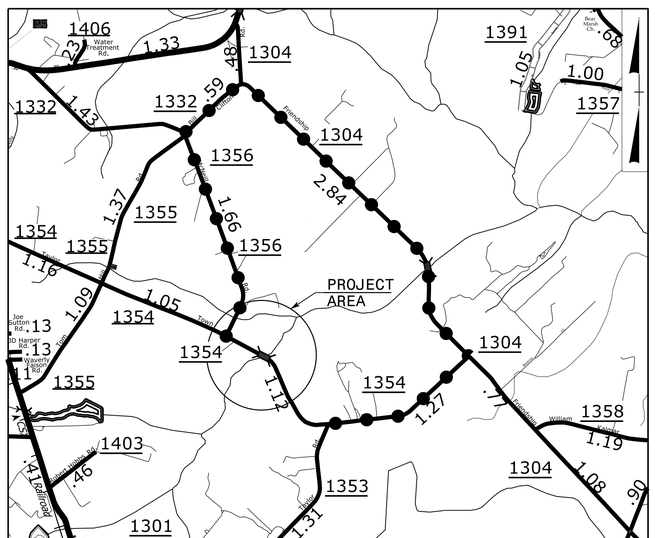

VICINITY MAP

DETOUR ROUTE ●●●● N.T.S.

LOCATION: REPLACE BRIDGE 219 OVER BEAR SWAMP ON SR 1354 (TAYLOR TOWN ROAD)

INDEX OF SHEETS

SHEET NO.	TITLE
TMP-1	TITLE SHEET, VICINITY MAP AND INDEX OF SHEETS
TMP-1A	LIST OF APPLICABLE ROADWAY STANDARD DRAWINGS, AND LEGEND
TMP-1B	TRANSPORTATION OPERATIONS PLAN: (MANAGEMENT STRATEGIES, GENERAL NOTES AND LOCAL NOTES)
TMP-2	OFF-SITE DETOUR
TMP-3	SIGN DESIGN

SHEET NO.
TMP-1

TIP PROJECT: I7BP.3.R.60

DOCUMENT NOT CONSIDERED FINAL UNLESS ALL SIGNATURES COMPLETED

WORK ZONE SAFETY & MOBILITY
"from the MOUNTAINS to the COAST"

PLANS PREPARED BY:

ADAM CONRAD, P.E.
PROJECT ENGINEER

JONATHAN CROOK, E.I.
PROJECT DESIGN ENGINEER

NCDOT CONTACTS:

J. S. KITE, P.E.
PROJECT ENGINEER

MATTHEW SPRINGER, P.E.
PROJECT DESIGN ENGINEER

DIVISION OF HIGHWAYS · STATE OF NORTH CAROLINA · DEPARTMENT OF TRANSPORTATION · WORK ZONE TRAFFIC CONTROL

CDM Smith
CDM Smith Inc.
5400 Glenwood Avenue
Suite 400
Raleigh, NC 27612-3228
NC COA No. F-1255

APPROVED: DocuSigned by: Adam M. Conrad 312C25CC73204E1...

DATE: 5/22/2018 11:33:11 AM PDT

SEAL

NORTH CAROLINA PROFESSIONAL SEAL 043767 ENGINEER ADAM M. CONRAD

$$$$SYSTIME$$$$
$$$$USERNAME$$$$
$$$$DGN$$$$

DocuSign Envelope ID: 20EAAAC1-BB8F-427E-8DCC-9CB3AA2CAB56

PROJ. REFERENCE NO.	SHEET NO.
17BP.3.R.60	TMP-1A

ROADWAY STANDARD DRAWINGS

THE FOLLOWING ROADWAY STANDARDS AS SHOWN IN "ROADWAY STANDARD DRAWINGS" - PROJECT SERVICES UNIT - N.C. DEPARTMENT OF TRANSPORTATION - RALEIGH, N.C., DATED JANUARY 2018 ARE APPLICABLE TO THIS PROJECT AND BY REFERENCE HEREBY ARE CONSIDERED A PART OF THESE PLANS:

STD. NO.	TITLE
1101.03	TEMPORARY ROAD CLOSURES
1101.11	TRAFFIC CONTROL DESIGN TABLES
1110.01	STATIONARY WORK ZONE SIGNS
1145.01	BARRICADES

LEGEND

GENERAL

- DIRECTION OF TRAFFIC FLOW
- DIRECTION OF PEDESTRIAN TRAFFIC FLOW
- EXIST. PVMT.
- NORTH ARROW
- PROPOSED PVMT.
- TEMP. SHORING (LOCATION PURPOSES ONLY)

SIGNALS

- EXISTING
- PROPOSED
- TEMPORARY

PAVEMENT MARKINGS

- EXISTING LINES
- TEMPORARY LINES

TRAFFIC CONTROL DEVICES

- BARRICADE (TYPE III)
- CONE
- DRUM
- SKINNY DRUM
- TUBULAR MARKER
- TEMPORARY CRASH CUSHION
- FLASHING ARROW BOARD
- FLAGGER
- LAW ENFORCEMENT
- TRUCK MOUNTED ATTENUATOR (TMA)
- CHANGEABLE MESSAGE SIGN

TEMPORARY SIGNING

- PORTABLE SIGN
- STATIONARY SIGN
- STATIONARY OR PORTABLE SIGN

PAVEMENT MARKERS

- CRYSTAL/CRYSTAL
- CRYSTAL/RED
- YELLOW/YELLOW

PAVEMENT MARKING SYMBOLS

- PAVEMENT MARKING SYMBOLS

CDM Smith
CDM Smith Inc.
5400 Glenwood Avenue
Suite 400
Raleigh, NC 27612-3228
NC COA No. F-1255

APPROVED: Docusigned by: Adam M. Conrad 312C25CC73204E1...

DATE: 5/22/2018 11:33:11 AM PDT

SEAL

NORTH CAROLINA PROFESSIONAL SEAL 043767 ENGINEER ADAM M. CONRAD

DOCUMENT NOT CONSIDERED FINAL UNLESS ALL SIGNATURES COMPLETED

DIVISION OF HIGHWAYS STATE OF NORTH CAROLINA DEPARTMENT OF TRANSPORTATION WORK ZONE TRAFFIC CONTROL

ROADWAY STANDARD DRAWINGS & LEGEND

$$$$$SYSTIME$$$$
$$$$$$$$$$$$$DGN$$$$$$$$$$$$$$$
$$$USERNAME$$$

DocuSign Envelope ID: 20EAAAC1-BB8F-427E-8DCC-9CB3AA2CAB56

PROJ. REFERENCE NO.	SHEET NO.
17BP.3.R.60	TMP-1B

MANAGEMENT STRATEGIES

1- CLOSE SR 1354 (TAYLOR TOWN ROAD) TO TRAFFIC AND DETOUR TRAFFIC OFF-SITE.

2- LOCAL ACCESS TO ALL RESIDENCES AND BUSINESSES WILL BE MAINTAINED BETWEEN CLOSURE POINTS AT ALL TIMES DURING CONSTRUCTION.

GENERAL NOTES

CHANGES MAY BE REQUIRED WHEN PHYSICAL DIMENSIONS IN THE DETAIL DRAWINGS, STANDARD DETAILS, AND ROADWAY DETAILS ARE NOT ATTAINABLE TO MEET FIELD CONDITIONS OR RESULT IN DUPLICATE OR UNDESIRED OVERLAPPING OF DEVICES. MODIFICATION MAY INCLUDE: MOVING, SUPPLEMENTING, COVERING, OR REMOVAL OF DEVICES AS DIRECTED BY THE ENGINEER.

THE FOLLOWING GENERAL NOTES APPLY AT ALL TIMES FOR THE DURATION OF THE CONSTRUCTION PROJECT EXCEPT WHEN OTHERWISE NOTED IN THE PLAN OR DIRECTED BY THE ENGINEER.

TRAFFIC PATTERN ALTERATIONS

A) NOTIFY THE ENGINEER THIRTY (30) CALENDAR DAYS PRIOR TO ANY TRAFFIC PATTERN ALTERATION.

SIGNING

B) INSTALL ADVANCE WORK ZONE WARNING SIGNS WHEN WORK IS WITHIN 40 FT FROM THE EDGE OF TRAVEL LANE AND NO MORE THAN THREE (3) DAYS PRIOR TO THE BEGINNING OF CONSTRUCTION.

C) PROVIDE SIGNING AND DEVICES REQUIRED TO CLOSE THE ROAD ACCORDING TO THE ROADWAY STANDARD DRAWINGS AND TRAFFIC CONTROL PLANS.

PROVIDE SIGNING REQUIRED FOR THE OFF-SITE DETOUR ROUTE AS SHOWN IN THE TRAFFIC CONTROL PLANS.

D) COVER OR REMOVE ALL SIGNS AND DEVICES REQUIRED TO CLOSE THE ROAD WHEN ROAD CLOSURE IS NOT IN OPERATION.

COVER OR REMOVE ALL SIGNS REQUIRED FOR THE OFF-SITE DETOUR WHEN THE DETOUR IS NOT IN OPERATION.

E) ENSURE ALL NECESSARY SIGNING IS IN PLACE PRIOR TO ALTERING ANY TRAFFIC PATTERN.

TRAFFIC CONTROL DEVICES

F) PLACE TYPE III BARRICADES, WITH "ROAD CLOSED" SIGN R11-2 ATTACHED, OF SUFFICIENT LENGTH TO CLOSE ENTIRE ROADWAY.

PHASING

STEP 1: USING RSD 1101.03 (SHEET 1 OF 9), INSTALL DETOUR ROUTE SIGNING TO CLOSE SR 1354 (TAYLOR TOWN ROAD) FROM STA. 18+00+/- TO STA. 24+50+/- -L-.

STEP 2: AWAY FROM TRAFFIC, COMPLETE CONSTRUCTION OF PROPOSED BRIDGE AND ROADWAY APPROACHES, INCLUDING DRAINAGE, GUARDRAIL, FINAL PAVEMENT MARKINGS AND MARKERS ON PROPOSED -L- FROM STA. 18+00+/- TO STA. 24+50+/-.

STEP 3: REMOVE TEMPORARY TRAFFIC CONTROL DEVICES AND OPEN -L- TO PROPOSED 2-LANE, 2-WAY TRAFFIC PATTERN.

LOCAL NOTES

1- NOTIFY DUPLIN COUNTY EMERGENCY SERVICES AND PUBLIC SCHOOLS AT LEAST ONE MONTH PRIOR TO ROAD CLOSURE.

CDM Smith
CDM Smith Inc.
5400 Glenwood Avenue
Suite 400
Raleigh, NC 27612-3228
NC COA No. F-1255

APPROVED: DocuSigned by: Adam M. Conrad 312C25CC73204E1...
DATE: 5/22/2018 11:33:11 AM PDT
SEAL

NORTH CAROLINA PROFESSIONAL SEAL 043767 ENGINEER ADAM M. CONRAD

DOCUMENT NOT CONSIDERED FINAL UNLESS ALL SIGNATURES COMPLETED

DIVISION OF HIGHWAYS · STATE OF NORTH CAROLINA · DEPARTMENT OF TRANSPORTATION · WORK ZONE TRAFFIC CONTROL

TRANSPORTATION OPERATIONS PLAN

5/21/2018
P:\\:\OK\cdmsmith.com:PW_PLN\Documents\117240\219637\0 Transportation\04 Client Folder Structure\17BP.3.R.60\Traffic\TrafficControl\TCP\17BP.3.R.60_TMP_TC01B.dgn
User:GYANTMN

DocuSign Envelope ID: 20EAAAC1-BB8F-427E-8DCC-9CB3AA2CAB56

PROJ. REFERENCE NO.	SHEET NO.
17BP.3.R.60	TMP-2

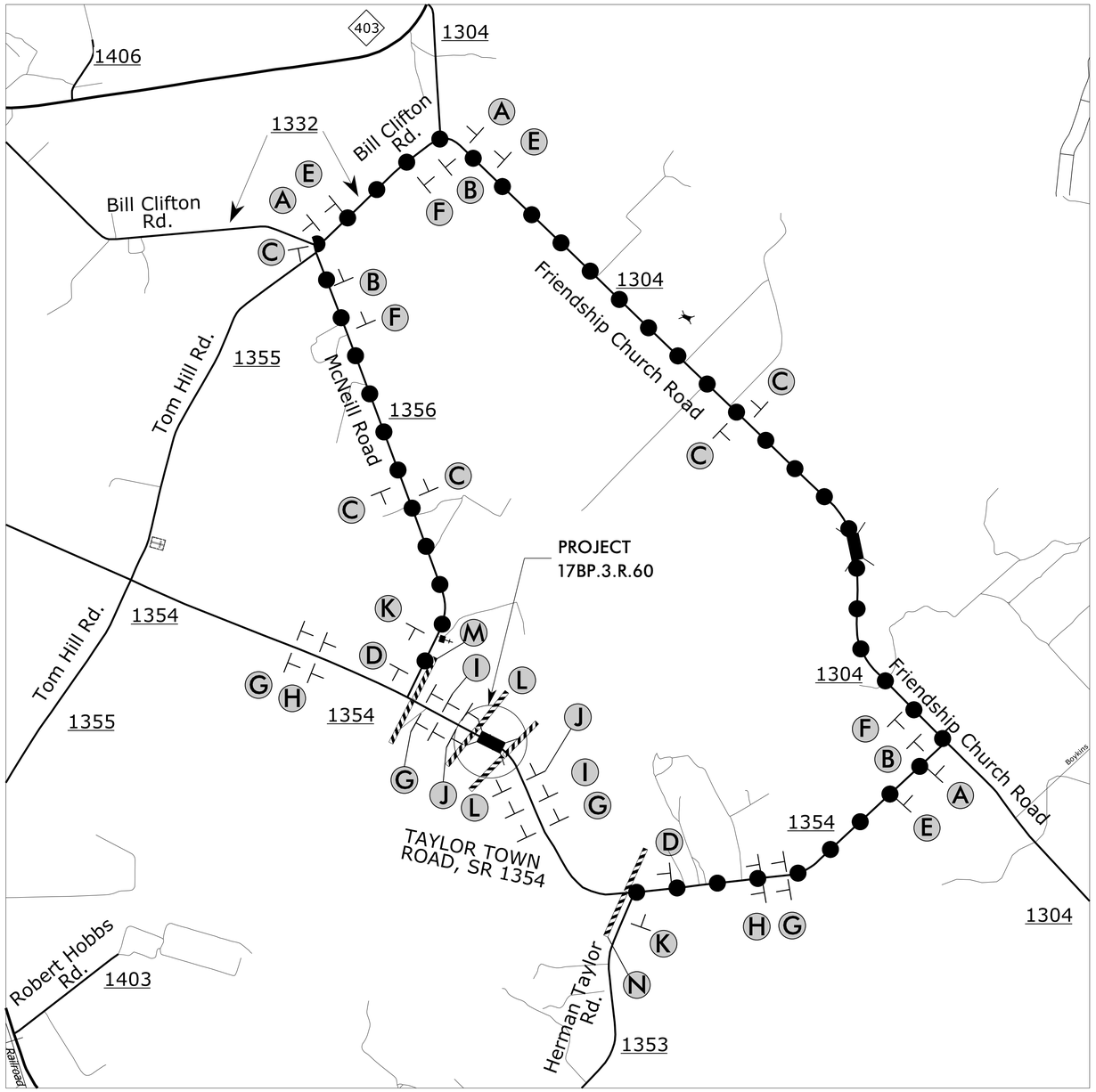

OFF-SITE DETOUR ROUTE

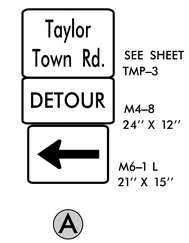

A

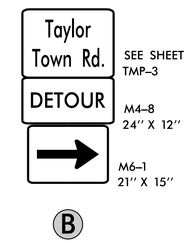

B

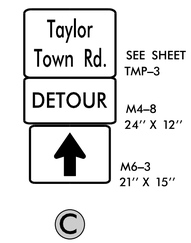

C

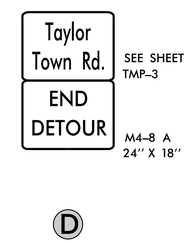

D

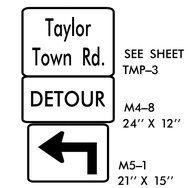

E

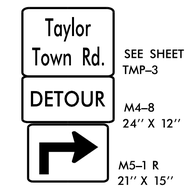

F

G

H

I

J

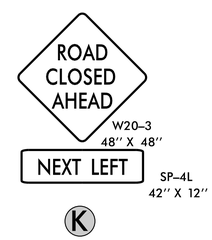

K

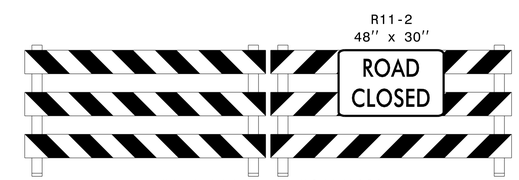

TYPE III BARRICADE(S)

L

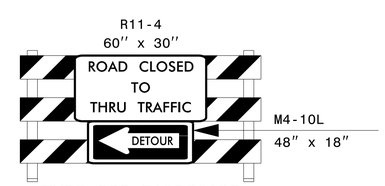

M

TYPE III BARRICADE

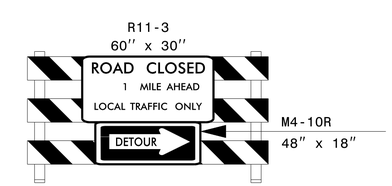

N

TYPE III BARRICADE

APPROVED: DocuSigned by: Adam M. Conrad 312C25CC73204E1...

DATE: 5/22/2018 11:33:11 AM PDT

SEAL

NORTH CAROLINA PROFESSIONAL SEAL 043767 ENGINEER ADAM M. CONRAD

DIVISION OF HIGHWAYS · STATE OF NORTH CAROLINA · DEPARTMENT OF TRANSPORTATION · WORK ZONE TRAFFIC CONTROL

CDM Smith

CDM Smith Inc.
5400 Glenwood Avenue
Suite 400
Raleigh, NC 27612-3228
NC COA No. F-1255

DOCUMENT NOT CONSIDERED FINAL UNLESS ALL SIGNATURES COMPLETED

OFF–SITE DETOUR

5/21/2018
pw:\\cdmsmith.com:PW_PLN\Documents\117240\219637\10 Transportation\04 Client Folder Structure\17BP.3.R.60\Traffic\TrafficControl\TCP\17BP.3.R.60_TMP_TC02.dgn
User:GYANTMN

DocuSign Envelope ID: 20EAAAC1-BB8F-427E-8DCC-9CB3AA2CAB56

PROJ. REFERENCE NO.	SHEET NO.
17BP.3.R.60	TMP-3

SIGN NUMBER: 1
TYPE: STATIONARY
QUANTITY: SEE PLANS

BACKG COLOR: Orange
COPY COLOR: Black

SYMBOL	X	Y	WID	HT

SIGN WIDTH: 2′-6″
HEIGHT: 1′-6″
TOTAL AREA: 3.8 Sq.Ft.

BORDER TYPE: FLUSH
RECESS: 0.38″
WIDTH: 0.5″
RADII: 1.5″

NO. Z BARS:
LENGTH:

MAT′L: 0.063″ (1.6 mm) ALUMINUM

DESIGN BY: AMC
CHECKED BY: KAP
Jan 19, 2018
PROJECT ID: 17BP.3.R.60
LOCATION: DUPLIN
DIV: 3

USE NOTES:

1. Legend and border(except those that are colored black) shall be direct applied Grade B sheeting.
2. Background shall be Grade B reflective sheeting.
3. Shields; A, B, and C type arrows shall be on 0.032″ (0.8mm) aluminum and demountable.
4. Bottom panel shall be yellow Grade C sheeting. Legend shall be direct applied black non-reflective sheeting. Yellow panel is:

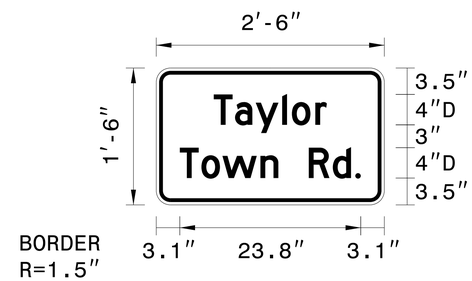

BORDER
R=1.5″
TH=0.5″
IN=0.38″

Panel Style: Traffic Control.ssi
M.U.T.C.D.: 2009 Edition

Spacing Factor is 1 unless specified otherwise

LETTER POSITIONS

Letter locations are panel edge to lower left corner

																										Series/Size Text Length
	T	a	y	l	o	r																				D 2000
	7.6	10.4	13.1	16.6	17.8	20.9																				14.9
	T	o	w	n		R	d	.																		D 2000
	3.1	5.9	8.7	13.7	16.1	20.1	23.2	26.2																		23.8

FILENAME: 17BP.3.R.60_TMP_TC03

NORTH CAROLINA D.O.T. SIGN DETAIL

CDM Smith
CDM Smith Inc.
5400 Glenwood Avenue
Suite 400
Raleigh, NC 27612-3228
NC COA No. F-1255

APPROVED: DocuSigned by: Adam M. Conrad 312C25CC72204E1...
DATE: 5/22/2018 11:33:11 AM PDT
SEAL

NORTH CAROLINA PROFESSIONAL SEAL 043767 ENGINEER ADAM M. CONRAD

DOCUMENT NOT CONSIDERED FINAL UNLESS ALL SIGNATURES COMPLETED

DIVISION OF HIGHWAYS · STATE OF NORTH CAROLINA · DEPARTMENT OF TRANSPORTATION · WORK ZONE TRAFFIC CONTROL

SIGN DESIGN

5/21/2018
9:41:10 cdmsmith.com:PW_PLN\Documents\117240\219637\10 Transportation\04 Client Folder Structure\17BP.3.R.60\Traffic\TrafficControl\TCP\17BP.3.R.60_TMP_TC03.dgn
User:GYANTWN

DocuSign Envelope ID: 20EAAAC1-BB8F-427E-8DCC-9CB3AA2CAB56

TIP NO.	SHEET NO.
17BP.3.R.60	PMP-1

APPROVED: Adam M. Conrad
DATE: 5/22/2018 11:33:11 AM PDT

SEAL
NORTH CAROLINA PROFESSIONAL SEAL 043767 ENGINEER ADAM M. CONRAD

DOCUMENT NOT CONSIDERED FINAL UNLESS ALL SIGNATURES COMPLETED

CDM Smith
CDM Smith Inc.
5400 Glenwood Avenue
Suite 400
Raleigh, NC 27612-3228
NC COA No. F-1255

T.I.P.: 17BP.3.R.60

STATE OF NORTH CAROLINA
DEPARTMENT OF TRANSPORTATION

PAVEMENT MARKING PLAN

DUPLIN COUNTY

LOCATION: SR 1354 (TAYLOR TOWN ROAD) OVER BEAR SWAMP

ROADWAY STANDARD DRAWING

THE FOLLOWING ROADWAY STANDARDS AS APPEAR IN "ROADWAY STANDARD DRAWINGS" - PROJECT SERVICES UNIT - N.C. DEPARTMENT OF TRANSPORTATION - RALEIGH, N.C., DATED JANUARY 2018 ARE APPLICABLE TO THIS PROJECT AND BY REFERENCE HEREBY ARE CONSIDERED A PART OF THESE PLANS:

STD. NO.	TITLE
1205.01	PAVEMENT MARKINGS - LINE TYPES AND OFFSETS
1205.02	PAVEMENT MARKINGS - TWO-LANE AND MULTILANE ROADWAYS
1205.12	PAVEMENT MARKINGS - BRIDGES
1250.01	RAISED PAVEMENT MARKERS - INSTALLATION SPACING
1251.01	RAISED PAVEMENT MARKERS - PERMANENT AND TEMPORARY
1261.01	GUARDRAIL AND BARRIER DELINEATORS - INSTALLATION SPACING
1261.02	GUARDRAIL AND BARRIER DELINEATORS - TYPES AND MOUNTING
1262.01	GUARDRAIL END DELINEATION

GENERAL NOTES

THE FOLLOWING GENERAL NOTES APPLY AT ALL TIMES FOR THE DURATION OF THE CONSTRUCTION PROJECT, EXCEPT WHEN OTHERWISE NOTED IN THE PLAN, OR DIRECTED BY THE ENGINEER.

A) INSTALL PAVEMENT MARKINGS AND PAVEMENT MARKERS ON THE FINAL SURFACE AS FOLLOWS:

ROAD NAME	MARKING	MARKER
TAYLOR TOWN ROAD	PAINT	PERMANENT RAISED

B) PLACE TWO APPLICATIONS OF PAINT PAVEMENT MARKINGS ON THE FINAL WEARING SURFACE. PLACE THE SECOND APPLICATION OF PAINT UPON SUFFICIENT DRYING TIME OF THE FIRST.

C) TIE PROPOSED PAVEMENT MARKING LINES TO EXISTING PAVEMENT MARKING LINES.

D) REMOVE/REPLACE ANY CONFLICTING/DAMAGED PAVEMENT MARKINGS AND MARKERS.

E) MARKERS SHALL BE INSTALLED ACCORDING TO THE NCDOT ROADWAY STANDARD DRAWING 1250.01.

SUMMARY OF QUANTITIES

ITEM NO. DESC. NO.	ITEM NO. SECT. NO.	ITEM DESCRIPTION	QUANTITY	UNIT
4810000000	1205	PAINT PAVEMENT MARKING LINES (4")	5,200	L.F.
4900000000	1251	PERMANENT RAISED PAVEMENT MARKERS	10	EA.

INDEX

SHEET NO.	DESCRIPTION
PMP-1	PAVEMENT MARKING PLAN TITLE SHEET
PMP-2	PAVEMENT MARKING DETAIL

PLAN PREPARED BY: CDM SMITH, INC.

DAVID Z. KEISER, P. E. — PROJECT MANAGER
ADAM M. CONRAD, P. E. — PROJECT DESIGN ENGINEER

CDM Smith
CDM Smith Inc.
5400 Glenwood Avenue
Suite 400
Raleigh, NC 27612-3228
NC COA No. F-1255

PLAN REVIEWED BY: N.C.D.O.T. DIVISION 3

JESSI LEONARD, P.E. — DIVISION TRAFFIC ENGINEER
KEVIN G. BOWEN, P.E. — DIVISION CONSTRUCTION ENGINEER

STATE OF NORTH CAROLINA DEPARTMENT OF TRANSPORTATION

DocuSign Envelope ID: 20EAAAC1-BB8F-427E-8DCC-9CB3AA2CAB56

TIP NO.	SHEET NO.
17BP.3.R.60	PMP-2

APPROVED: DocuSigned by: Adam M. Conrad 312C25CC73204E1...

DATE: 5/22/2018 11:33:11 AM PDT

SEAL

NORTH CAROLINA PROFESSIONAL SEAL 043767 ENGINEER ADAM M. CONRAD

DOCUMENT NOT CONSIDERED FINAL UNLESS ALL SIGNATURES COMPLETED

CDM Smith
CDM Smith Inc.
5400 Glenwood Avenue
Suite 400
Raleigh, NC 27612-3228
NC COA No. F-1255

PAVEMENT MARKING SCHEDULE

SYMBOL	DESCRIPTION
PAINT(4")	
PA	WHITE EDGELINE
PI	YELLOW DOUBLE CENTER
PERMANENT RAISED PAVEMENT MARKERS	
MA	YELLOW & YELLOW

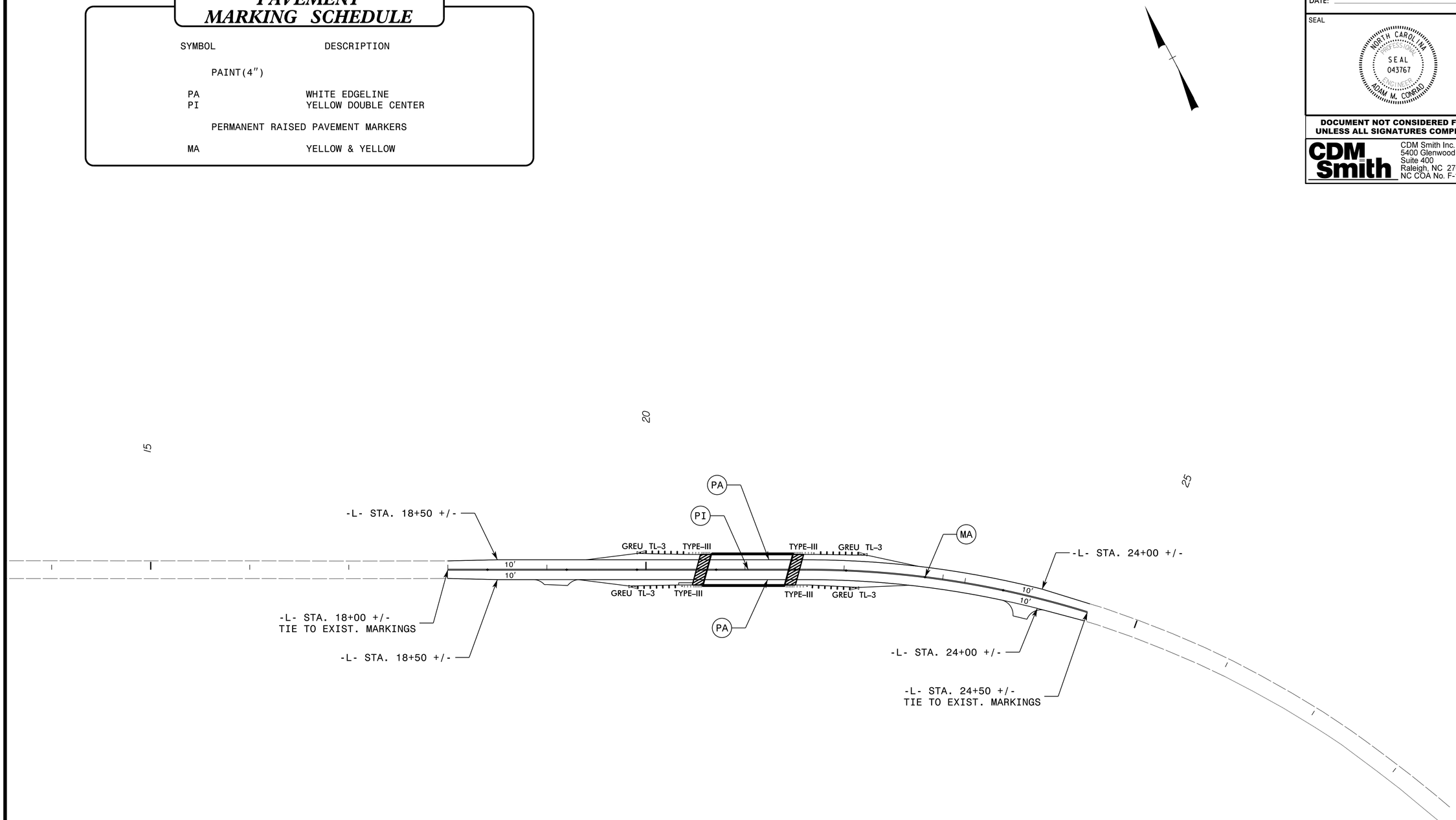

PAVEMENT MARKING DETAIL

TIP PROJECT: 17BP.3.R.60

STATE	STATE PROJECT REFERENCE NO.	SHEET NO.	TOTAL SHEETS
N.C.	17BP.3.R.60	EC-1	7

STATE PROJ. NO.	F.A. PROJ. NO.	DESCRIPTION

STATE OF NORTH CAROLINA
DIVISION OF HIGHWAYS

PLAN FOR PROPOSED
HIGHWAY EROSION CONTROL

DUPLIN COUNTY

LOCATION: REPLACE BRIDGE 219 OVER BEAR SWAMP ON SR 1354 (TAYLOR TOWN ROAD)

TYPE OF WORK: GRADING, DRAINAGE, PAVING, SIGNING AND STRUCTURE

NAD 83/NA 2011

TO US 117
FAISON

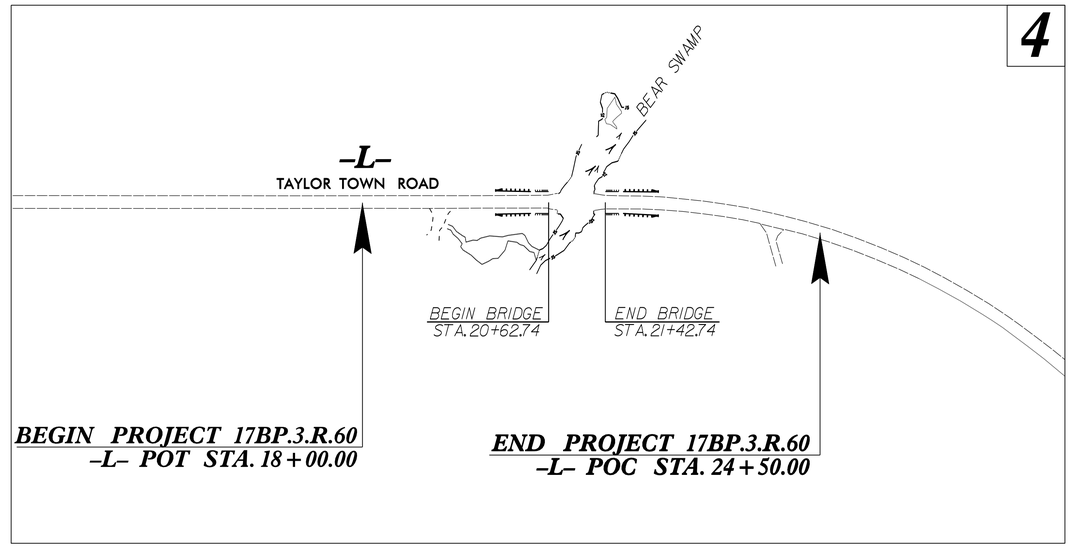

TO FRIENDSHIP CHURCH ROAD

EROSION AND SEDIMENT CONTROL MEASURES

Std. #	Description	Symbol
1630.03	Temporary Silt Ditch	TSD
1630.05	Temporary Diversion	TD
1605.01	Temporary Silt Fence	
1606.01	Special Sediment Control Fence	
1622.01	Temporary Berms and Slope Drains	
1630.02	Silt Basin Type B	
1633.01	Temporary Rock Silt Check Type-A	
	Temporary Rock Silt Check Type-A with Matting and Polyacrylamide (PAM)	
1633.02	Temporary Rock Silt Check Type-B	
	Wattle/ Coir Fiber Wattle	EW CFW
	Wattle/ Coir Fiber Wattle with Polyacrylamide (PAM)	
1634.01	Temporary Rock Sediment Dam Type-A	
1634.02	Temporary Rock Sediment Dam Type-B	
1635.01	Rock Pipe Inlet Sediment Trap Type-A	
1635.02	Rock Pipe Inlet Sediment Trap Type-B	
1630.04	Stilling Basin	
1630.06	Special Stilling Basin	
	Rock Inlet Sediment Trap:	
1632.01	Type A	A
1632.02	Type B	B
1632.03	Type C	C
	Skimmer Basin	
	Tiered Skimmer Basin	
	Infiltration Basin	

THIS PROJECT CONTAINS EROSION CONTROL PLANS FOR CLEARING AND GRUBBING PHASE OF CONSTRUCTION.

GRAPHIC SCALE

50 25 0 50 100
PLANS

50 25 0 50 100
PROFILE (HORIZONTAL)

10 5 0 10 20
PROFILE (VERTICAL)

THESE EROSION AND SEDIMENT CONTROL PLANS COMPLY WITH THE REGULATIONS SET FORTH BY THE NCG-010000 GENERAL CONSTRUCTION PERMIT EFFECTIVE AUGUST 1, 2016 AND ISSUED BY THE NORTH CAROLINA DEPARTMENT OF ENVIRONMENTAL QUALITY DIVISION OF WATER RESOURCES.

Prepared in the Office of:

SUMMIT DESIGN AND ENGINEERING SERVICES FIRM NO. P-0339
504 Meadowland Drive
Hillsborough, NC 27278-8551
Voice: (919) 732-3883
Fax: (919) 732-6776
www.summitde.net

Designed by:

DAN DUFFIELD, PE — *NAME*
3481 — *LEVEL III CERTIFICATION NO.*

Reviewed in the Office of:

ROADSIDE ENVIRONMENTAL UNIT
1 South Wilmington St.
Raleigh, NC 27611

2018 STANDARD SPECIFICATIONS

Reviewed by:

MARK STALEY, CPESC, CPSWQ

Roadway Standard Drawings

The following roadway english standards as appear in "Roadway Standard Drawings"- Roadway Design Unit - N. C. Department of Transportation - Raleigh, N. C., dated January 2018 and the latest revison thereto are applicable to this project and by reference hereby are considered a part of these plans.

1604.01	Railroad Erosion Control Detail	1632.01	Rock Inlet Sediment Trap Type A
1605.01	Temporary Silt Fence	1632.02	Rock Inlet Sediment Trap Type B
1606.01	Special Sediment Control Fence	1632.03	Rock Inlet Sediment Trap Type C
1607.01	Gravel Construction Entrance	1633.01	Temporary Rock Silt Check Type A
1622.01	Temporary Berms and Slope Drains	1633.02	Temporary Rock Silt Check Type B
1630.01	Riser Basin	1634.01	Temporary Rock Sediment Dam Type A
1630.02	Silt Basin Type B	1634.02	Temporary Rock Sediment Dam Type B
1630.03	Temporary Silt Ditch	1635.01	Rock Pipe Inlet Sediment Trap Type A
1630.04	Stilling Basin	1635.02	Rock Pipe Inlet Sediment Trap Type B
1630.05	Temporary Diversion	1640.01	Coir Fiber Baffle
1630.06	Special Stilling Basin	1645.01	Temporary Stream Crossing
1631.01	Matting Installation		

17-MAY-2018 09:18
jbjumper18
3082219_EC_tsh.dgn

PROJECT REFERENCE NO.	SHEET NO.
17BP.3.R.60	EC-2
R/W SHEET NO.	____
ROADWAY DESIGN ENGINEER	HYDRAULICS ENGINEER

CDM Smith
CDM Smith Inc.
5400 Glenwood Avenue
Suite 400
Raleigh, NC 27612-3228
NC CDA No. F-1255

SUMMIT Design and Engineering Services
504 Meadowland Drive
Hillsborough, NC 27278
NC FIRM LICENSE No: P-0339

COIR FIBER WATTLE DETAIL

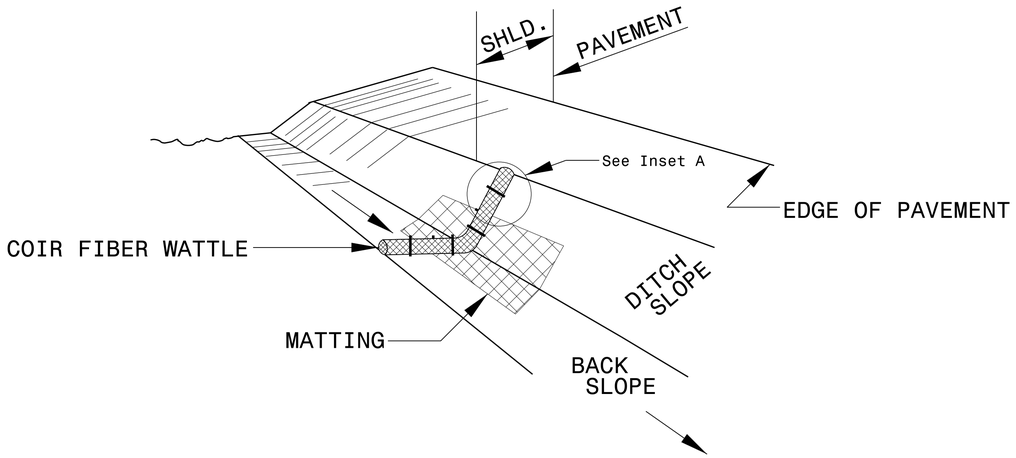

ISOMETRIC VIEW

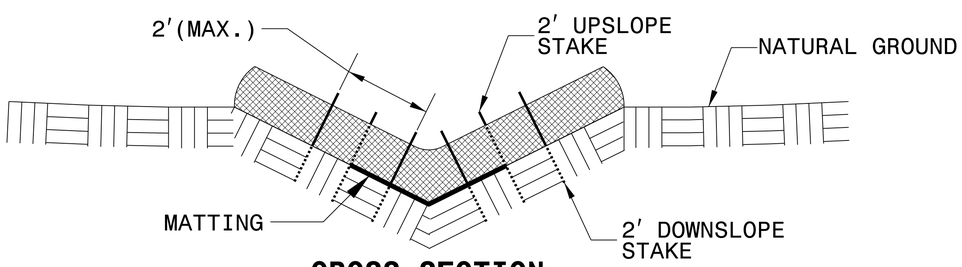

CROSS SECTION VEE DITCH

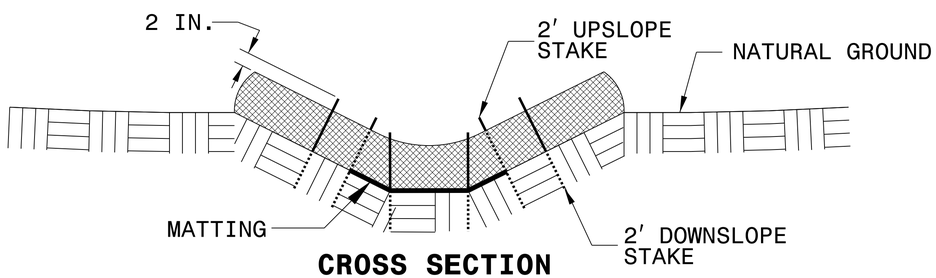

CROSS SECTION TRAPEZOIDAL DITCH

NOTES:

USE MINIMUM 12 IN. DIAMETER COIR FIBER (COCONUT FIBER) WATTLE.

USE 2 FT. WOODEN STAKES WITH A 2 IN. BY 2 IN. NOMINAL CROSS SECTION.

ONLY INSTALL WATTLE(S) TO A HEIGHT IN DITCH SO FLOW WILL NOT WASH AROUND WATTLE AND SCOUR DITCH SLOPES AND AS DIRECTED.

INSTALL A MINIMUM OF 2 UPSLOPE STAKES AND 4 DOWNSLOPE STAKES AT AN ANGLE TO WEDGE WATTLE TO BOTTOM OF DITCH.

PROVIDE STAPLES MADE OF 0.125 IN. DIAMETER STEEL WIRE FORMED INTO A U SHAPE NOT LESS THAN 12" IN LENGTH.

INSTALL STAPLES APPROXIMATELY EVERY 1 LINEAR FOOT ON BOTH SIDES OF WATTLE AND AT EACH END TO SECURE IT TO THE SOIL.

INSTALL MATTING IN ACCORDANCE WITH SECTION 1631 OF THE STANDARD SPECIFICATIONS.

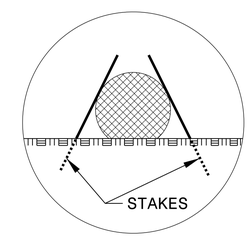

INSET A

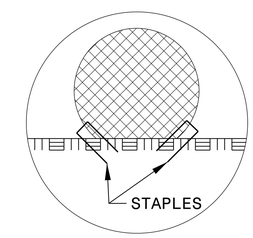

INSET B

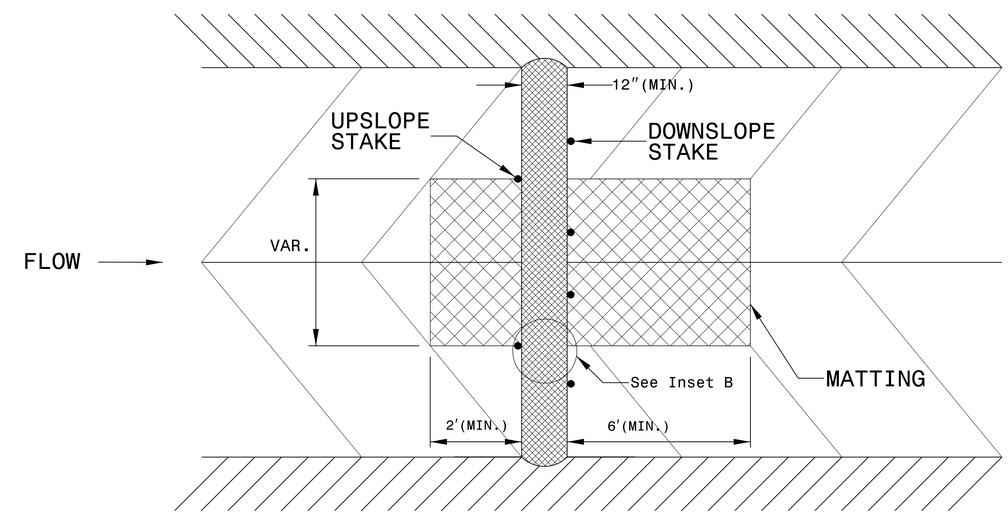

TOP VIEW

PROJECT REFERENCE NO.	SHEET NO.
17BP.3.R.59	EC-2A
R/W SHEET NO.	____
ROADWAY DESIGN ENGINEER	HYDRAULICS ENGINEER

SILT FENCE COIR FIBER WATTLE BREAK DETAIL

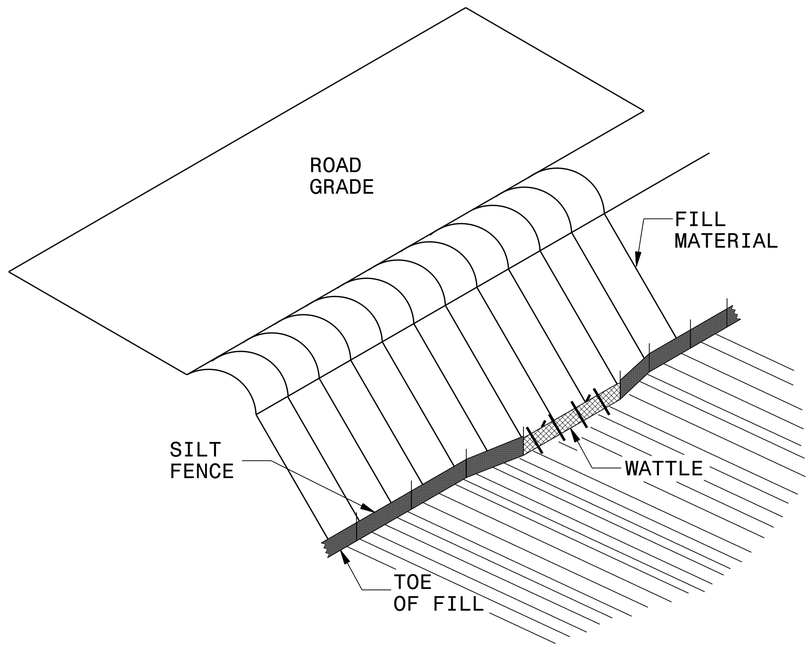

ISOMETRIC VIEW

NOTES:

USE MINIMUM 12 IN. DIAMETER EXCELSIOR WATTLE AND LENGTH OF 10 FT.

EXCAVATE A 1 TO 2 INCH TRENCH FOR WATTLE TO BE PLACED.

DO NOT PLACE WATTLE ON TOE OF SLOPE.

USE 2 FT. WOODEN STAKES WITH A 2 IN. BY 2 IN. NOMINAL CROSS SECTION.

INSTALL A MINIMUM OF 2 UPSLOPE STAKES AND 4 DOWNSLOPE STAKES AT AN ANGLE TO WEDGE WATTLE TO GROUND.

PROVIDE STAPLES MADE OF 0.125 IN. DIAMETER STEEL WIRE FORMED INTO A U SHAPE NOT LESS THAN 12″ IN LENGTH.

INSTALL STAPLES APPROXIMATELY EVERY 1 LINEAR FOOT ON BOTH SIDES OF WATTLE AND AT EACH END TO SECURE IT TO THE SOIL.

WATTLE INSTALLATION CAN BE ON OUTSIDE OF THE SILT FENCE AS DIRECTED.

INSTALL TEMPORARY SILT FENCE IN ACCORDANCE WITH SECTION 1605 OF THE STANDARD SPECIFICATIONS.

INSET A

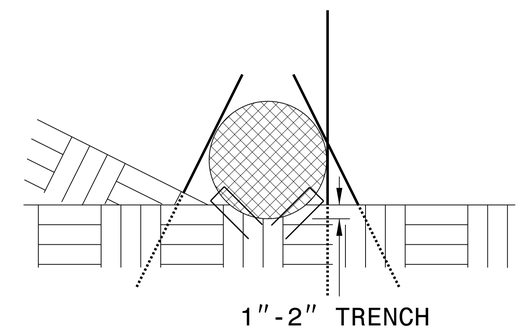

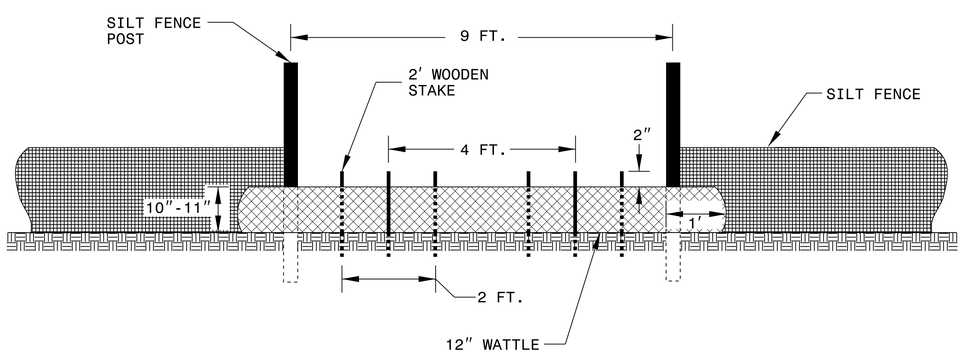

VIEW FROM SLOPE

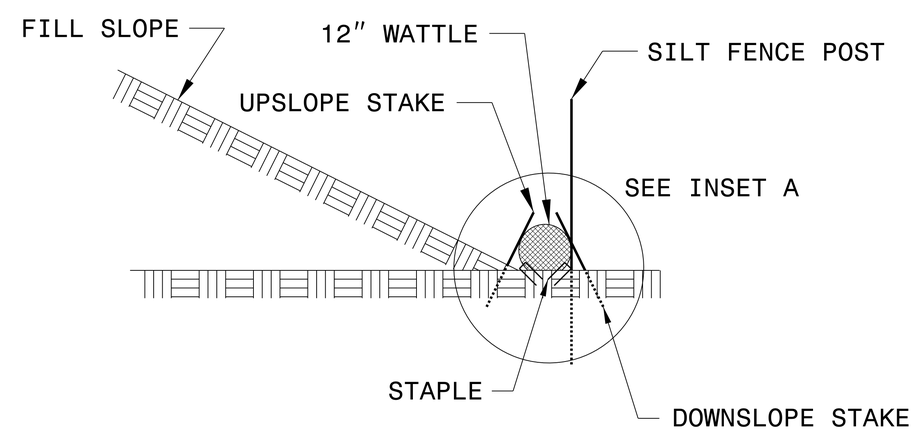

SIDE VIEW

PROJECT REFERENCE NO.	SHEET NO.
17BP.3.R.60	EC-3
ROADWAY DESIGN ENGINEER	HYDRAULICS ENGINEER

CDM Smith
CDM Smith Inc.
5400 Glenwood Avenue
Suite 400
Raleigh, NC 27612-3228
NC CDA No. F-1255

SUMMIT Design and Engineering Services
504 Meadowland Drive
Hillsborough, NC 27278
NC FIRM LICENSE No: P-0339

DIVISION OF HIGHWAYS
STATE OF NORTH CAROLINA

SOIL STABILIZATION TIMEFRAMES

SITE DESCRIPTION	STABILIZATION TIME	TIMEFRAME EXCEPTIONS
PERIMETER DIKES, SWALES, DITCHES AND SLOPES	7 DAYS	NONE
HIGH QUALITY WATER (HQW) ZONES	7 DAYS	NONE
SLOPES STEEPER THAN 3:1	7 DAYS	IF SLOPES ARE 10' OR LESS IN LENGTH AND ARE NOT STEEPER THAN 2:1, 14 DAYS ARE ALLOWED.
SLOPES 3:1 OR FLATTER	14 DAYS	7 DAYS FOR SLOPES GREATER THAN 50' IN LENGTH.
ALL OTHER AREAS WITH SLOPES FLATTER THAN 4:1	14 DAYS	NONE, EXCEPT FOR PERIMETERS AND HQW ZONES.

PROJECT REFERENCE NO.	SHEET NO.
17BP.3.R.60	EC-4/CONST.4
R/W SHEET NO.	
ROADWAY DESIGN ENGINEER	HYDRAULICS ENGINEER

CDM Smith
CDM Smith Inc.
5400 Glenwood Avenue
Suite 400
Raleigh, NC 27612-3228
NC COA No. F-1255

SUMMIT Design and Engineering Services
504 Meadowland Drive
Hillsborough, NC 27278
NC FIRM LICENSE No: P-0339

NOTE:
UTILIZE TEMPORARY SEDIMENT BASIN OR SPECIAL STILLING BASIN(S) AS STILLING BASIN WHERE APPLICABLE.

CLEARING AND GRUBBING
EROSION CONTROL FOR
CONSTRUCTION SHEET 4

NOTE:
PLACE TEMPORARY ROCK SEDIMENT DAMS TYPE – B AND TEMPORARY ROCK SILT CHECKS TYPE – A AT DRAINAGE OUTLETS.

NOTE:
PERIMETER EROSION CONTROL MEASURES SHALL BE INSTALLED DURING CLEARING AND GRUBBING PHASE.

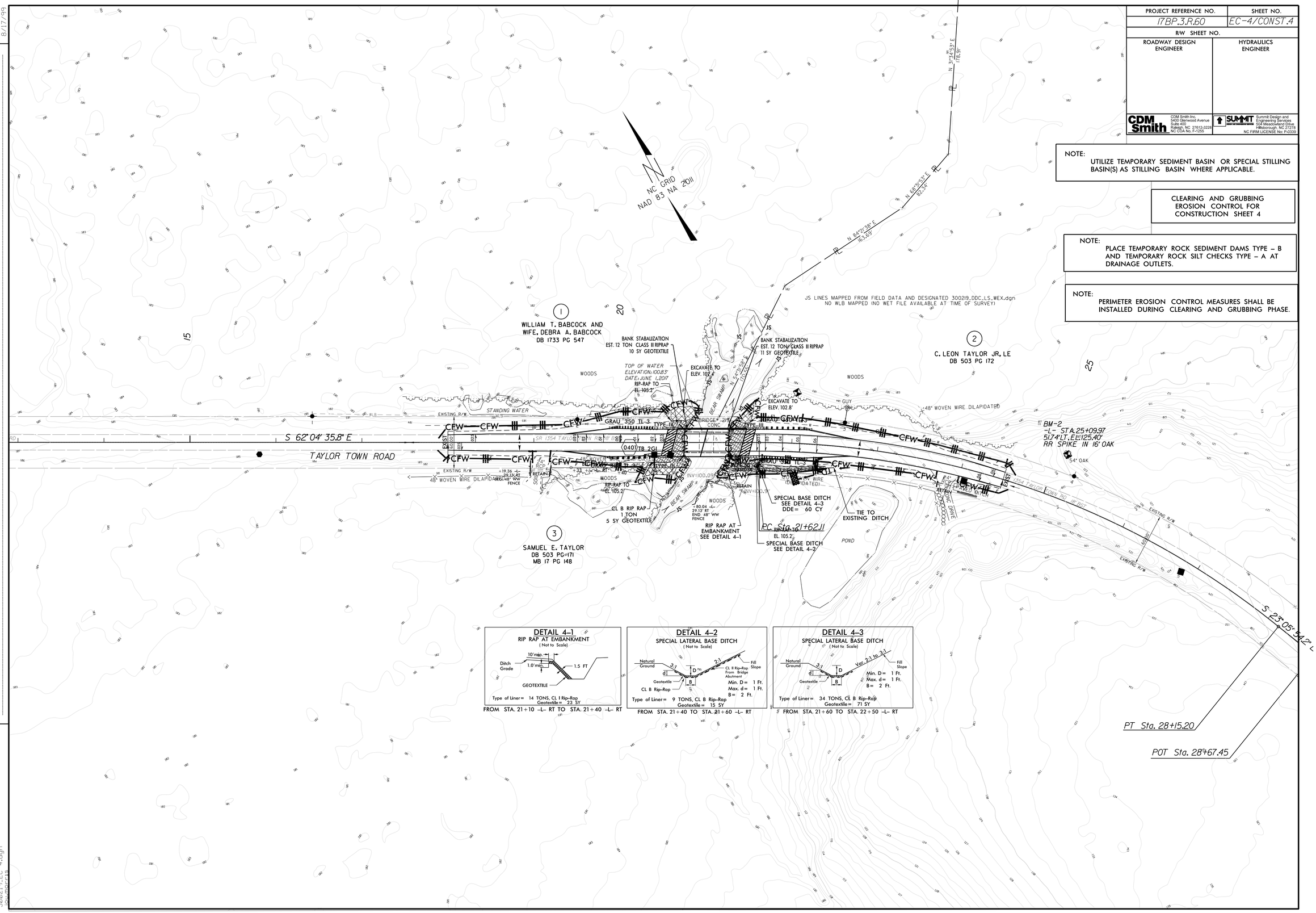

REVISIONS

8/17/99

23 MAY 2018 17:27
300219_EC-4.dgn
ddumorris

PROJECT REFERENCE NO.	SHEET NO.
17BP.3.R.60	EC-5/CONST.4
R/W SHEET NO.	
ROADWAY DESIGN ENGINEER	HYDRAULICS ENGINEER

CDM Smith
CDM Smith Inc.
5400 Glenwood Avenue
Suite 400
Raleigh, NC 27612-3228
NC COA No. F-1255

SUMMIT Design and Engineering Services
Summit Design and Engineering Services
504 Meadowland Drive
Hillsborough, NC 27278
NC FIRM LICENSE No: P-0339

NOTE:
UTILIZE TEMPORARY SEDIMENT BASIN OR SPECIAL STILLING BASIN(S) AS STILLING BASIN WHERE APPLICABLE.

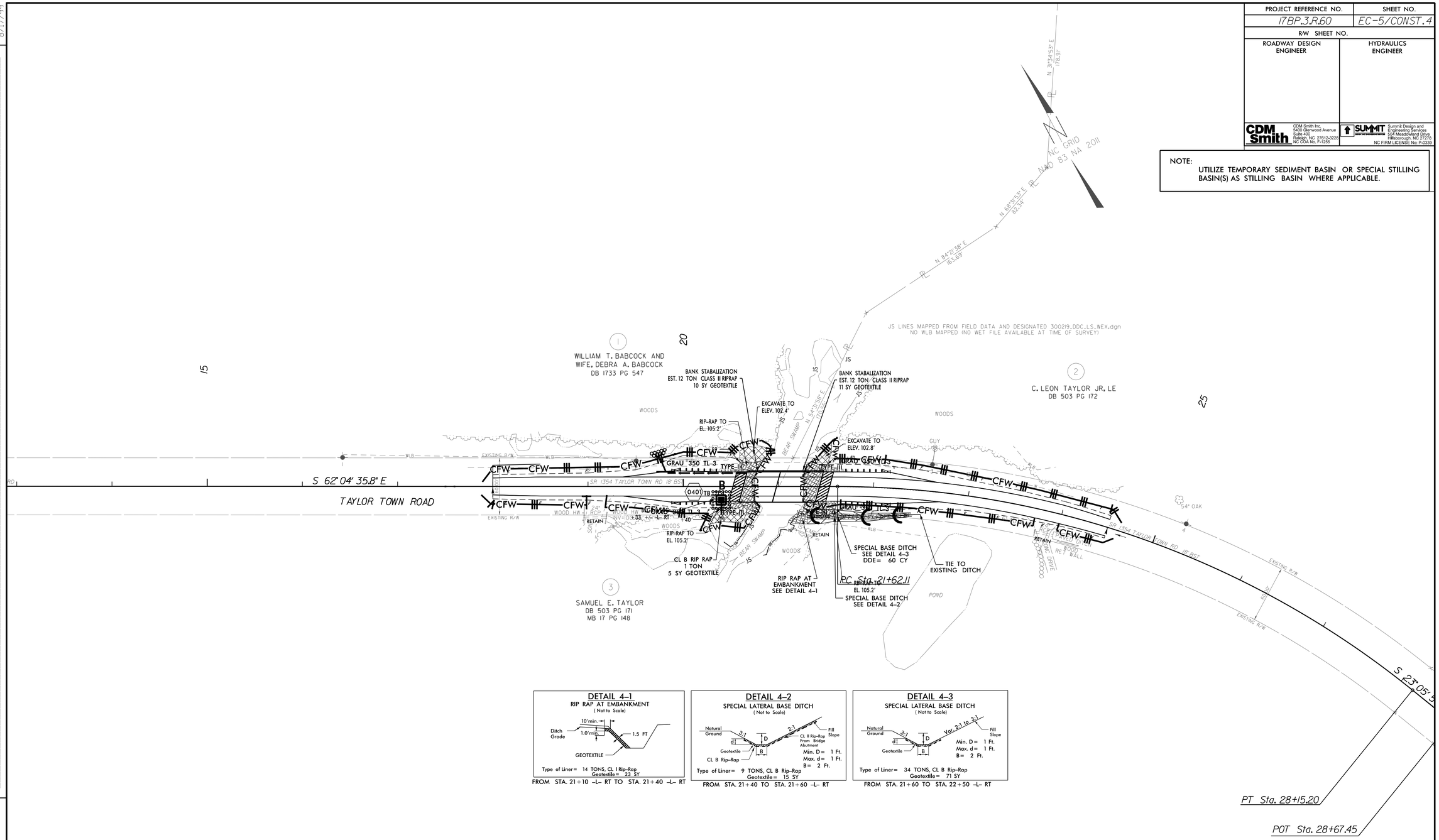

DETAIL 4-1
RIP RAP AT EMBANKMENT
(Not to Scale)

Type of Liner= 14 TONS, CL I Rip-Rap
Geotextile= 23 SY

FROM STA. 21+10 -L- RT TO STA. 21+40 -L- RT

DETAIL 4-2
SPECIAL LATERAL BASE DITCH
(Not to Scale)

Type of Liner= 9 TONS, CL B Rip-Rap
Geotextile= 15 SY

FROM STA. 21+40 TO STA. 21+60 -L- RT

DETAIL 4-3
SPECIAL LATERAL BASE DITCH
(Not to Scale)

Type of Liner= 34 TONS, CL B Rip-Rap
Geotextile= 71 SY

FROM STA. 21+60 TO STA. 22+50 -L- RT

REVISIONS

8/17/99

23 MAY 2018 17:27
300219_ED5.dgn
DOLMORRIS

CROSS SECTION SHEET INDEX

X–1 CROSS SECTION SHEET INDEX
X–2 THRU X–5 –L–

Note: "Quantities are approximate only. The Resident Engineer will re–cross–section the work accurately when the project is staked out. These cross–section notes will be used in computing the final quantities for which the contractor will be paid."

5/28/99
-SYSTIME
-SYSTIME
17BP.3.R.60_Rdy_X1.dgn

0 2.5 5	PROJ. REFERENCE NO.	SHEET NO.
	17BP.3.R.60	X-2

Note: Approximate quantities only. Unclassified Excavation, Borrow Excavation, Fine Grading, Clearing and Grubbing, and Removal of Existing Pavement will be paid for at the contract lump sum price for "Grading."

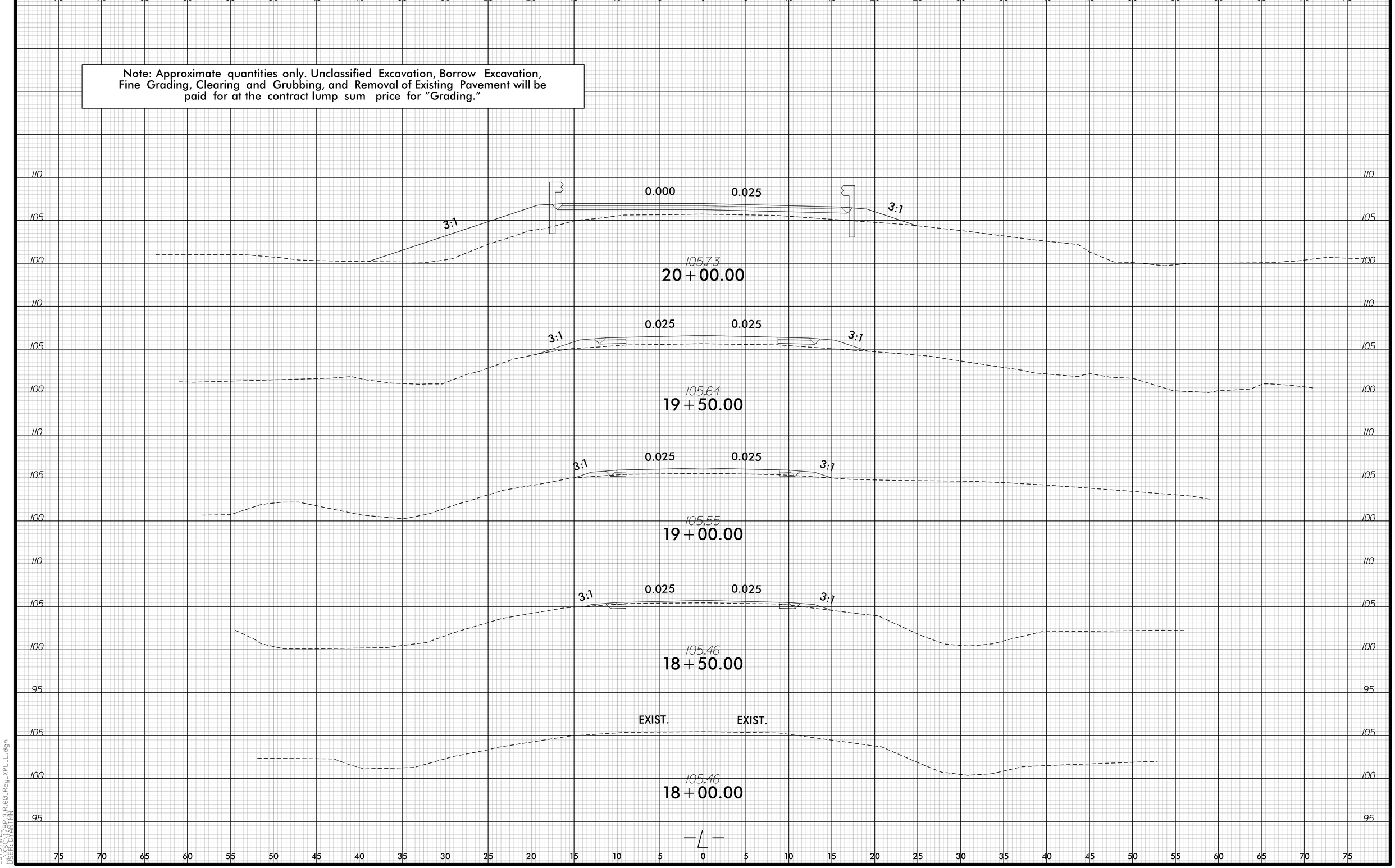

8/23/99

SYSTIME
17BP.3.R.60_Rdy_XPL_L.dgn
USER: CYARTON

0 2.5 5	PROJ. REFERENCE NO.	SHEET NO.
	17BP.3.R.60	X-3

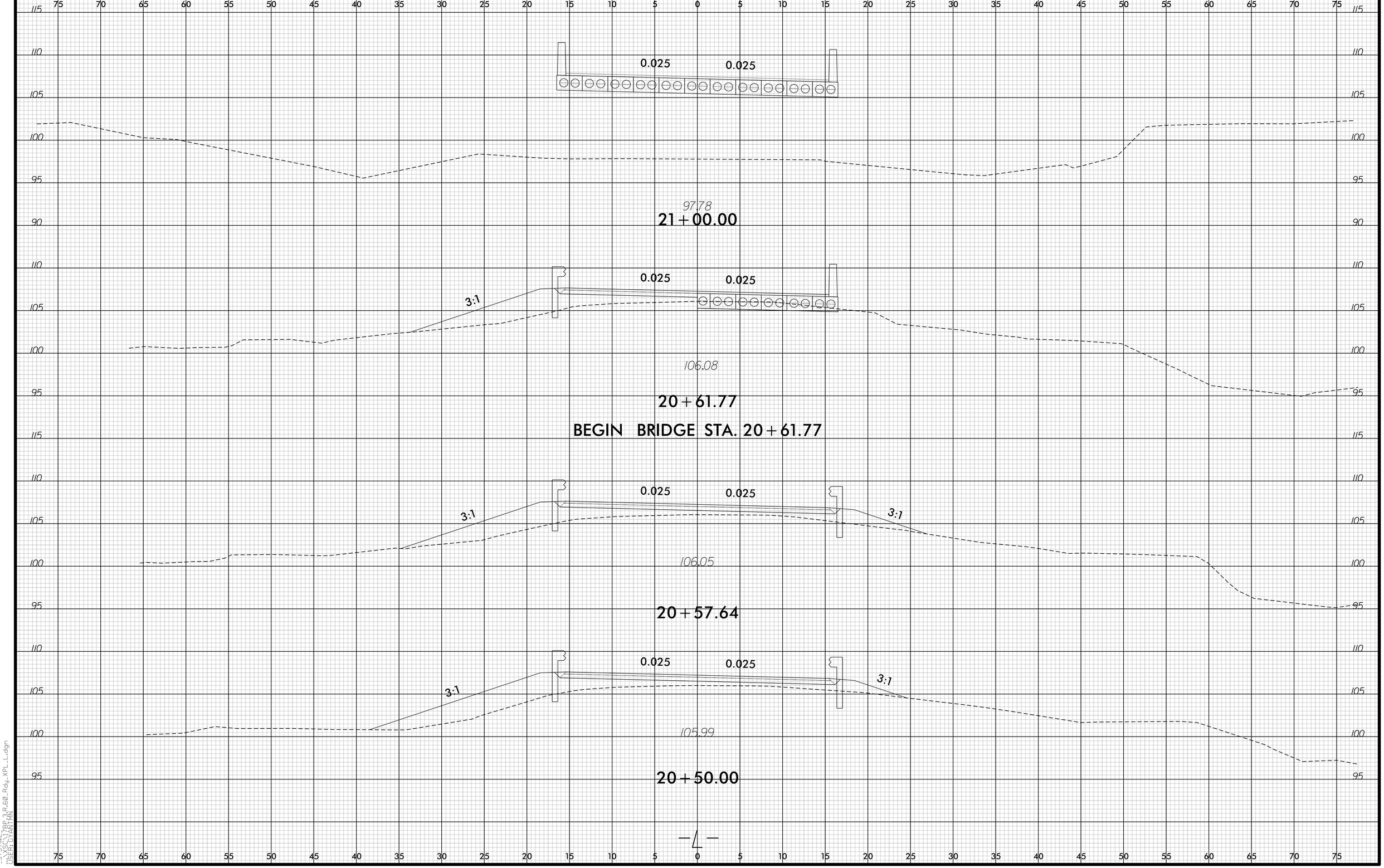

8/23/99
SYSTIME = 17BP.3.R.60_Rdg_XPL_L.dgn
USER: CYARTON

8/23/99

0 2.5 5	PROJ. REFERENCE NO.	SHEET NO.
	17BP.3.R.60	X-4

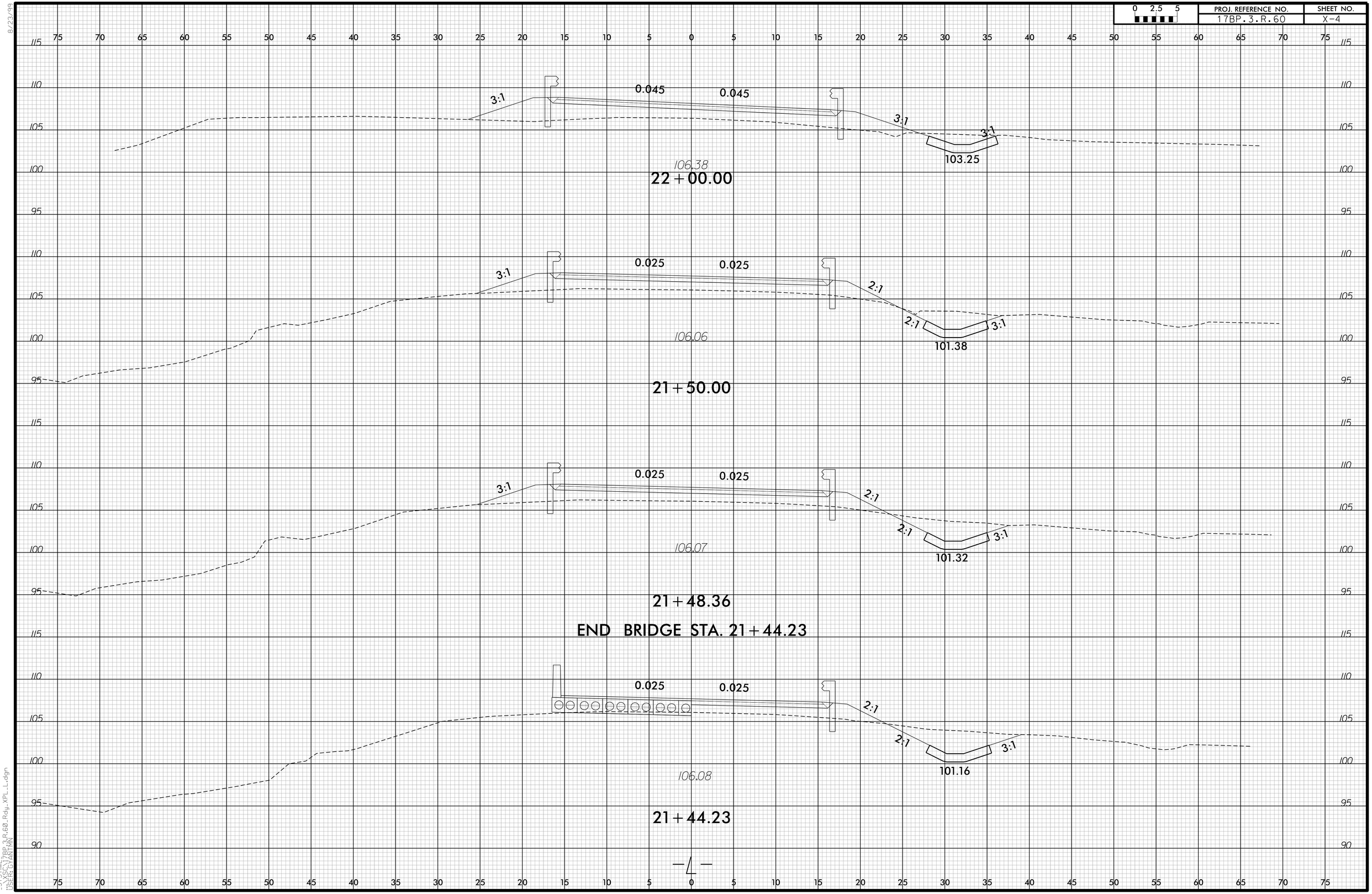

SYSTIME
_SYSTIME
USER: CYARKIN

0 2.5 5	PROJ. REFERENCE NO.	SHEET NO.
	17BP.3.R.60	X-5

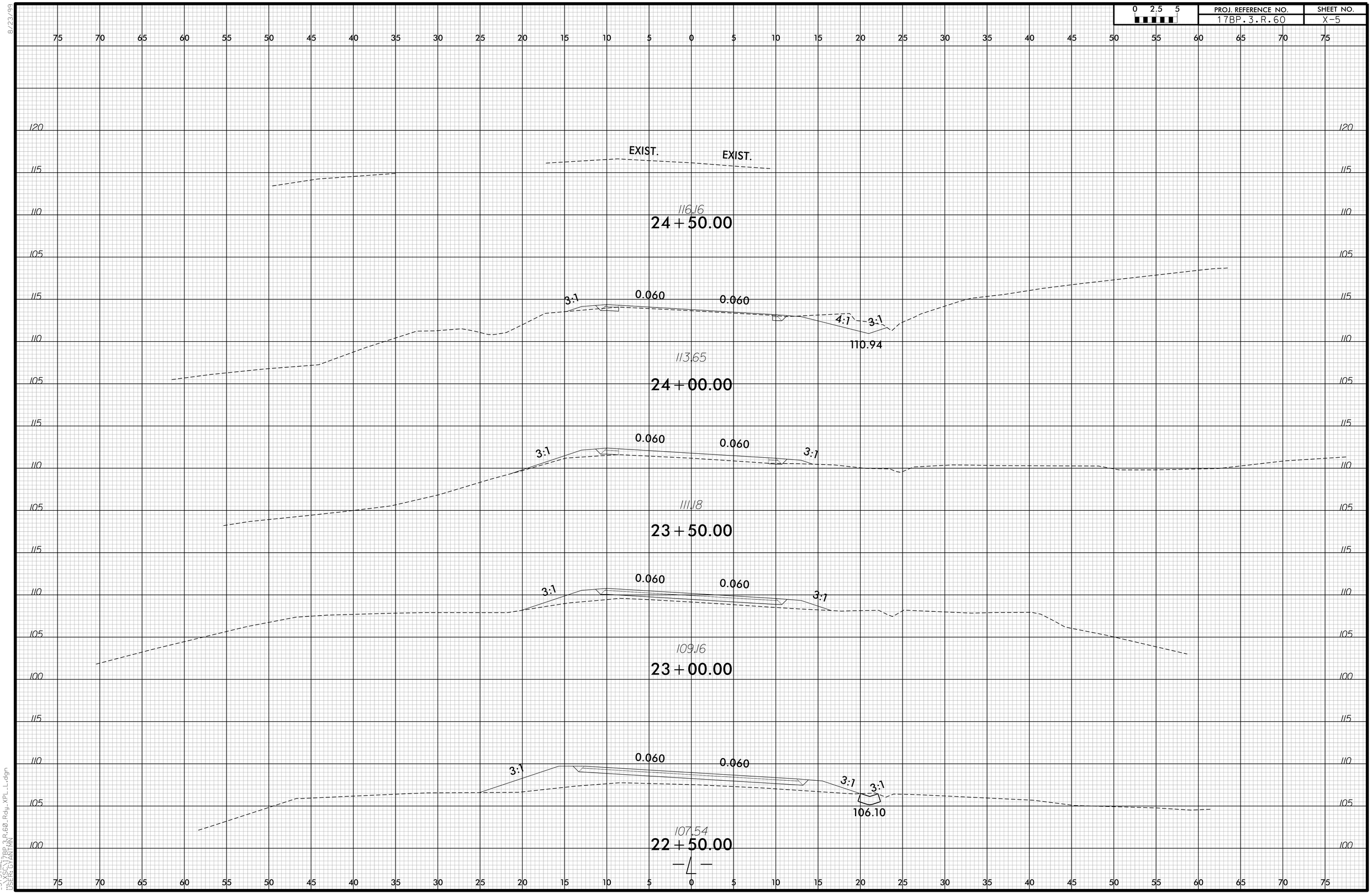

8/23/99

_SYSTIME
USER: CVANTMN

DocuSign Envelope ID: 1FC61DB2-6A53-44CD-B422-9481EA01A3ED

PROJECT: 17BP.3.R.60

CONTRACT: DC00211

STRUCTURE

STATE	STATE PROJECT REFERENCE NO.	SHEET NO.	TOTAL SHEETS
N.C.	17BP.3.R.60		19

STATE PROJ. NO.	F. A. PROJ. NO.	DESCRIPTION
17BP.3.R.60	N/A	P.E.
17BP.3.R.60	N/A	UTIL. & R/W
17BP.3.R.60	N/A	CONSTR.

STATE OF NORTH CAROLINA
DIVISION OF HIGHWAYS

DUPLIN COUNTY

LOCATION: REPLACE BRIDGE 219 OVER BEAR SWAMP ON SR 1354 (TAYLOR TOWN ROAD)

TYPE OF WORK: GRADING, DRAINAGE, PAVING, AND STRUCTURE

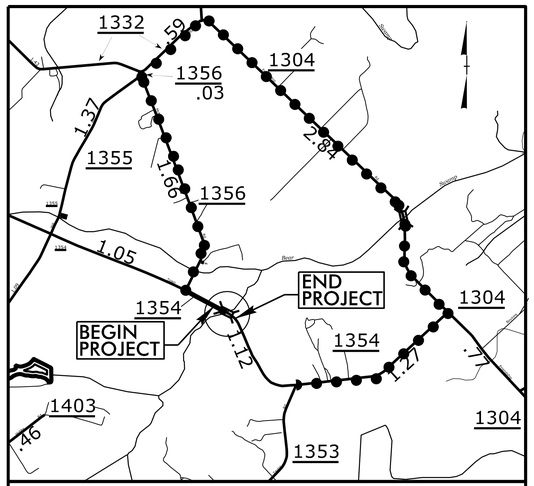

VICINITY MAP

OFF–SITE DETOUR ROUTE

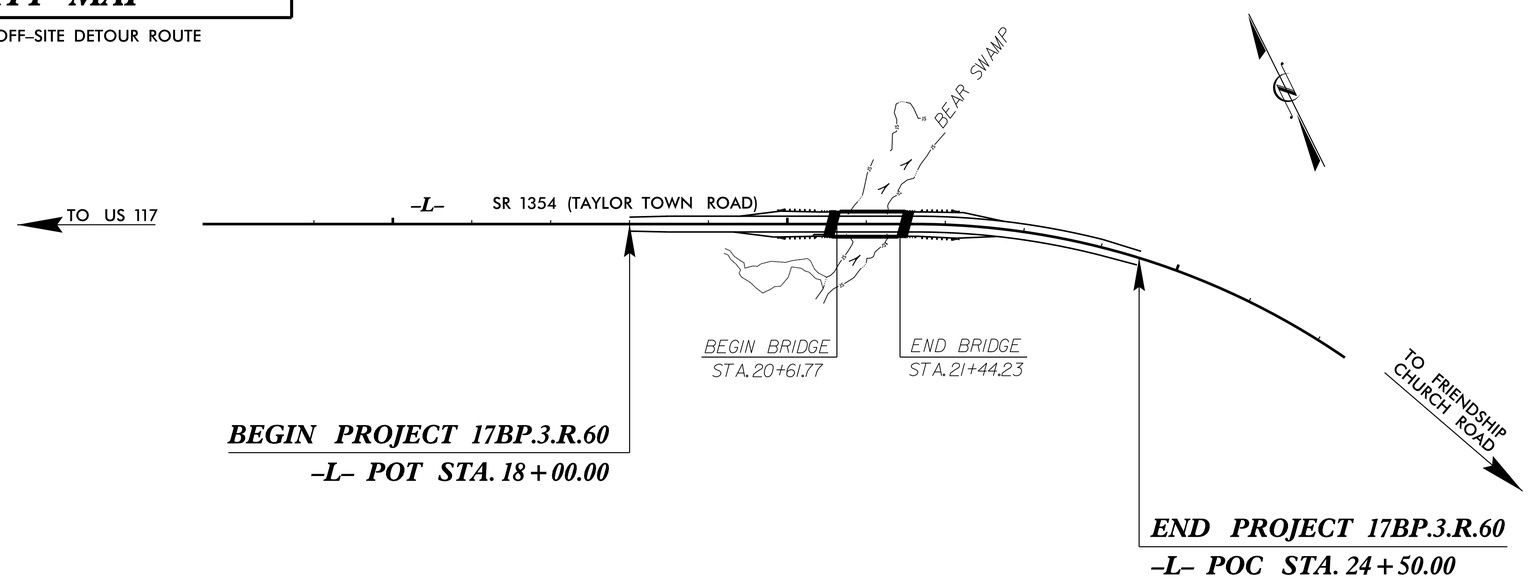

NORTH CAROLINA PROFESSIONAL SEAL 016301 ENGINEER TING H. FANG

DocuSign Envelope: 5/14/2018 3:30:49 AM PDT

STATE OF NORTH CAROLINA DEPARTMENT OF TRANSPORTATION

DESIGN DATA

ADT 2018 = 209 VPD
ADT 2038 = 377 VPD
DHV = N/A %
D = N/A %
T = N/A % *
V = 60 MPH

FUNC CLASS = LOCAL
SUB–REGIONAL TIER

PROJECT LENGTH

LENGTH ROADWAY PROJECT 17BP.3.R.60 = 0.107 MILES

LENGTH STRUCTURE PROJECT 17BP.3.R.60 = 0.016 MILES

TOTAL LENGTH OF PROJECT 17BP.3.R.60 = 0.123 MILES

Prepared In the Office of:

DIVISION OF HIGHWAYS
STRUCTURES MANAGEMENT UNIT
1000 BIRCH RIDGE DR.
RALEIGH, N.C. 27610

2018 STANDARD SPECIFICATIONS

LETTING DATE : JULY 19, 2018

DAVID Z. KEISER, P.E.
PROJECT ENGINEER

TING H. FANG, P.E.
PROJECT DESIGN ENGINEER

CDM Smith

CDM SMITH
5400 Glenwood Avenue, Suite 400
Raleigh, NC 27612–3228
NC COA No. F–1255

DocuSign Envelope ID: 749495CC-F237-4B85-8F86-D7A87F630488

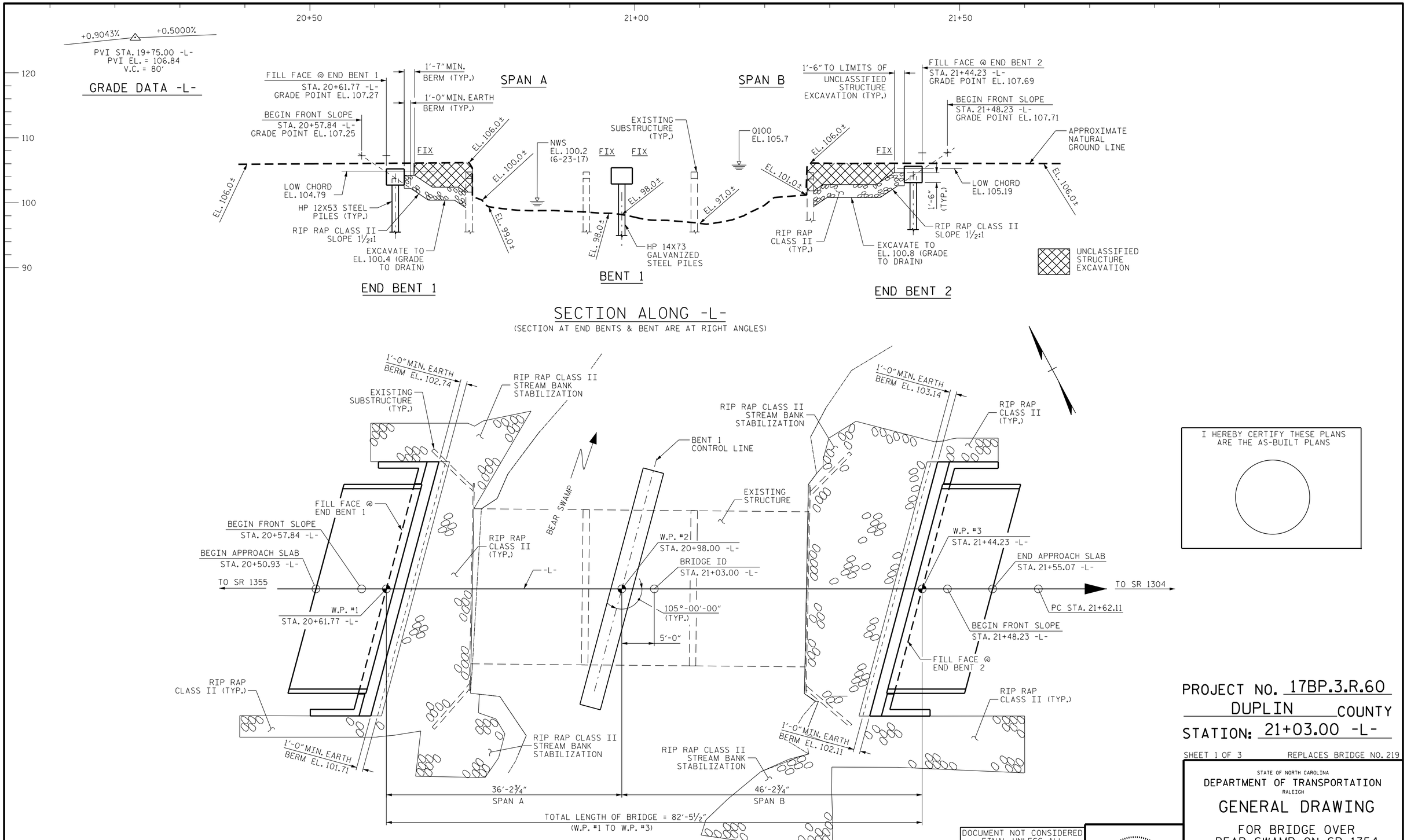

I HEREBY CERTIFY THESE PLANS ARE THE AS-BUILT PLANS

PROJECT NO. 17BP.3.R.60

DUPLIN COUNTY

STATION: 21+03.00 -L-

SHEET 1 OF 3 REPLACES BRIDGE NO. 219

STATE OF NORTH CAROLINA
DEPARTMENT OF TRANSPORTATION
RALEIGH

GENERAL DRAWING

FOR BRIDGE OVER
BEAR SWAMP ON SR 1354
BETWEEN SR 1353 & SR 1356

DOCUMENT NOT CONSIDERED FINAL UNLESS ALL SIGNATURES COMPLETED

CDM Smith
CDM SMITH
5400 Glenwood Avenue, Suite 400
Raleigh, NC 27612-3228
NC COA No. F-1255

DRAWN BY :	VDK	DATE :	03/18
CHECKED BY :	THF	DATE :	03/18
DESIGN ENGINEER :	VDK	DATE :	03/18

DWG. No.

NORTH CAROLINA PROFESSIONAL SEAL 016301 ENGINEER TING H. FANG
5/7/2018 10:48:34 AM

REVISIONS								SHEET NO.
NO.	BY:	DATE:	NO.	BY:	DATE:			S-01
1			3					TOTAL SHEETS
2			4					19

FILE: c:\pw_pf\fangth\d0926010\401_001_17BP3R60_SMU_GD01_001_300219.dgn
DATE: 4/13/2018 12:15:31 AM

DocuSign Envelope ID: 749495CC-F237-4B85-8F86-D7A87F630488

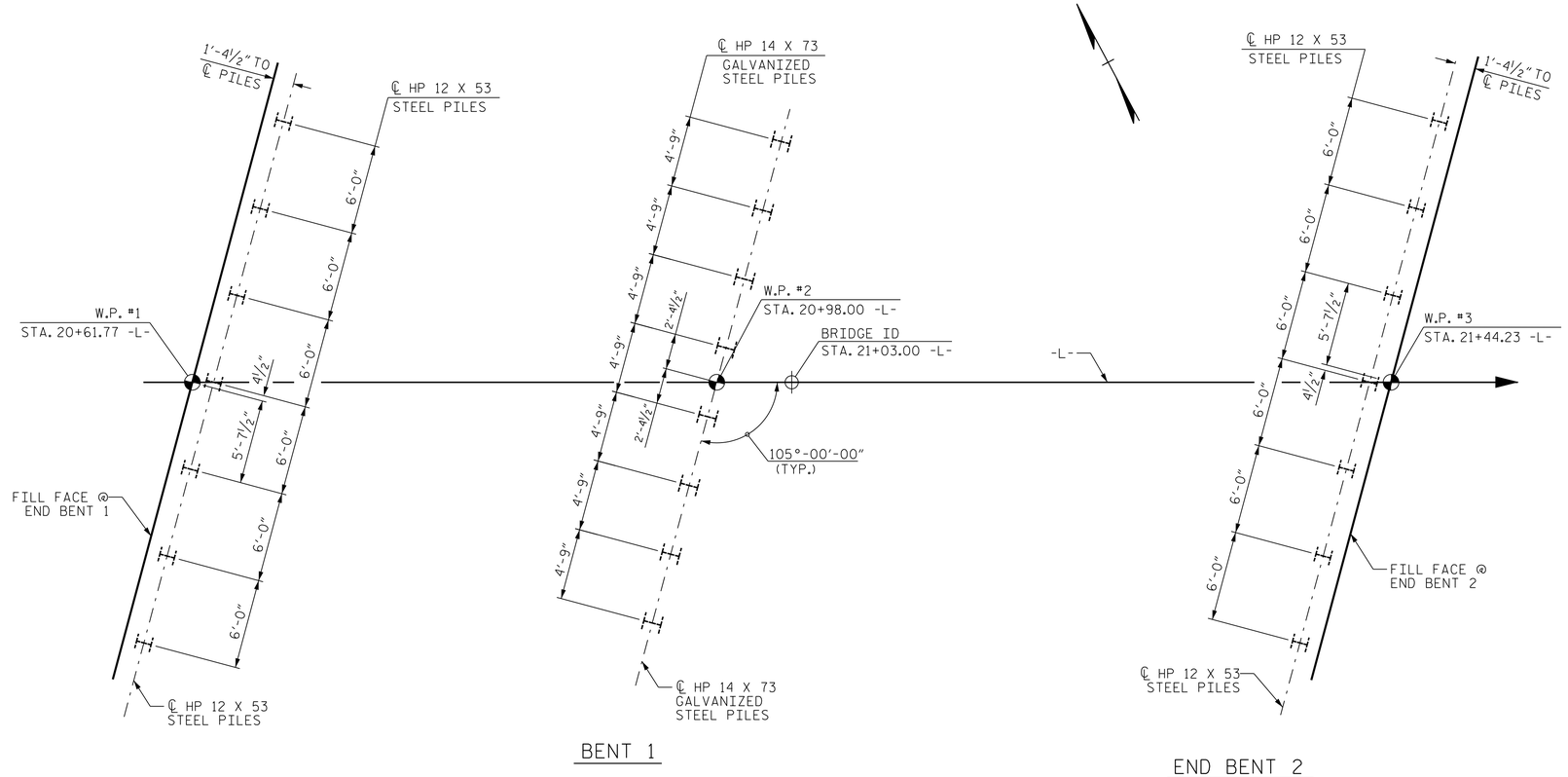

FOUNDATION LAYOUT

DIMENSIONS LOCATING PILES ARE SHOWN TO THE CENTERLINE OF PILES.

NOTES

FOR PILES, SEE SECTION 450 OF THE STANDARD SPECIFICATIONS.

PILES AT END BENT 1 ARE DESIGNED FOR A FACTORED RESISTANCE OF 55 TONS PER PILE.

PILES AT BENT 1 ARE DESIGNED FOR A FACTORED RESISTANCE OF 90 TONS PER PILE.

PILES AT END BENT 2 ARE DESIGNED FOR A FACTORED RESISTANCE OF 61 TONS PER PILE.

DRIVE PILES AT END BENT 1 TO A REQUIRED DRIVING RESISTANCE OF 95 TONS PER PILE.

DRIVE PILES AT BENT 1 TO A REQUIRED DRIVING RESISTANCE OF 160 TONS PER PILE. THIS REQUIRED DRIVING RESISTANCE INCLUDES ADDITIONAL RESISTANCE FOR SCOUR.

DRIVE PILES AT END BENT 2 TO A REQUIRED DRIVING RESISTANCE OF 105 TONS PER PILE.

INSTALL PILES AT BENT 1 TO A TIP ELEVATION NO HIGHER THAN 50 FT.

THE SCOUR CRITICAL ELEVATION FOR BENT 1 IS ELEVATION 86 FT. SCOUR CRITICAL ELEVATIONS ARE USED TO MONITOR POSSIBLE SCOUR PROBLEM DURING THE LIFE OF THE STRUCTURE.

TESTING PILES WITH THE PDA DURING DRIVING, RESTRIKING OR REDRIVING MAY BE REQUIRED. THE ENGINEER WILL DETERMINE THE NEED FOR PDA TESTING. FOR PDA TESTING, SEE SECTION 450 OF THE STANDARD SPECIFICATIONS.

PROJECT NO. 17BP.3.R.60
DUPLIN COUNTY
STATION: 21+03.00 -L-

SHEET 2 OF 3

STATE OF NORTH CAROLINA
DEPARTMENT OF TRANSPORTATION
RALEIGH

GENERAL DRAWING

FOR BRIDGE OVER
BEAR SWAMP ON SR1354
BETWEEN SR 1353 & 1356

DOCUMENT NOT CONSIDERED FINAL UNLESS ALL SIGNATURES COMPLETED

CDM Smith
CDM SMITH
5400 Glenwood Avenue, Suite 400
Raleigh, NC 27612-3228
NC COA No. F-1255

DRAWN BY :	VDK	DATE :	03/18
CHECKED BY :	THF	DATE :	03/18
DESIGN ENGINEER :	VDK	DATE :	03/18

DWG. No.

NORTH CAROLINA PROFESSIONAL SEAL 016301 ENGINEER TING H. FANG
5/7/2018 10:48:34 AM

REVISIONS						
NO.	BY:	DATE:	NO.	BY:	DATE:	
1			3			
2			4			

SHEET NO. S-02
TOTAL SHEETS 19

FILE: c:\pw_pll\angth\d0926010\401_003_17BP3R60_SMU_GD02_002_300219.dgn
DATE: 4/3/2018 12:15:38 AM

DocuSign Envelope ID: 749495CC-F237-4B85-8F86-D7A87F630488

TOTAL BILL OF MATERIAL

	REMOVAL OF EXISTING STRUCTURE	ASBESTOS ASSESSMENT	PDA TESTING	UNCLASSIFIED STRUCTURE EXCAVATION	CLASS A CONCRETE	BRIDGE APPROACH SLABS	REINFORCING STEEL	PILE DRIVING EQUIPMENT SETUP FOR HP 12X53 STEEL PILES	PILE DRIVING EQUIPMENT SETUP FOR HP 14X73 GALVANIZED STEEL PILES	HP 12 X 53 STEEL PILES		HP 14 X 73 GALVANIZED STEEL PILES		PILE REDRIVES	VERTICAL CONCRETE BARRIER RAIL	RIP RAP CLASS II (2'-0" THICK)	GEOTEXTILE FOR DRAINAGE	ELASTOMERIC BEARINGS	3'-0" X 1'-9" PRESTRESSED CONCRETE CORED SLABS	
	LUMP SUM	LUMP SUM	EA.	LUMP SUM	CU. YDS.	LUMP SUM	LBS.	EA.	EA.	NO.	LIN. FT.	NO.	LIN. FT.	EA.	LIN. FT.	TON	SQ. YD.	LUMP SUM	NO.	LIN. FT.
SUPERSTRUCTURE															160.26			LUMP SUM	22	880
END BENT 1				LUMP SUM	14.5		2,181	7		7	350.0			4		100	110			
BENT 1					11.3		2,226		8			8	560.0	4						
END BENT 2				LUMP SUM	14.5		2,181	7		7	385.0			4		140	155			
TOTAL	LUMP SUM	LUMP SUM	1	LUMP SUM	40.3	LUMP SUM	6,588	14	8	14	735.0	8	560.0	12	160.26	240	265	LUMP SUM	22	880

B.M. #1 RR SPIKE IN 18" GUM, 59.18' LEFT OF STA. 22+03.87 -L-, EL. 108.03.

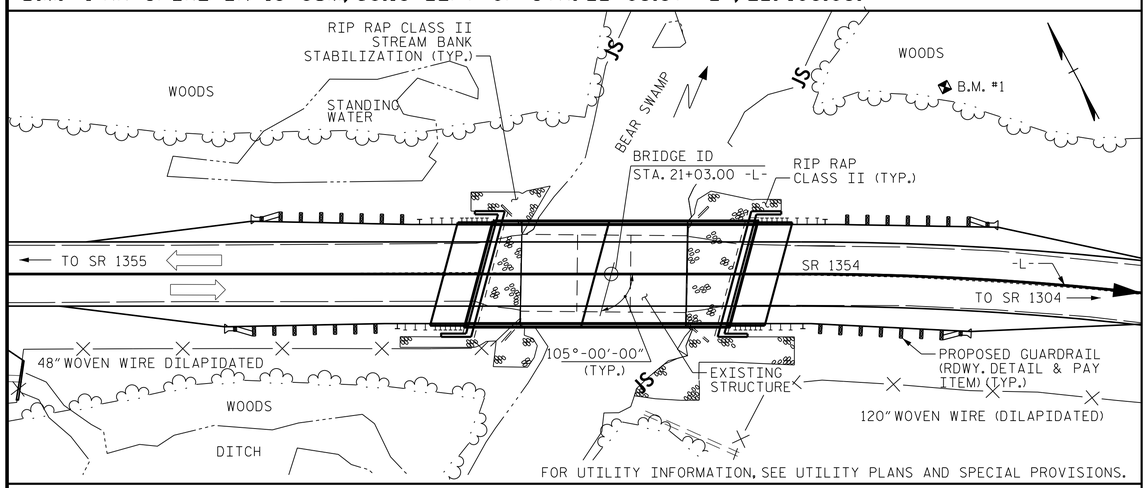

LOCATION SKETCH

NOTES:

ASSUMED LIVE LOAD = HL-93 OR ALTERNATE LOADING.

THIS BRIDGE HAS BEEN DESIGNED IN ACCORDANCE WITH THE AASHTO LRFD BRIDGE DESIGN SPECIFICATIONS

THIS BRIDGE IS LOCATED IN SEISMIC PERFORMANCE ZONE 1.

FOR OTHER DESIGN DATA AND GENERAL NOTES, SEE SHEET SN.

FOR EROSION CONTROL MEASURES SEE EROSION CONTROL PLANS.

THIS STRUCTURE HAS BEEN DESIGNED IN ACCORDANCE WITH "HEC-18 EVALUATING SCOUR AT BRIDGES".

REMOVAL OF THE EXISTING BRIDGE SHALL BE PERFORMED SO AS NOT TO ALLOW DEBRIS TO FALL INTO THE WATER. THE CONTRACTOR SHALL REMOVE THE BRIDGE AND SUBMIT PLANS FOR DEMOLITION IN ACCORDANCE WITH ARTICLE 402-2 OF THE STANDARD SPECIFICATIONS.

THE SUBSTRUCTURE OF THE EXISTING BRIDGE INDICATED ON THE PLANS IS FROM THE BEST INFORMATION AVAILABLE. SINCE THIS INFORMATION IS SHOWN FOR THE CONVENIENCE OF THE CONTRACTOR, THE CONTRACTOR SHALL HAVE NO CLAIM WHATSOEVER AGAINST THE DEPARTMENT OF TRANSPORTATION FOR ANY DELAYS OR ADDITIONAL COST INCURRED BASED ON DIFFERENCES BETWEEN THE EXISTING BRIDGE SUBSTRUCTURE SHOWN ON THE PLANS AND THE ACTUAL CONDITIONS AT THE PROJECT SITE.

FOR BENT 1, ONLY PARTIAL GALVANIZING OF THE PILES IS REQUIRED. SEE BENT 1 SHEET FOR REQUIRED GALVANIZED LENGTHS. PAYMENT FOR PARTIALLY GALVANIZED PILES WILL BE MADE UNDER THE CONTRACT UNIT PRICE FOR GALVANIZED STEEL PILES.

THE MATERIAL SHOWN IN THE CROSS-HATCHED AREA SHALL BE EXCAVATED FOR A DISTANCE OF 40 FT. BOTH SIDES, AT END BENTS 1 AND 48 FT. LEFT SIDE, 15 FT. RIGHT SIDE AT END BENT 2 OF CENTERLINE ROADWAY AS DIRECTED BY THE ENGINEER. THIS WORK WILL BE PAID FOR AT THE CONTRACT LUMP SUM PRICE FOR UNCLASSIFIED STRUCTURE EXCAVATION. SEE SECTION 412 OF THE STANDARD SPECIFICATIONS.

THE EXISTING STRUCTURE CONSISTING OF 3 SPANS: 1 @ 17'-6" 1 @ 16'-8" AND 1 @ 17'-10" WITH CLEAR ROADWAY WIDTH OF 24'-0" AND RC FLOOR ON TIMBER JOIST, STD. BMD-10; SUBSTRUCTURE CONSISTING OF TIMBER CAPS ON CONCRETE ENCASED TIMBER PILES AT END BENTS AND INTERIOR BENT AND LOCATED AT THE SITE OF THE PROPOSED BRIDGE SHALL BE REMOVED. THE EXISTING BRIDGE IS PRESENTLY POSTED FOR LOAD LIMIT.

FOR FALSEWORK AND FORMWORK, SEE SPECIAL PROVISIONS.

FOR SUBMITTAL OF WORKING DRAWINGS, SEE SPECIAL PROVISIONS.

FOR CRANE SAFETY, SEE SPECIAL PROVISIONS.

FOR GROUT FOR STRUCTURES, SEE SPECIAL PROVISIONS.

FOR ASBESTOS ASSESSMENT FOR BRIDGE DEMOLITION AND RENOVATION ACTIVITIES, SEE SPECIAL PROVISIONS.

ASPHALT WEARING SURFACE IS INCLUDED IN ROADWAY QUANTITY ON ROADWAY PLANS.

HYDRAULIC DATA

DESIGN DISCHARGE	= 1200 CFS
FREQUENCY OF DESIGN FLOOD	= 25 YR.
DESIGN HIGH WATER ELEVATION	= 104.2 FT.
DRAINAGE AREA	= 13.8 SQ. MI.
BASE DISCHARGE (Q100)	= 1800 CFS
BASE HIGH WATER ELEVATION	= 105.7 FT.

OVERTOPPING FLOOD DATA

OVERTOPPING DISCHARGE	= 1800 CFS
FREQUENCY OF OVERTOPPING FLOOD	= 100 YRS.
OVERTOPPING FLOOD ELEVATION	= 105.7 FT.*

*ELEVATION IS TAKEN AT STA. 17+55.0 -L-

PROJECT NO. 17BP.3.R.60
DUPLIN COUNTY
STATION: 21+03.00 -L-

SHEET 3 OF 3

STATE OF NORTH CAROLINA
DEPARTMENT OF TRANSPORTATION
RALEIGH

GENERAL DRAWING

FOR BRIDGE OVER
BEAR SWAMP ON SR 1354
BETWEEN SR 1353 & SR 1356

DOCUMENT NOT CONSIDERED FINAL UNLESS ALL SIGNATURES COMPLETED

CDM Smith
CDM SMITH
5400 Glenwood Avenue, Suite 400
Raleigh, NC 27612-3228
NC COA No. F-1255

DRAWN BY : VDK DATE : 03/18
CHECKED BY : THF DATE : 03/18
DESIGN ENGINEER : VDK DATE : 03/18

DWG. No.

NORTH CAROLINA PROFESSIONAL SEAL 016301 ENGINEER TING H. FANG
5/7/2018 10:48:34 AM

REVISIONS						
NO.	BY:	DATE:	NO.	BY:	DATE:	
1			3			
2			4			

SHEET NO. S-03
TOTAL SHEETS 19

FILE: c:\pw_pll\angth\d0926010\401_003_17BP3R60_SMU_GD03_003_300219.dgn
DATE: 4/3/2018 9:08:36 AM

DocuSign Envelope ID: 749495CC-F237-4B85-8F86-D7A87F630488

LOAD AND RESISTANCE FACTOR RATING (LRFD) SUMMARY FOR PRESTRESSED CORED SLAB UNIT

LEVEL		VEHICLE	WEIGHT (W) (TONS)	CONTROLLING LOAD RATING	MINIMUM RATING FACTORS (RF)	TONS = W X RF	STRENGTH I LIMIT STATE											SERVICE III LIMIT STATE						COMMENT NUMBER
								MOMENT					SHEAR						MOMENT					
							LIVELOAD FACTORS	DISTRIBUTION FACTORS (DF)	RATING FACTOR	SPAN	GIRDER LOCATION	DISTANCE FROM LEFT END OF SPAN (ft)	DISTRIBUTION FACTORS (DF)	RATING FACTOR	SPAN	GIRDER LOCATION	DISTANCE FROM LEFT END OF SPAN (ft)	LIVELOAD FACTORS	DISTRIBUTION FACTORS (DF)	RATING FACTOR	SPAN	GIRDER LOCATION	DISTANCE FROM LEFT END OF SPAN (ft)	
DESIGN LOAD RATING		HL-93(Inv)	N/A	1	1.060	--	1.75	0.275	1.38	35′	EL	16.982	0.623	1.20	35′	EL	1.698	0.80	0.275	**1.06**	35′	EL	**16.982**	
		HL-93(Opr)	N/A	--	1.549	--	1.35	0.275	1.79	35′	EL	16.982	0.623	1.55	35′	EL	1.698	N/A	--	--	--	--	--	
		HS-20(Inv)	36.000	2	1.377	49.573	1.75	0.275	1.82	35′	EL	13.586	0.623	**1.38**	35′	EL	**1.698**	0.80	0.275	1.41	35′	EL	16.982	
		HS-20(Opr)	36.000	--	1.785	64.262	1.35	0.275	2.36	35′	EL	13.586	0.623	1.79	35′	EL	1.698	N/A	--	--	--	--	--	
LEGAL LOAD RATING	SV	SNSH	13.500	--	2.424	32.72	1.4	0.275	3.95	35′	EL	16.982	0.623	3.55	35′	EL	1.698	0.80	0.275	2.42	35′	EL	16.982	
		SNGARBS2	20.000	--	2.082	41.635	1.4	0.275	3.34	35′	EL	13.586	0.623	2.68	35′	EL	1.698	0.80	0.275	2.08	35′	EL	13.586	
		SNAGRIS2	22.000	--	2.076	45.668	1.4	0.275	3.31	35′	EL	13.586	0.623	2.56	35′	EL	1.698	0.80	0.275	2.08	35′	EL	13.586	
		SNCOTTS3	27.250	--	1.213	33.066	1.4	0.275	1.98	35′	EL	16.982	0.623	1.79	35′	EL	1.698	0.80	0.275	1.21	35′	EL	16.982	
		SNAGGRS4	34.925	--	1.123	39.207	1.4	0.275	1.83	35′	EL	16.982	0.623	1.60	35′	EL	1.698	0.80	0.275	1.12	35′	EL	16.982	
		SNS5A	35.550	--	1.090	38.739	1.4	0.275	1.77	35′	EL	16.982	0.623	1.69	35′	EL	1.698	0.80	0.275	1.09	35′	EL	16.982	
		SNS6A	39.950	--	1.052	42.014	1.4	0.275	1.71	35′	EL	16.982	0.623	1.58	35′	EL	1.698	0.80	0.275	1.05	35′	EL	16.982	
		SNS7B	42.000	3	1.004	42.153	1.4	0.275	1.63	35′	EL	16.982	0.623	1.62	35′	EL	1.698	0.80	0.275	**1.00**	35′	EL	**16.982**	
	TTST	TNAGRIT3	33.000	--	1.299	42.872	1.4	0.275	2.11	35′	EL	16.982	0.623	1.85	35′	EL	1.698	0.80	0.275	1.30	35′	EL	16.982	
		TNT4A	33.075	--	1.298	42.933	1.4	0.275	2.11	35′	EL	16.982	0.623	1.75	35′	EL	1.698	0.80	0.275	1.30	35′	EL	16.982	
		TNT6A	41.600	--	1.137	47.314	1.4	0.275	1.85	35′	EL	16.982	0.623	1.71	35′	EL	1.698	0.80	0.275	1.14	35′	EL	16.982	
		TNT7A	42.000	--	1.175	49.358	1.4	0.275	1.92	35′	EL	16.982	0.623	1.59	35′	EL	1.698	0.80	0.275	1.18	35′	EL	16.982	
		TNT7B	42.000	--	1.156	48.536	1.4	0.275	1.88	35′	EL	16.982	0.623	1.54	35′	EL	1.698	0.80	0.275	1.16	35′	EL	16.982	
		TNAGRIT4	43.000	--	1.170	50.308	1.4	0.275	1.89	35′	EL	13.586	0.623	1.48	35′	EL	1.698	0.80	0.275	1.17	35′	EL	16.982	
		TNAGT5A	45.000	--	1.079	48.572	1.4	0.275	1.76	35′	EL	16.982	0.623	1.56	35′	EL	1.698	0.80	0.275	1.08	35′	EL	16.982	
		TNAGT5B	45.000	--	1.041	46.853	1.4	0.275	1.69	35′	EL	16.982	0.623	1.40	35′	EL	1.698	0.80	0.275	1.04	35′	EL	16.982	

LOAD FACTORS:

DESIGN LOAD RATING FACTORS	LIMIT STATE	γ_{DC}	γ_{DW}
	STRENGTH I	1.25	1.50
	SERVICE III	1.00	1.00

NOTES:

MINIMUM RATING FACTORS ARE BASED ON THE STRENGTH I AND SERVICE III LIMIT STATES.

ALLOWABLE STRESSES FOR SERVICE III LIMIT STATE ARE AS REQUIRED FOR DESIGN.

COMMENTS:

1.
2.
3.
4.

CONTROLLING LOAD RATING
1 DESIGN LOAD RATING (HL-93)
2 DESIGN LOAD RATING (HS-20)
3 LEGAL LOAD RATING **
** SEE CHART FOR VEHICLE TYPE

GIRDER LOCATION
I - INTERIOR GIRDER
EL - EXTERIOR LEFT GIRDER
ER - EXTERIOR RIGHT GIRDER

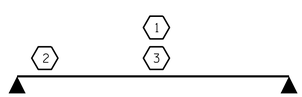

LRFR SUMMARY
FOR SPAN 'A'

PROJECT NO. 17BP.3.R.60
DUPLIN COUNTY
STATION: 21+03.00 -L-

SHEET 1 OF 2

STATE OF NORTH CAROLINA
DEPARTMENT OF TRANSPORTATION
RALEIGH

LRFR SUMMARY FOR
35′ CORED SLAB UNIT
105° SKEW
SPAN A
(NON-INTERSTATE TRAFFIC)

DOCUMENT NOT CONSIDERED FINAL UNLESS ALL SIGNATURES COMPLETED

CDM Smith
CDM SMITH
5400 Glenwood Avenue, Suite 400
Raleigh, NC 27612-3228
NC COA No. F-1255

DRAWN BY : VDK DATE : 03/18
CHECKED BY : THF DATE : 03/18
DESIGN ENGINEER : VDK DATE : 03/18

DWG. No.

NORTH CAROLINA PROFESSIONAL SEAL 016301 ENGINEER TING H. FANG
5/7/2018 10:48:34 AM

REVISIONS						SHEET NO.
NO.	BY:	DATE:	NO.	BY:	DATE:	S-04
1			3			TOTAL SHEETS
2			4			19

STD. NO. 21LRFR1_75&105S_35L

FILE: c:\pw_pdf\fangth\d0923010\401_007_17BP3R60_SMU_LRFR_004_300219.dgn
DATE: 4/3/2018 12:15:53 AM

DocuSign Envelope ID: 749495CC-F237-4B85-8F86-D7A87F630488

LOAD AND RESISTANCE FACTOR RATING (LRFD) SUMMARY FOR PRESTRESSED CORED SLAB UNIT

LEVEL		VEHICLE	WEIGHT (W) (TONS)	CONTROLLING LOAD RATING	MINIMUM RATING FACTORS (RF)	TONS = W X RF	STRENGTH I LIMIT STATE											SERVICE III LIMIT STATE						COMMENT NUMBER
								MOMENT					SHEAR						MOMENT					
							LIVELOAD FACTORS	DISTRIBUTION FACTORS (DF)	RATING FACTOR	SPAN	GIRDER LOCATION	DISTANCE FROM LEFT END OF SPAN (ft)	DISTRIBUTION FACTORS (DF)	RATING FACTOR	SPAN	GIRDER LOCATION	DISTANCE FROM LEFT END OF SPAN (ft)	LIVELOAD FACTORS	DISTRIBUTION FACTORS (DF)	RATING FACTOR	SPAN	GIRDER LOCATION	DISTANCE FROM LEFT END OF SPAN (ft)	
DESIGN LOAD RATING		HL-93(Inv)	N/A	1	1.098	--	1.75	0.272	1.36	45'	EL	21.982	0.617	1.46	45'	EL	35.172	0.80	0.272	**1.10**	45'	EL	**21.982**	
		HL-93(Opr)	N/A	--	1.764	--	1.35	0.272	1.76	45'	EL	21.982	0.617	1.89	45'	EL	35.172	N/A	--	--	--	--	--	
		HS-20(Inv)	36.000	2	1.347	48.507	1.75	0.272	1.67	45'	EL	21.982	0.617	1.68	45'	EL	8.793	0.80	0.272	**1.35**	45'	EL	**21.982**	
		HS-20(Opr)	36.000	--	2.165	77.938	1.35	0.272	2.16	45'	EL	21.982	0.617	2.17	45'	EL	8.793	N/A	--	--	--	--	--	
LEGAL LOAD RATING	SV	SNSH	13.500	--	2.632	35.536	1.4	0.272	4.08	45'	EL	21.982	0.617	4.43	45'	EL	35.172	0.80	0.272	2.63	45'	EL	21.982	
		SNGARBS2	20.000	--	2.126	42.513	1.4	0.272	3.29	45'	EL	21.982	0.617	3.32	45'	EL	35.172	0.80	0.272	2.13	45'	EL	21.982	
		SNAGRIS2	22.000	--	2.085	45.877	1.4	0.272	3.19	45'	EL	17.586	0.617	3.15	45'	EL	35.172	0.80	0.272	2.09	45'	EL	21.982	
		SNCOTTS3	27.250	--	1.314	35.814	1.4	0.272	2.04	45'	EL	21.982	0.617	2.23	45'	EL	8.793	0.80	0.272	1.31	45'	EL	21.982	
		SNAGGRS4	34.925	--	1.160	40.510	1.4	0.272	1.80	45'	EL	21.982	0.617	1.97	45'	EL	35.172	0.80	0.272	1.16	45'	EL	21.982	
		SNS5A	35.550	--	1.130	40.167	1.4	0.272	1.75	45'	EL	21.982	0.617	2.06	45'	EL	8.793	0.80	0.272	1.13	45'	EL	21.982	
		SNS6A	39.950	--	1.064	42.522	1.4	0.272	1.65	45'	EL	21.982	0.617	1.94	45'	EL	35.172	0.80	0.272	1.06	45'	EL	21.982	
		SNS7B	42.000	3	1.015	42.617	1.4	0.272	1.57	45'	EL	21.982	0.617	1.98	45'	EL	35.172	0.80	0.272	**1.01**	45'	EL	**21.982**	
	TTST	TNAGRIT3	33.000	--	1.306	43.112	1.4	0.272	2.02	45'	EL	21.982	0.617	2.26	45'	EL	8.793	0.80	0.272	1.31	45'	EL	21.982	
		TNT4A	33.075	--	1.320	43.663	1.4	0.272	2.05	45'	EL	21.982	0.617	2.14	45'	EL	35.172	0.80	0.272	1.32	45'	EL	21.982	
		TNT6A	41.600	--	1.108	46.093	1.4	0.272	1.72	45'	EL	21.982	0.617	2.11	45'	EL	35.172	0.80	0.272	1.11	45'	EL	21.982	
		TNT7A	42.000	--	1.129	47.436	1.4	0.272	1.75	45'	EL	21.982	0.617	1.96	45'	EL	35.172	0.80	0.272	1.13	45'	EL	21.982	
		TNT7B	42.000	--	1.176	49.384	1.4	0.272	1.82	45'	EL	21.982	0.617	1.88	45'	EL	35.172	0.80	0.272	1.18	45'	EL	21.982	
		TNAGRIT4	43.000	--	1.120	48.157	1.4	0.272	1.74	45'	EL	21.982	0.617	1.80	45'	EL	35.172	0.80	0.272	1.12	45'	EL	21.982	
		TNAGT5A	45.000	--	1.042	46.893	1.4	0.272	1.61	45'	EL	21.982	0.617	1.88	45'	EL	35.172	0.80	0.272	1.04	45'	EL	21.982	
		TNAGT5B	45.000	--	1.017	45.785	1.4	0.272	1.58	45'	EL	21.982	0.617	1.70	45'	EL	35.172	0.80	0.272	1.02	45'	EL	21.982	

LOAD FACTORS:

DESIGN LOAD RATING FACTORS	LIMIT STATE	γ_{DC}	γ_{DW}
	STRENGTH I	1.25	1.50
	SERVICE III	1.00	1.00

NOTES:

MINIMUM RATING FACTORS ARE BASED ON THE STRENGTH I AND SERVICE III LIMIT STATES.

ALLOWABLE STRESSES FOR SERVICE III LIMIT STATE ARE AS REQUIRED FOR DESIGN.

COMMENTS:

1.
2.
3.
4.

CONTROLLING LOAD RATING

1 DESIGN LOAD RATING (HL-93)
2 DESIGN LOAD RATING (HS-20)
3 LEGAL LOAD RATING **
** SEE CHART FOR VEHICLE TYPE

GIRDER LOCATION

I - INTERIOR GIRDER
EL - EXTERIOR LEFT GIRDER
ER - EXTERIOR RIGHT GIRDER

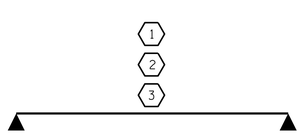

LRFR SUMMARY
FOR SPAN 'B'

PROJECT NO. 17BP.3.R.60
DUPLIN COUNTY
STATION: 21+03.00 -L-

SHEET 2 OF 2

STATE OF NORTH CAROLINA
DEPARTMENT OF TRANSPORTATION
RALEIGH

LRFR SUMMARY FOR
45' CORED SLAB UNIT
105° SKEW
SPAN B
(NON-INTERSTATE TRAFFIC)

DOCUMENT NOT CONSIDERED FINAL UNLESS ALL SIGNATURES COMPLETED

CDM Smith
CDM SMITH
5400 Glenwood Avenue, Suite 400
Raleigh, NC 27612-3228
NC COA No. F-1255

DRAWN BY : VDK DATE : 03/18
CHECKED BY : THF DATE : 03/18
DESIGN ENGINEER : VDK DATE : 03/18

DWG. No.

NORTH CAROLINA PROFESSIONAL SEAL 016301 ENGINEER JING H. FANG
5/7/2018 10:48:34 AM

REVISIONS						SHEET NO.
NO.	BY:	DATE:	NO.	BY:	DATE:	S-05
1			3			TOTAL SHEETS
2			4			19

STD. NO. 21LRFR1_75&105S_45L

FILE: c:\pw_pll\fangth\d0926010\401_009_17BP.3.R.60_SMU_LRFR_005_300219.dgn
DATE: 4/13/2018 12:16:00 AM

DocuSign Envelope ID: 749495CC-F237-4B85-8F86-D7A87F630488

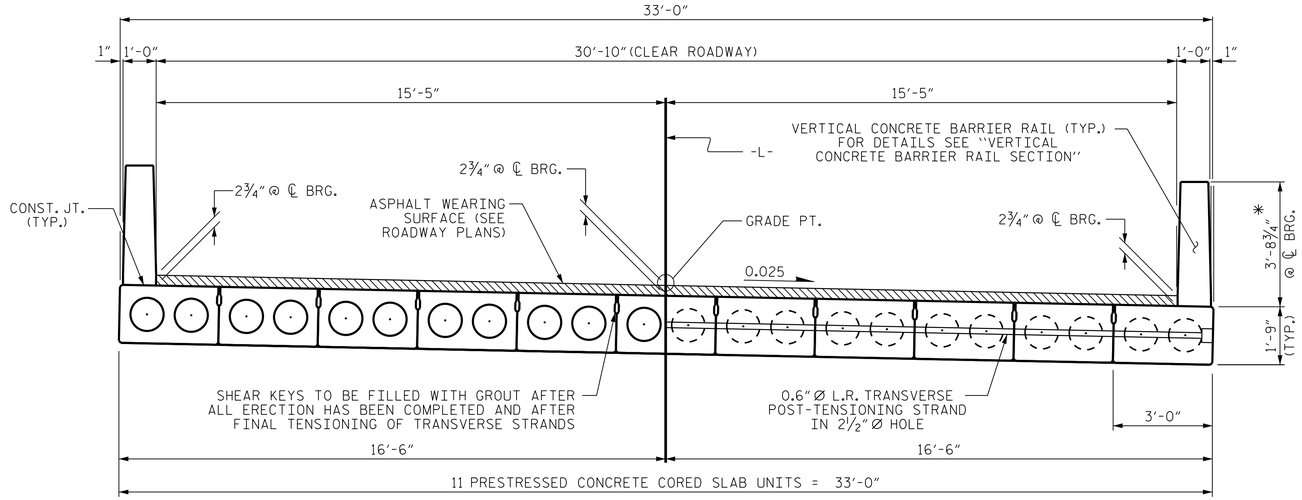

HALF SECTION
AT INTERMEDIATE DIAPHRAGMS

HALF SECTION
THROUGH VOIDS

TYPICAL SECTION

* - THE MAXIMUM BARRIER RAIL HEIGHT AND ASPHALT THICKNESS IS SHOWN. THE HEIGHT OF THE BARRIER RAIL AND ASPHALT THICKNESS VARIES WHILE THE TOP OF THE BARRIER RAIL FOLLOWS THE PROFILE OF THE GUTTERLINE. FOR RAIL HEIGHT DETAILS AND ASPHALT THICKNESS SEE THE "VERTICAL CONCRETE BARRIER RAIL SECTION" DETAIL.

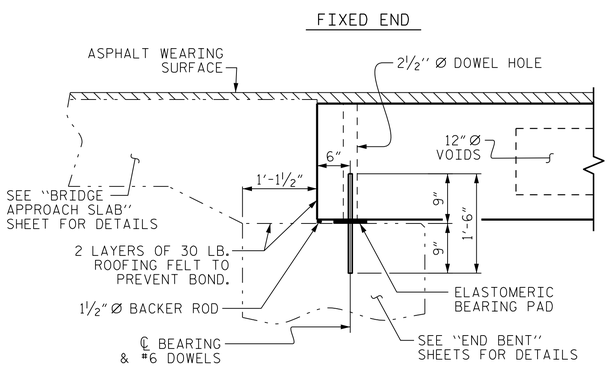

SECTION AT END BENT

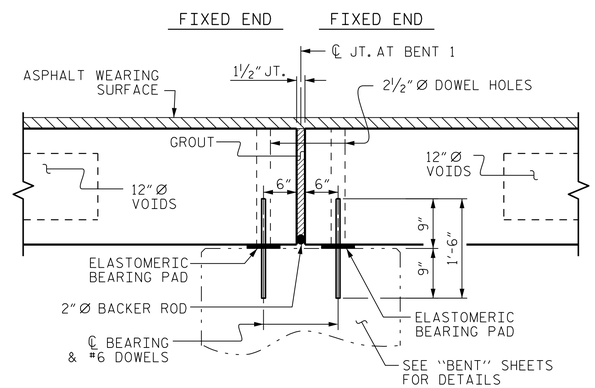

SECTION AT BENT 1

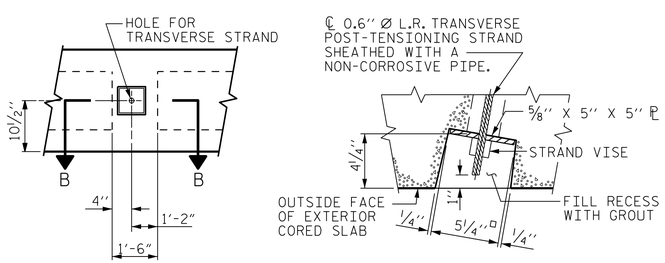

GROUTED RECESS AT END OF POST-TENSIONED STRAND OF CORED SLABS

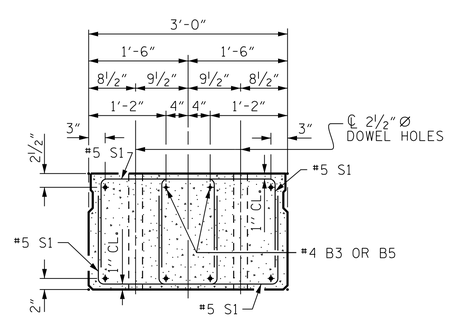

END ELEVATION

SHOWING PLACEMENT OF DOUBLE STIRRUPS AND LOCATION OF DOWEL HOLES. (STRAND LAYOUT NOT SHOWN.) INTERIOR SLAB UNIT SHOWN-EXTERIOR SLAB UNIT SIMILAR EXCEPT SHEAR KEY LOCATION.

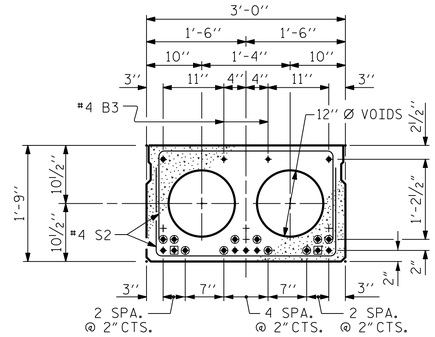

INTERIOR SLAB SECTION SPAN A (35' UNIT)

(9 STRANDS REQUIRED)

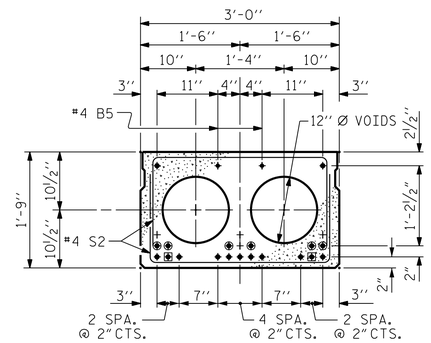

INTERIOR SLAB SECTION SPAN B (45' UNIT)

(13 STRANDS REQUIRED)

0.6" Ø LOW RELAXATION STRAND LAYOUT

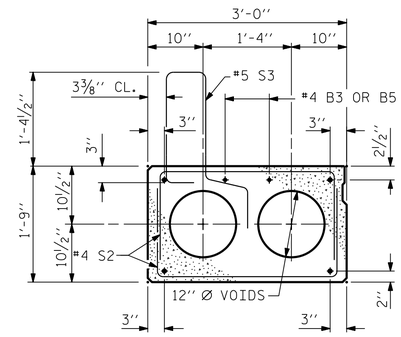

EXT. SLAB SECTION

(FOR PRESTRESSED STRAND LAYOUT, SEE INTERIOR SLAB SECTION.)

◉ BOND SHALL BE BROKEN ON THESE STRANDS FOR A DISTANCE OF 2'-0" FROM END OF CORED SLAB UNIT. SEE STANDARD SPECIFICATIONS, ARTICLE 1078-7.

◉ OPTIONAL FULL LENGTH DEBONDED STRANDS. THESE STRANDS ARE NOT REQUIRED. IF THE FABRICATOR CHOOSES TO INCLUDE THESE STRANDS IN THE CORED SLAB UNIT, THE STRANDS SHALL BE DEBONDED FOR THE FULL LENGTH OF THE UNIT AT NO ADDITIONAL COST. SEE STANDARD SPECIFICATIONS, ARTICLE 1078-7.

DEBONDING LEGEND

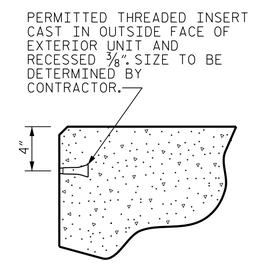

THREADED INSERT DETAIL

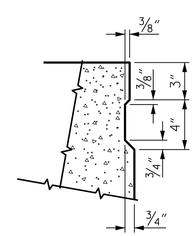

SHEAR KEY DETAIL

NOTE: OMIT SHEAR KEY ON OUTSIDE FACE OF EXTERIOR CORED SLABS.

PROJECT NO. 17BP.3.R.60
DUPLIN COUNTY
STATION: 21+03.00 -L-

SHEET 1 OF 5

STATE OF NORTH CAROLINA
DEPARTMENT OF TRANSPORTATION
RALEIGH

3'-0" X 1'-9" PRESTRESSED CONCRETE CORED SLAB UNIT 105° SKEW SPANS A & B

DOCUMENT NOT CONSIDERED FINAL UNLESS ALL SIGNATURES COMPLETED

CDM Smith
CDM SMITH
5400 Glenwood Avenue, Suite 400
Raleigh, NC 27612-3228
NC COA No. F-1255

DRAWN BY :	VDK	DATE :	03/18
CHECKED BY :	THF	DATE :	03/18
DESIGN ENGINEER :	VDK	DATE :	03/18

DWG. No.

NORTH CAROLINA PROFESSIONAL SEAL 016301 ENGINEER JING H. FANG
5/7/2018 10:48:34 AM

REVISIONS						SHEET NO.
NO.	BY:	DATE:	NO.	BY:	DATE:	S-06
1			3			TOTAL SHEETS
2			4			19

STD. NO. 21" PCS2_33_105S

FILE: c:\pw_pll\fangth\d0920010\401_01_17BP3R60_SMU_CS1_006_300219.dgn
DATE: 4/13/2018 12:16:08 AM

DocuSign Envelope ID: 749495CC-F237-4B85-8F86-D7A87F630488

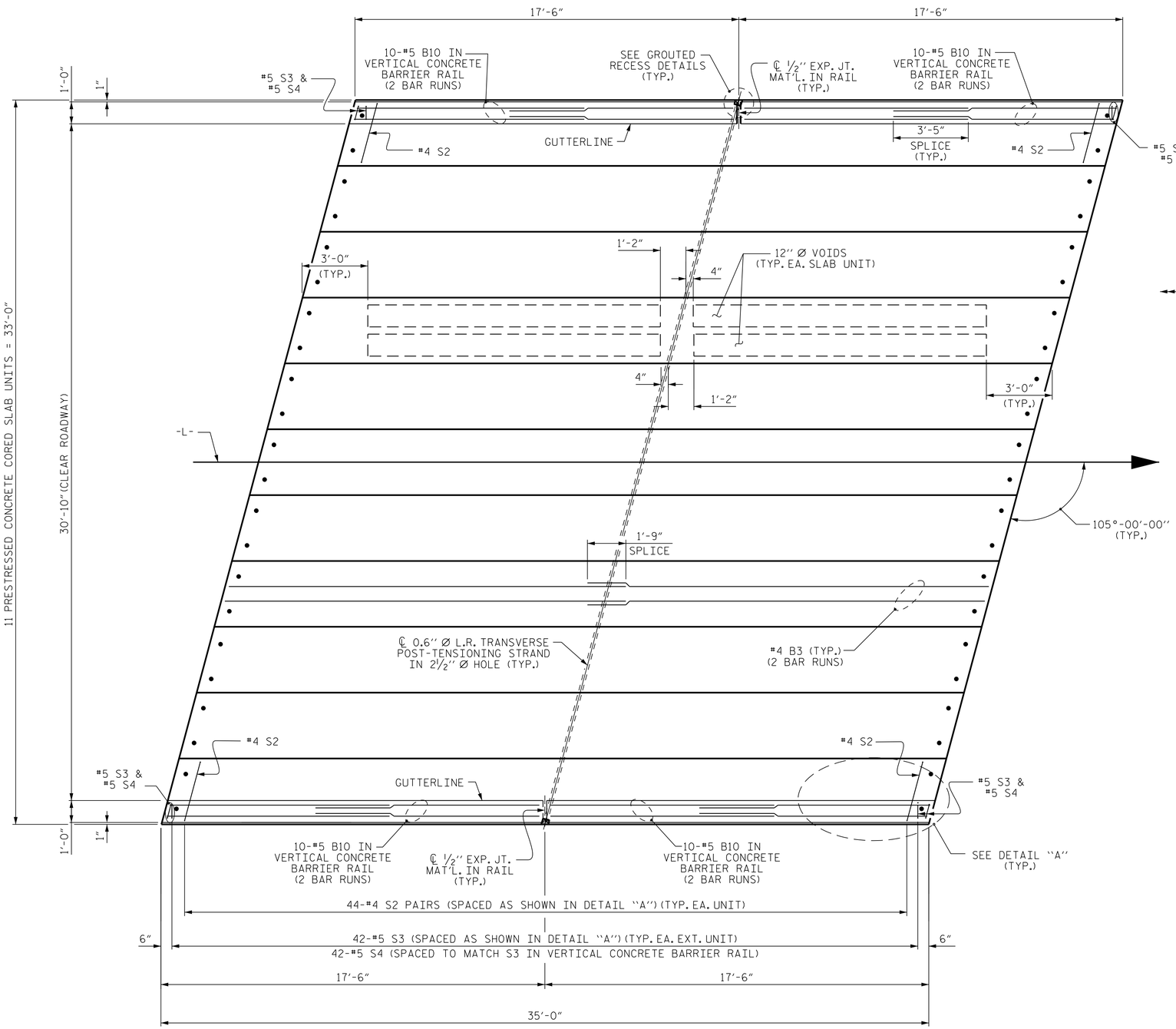

PLAN OF SPAN A

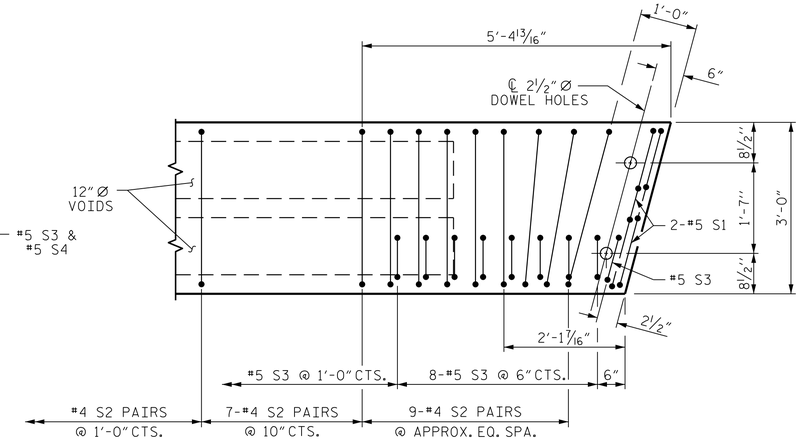

DETAIL "A"

(SIMILAR EACH END OF UNIT)
NOTE: EXTERIOR UNIT SHOWN - INTERIOR UNIT SIMILAR EXCEPT OMIT #5 S3 BARS.

PROJECT NO. 17BP.3.R.60
DUPLIN COUNTY
STATION: 21+03.00 -L-

SHEET 2 OF 5

STATE OF NORTH CAROLINA
DEPARTMENT OF TRANSPORTATION
RALEIGH

PLAN OF 35' UNIT
30'-10" CLEAR ROADWAY
105° SKEW
SPAN A

DOCUMENT NOT CONSIDERED FINAL UNLESS ALL SIGNATURES COMPLETED

CDM Smith
CDM SMITH
5400 Glenwood Avenue, Suite 400
Raleigh, NC 27612-3228
NC COA No. F-1255

DRAWN BY : VDK DATE : 03/18
CHECKED BY : THF DATE : 03/18
DESIGN ENGINEER : VDK DATE : 03/18

DWG. No.

NORTH CAROLINA PROFESSIONAL SEAL 016301 ENGINEER TING H. FANG
5/7/2018 10:48:34 AM PDT

REVISIONS							
NO.	BY:	DATE:	NO.	BY:	DATE:	SHEET NO.	S-07
1			3			TOTAL SHEETS	19
2			4				

STD. NO. 21" PCS_33_105S_35L

FILE: c:\pw_pll\tingh\d0926010\01_013_17BP3R60_SMU_CS2_007_300219.dgn
DATE: 4/3/2018 12:16:15 AM

DocuSign Envelope ID: 749495CC-F237-4B85-8F86-D7A87F630488

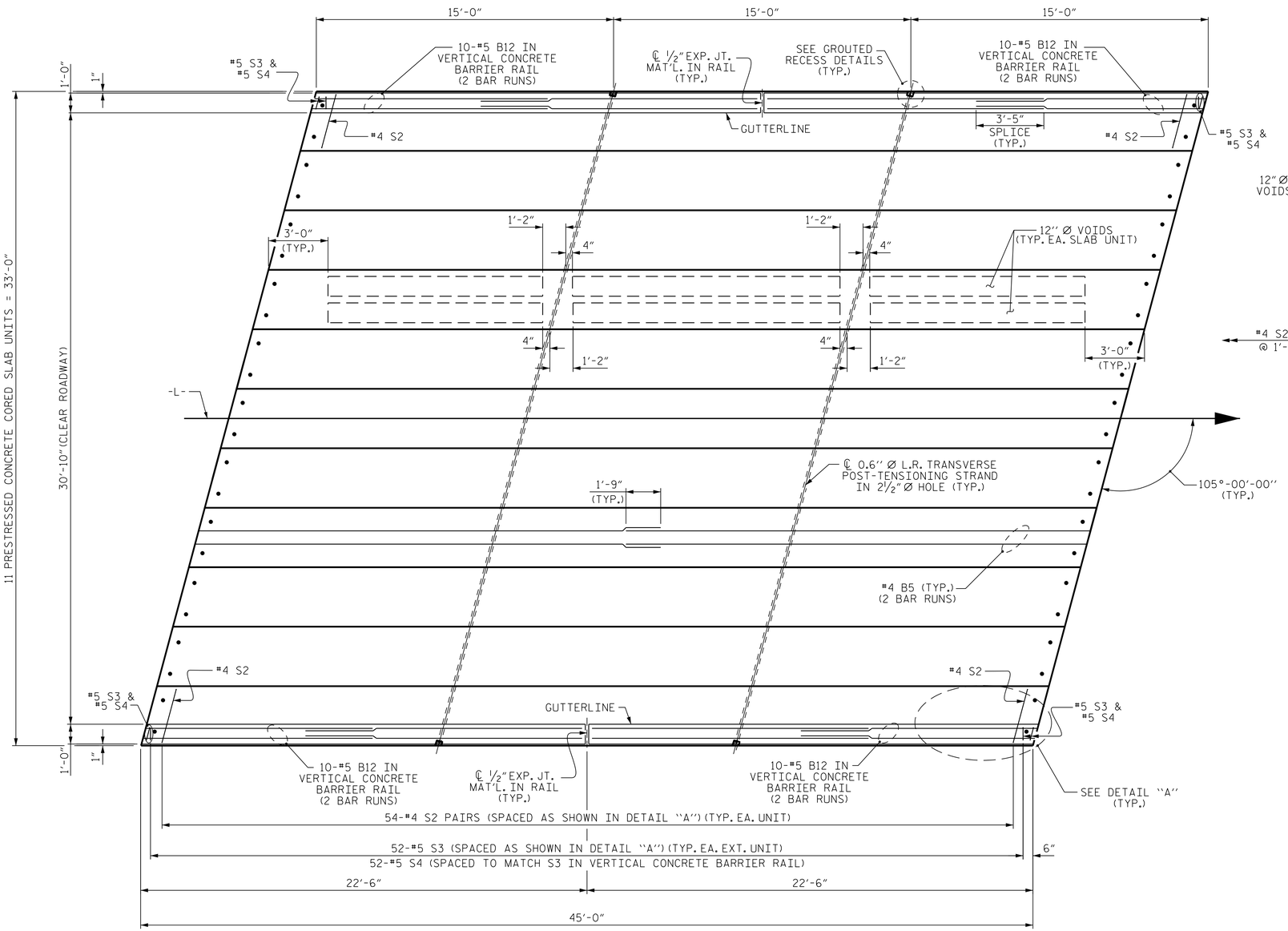

PLAN OF SPAN B

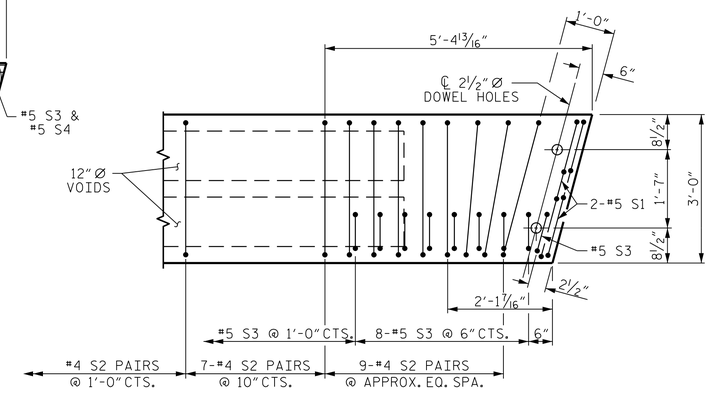

DETAIL "A"

(SIMILAR EACH END OF UNIT)
NOTE: EXTERIOR UNIT SHOWN - INTERIOR UNIT SIMILAR EXCEPT OMIT #5 S3 BARS.

PROJECT NO. 17BP.3.R.60
DUPLIN COUNTY
STATION: 21+03.00 -L-

SHEET 3 OF 5

STATE OF NORTH CAROLINA
DEPARTMENT OF TRANSPORTATION
RALEIGH

PLAN OF 45' UNIT
30'-10" CLEAR ROADWAY
105° SKEW
SPAN B

DOCUMENT NOT CONSIDERED FINAL UNLESS ALL SIGNATURES COMPLETED

CDM Smith
CDM SMITH
5400 Glenwood Avenue, Suite 400
Raleigh, NC 27612-3228
NC COA No. F-1255

DRAWN BY : VDK DATE : 03/18
CHECKED BY : THF DATE : 03/18
DESIGN ENGINEER : VDK DATE : 03/18

DWG. No.

NORTH CAROLINA PROFESSIONAL SEAL 016301 ENGINEER TING H. FANG
5/7/2018 10:48:34 AM PDT

REVISIONS						SHEET NO.
NO.	BY:	DATE:	NO.	BY:	DATE:	S-08
1			3			TOTAL SHEETS
2			4			19

FILE: c:\pw_pll\fangth\d0926010\401_015_17BP3R60_SMU_C33_008_300219.dgn
DATE: 4/3/2018 12:16:23 AM

STD. NO. 21" PCS_33_105S_45L

DocuSign Envelope ID: 749495CC-F237-4B85-8F86-D7A87F630488

CONCRETE RELEASE STRENGTH

UNIT	PSI
SPAN A (35' UNITS)	4000
SPAN B (45' UNITS)	4000

DEAD LOAD DEFLECTION AND CAMBER

ALL UNITS, 0.6" Ø L.R. STRAND	SPAN A 35' - 21" CS UNIT	SPAN B 45' - 21" CS UNIT
CAMBER (SLAB ALONE IN PLACE)	1/4" ↑	7/8" ↑
DEFLECTION DUE TO SUPERIMPOSED DEAD LOAD ✱✱	1/8" ↓	1/8" ↓
FINAL CAMBER	1/8" ↑	3/4" ↑

✱✱ INCLUDES FUTURE WEARING SURFACE

GRADE 270 STRANDS

	0.6" Ø L.R.
AREA (SQUARE INCHES)	0.217
ULTIMATE STRENGTH (LBS. PER STRAND)	58,600
APPLIED PRESTRESS (LBS. PER STRAND)	43,950

CORED SLABS REQUIRED

SPAN A (35' UNITS)

	NUMBER	LENGTH	TOTAL LENGTH
EXTERIOR C.S.	2	35'-0"	70'-0"
INTERIOR C.S.	9	35'-0"	315'-0"
TOTAL	11	35'-0"	385'-0"

SPAN B (45' UNITS)

	NUMBER	LENGTH	TOTAL LENGTH
EXTERIOR C.S.	2	45'-0"	90'-0"
INTERIOR C.S.	9	45'-0"	405'-0"
TOTAL	11	45'-0"	495'-0"

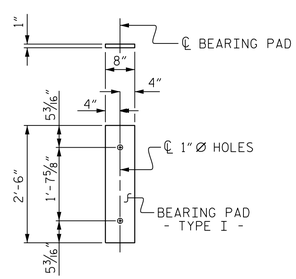

FIXED END
(TYPE I - 44 REQ'D)

ELASTOMERIC BEARING DETAILS

ELASTOMER IN ALL BEARINGS SHALL BE 50 DUROMETER HARDNESS.

BAR TYPES

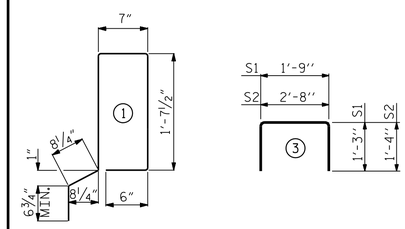

ALL BAR DIMENSIONS ARE OUT TO OUT

BILL OF MATERIAL FOR ONE CORED SLAB UNIT

SPAN A (35' - 21" CORED SLAB UNIT)

BAR	NUMBER	SIZE	TYPE	EXTERIOR UNIT LENGTH	EXTERIOR UNIT WEIGHT	INTERIOR UNIT LENGTH	INTERIOR UNIT WEIGHT
B3	4	#4	STR	18'-3"	49	18'-3"	49
S1	8	#5	3	4'-3"	35	4'-3"	35
S2	88	#4	3	5'-4"	314	5'-4"	314
✱ S3	44	#5	1	5'-7"	256		
REINFORCING STEEL			LBS.		398		398
✱ EPOXY COATED REINFORCING STEEL			LBS.		256		
5000 P.S.I. CONCRETE			CU. YDS.		5.2		5.2
0.6" Ø L.R. STRANDS			No.		9		9

SPAN B (45' - 21" CORED SLAB UNIT)

BAR	NUMBER	SIZE	TYPE	EXTERIOR UNIT LENGTH	EXTERIOR UNIT WEIGHT	INTERIOR UNIT LENGTH	INTERIOR UNIT WEIGHT
B5	4	#4	STR	23'-3"	62	25'-9"	62
S1	8	#5	3	4'-3"	35	4'-3"	35
S2	108	#4	3	5'-4"	385	5'-4"	385
✱ S3	54	#5	1	5'-7"	314		
REINFORCING STEEL			LBS.		482		482
✱ EPOXY COATED REINFORCING STEEL			LBS.		314		
5000 P.S.I. CONCRETE			CU. YDS.		6.6		6.6
0.6" Ø L.R. STRANDS			No.		13		13

NOTES

ALL PRESTRESSING STRANDS SHALL BE 7-WIRE LOW RELAXATION GRADE 270 STRANDS AND SHALL CONFORM TO AASHTO M203 EXCEPT FOR SAMPLING REQUIREMENTS WHICH SHALL BE IN ACCORDANCE WITH THE STANDARD SPECIFICATIONS.

ALL REINFORCING STEEL CAST WITH THE CORED SLAB SECTIONS SHALL BE GRADE 60 AND SHALL BE INCLUDED IN THE UNIT PRICE BID FOR PRESTRESSED CONCRETE CORED SLABS.

RECESSES FOR TRANSVERSE STRANDS SHALL BE GROUTED AFTER THE TENSIONING OF THE STRANDS.

THE 2 1/2" Ø DOWEL HOLES AT FIXED ENDS OF SLAB SECTIONS SHALL BE FILLED WITH NON-SHRINK GROUT.

THE BACKER RODS SHALL CONFORM TO THE REQUIREMENTS OF TYPE M BOND BREAKER. SEE SECTION 1028 OF THE STANDARD SPECIFICATIONS.

WHEN CORED SLABS ARE CAST, AN INTERNAL HOLD-DOWN SYSTEM SHALL BE EMPLOYED TO PREVENT VOIDS FROM RISING OR MOVING SIDEWAYS. AT LEAST SIX WEEKS PRIOR TO CASTING CORED SLABS, THE CONTRACTOR SHALL SUBMIT TO THE ENGINEER FOR REVIEW AND COMMENT, DETAILED DRAWINGS OF THE PROPOSED HOLD-DOWN SYSTEM. IN ADDITION TO STRUCTURAL DETAILS, LOCATION AND SPACING OF THE HOLD-DOWNS SHALL BE INDICATED.

ALL REINFORCING STEEL IN THE VERTICAL CONCRETE BARRIER RAIL SHALL BE EPOXY COATED.

PRESTRESSING STRANDS SHALL BE CUT FLUSH WITH THE CORED SLAB UNIT ENDS.

APPLY EPOXY PROTECTIVE COATING TO CORED SLAB UNIT ENDS.

GROOVED CONTRACTION JOINTS, 1/2" IN DEPTH, SHALL BE TOOLED IN ALL EXPOSED FACES OF THE BARRIER RAIL AND IN ACCORDANCE WITH ARTICLE 825-10(B) OF THE STANDARD SPECIFICATIONS. A CONTRACTION JOINT SHALL BE LOCATED AT EACH THIRD POINT BETWEEN BARRIER RAIL EXPANSION JOINTS. ONLY ONE CONTRACTION JOINT IS REQUIRED AT MIDPOINT OF BARRIER RAIL SEGMENTS LESS THAN 20 FEET IN LENGTH AND NO CONTRACTION JOINTS ARE REQUIRED FOR THOSE SEGMENTS LESS THAN 10 FEET IN LENGTH.

FLAME CUTTING OF THE TRANSVERSE POST-TENSIONING STRAND IS NOT ALLOWED.

THE TRANSFER OF LOAD FROM THE ANCHORAGES TO THE CORED SLAB UNIT SHALL BE DONE WHEN THE CONCRETE HAS REACHED A COMPRESSIVE STRENGTH OF NOT LESS THAN THE REQUIRED STRENGTH SHOWN IN THE "CONCRETE RELEASE STRENGTH" TABLE.

FOR GROUT FOR STRUCTURES, SEE SPECIAL PROVISIONS.

THE PERMITTED THREADED INSERTS ARE DETAILED AS AN OPTION FOR THE CONTRACTOR TO ATTACH FALSEWORK AND FORMWORK DURING CONSTRUCTION.

THE PERMITTED THREADED INSERTS IN THE EXTERIOR UNITS SHALL BE SIZED BY THE CONTRACTOR, SPACED AT 4'-0" CENTERS AND GALVANIZED IN ACCORDANCE WITH SECTION 1076 OF THE STANDARD SPECIFICATIONS. STAINLESS STEEL THREADED INSERTS MAY BE USED AS AN ALTERNATE.

THE PERMITTED THREADED INSERTS SHALL BE GROUTED BY THE CONTRACTOR IMMEDIATELY FOLLOWING REMOVAL OF THE FALSEWORK.

THE COST OF THE PERMITTED THREADED INSERTS SHALL BE INCLUDED IN THE PRICE BID FOR THE PRECAST UNITS.

PROJECT NO. 17BP.3.R.60
DUPLIN COUNTY
STATION: 21+03.00 -L-

SHEET 4 OF 5

STATE OF NORTH CAROLINA
DEPARTMENT OF TRANSPORTATION
RALEIGH

3'-0" X 1'-9" PRESTRESSED CONCRETE CORED SLAB UNIT 105° SKEW SPANS A & B

DOCUMENT NOT CONSIDERED FINAL UNLESS ALL SIGNATURES COMPLETED

CDM Smith
CDM SMITH
5400 Glenwood Avenue, Suite 400
Raleigh, NC 27612-3228
NC COA No. F-1255

DRAWN BY : VDK DATE : 03/18
CHECKED BY : THF DATE : 03/18
DESIGN ENGINEER : VDK DATE : 03/18

DWG. No.

NORTH CAROLINA PROFESSIONAL SEAL 016301 ENGINEER TING H. FANG
5/7/2018 10:48:34 AM

REVISIONS						SHEET NO.
NO.	BY:	DATE:	NO.	BY:	DATE:	S-9
1			3			TOTAL SHEETS
2			4			19

STD. NO. 21" BOM INFO_33_105S

FILE: c:\pw_pll\fangth\d0926010\01_017_17BP3R60_SMU_C54_009_300219.dgn
DATE: 4/13/2018 12:16:30 AM

DocuSign Envelope ID: 749495CC-F237-4B85-8F86-D7A87F630488

BILL OF MATERIAL FOR VERTICAL CONCRETE BARRIER RAIL

SPAN A (35' UNIT)

BAR	BARS PER PAIR OF EXTERIOR UNITS	TOTAL NO.	SIZE	TYPE	LENGTH	WEIGHT
✳B10	80	80	#5	STR	10'-5"	869
✳ S4	88	88	#5	2	7'-2"	658
✳ EPOXY COATED REINFORCING STEEL				LBS.		1527
CLASS AA CONCRETE				CU.YDS.		9.0
TOTAL VERTICAL CONCRETE BARRIER RAIL				LN. FT.		70.13

SPAN B (45' UNIT)

BAR	BARS PER PAIR OF EXTERIOR UNITS	TOTAL NO.	SIZE	TYPE	LENGTH	WEIGHT
✳B12	80	80	#5	STR	12'-11"	1078
✳ S4	108	108	#5	2	7'-2"	807
✳ EPOXY COATED REINFORCING STEEL				LBS.		1885
CLASS AA CONCRETE				CU.YDS.		11.5
TOTAL VERTICAL CONCRETE BARRIER RAIL				LN. FT.		90.13

TOTAL VERTICAL CONCRETE BARRIER RAIL FOR ENTIRE BRIDGE: 160.26 LN.FT.

BAR TYPE

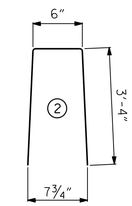

ALL BAR DIMENSIONS ARE OUT TO OUT

GUTTERLINE ASPHALT THICKNESS & RAIL HEIGHT

	ASPHALT OVERLAY THICKNESS @ MID-SPAN	RAIL HEIGHT @ MID-SPAN
SPAN A (35' UNITS)	2⅝"	3'-8⅝"
SPAN B (45' UNITS)	2"	3'-8"

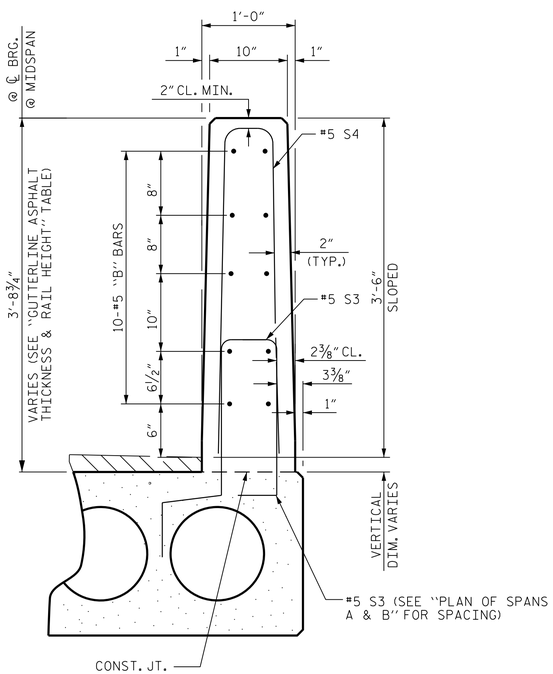

VERTICAL CONCRETE BARRIER RAIL SECTION

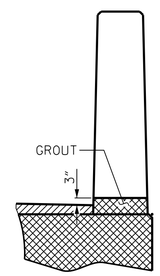

SECTION T-T
AT OPEN JOINT AT BENT
(THIS IS TO BE USED WHERE FOAM JOINT IS NOT USED)

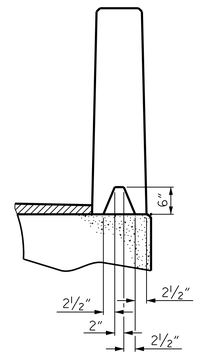

SECTION S-S
AT DAM IN OPEN JOINT
(THIS IS TO BE USED ONLY WHEN SLIP FORM IS USED)

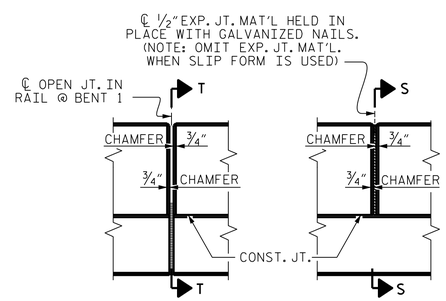

ELEVATION AT EXPANSION JOINTS

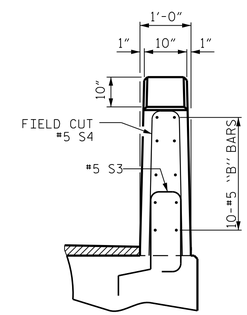

END VIEW

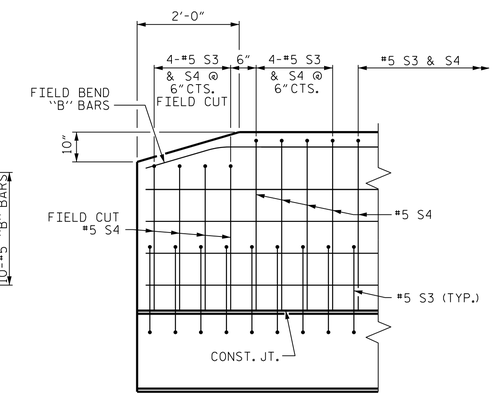

SIDE VIEW

END OF RAIL DETAILS

PROJECT NO. 17BP.3.R.60
DUPLIN COUNTY
STATION: 21+03.00 -L-

SHEET 5 OF 5

STATE OF NORTH CAROLINA
DEPARTMENT OF TRANSPORTATION
RALEIGH

3'-0" X 1'-9"
PRESTRESSED CONCRETE
CORED SLAB UNIT
105° SKEW
SPANS A & B

DOCUMENT NOT CONSIDERED FINAL UNLESS ALL SIGNATURES COMPLETED

CDM Smith
CDM SMITH
5400 Glenwood Avenue, Suite 400
Raleigh, NC 27612-3228
NC COA No. F-1255

DRAWN BY : VDK DATE : 03/18
CHECKED BY : THF DATE : 03/18
DESIGN ENGINEER : VDK DATE : 03/18

DWG. No.

NORTH CAROLINA PROFESSIONAL SEAL 016301 ENGINEER TING H. FANG
5/7/2018 10:48:34 AM

REVISIONS						SHEET NO.
NO.	BY:	DATE:	NO.	BY:	DATE:	S-10
1			3			TOTAL SHEETS
2			4			19

STD. NO. 21" PCS3_33_105S

FILE: c:\pw_pll\length\d0928010\dgn_019_17BP.3.R.60_SMU_CS5_010_S00219.dgn
DATE: 4/5/2018 12:16:38 AM

DocuSign Envelope ID: 749495CC-F237-4B85-8F86-D7A87F630488

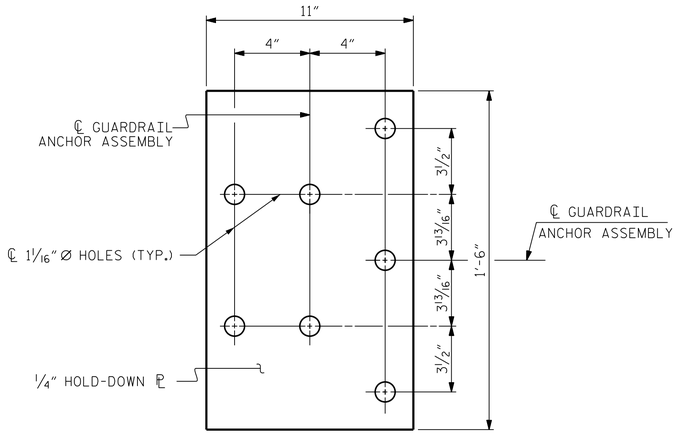

PLAN

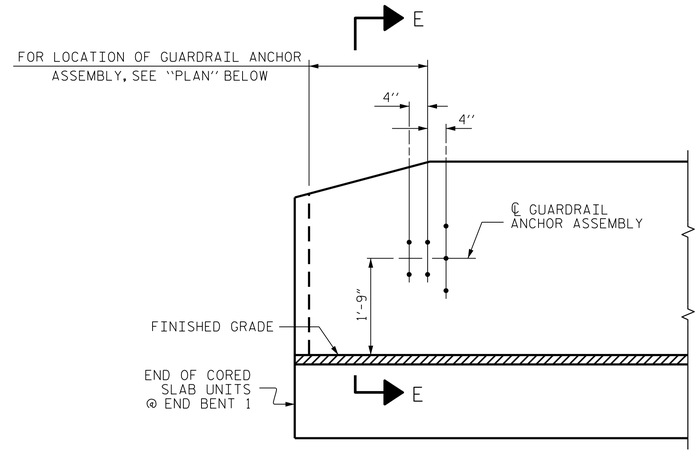

ELEVATION

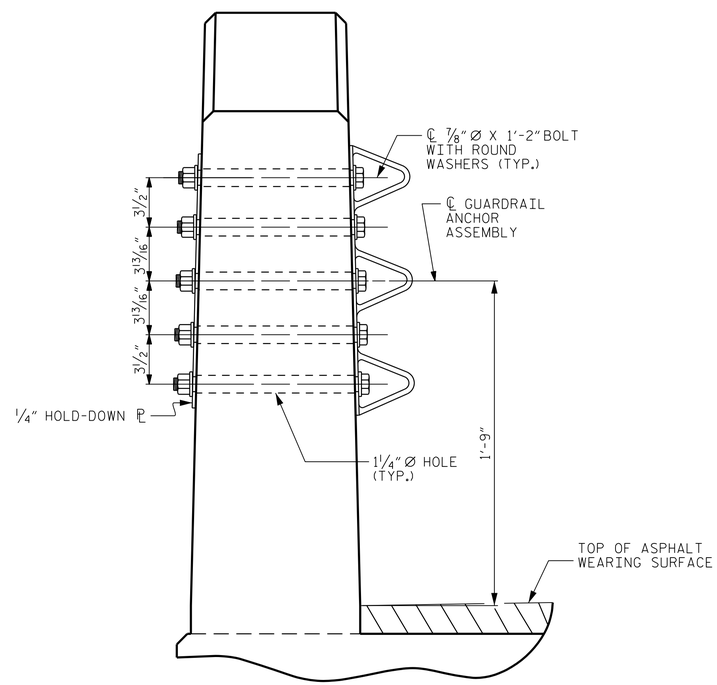

SECTION E-E

GUARDRAIL ANCHOR ASSEMBLY DETAILS

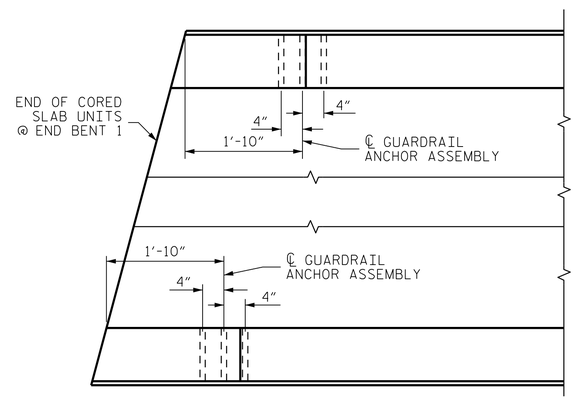

PLAN

LOCATION OF ANCHORS FOR GUARDRAIL

END BENT 1 SHOWN, END BENT 2 SIMILAR.

NOTES

THE GUARDRAIL ANCHOR ASSEMBLY SHALL CONSIST OF A 1/4" HOLD DOWN PLATE AND 7 - 7/8" Ø BOLTS WITH NUTS AND WASHERS.

THE HOLD-DOWN PLATE SHALL CONFORM TO AASHTO M270 GRADE 36. AFTER FABRICATION, THE HOLD-DOWN PLATE SHALL BE HOT-DIP GALVANIZED IN ACCORDANCE WITH AASHTO M111.

BOLTS SHALL CONFORM TO THE REQUIREMENTS OF ASTM A307 AND NUTS SHALL CONFORM TO THE REQUIREMENTS OF AASHTO M291. BOLTS, NUTS AND WASHERS SHALL BE GALVANIZED. (AT THE CONTRACTOR'S OPTION, STAINLESS STEEL BOLTS, NUTS AND WASHERS MAY BE USED AS AN ALTERNATE FOR THE 7/8" Ø GALVANIZED BOLTS, NUTS AND WASHERS. THEY SHALL CONFORM TO OR EXCEED THE MECHANICAL REQUIREMENTS OF ASTM A307. THE USE OF THIS ALTERNATE SHALL BE APPROVED BY THE ENGINEER.)

THE GUARDRAIL ANCHOR ASSEMBLY IS REQUIRED AT ALL POINTS WHERE APPROACH GUARDRAIL IS TO BE ATTACHED TO THE END OF BARRIER RAIL. FOR POINTS OF ATTACHMENT, SEE SKETCH.

AFTER INSTALLATION, THE EXPOSED THREAD OF THE BOLT SHALL BE BURRED WITH A SHARP POINTED TOOL.

THE COST OF THE GUARDRAIL ANCHOR ASSEMBLY SHALL BE INCLUDED IN THE UNIT CONTRACT PRICE BID FOR VERTICAL CONCRETE BARRIER RAIL.

THE VERTICAL REINFORCING BARS MAY BE SHIFTED SLIGHTLY IN THE VERTICAL CONCRETE BARRIER RAIL TO CLEAR ASSEMBLY BOLTS.

THE 1 1/4" Ø HOLES SHALL BE FORMED OR DRILLED WITH A CORE BIT. IMPACT TOOLS WILL NOT BE PERMITTED. ANY CONCRETE DAMAGED BY THIS WORK SHALL BE REPAIRED TO THE SATISFACTION OF THE ENGINEER.

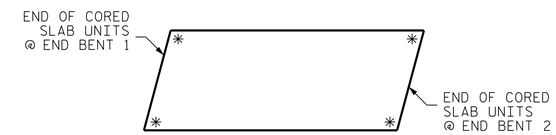

SKETCH SHOWING POINTS OF ATTACHMENT

* DENOTES GUARDRAIL ANCHOR ASSEMBLY

PROJECT NO. 17BP.3.R.60
DUPLIN COUNTY
STATION: 21+03.00 -L-

DOCUMENT NOT CONSIDERED FINAL UNLESS ALL SIGNATURES COMPLETED

CDM Smith
CDM SMITH
5400 Glenwood Avenue, Suite 400
Raleigh, NC 27612-3228
NC COA No. F-1255

DRAWN BY : VDK DATE : 03/18
CHECKED BY : THF DATE : 03/18
DESIGN ENGINEER : VDK DATE : 03/18

DWG. No.

NORTH CAROLINA PROFESSIONAL SEAL 016301 ENGINEER TING H. FANG
5/7/2018 10:48:34 AM

STATE OF NORTH CAROLINA
DEPARTMENT OF TRANSPORTATION
RALEIGH
SUPERSTRUCTURE

STANDARD GUARDRAIL ANCHORAGE FOR VERTICAL CONCRETE BARRIER RAIL

REVISIONS						SHEET NO.
NO.	BY:	DATE:	NO.	BY:	DATE:	S-11
1			3			TOTAL SHEETS
2			4			19

STD. NO. GRA3

FILE: c:\pw_pll\langth\d0926010\401_021_17BP3R60_SMU_GR_011_300219.dgn
DATE: 4/12/2018 12:16:46 AM

DocuSign Envelope ID: 749495CC-F237-4B85-8F86-D7A87F630488

NOTES

STIRRUPS IN CAP MAY BE SHIFTED AS NECESSARY TO CLEAR DOWELS.

THE CONCRETE IN THE SHADED AREA OF THE WING SHALL BE POURED AFTER THE VERTICAL CONCRETE BARRIER RAIL IS CAST IF SLIP FORMING IS USED.

FOR PILE SPLICE DETAILS, SEE SHEET 4 OF 4.

FOR WING DETAILS, SEE SHEET 3 OF 4.

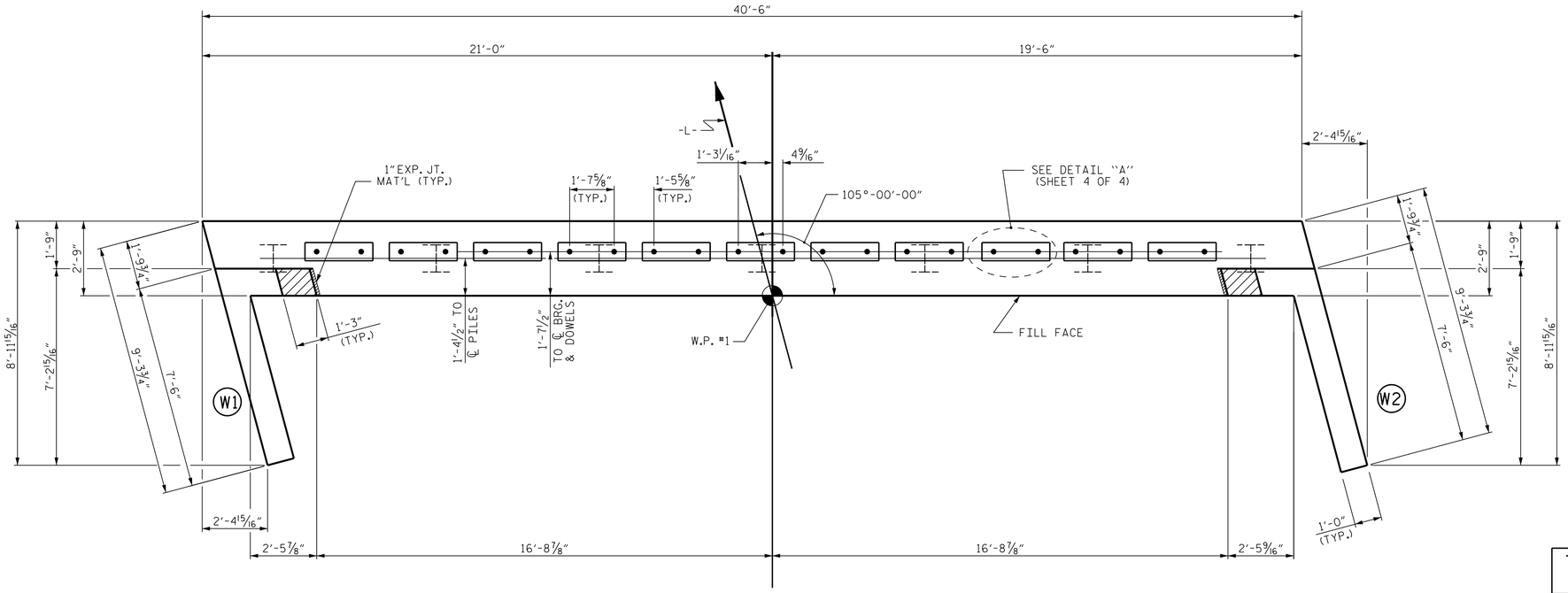

PLAN

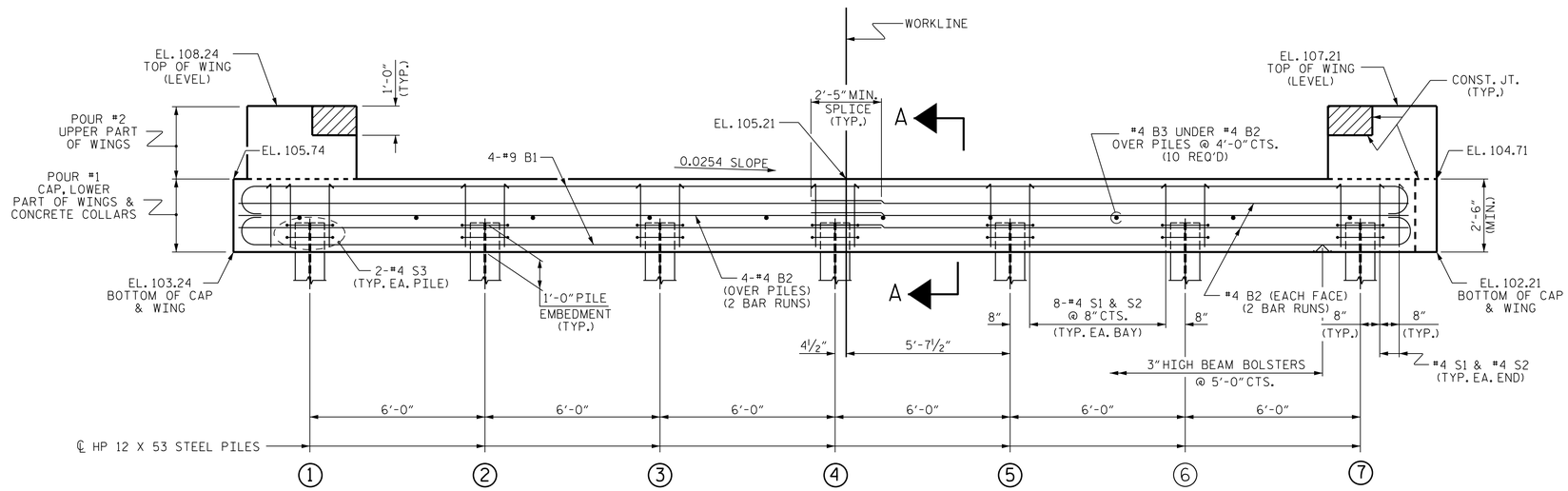

ELEVATION

WINGS NOT SHOWN FOR CLARITY.
FOR SECTION A-A, SEE SHEET 4 OF 4.
CONCRETE COLLARS FOR STEEL PILES NOT SHOWN IN PLAN AND ELEVATION VIEWS FOR CLARITY.
SEE "CORROSION PROTECTION FOR STEEL PILES DETAIL", SHEET 4 OF 4.

TOP OF PILE ELEVATIONS	
1	104.17
2	104.02
3	103.86
4	103.71
5	103.56
6	103.41
7	103.25

PROJECT NO. 17BP.3.R.60
DUPLIN COUNTY
STATION: 21+03.00 -L-

SHEET 1 OF 4

DOCUMENT NOT CONSIDERED FINAL UNLESS ALL SIGNATURES COMPLETED

CDM Smith
CDM SMITH
5400 Glenwood Avenue, Suite 400
Raleigh, NC 27612-3228
NC COA No. F-1255

DRAWN BY : VDK DATE : 03/18
CHECKED BY : THF DATE : 03/18
DESIGN ENGINEER : VDK DATE : 03/18

DWG. No.

NORTH CAROLINA PROFESSIONAL SEAL 016301 ENGINEER TING H. FANG
5/7/2018 10:48:34 AM

STATE OF NORTH CAROLINA
DEPARTMENT OF TRANSPORTATION
RALEIGH

SUBSTRUCTURE

END BENT 1

REVISIONS						SHEET NO.
NO.	BY:	DATE:	NO.	BY:	DATE:	S-12
1			3			TOTAL SHEETS
2			4			19

STD. NO. EB_33_105S

FILE: c:\pw_pll\fangth\d0926010\d01_023_17BP3R60_SMU_E1_012_300219.dgn
DATE: 4/9/2018 12:16:53 AM

DocuSign Envelope ID: 749495CC-F237-4B85-8F86-D7A87F630488

NOTES

STIRRUPS IN CAP MAY BE SHIFTED AS NECESSARY TO CLEAR DOWELS.

THE CONCRETE IN THE SHADED AREA OF THE WING SHALL BE POURED AFTER THE VERTICAL CONCRETE BARRIER RAIL IS CAST IF SLIP FORMING IS USED.

FOR PILE SPLICE DETAILS, SEE SHEET 4 OF 4.

FOR WING DETAILS, SEE SHEET 3 OF 4.

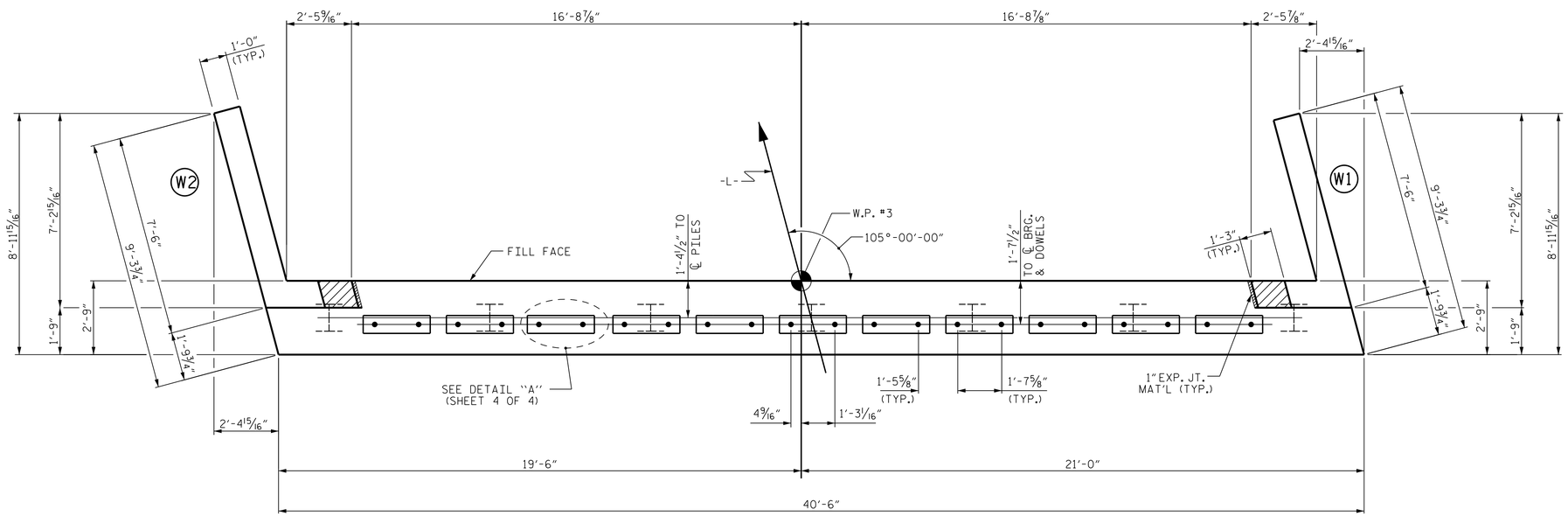

PLAN

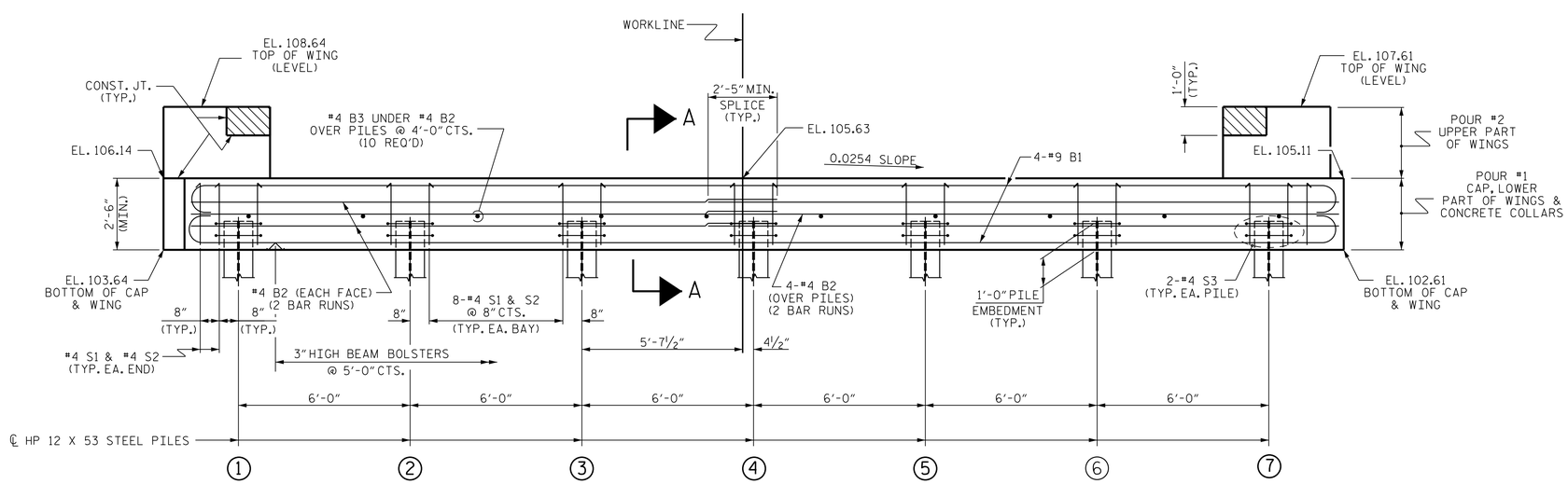

ELEVATION

WINGS NOT SHOWN FOR CLARITY.
FOR SECTION A-A, SEE SHEET 4 OF 4.
CONCRETE COLLARS FOR STEEL PILES NOT SHOWN IN PLAN AND ELEVATION VIEWS FOR CLARITY.
SEE "CORROSION PROTECTION FOR STEEL PILES DETAIL", SHEET 4 OF 4.

TOP OF PILE ELEVATIONS	
1	104.57
2	104.42
3	104.26
4	104.11
5	103.96
6	103.81
7	103.65

PROJECT NO. 17BP.3.R.60
DUPLIN COUNTY
STATION: 21+03.00 -L-

SHEET 3 OF 5

STATE OF NORTH CAROLINA
DEPARTMENT OF TRANSPORTATION
RALEIGH

SUBSTRUCTURE

END BENT 2

DOCUMENT NOT CONSIDERED FINAL UNLESS ALL SIGNATURES COMPLETED

CDM Smith
CDM SMITH
5400 Glenwood Avenue, Suite 400
Raleigh, NC 27612-3228
NC COA No. F-1255

DRAWN BY : VDK DATE : 03/18
CHECKED BY : THF DATE : 03/18
DESIGN ENGINEER : VDK DATE : 03/18

DWG. No.

NORTH CAROLINA PROFESSIONAL SEAL 016301 ENGINEER TING H. FANG
5/7/2018 10:48:34 AM EDT

REVISIONS								SHEET NO.
NO.	BY:	DATE:	NO.	BY:	DATE:			S-13
1			3					TOTAL SHEETS
2			4					19

STD. NO. EB_33_105S

FILE: c:\pw_pll\angelh\d0926010\401_025_17BP3R60_SMU_E2_013_300219.dgn
DATE: 4/3/2018 12:17:01 AM

DocuSign Envelope ID: 749495CC-F237-4B85-8F86-D7A87F630488

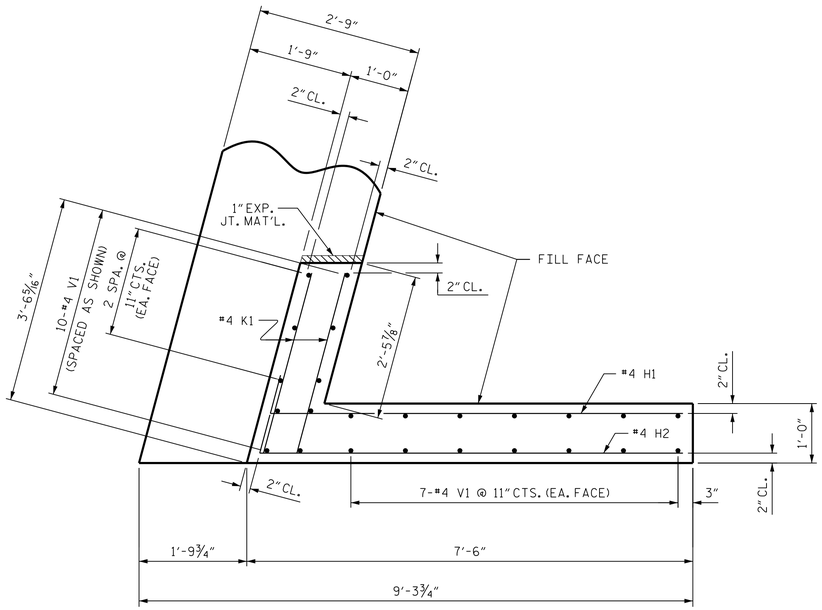

PLAN OF WING (W1)

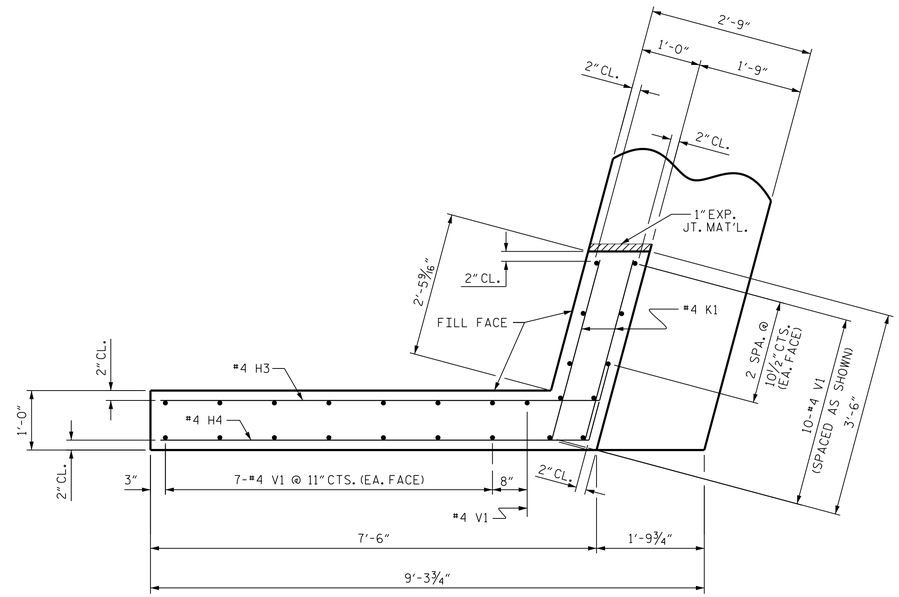

PLAN OF WING (W2)

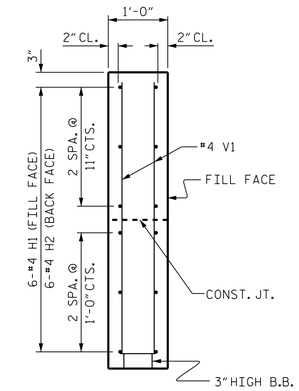

SECTION X-X

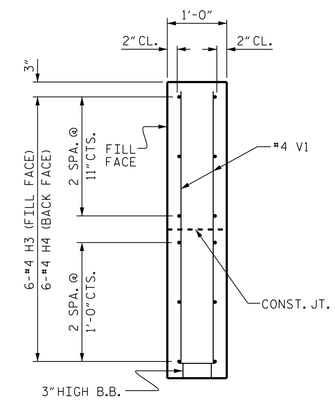

SECTION Y-Y

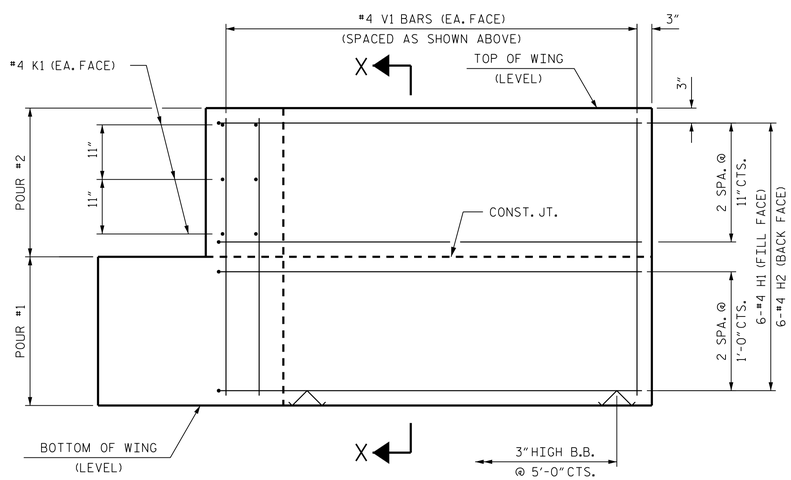

ELEVATION OF WING (W1)

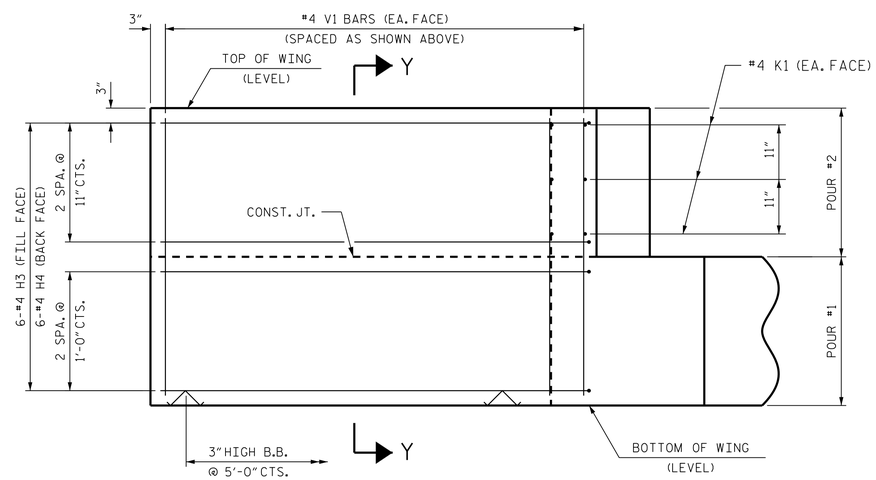

ELEVATION OF WING (W2)

WING DETAILS

PROJECT NO. 17BP.3.R.60
DUPLIN COUNTY
STATION: 21+03.00 -L-

SHEET 3 OF 4

DOCUMENT NOT CONSIDERED FINAL UNLESS ALL SIGNATURES COMPLETED

CDM Smith
CDM SMITH
5400 Glenwood Avenue, Suite 400
Raleigh, NC 27612-3228
NC COA No. F-1255

DRAWN BY : VDK DATE : 03/18
CHECKED BY : THF DATE : 03/18
DESIGN ENGINEER : VDK DATE : 03/18

DWG. No.

NORTH CAROLINA PROFESSIONAL SEAL 016301 ENGINEER TING H. FANG
5/7/2018 10:48:34 AM EDT

STATE OF NORTH CAROLINA
DEPARTMENT OF TRANSPORTATION
RALEIGH

SUBSTRUCTURE

END BENTS 1 & 2
WING DETAILS

REVISIONS							SHEET NO.
NO.	BY:	DATE:	NO.	BY:	DATE:		S-14
1			3				TOTAL SHEETS
2			4				19

FILE: c:\pw_pll\fangth\d0926010\d01_027_17BP3R60_SMU_E3_014_300219.dgn
DATE: 4/13/2018 12:17:09 AM

STD. NO. EB_33_105S

DocuSign Envelope ID: 749495CC-F237-4B85-8F86-D7A87F630488

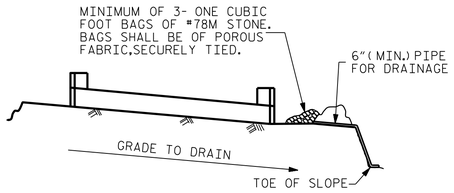

BAGGED STONE AND PIPE SHALL BE PLACED IMMEDIATELY AFTER COMPLETION OF END BENT EXCAVATION. PIPE MAY BE EITHER CONCRETE, CORRUGATED STEEL, CORRUGATED ALUMINUM ALLOY, OR CORRUGATED PLASTIC. PERFORATED PIPE WILL NOT BE ALLOWED.

BAGGED STONE SHALL REMAIN IN PLACE UNTIL THE ENGINEER DIRECTS THAT IT BE REMOVED. THE CONTRACTOR SHALL REMOVE AND DISPOSE OF SILT ACCUMULATIONS AT BAGGED STONE WHEN SO DIRECTED BY THE ENGINEER. BAGS SHALL BE REMOVED AND REPLACED WHENEVER THE ENGINEER DETERMINES THAT THEY HAVE DETERIORATED AND LOST THEIR EFFECTIVENESS.

NO SEPARATE PAYMENT WILL BE MADE FOR THIS WORK AND THE ENTIRE COST OF THIS WORK SHALL BE INCLUDED IN THE UNIT CONTRACT PRICE BID FOR THE SEVERAL PAY ITEMS.

TEMPORARY DRAINAGE AT END BENT

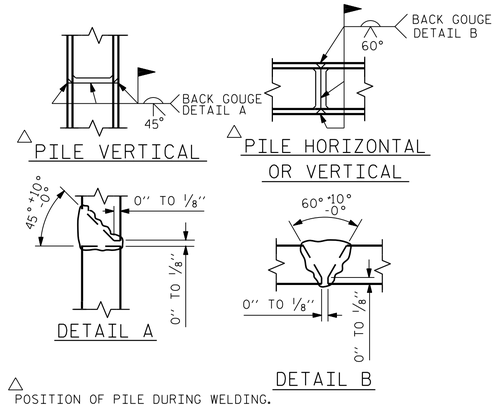

△ POSITION OF PILE DURING WELDING.

PILE SPLICE DETAILS

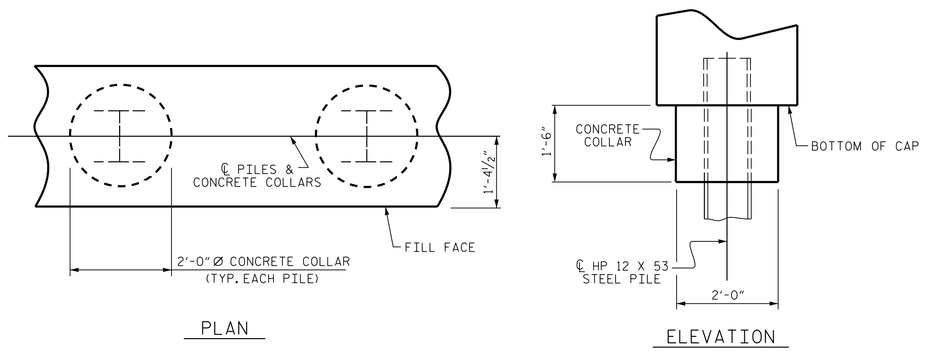

CORROSION PROTECTION FOR STEEL PILES DETAIL

(END BENT 1 SHOWN, END BENT 2 SIMILAR BY ROTATION)

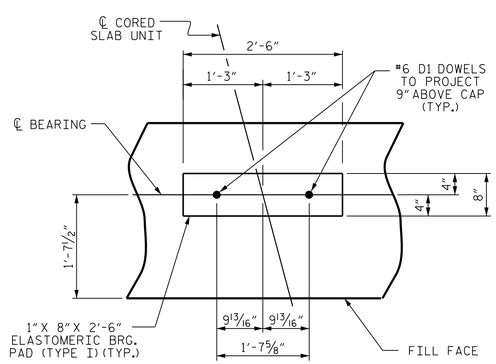

DETAIL "A"

(END BENT 1 SHOWN, END BENT 2 SIMILAR BY ROTATION)

BAR TYPES

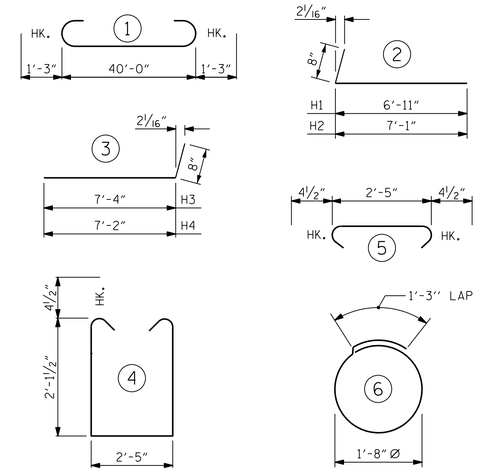

ALL BAR DIMENSIONS ARE OUT TO OUT.

BILL OF MATERIAL

FOR ONE END BENT

(2 REQUIRED)

BAR	NO.	SIZE	TYPE	LENGTH	WEIGHT
B1	8	#9	1	42'-6"	1156
B2	16	#4	STR	21'-4"	228
B3	10	#4	STR	2'-5"	16
D1	22	#6	STR	1'-6"	50
H1	6	#4	2	7'-7"	30
H2	6	#4	2	7'-9"	31
H3	6	#4	3	8'-0"	32
H4	6	#4	3	7'-10"	31
K1	12	#4	STR	3'-1"	25
S1	52	#4	4	7'-5"	258
S2	52	#4	5	3'-2"	110
S3	14	#4	6	6'-6"	61
V1	49	#4	STR	4'-8"	153
REINFORCING STEEL					2181 LBS.

CLASS A CONCRETE BREAKDOWN

POUR #1	CAP, LOWER PART OF WINGS & COLLARS	12.7 C.Y.
POUR #2	UPPER PART OF WINGS	1.8 C.Y.
TOTAL CLASS A CONCRETE		14.5 C.Y.

END BENT 1		END BENT 2	
HP 12 X 53 STEEL PILES		HP 12 X 53 STEEL PILES	
NO: 7	LIN. FT.= 350	NO: 7	LIN. FT.= 385
PILE DRIVING EQUIP. SETUP	EA. 7	PILE DRIVING EQUIP. SETUP	EA. 7
PILE REDRIVES	EA. 4	PILE REDRIVES	EA. 4

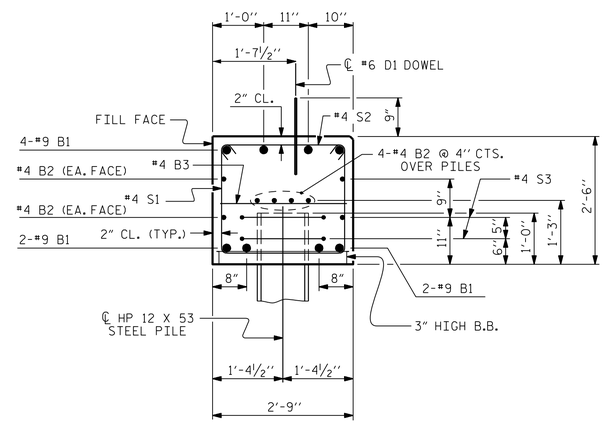

SECTION A-A

(CONCRETE COLLAR NOT SHOWN FOR CLARITY. SEE "CORROSION PROTECTION FOR STEEL PILES DETAIL.")

PROJECT NO. 17BP.3.R.60

DUPLIN COUNTY

STATION: 21+03.00 -L-

SHEET 4 OF 4

STATE OF NORTH CAROLINA
DEPARTMENT OF TRANSPORTATION
RALEIGH

SUBSTRUCTURE

END BENTS 1 & 2 DETAILS

DOCUMENT NOT CONSIDERED FINAL UNLESS ALL SIGNATURES COMPLETED

CDM Smith
CDM SMITH
5400 Glenwood Avenue, Suite 400
Raleigh, NC 27612-3228
NC COA No. F-1255

DRAWN BY :	VDK	DATE :	03/18
CHECKED BY :	THF	DATE :	03/18
DESIGN ENGINEER :	VDK	DATE :	03/18

DWG. No.

NORTH CAROLINA PROFESSIONAL SEAL 016301 ENGINEER LING H. FANG
5/7/2018 10:48:34 AM

REVISIONS						SHEET NO.
NO.	BY:	DATE:	NO.	BY:	DATE:	S-15
1			3			TOTAL SHEETS
2			4			19

FILE: c:\pw_pll\longfh\d0926010\401_029_17BP.3.R.60_SMU_E4_015_300219.dgn
DATE: 4/13/2018 12:17:16 AM

STD. NO. EB_33_105S

DocuSign Envelope ID: 749495CC-F237-4B85-8F86-D7A87F630488

NOTES

STIRRUPS IN CAP MAY BE SHIFTED AS NECESSARY TO CLEAR DOWELS.

★ INVERT ALTERNATE STIRRUPS.

GALVANIZE THE TOP OF EACH INTERIOR BENT PILE A MINIMUM OF 26 FEET. GALVANIZE IN ACCORDANCE WITH SECTION 1076 OF THE STANDARD SPECIFICATIONS.

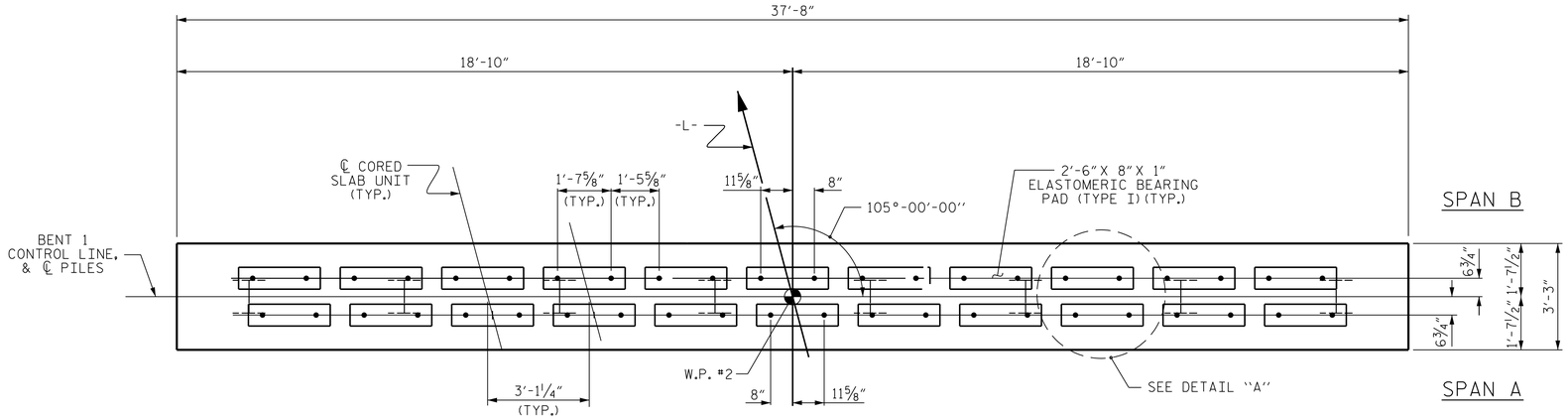

PLAN

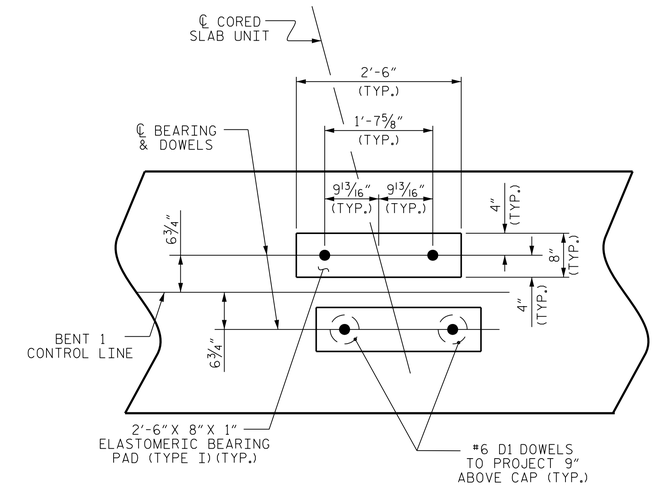

DETAIL "A"

(DIMENSIONS ARE TYPICAL EACH BEARING)

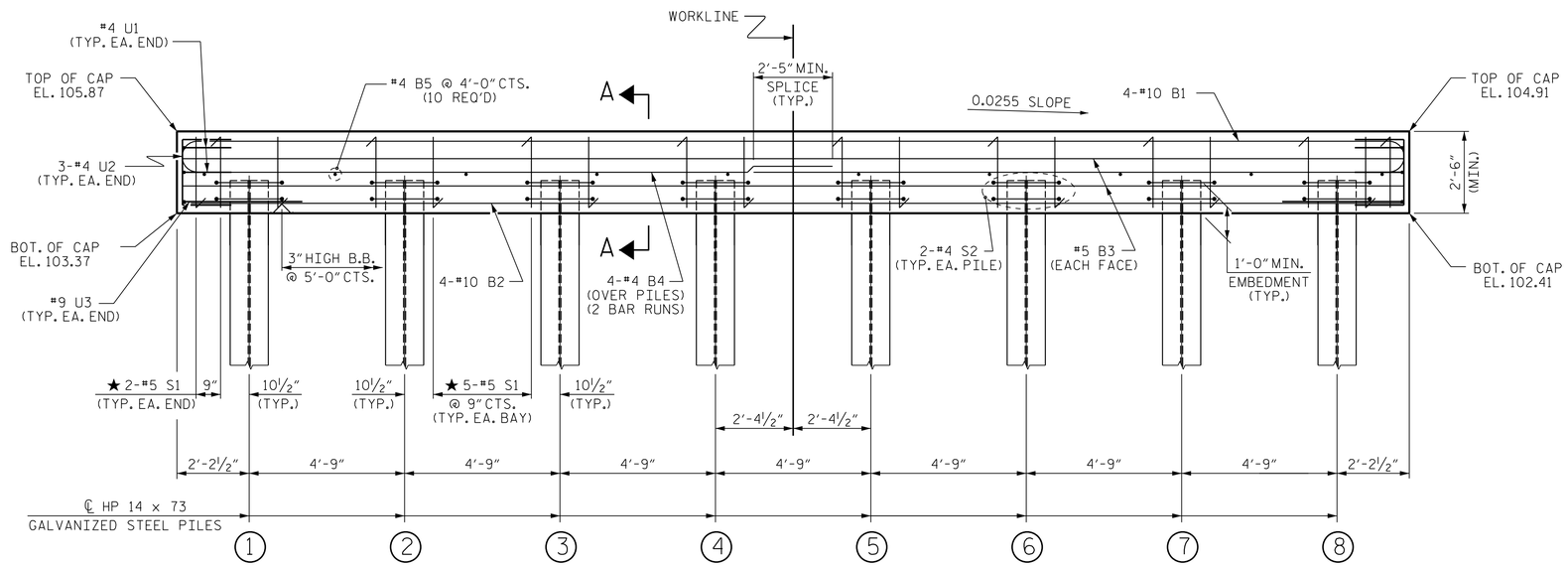

ELEVATION

FOR SECTION A-A, SEE SHEET 2 OF 2

TOP OF PILE ELEVATIONS	
1	104.30
2	104.18
3	104.06
4	103.94
5	103.82
6	103.70
7	103.57
8	103.45

PROJECT NO. 17BP.3.R.60
DUPLIN COUNTY
STATION: 21+03.00 -L-

SHEET 1 OF 2

STATE OF NORTH CAROLINA
DEPARTMENT OF TRANSPORTATION
RALEIGH

SUPERSTRUCTURE

BENT 1

DOCUMENT NOT CONSIDERED FINAL UNLESS ALL SIGNATURES COMPLETED

CDM Smith
CDM SMITH
5400 Glenwood Avenue, Suite 400
Raleigh, NC 27612-3228
NC COA No. F-1255

DRAWN BY : VDK DATE : 03/18
CHECKED BY : THF DATE : 03/18
DESIGN ENGINEER : VDK DATE : 03/18

DWG. No.

NORTH CAROLINA PROFESSIONAL SEAL 016301 ENGINEER TING H. FANG
5/7/2018 10:48:34 AM

REVISIONS						SHEET NO.
NO.	BY:	DATE:	NO.	BY:	DATE:	S-16
1			3			TOTAL SHEETS
2			4			19

FILE: c:\pw_pll\longth\d0926010\401_031_17BP3R60_SAU_B1_016_300219.dgn
DATE: 4/3/2018 12:17:24 AM

DocuSign Envelope ID: 749495CC-F237-4B85-8F86-D7A87F630488

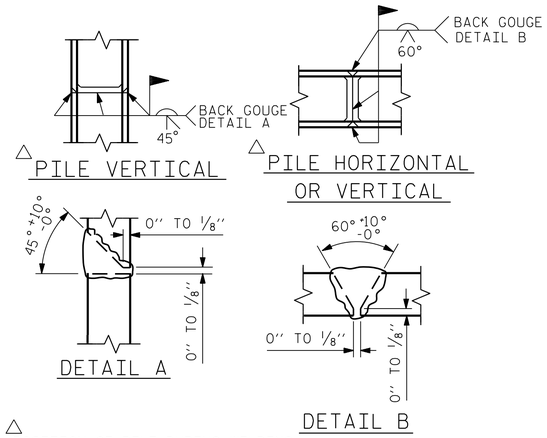

POSITION OF PILE DURING WELDING.

PILE SPLICE DETAILS

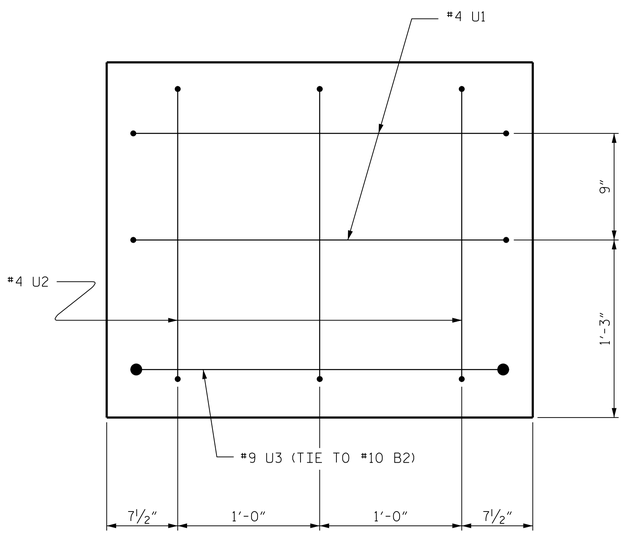

END OF CAP VIEW

(TYPICAL BOTH ENDS)

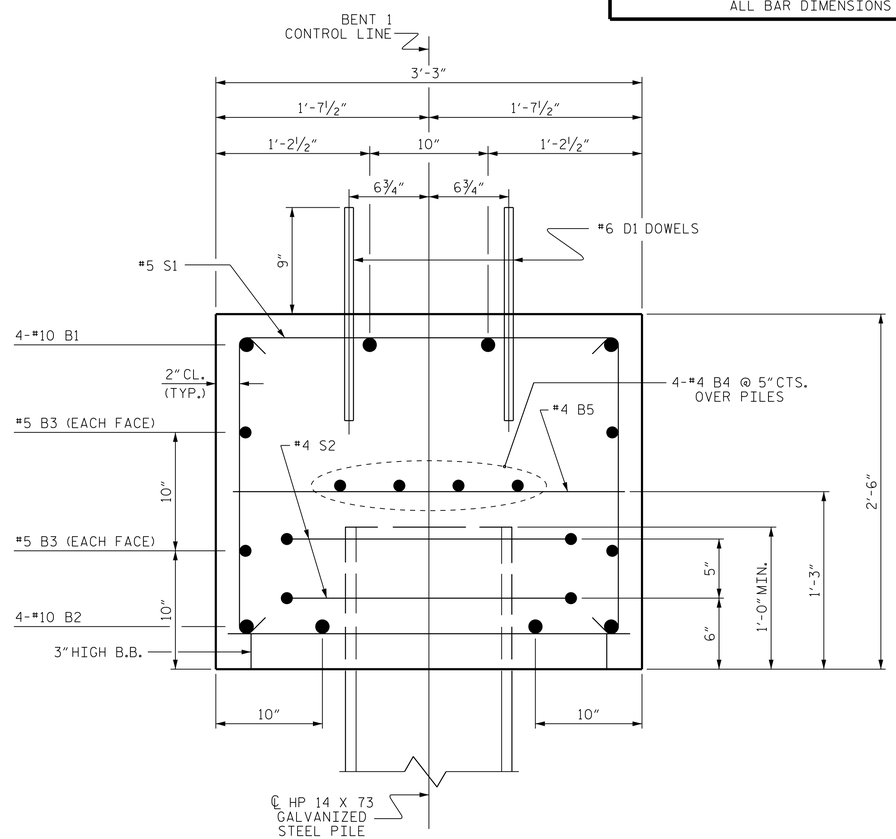

SECTION A-A

BAR TYPES

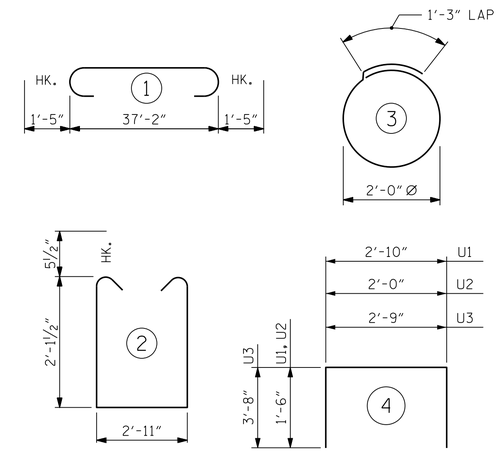

ALL BAR DIMENSIONS ARE OUT TO OUT.

BILL OF MATERIAL

BENT 1

BAR	NO.	SIZE	TYPE	LENGTH	WEIGHT
B1	4	#10	1	40'-0"	688
B2	4	#10	STR	37'-4"	643
B3	4	#5	STR	37'-4"	156
B4	8	#4	STR	19'-11"	106
B5	10	#4	STR	2'-11"	19
D1	44	#6	STR	1'-6"	99
S1	39	#5	2	8'-1"	329
S2	16	#4	3	7'-7"	81
U1	4	#4	4	5'-10"	16
U2		#4	4	5'-0"	
U3	2	#9	4	10'-1"	69
REINFORCING STEEL					2226 LBS

TOTAL CLASS A CONCRETE 11.3 C.Y.

HP 14 X 73 GALVANIZED STEEL PILES
No. 8 LIN. FT. 560
PILE DRIVING EQUIPMENT SETUP EA. 8
PILE REDRIVES EA. 4

PROJECT NO. 17BP.3.R.60
DUPLIN COUNTY
STATION: 21+03.00 -L-

SHEET 2 OF 2

STATE OF NORTH CAROLINA
DEPARTMENT OF TRANSPORTATION
RALEIGH

SUBSTRUCTURE

BENT 1

DOCUMENT NOT CONSIDERED FINAL UNLESS ALL SIGNATURES COMPLETED

CDM Smith
CDM SMITH
5400 Glenwood Avenue, Suite 400
Raleigh, NC 27612-3228
NC COA No. F-1255

DRAWN BY : VDK DATE : 03/18
CHECKED BY : THF DATE : 03/18
DESIGN ENGINEER : VDK DATE : 03/18

DWG. No.

NORTH CAROLINA PROFESSIONAL SEAL 016301 ENGINEER TING H. FANG
5/7/2018 10:48:34 AM

REVISIONS						SHEET NO.
NO.	BY:	DATE:	NO.	BY:	DATE:	S-17
1			3			TOTAL SHEETS
2			4			19

FILE: c:\pw_pll\angth\d0926010\401_033_17BP3R60_SMU_B2_017_300219.dgn
DATE: 4/3/2018 12:17:31 AM

STD. NO. 14" HP_BT_33_75&105S_<60'

DocuSign Envelope ID: 749495CC-F237-4B85-8F86-D7A87F630488

ESTIMATED QUANTITIES		
BRIDGE @ STA. 21+03.00 -L-	RIP RAP CLASS II	GEOTEXTILE FOR DRAINAGE
	TONS	SQUARE YARDS
END BENT 1	100	110
END BENT 2	140	155
TOTAL	240	265

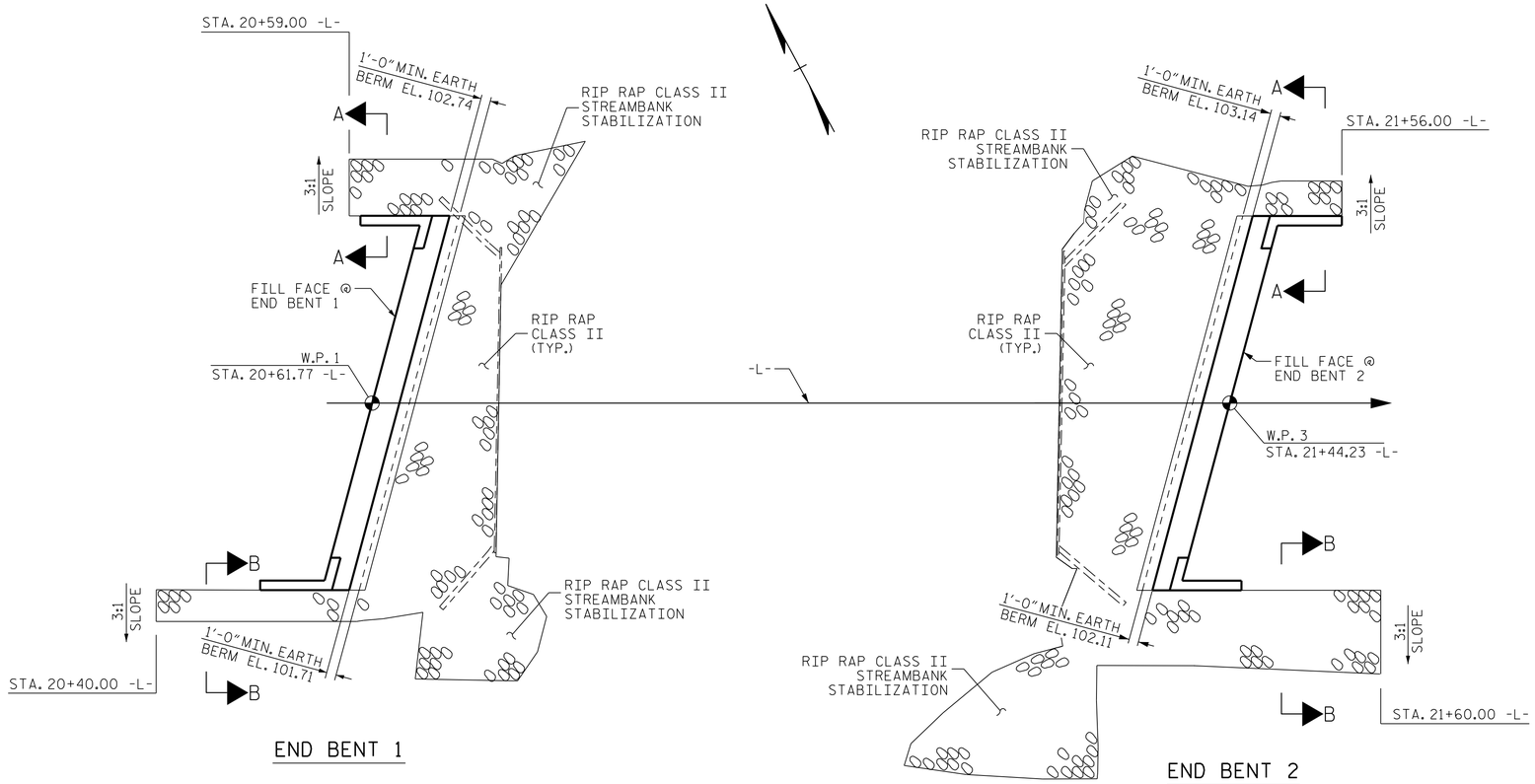

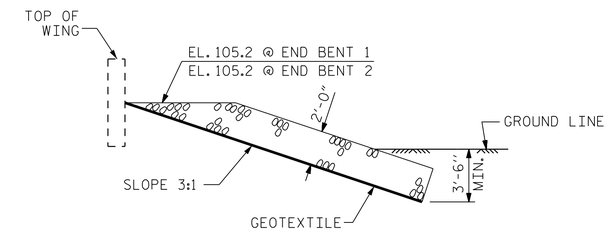

SECTION A-A

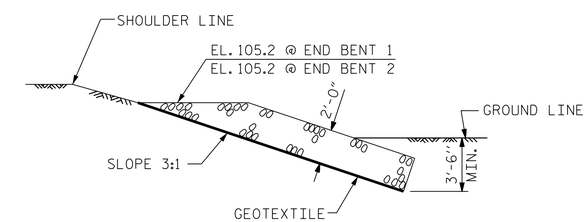

SECTION B-B

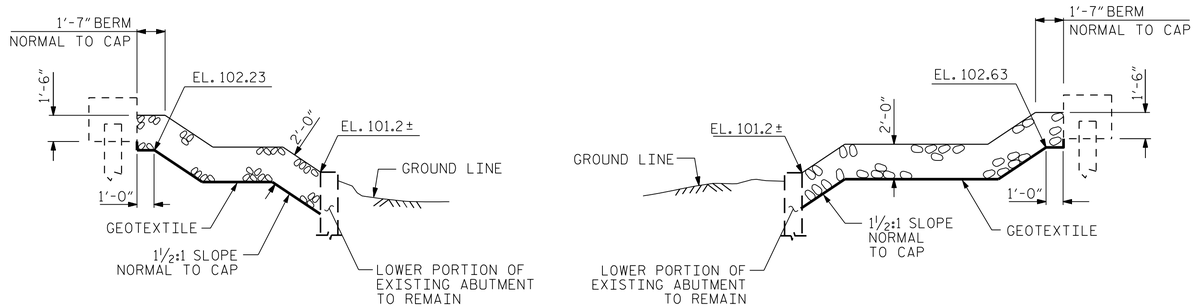

BERM RIP RAPPED

PROJECT NO. 17BP.3.R.60
DUPLIN COUNTY
STATION: 21+03.00 -L-

STATE OF NORTH CAROLINA
DEPARTMENT OF TRANSPORTATION
RALEIGH

STANDARD

RIP RAP DETAILS

DOCUMENT NOT CONSIDERED FINAL UNLESS ALL SIGNATURES COMPLETED

CDM Smith
CDM SMITH
5400 Glenwood Avenue, Suite 400
Raleigh, NC 27612-3228
NC COA No. F-1255

DRAWN BY : VDK DATE : 03/18
CHECKED BY : THF DATE : 03/18
DESIGN ENGINEER : VDK DATE : 03/18

DWG. No.

NORTH CAROLINA PROFESSIONAL SEAL 016301 ENGINEER TING H. FANG
5/7/2018 10:48:34 AM

REVISIONS								SHEET NO.
NO.	BY:	DATE:	NO.	BY:	DATE:			S-18
1			3					TOTAL SHEETS
2			4					19

FILE: c:\pw_pll\length\d0926010\401_035_17BP3R60_SMU_RR_018_300219.dgn
DATE: 4/3/2018 12:17:39 AM

DocuSign Envelope ID: 749495CC-F237-4B85-8F86-D7A87F630488

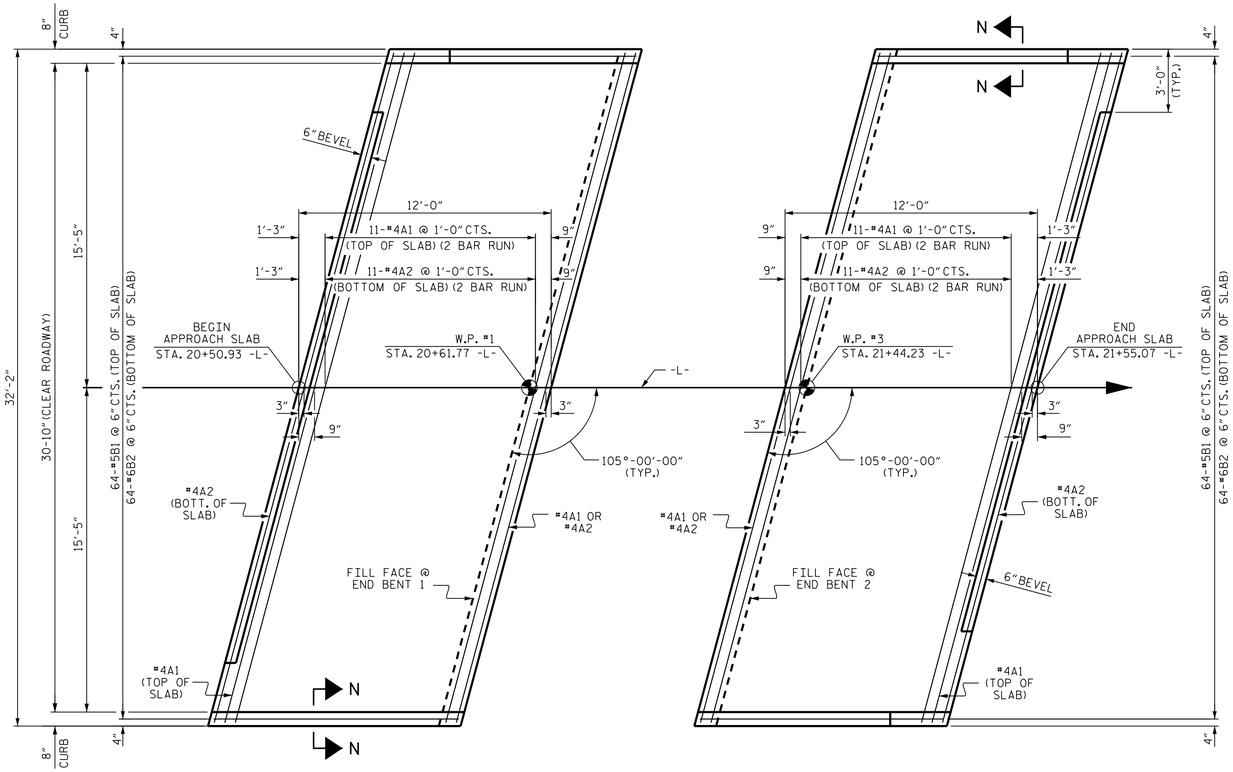

AT END BENT 1

AT END BENT 2

PLAN

DIMENSIONS SHOWN ARE TYPICAL FOR BOTH APPROACH SLABS

NOTES

FOR BRIDGE APPROACH FILL INCLUDING GEOTEXTILE, 4" Ø DRAINAGE PIPE, AND SELECT MATERIAL BACKFILL, SEE ROADWAY PLANS.

GEOTEXTILE SHALL BE TYPE 1 IN ACCORDANCE WITH THE STANDARD SPECIFICATIONS SECTION 1056.

SELECT MATERIAL BACKFILL (CLASS V OR CLASS VI) SHALL BE IN ACCORDANCE WITH STANDARD SPECIFICATIONS SECTION 1016.

SELECT MATERIAL BACKFILL IS TO BE CONTINUOUS ALONG FILL FACE OF BACKWALL FROM OUTSIDE EDGE TO OUTSIDE EDGE OF APPROACH SLAB.

FOR THE 4" Ø DRAINAGE PIPE OUTLET(S), SEE ROADWAY STANDARD DRAWINGS.

AREA BETWEEN THE WINGWALL AND APPROACH SLAB SHALL BE GRADED TO DRAIN THE WATER AWAY FROM THE FILL FACE OF THE BRIDGE AND SHALL BE PAVED. SEE ROADWAY PLANS.

APPROACH SLAB GROOVING IS NOT REQUIRED.

BILL OF MATERIAL

APPROACH SLAB AT EB 1

BAR	NO.	SIZE	TYPE	LENGTH	WEIGHT
* A1	26	#4	STR	17'-6"	304
A2	26	#4	STR	17'-5"	302
* B1	64	#5	STR	11'-1"	740
B2	64	#6	STR	11'-7"	1113
REINFORCING STEEL				LBS.	1415
* EPOXY COATED REINFORCING STEEL				LBS.	1044
CLASS AA CONCRETE				C. Y.	18.4

APPROACH SLAB AT EB 2

BAR	NO.	SIZE	TYPE	LENGTH	WEIGHT
* A1	26	#4	STR	17'-6"	304
A2	26	#4	STR	17'-5"	302
* B1	64	#5	STR	11'-1"	740
B2	64	#6	STR	11'-7"	1113
REINFORCING STEEL				LBS.	1415
* EPOXY COATED REINFORCING STEEL				LBS.	1044
CLASS AA CONCRETE				C. Y.	18.4

SPLICE LENGTHS

BAR SIZE	EPOXY COATED	UNCOATED
#4	2'-0"	1'-9"
#5	2'-6"	2'-2"
#6	3'-10"	2'-7"

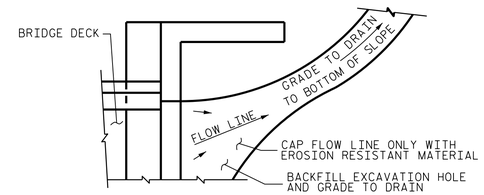

NOTE: IF THE APPROACH SLAB IS NOT CONSTRUCTED IMMEDIATELY AFTER THE BACKFILLING OF THE END BENT EXCAVATION, GRADE TO DRAIN TO THE BOTTOM OF THE SLOPE AND PROVIDE EROSION RESISTANT MATERIAL, SUCH AS FIBERGLASS ROVING OR AS DIRECTED BY THE ENGINEER TO PREVENT SOIL EROSION AND TO PROTECT THE AREA ADJACENT TO THE STRUCTURE. THE CONTRACTOR WILL BE REQUIRED TO REMOVE THESE MATERIALS PRIOR TO CONSTRUCTION OF THE APPROACH SLAB.

TEMPORARY DRAINAGE DETAIL

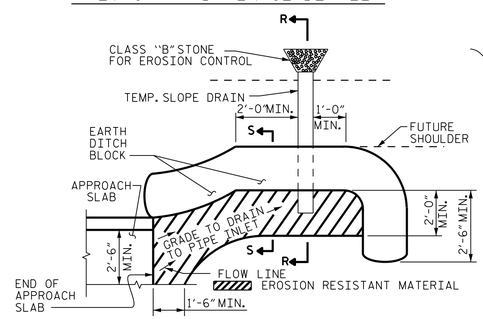

NOTE: IMMEDIATELY AFTER THE CONSTRUCTION OF THE APPROACH SLAB, THE CONTRACTOR SHALL PROVIDE TEMPORARY BERM AND SLOPE DRAIN. CONTRACTOR SHALL GRADE TO PIPE INLET AND PROVIDE EROSION RESISTANT MATERIAL AS SHOWN. THE EROSION RESISTANT MATERIAL SHALL BE EITHER 1) ASPHALT PLANT MIX, TYPE 1 OR TYPE 2, MIN. 2" DEPTH, 2) EROSION CONTROL MAT, OR 3) CONCRETE, AS DIRECTED BY THE ENGINEER. THE SLOPE DRAIN SHALL CONSIST OF A NON-PERFORATED TEMPORARY DRAINAGE PIPE, 12 INCHES IN DIAMETER.

PLAN VIEW

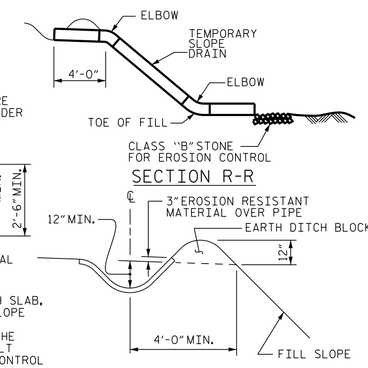

SECTION S-S

TEMPORARY BERM AND SLOPE DRAIN DETAILS

(TO BE USED WHEN SHOULDER BERM GUTTER IS REQUIRED)

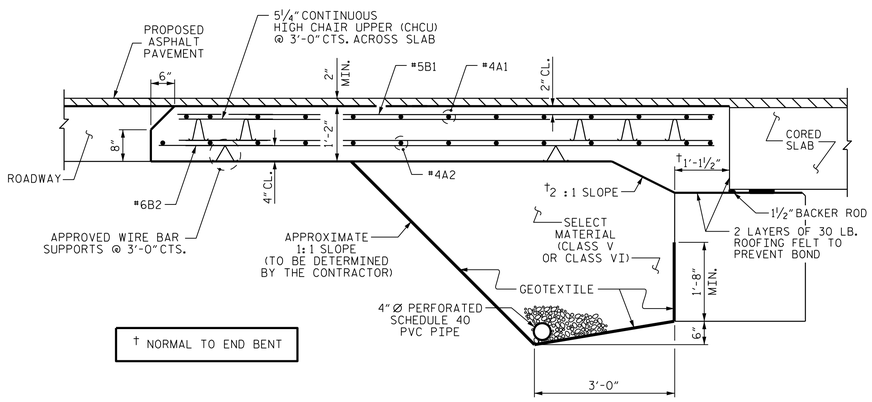

† NORMAL TO END BENT

SECTION THRU SLAB

(TYPE II - MODIFIED APPROACH FILL)

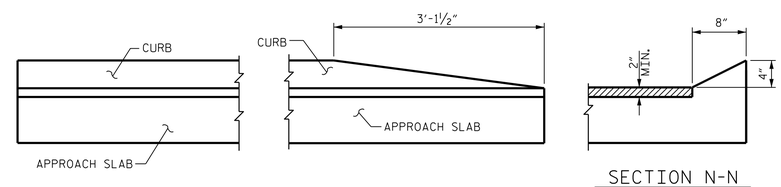

END OF CURB WITH SHOULDER BERM GUTTER

AT RIGHT SIDE OF END BENT 1 ONLY

END OF CURB WITHOUT SHOULDER BERM GUTTER

SECTION N-N

CURB DETAILS

PROJECT NO. 17BP.3.R.60

DUPLIN COUNTY

STATION: 21+03.00 -L-

DOCUMENT NOT CONSIDERED FINAL UNLESS ALL SIGNATURES COMPLETED

CDM Smith

CDM SMITH
5400 Glenwood Avenue, Suite 400
Raleigh, NC 27612-3228
NC COA No. F-1255

DRAWN BY :	VDK	DATE :	03/18
CHECKED BY :	THF	DATE :	03/18
DESIGN ENGINEER :	VDK	DATE :	03/18

DWG. No.

NORTH CAROLINA PROFESSIONAL SEAL 016301 ENGINEER TING H. FANG

5/7/2018 10:48:34 AM

STATE OF NORTH CAROLINA
DEPARTMENT OF TRANSPORTATION
RALEIGH

STANDARD
BRIDGE APPROACH SLAB
FOR PRESTRESSED CONCRETE
CORED SLAB UNIT
(SUB-REGIONAL TIER)
105° SKEW

REVISIONS							SHEET NO.
NO.	BY:	DATE:	NO.	BY:	DATE:		S-19
1			3				TOTAL SHEETS
2			4				19

STD. NO. BAS_33_105S

FILE: c:\pw_pll\tingh\d0926010\d01_037_17BP3R60_SMU_AS_019_300219.dgn
DATE: 4/3/2018 12:17:46 AM

STANDARD NOTES

DESIGN DATA:

SPECIFICATIONS	A.A.S.H.T.O. (CURRENT)
LIVE LOAD	SEE PLANS
IMPACT ALLOWANCE	SEE A.A.S.H.T.O.
STRESS IN EXTREME FIBER OF	
STRUCTURAL STEEL - AASHTO M270 GRADE 36	20,000 LBS. PER SQ. IN.
- AASHTO M270 GRADE 50W	27,000 LBS. PER SQ. IN.
- AASHTO M270 GRADE 50	27,000 LBS. PER SQ. IN.
REINFORCING STEEL IN TENSION	
GRADE 60	24,000 LBS. PER SQ. IN.
CONCRETE IN COMPRESSION	1,200 LBS. PER SQ. IN.
CONCRETE IN SHEAR	SEE A.A.S.H.T.O.
STRUCTURAL TIMBER - TREATED OR	
UNTREATED - EXTREME FIBER STRESS	1,800 LBS. PER SQ. IN.
COMPRESSION PERPENDICULAR TO GRAIN OF TIMBER	375 LBS. PER SQ. IN.
EQUIVALENT FLUID PRESSURE OF EARTH	30 LBS. PER CU. FT. (MINIMUM)

MATERIAL AND WORKMANSHIP:

EXCEPT AS MAY OTHERWISE BE SPECIFIED ON PLANS OR IN THE SPECIAL PROVISIONS, ALL MATERIAL AND WORKMANSHIP SHALL BE IN ACCORDANCE WITH THE 2018 "STANDARD SPECIFICATIONS FOR ROADS AND STRUCTURES" OF THE N. C. DEPARTMENT OF TRANSPORTATION.

STEEL SHEET PILING FOR PERMANENT OR TEMPORARY APPLICATIONS SHALL BE HOT ROLLED.

CONCRETE:

UNLESS OTHERWISE REQUIRED ON PLANS, CLASS A CONCRETE SHALL BE USED FOR ALL PORTIONS OF ALL STRUCTURES WITH THE EXCEPTION THAT: CLASS AA CONCRETE SHALL BE USED IN BRIDGE SUPERSTRUCTURES, ABUTMENT BACKWALLS, AND APPROACH SLABS; AND CLASS B CONCRETE SHALL BE USED FOR SLOPE PROTECTION AND RIP RAP.

CONCRETE CHAMFERS:

UNLESS OTHERWISE NOTED ON THE PLANS, ALL EXPOSED CORNERS ON STRUCTURES SHALL BE CHAMFERED 3/4" WITH THE FOLLOWING EXCEPTIONS: TOP CORNERS OF CURBS MAY BE ROUNDED TO 1-1/2" RADIUS WHICH IS BUILT INTO CURB FORMS; CORNERS OF TRANSVERSE FLOOR EXPANSION JOINTS SHALL BE ROUNDED WITH A 1/4" FINISHING TOOL UNLESS OTHERWISE REQUIRED ON PLANS; AND CORNERS OF EXPANSION JOINTS IN THE ROADWAY FACES AND TOPS OF CURBS AND SIDEWALKS SHALL BE ROUNDED TO A 1/4" RADIUS WITH A FINISHING STONE OR TOOL UNLESS OTHERWISE REQUIRED ON PLANS.

DOWELS:

DOWELS WHEN INDICATED ON PLANS AS FOR CULVERT EXTENSIONS, SHALL BE EMBEDDED AT LEAST 12" INTO THE OLD CONCRETE AND GROUTED INTO PLACE WITH 1:2 CEMENT MORTAR.

ALLOWANCE FOR DEAD LOAD DEFLECTION, SETTLEMENT, ETC. IN CASTING SUPERSTRUCTURES:

BRIDGES SHALL BE BUILT ON THE GRADE OR VERTICAL CURVE SHOWN ON PLANS. SLABS, CURBS AND PARAPETS SHALL CONFORM TO THE GRADE OR CURVE.

ALL DIMENSIONS WHICH ARE GIVEN IN SECTION AND ARE AFFECTED BY DEAD LOAD DEFLECTIONS ARE DIMENSIONS AT CENTER LINE OF BEARING UNLESS OTHERWISE NOTED ON PLANS. IN SETTING FORMS FOR STEEL BEAM BRIDGES AND PRESTRESSED CONCRETE GIRDER BRIDGES, ADJUSTMENTS SHALL BE MADE DUE TO THE DEAD LOAD DEFLECTIONS FOR THE ELEVATIONS SHOWN. WHERE BLOCKS ARE SHOWN OVER BEAMS FOR BUILDING UP TO THE SLAB, THE VERTICAL DIMENSIONS OF THE BLOCKS SHALL BE ADJUSTED BETWEEN BEARINGS TO COMPENSATE FOR DEAD LOAD DEFLECTIONS, VERTICAL CURVE ORDINATE, AND ACTUAL BEAM CAMBER. WHERE BOTTOM OF SLAB IS IN LINE WITH BOTTOM OF TOP FLANGES, DEPTH OF SLAB BETWEEN BEARINGS SHALL BE ADJUSTED TO COMPENSATE FOR DEAD LOAD DEFLECTION, VERTICAL CURVE ORDINATE, AND ACTUAL BEAM CAMBER.

IN SETTING FALSEWORK AND FORMS FOR REINFORCED CONCRETE SPANS, AN ALLOWANCE SHALL BE MADE FOR DEAD LOAD DEFLECTIONS, SETTLEMENT OF FALSEWORK, AND PERMANENT CAMBER WHICH SHALL BE PROVIDED FOR IN ADDITION TO THE ELEVATIONS SHOWN. AFTER REMOVAL OF THE FALSEWORK, THE FINISHED STRUCTURES SHALL CONFORM TO THE PROFILE AND ELEVATIONS SHOWN ON THE PLANS AND CONSTRUCTION ELEVATIONS FURNISHED BY THE ENGINEER.

DETAILED DRAWINGS FOR FALSEWORK OR FORMS FOR BRIDGE SUPERSTRUCTURE AND ANY STRUCTURE OR PARTS OF A STRUCTURE AS NOTED ON THE PLANS SHALL BE SUBMITTED TO THE ENGINEER FOR APPROVAL BEFORE CONSTRUCTION OF THE FALSEWORK OR FORMS IS STARTED.

REINFORCING STEEL:

ALL REINFORCING STEEL SHALL BE DEFORMED. DIMENSIONS RELATIVE TO PLACEMENT OF REINFORCING ARE TO CENTERS OF BARS UNLESS OTHERWISE INDICATED IN THE PLANS. DIMENSIONS ON BAR DETAILS ARE TO CENTERS OF BARS OR ARE OUT TO OUT AS INDICATED ON PLANS.

WIRE BAR SUPPORTS SHALL BE PROVIDED FOR REINFORCING STEEL WHERE INDICATED ON THE PLANS. WHEN BAR SUPPORT PIECES ARE PLACED IN CONTINUOUS LINES, THEY SHALL BE SO PLACED THAT THE ENDS OF THE SUPPORTING WIRES SHALL BE LAPPED TO LOCK LEGS ON ADJOINING PIECES.

STRUCTURAL STEEL:

AT THE CONTRACTOR'S OPTION, HE MAY SUBSTITUTE 7/8" Ø SHEAR STUDS FOR THE 3/4" Ø STUDS SPECIFIED ON THE PLANS. THIS SUBSTITUTION SHALL BE MADE AT THE RATE OF 3 - 7/8" Ø STUDS FOR 4 - 3/4" Ø STUDS, AND STUD SPACING CHANGES SHALL BE MADE AS NECESSARY TO PROVIDE THE SAME EQUIVALENT NUMBER OF 7/8" Ø STUDS ALONG THE BEAM AS SHOWN FOR 3/4" Ø STUDS BASED ON THE RATIO OF 3 - 7/8" Ø STUDS FOR 4 - 3/4" Ø STUDS. STUDS OF THE LENGTH SPECIFIED ON THE PLANS MUST BE PROVIDED. THE MAXIMUM SPACING SHALL BE 2'-0".

EXCEPT AT THE INTERIOR SUPPORTS OF CONTINUOUS BEAMS WHERE THE COVER PLATE IS IN CONTACT WITH BEARING PLATE, THE CONTRACTOR MAY, AT HIS OPTION, SUBSTITUTE FOR THE COVER PLATES DESIGNATED ON THE PLANS COVER PLATES OF THE EQUIVALENT AREA PROVIDED THESE PLATES ARE AT LEAST 5/16" IN THICKNESS AND DO NOT EXCEED A WIDTH EQUAL TO THE FLANGE WIDTH LESS 2" OR A THICKNESS EQUAL TO 2 TIMES THE FLANGE THICKNESS. THE SIZE OF FILLET WELDS SHALL CONFORM TO THE REQUIREMENTS OF THE CURRENT ANSI/AASHTO/AWS "BRIDGE WELDING CODE". ELECTROSLAG WELDING WILL NOT BE PERMITTED.

WITH THE SOLE EXCEPTION OF EDGES AT SURFACES WHICH BEAR ON OTHER SURFACES, ALL SHARP EDGES AND ENDS OF SHAPES AND PLATES SHALL BE SLIGHTLY ROUNDED BY SUITABLE MEANS TO A RADIUS OF APPROXIMATELY 1/16 INCH OR EQUIVALENT FLAT SURFACE AT A SUITABLE ANGLE PRIOR TO PAINTING, GALVANIZING, OR METALLIZING.

HANDRAILS AND POSTS:

METAL STANDARDS AND FACES OF THE CONCRETE END POSTS FOR THE METAL RAIL SHALL BE SET NORMAL TO THE GRADE OF THE CURB, UNLESS OTHERWISE SHOWN ON PLANS. THE METAL RAIL AND TOPS OF CONCRETE POSTS USED WITH THE ALUMINUM RAIL SHALL BE BUILT PARALLEL TO THE GRADE OF THE CURB.

METAL HANDRAILS SHALL BE IN ACCORDANCE WITH THE PLANS. RAILS SHALL BE AS MANUFACTURED FOR BRIDGE RAILING. CASTINGS SHALL BE OF A UNIFORM APPEARANCE. FINS AND OTHER DEFORMATIONS RESULTING FROM CASTING OR OTHERWISE SHALL BE REMOVED IN A MANNER SO THAT A UNIFORM COLORING OF THE COMPLETED CASTING SHALL BE OBTAINED. CASTINGS WITH DISCOLORATIONS OR OF NON-UNIFORM COLORING WILL NOT BE ACCEPTED. CERTIFIED MILL REPORTS ARE REQUIRED FOR METAL RAILS AND POSTS.

SPECIAL NOTES:

GENERALLY, IN CASE OF DISCREPANCY, THIS STANDARD SHEET OF NOTES SHALL GOVERN OVER THE SPECIFICATIONS, BUT THE REMAINDER OF THE PLANS SHALL GOVERN OVER NOTES HEREON, AND SPECIAL PROVISIONS SHALL GOVERN OVER ALL. SEE SPECIFICATIONS ARTICLE 105-4.

ENGLISH

JANUARY, 1990