DocuSign Envelope ID: 004647F6-4238-403D-857B-E721696D8D72

09/08/99

PROJECT: 17BP.3.R.80

CONTRACT: DC00314

See Sheet 1A For Index of Sheets
See Sheet 1B For Conventional Symbols

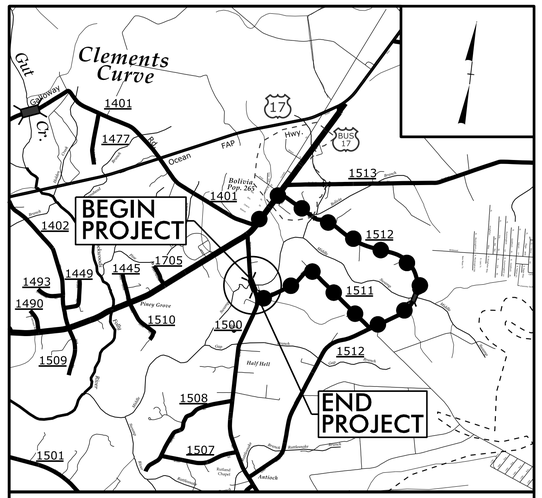

VICINITY MAP

DETOUR ROUTE

N.T.S.

STATE OF NORTH CAROLINA
DIVISION OF HIGHWAYS

BRUNSWICK COUNTY

STATE	STATE PROJECT REFERENCE NO.	SHEET NO.	TOTAL SHEETS
N.C.	17BP.3.R.80 (FORMERLY B-5311)	1	

STATE PROJ. NO.	F.A. PROJ. NO.	DESCRIPTION
17BP.3.PE.80	N/A	P.E.
17BP.3.ROW.80	N/A	ROW/UTIL.
17BP.3.R.80	N/A	CONST.

LOCATION: REPLACE BRIDGE 104 OVER MIDDLE SWAMP ON NC 906 (MIDWAY ROAD SE)

TYPE OF WORK: GRADING, DRAINAGE, PAVING AND STRUCTURE

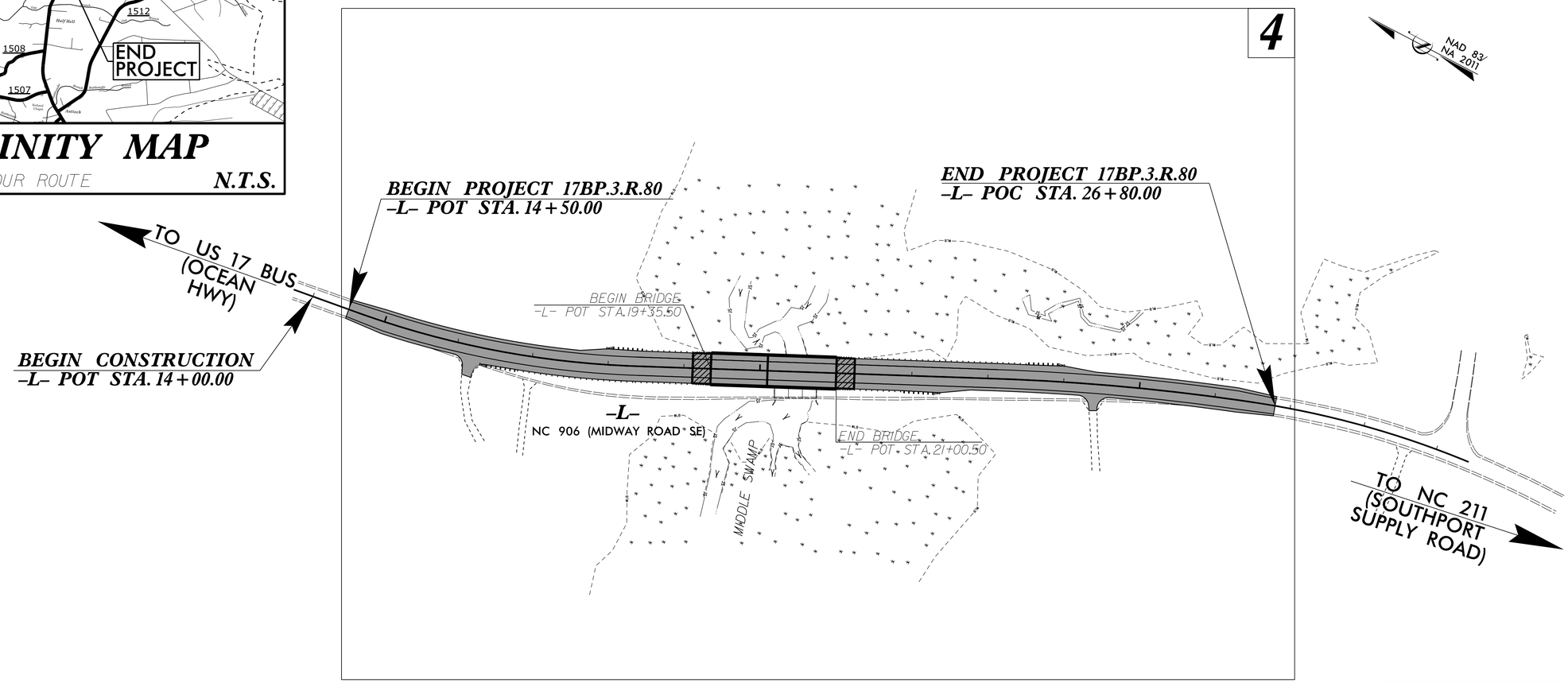

DOCUMENT NOT CONSIDERED FINAL UNLESS ALL SIGNATURES COMPLETED

GRAPHIC SCALES

50 25 0 50 100
PLANS

50 25 0 50 100
PROFILE (HORIZONTAL)

5 2.5 0 5 10
PROFILE (VERTICAL)

DESIGN DATA

ADT 2022 = 6128 VPD
ADT 2040 = 9800 VPD
K = 9%
D = 55%
T = 5%
V = 60 MPH
TTST = 1% DUALS = 4%
FUNC CLASS =
MAJOR COLLECTOR
REGIONAL TIER

PROJECT LENGTH

LENGTH ROADWAY PROJECT 17BP.3.R.80	=	0.202 MILES
LENGTH BRIDGE PROJECT 17BP.3.R.80	=	0.031 MILES
TOTAL LENGTH PROJECT 17BP.3.R.80	=	0.233 MILES

Prepared in the Office of:
CDM Smith
CDM Smith Inc.
5400 Glenwood Avenue
Suite 400
Raleigh, NC 27612-3228
NC COA No. F-1255
FOR THE NORTH CAROLINA DEPARTMENT OF TRANSPORTATION

2018 STANDARD SPECIFICATIONS

RIGHT OF WAY DATE:
NOVEMBER 26, 2021

LETTING DATE:
JULY 21, 2022

DAVID Z. KEISER, PE
PROJECT ENGINEER

ADAM M. CONRAD, PE
PROJECT DESIGN ENGINEER

DEREK PIELECH, PE
NCDOT CONTACT

HYDRAULICS ENGINEER
DocuSigned by: Patrick Hartnett
DFCFF9CCB29846D...
SIGNATURE:
P.E.
NORTH CAROLINA 6/1/2022 SEAL 053755 ENGINEER PATRICK HARTNETT

ROADWAY DESIGN ENGINEER
DocuSigned by: David Z. Keiser
E6FA5B098ED34EC...
SIGNATURE:
P.E.
NORTH CAROLINA 6/1/2022 SEAL 033400 ENGINEER DAVID Z. KEISER

STATE OF NORTH CAROLINA DEPARTMENT OF TRANSPORTATION

-SYSTIME-
...\Roadway\Proj\B531L_Rdy_tsh.dgn
USER: CONRADAM

DocuSign Envelope ID: 503CED09-B67E-4290-8894-3690DFF75E26

8/17/99

PROJECT REFERENCE NO.	SHEET NO.
17BP.3.R.80	1A

DOCUMENT NOT CONSIDERED FINAL UNLESS ALL SIGNATURES COMPLETED

ROADWAY DESIGN ENGINEER

NORTH CAROLINA PROFESSIONAL SEAL 033400 ENGINEER DAVID Z. KEISER
4/14/2022
DocuSigned by: David Z. Keiser
4/14/2022 | 1:48 PM EDT

CDM Smith
CDM Smith Inc.
5400 Glenwood Avenue
Suite 400
Raleigh, NC 27612-3228
NC COA No. F-1255

INDEX OF SHEETS

SHEET NUMBER	SHEET
1	TITLE SHEET
1A	INDEX OF SHEETS, GENERAL NOTES AND STANDARD DRAWINGS
1B	CONVENTIONAL SYMBOLS
2A-1 THRU 2A-2	PAVEMENT SCHEDULE AND TYPICAL SECTIONS
2C-1	ROADWAY DETAILS
2G-1 THRU 2G-2	GEOTEXTILE DETAILS
3B-1	ROADWAY SUMMARY
3D-1	DRAINAGE SUMMARY
3G-1	GEOTECHNICAL SUMMARY
4	PLAN AND PROFILE SHEET
RW01 THRU RW04-REV	RIGHT OF WAY PLANS
TMP-1 THRU TMP-2	TRANSPORTATION MANAGEMENT PLANS
PMP-1 THRU PMP-2	PAVEMENT MARKING PLANS
EC-1 THRU EC-5	EROSION CONTROL PLANS
UO-1 THRU UO-2	UTILITIES BY OTHERS PLANS
UC-1 THRU UC-4	UTILITY CONSTRUCTION PLANS
X-1 THRU X-9	CROSS-SECTION SHEET INDEX AND CROSS-SECTIONS
S-1 THRU S-26	STRUCTURE PLANS

EFF. 01-16-2018
REV.

2018 ROADWAY ENGLISH STANDARD DRAWINGS

The following Roadway Standards as appear in "Roadway Standard Drawings" Highway Design Branch - N. C. Department of Transportation - Raleigh, N. C., Dated January, 2018 are applicable to this project and by reference hereby are considered a part of these plans:

STD.NO.	TITLE
DIVISION 2 - EARTHWORK	
200.03	Method of Clearing - Modified Method III (Use Detail in Lieu of Standard)
225.02	Guide for Grading Subgrade - Secondary and Local
225.04	Method of Obtaining Superelevation - Two Lane Pavement
275.01	Rock Plating (Use Detail in Lieu of Standard)
DIVISION 3 - PIPE CULVERTS	
300.01	Method of Pipe Installation
310.10	Driveway Pipe Construction
DIVISION 4 - MAJOR STRUCTURES	
422.02	Bridge Approach Fills - Type II Modified Approach Fill
DIVISION 5 - SUBGRADE, BASES AND SHOULDERS	
560.01	Method of Shoulder Construction - High Side of Superelevated Curve - Method I
DIVISION 8 - INCIDENTALS	
815.02	Subsurface Drain
840.00	Concrete Base Pad for Drainage Structures
840.27	Brick Grated Drop Inlet Type 'B' - 12" thru 36" Pipe
840.29	Frames and Narrow Slot Flat Grates
846.01	Concrete Curb, Gutter and Curb & Gutter
846.04	Drop Inlet Installation in Shoulder Berm Gutter
862.01	Guardrail Placement
862.02	Guardrail Installation
862.03	Structure Anchor Units
876.02	Guide for Rip Rap at Pipe Outlets

GENERAL NOTES:

2018 SPECIFICATIONS
EFFECTIVE: 01-16-2018
REVISED:

GRADING AND SURFACING OR RESURFACING AND WIDENING:

THE GRADE LINES SHOWN DENOTE THE FINISHED ELEVATION OF THE PROPOSED SURFACING AT GRADE POINTS SHOWN ON THE TYPICAL SECTIONS. WHERE NO GRADE LINES ARE SHOWN, THE PROFILES SHOWN DENOTE THE TOP ELEVATION OF THE EXISTING PAVEMENT ALONG THE CENTER LINE OF SURVEY ON WHICH THE PROPOSED RESURFACING WILL BE PLACED. GRADE LINES MAY BE ADJUSTED BY THE ENGINEER IN ORDER TO SECURE A PROPER TIE-IN.

CLEARING:

CLEARING ON THIS PROJECT SHALL BE PERFORMED TO THE LIMITS ESTABLISHED BY MODIFIED METHOD III.

SUPERELEVATION:

ALL CURVES ON THIS PROJECT SHALL BE SUPERELEVATED IN ACCORDANCE WITH STD. NO. 225.04 USING THE RATE OF SUPERELEVATION AND RUNOFF SHOWN ON THE PLANS. SUPERELEVATION IS TO BE REVOLVED ABOUT THE GRADE POINTS SHOWN ON THE TYPICAL SECTIONS.

SHOULDER CONSTRUCTION:

ASPHALT, EARTH, AND CONCRETE SHOULDER CONSTRUCTION ON THE HIGH SIDE OF SUPERELEVATED CURVES SHALL BE IN ACCORDANCE WITH STD. NO. 560.01

SUBSURFACE DRAINS:

SUBSURFACE DRAINS SHALL BE CONSTRUCTED IN ACCORDANCE WITH STD. NO. 815.02 AT LOCATIONS DIRECTED BY THE ENGINEER.

GUARDRAIL:

THE GUARDRAIL LOCATIONS SHOWN ON THE PLANS MAY BE ADJUSTED DURING CONSTRUCTION AS DIRECTED BY THE ENGINEER. THE CONTRACTOR SHOULD CONSULT WITH THE ENGINEER PRIOR TO ORDERING GUARDRAIL MATERIAL.

END BENTS:

THE ENGINEER SHALL CHECK THE STRUCTURE END BENT PLANS, DETAILS, AND CROSS-SECTION PRIOR TO SETTING OF THE SLOPE STAKES FOR THE EMBANKMENT OR EXCAVATION APPROACHING A BRIDGE.

UTILITIES:

UTILITY OWNERS ON THIS PROJECT ARE

BRUNSWICK ELECTRIC MEMBERSHIP - POWER DISTRIBUTION
BRUNSWICK COUNTY PUBLIC WORKS - WATER DISTRIBUTION
ATLANTIC TELEPHONE - TELECOMMUNICATION

ANY RELOCATION OF EXISTING UTILITIES WILL BE ACCOMPLISHED BY OTHERS, EXCEPT AS SHOWN ON THE PLANS.

RIGHT-OF-WAY MARKERS:

ALL RIGHT-OF-WAY MARKERS ON THIS PROJECT SHALL BE PLACED BY OTHERS.

-SYSTIME-
-SYS-
-INSTF-
-USERNAME-
-DGN-
-DATE-
-T

9/10/2021

PROJECT REFERENCE NO.	SHEET NO.
17BP.3.R.80	1-B

STATE OF NORTH CAROLINA, DIVISION OF HIGHWAYS

CONVENTIONAL PLAN SHEET SYMBOLS

Note: Not to Scale

BOUNDARIES AND PROPERTY:

- State Line
- County Line
- Township Line
- City Line
- Reservation Line
- Property Line
- Existing Iron Pin (EIP) — EIP
- Computed Property Corner
- Existing Concrete Monument (ECM) — ECM
- Parcel/Sequence Number — 123
- Existing Fence Line
- Proposed Woven Wire Fence
- Proposed Chain Link Fence
- Proposed Barbed Wire Fence
- Existing Wetland Boundary — WLB
- Proposed Wetland Boundary — WLB
- Existing Endangered Animal Boundary — EAB
- Existing Endangered Plant Boundary — EPB
- Existing Historic Property Boundary — HPB
- Known Contamination Area: Soil — S
- Potential Contamination Area: Soil — S
- Known Contamination Area: Water — W
- Potential Contamination Area: Water — W
- Contaminated Site: Known or Potential

BUILDINGS AND OTHER CULTURE:

- Gas Pump Vent or U/G Tank Cap
- Sign — S
- Well — W
- Small Mine
- Foundation
- Area Outline
- Cemetery
- Building
- School
- Church
- Dam

HYDROLOGY:

- Stream or Body of Water
- Hydro, Pool or Reservoir
- Jurisdictional Stream — JS
- Buffer Zone 1 — BZ 1
- Buffer Zone 2 — BZ 2
- Flow Arrow
- Disappearing Stream
- Spring
- Wetland
- Proposed Lateral, Tail, Head Ditch — FLOW
- False Sump

RAILROADS:

- Standard Gauge — CSX TRANSPORTATION
- RR Signal Milepost — MILEPOST 35
- Switch — SWITCH
- RR Abandoned
- RR Dismantled

RIGHT OF WAY & PROJECT CONTROL:

- Primary Horiz Control Point
- Primary Horiz and Vert Control Point
- Secondary Horiz and Vert Control Point
- Vertical Benchmark
- Existing Right of Way Monument
- Proposed Right of Way Monument (Rebar and Cap)
- Proposed Right of Way Monument (Concrete)
- Existing Permanent Easement Monument
- Proposed Permanent Easement Monument (Rebar and Cap)
- Existing C/A Monument
- Proposed C/A Monument (Rebar and Cap)
- Proposed C/A Monument (Concrete)
- Existing Right of Way Line
- Proposed Right of Way Line — RW
- Existing Control of Access Line — CA
- Proposed Control of Access Line — CA
- Proposed ROW and CA Line — RW CA
- Existing Easement Line — E
- Proposed Temporary Construction Easement — E
- Proposed Temporary Drainage Easement — TDE
- Proposed Permanent Drainage Easement — PDE
- Proposed Permanent Drainage/Utility Easement — DUE
- Proposed Permanent Utility Easement — PUE
- Proposed Temporary Utility Easement — TUE
- Proposed Aerial Utility Easement — AUE

ROADS AND RELATED FEATURES:

- Existing Edge of Pavement
- Existing Curb
- Proposed Slope Stakes Cut — C
- Proposed Slope Stakes Fill — F
- Proposed Curb Ramp — CR
- Existing Metal Guardrail
- Proposed Guardrail
- Existing Cable Guiderail
- Proposed Cable Guiderail
- Equality Symbol
- Pavement Removal

VEGETATION:

- Single Tree
- Single Shrub
- Hedge
- Woods Line
- Orchard
- Vineyard — Vineyard

EXISTING STRUCTURES:

MAJOR:

- Bridge, Tunnel or Box Culvert — CONC
- Bridge Wing Wall, Head Wall and End Wall — CONC WW

MINOR:

- Head and End Wall — CONC HW
- Pipe Culvert
- Footbridge
- Drainage Box: Catch Basin, DI or JB — CB
- Paved Ditch Gutter
- Storm Sewer Manhole — S
- Storm Sewer — S

UTILITIES:

** SUE – Subsurface Utility Engineering*
LOS – Level of Service – A,B,C or D (Accuracy)

POWER:

- Existing Power Pole
- Proposed Power Pole
- Existing Joint Use Pole
- Proposed Joint Use Pole
- Power Manhole — P
- Power Line Tower
- Power Transformer
- U/G Power Cable Hand Hole — HH
- H-Frame Pole
- U/G Power Line Test Hole (SUE – LOS A)*
- U/G Power Line (SUE – LOS B)* — P
- U/G Power Line (SUE – LOS C)* — P
- U/G Power Line (SUE – LOS D)* — P

TELEPHONE:

- Existing Telephone Pole
- Proposed Telephone Pole
- Telephone Manhole — T
- Telephone Pedestal — T
- Telephone Cell Tower
- U/G Telephone Cable Hand Hole — HH
- U/G Telephone Test Hole (SUE – LOS A)*
- U/G Telephone Cable (SUE – LOS B)* — T
- U/G Telephone Cable (SUE – LOS C)* — T
- U/G Telephone Cable (SUE – LOS D)* — T
- U/G Telephone Conduit (SUE – LOS B)* — TC
- U/G Telephone Conduit (SUE – LOS C)* — TC
- U/G Telephone Conduit (SUE – LOS D)* — TC
- U/G Fiber Optics Cable (SUE – LOS B)* — T FO
- U/G Fiber Optics Cable (SUE – LOS C)* — T FO
- U/G Fiber Optics Cable (SUE – LOS D)* — T FO

WATER:

- Water Manhole — W
- Water Meter
- Water Valve
- Water Hydrant
- U/G Water Line Test Hole (SUE – LOS A)*
- U/G Water Line (SUE – LOS B)* — W
- U/G Water Line (SUE – LOS C)* — W
- U/G Water Line (SUE – LOS D)* — W
- Above Ground Water Line — A/G Water

TV:

- TV Pedestal — C
- TV Tower
- U/G TV Cable Hand Hole — HH
- U/G TV Test Hole (SUE – LOS A)*
- U/G TV Cable (SUE – LOS B)* — TV
- U/G TV Cable (SUE – LOS C)* — TV
- U/G TV Cable (SUE – LOS D)* — TV
- U/G Fiber Optic Cable (SUE – LOS B)* — TV FO
- U/G Fiber Optic Cable (SUE – LOS C)* — TV FO
- U/G Fiber Optic Cable (SUE – LOS D)* — TV FO

GAS:

- Gas Valve
- Gas Meter
- U/G Gas Line Test Hole (SUE – LOS A)*
- U/G Gas Line (SUE – LOS B)* — G
- U/G Gas Line (SUE – LOS C)* — G
- U/G Gas Line (SUE – LOS D)* — G
- Above Ground Gas Line — A/G Gas

SANITARY SEWER:

- Sanitary Sewer Manhole
- Sanitary Sewer Cleanout
- U/G Sanitary Sewer Line — SS
- Above Ground Sanitary Sewer — A/G Sanitary Sewer
- SS Force Main Line Test Hole (SUE – LOS A)*
- SS Force Main Line (SUE – LOS B)* — FSS
- SS Force Main Line (SUE – LOS C)* — FSS
- SS Force Main Line (SUE – LOS D)* — FSS

MISCELLANEOUS:

- Utility Pole
- Utility Pole with Base
- Utility Located Object
- Utility Traffic Signal Box — S
- Utility Unknown U/G Line (SUE – LOS B)* — ?UTL
- U/G Tank; Water, Gas, Oil
- Underground Storage Tank, Approx. Loc. — UST
- A/G Tank; Water, Gas, Oil
- Geoenvironmental Boring
- Abandoned According to Utility Records — AATUR
- End of Information — E.O.I.

DocuSign Envelope ID: 48E0EF11-CBB6-4CF8-B808-71408370F230

PROJECT REFERENCE NO.	SHEET NO.
17BP.3.R.80	2A-1
ROADWAY DESIGN ENGINEER	PAVEMENT DESIGN ENGINEER

NORTH CAROLINA 3/3/2022 SEAL 033400 ENGINEER DAVID REISER

DocuSigned by: DAVID REISER E6FA5B09BE034EC...

CDM Smith
CDM Smith Inc.
5400 Glenwood Avenue
Suite 400
Raleigh, NC 27612-3228
NC COA No. F-1255

DOCUMENT NOT CONSIDERED FINAL UNLESS ALL SIGNATURES COMPLETED

PAVEMENT SCHEDULE

(FINAL PAVEMENT DESIGN)

C1	PROP. APPROX. 3" ASPHALT CONCRETE SURFACE COURSE, TYPE S9.5B, AT AN AVERAGE RATE OF 165 LBS. PER SQ. YD. IN EACH OF TWO LAYERS.
C2	PROP. VAR. DEPTH ASPHALT CONCRETE SURFACE COURSE, TYPE S9.5B, AT AN AVERAGE RATE OF 110 LBS. PER SQ. YD. PER 1" DEPTH. TO BE PLACED IN LAYERS NOT LESS THAN 1" IN DEPTH OR GREATER THAN 1.5" IN DEPTH.
E1	PROP. APPROX. 5.5" ASPHALT CONCRETE BASE COURSE, TYPE B25.0C, AT AN AVERAGE RATE OF 627 LBS. PER SQ. YD.
E2	PROP. VAR. DEPTH ASPHALT CONCRETE BASE COURSE, TYPE B25.0C AT AN AVERAGE RATE OF 114 LBS. PER SQ. YD. PER 1" DEPTH. TO BE PLACED IN LAYERS NOT LESS THAN 3" IN DEPTH OR GREATER THAN 5.5" IN DEPTH.
J1	PROP. 8" AGGREGATE BASE COURSE
R1	SHOULDER BERM GUTTER
T	EARTH MATERIAL.
U	EXISTING PAVEMENT.
V	INCIDENTAL MILLING
W	VARIABLE DEPTH ASPHALT PAVEMENT (SEE -L- WEDGING DETAIL)

NOTE: ALL PAVEMENT EDGE SLOPES ARE 1:1 UNLESS SHOWN OTHERWISE.

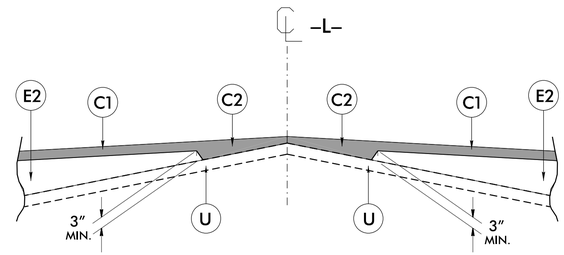

Detail Showing Method Of Wedging
-L-

MILLING DETAIL
INCIDENTAL MILLING AT BEGIN/END FOR TIE-INS

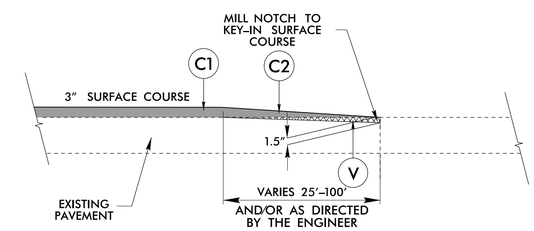

-L- STA. 14+50.00 TO STA. 14+87.50
-L- STA. 26+42.50 TO STA. 26+80.00

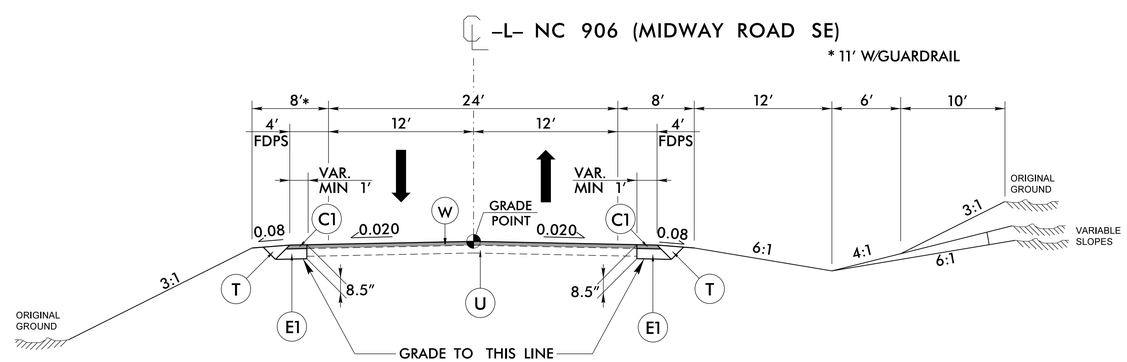

TYPICAL SECTION NO. 1

USE TYPICAL SECTION NO. 1

-L- STA. 14+50.00 TO STA. 16+12.10
-L- STA. 24+60.93 TO STA. 26+80.00

SYSTIME = 6/2/99
jjc:Floodes\Proj\B5311_Rdy_typ.dgn
jjc:Floodes

DocuSign Envelope ID: 48E0EF11-CBB6-4CF8-B808-71408370F230

6/2/99

PROJECT REFERENCE NO.	SHEET NO.
17BP.3.R.80	2A-2

ROADWAY DESIGN ENGINEER

NORTH CAROLINA 3/7/2022 SEAL 033400 ENGINEER

DocuSigned by: Dustin Van Keiser
E6FA5B09BED54C3...

PAVEMENT DESIGN ENGINEER

CDM Smith
CDM Smith Inc.
5400 Glenwood Avenue
Suite 400
Raleigh, NC 27612-3228
NC COA No. F-1255

DOCUMENT NOT CONSIDERED FINAL UNLESS ALL SIGNATURES COMPLETED

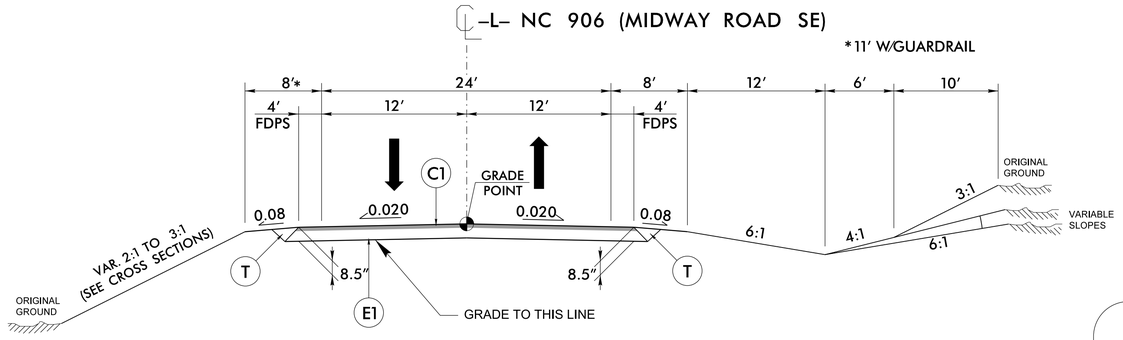

NOTE: 2:1 SLOPES USED WITH ROCK PLATING

TYPICAL SECTION NO. 2

USE TYPICAL SECTION NO. 2

–L– STA. 16+12.10 TO STA. 19+35.50 (BEGIN BRIDGE)
–L– STA. 21+00.50 (END BRIDGE) TO STA 24+60.93

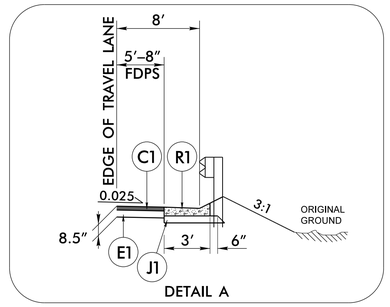

DETAIL A

USE DETAIL A IN CONJUNCTION WITH TYPICAL SECTION NO. 2

–L– STA. 18+00.00 TO STA. 19+11.00 (LT)
–L– STA. 21+24.00 TO STA. 22+02.00 (LT)

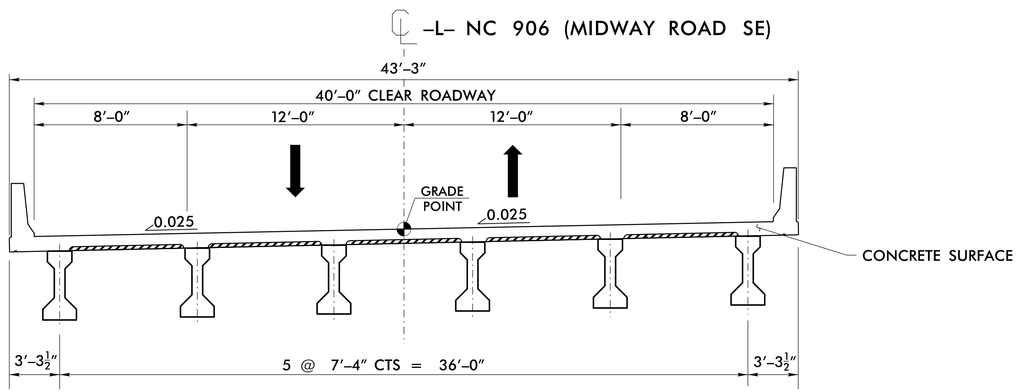

TYPICAL SECTION NO. 3

USE BRIDGE TYPICAL SECTION NO. 3

–L– STA. 19+35.50 (BEGIN BRIDGE) TO STA. 21+00.50 (END BRIDGE)

PAVEMENT SCHEDULE
(FINAL PAVEMENT DESIGN)

C1	3″ S9.5B
C2	VAR. S9.5B
E1	5.5″ B25.0C
E2	VAR. B25.0C
J1	8″ ABC
R1	SBG
T	EARTH MATERIAL
U	EXIST. PAVEMENT
V	INCIDENTAL MILLING
W	WEDGING

PAVEMENT EDGESLOPES 1:1 UNLESS NOTED OTHERWISE

-SYSTIME-
pw:\\cdmsmith.pw.bentley.com:pwdc\Projects\B5311_Rdy_typ.dgn

STATE OF NORTH CAROLINA
DEPT. OF TRANSPORTATION
DIVISION OF HIGHWAYS
RALEIGH, N.C.

ENGLISH DETAIL DRAWING FOR
METHOD OF CLEARING
MODIFIED METHOD - III

SHEET 1 OF 1
200D03

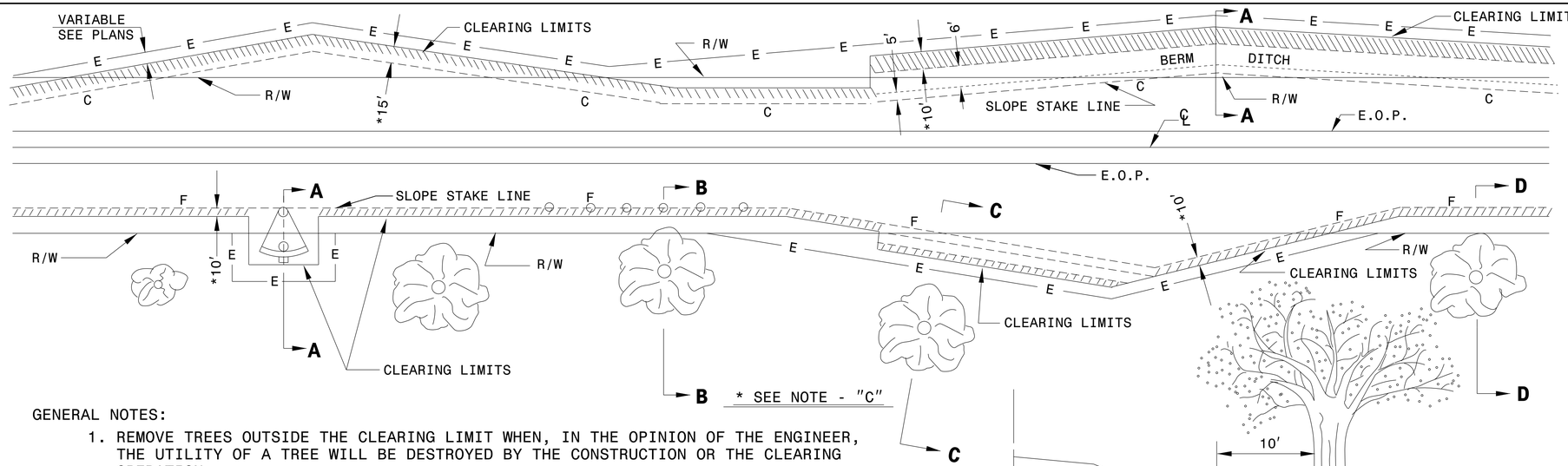

GENERAL NOTES:

1. REMOVE TREES OUTSIDE THE CLEARING LIMIT WHEN, IN THE OPINION OF THE ENGINEER, THE UTILITY OF A TREE WILL BE DESTROYED BY THE CONSTRUCTION OR THE CLEARING OPERATION.
2. CLEAR IN ACCORDANCE WITH THIS STANDARD EXCEPT WHERE ADDITIONAL CLEARING IS REQUIRED FOR SAFETY AS SHOWN ON THE PLANS.

METHOD III CLEARING LIMITS

(A) CUTS -- CLEAR TO CONSTRUCTION LIMITS.
(B) FILLS - CLEAR TO 5'/10' * BEYOND CONSTRUCTION LIMITS, UNLESS SPECIFIED OTHERWISE BY WETLAND PERMIT.
(C) CUTS AND FILLS - WHEN THE CLEARING LIMITS (A AND B) EXCEED THE PROPOSED R/W OR PROPOSED CONSTRUCTION EASEMENTS, THEN CLEAR ONLY TO THE R/W OR CONSTRUCTION EASEMENT WHICHEVER IS GREATER.

* FOR FILL HEIGHTS LESS THAN 10' CLEAR TO 5' BEYOND CONSTRUCTION LIMITS.
* FOR FILL HEIGHTS 10' OR GREATER CLEAR TO 10' BEYOND CONSTRUCTION LIMITS.
** PLACE SILT FENCE AT 5' BEYOND TOE OF SLOPE IN FILL SECTIONS WITH LESS THAN 10'. PLACE SILT FENCE AT 10' BEYOND TOE OF SLOPE IN FILL SECTIONS WITH 10' OR GREATER.

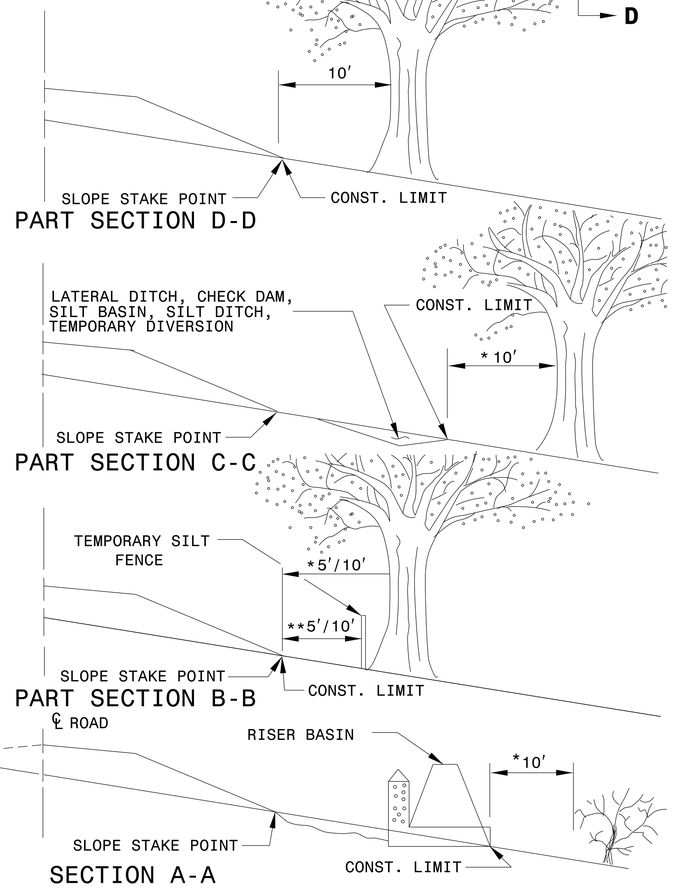

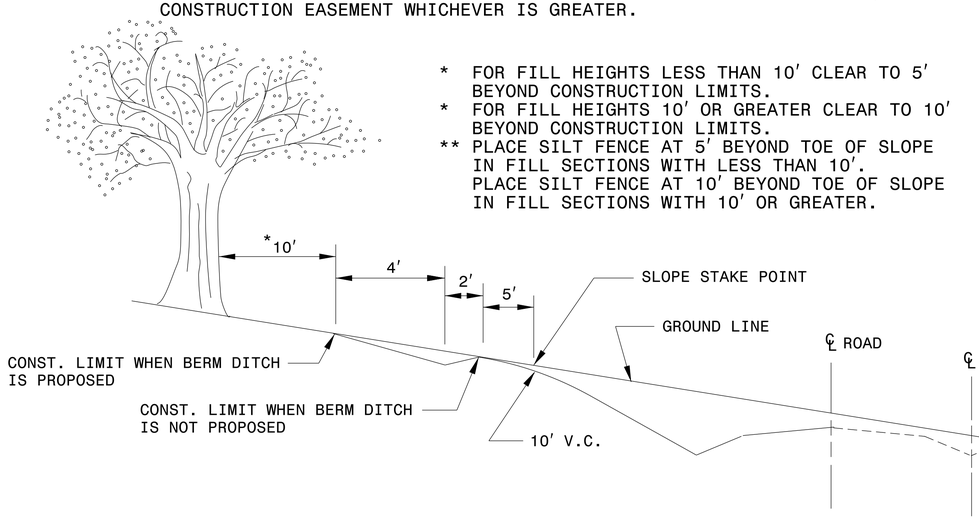

STATE OF NORTH CAROLINA
DEPT. OF TRANSPORTATION
DIVISION OF HIGHWAYS
RALEIGH, N.C.

ENGLISH DETAIL DRAWING FOR
METHOD OF CLEARING
MODIFIED METHOD - III

SHEET 1 OF 1
200D03

CONTRACT STANDARDS AND DEVELOPMENT UNIT
Office 919-707-6950 FAX 919-250-4119

SEE TITLE BLOCK

ORIGINAL BY:	T.S.S.	DATE:	FEB.2000
MODIFIED BY:	K.A.K.	DATE:	AUG.2016
CHECKED BY:		DATE:	
FILE SPEC.:	kkempf/english/0200d301.dgn		

5/14/99
$$$$SYSTIME$$$$
$$$$USERNAME$$$$

PROJECT REFERENCE NO.	SHEET NO.
17BP.3.R.80 (B-5311)	2G-1

GEOTECHNICAL ENGINEER

NORTH CAROLINA PROFESSIONAL SEAL 032171 ENGINEER JINYOUNG PARK

DocuSigned by: 10/27/2021

SIGNATURE DATE

ENGINEER

SIGNATURE DATE

DOCUMENT NOT CONSIDERED FINAL UNLESS ALL SIGNATURES COMPLETED

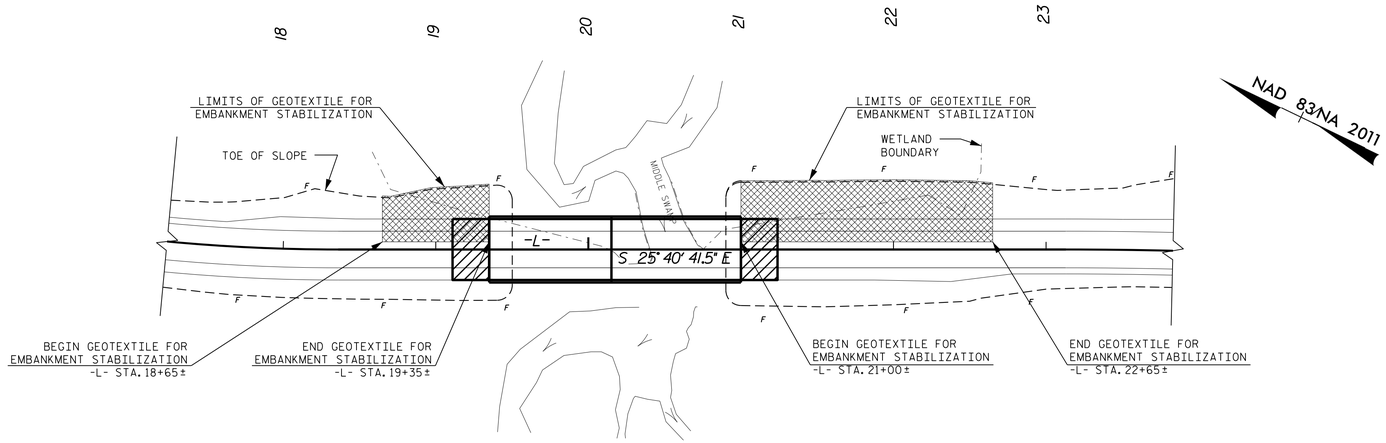

① PLAN VIEW
N.T.S.

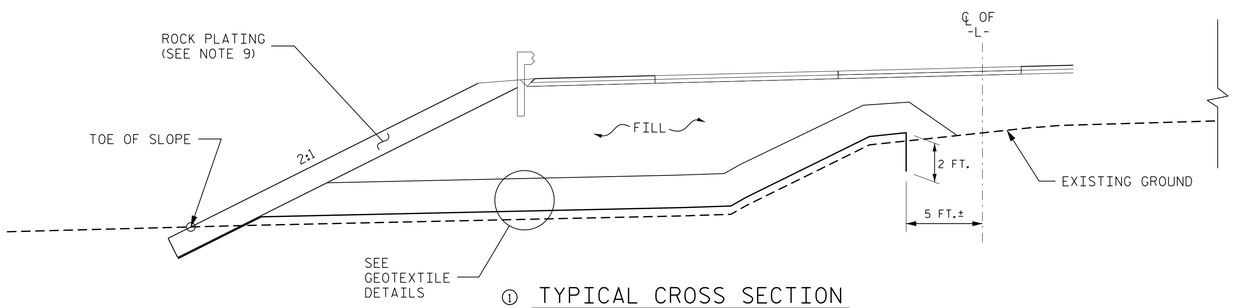

① TYPICAL CROSS SECTION
N.T.S.

NOTES

1. DO NOT GRUB, ONLY CLEAR THE AREA WITHIN THE LIMITS OF THE GEOTEXTILE FOR EMBANKMENT STABILIZATION.
2. PLACE GEOTEXTILE FOR EMBANKMENT STABILIZATION PERPENDICULAR TO EMBANKMENT CENTERLINE ON THE EXISTING GROUND AS SHOWN IN THE PLAN OR AS DIRECTED BY THE ENGINEER.
3. PLACE THE GEOTEXTILE WITHOUT ANY WRINKLES OR CREASES.
4. PLACE 3 FT. OF SELECT GRANULAR MATERIAL ON THE GEOTEXTILE FOR EMBANKMENT STABILIZATION.
5. NO SEAMS OR JOINTS ARE ALLOWED IN THE MACHINE DIRECTION OF GEOTEXTILE.
6. THE TERMS ROLL AND MACHINE DIRECTION ARE USED INTERCHANGEABLY.
7. ALL JOINTS IN THE CROSS MACHINE DIRECTION MUST BE OVERLAPPED A MINMUM OF 18 INCHES.
8. FOR GEOTEXTILE FOR EMBANKMENT STABILIZATION, SEE GEOTEXTILE FOR EMBANKMENT STABILIZATION SPECIAL PROVISION.
9. ① FOR ROCK PLATING, SEE ROADWAY PLAN SHEET 3G-1.

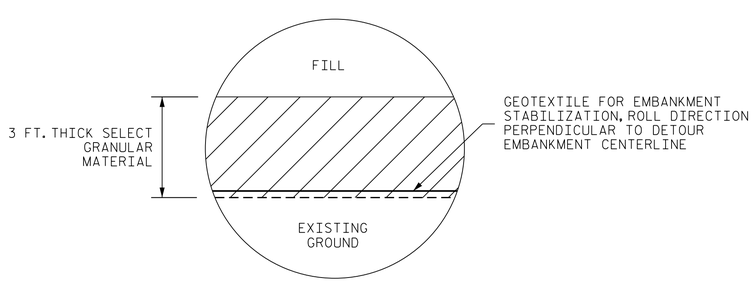

GEOTEXTILE DETAILS
N.T.S.

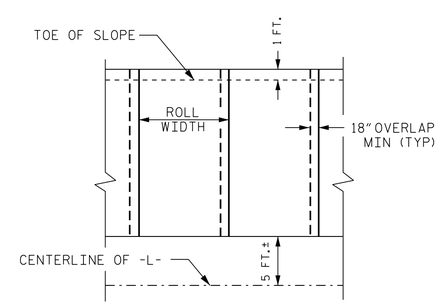

GEOTEXTILE OVERLAP DETAIL
(PLAN VIEW, N.T.S.)

① *QUANTITIES*

GEOTEXTILE FOR EMBANKMENT STABILIZATION	1,200 SY#
SELECT GRANULAR MATERIAL	1,050 CY

GEOTEXTILE FOR EMBANKMENT STABILIZATION ESTIMATED QUANTITY DOES NOT INCLUDE OVERLAPS OR WASTE.

NORTH CAROLINA DEPARTMENT OF TRANSPORTATION DIVISION OF HIGHWAYS

GEOTECHNICAL ENGINEERING UNIT

GEOTEXTILE FOR EMBANKMENT STABILIZATION DETAILS

REVISIONS

NO.	BY	DATE	NO.	BY	DATE
1	J. PARK	10 / 2021	3		
2			4		

PREPARED BY: J. PARK	DATE: 8 / 2018
REVIEWED BY: J. BATTS	DATE: 8 / 2018

PROJECT REFERENCE NO.	SHEET NO.
17BP.3.R.80 (B-5311)	2G-2

GEOTECHNICAL ENGINEER

NORTH CAROLINA PROFESSIONAL SEAL 032171 ENGINEER JINYOUNG PARK

DocuSigned by: A713DB5C91B4498

03/11/2022

SIGNATURE DATE

ENGINEER

SIGNATURE DATE

DOCUMENT NOT CONSIDERED FINAL UNLESS ALL SIGNATURES COMPLETED

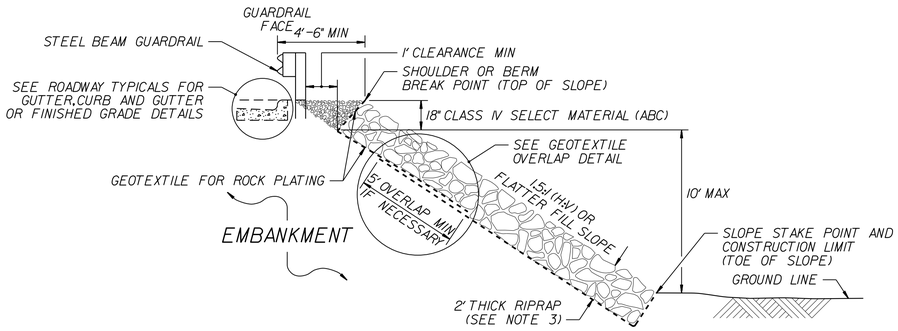

ROCK PLATING DETAIL NO. 1 – TYPICAL SECTION

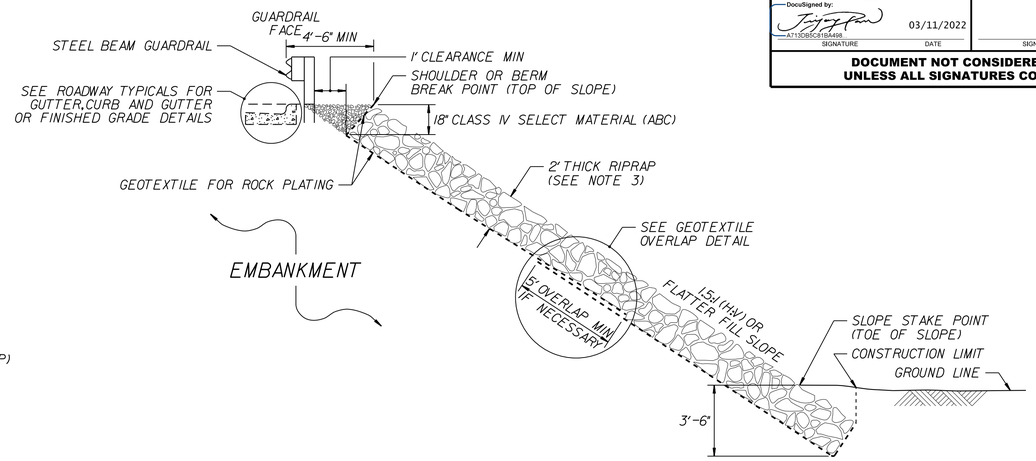

ROCK PLATING DETAIL NO. 2 – TYPICAL SECTION

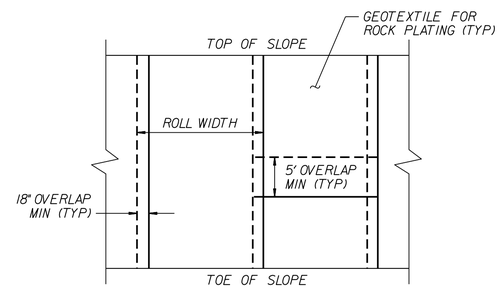

GEOTEXTILE OVERLAP DETAIL

(PLAN VIEW)

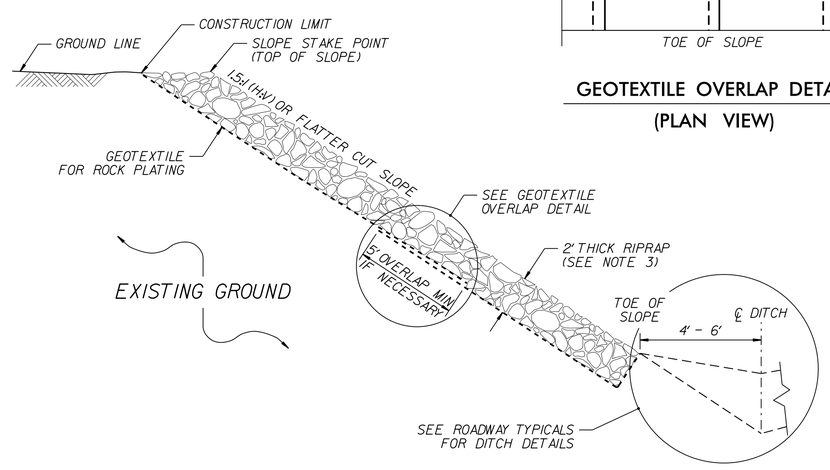

ROCK PLATING DETAIL NO. 3 – TYPICAL SECTION

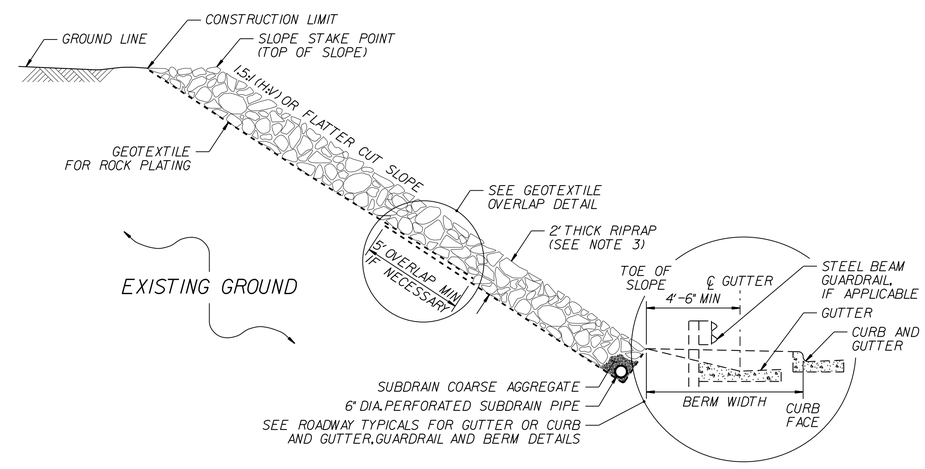

ROCK PLATING DETAIL NO. 4 – TYPICAL SECTION

NOTES:

1. SEE ROADWAY PLANS AND SUMMARY SHEETS FOR ROCK PLATING LOCATIONS.
2. FOR ROCK PLATING,SEE ROCK PLATING (SPECIAL) PROVISION.
3. USE CLASS I,2 OR B RIPRAP UNLESS REQUIRED OTHERWISE IN THE ROADWAY SUMMARY SHEETS.

PREPARED BY: JINYOUNG PARK	DATE: 03/2022
REVIEWED BY: JAMEY BATTS	DATE: 03/2022

STATE OF NORTH CAROLINA DEPARTMENT OF TRANSPORTATION

NORTH CAROLINA DEPARTMENT OF TRANSPORTATION DIVISION OF HIGHWAYS

GEOTECHNICAL ENGINEERING UNIT

MODIFIED STANDARD ROCK PLATING DETAILS

REVISIONS

NO.	BY	DATE	NO.	BY	DATE
1			3		
2			4		

COMPUTED BY: R. DEMUYNCK DATE: 10/29/2021
CHECKED BY: A. CONRAD DATE: 10/29/2021

PROJECT REFERENCE NO.	SHEET NO.
17BP.3.R.80	3B-1

STATE OF NORTH CAROLINA
DIVISION OF HIGHWAYS

"N" = DISTANCE FROM EDGE OF LANE TO FACE OF GUARDRAIL.
TOTAL SHOULDER WIDTH = DISTANCE FROM EDGE OF TRAVEL LANE TO SHOULDER BREAK POINT.
FLARE LENGTH = DISTANCE FROM LAST SECTION OF PARALLEL GUARDRAIL TO END OF GUARDRAIL.
W = TOTAL WIDTH OF FLARE FROM BEGINNING OF TAPER TO END OF GUARDRAIL.
G = GATING IMPACT ATTENUATOR TYPE 350
NG = NON-GATING IMPACT ATTENUATOR TYPE 350

GUARDRAIL SUMMARY

SURVEY LINE	BEG. STA.	END STA.	LOCATION	LENGTH			WARRANT POINT		"N" DIST. FROM E.O.L.	TOTAL SHOUL. WIDTH	FLARE LENGTH		W		ANCHORS									IMPACT ATTENUATOR TYPE 350			SINGLE FACED GUARDRAIL	REMOVE EXISTING GUARDRAIL	REMOVE AND STOCKPILE EXISTING GUARDRAIL	REMARKS
				STRAIGHT	SHOP CURVED	DOUBLE FACED	APPROACH END	TRAILING END			APPROACH END	TRAILING END	APPROACH END	TRAILING END	TYPE B-77	GREU TL-3								EA	G	NG				
-L-	16+35.00	19+35.00	RT	300.00			19+35.00		8.00	11.00	50.00		1.00		1	1														
-L-	17+97.50	19+35.00	LT	137.50				19+35.00	8.00	11.00		50.00		1.00	1	1														
-L-	21+00.00	22+37.50	RT	137.50				21+00.00	8.00	11.00		50.00		1.00	1	1														
-L-	21+00.00	24+00.00	LT	300.00			21+00.00		8.00	11.00	50.00		1.00		1	1														
-L-	17+47.30	22+03.71	RT																									460.00		
-L-	19+17.16	23+13.56	LT																									400.00		
			SUBTOTALS	875.00											4	4												860.00		
			TYPE B-77, 4@22.875'	-91.50																										
			GREU TL-3, 4@50.00'	-200.00																										
			PROJECT TOTALS	583.50											4	4												860.00		
			SAY	587.50											4	4												860.00		
ADDITIONAL GUARDRAIL POSTS = 10 EA																														

SUMMARY OF EARTHWORK (CY)

LOCATION	UNCLASSIFIED EXCAVATION	UNDERCUT	EMBT+%	BORROW	WASTE
-L- 14+50.00 - 19+35.50	201		3,081	2,880	
-L- 21+00.50 - 26+80.00	72		4,330	4,258	
SUBTOTAL	273		7,411	7,138	
TOTAL	273		7,411	7,138	
PROJECT TOTAL	273		7,411	7,138	
EST. 5% TO REPLACE TOP SOIL ON BORROW PIT				357	
GRAND TOTAL	273		7,411	7,495	
SAY	300			7,500	

UNDERCUT (CONTINGENCY) = 300 CY
SELECT GRANULAR MATERIAL, CLASS III (CONTINGENCY) = 300 CY

NOTE: Earthwork quantities are calculated by the Roadway Design Unit. These earthwork quantities are based in part on subsurface data provided by the Geotechnical Engineering Unit.

Note: Approximate quantities only. Unclassified Excavation, Fine Grading, Clearing and Grubbing, and Removal of Existing Pavement will be paid for at the contract lump sum price for "Grading."

SUMMARY OF PAVEMENT REMOVAL (SY)

LINE	STATION - STATION	LOCATION	REMOVAL (SY)
-L-	STA. 14+50 TO STA. 14+65	LT	0.86
-L-	STA. 14+50 TO STA. 14+63	RT	0.85
-L-	STA. 15+51 TO STA. 16+08	RT	8.36
-L-	STA. 16+12 TO STA. 20+19	CL	1,159.39
-L-	STA. 20+75 TO STA. 24+61	CL	1,090.89
-L-	STA. 25+66 TO STA. 25+98	RT	1.54
-L-	STA. 26+56 TO STA. 26+80	RT	1.20
-L-	STA. 26+67 TO STA. 26+80	LT	0.76
GRAND TOTAL			2,263
SAY			2,270

SUMMARY OF SHOULDER BERM GUTTER (LF)

LINE	STATION - STATION	LOCATION	LENGTH (LF)
-L-	STA. 18+00 +/- TO STA. 19+11 +/-	LT	111
-L-	STA. 21+24 +/- TO STA. 22+02 +/-	LT	78
GRAND TOTAL			189
SAY			190

6/21/00
SYSTIME = 8/27/2021 16:31
rtc_Proj=17BP.3.R.80 Rdy_sum_3B-1.dgn

7RDWYY0420180

COMPUTED BY:	PH	DATE:	04/07/2022
CHECKED BY:		DATE:	

NORTH CAROLINA DEPARTMENT OF TRANSPORTATION
DIVISION OF HIGHWAYS

PROJECT NO.	SHEET NO.
17BP.3.R.80	3D-1

Note: Invert Elevations indicated are for Bid Purposes only and shall not be used for project construction stakeout. See "Standard Specifications For Roads and Structures, Section 300-5".

LIST OF PIPES, ENDWALLS, ETC. (FOR PIPES 48 INCHES & UNDER)

| LINE & STATION / SIZE / THICKNESS OR GAUGE | OFFSET | STRUCTURE NUMBER FROM | STRUCTURE NUMBER TO | TOP ELEVATION FT. | INVERT ELEVATION FT. | INVERT ELEVATION FT. | MINIMUM REQUIRED SLOPE % | C. S. PIPE 12 .064 | C. S. PIPE 15 .064 | C. S. PIPE 18 .064 | C. S. PIPE 24 .064 | C. S. PIPE 30 .079 | C. S. PIPE 36 .079 | C. S. PIPE 42 .109 | C. S. PIPE 48 .109 | C. S. PIPE 54 | C. S. PIPE 60 | C. S. PIPE 66 | C. S. PIPE 72 | C. S. PIPE 78 | C. S. PIPE 84 | R. C. PIPE CLASS III 12 | R. C. PIPE CLASS III 15 | R. C. PIPE CLASS III 18 | R. C. PIPE CLASS III 24 | R. C. PIPE CLASS III 30 | R. C. PIPE CLASS III 36 | R. C. PIPE CLASS III 42 | R. C. PIPE CLASS III 48 | R. C. PIPE CLASS III 54 | R. C. PIPE CLASS III 60 | R. C. PIPE CLASS III 66 | R. C. PIPE CLASS III 72 | R. C. PIPE CLASS III 78 | R. C. PIPE CLASS III 84 | ENDWALLS STD. 838.01 AND STD. 838.11 (UNLESS NOTED OTHERWISE) CY | REINFORCED ENDWALLS CY | DRAINAGE STRUCTURE MASONRY CY | QUANTITIES FOR DRAINAGE STRUCTURES (NOTE: TOTAL LIN. FT. FOR PAY QUANTITY SHALL BE A + (1.3 X B)) 0' THRU 5' EACH | A: 5' THRU 10' LIN. FT. | B: 10' AND ABOVE LIN. FT. | C.B. STD. 840.01 OR STD. 840.02 | FRAME, GRATES, AND HOOD STD. 840.03 GRATE TYPE E | F | G | CONCRETE TRANSITIONAL SECTION D.I. STD. 852.04 OR STD. 852.06 | C.B. STD. 852.05 | OPEN THROAT C.B. STD. 840.04 OR STD. 840.05 | CONCRETE BRIDGE APPROACH D.I. STD. 840.13 | D.I. STD. 840.14 OR STD. 840.15 | D.I. FRAME AND GRATES STD. 840.16 | G.D.I. TYPE "A" STD. 840.17 OR STD. 840.26 | G.D.I. TYPE "B" STD. 840.18 OR STD. 840.27 | G.D.I. TYPE "D" STD. 840.19 OR STD. 840.28 | G.D.I. (W.S. FLAT) FRAME WITH GRATE STD. 840.20 | G.D.I. (W.S. FLAT) FRAME W/ 2 GRATES STD. 840.20 | G.D.I. (W.S. SAG) FRAME W/ GRATE STD. 840.22 | G.D.I. (W.S. SAG) FRAME W/ 2 GRATES STD. 840.22 | G.D.I. (N.S. SAG) FRAME W/ GRATE STD. 840.24 | G.D.I. (N.S. SAG) FRAME W/ 2 GRATES STD. 840.24 | G.D.I. (N.S. FLAT) FRAME W/ GRATE STD. 840.29 | G.D.I. (N.S. FLAT) FRAME W/ 2 GRATES STD. 840.29 | DRIVEWAY D.I. STD. 840.30 | FRAME W/ GRATE FOR DRIVEWAY STD. 840.30 | J.B. STD. 840.31 OR STD. 840.32 | ANGLED VANE GRATES AND FRAMES STD. 840.33 | T.B.J.B. STD. 840.34 | T.B.D.I. STD. 840.35 | M.H. STD. 840.51, STD. 840.52, OR STD. 840.53 | M.H. FRAME AND COVER STD. 840.54 | CONVERT EXISTING C.B. TO J.B. | CONVERT EXISTING C.B. TO D.I. | CONVERT EXISTING D.I. TO J.B. | CONVERT EXISTING J.B. TO D.I. | ADJUST C.B. | ADJUST D.I. | 15" DRAINAGE PIPE ELBOW | FLOWABLE FILL CY | CONCRETE COLLARS CL. "B" STD. 840.72 CY | CONCRETE AND BRICK PIPE PLUG STD. 840.71 CY | PIPE REMOVAL LIN. FT. | REMARKS |
|---|---|---|---

COMPUTED BY: Tyler Bottoms DATE: 8/24/21 .
CHECKED BY: Jinyoung Park DATE: 9/17/21
REVISED BY: Jinyoung Park DATE: 9/17/21

(12-17-19)

STATE OF NORTH CAROLINA
DIVISION OF HIGHWAYS

PROJECT NO.	SHEET NO.
17BP.3.R.80 (B-5311)	3G-1

SUMMARY OF SUBSURFACE DRAINAGE

LINE	Station	Station	Location LT/RT/CL	Drain Type* UD/BD/SD	LF
CONTINGENCY				SD	200
				TOTAL LF:	200

*UD = Underdrain
*BD = Blind Drain
*SD = Subsurface Drain

SUMMARY OF ROCK PLATING

LINE	Beginning Slope (H:V)	Approx. Station	Ending Slope (H:V)	Approx. Station	Location LT/RT	Rock Plating Detail No. 1/2/3/4	Riprap Class* 1/2/B	Rock Plating SY
-L-	2.5:1	18+25 ±	2:1	19+15 ±	LT	2	2	150
-L-	2:1	21+15 ±	2.5:1	22+75 ±	LT	2	2	400
							TOTAL SY:	550

*Use Class 1, 2 or B riprap if riprap class is not shown for rock plating location.

DocuSign Envelope ID: 46BA6430-7D7D-480E-9EFE-09D744A50B1D

PROJECT REFERENCE NO.	SHEET NO.
17BP.3.R.80	4
R/W SHEET NO.	

ROADWAY DESIGN ENGINEER: NORTH CAROLINA 9/25/2022 SEAL 033400 ENGINEER — DocuSigned by: David W. Lassiter — E6FA5B09BED34EG

HYDRAULICS ENGINEER: NORTH CAROLINA 9/25/2022 SEAL 053755 ENGINEER — DocuSigned by: Patrick M. Barnett — D6CE6CC9398AED...

CDM Smith — CDM Smith Inc. 5400 Glenwood Avenue Suite 400 Raleigh, NC 27612-3228 NC COA No. F-1255

SUMMIT Design and Engineering Services — Summit Design and Engineering Services 504 Meadowland Drive Hillsborough, NC 27278 NC FIRM LICENSE No: P-0339

DOCUMENT NOT CONSIDERED FINAL UNLESS ALL SIGNATURES COMPLETED

REVISIONS

8/17/99

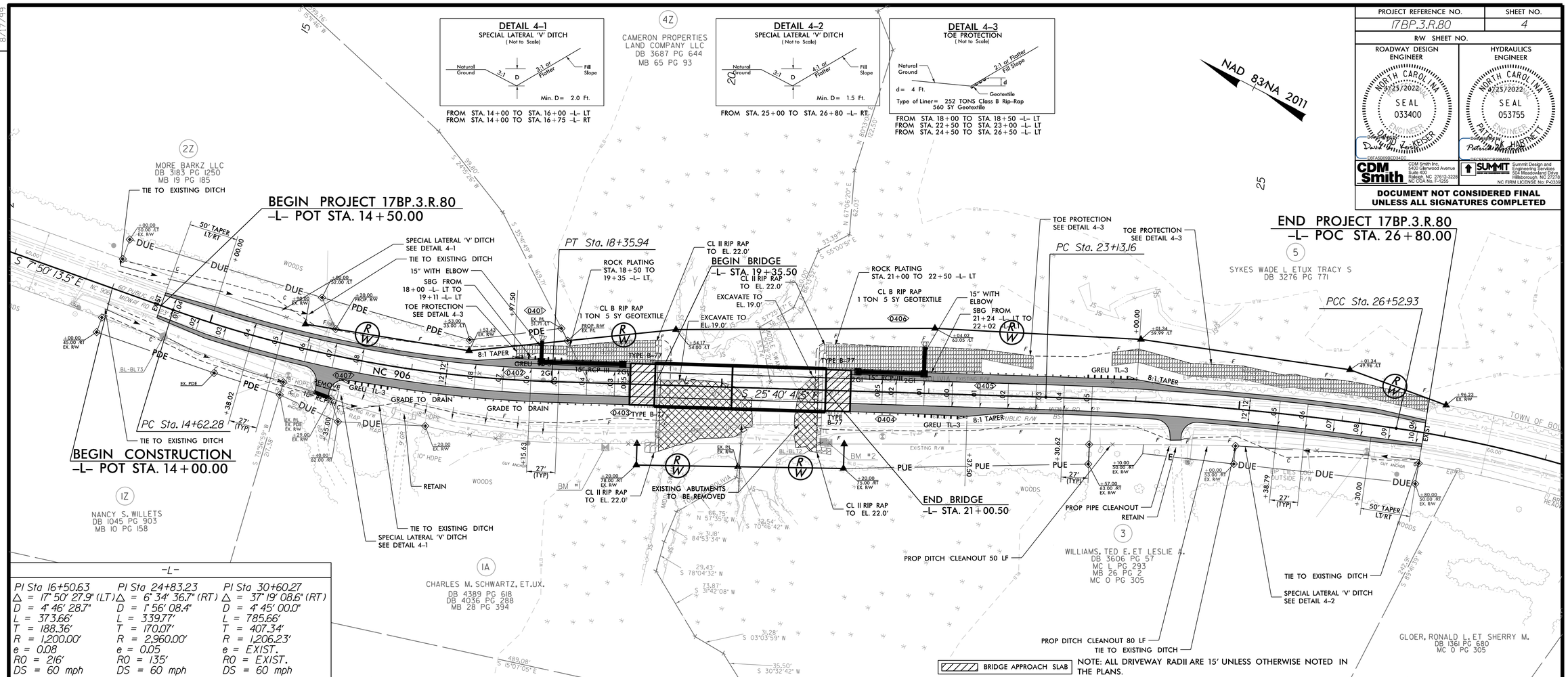

-L-		
PI Sta 16+50.63	PI Sta 24+83.23	PI Sta 30+60.27
Δ = 17° 50' 27.9" (LT)	Δ = 6° 34' 36.7" (RT)	Δ = 37° 19' 08.6" (RT)
D = 4° 46' 28.7"	D = 1° 56' 08.4"	D = 4° 45' 00.0"
L = 373.66'	L = 339.77'	L = 785.66'
T = 188.36'	T = 170.07'	T = 407.34'
R = 1,200.00'	R = 2,960.00'	R = 1,206.23'
e = 0.08	e = 0.05	e = EXIST.
R0 = 216'	R0 = 135'	R0 = EXIST.
DS = 60 mph	DS = 60 mph	DS = 60 mph

RIGHT DITCH ---------

LEFT DITCH — · · — · · —

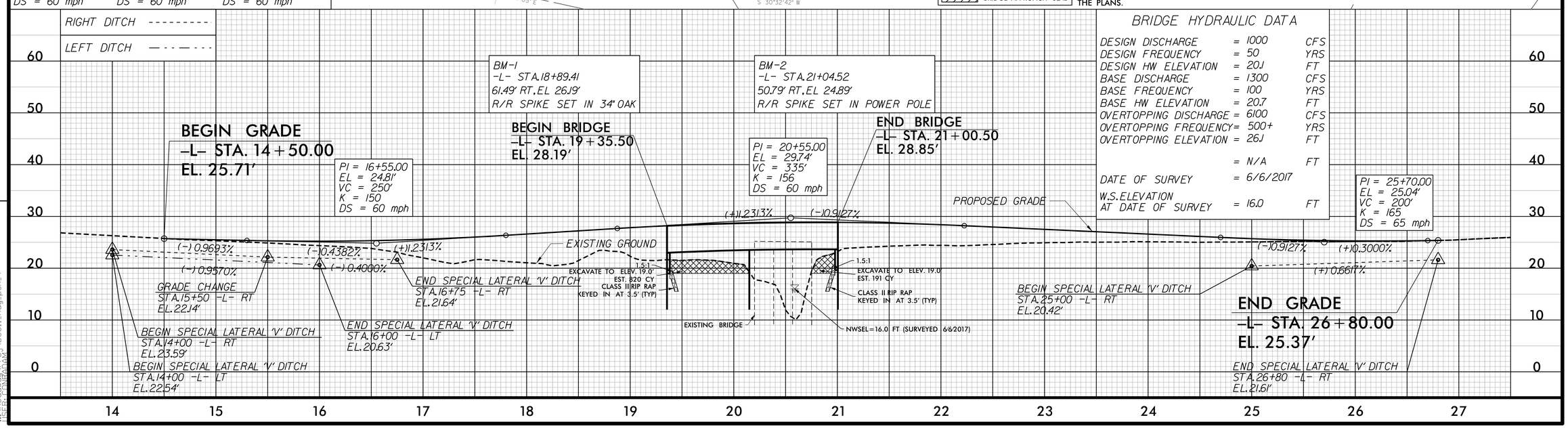

BRIDGE HYDRAULIC DATA		
DESIGN DISCHARGE	= 1000	CFS
DESIGN FREQUENCY	= 50	YRS
DESIGN HW ELEVATION	= 20.1	FT
BASE DISCHARGE	= 1300	CFS
BASE FREQUENCY	= 100	YRS
BASE HW ELEVATION	= 20.7	FT
OVERTOPPING DISCHARGE	= 6100	CFS
OVERTOPPING FREQUENCY	= 500+	YRS
OVERTOPPING ELEVATION	= 26.1	FT
	= N/A	FT
DATE OF SURVEY	= 6/6/2017	
W.S. ELEVATION AT DATE OF SURVEY	= 16.0	FT

-SYSTIME-
-USER:pbarnett-
-pw:\\pwdent.bentley.com:pwdatastd\PW_WORK\pw_wf\55311_Rdy_psh_4
-DGN:pbarnett_55311_Rdy_psh_4-

STATE	STATE PROJECT REFERENCE NO.	SHEET NO.	TOTAL SHEETS
N.C.	17BP.3.R.80	RW01	5

TIP PROJECT: 17BP.3.R.80

STATE OF NORTH CAROLINA
DIVISION OF HIGHWAYS

SURVEY CONTROL, EXISTING CENTERLINES,
RIGHT OF WAY, EASEMENTS AND PROPERTY TIES

BRUNSWICK COUNTY

LOCATION: BRIDGE NO. 104 OVER MIDDLE SWAMP ON NC 906 (MIDWAY ROAD SE)

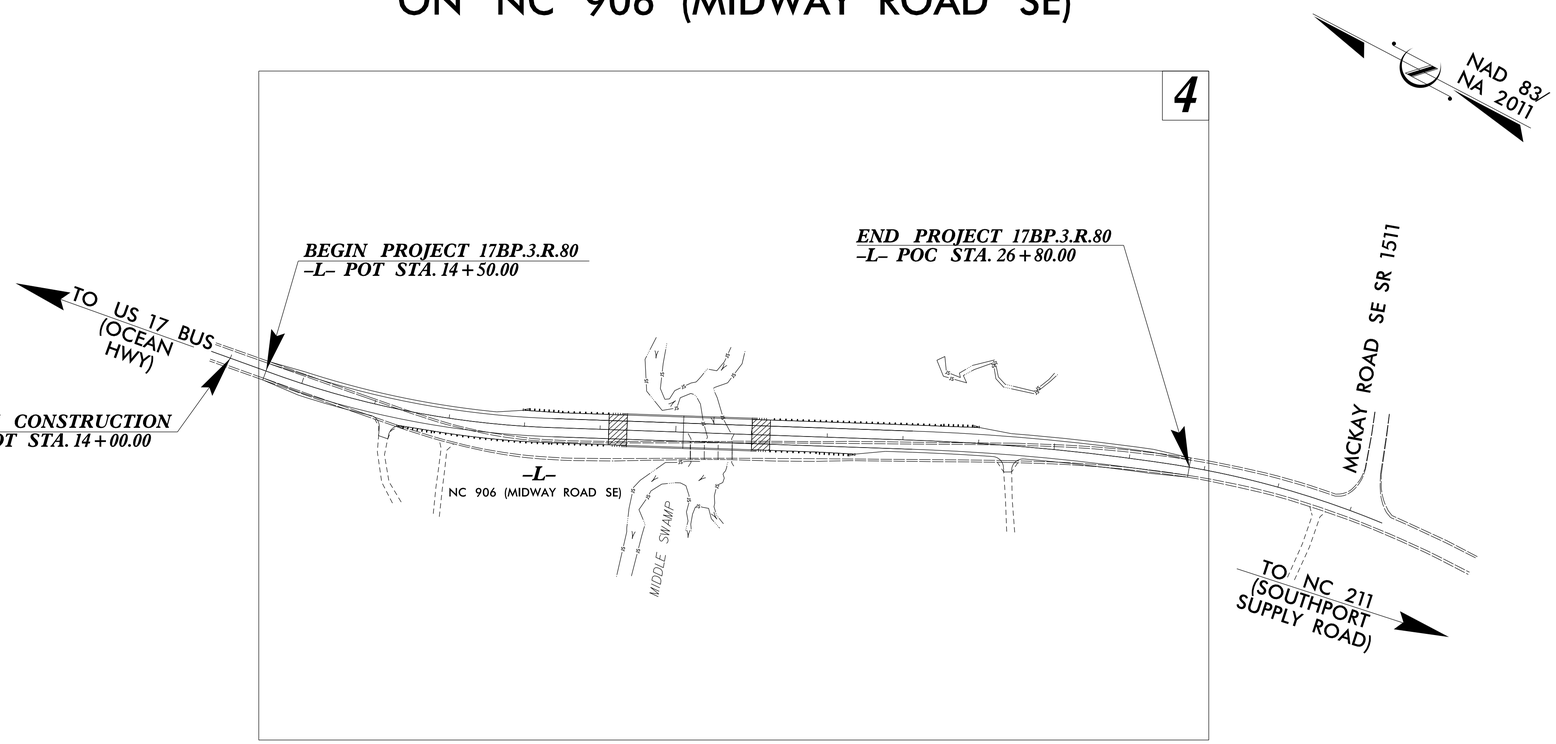

GRAPHIC SCALE
FOR PLAN SHEET RW04

60 30 0 60 120
PLANS

DATUM DESCRIPTION

THE LOCALIZED COORDINATE SYSTEM DEVELOPED FOR THIS PROJECT
IS BASED ON THE STATE PLANE COORDINATES ESTABLISHED BY
NCGS FOR MONUMENT "GPS2"
WITH NAD 83/NSRS 2011 STATE PLANE GRID COORDINATES OF
NORTHING: 112241.097(ft) EASTING: 2256300.363(ft)
ELEVATION: 29.02(ft)
THE AVERAGE COMBINED GRID FACTOR USED ON THIS PROJECT
(GROUND TO GRID) IS: 1.000092895110
THE N.C. LAMBERT GRID BEARING AND
LOCALIZED HORIZONTAL GROUND DISTANCE FROM
"GPS2" TO -L- STATION 10+00.00 IS
S 01-02'23.7" E 222.25(ft)
ALL LINEAR DIMENSIONS ARE LOCALIZED HORIZONTAL DISTANCES
VERTICAL DATUM USED IS NAVD 88

Prepared In the Office of:

DIVISION 3
LOCATION AND SURVEY'S UNIT
5310 BARBADOS BLVD, SUITE 102
CASTLE HAYNE, NORTH CAROLINA 28429

2018 STANDARD SPECIFICATIONS

RIGHT OF WAY DATE:	*LETTING DATE:*
NOVEMBER 26, 2021	*JULY 21, 2022*

PROFESSIONAL LAND SURVEYOR

NORTH CAROLINA PROFESSIONAL SEAL L-4526 LAND SURVEYOR CHRISTOPHER T. SAWYER

DocuSigned by:
Christopher T. Sawyer
C1E7D0F1D21407...
06/01/2022
SIGNATURE: *Date:*

STATE OF NORTH CAROLINA DEPARTMENT OF TRANSPORTATION

09/08/99

26-MAY-2022 15:30
S:\Units\Div03\Projects\BRIDGE\Brunswick\B53IL0104\Working\150 Series Sheets\220526 revised row\17BP.3.R.80_ls_rw01.dgn
mjduval AT LS-299896

SURVEY CONTROL SHEET

W/ EXISTING CENTERLINE ALIGNMENTS PRIOR TO CONSTRUCTION

PROJECT REFERENCE NO.	SHEET NO.
17BP.3.R.80	RW02C-1

Location and Surveys

DIVISION 3
LOCATION AND SURVEY'S UNIT
5310 BARBADOS BLVD, SUITE 102
CASTLE HAYNE, NORTH CAROLINA 28429

PROJECT SURVEYOR

NORTH CAROLINA PROFESSIONAL SEAL L-4526 LAND SURVEYOR CHRISTOPHER J. SAWYER

DOCUMENT NOT CONSIDERED FINAL UNLESS ALL SIGNATURES COMPLETED

BL

POINT	DESC.	NORTH	EAST	ELEVATION
BL71	TRV CAP & REBAR	110189.5491	2256913.9370	27.56
BL72	TRV CAP & REBAR	110945.2166	2256543.9380	22.54
BL73	TRV CAP & REBAR	111557.1623	2256340.5050	24.40
B53112	GPS CAP & REBAR	112241.0970	2256300.3630	29.02
B53111	GPS CAP & REBAR	113387.6921	2256099.5340	34.85

I,Christopher J. Sawyer, PLS, certify that the Project Control was verified under my supervision from an actual GPS survey made under my supervision and the following information was used to perform the survey:

Class of survey: ***AA***
Type of GPS field procedure: RTN
Dates of survey: May 2016
Datum/Epoch: NAVD 88
Published/Fixed-control use: N/A for RTN
Localized around: GPS2
Northing: 112241.097
Easting: 2256300.363
Combined grid factor: 1.000092895110
Geoid model: 12A
Units: US Survey feet

I also certify that the Baseline Control for this project was completed under my direct and responsible charge from an actual survey made under my supervision; that all horizontal closures had a minimum ratio of precision of 1:20,000 (Class AA) and Vertical accuracy to Class A. Field work was performed May 2016, and all coordinates are based on NAD 83/2011 and all elevations are based on NAVD 88; that this survey was performed to meet the requirements of 21NCAC 56.1600 as applicable.

This 16th day of March, 2022.

DocuSigned by:
07D0C6E61D1487...

Professional Land Surveyor L-4526

NC GRID NAD 83 NA 2011

```
*****************************************
BM1        ELEVATION = 26.19
N 111130       E 2256443
RR SPIKE IN 34"OAK
*****************************************

*****************************************
BM2        ELEVATION = 24.89
N 110940       E 2256545
RR SPIKE IN POWER POLE
*****************************************
```

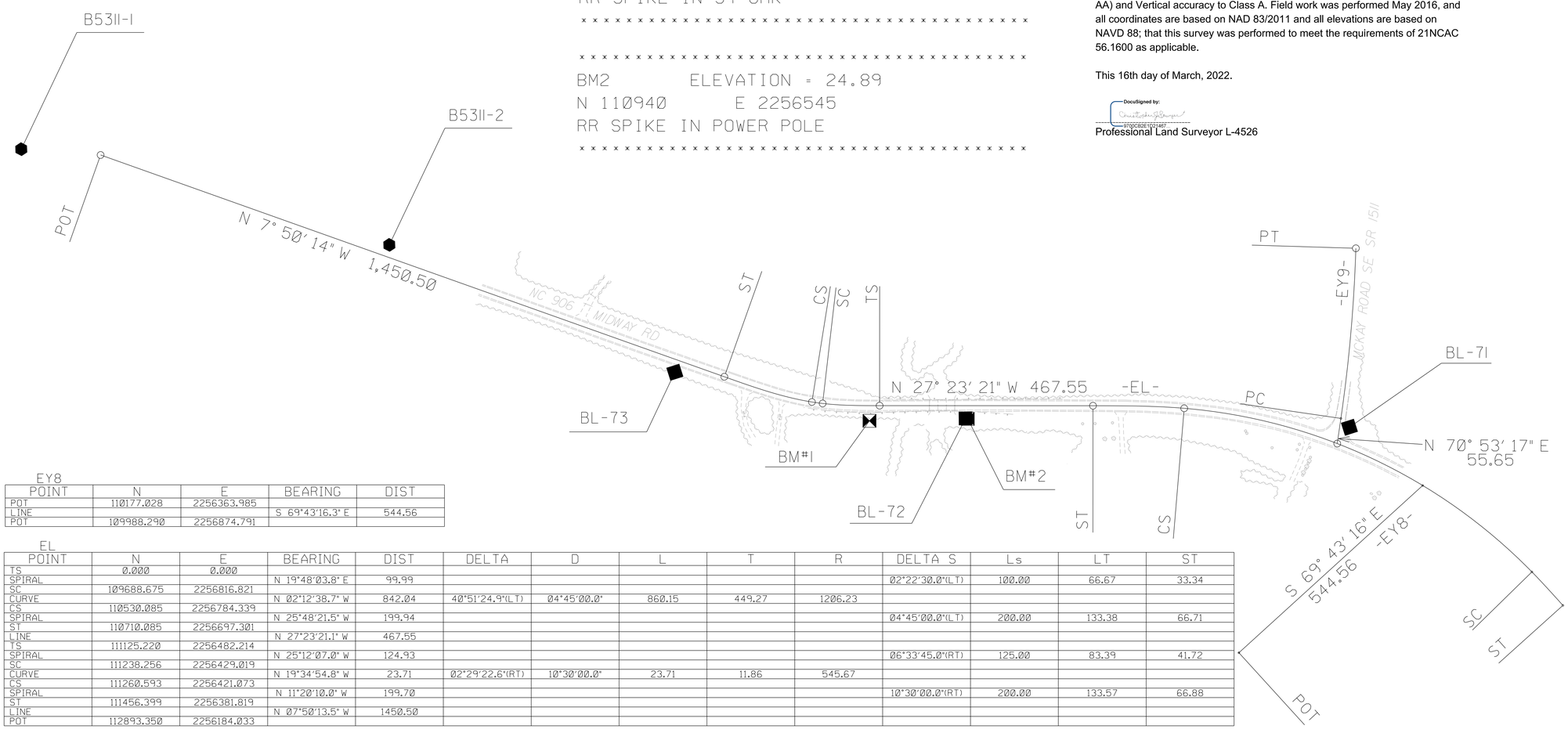

EY8

POINT	N	E	BEARING	DIST
POT	110177.028	2256363.985		
LINE			S 69°43'16.3" E	544.56
POT	109988.290	2256874.791		

EL

POINT	N	E	BEARING	DIST	DELTA	D	L	T	R	DELTA S	Ls	LT	ST
TS	0.000	0.000											
SPIRAL			N 19°48'03.8" E	99.99						02°22'30.0"(LT)	100.00	66.67	33.34
SC	109688.675	2256816.821											
CURVE			N 02°12'38.7" W	842.04	40°51'24.9"(LT)	04°45'00.0"	860.15	449.27	1206.23				
CS	110530.085	2256784.339											
SPIRAL			N 25°48'21.5" W	199.94						04°45'00.0"(LT)	200.00	133.38	66.71
ST	110710.085	2256697.301											
LINE			N 27°23'21.1" W	467.55									
TS	111125.220	2256482.214											
SPIRAL			N 25°12'07.0" W	124.93						06°33'45.0"(RT)	125.00	83.39	41.72
SC	111238.256	2256429.019											
CURVE			N 19°34'54.8" W	23.71	02°29'22.6"(RT)	10°30'00.0"	23.71	11.86	545.67				
CS	111260.593	2256421.073											
SPIRAL			N 11°20'10.0" W	199.70						10°30'00.0"(RT)	200.00	133.57	66.88
ST	111456.399	2256381.819											
LINE			N 07°50'13.5" W	1450.50									
POT	112893.350	2256184.033											

EY9

POINT	N	E	BEARING	DIST	DELTA	D	L	T	R
POT	110196.858	2256870.139							
LINE			N 70°53'17.4" E	55.65					
PC	110215.077	2256922.717							
CURVE			N 67°36'42.0" E	374.27	06°33'11.8"(LT)	01°45'00.0"	374.47	187.44	3274.04
PT	110357.629	2257268.776							

NOTES:

1. PROJECT CONTROL WAS ESTABLISHED USING GNSS, THE GLOBAL NAVIGATION SATELLITE SYSTEM.

2. THE SURVEY CONTROL DATA FOR THIS PROJECT HAS BEEN COMPILED FROM VARIOUS SOURCES. BASELINE CONTROL MONUMENTS FROM R-3434 WERE USED WITH NEW LEVELING AND TRAVERSE PERFORMED ON THE NA 2011 DATUM. THE EXISTING ALIGNMENTS FROM R-3434 WERE USED AND TRANSLATED TO THE NA 2011 DATUM. IF FURTHER INFORMATION REGARDING PROJECT CONTROL IS NEEDED, PLEASE CONTACT THE LOCATION AND SURVEYS UNIT.

16-MAR-2022 16:58
S:\Units\Div03\Projects\BRIDGE\Brunswick\B5311.0104\Working\150 Series Sheets\17BP.3.R.80_ls_rw02c-1.dgn
myduvol AT LS-294896

PROPOSED ALIGNMENT CONTROL SHEET

PROJECT REFERENCE NO.	SHEET NO.
17BP.3.R.80	RW02D-1

Location and Surveys

DIVISION 3
LOCATION AND SURVEY'S UNIT
5310 BARBADOS BLVD., SUITE 102
CASTLE HAYNE, NORTH CAROLINA 28429

PROJECT SURVEYOR

NORTH CAROLINA PROFESSIONAL SEAL L-4526 LAND SURVEYOR CHRISTOPHER J. SAWYER

DOCUMENT NOT CONSIDERED FINAL UNLESS ALL SIGNATURES COMPLETED

I, Christopher J. Sawyer, PLS, certify that the data compiled came from available surveys/mapping performed by others and provided to me by NCDOT and do not certify to the accuracy or quality of the individual data sources.

This 16th day of March, 2022.

DocuSigned by:
9700CB2E1D21467...

Professional Land Surveyor L-4526

L

TYPE	STATION	NORTH	EAST
POT	10+00.00	112018.8874	2256304.3966
PC	14+62.28	111560.9276	2256367.4314
PT	18+35.94	111204.5768	2256474.7327
PC	23+13.16	110774.4866	2256681.5195
PCC	26+52.93	110460.5012	2256810.8693
PT	34+38.60	109688.6745	2256816.8209

L(OLD ALIGNMENT)

TYPE	STATION	NORTH	EAST
POT	10+00.00	112018.9396	2256304.7710
PC	15+86.08	111438.4219	2256385.2952
PT	18+48.75	111189.6022	2256465.3015
PC	22+09.26	110870.5686	2256633.1711
PCC	26+64.46	110453.0502	2256813.3886
PT	35+42.94	109594.5943	2256782.9480

L(OLD ALIGNMENT) IS FOR REFERENCE ONLY. SOME OF THE R/W WAS PURCHASED UNDER THIS ALIGNMENT BEFORE THE PROJECT WAS REDESIGNED. PLEASE SEE THE MONUMENTS WITH "**".

NOTES:

1. PROJECT CONTROL WAS ESTABLISHED USING GNSS, THE GLOBAL NAVIGATION SATELLITE SYSTEM.

2. THE PROPOSED ALIGNMENT CONTROL DATA FOR THIS PROJECT HAS BEEN COMPILED FROM VARIOUS SOURCES. IF FURTHER INFORMATION REGARDING PROJECT CONTROL IS NEEDED, PLEASE CONTACT THE LOCATION AND SURVEYS UNIT.

6/2/99

REVISIONS

16-MAR-2022 08:53
S:\Units\Div03\Projects\BRIDGE\Brunswick\B5311_0104\Working\150 Series Sheets\17BP.3.R.80_LS_rw02d-1.dgn
mduval AT LS-99896

RIGHT OF WAY CONTROL SHEET

PROJECT REFERENCE NO.	SHEET NO.
17BP.3.R.80	RW03E-1REV

Location and Surveys

DIVISION 3
LOCATION AND SURVEY'S UNIT
5310 BARBADOS BLVD., SUITE 102
CASTLE HAYNE, NORTH CAROLINA 28429

PROJECT SURVEYOR

NORTH CAROLINA PROFESSIONAL SEAL L-4526 LAND SURVEYOR CHRISTOPHER J. SAWYER

DOCUMENT NOT CONSIDERED FINAL UNLESS ALL SIGNATURES COMPLETED

I , Christopher J. Sawyer , certify that the right of way and permanent easement monumentation for this project shown herein was completed under my direct and responsible charge from an actual survey made under my supervision; that all horizontal closures had a minimum ratio of precision of 1:10,000 (Class A). Field work was performed on January 27, 2022, and all coordinates are based on NAD83/2011; That this survey was performed to meet the requirements of 21NCAC 56.1600 as applicable.

This 12th day of April, 2022.

DocuSigned by:
Christopher J. Sawyer
9F0C2C8E1D0C4B0...

Professional Land Surveyor L-4526

ROW MARKER IRON PIN AND CAP-E

ALIGN	STATION	OFFSET	NORTH	EAST	
L	15+90.00	-23.35	111441.1868	2256414.2070	
L	16+70.34	-13.73	111362.4873	2256426.5623	
L	17+53.43	-24.48	111289.1735	2256464.3064	
L	17+61.80	56.24	111251.1553	2256392.5963	
L	17+85.68	57.60	111227.5479	2256400.9951	
L	19+11.60	57.63	111111.4172	2256455.5783	
L	19+20.00	78.00	111095.0202	2256440.8601	
L	19+20.00	57.38	111103.9555	2256459.4444	
L	19+54.17	-54.00	111121.4210	2256574.6262	NOT SET
L	21+20.00	75.00	110916.0717	2256530.2270	
L	21+20.00	51+40	110926.2959	2256551.4919	
L	22+04.02	-63.05	110900.1647	2256691.0471	NOT SET
L	24+01.34	-59.99	110718.8261	2256773.3555	
L	26+01.34	-49.96	110526.2684	2256840.4818	NOT SET
L	26+96.23	-30.00	110428.1321	2256852.9841	

ROW MARKER PERMANENT EASEMENT-E

ALIGN	STATION	OFFSET	NORTH	EAST	
L	14+00.00	-30.00	111626.7142	2256388.6591	
L	14+00.00	-50.00	111629.4413	2256408.4724	
L	14+00.00	45.00	111616.4874	2256314.3597	
L	14+00.00	30.00	111618.5328	2256329.2196	
L	14+99.10	30.58	111519.4356	2256342.8596	
L	15+00.92	-29.39	111527.6793	2256402.2906	
L	15+17.01	-44.72	111515.0065	2256420.1029	
L	15+17.96	45.42	111497.6883	2256331.6434	
L	15+82.17	48.81	111431.7280	2256342.2319	
L	15+92.58	-23.09	111438.6709	2256414.5585	
L	15+93.73	-34.02	111440.2372	2256425.4361	
L	16+00.00	-52.00	111438.8105	2256444.3537	
L	16+20.00	-25.20	111413.2166	2256423.4252	
L	16+29.00	41.52	111386.5663	2256361.5941	BRIDGE SPIKE SET
L	16+40.00	62.00	111369.8744	2256345.0894	
L	17+20.00	52.54	111293.2382	2256380.2911	
L	17+53.00	-35.00	111293.4597	2256473.9196	
L	18+43.56	-51.71	111220.1192	2256524.6323	
L	18+49.97	-40.00	111209.2674	2256516.8554	
L	23+57.00	63.00	110708.3818	2256643.0465	
L	23+57.00	44.02	110716.3498	2256660.2674	
L	25+00.00	35.47	110590.3333	2256724.2410	
L	25+00.00	53.00	110583.7490	2256707.9944	
L	26+80.00	30.00	110425.6475	2256790.8780	
L	26+80.00	50.00	110419.5284	2256771.8371	

NOTES:

1. IF FURTHER INFORMATION REGARDING PROJECT CONTROL IS NEEDED PLEASE CONTACT THE LOCATION AND SURVEYS UNIT.

2. PROJECT CONTROL WAS ESTABLISHED USING GNSS, THE GLOBAL NAVIGATION SATELLITE SYSTEM.

REVISIONS

6/2/99

12-APR-2022 14:38
S:\Units\Div03\Projects\BRIDGE\Brunswick\B5311_2104\Working\150 Series Sheets\220407 revised row\17BP.3.R.80.ls_rw03e-1_rev.dgn
mjiwai

PROJECT REFERENCE NO.	SHEET NO.
17BP.3.R.80	RW04-REV#2

Location and Surveys

DIVISION 3
LOCATION AND SURVEY'S UNIT
5310 BARBADOS BLVD, SUITE 102
CASTLE HAYNE, NORTH CAROLINA 28429

PROJECT SURVEYOR

NORTH CAROLINA PROFESSIONAL SEAL L-4526 LAND SURVEYOR CHRISTOPHER J. SAWYER

DOCUMENT NOT CONSIDERED FINAL UNLESS ALL SIGNATURES COMPLETED

NAD 83/NA 2011

-L-		
PI Sta 16+50.63	PI Sta 24+83.23	PI Sta 30+60.27
△ = 17° 50' 27.9" (LT)	△ = 6° 34' 36.7" (RT)	△ = 37° 19' 08.6" (RT)
D = 4° 46' 28.7"	D = 1° 56' 08.4"	D = 4° 45' 00.0"
L = 373.66'	L = 339.77'	L = 785.66'
T = 188.36'	T = 170.07'	T = 407.34'
R = 1,200.00'	R = 2,960.00'	R = 1,206.23'
e = 0.08	e = 0.05	e = EXIST.
RO = 216'	RO = 135'	RO = EXIST.
DS = 60 mph	DS = 60 mph	DS = 60 mph

-L- (OLD ALIGNMENT)		
PI Sta 17+18.75	PI Sta 24+37.31	PI Sta 31+24.43
△ = 19° 51' 19.3" (LT)	△ = 8° 48' 40.3" (RT)	△ = 41° 56' 39.8" (RT)
D = 7° 33' 31.7"	D = 1° 56' 08.4"	D = 4° 46' 28.7"
L = 262.68'	L = 455.20'	L = 878.48'
T = 132.67'	T = 228.05'	T = 459.97'
R = 758.00'	R = 2,960.00'	R = 1,200.00'

-L- (OLD ALIGNMENT) IS FOR REFERENCE ONLY. SOME OF THE R/W WAS PURCHASED UNDER THIS ALIGNMENT BEFORE THE PROJECT WAS REDESIGNED. PLEASE SEE THE MONUMENTS WITH "**".

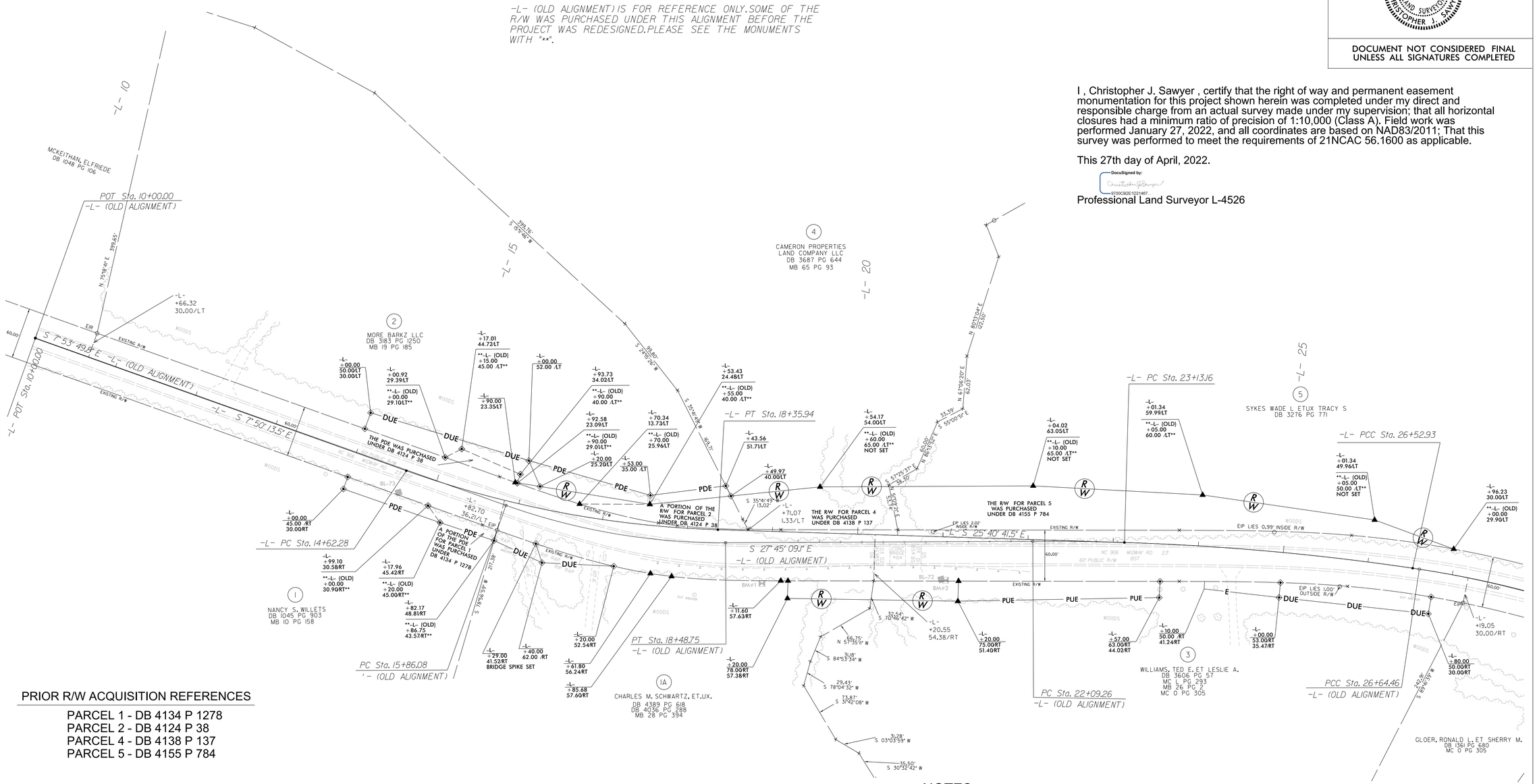

I , Christopher J. Sawyer , certify that the right of way and permanent easement monumentation for this project shown herein was completed under my direct and responsible charge from an actual survey made under my supervision; that all horizontal closures had a minimum ratio of precision of 1:10,000 (Class A). Field work was performed January 27, 2022, and all coordinates are based on NAD83/2011; That this survey was performed to meet the requirements of 21NCAC 56.1600 as applicable.

This 27th day of April, 2022.

DocuSigned by:
Christopher J. Sawyer
9700C82E1521467...

Professional Land Surveyor L-4526

PRIOR R/W ACQUISITION REFERENCES

PARCEL 1 - DB 4134 P 1278
PARCEL 2 - DB 4124 P 38
PARCEL 4 - DB 4138 P 137
PARCEL 5 - DB 4155 P 784

NOTES:

1. IF FURTHER INFORMATION REGARDING PROJECT CONTROL IS NEEDED PLEASE CONTACT THE LOCATION AND SURVEYS UNIT.

2. PROJECT CONTROL WAS ESTABLISHED USING GNSS, THE GLOBAL NAVIGATION SATELLITE SYSTEM.

REVISIONS

6/2/99

25-APR-2022 16:00
S:\Units\Divisions\Projects\BRIDGE\Brunswick\B5311.0104\Working\150 Series Sheets\220426 revised row\17BP.3.R.80_ls_rw04_rev.dgn
mjduval AT LS-299896

DocuSign Envelope ID: 2F4C833D-EBD4-461D-A38D-B55B91B8A05F

STATE OF NORTH CAROLINA
DIVISION OF HIGHWAYS

TRANSPORTATION MANAGEMENT PLAN

BRUNSWICK COUNTY

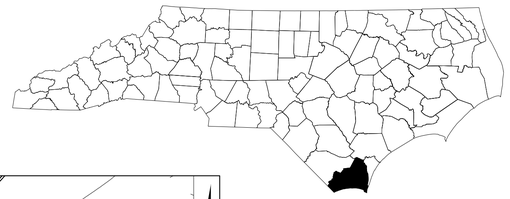

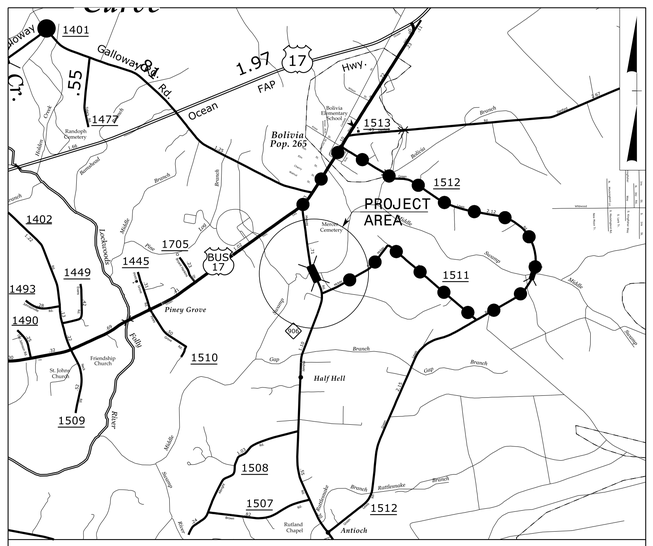

VICINITY MAP

DETOUR ROUTE ●—●—●—● N.T.S.

LOCATION: REPLACE BRIDGE 104 OVER MIDDLE SWAMP ON NC 906 (MIDWAY ROAD SE)

INDEX OF SHEETS

SHEET NO.	TITLE
TMP-1	TITLE SHEET, VICINITY MAP AND INDEX OF SHEETS
TMP-1A	LIST OF APPLICABLE ROADWAY STANDARD DRAWINGS, AND LEGEND
TMP-1B	TRANSPORTATION OPERATIONS PLAN: (MANAGEMENT STRATEGIES, GENERAL NOTES AND LOCAL NOTES)
TMP-2	OFF-SITE DETOUR

SHEET NO.
TMP-1

DOCUMENT NOT CONSIDERED FINAL UNLESS ALL SIGNATURES COMPLETED

WORK ZONE SAFETY & MOBILITY
"from the MOUNTAINS to the COAST"

PLANS PREPARED BY:

ADAM CONRAD, P.E.

RYAN DEMUYNCK, E.I.

NCDOT CONTACTS:

KEN THORNEWELL, P.E.
PROJECT ENGINEER

MIKE STEELMAN
PROJECT DESIGN ENGINEER

CDM Smith
CDM Smith Inc.
5400 Glenwood Avenue
Suite 400
Raleigh, NC 27612-3228
NC COA No. F-1255

DIVISION OF HIGHWAYS · STATE OF NORTH CAROLINA · DEPARTMENT OF TRANSPORTATION · WORK ZONE TRAFFIC CONTROL

APPROVED: DocuSigned by: Adam M. Conrad 0DDC0FFA6FD94AD...

DATE: 4/5/2022

SEAL

NORTH CAROLINA PROFESSIONAL SEAL 043767 ENGINEER ADAM M. CONRAD

PROJECT: 17BP.3.R.80

4/4/2022
Pw:\\cdm-smith-az02-pw.bentley.com:PW_PLN\Documents\117240\219637\10 Transportation\04 Client Folder Structure\B-5311\Traffic\TrafficControl\TCP\B531_TMP_TC01.dgn
User:CONRADAM

DocuSign Envelope ID: 2F4C833D-EBD4-461D-A38D-B55B91B8A05F

PROJ. REFERENCE NO.	SHEET NO.
17BP.3.R.80	TMP-1A

ROADWAY STANDARD DRAWINGS

THE FOLLOWING ROADWAY STANDARDS AS SHOWN IN "ROADWAY STANDARD DRAWINGS" - PROJECT SERVICES UNIT - N.C. DEPARTMENT OF TRANSPORTATION - RALEIGH, N.C., DATED JANUARY 2018 ARE APPLICABLE TO THIS PROJECT AND BY REFERENCE HEREBY ARE CONSIDERED A PART OF THESE PLANS:

STD. NO.	TITLE
1101.03	TEMPORARY ROAD CLOSURES
1101.11	TRAFFIC CONTROL DESIGN TABLES
1110.01	STATIONARY WORK ZONE SIGNS
1145.01	BARRICADES

LEGEND

GENERAL

- DIRECTION OF TRAFFIC FLOW
- DIRECTION OF PEDESTRIAN TRAFFIC FLOW
- EXIST. PVMT.
- NORTH ARROW
- PROPOSED PVMT.
- TEMP. SHORING (LOCATION PURPOSES ONLY)

SIGNALS

- EXISTING
- PROPOSED
- TEMPORARY

PAVEMENT MARKINGS

- EXISTING LINES
- TEMPORARY LINES

TRAFFIC CONTROL DEVICES

- BARRICADE (TYPE III)
- CONE
- DRUM
- SKINNY DRUM
- TUBULAR MARKER
- TEMPORARY CRASH CUSHION
- FLASHING ARROW BOARD
- FLAGGER
- LAW ENFORCEMENT
- TRUCK MOUNTED ATTENUATOR (TMA)
- CHANGEABLE MESSAGE SIGN

TEMPORARY SIGNING

- PORTABLE SIGN
- STATIONARY SIGN
- STATIONARY OR PORTABLE SIGN

PAVEMENT MARKERS

- CRYSTAL/CRYSTAL
- CRYSTAL/RED
- YELLOW/YELLOW

PAVEMENT MARKING SYMBOLS

- PAVEMENT MARKING SYMBOLS

APPROVED: Adam M. Conrad
DocuSigned by:
60DC0FFA0FD84AD...

DATE: 4/5/2022

SEAL

NORTH CAROLINA PROFESSIONAL SEAL 043767 ENGINEER ADAM M. CONRAD

DOCUMENT NOT CONSIDERED FINAL UNLESS ALL SIGNATURES COMPLETED

CDM Smith
CDM Smith Inc.
5400 Glenwood Avenue
Suite 400
Raleigh, NC 27612-3228
NC COA No. F-1255

DIVISION OF HIGHWAYS · STATE OF NORTH CAROLINA · DEPARTMENT OF TRANSPORTATION · WORK ZONE TRAFFIC CONTROL

ROADWAY STANDARD DRAWINGS & LEGEND

3/1/2022
pw:\\cdmsmith-az02-pw.bentley.com:PW_PLI\Documents\117240\219637\10 Transportation\04 Client Folder Structure\B-5311\Traffic\TrafficControl\TCP\B5311_TMP_TC01A.dgn
User:CONRADAM

DocuSign Envelope ID: EF9E4309-89CD-4518-AA28-5A4827618D33

PROJ. REFERENCE NO.	SHEET NO.
17BP.3.R.80	TMP-1B

MANAGEMENT STRATEGIES

1- CLOSE NC 906 (MIDWAY ROAD SE) TO TRAFFIC AND DETOUR TRAFFIC OFF-SITE.

2- LOCAL ACCESS TO ALL RESIDENCES AND BUSINESSES WILL BE MAINTAINED BETWEEN CLOSURE POINTS AT ALL TIMES DURING CONSTRUCTION.

GENERAL NOTES

CHANGES MAY BE REQUIRED WHEN PHYSICAL DIMENSIONS IN THE DETAIL DRAWINGS, STANDARD DETAILS, AND ROADWAY DETAILS ARE NOT ATTAINABLE TO MEET FIELD CONDITIONS OR RESULT IN DUPLICATE OR UNDESIRED OVERLAPPING OF DEVICES. MODIFICATION MAY INCLUDE: MOVING, SUPPLEMENTING, COVERING, OR REMOVAL OF DEVICES AS DIRECTED BY THE ENGINEER.

THE FOLLOWING GENERAL NOTES APPLY AT ALL TIMES FOR THE DURATION OF THE CONSTRUCTION PROJECT EXCEPT WHEN OTHERWISE NOTED IN THE PLAN OR DIRECTED BY THE ENGINEER.

TRAFFIC PATTERN ALTERATIONS

A) NOTIFY THE ENGINEER THIRTY (30) CALENDAR DAYS PRIOR TO ANY TRAFFIC PATTERN ALTERATION.

SIGNING

B) INSTALL ADVANCE WORK ZONE WARNING SIGNS WHEN WORK IS WITHIN 40 FT FROM THE EDGE OF TRAVEL LANE AND NO MORE THAN THREE (3) DAYS PRIOR TO THE BEGINNING OF CONSTRUCTION.

C) PROVIDE SIGNING AND DEVICES REQUIRED TO CLOSE THE ROAD ACCORDING TO THE ROADWAY STANDARD DRAWINGS AND TRAFFIC CONTROL PLANS.

PROVIDE SIGNING REQUIRED FOR THE OFF-SITE DETOUR ROUTE AS SHOWN IN THE TRAFFIC CONTROL PLANS.

D) COVER OR REMOVE ALL SIGNS AND DEVICES REQUIRED TO CLOSE THE ROAD WHEN ROAD CLOSURE IS NOT IN OPERATION.

COVER OR REMOVE ALL SIGNS REQUIRED FOR THE OFF-SITE DETOUR WHEN THE DETOUR IS NOT IN OPERATION.

E) ENSURE ALL NECESSARY SIGNING IS IN PLACE PRIOR TO ALTERING ANY TRAFFIC PATTERN.

TRAFFIC CONTROL DEVICES

F) PLACE TYPE III BARRICADES, WITH "ROAD CLOSED" SIGN R11-2 ATTACHED, OF SUFFICIENT LENGTH TO CLOSE ENTIRE ROADWAY.

PHASING

STEP 1: USING RSD 1101.03 (SHEET 1 OF 9), INSTALL DETOUR ROUTE SIGNING TO CLOSE NC 906 (MIDWAY ROAD SE) FROM STA. 14+00+/- TO STA. 26+80+/- -L-.

STEP 2: AWAY FROM TRAFFIC, COMPLETE CONSTRUCTION OF PROPOSED BRIDGE AND ROADWAY APPROACHES, INCLUDING DRAINAGE, GUARDRAIL, FINAL PAVEMENT MARKINGS AND MARKERS ON PROPOSED -L- FROM STA. 14+00+/- TO STA. 26+80+/-.

STEP 3: REMOVE TEMPORARY TRAFFIC CONTROL DEVICES AND OPEN -L- TO PROPOSED 2-LANE, 2-WAY TRAFFIC PATTERN.

LOCAL NOTES

1- NOTIFY BRUNSWICK COUNTY EMERGENCY SERVICES AND PUBLIC SCHOOLS AT LEAST ONE MONTH PRIOR TO ROAD CLOSURE.

CDM Smith
CDM Smith Inc.
5400 Glenwood Avenue
Suite 400
Raleigh, NC 27612-3228
NC COA No. F-1255

APPROVED: DocuSigned by: Adam M. Conrad 0DDC0FFA0FD94AD...

DATE: 4/20/2022

SEAL

NORTH CAROLINA PROFESSIONAL SEAL 043767 ENGINEER ADAM M. CONRAD

DOCUMENT NOT CONSIDERED FINAL UNLESS ALL SIGNATURES COMPLETED

DIVISION OF HIGHWAYS STATE OF NORTH CAROLINA DEPARTMENT OF TRANSPORTATION WORK ZONE TRAFFIC CONTROL

TRANSPORTATION OPERATIONS PLAN

4/20/2022
pw:\\cdmsmith-az02-pw.bentley.com:PW_PLN\Documents\117240\21963\10 Transportation\04 Client Folder Structure\B-5311\Traffic\TrafficControl\TCP\B5311_TMP_TC01B.dgn
User:CONRADAM

DocuSign Envelope ID: 2F4C833D-EBD4-461D-A38D-B55B91B8A05F

PROJ. REFERENCE NO.	SHEET NO.
17BP.3.R.80	TMP-2

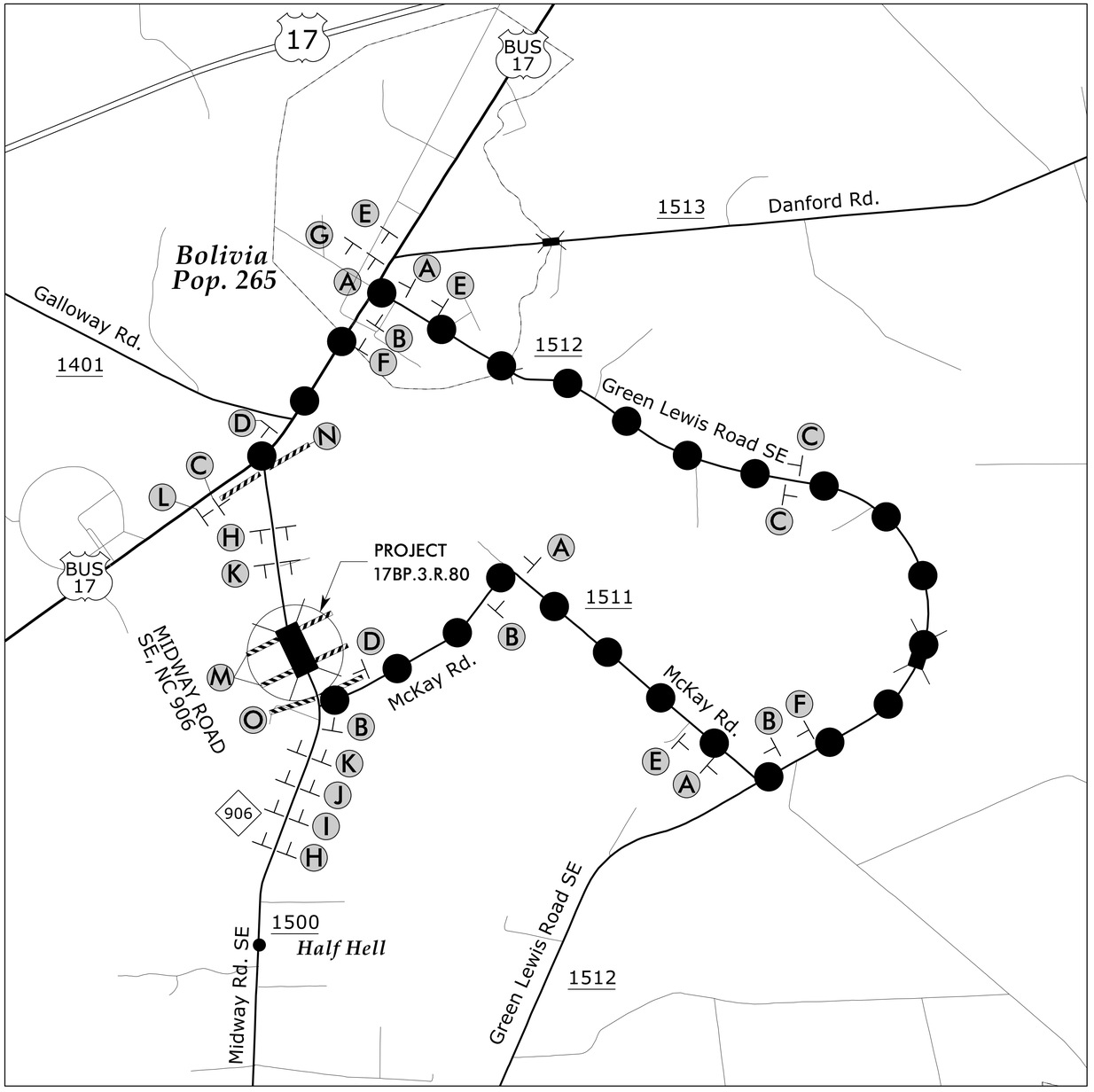

OFF-SITE DETOUR ROUTE

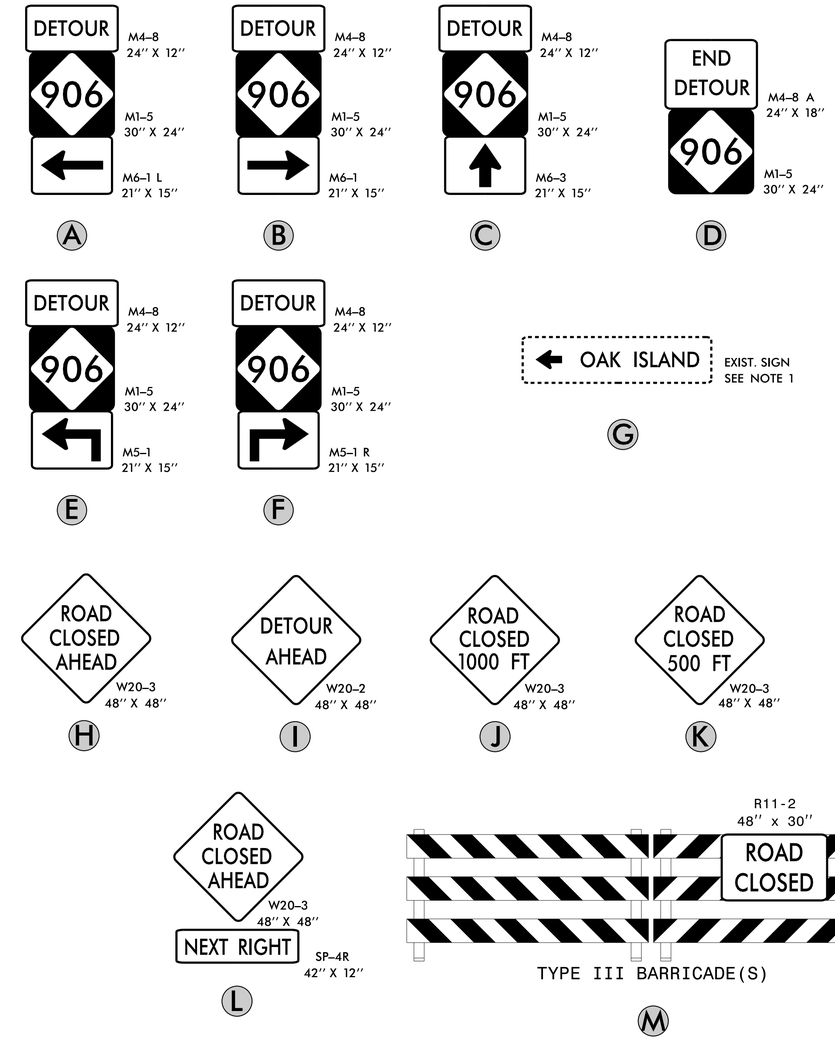

NOTES:
1) RELOCATE EXIST. OAK ISLAND (LEFT) SIGN FROM THE US-17/NC-906 INTERSECTION TO THE US-17/GREEN LEWIS ROAD SE INTERSECTION. MOVE THE EXIST. OAK ISLAND (LEFT) SIGN BACK TO IT'S ORIGINAL LOCATION ONCE CONSTRUCTION IS COMPLETE AND THE DETOUR IS REMOVED.

CDM Smith
CDM Smith Inc.
5400 Glenwood Avenue
Suite 400
Raleigh, NC 27612-3228
NC COA No. F-1255

APPROVED: DocuSigned by: Adam M. Conrad
0DDC0FFA0FD94AD...
DATE: 4/5/2022
SEAL
NORTH CAROLINA PROFESSIONAL SEAL 043767 ENGINEER ADAM M. CONRAD

DOCUMENT NOT CONSIDERED FINAL
UNLESS ALL SIGNATURES COMPLETED

DIVISION OF HIGHWAYS
STATE OF NORTH CAROLINA
DEPARTMENT OF TRANSPORTATION
WORK ZONE TRAFFIC CONTROL

OFF-SITE DETOUR

4/4/2022
pw:\\cdmsmith-az02-pw.bentley.com:PW_PL\Documents\117240\219637\10 Transportation\04 Client Folder Structure\B-5311\Traffic\TrafficControl\TCP\B5311_TMP_TC02.dgn
User:CONRADAM

DocuSign Envelope ID: EF9E4309-89CD-4518-AA28-5A4827618D33

PROJECT: 17BP.3.R.80

TIP NO.	SHEET NO.
17BP.3.R.80	PMP-1

APPROVED: Adam M. Conrad
DATE: 4/20/2022

SEAL

NORTH CAROLINA PROFESSIONAL SEAL 043767 ENGINEER ADAM M. CONRAD

DOCUMENT NOT CONSIDERED FINAL UNLESS ALL SIGNATURES COMPLETED

CDM Smith
CDM Smith Inc.
5400 Glenwood Avenue
Suite 400
Raleigh, NC 27612-3228
NC COA No. F-1255

STATE OF NORTH CAROLINA
DEPARTMENT OF TRANSPORTATION

PAVEMENT MARKING PLAN
BRUNSWICK COUNTY
LOCATION: NC 906 (MIDWAY ROAD SE) OVER MIDDLE SWAMP

ROADWAY STANDARD DRAWING

THE FOLLOWING ROADWAY STANDARDS AS APPEAR IN "ROADWAY STANDARD DRAWINGS" - PROJECT SERVICES UNIT - N.C. DEPARTMENT OF TRANSPORTATION - RALEIGH, N.C., DATED JANUARY 2018 ARE APPLICABLE TO THIS PROJECT AND BY REFERENCE HEREBY ARE CONSIDERED A PART OF THESE PLANS:

STD. NO.	TITLE
1205.01	PAVEMENT MARKINGS - LINE TYPES AND OFFSETS
1205.02	PAVEMENT MARKINGS - TWO-LANE AND MULTILANE ROADWAYS
1205.12	PAVEMENT MARKINGS - BRIDGES
1250.01	RAISED PAVEMENT MARKERS - INSTALLATION SPACING
1251.01	RAISED PAVEMENT MARKERS - PERMANENT AND TEMPORARY
1253.01	RAISED PAVEMENT MARKERS - SNOWPLOWABLE
1261.01	GUARDRAIL AND BARRIER DELINEATORS - INSTALLATION SPACING
1261.02	GUARDRAIL AND BARRIER DELINEATORS - TYPES AND MOUNTING
1262.01	GUARDRAIL END DELINEATION

SUMMARY OF QUANTITIES

ITEM NO. DESC. NO.	ITEM NO. SECT. NO.	ITEM DESCRIPTION	QUANTITY	UNIT
4685000000-E	1205	THERMOPLASTIC PAVEMENT MARKING LINES (4", 90 MILS)	4,260	L.F.
4847010000-E	1205	POLYUREA PAVEMENT MARKING LINES (4", 20 MILS)	660	L.F.
4895000000-N	SP	NON-CAST IRON SNOWPLOWABLE MARKERS (GENERIC)	15	EA.
4900000000-N	1251	PERMANENT RAISED PAVEMENT MARKERS	2	EA.

GENERAL NOTES

THE FOLLOWING GENERAL NOTES APPLY AT ALL TIMES FOR THE DURATION OF THE CONSTRUCTION PROJECT, EXCEPT WHEN OTHERWISE NOTED IN THE PLAN, OR DIRECTED BY THE ENGINEER.

A) INSTALL PAVEMENT MARKINGS AND PAVEMENT MARKERS ON THE FINAL SURFACE AS FOLLOWS:

ROAD NAME	MARKING	MARKER
MIDWAY ROAD SE	THERMOPLASTIC	SNOWPLOWABLE
MIDWAY ROAD SE (BRIDGE)	POLYUREA	PERMANENT RAISED

B) TIE PROPOSED PAVEMENT MARKING LINES TO EXISTING PAVEMENT MARKING LINES.

C) REMOVE/REPLACE ANY CONFLICTING/DAMAGED PAVEMENT MARKINGS AND MARKERS.

D) PASSING ZONES WILL BE DETERMINED IN THE FIELD AND MUST BE APPROVED BY THE ENGINEER.

E) REMOVE ALL SURFACE LAITANCE BY ACCEPTABLE METHODS ON CONCRETE BRIDGE DECKS PRIOR TO PLACING POLYUREA MARKING MATERIAL.

INDEX

SHEET NO.	DESCRIPTION
PMP-1	PAVEMENT MARKING PLAN TITLE SHEET
PMP-2	PAVEMENT MARKING DETAIL

PLAN PREPARED BY: CDM SMITH, INC.

DAVID Z. KEISER, P. E. — PROJECT MANAGER
ADAM M. CONRAD, P. E. — PROJECT DESIGN ENGINEER

CDM Smith
CDM Smith Inc.
5400 Glenwood Avenue
Suite 400
Raleigh, NC 27612-3228
NC COA No. F-1255

PLAN REVIEWED BY: N.C.D.O.T. DIVISION 3

JESSI LEONARD, P.E. — DIVISION TRAFFIC ENGINEER
ANTHONY W. LAW — DIVISION CONSTRUCTION ENGINEER

$$$$$SYSTIME$$$$
$$$$$USERNAME$$$$

DocuSign Envelope ID: EF9E4309-89CD-4518-AA28-5A4827618D33

TIP NO.	SHEET NO.
17BP.3.R.80	PMP-2

APPROVED: Adam M. Conrad (DocuSigned by: 0DDC0FFA0FD94AD...)

DATE: 4/20/2022

SEAL

NORTH CAROLINA PROFESSIONAL SEAL 043767 ENGINEER ADAM M. CONRAD

DOCUMENT NOT CONSIDERED FINAL UNLESS ALL SIGNATURES COMPLETED

CDM Smith
CDM Smith Inc.
5400 Glenwood Avenue
Suite 400
Raleigh, NC 27612-3228
NC COA No. F-1255

PAVEMENT MARKING SCHEDULE

SYMBOL	DESCRIPTION
THERMOPLASTIC (4", 90 MILS)	
T1	WHITE EDGELINE
T13	YELLOW DOUBLE CENTER
POLYUREA (4", 20 MILS)	
V1	WHITE EDGELINE
V13	YELLOW DOUBLE CENTER
PERMANENT RAISED PAVEMENT MARKERS	
MA	YELLOW & YELLOW
NON-CAST IRON SNOWPLOWABLE MARKERS	
ME	YELLOW & YELLOW

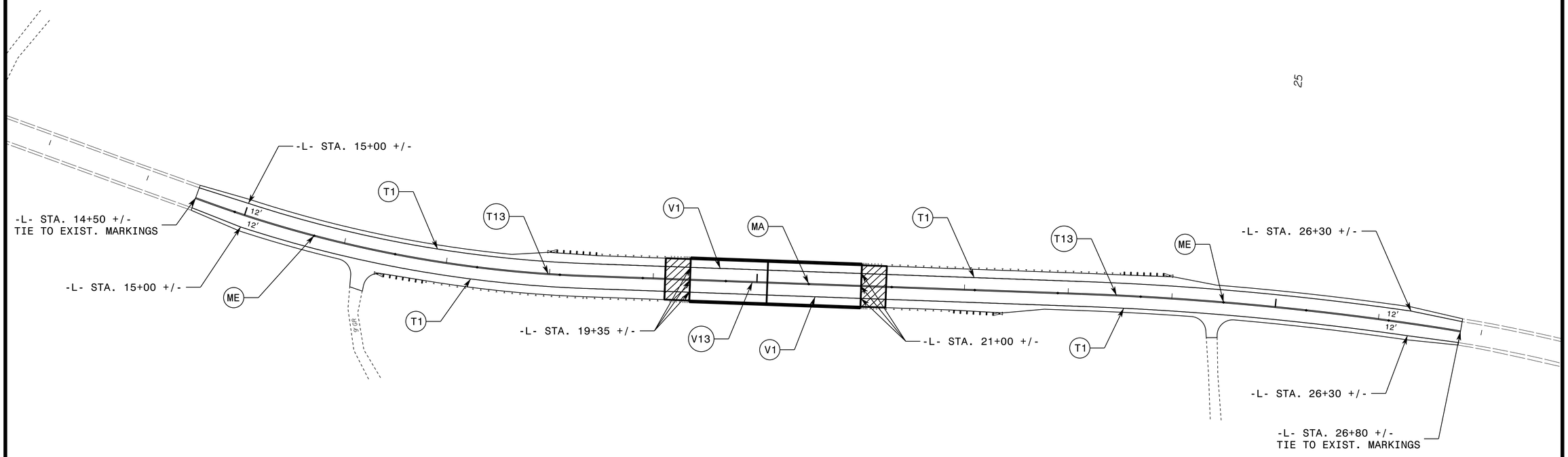

PAVEMENT MARKING DETAIL

TIP PROJECT: 17BP.3.R.80

STATE	STATE PROJECT REFERENCE NO.	SHEET NO.	TOTAL SHEETS
N.C.	17BP.3.R.80	EC-1	

STATE PROJ. NO.	F.A. PROJ. NO.	DESCRIPTION

See Sheet 1-A For Index of Sheets
See Sheet 1-B For Conventional Symbols

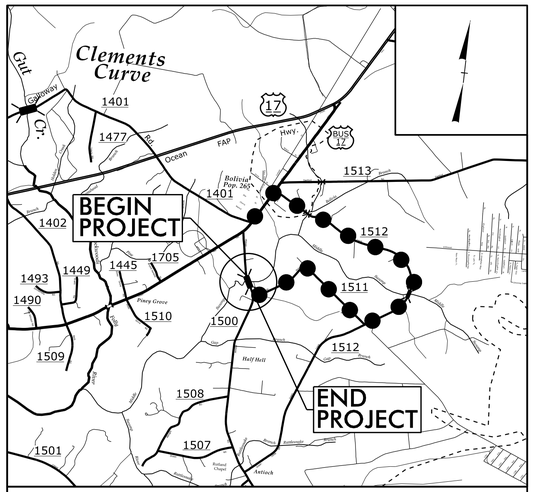

VICINITY MAP

DETOUR ROUTE

N.T.S.

STATE OF NORTH CAROLINA
DIVISION OF HIGHWAYS

PLAN FOR PROPOSED
HIGHWAY EROSION CONTROL

BRUNSWICK COUNTY

LOCATION: REPLACE BRIDGE 104 OVER MIDDLE SWAMP ON NC 906 (MIDWAY ROAD SE)

TYPE OF WORK: GRADING, DRAINAGE, PAVING, SIGNING AND STRUCTURE

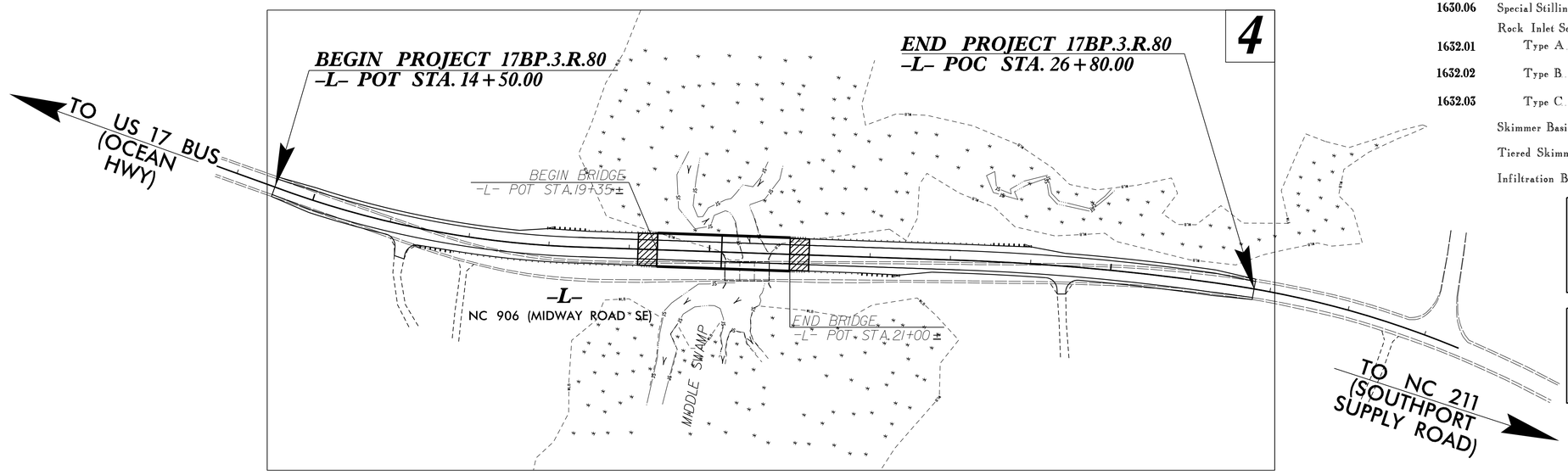

EROSION AND SEDIMENT CONTROL MEASURES

Std. #	Description	Symbol
1630.03	Temporary Silt Ditch	TSD
1630.05	Temporary Diversion	TD
1605.01	Temporary Silt Fence	
1606.01	Special Sediment Control Fence	
1622.01	Temporary Berms and Slope Drains	
1630.02	Silt Basin Type B	
1633.01	Temporary Rock Silt Check Type-A	
	Temporary Rock Silt Check Type-A with Matting and Polyacrylamide (PAM)	
1633.02	Temporary Rock Silt Check Type-B	
	Wattle/ Coir Fiber Wattle	EW CFW
	Wattle/ Coir Fiber Wattle with Polyacrylamide (PAM)	
1634.01	Temporary Rock Sediment Dam Type-A	
1634.02	Temporary Rock Sediment Dam Type-B	
1635.01	Rock Pipe Inlet Sediment Trap Type-A	
1635.02	Rock Pipe Inlet Sediment Trap Type-B	
1630.04	Stilling Basin	
1630.06	Special Stilling Basin	
	Rock Inlet Sediment Trap:	
1632.01	Type A	A
1632.02	Type B	B
1632.03	Type C	C
	Skimmer Basin	
	Tiered Skimmer Basin	
	Infiltration Basin	

THIS PROJECT CONTAINS EROSION CONTROL PLANS FOR CLEARING AND GRUBBING PHASE OF CONSTRUCTION.

THE OUSIDE BUFFER, WETLAND, OR WATER BOUNDARY SHALL BE CLEARLY MARKED BY HIGHLY VISIBLE FENCING (ORANGE SAFETY FENCE).

GRAPHIC SCALE

50 25 0 50 100

PLANS

THESE EROSION AND SEDIMENT CONTROL PLANS COMPLY WITH THE APPLICABLE REGULATIONS SET FORTH BY THE NCG-010000 GENERAL CONSTRUCTION PERMIT EFFECTIVE APRIL 1, 2019 AND ISSUED BY THE NORTH CAROLINA DEPARTMENT OF ENVIRONMENTAL QUALITY DIVISION OF WATER RESOURCES.

SUMMIT
DESIGN AND ENGINEERING SERVICES
FIRM NO. P-0339

Prepared in the Office of:
320 Executive Ct.
Hillsborough, NC 27278-8551
Voice: (919)732-3883
Fax: (919)732-6776
www.summitde.net

Designed by:

HE YANG — *NAME*
4408 — *LEVEL III CERTIFICATION NO.*

Roadway Standard Drawings

The following roadway english standards as appear in "Roadway Standard Drawings"- Roadway Design Unit - N. C. Department of Transportation - Raleigh, N. C., dated January 2018 and the latest revison thereto are applicable to this project and by reference hereby are considered a part of these plans.

1604.01	Railroad Erosion Control Detail	1632.01	Rock Inlet Sediment Trap Type A
1605.01	Temporary Silt Fence	1632.02	Rock Inlet Sediment Trap Type B
1606.01	Special Sediment Control Fence	1632.03	Rock Inlet Sediment Trap Type C
1607.01	Gravel Construction Entrance	1633.01	Temporary Rock Silt Check Type A
1622.01	Temporary Berms and Slope Drains	1633.02	Temporary Rock Silt Check Type B
1630.01	Riser Basin	1634.01	Temporary Rock Sediment Dam Type A
1630.02	Silt Basin Type B	1634.02	Temporary Rock Sediment Dam Type B
1630.03	Temporary Silt Ditch	1635.01	Rock Pipe Inlet Sediment Trap Type A
1630.04	Stilling Basin	1635.02	Rock Pipe Inlet Sediment Trap Type B
1630.05	Temporary Diversion	1640.01	Coir Fiber Baffle
1630.06	Special Stilling Basin	1645.01	Temporary Stream Crossing
1631.01	Matting Installation		

16-JUN-2022 09:12
B-5311-EC_dsn_tsh.dgn
hegyang

PROJECT REFERENCE NO.	SHEET NO.
17BP.3.R.80	EC-2
R/W SHEET NO.	
ROADWAY DESIGN ENGINEER	HYDRAULICS ENGINEER

CDM Smith
CDM Smith Inc
5400 Glenwood Avenue
Suite 400
Raleigh, NC 27612-3228
NC COA No. F-1255

SUMMIT
Summit Design and Engineering Services
504 Meadowland Drive
Hillsborough, NC 27278
NC FIRM LICENSE No: P-0339

COIR FIBER WATTLE WITH POLYACRYLAMIDE (PAM) DETAIL

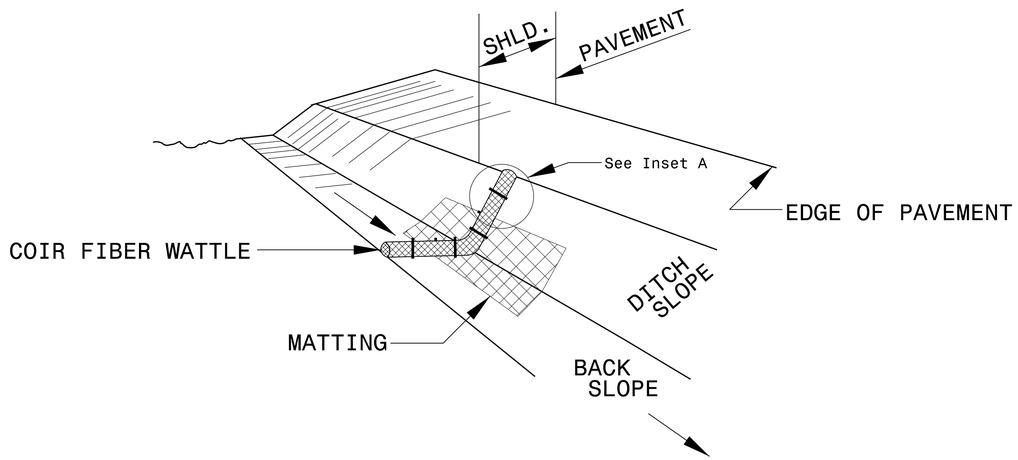

ISOMETRIC VIEW

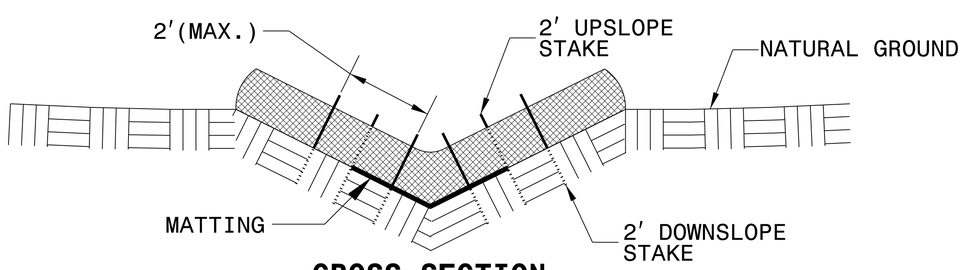

CROSS SECTION VEE DITCH

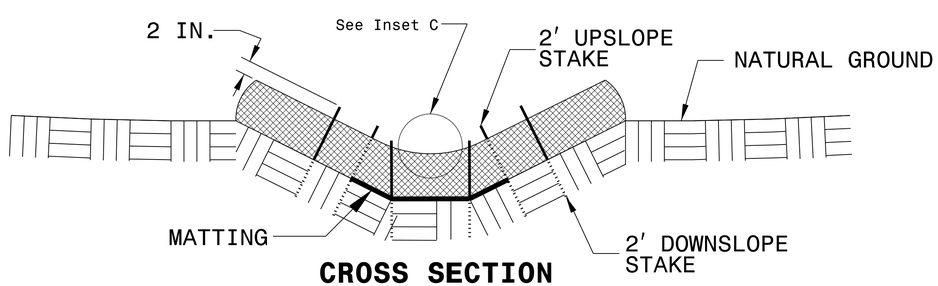

CROSS SECTION TRAPEZOIDAL DITCH

NOTES:

USE MINIMUM 12 IN. DIAMETER COIR FIBER (COCONUT FIBER) WATTLE.

USE 2 FT. WOODEN STAKES WITH A 2 IN. BY 2 IN. NOMINAL CROSS SECTION.

ONLY INSTALL WATTLE(S) TO A HEIGHT IN DITCH SO FLOW WILL NOT WASH AROUND WATTLE AND SCOUR DITCH SLOPES AND AS DIRECTED.

INSTALL A MINIMUM OF 2 UPSLOPE STAKES AND 4 DOWNSLOPE STAKES AT AN ANGLE TO WEDGE WATTLE TO BOTTOM OF DITCH.

PROVIDE STAPLES MADE OF 0.125 IN. DIAMETER STEEL WIRE FORMED INTO A U SHAPE NOT LESS THAN 12" IN LENGTH.

INSTALL STAPLES APPROXIMATELY EVERY 1 LINEAR FOOT ON BOTH SIDES OF WATTLE AND AT EACH END TO SECURE IT TO THE SOIL.

INSTALL MATTING IN ACCORDANCE WITH SECTION 1631 OF THE STANDARD SPECIFICATIONS.

PRIOR TO POLYACRYLAMIDE (PAM) APPLICATION, OBTAIN A SOIL SAMPLE FROM PROJECT LOCATION, AND FROM OFFSITE MATERIAL, AND ANALYZE FOR APPROPRIATE PAM FLOCCULANT TO BE APPLIED TO EACH WATTLE.

INITIALLY APPLY 2 OUNCES OF ANIONIC OR NEUTRALLY CHARGED PAM OVER WATTLE WHERE WATER WILL FLOW AND 1 OUNCE OF PAM ON MATTING ON EACH SIDE OF WATTLE. REAPPLY PAM AFTER EVERY RAINFALL EVENT THAT IS EQUAL TO OR EXCEEDS 0.50 IN.

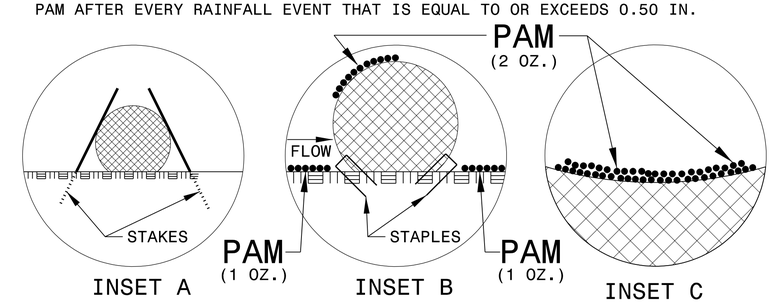

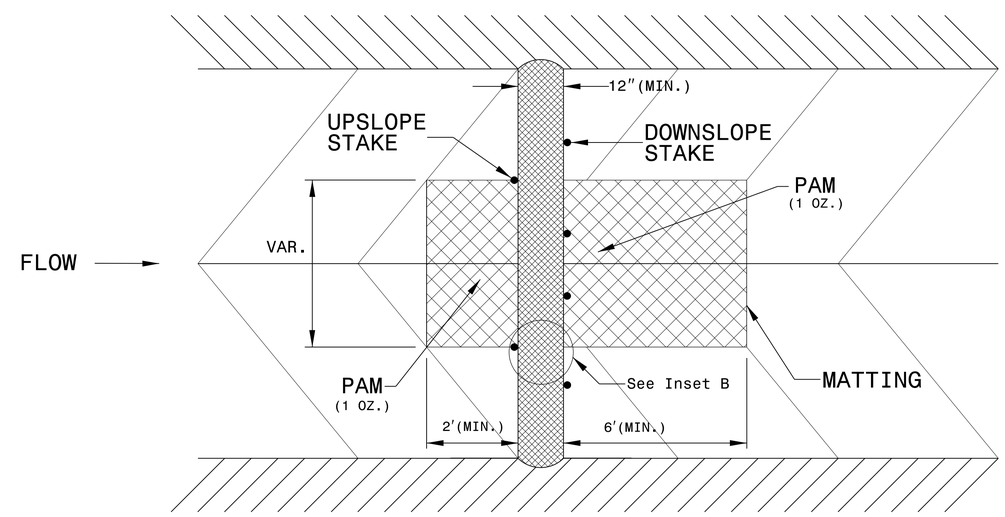

TOP VIEW

SILT FENCE COIR FIBER WATTLE BREAK DETAIL

PROJECT REFERENCE NO.	SHEET NO.
17BP.3.R.80	EC-2A
R/W SHEET NO.	___
ROADWAY DESIGN ENGINEER	HYDRAULICS ENGINEER

CDM Smith
CDM Smith Inc.
5400 Glenwood Avenue
Suite 400
Raleigh, NC. 27612-3228
NC COA No. F-1255

SUMMIT
Summit Design and Engineering Services
324 Meadowland Drive
Hillsborough, NC 27278
NC FIRM LICENSE No: P-0339

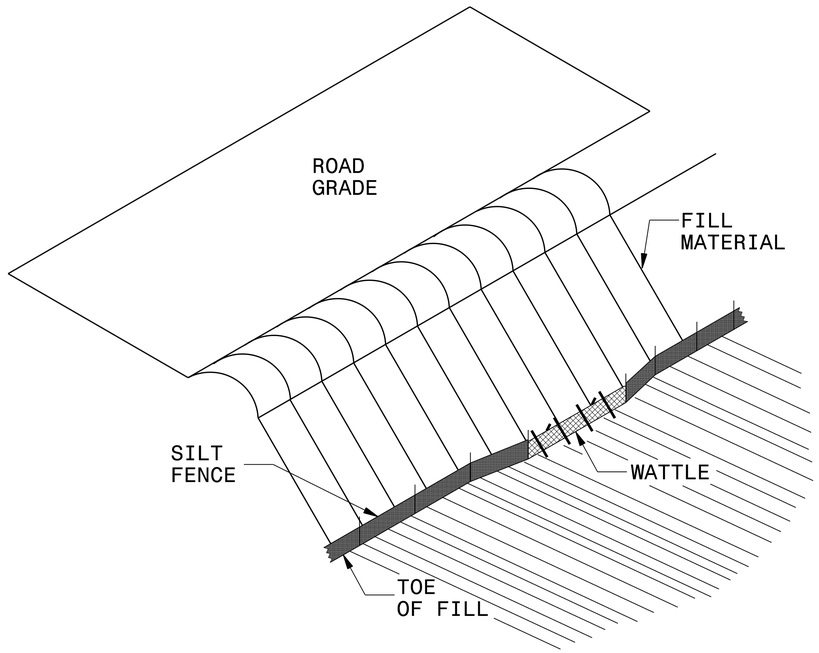

ISOMETRIC VIEW

NOTES:

USE MINIMUM 12 IN. DIAMETER COIR FIBER (COCONUT FIBER) WATTLE AND LENGTH OF 10 FT.

EXCAVATE A 1 TO 2 INCH TRENCH FOR WATTLE TO BE PLACED.

DO NOT PLACE WATTLE ON TOE OF SLOPE.

USE 2 FT. WOODEN STAKES WITH A 2 IN. BY 2 IN. NOMINAL CROSS SECTION.

INSTALL A MINIMUM OF 2 UPSLOPE STAKES AND 4 DOWNSLOPE STAKES AT AN ANGLE TO WEDGE WATTLE TO GROUND.

PROVIDE STAPLES MADE OF 0.125 IN. DIAMETER STEEL WIRE FORMED INTO A U SHAPE NOT LESS THAN 12″ IN LENGTH.

INSTALL STAPLES APPROXIMATELY EVERY 1 LINEAR FOOT ON BOTH SIDES OF WATTLE AND AT EACH END TO SECURE IT TO THE SOIL.

WATTLE INSTALLATION CAN BE ON OUTSIDE OF THE SILT FENCE AS DIRECTED.

INSTALL TEMPORARY SILT FENCE IN ACCORDANCE WITH SECTION 1605 OF THE STANDARD SPECIFICATIONS.

INSET A

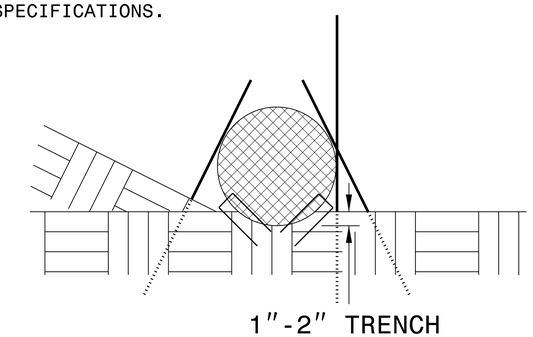

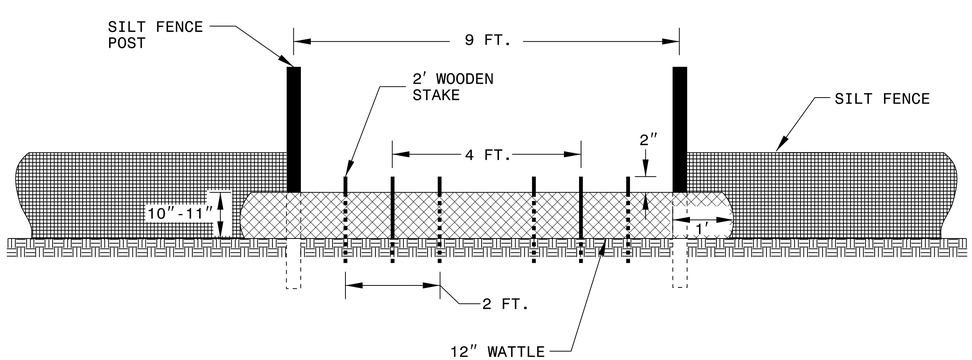

VIEW FROM SLOPE

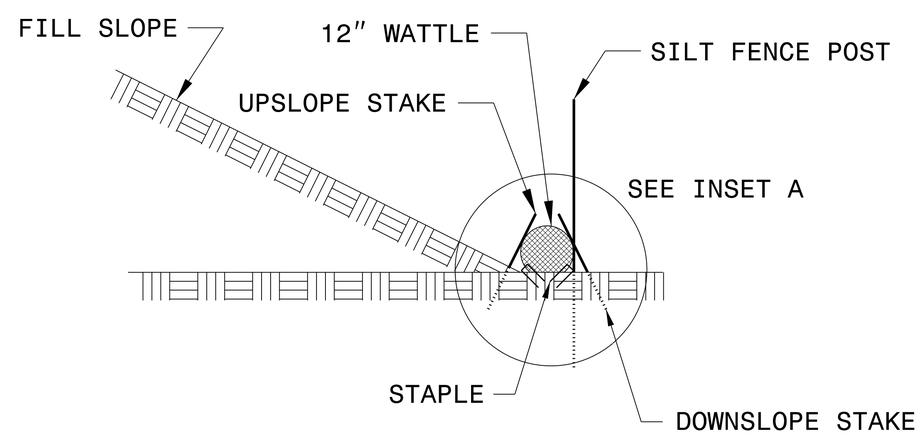

SIDE VIEW

PROJECT REFERENCE NO.	SHEET NO.
17BP.3.R.80	EC-3
ROADWAY DESIGN ENGINEER	HYDRAULICS ENGINEER

CDM Smith
CDM Smith Inc
5400 Glenwood Avenue
Suite 400
Raleigh, NC 27612-3228
NC COA No. F-1255

SUMMIT
Summit Design and Engineering Services
504 Meadowland Drive
Hillsborough, NC 27278
NC FIRM LICENSE No: P-0339

DIVISION OF HIGHWAYS
STATE OF NORTH CAROLINA

SOIL STABILIZATION TIMEFRAMES

SITE DESCRIPTION	STABILIZATION TIME	TIMEFRAME EXCEPTIONS
PERIMETER DIKES, SWALES, DITCHES AND SLOPES	7 DAYS	NONE
HIGH QUALITY WATER (HQW) ZONES	7 DAYS	NONE
SLOPES STEEPER THAN 3:1	7 DAYS	IF SLOPES ARE 10' OR LESS IN LENGTH AND ARE NOT STEEPER THAN 2:1, 14 DAYS ARE ALLOWED.
SLOPES 3:1 OR FLATTER	14 DAYS	7 DAYS FOR SLOPES GREATER THAN 50' IN LENGTH.
ALL OTHER AREAS WITH SLOPES FLATTER THAN 4:1	14 DAYS	NONE, EXCEPT FOR PERIMETERS AND HQW ZONES.

PROJECT REFERENCE NO.	SHEET NO.
17BP.3.R.80	EC-3A
ROADWAY DESIGN ENGINEER	HYDRAULICS ENGINEER

CDM Smith
CDM Smith Inc.
5400 Glenwood Avenue
Suite 400
Raleigh, NC 27612-3228
NC COA No. F-1255

SUMMIT
Summit Design and Engineering Services
504 Meadowland Drive
Hillsborough, NC 27278
NC FIRM LICENSE No: P-0339

DIVISION OF HIGHWAYS
STATE OF NORTH CAROLINA

SOIL STABILIZATION SUMMARY SHEET

COIR FIBER MATTING FOR FILL SLOPES

CONST SHEET NO.	LINE	FROM STATION	TO STATION	SIDE	ESTIMATE (SY)
4	-L-	19+00	19+35	LT	77
4	-L-	21+00	23+00	LT	487
		FILL SLOPE		TOTAL	564

COIR FIBER MATTING FOR CUT DITCHES

CONST SHEET NO.	LINE	FROM STATION	TO STATION	SIDE	ESTIMATE (SY)
4	-L-	14+00	16+00	LT	280
4	-L-	14+00	15+50	RT	210
4	-L-	15+50	16+75	RT	205
4	-L-	25+00	26+80	RT	220
			CUT DITCH	TOTAL	915
			FILL SLOPE	TOTAL	564
			SUBTOTAL		1479
	MISC. MATTING TO BE INSTALLED AS DIRECTED BY THE ENGINEER				1570
				TOTAL	3049
				SAY	3100

PROJECT REFERENCE NO.	SHEET NO.
17BP.3.R.80	EC-4/CONST.4
R/W SHEET NO.	
ROADWAY DESIGN ENGINEER	HYDRAULICS ENGINEER

CDM Smith — CDM Smith Inc. 5400 Glenwood Avenue Suite 400 Raleigh, NC 27612-3228 NC COA No. F-1250

SUMMIT — Summit Design and Engineering Services 504 Meadowland Drive Hillsborough, NC 27278 NC FIRM LICENSE No: P-0339

NOTE:
UTILIZE FLOATING TURBIDITY CURTAIN AS DIRECTED

NOTE:
PLACE TEMPORARY ROCK SEDIMENT DAMS TYPE – B AND TEMPORARY ROCK SILT CHECKS TYPE – A AT DRAINAGE OUTLETS.

NOTE:
PERIMETER EROSION CONTROL MEASURES SHALL BE INSTALLED DURING CLEARING AND GRUBBING PHASE.

CLEARING AND GRUBBING
EROSION CONTROL FOR
CONSTRUCTION SHEET 4

NOTE:
UTILIZE TEMPORARY SEDIMENT BASIN OR SPECIAL STILLING BASIN(S) AS STILLING BASIN WHERE APPLICABLE.

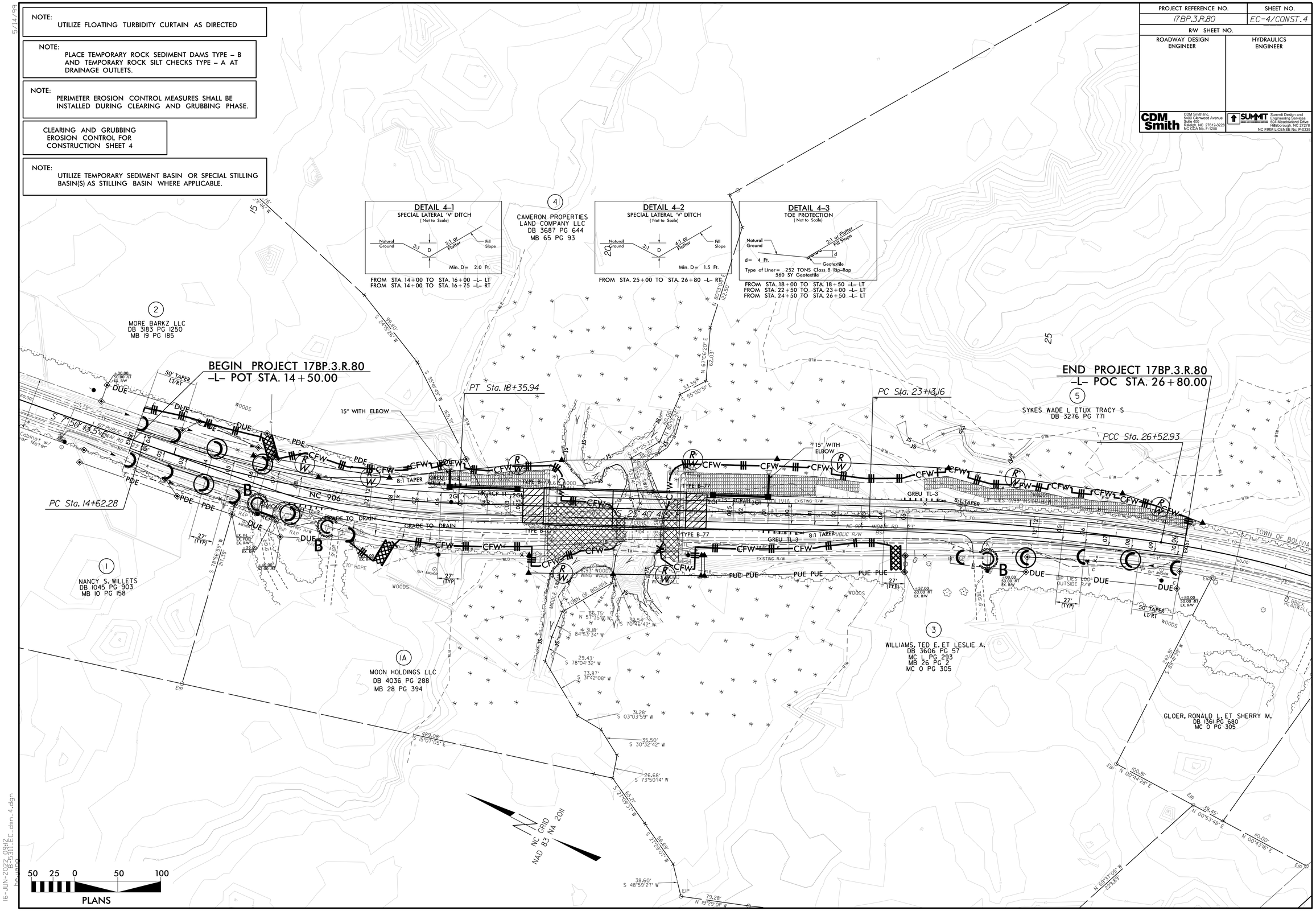

16-JUN-2022 09:12
R:\25311EC_dgn_4.dgn
hewpro

PROJECT REFERENCE NO.	SHEET NO.
17BP.3.R.80	EC-5/CONST.4
R/W SHEET NO.	
ROADWAY DESIGN ENGINEER	HYDRAULICS ENGINEER

CDM Smith — CDM Smith Inc. 5400 Glenwood Avenue Suite 400 Raleigh, NC 27612-3228 NC COA No. F-1250

SUMMIT — Summit Design and Engineering Services 504 Meadowland Drive Hillsborough, NC 27278 NC FIRM LICENSE No: P-0339

UTILIZE FLOATING TURBIDITY CURTAIN AS DIRECTED

NOTE: UTILIZE COIR FIBER MATTING ADJACENT TO WETLANDS/ JURISDICTIONAL AREAS, AND AS DIRECTED

NOTE: UTILIZE TEMPORARY SEDIMENT BASIN OR SPECIAL STILLING BASIN(S) AS STILLING BASIN WHERE APPLICABLE.

INSTALL MATTING FOR EROSION CONTROL IN ALL PROPOSED DETAIL DITCHES.

DETAIL 4–1
SPECIAL LATERAL 'V' DITCH
(Not to Scale)

Natural Ground — 3:1 — D — 3:1 or Flatter — Fill Slope

Min. D= 2.0 Ft.

FROM STA. 14+00 TO STA. 16+00 –L– LT
FROM STA. 14+00 TO STA. 16+75 –L– RT

DETAIL 4–2
SPECIAL LATERAL 'V' DITCH
(Not to Scale)

Natural Ground — 3:1 — D — 4:1 or Flatter — Fill Slope

Min. D= 1.5 Ft.

FROM STA. 25+00 TO STA. 26+80 –L– RT

DETAIL 4–3
TOE PROTECTION
(Not to Scale)

Natural Ground — 2:1 or Flatter — Fill Slope — d — Geotextile

d= 4 Ft.
Type of Liner= 252 TONS Class B Rip-Rap
560 SY Geotextile

FROM STA. 18+00 TO STA. 18+50 –L– LT
FROM STA. 22+50 TO STA. 23+00 –L– LT
FROM STA. 24+50 TO STA. 26+50 –L– LT

BEGIN PROJECT 17BP.3.R.80
–L– POT STA. 14+50.00

END PROJECT 17BP.3.R.80
–L– POC STA. 26+80.00

PC Sta. 14+62.28
PT Sta. 18+35.94
PC Sta. 23+13.16
PCC Sta. 26+52.93

(1) NANCY S. WILLETS
DB 1045 PG 903
MB 10 PG 158

(1A) MOON HOLDINGS LLC
DB 4036 PG 288
MB 28 PG 394

(2) MORE BARKZ LLC
DB 3183 PG 1250
MB 19 PG 185

(3) WILLIAMS, TED E. ET LESLIE A.
DB 3606 PG 57
MC L PG 293
MB 26 PG 2
MC O PG 305

(4) CAMERON PROPERTIES LAND COMPANY LLC
DB 3687 PG 644
MB 65 PG 93

(5) SYKES WADE L ETUX TRACY S
DB 3276 PG 771

GLOER, RONALD L. ET SHERRY M.
DB 1361 PG 680
MC O PG 305

NC 906 — TOWN OF BOLIVIA — MIDDLE SCHOOL RD — WOODS — GRADE TO DRAIN — 15" WITH ELBOW — 50' TAPER LT/RT — 8:1 TAPER — GREU TL-3 — TYPE B-77 — 18" RCP III — 10" HDPE — 25' 40' 41" — 8.55' WOOD WING WALL — PUE — DUE — CFW — PDE — EIP — EXISTING R/W — PUBLIC R/W

NC GRID NAD 83 NA 2011

50 25 0 50 100
PLANS

16-JUN-2022 09:12
hbu0109
17BP.3.R.80_sht311ec_dsn_5.dgn

T.I.P. NO.	SHEET NO.
17BP.3.R.80	UO–1

NOTE:
ALL UTILITY WORK SHOWN ON THIS SHEET WILL BE DONE BY OTHERS. NO PAYMENT WILL BE MADE TO THE CONTRACTOR FOR UTILITY WORK SHOWN ON THIS SHEET.

STATE OF NORTH CAROLINA
DIVISION OF HIGHWAYS

UTILITIES BY OTHERS PLANS
BRUNSWICK COUNTY

LOCATION: REPLACE BRIDGE 104 OVER MIDDLE SWAMP ON NC 906 (MIDWAY ROAD SE)

TYPE OF WORK: RELOCATION OF POWER AND COMMUNICATION

See Sheet IA For Index of Sheets
See Sheet IB For Conventional Symbols

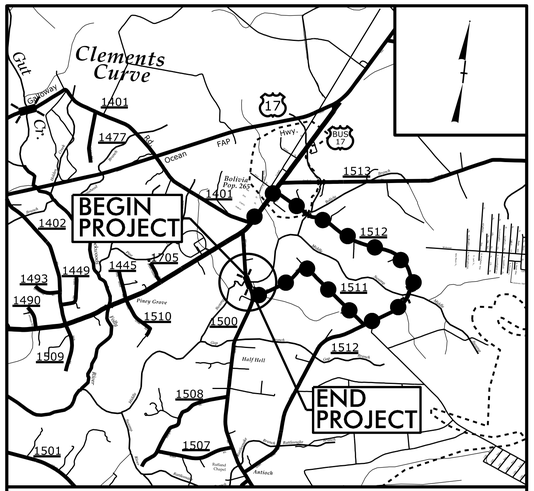

VICINITY MAP

DETOUR ROUTE

N.T.S.

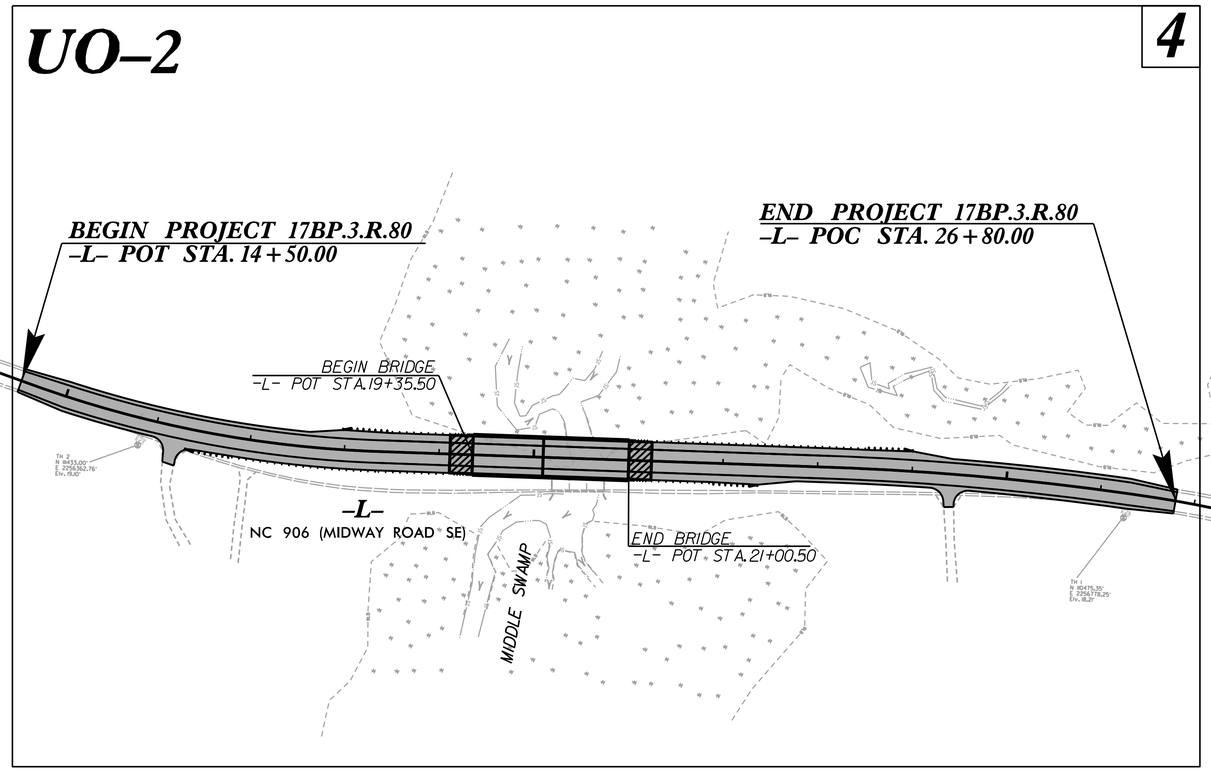

GRAPHIC SCALES

50 25 0 50 100
PLANS

50 25 0 50 100
PROFILE (HORIZONTAL)

10 5 0 10 20
PROFILE (VERTICAL)

INDEX OF SHEETS

SHEET NO.:	DESCRIPTION:
UO–1	TITLE SHEET
UO–2	UBO PLAN SHEET

UTILITY OWNERS WITH CONFLICTS

(A) POWER – BRUNSWICK EMC
(B) COMMUNICATIONS – ATMC

PREPARED IN THE OFFICE OF:

SAM
2641 Sumner Boulevard
Suite 116
Raleigh, NC 27616
(919) 878–7466

Scott Williford	UTILITY PROJECT MANAGER
Freddie Bunn	PROJECT UTILITY COORDINATOR

DIVISION OF HIGHWAYS
DIVISION 3
5501 Barbados Blvd.
Castle Hayne, NC 28429

Lonny Sleeper	DIVISION UTILITY ENGINEER
Derek Pielech, PE	BRIDGE PROGRAM MANAGER

TIP PROJECT: 17BP.3.R.80

09/08/99

4/25/2022
...\Roadway\B5311_Rdy_tsh.dgn
3:27:11 PM

PROJECT REFERENCE NO.	SHEET NO.
17BP.3.R.80	UO-2
THIS SHEET CORRESPONDS TO RDY-4	

UTILITIES BY OTHERS

ALL PROPOSED UTILITY WORK SHOWN ON THIS SHEET WILL BE DONE BY OTHERS. NO PAYMENT WILL BE MADE TO THE CONTRACTOR FOR PROPOSED UTILITY WORK SHOWN ON THIS SHEET.

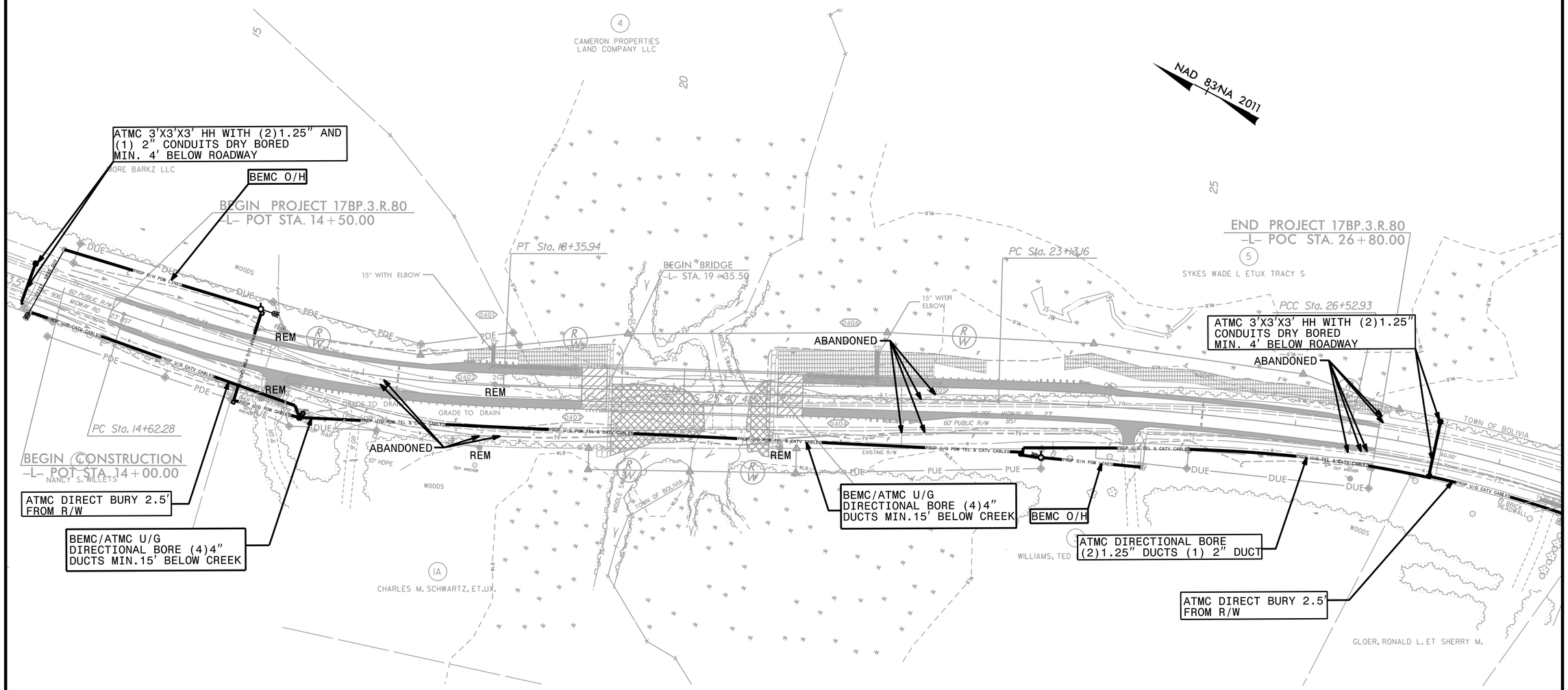

5/14/99

6/8/2022
R:\Roadway\B5311_Rdy_psh_4.dgn

DocuSign Envelope ID: C07640C6-2CCE-4D9D-9047-9D0A7C83FC92

TIP PROJECT: 17BP.3.R.80

T.I.P. NO.	SHEET NO.
17BP.3.R.80	UC–1

STATE OF NORTH CAROLINA
DIVISION OF HIGHWAYS

UTILITY CONSTRUCTION PLANS
BRUNSWICK COUNTY

LOCATION: REPLACE BRIDGE 104 OVER MIDDLE SWAMP ON NC 906 (MIDWAY ROAD SE)

TYPE OF WORK: WATER LINE RELOCATION

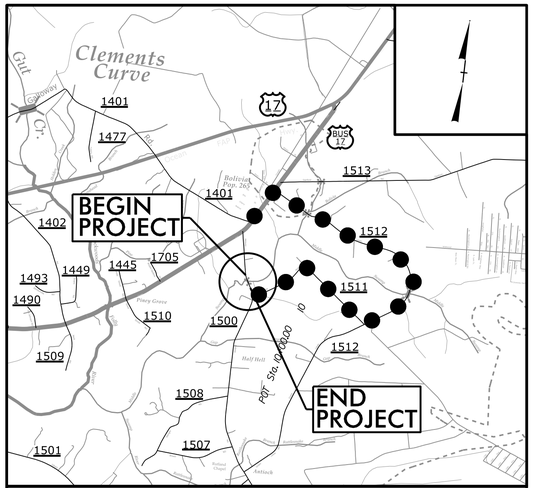

VICINITY MAP

DETOUR ROUTE

N.T.S.

NAD 83/ NA 2011

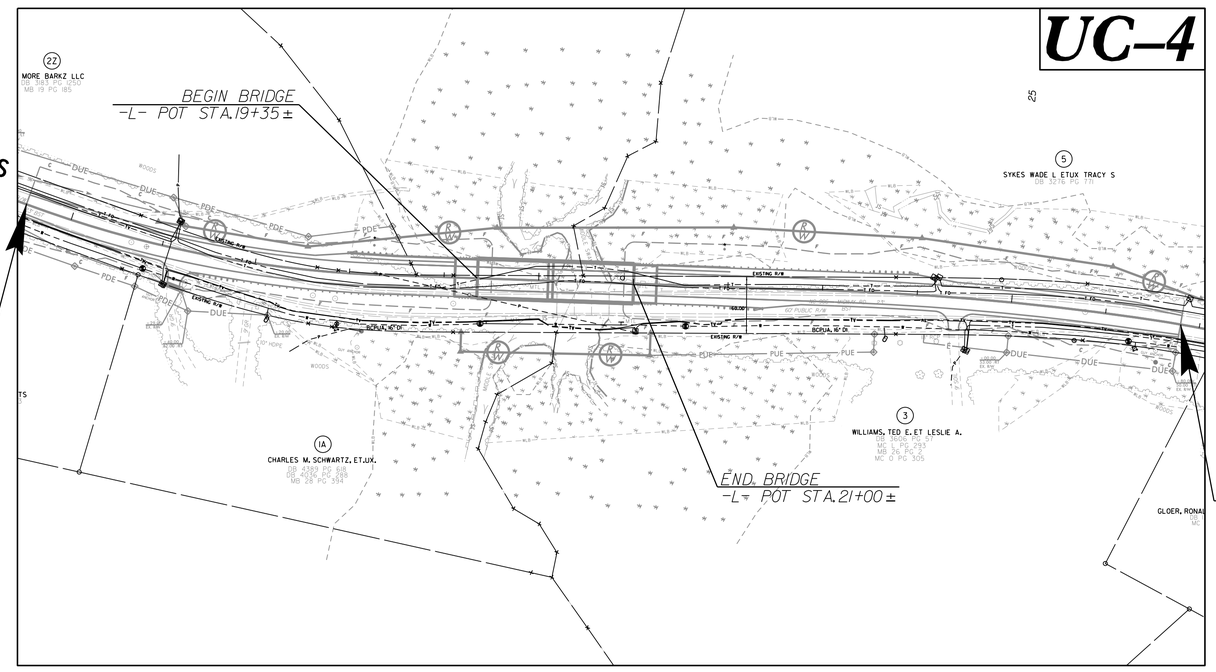

BEGIN PROJECT 17BP.3.R.80
–L– POT STA. 14 + 50.00

END PROJECT 17BP.3.R.80
–L– POC STA. 26 + 80.00

INCOMPLETE PLANS
DO NOT USE FOR R/W ACQUISITION

PRELIMINARY PLANS
DO NOT USE FOR CONSTRUCTION

DOCUMENT NOT CONSIDERED FINAL UNTIL ALL SIGNATURES ARE COMPLETED

GRAPHIC SCALES

50 25 0 50 100
PLANS

50 25 0 50 100
PROFILE (HORIZONTAL)

10 5 0 10 20
PROFILE (VERTICAL)

INDEX OF SHEETS

SHEET NO.:	DESCRIPTION:
UC–1	TITLE SHEET
UC–2	UTILITY SYMBOLOGY
UC–3	NOTES
UC–3A THRU UC–3C	DETAILS
UC–4	PLAN /PROFILE SHEET

WATER AND SEWER OWNERS ON PROJECT

(A) WATER LINE – BRUNSWICK COUNTY
(B) SANITARY SEWER – N/A

PREPARED IN THE OFFICE OF

Weston & Sampson
WSE of North Carolina, PC
598 East Chatham Street Suite 137 Cary, NC 27511
Phone: 919.297.0220 Fax: 919.297.0221
NC License: C-4847

FOR CDM Smith
CDM Smith Inc.
5400 Glenwood Avenue
Suite 400
Raleigh, NC 27612-3228
NC COA No. F-1255

KEVIN ZDEB, PE — PROJECT ENGINEER
AARON COLLINS, EI — PROJECT DESIGN ENGINEER

SEAL

NORTH CAROLINA PROFESSIONAL SEAL 27611 ENGINEER KEVIN C. ZDEB

Docusigned by: Kevin C. Zdeb

4/8/2022

DIVISION OF HIGHWAYS
HIGHWAY DIVISION 3

5501 BARBADOS BLVD.
CASTLE HAYNE, NC 28429
PHONE (910) 341-2001
FAX (910) 675-0143

D. CHAD KIMES, PE — DIVISION ENGINEER
DEREK PIELECH — DIVISION BRIDGE PROGRAM ENGINEER
LONNY SLEEPER — DIVISION UTILITY ENGINEER
ROY SUTTON — DIVISION UTILITY COORDINATOR

09/08/99
4/8/2022 4:44:23 AM \\wse03.local\WSE\Projects\NC_Cary0ldServer\Engineer\JOBS\0754\006\10000\Utilities\Engineering\UC\Proj\17BP3R80_ut_tsh.dgn

DocuSign Envelope ID: C07640C6-2CCE-4D9D-9047-9D0A7C83FC92

PROJECT REFERENCE NO.	SHEET NO.
17BP.3.R.80	UC-2

STATE OF NORTH CAROLINA
DIVISION OF HIGHWAYS

UTILITIES PLAN SHEET SYMBOLS

PROPOSED WATER SYMBOLS

- Water Line (Sized as Shown) — 12" WL
- 11¼ Degree Bend
- 22½ Degree Bend
- 45 Degree Bend
- 90 Degree Bend
- Plug
- Tee
- Cross
- Reducer
- Gate Valve — GV
- Butterfly Valve — BV
- Tapping Valve — TGV
- Line Stop — LS
- Line Stop with Bypass — LS/BP
- Blow Off — BO
- Fire Hydrant — PFH
- Relocate Fire Hydrant — RFH
- Remove Fire Hydrant — REM FH
- Water Meter — PWM
- Relocate Water Meter — RWM
- Remove Water Meter — REM WM
- Water Pump Station — PS(W)
- RPZ Backflow Preventer — PRPZ
- DCV Backflow Preventer — PBFP
- Relocate RPZ Backflow Preventer — RRPZ
- Relocate DCV Backflow Preventer — RBFP

PROPOSED SEWER SYMBOLS

- Gravity Sewer Line (Sized as Shown) — 12" SS
- Force Main Sewer Line (Sized as Shown) — 12" FSS
- Manhole (Sized per Note)
- Sewer Pump Station — PS(SS)

PROPOSED MISCELLANOUS UTILITIES SYMBOLS

- Power Pole
- Telephone Pole
- Joint Use Pole
- Telephone Pedestal — TEL PED
- Utility Line by Others (Type as Shown) — PROP O/H POW LINES
- Trenchless Installation — 12" TL INSTALL
- Encasement by Open Cut — 24" ENCAS BY OC
- Encasement — 24" ENCASEMENT
- Thrust Block
- Air Release Valve — AR
- Utility Vault — UV
- Concrete Pier — CP
- Steel Pier — SP
- Plan Note — NOTE
- Pay Item Note — PAY ITEM

EXISTING UTILITIES SYMBOLS

- Power Pole
- Telephone Pole
- Joint Use Pole
- Utility Pole
- Utility Pole with Base
- H-Frame Pole
- Power Transmission Line Tower
- Water Manhole
- Power Manhole
- Telephone Manhole
- Sanitary Sewer Manhole
- Hand Hole for Cable
- Power Transformer
- Telephone Pedestal
- CATV Pedestal
- Gas Valve
- Gas Meter
- Located Miscellaneous Utility Object
- Abandoned According to Utility Records — AATUR
- End of Information — E.O.I.
- *Underground Power Line — P
- *Underground Telephone Cable — T
- *Underground Telephone Conduit — TC
- *Underground Fiber Optics Telephone Cable — T FO
- *Underground TV Cable — TV
- *Underground Fiber Optics TV Cable — TV FO
- *Underground Gas Pipeline — G
- Aboveground Gas Pipeline — A/G Gas
- *Underground Water Line — W
- Aboveground Water Line — A/G Water
- *Underground Gravity Sanitary Sewer Line — SS
- Aboveground Gravity Sanitary Sewer Line — A/G Sanitary Sewer
- *Underground SS Forced Main Line — FSS
- Underground Unknown Utility Line — ?UTL
- SUE Test Hole
- Water Meter
- Water Valve
- Fire Hydrant
- Sanitary Sewer Cleanout

*For Existing Utilities

- Utility Line Drawn from Record (Type as Shown) — W
- Designated Utility Line (Type as Shown) — W

REV: 2/1/2012

5/14/99

11/16/2021
...ver\Engineering\UBS\0754\006\10000\Utilities\Engineering\UC\Proj\17BP3R80_ut_UC-02_sym.dgn
4:07:52 PM

DocuSign Envelope ID: C07640C6-2CCE-4D9D-9047-9D0A7C83FC92

PROJECT REFERENCE NO.	SHEET NO.
17BP.3.R.80	UC-3

DESIGNED BY: KCZ
DRAWN BY: AJC
CHECKED BY: KCZ
APPROVED BY: KCZ
REVISED:

NORTH CAROLINA DEPARTMENT OF TRANSPORTATION

UTILITIES ENGINEERING SEC.
PHONE:(919)707-6690
FAX:(919)250-4151

NORTH CAROLINA PROFESSIONAL SEAL 27611 ENGINEER KEVIN C. ZAIL
DocuSigned by: Kevin C. Zail
4/8/2022
UTILITY CONSTRUCTION PLANS ONLY

UTILITY CONSTRUCTION

DOCUMENT NOT CONSIDERED FINAL UNTIL ALL SIGNATURES ARE COMPLETED

Weston & Sampson
NC License: C-4647
WSE of North Carolina, PC
598 East Chatham Street Suite 137 Cary, NC 27511
Phone: 919.297.0220 Fax: 919.297.0221

UTILITY CONSTRUCTION

GENERAL NOTES:

1. THE PROPOSED UTILITY CONSTRUCTION SHALL MEET THE APPLICABLE REQUIREMENTS OF THE NC DEPARTMENT OF TRANSPORTATION'S "STANDARD SPECIFICATIONS FOR ROADS AND STRUCTURES" DATED JANUARY 2018.

2. THE EXISTING WATER LINE UTILITIES BELONG TO BRUNSWICK COUNTY PUBLIC UTILITIES.

CONTACT: BRENT LOCKAMY, PE
PHONE: 910-253-2460

3. ALL WATER LINES TO BE INSTALLED WITHIN COMPLIANCE OF THE RULES AND REGULATIONS OF THE NORTH CAROLINA DEPARTMENT OF ENVIRONMENTAL AND NATURAL RESOURCES, DIVISION OF ENVIRONMENTAL HEALTH.

4. THE UTILITY OWNER OWNS THE EXISTING UTILITY FACILITIES AND WILL OWN THE NEW UTILITY FACILITIES AFTER ACCEPTANCE BY THE DEPARTMENT. THE DEPARTMENT OWNS THE CONSTRUCTION CONTRACT AND HAS ADMINISTRATIVE AUTHORITY. COMMUNICATIONS AND DECISIONS BETWEEN THE CONTRACTOR AND UTILITY OWNER ARE NOT BINDING UPON THE DEPARTMENT OR THIS CONTRACT UNLESS AUTHORIZED BY THE ENGINEER. AGREEMENTS BETWEEN THE UTILITY OWNER AND CONTRACTOR FOR THE WORK THAT IS NOT PART OF THIS CONTRACT OR IS SECONDARY TO THIS CONTRACT ARE ALLOWED, BUT ARE NOT BINDING UPON THE DEPARTMENT.

5. PROVIDE ACCESS FOR THE DEPARTMENT PERSONNEL AND THE OWNER'S REPRESENTATIVES TO ALL PHASES OF CONSTRUCTION. NOTIFY DEPARTMENT PERSONNEL AND THE UTILITY OWNER TWO WEEKS PRIOR TO COMMENCEMENT OF ANY WORK AND ONE WEEK PRIOR TO SERVICE INTERRUPTION. KEEP UTILITY OWNERS' REPRESENTATIVES INFORMED OF WORK PROGRESS AND PROVIDE OPPORTUNITY FOR INSPECTION OF CONSTRUCTION AND TESTING.

6. THE PLANS DEPICT THE BEST AVAILABLE INFORMATION FOR THE LOCATION, SIZE, AND TYPE OF MATERIAL FOR ALL EXISTING UTILITIES. MAKE INVESTIGATIONS FOR DETERMINING THE EXACT LOCATION, SIZE, AND TYPE MATERIAL OF THE EXISTING FACILITIES AS NECESSARY FOR THE CONSTRUCTION OF THE PROPOSED UTILITIES AND FOR AVOIDING DAMAGE TO EXISTING FACILITIES. REPAIR ANY DAMAGE INCURRED TO EXISTING FACILITIES TO THE ORIGINAL OR BETTER CONDITION AT NO ADDITONAL COST TO THE DEPARTMENT.

7. MAKE FINAL CONNECTIONS OF THE NEW WORK TO THE EXISTING SYSTEM WHERE INDICATED ON THE PLANS, AS REQUIRED TO FIT THE ACTUAL CONDITIONS, OR AS DIRECTED.

8. MAKE CONNECTIONS BETWEEN EXISTING AND PROPOSED UTILITIES AT TIMES MOST CONVENIENT TO THE PUBLIC, WITHOUT ENDANGERING THE UTILITY SERVICE, AND IN ACCORDANCE WITH THE UTILITY OWNER'S REQUIREMENTS. MAKE CONNECTIONS ON WEEKENDS, AT NIGHT, AND ON HOLIDAYS IF NECESSARY.

9. ALL UTILITY MATERIALS SHALL BE APPROVED PRIOR TO DELIVERY TO THE PROJECT. SEE 1500-7, " SUBMITTALS AND RECORDS" IN SECTION 1500 OF THE STANDARD SPECIFICATIONS.

10. CONTRACTOR SHALL NOT OPERATE ANY VALVES ON THE EXISTING UTILITY SYSTEMS. CONTRACTOR SHALL CONTACT THE UTILITY OWNER TO CONDUCT STRATEGIC OPERATION OF VALVES FOR SERVICE INTERRUPTION IN ORDER TO PERFORM SPECIFIC WORK.

PROJECT SPECIFIC NOTES:

1. PROPOSED OPEN TRENCH WATER LINE SHALL BE 16" FUSIBLE PVC C-905 DR-18 D.I.P.S. THAT CONFORMS TO NSF-61, NSF-14, AND ASTM CELL CLASSIFICATION 12454.

2. PROPOSED WATER LINE FOR DIRECTIONAL DRILLING SHALL BE 16" FUSIBLE PVC C-905 DR-18 D.I.P.S. THAT CONFORMS TO NSF-61, NSF-14, AND ASTM CELL CLASSIFICATION 12454.

3. ALL WATER LINE FITTINGS 14-INCH THROUGH 20-INCH SHALL BE DUCTILE IRON AWWA C110 WITH A MINIMUM PRESSURE RATING OF 250 PSI.

4. ALL PROPOSED FITTINGS (BENDS, TEES, CROSSES, REDUCERS, PLUGS, ETC.) SHALL BE ADEQUATELY RESTRAINED BY THE USE OF A RESTRAINED JOINT SYSTEM AND/OR CAST IN PLACE CONCRETE THRUST RESTRAINTS AS DETAILED ON THESE DRAWINGS, AS DIRECTED BY THE RESIDENT ENGINEER AND APPROVED BY THE UTILITY OWNER REPRESENTATIVE.

5. JOINT RESTRAINT DEVICES FOR VALVES AND FITTINGS ON PVC PIPE SHALL HAVE DUCTILE IRON GLANDS THAT CAN BE USED WITH THE STANDARD MECHANICAL JOINT OF THE VALVES AND FITTINGS. TWIST OFF NUTS WITH PRESET FACTORY TORQUE SETTING SHALL BE USED TO ENSURE PROPER ACTUATION OF THE RESTRAINT DEVICE. ALL NUTS, BOLTS, AND FASTENERS SHALL BE HIGH STRENGTH ALLOY STEEL

6. ALL DUCTILE IRON PIPE AND FITTINGS INSTALLED IN CORROSIVE, CONTAMINATED, AND/OR DREDGED SOILS SHALL BE WRAPPED IN A POLYETHYLENE ENCASEMENT PER ANSI / AWWA A21.5 / C105 "POLYETHYLENE ENCASEMENT FOR DUCTILE IRON PIPING FOR WATER AND OTHER LIQUIDS".
ALL FASTENERS SHALL BE STAINLESS STEEL TYPE 304, MINIMUM GRADE.

7. CONTRACTOR'S ATTENTION IS DIRECTED TO SECTIONS 102, 107, AND 1550 OF THE STANDARD SPECIFICATIONS CONCERNING TRENCHLESS INSTALLATION. IT IS CONTRACTOR'S RESPONSIBILITY TO HAVE BORE DESIGNED AND SEALED BY A LICENSED NORTH CAROLINA PROFESSIONAL ENGINEER. NO DAMAGE IS ALLOWED TO RIVER, STREAM, CREEK, WETLANDS, OR BUFFER ZONES.

8. TRACER WIRE SHALL BE INSTALLED ALONG ALL WATER LINE, INCLUDING PIPE INSTALLED BY HDD. TRACER WIRE SHALL BE BROUGHT UP INSIDE OF VALVE BOXES. CONTRACTOR SHALL PERFORM A SIGNAL STRENGTH TEST OF THE INSTALLED TRACER WIRE AT END OF PROJECT WITH UTILITY OWNER REPRESENTATIVE PRESENT.

9. IN ADDITION TO TRACER WIRE, CONTRACTOR SHALL ALSO INSTALL ELECTRONIC MARKER BALLS ALONG THE WATER LINE AS REQUIRED BY THE UTILITY OWNER. REFER TO THE SPECIAL PROVISIONS AND DETAIL ON SHEET UC-3C.

10. ALL HYDRANT AND BLOW-OFF OPERATIONS SHALL BE CONDUCTED IN SUCH A MANNER THAT: PRIVATE PROPERTY IS NOT IMPACTED; THERE SHALL BE NO FLOODING OF STREETS AND DRIVEWAYS; AND NO OTHER TRAFFIC PROBLEMS ARE CREATED.

11. VALVES ON WATER LINES 16-INCH AND LARGER SHALL BE BUTTERFLY VALVES CONFORMING TO AWWA C504 WITH MECHANICAL JOINT ENDS AND RATED FOR 150 PSI WORKING PRESSURE.

PROJECT QUANTITIES

ITEM NUMBER	DESCRIPTION	QUANTITY	
-	-	-	-
5326600000-E	16" WATER LINE	479	LF
5329000000-E	DUCTILE IRON WATER PIPE FITTINGS	2,070	POUNDS
5558600000-E	16" VALVE	2	EA
5810000000-E	ABANDON 16" UTILITY PIPE	477	LF
5872608000-E	DIRECTIONAL DRILLING OF 16"	343	LF

4/8/2022
\\wseo01\Local\WSE\Projects\NC_Cary0ldServer\Engineer\JOBS\0754\006\10000\Utilities\Engineering\UC\Proj\17BP3R80_ut_UC-03_not.dgn
4:05:46 PM

DocuSign Envelope ID: C07640C6-2CCE-4D9D-9047-9D0A7C83FC92

PROJECT REFERENCE NO.	SHEET NO.
17BP.3.R.80	UC-3A

DESIGNED BY: KCZ
DRAWN BY: AJC
CHECKED BY: KCZ
APPROVED BY: KCZ
REVISED:

NORTH CAROLINA DEPARTMENT OF TRANSPORTATION
UTILITIES ENGINEERING SEC.
PHONE:(919)707-6690
FAX:(919)250-4151

NORTH CAROLINA PROFESSIONAL SEAL 027661 ENGINEER KEVIN C. ZOEB
Docu Signed by: Kevin C. Zoeb
4/8/2022
UTILITY CONSTRUCTION PLANS ONLY

UTILITY CONSTRUCTION

DOCUMENT NOT CONSIDERED FINAL UNTIL ALL SIGNATURES ARE COMPLETED

Weston & Sampson
WSE of North Carolina, PC
598 East Chatham Street Suite 137
Phone: 919.297.0220
NC License: C-4647
Cary, NC 27511
Fax: 919.297.0221

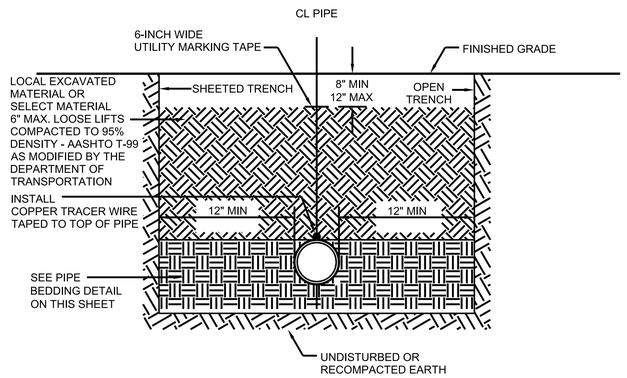

RECOMMENDED OPEN TRENCH WIDTH AT TOP OF PIPE	
NOMINAL PIPE SIZE (INCHES)	TRENCH WIDTH (INCHES)
4	29
6	31
8	33
10	35
12	37
14	40
16	42
18	44

GENERAL TRENCH DETAIL

NOT TO SCALE

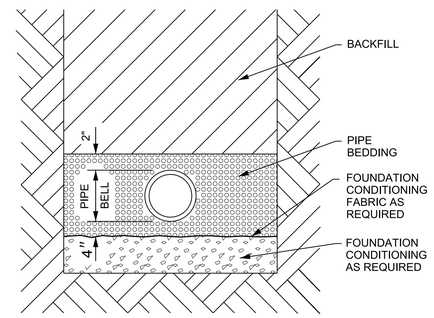

NOTES:
1. IF REQUIRED, PLACE FOUNDATION CONDITIONING MATERIAL BELOW BEDDING AS DIRECTED BY ENGINEER.
2. PIPE BEDDING SHALL BE SELECT MATERIAL, EITHER CLASS II (TYPE 1) OR CLASS III, AS PER SECTION 1016.
3. TRENCH SHALL BE BACKFILLED IN LOOSE 6" LAYERS COMPACTED TO TOP OF TRENCH USING LOCAL EXCAVATED MATERIAL IF APPROVED BY THE ENGINEER, OR SELECT MATERIAL.
3. LOCAL EXCAVATED MATERIAL IS DEFINED AS NATIVE SOIL EXCAVATED FROM THE TRENCH THAT IS FREE OF: ROCKS; FOREIGN MATERIAL; AND FROZEN EARTH.
4. COMPACTION SHALL BE TO APPROXIMATELY 95% DENSITY IN ACCORDANCE WITH AASHTO T-99 AS MODIFIED BY THE DEPARTMENT OF TRANSPORTATION.

PIPE BEDDING DETAIL

NOT TO SCALE

5/14/99
4/8/2022
\\wse03.local\WSE\Projects\NC_CaryOldServer\Engineer\JOBS\0754\006\10000\Utilities\Engineering\UC\Proj\17BP3R80_ut_UC-03A_det.dgn
4:49:59 AM

DocuSign Envelope ID: C07640C6-2CCE-4D9D-9047-9D0A7C83FC92

PROJECT REFERENCE NO.	SHEET NO.
17BP.3.R.80	UC-3B

DESIGNED BY: KCZ
DRAWN BY: AJC
CHECKED BY: KCZ
APPROVED BY: KCZ
REVISED:

NORTH CAROLINA DEPARTMENT OF TRANSPORTATION

UTILITIES ENGINEERING SEC.
PHONE:(919)707-6690
FAX:(919)250-4151

NORTH CAROLINA PROFESSIONAL SEAL 027661 ENGINEER KEVIN C. ZOEB
Docu Signed by: Kevin C. Zoeb
4/8/2022

UTILITY CONSTRUCTION PLANS ONLY

UTILITY CONSTRUCTION

DOCUMENT NOT CONSIDERED FINAL UNTIL ALL SIGNATURES ARE COMPLETED

Weston & Sampson
WSE of North Carolina, PC
598 East Chatham Street Suite 137 Cary, NC 27511
Phone: 919.297.0220 Fax: 919.297.0221
NC License: C-4647

BLOCKING DIMENSIONS			
PIPE SIZE	A	B	C
UP TO 10"	4' - 0"	2' - 6"	1' - 6"
12" TO 16"	5' - 0"	4' - 0"	2' - 0"
18" TO 24"	8' - 0"	6' - 0"	3' - 0"

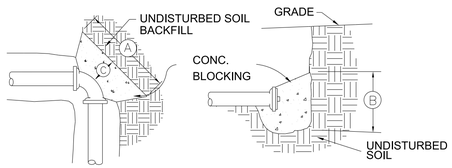

PLAN - BEND
SEE SECTION FOR DEPTH B

SECTION - PLUG
SEE PLAN FOR LENGTH A

NOTES:
1. 2500 P.S.I. CONC.
2. REMOVE LOOSE EARTH AND POUR AGAINST UNDISTURBED SOIL.
3. BACKFILL TO EXISTING/FINISH GRADE AFTER CONCRETE HAS CURED FOR 24 HOURS.
4. CONCRETE SHALL NOT COVER FLANGES, BOLTS, MEGA-LUGS, RODS, ETC.

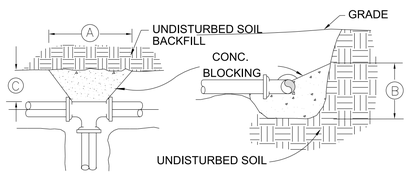

PLAN - TEE
SEE SECTION FOR DEPTH B

SECTION - BEND & TEE
SEE PLAN FOR LENGTH A

THRUST BLOCKS
NOT TO SCALE

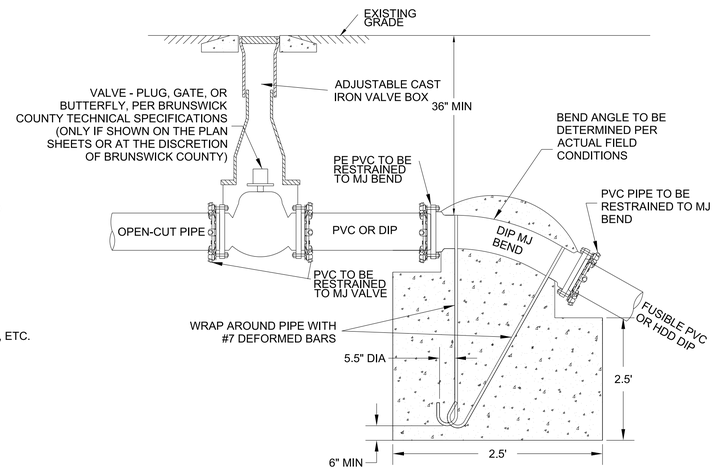

OPEN-CUT PIPE TO FUSIBLE PVC OR HDD DIP TRANSITION ASSEMBLY
NOT TO SCALE

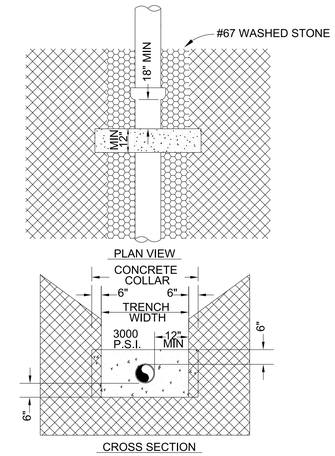

NOTES:

1. UNRESTRAINED SEWER LINES ON 20% SLOPE OR GREATER SHALL BE ANCHORED SECURELY WITH CONCRETE COLLARS. MINIMUM 1 CONCRETE COLLAR PER PIPE JOINT. ADDITIONAL COLLARS MAY BE REQUIRED BY ENGINEER.
2. COLLARS FOR ANTI-SEEPAGE (PIPING) CONTROL FOR PIPELINES CONSTRUCTED THROUGH WETLANDS SHALL BE INSTALLED AT LOCATIONS SHOWN ON THE PLANS.

"X" BAR

PIPE COLLAR
NOT TO SCALE

NOTES:

1. THIS DETAIL IS A GENERAL SCHEMATIC SHOWING ISOLATION VALVE LOCATIONS AND AIR RELEASE VALVES.
2. FINAL LOCATION OF PIPE APPURTENANCES SHALL BE COORDINATED WITH RESIDENT ENGINEER AND BRUNSWICK COUNTY REPRESENTATIVE

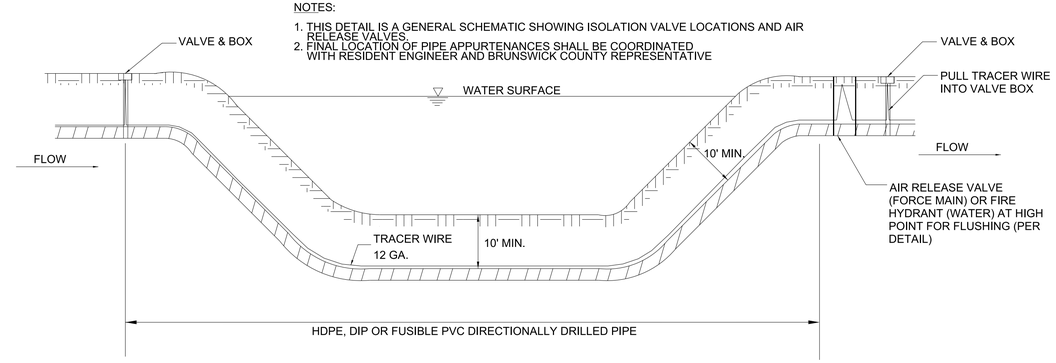

VALVE LOCATIONS FOR DIRECTIONAL DRILL OF PIPE UNDER WETLANDS/WATER BODY
NOT TO SCALE

5/14/99
4/8/2022
\\wsecom\Local\WSE\Projects\NC_CaryOldServer\Engineer\JOBS\0754\006\10000\Utilities\Engineering\UC\Proj\17BP3R80_ut_UC-03B_det.dgn
4:19:56 AM

DocuSign Envelope ID: C07640C6-2CCE-4D9D-9047-9D0A7C83FC92

5/14/99

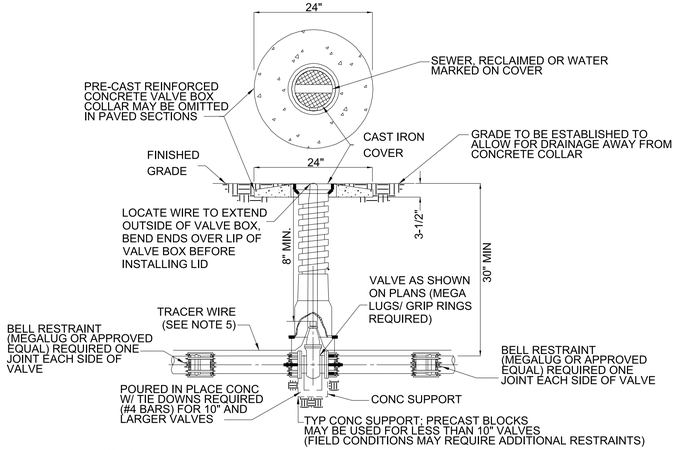

NOTES:

1. TOP OF VALVE BOX AND COLLAR SHALL BE PAINTED GREEN FOR SEWER FM, PURPLE FOR RECLAIMED WATER, AND BLUE FOR WATER.
2. EXTENSION STEM WILL BE REQUIRED TO BE WITHIN 2 FEET OF THE SURFACE IF OPERATING NUT WOULD OTHERWISE BE OVER 5 FEET BELOW GRADE. EXTENSIONS SHALL BE PERMANENTLY ATTACHED TO VALVE NUT AND SHALL BE PROVIDED WITH HORIZONTAL SPACERS FOR VERTICAL ALIGNMENT WITHIN THE VALVE BOX.
3. MINIMUM CLEARANCE TO EXTENSION IS 8".
4. WIRE COLORS REQUIRED: SEWER-GREEN/WATER-BLUE/RECLAIMED WATER-PURPLE OR GREEN WITH PURPLE STRIPE

VALVE BOX
NOT TO SCALE

NOTES:

1. WIRE COLOR REQUIRED:
   a) WATER - BLUE
   b) SEWER - GREEN
   c) RECLAIMED - PURPLE OR GREEN WITH PURPLE STRIPE

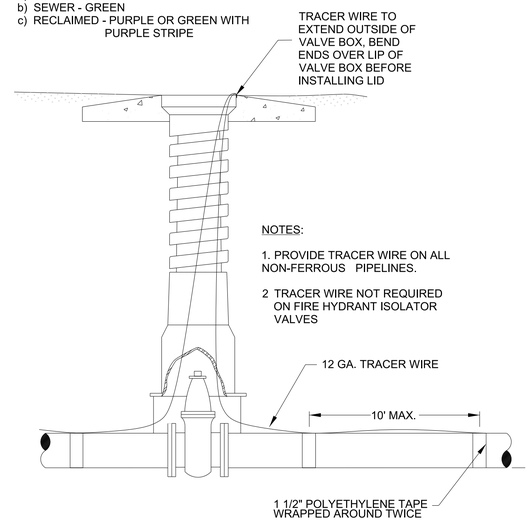

NOTES:

1. PROVIDE TRACER WIRE ON ALL NON-FERROUS PIPELINES.
2. TRACER WIRE NOT REQUIRED ON FIRE HYDRANT ISOLATOR VALVES

TRACER WIRE AT VALVES
NOT TO SCALE

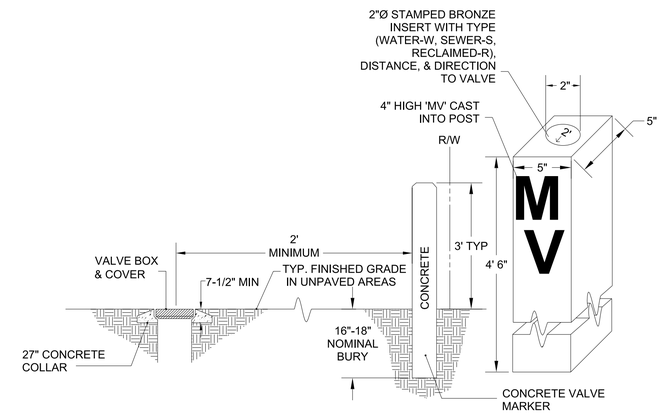

NOTES:

1. VALVE MARKER TO BE INSTALLED UPRIGHT WITH THE CAST 'MV' FACING THE NEAREST STREET.
2. DIRECTION AND DISTANCE MUST BE ETCHED OR STAMPED INTO THE BRONZE INSERT.
3. ONE POST TO BE INSTALLED FOR EACH VALVE LOCATED OUTSIDE OF THE PAVEMENT.
4. VALVE MARKER TO BE INSTALLED AT THE RIGHT OF WAY.
5. NO VALVE MARKER REQUIRED FOR FIRE HYDRANT ISOLATION VALVES.
6. PAINT VALVE MARKER USING STANDARD LOCATING COLORS:
   a) WATER - BLUE
   b) SEWER - GREEN
   c) RECLAIMED - PURPLE

VALVE MARKER IN RIGHT OF WAY
(PAVED)
NOT TO SCALE

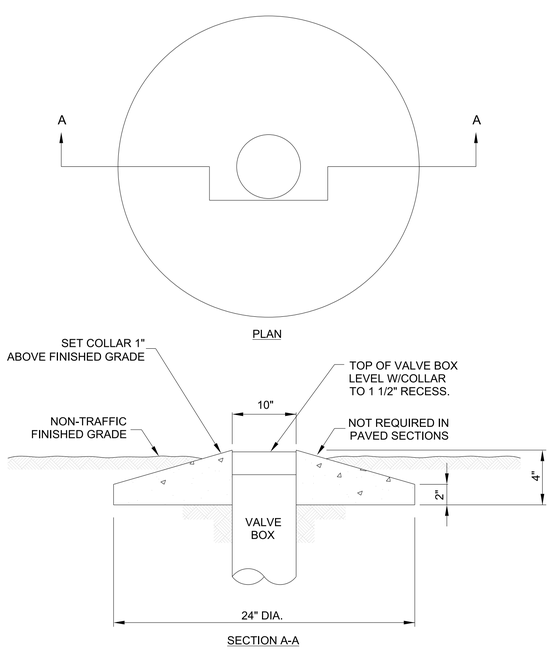

PRECAST CONCRETE VALVE BOX COLLAR
NOT TO SCALE

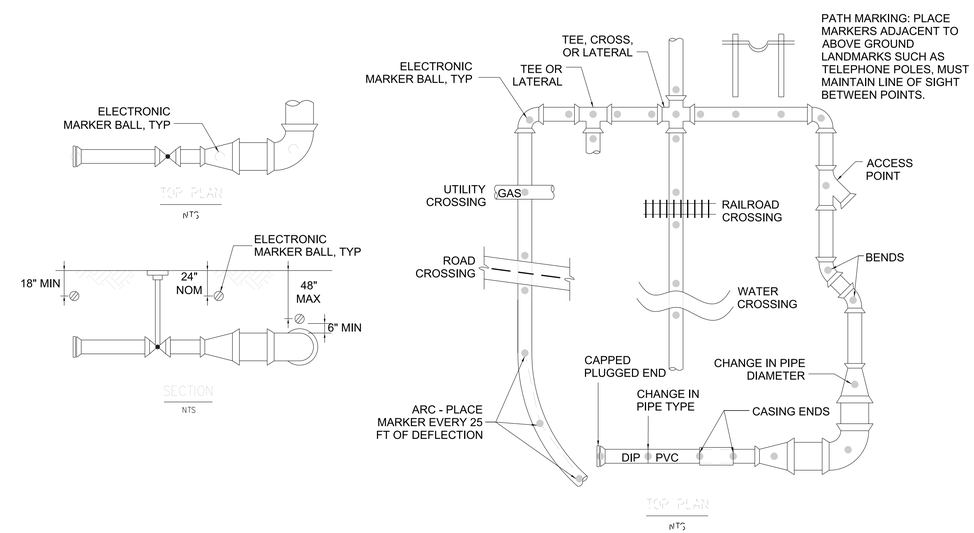

ELECTRONIC MARKER BALL PLACEMENT DETAIL
NOT TO SCALE

PROJECT REFERENCE NO.	SHEET NO.
17BP.3.R.80	UC-3C

DESIGNED BY: KCZ
DRAWN BY: AJC
CHECKED BY: KCZ
APPROVED BY: KCZ
REVISED:

NORTH CAROLINA DEPARTMENT OF TRANSPORTATION
UTILITIES ENGINEERING SEC.
PHONE:(919)707-6690
FAX:(919)250-4151

NORTH CAROLINA PROFESSIONAL SEAL 027661 ENGINEER KEVIN C. ZOBS
Docusigned by: Kevin C. Zobs
4/8/2022
UTILITY CONSTRUCTION PLANS ONLY

UTILITY CONSTRUCTION

DOCUMENT NOT CONSIDERED FINAL UNTIL ALL SIGNATURES ARE COMPLETED

Weston & Sampson
WSE of North Carolina, PC
598 East Chatham Street Suite 137 Cary, NC 27511
Phone: 919.297.0220 Fax: 919.297.0221
NC License: C-4647

4/8/2022
\\wsecloud\WSE\Projects\NC_CaryOldServer\Engineer\JOBS\0754\006\10000\Utilities\Engineering\UC\Proj\17BP3R80_ut_UC-03C_det.dgn
5:03:48 AM

DocuSign Envelope ID: 8C14C446-79E0-42B8-B92A-25EAAD90727C

THE ESTIMATED QUANTITY OF DUCTILE IRON WATER PIPE FITTINGS ON THIS PLAN SHEET IS 2,070 LBS. THE ACTUAL QUANTITY AND TYPE OF FITTINGS WILL VARY BASED ON FIELD CONDITIONS.

WATER / SANITARY SEWER UTILITY OWNERS ON THIS SHEET:
BRUNSWICK COUNTY
EXISTING UTILITIES:
WATER LINE: 16"
CONTACT: BRENT LOCKAMY, PE
PHONE: (910) 253-2460

PROJECT REFERENCE NO.	SHEET NO.
17BP.3.R.80	UC-4
DESIGNED BY: AJC	
DRAWN BY: AJC	
CHECKED BY: KSH	
APPROVED BY: KSH	
REVISED:	
NORTH CAROLINA DEPARTMENT OF TRANSPORTATION	
UTILITIES ENGINEERING SEC. PHONE:(919)707-6690 FAX:(919)250-4151	UTILITY CONSTRUCTION PLANS ONLY

NORTH CAROLINA PROFESSIONAL SEAL 22611 ENGINEER KEVIN C. ZIEB
Docu Sign Envelope ID: 8C14C446-79E0-42B8-B92A-25EAAD90727C
4/25/2022

DOCUMENT NOT CONSIDERED FINAL UNLESS ALL SIGNATURES COMPLETED

UTILITY CONSTRUCTION

Weston & Sampson
WSE of North Carolina, PC
598 East Chatham Street Suite 137 Cary, NC 27511
Phone: 919.297.0220 Fax: 919.297.0221
NC License: C-4647

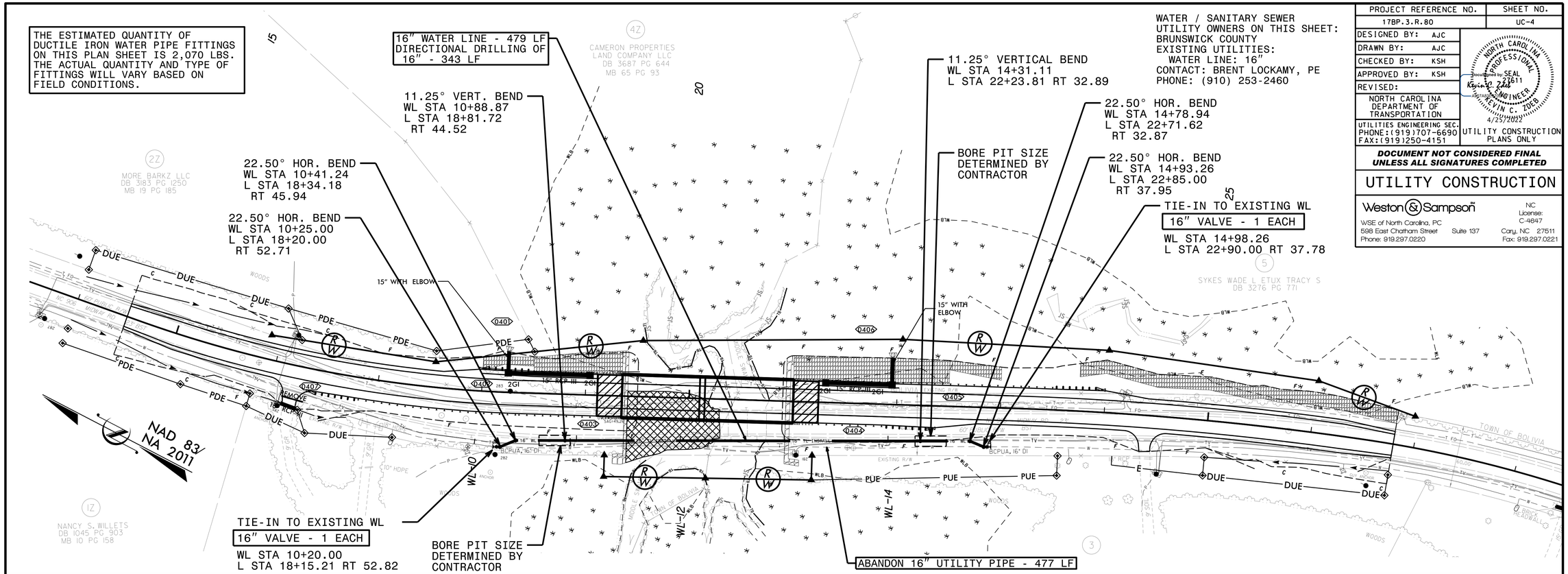

-WL-

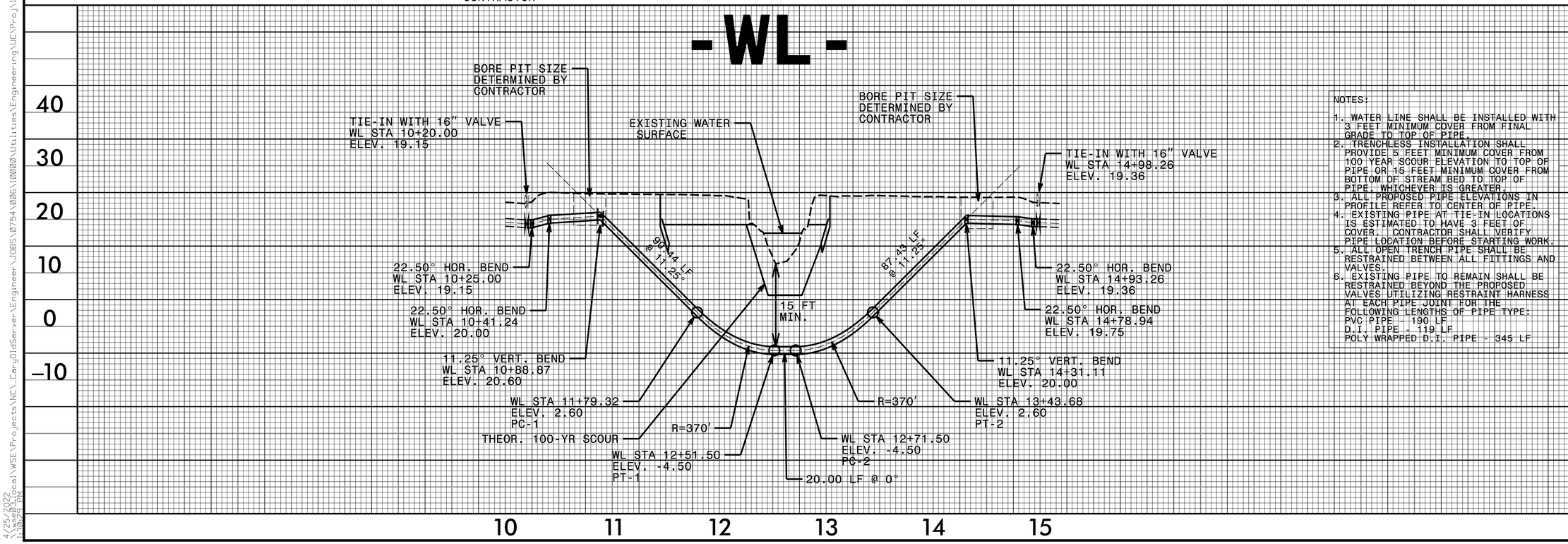

NOTES:

1. WATER LINE SHALL BE INSTALLED WITH 3 FEET MINIMUM COVER FROM FINAL GRADE TO TOP OF PIPE.
2. TRENCHLESS INSTALLATION SHALL PROVIDE 5 FEET MINIMUM COVER FROM 100 YEAR SCOUR ELEVATION TO TOP OF PIPE OR 15 FEET MINIMUM COVER FROM BOTTOM OF STREAM BED TO TOP OF PIPE, WHICHEVER IS GREATER.
3. ALL PROPOSED PIPE ELEVATIONS IN PROFILE REFER TO CENTER OF PIPE.
4. EXISTING PIPE AT TIE-IN LOCATIONS IS ESTIMATED TO HAVE 3 FEET OF COVER. CONTRACTOR SHALL VERIFY PIPE LOCATION BEFORE STARTING WORK.
5. ALL OPEN TRENCH PIPE SHALL BE RESTRAINED BETWEEN ALL FITTINGS AND VALVES.
6. EXISTING PIPE TO REMAIN SHALL BE RESTRAINED BEYOND THE PROPOSED VALVES UTILIZING RESTRAINT HARNESS AT EACH PIPE JOINT FOR THE FOLLOWING LENGTHS OF PIPE TYPE:
   PVC PIPE - 190 LF
   D.I. PIPE - 119 LF
   POLY WRAPPED D.I. PIPE - 345 LF

4/25/2022 4:30:29 PM
\\wse\Local\WSE\Projects\NC_Cary\OldServer\Engineer\JOBS\07541006\10000\Utilities\Engineering\UC\Proj\17BP3R80_ut_UC-04.psb.dgn

PROJECT REFERENCE NO.	SHEET NO.
17BP.3.R.80	X-1

CROSS SECTION SHEET INDEX

X–1 CROSS SECTION SHEET INDEX
X–2 THRU X–9 –L–

Note: "Quantities are approximate only. The Resident Engineer will re–cross–section the work accurately when the project is staked out. These cross–section notes will be used in computing the final quantities for which the contractor will be paid."

5/28/99
-SYSTIME-
...\Roadway\XSC\B5311_Rdy_X1.dgn
USER: CONRADAM

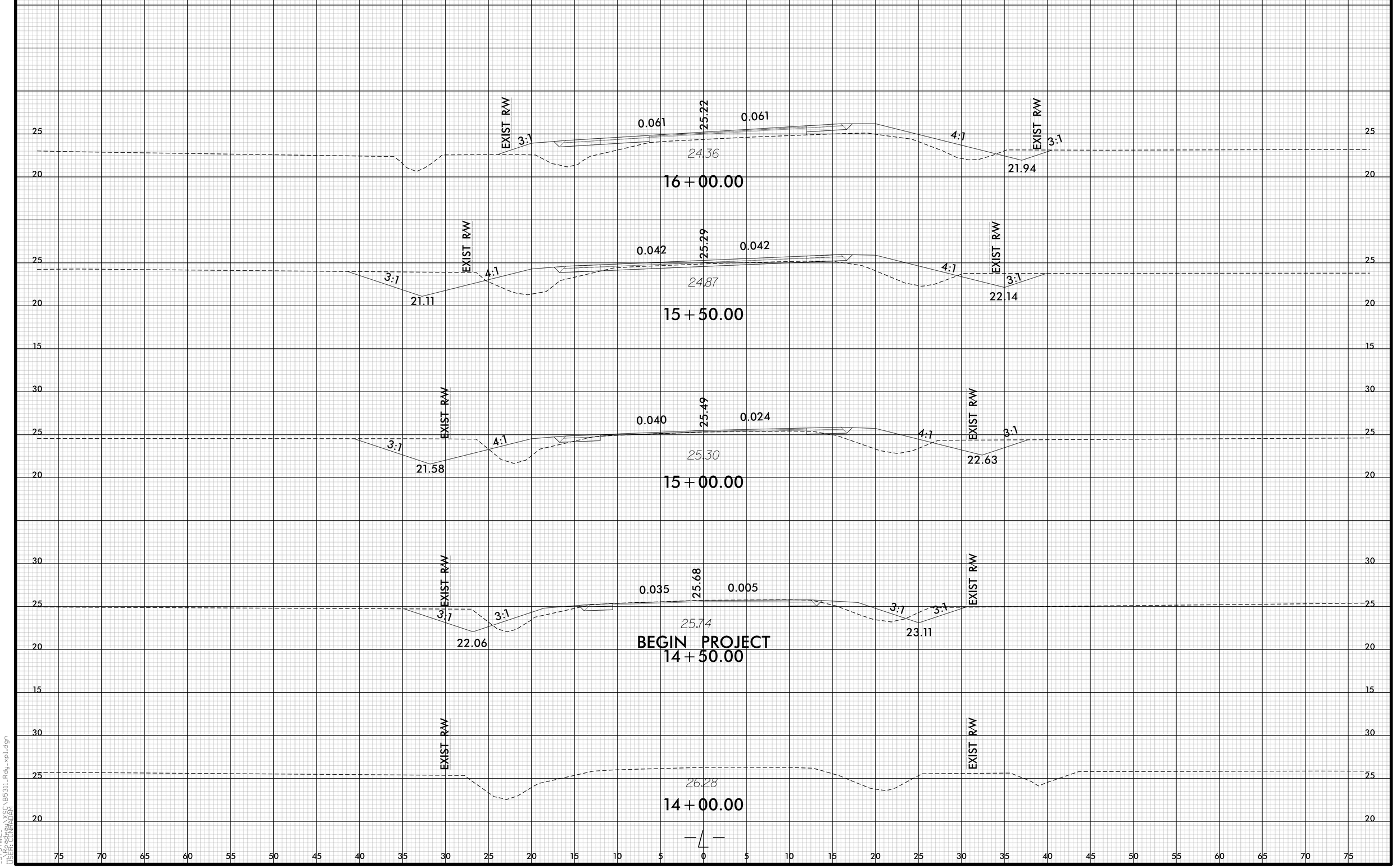

6/23/16

-SYSTIME-
...\Roadway\XSC\B5311_Rdy_xpl.dgn
USER: CONRADAM

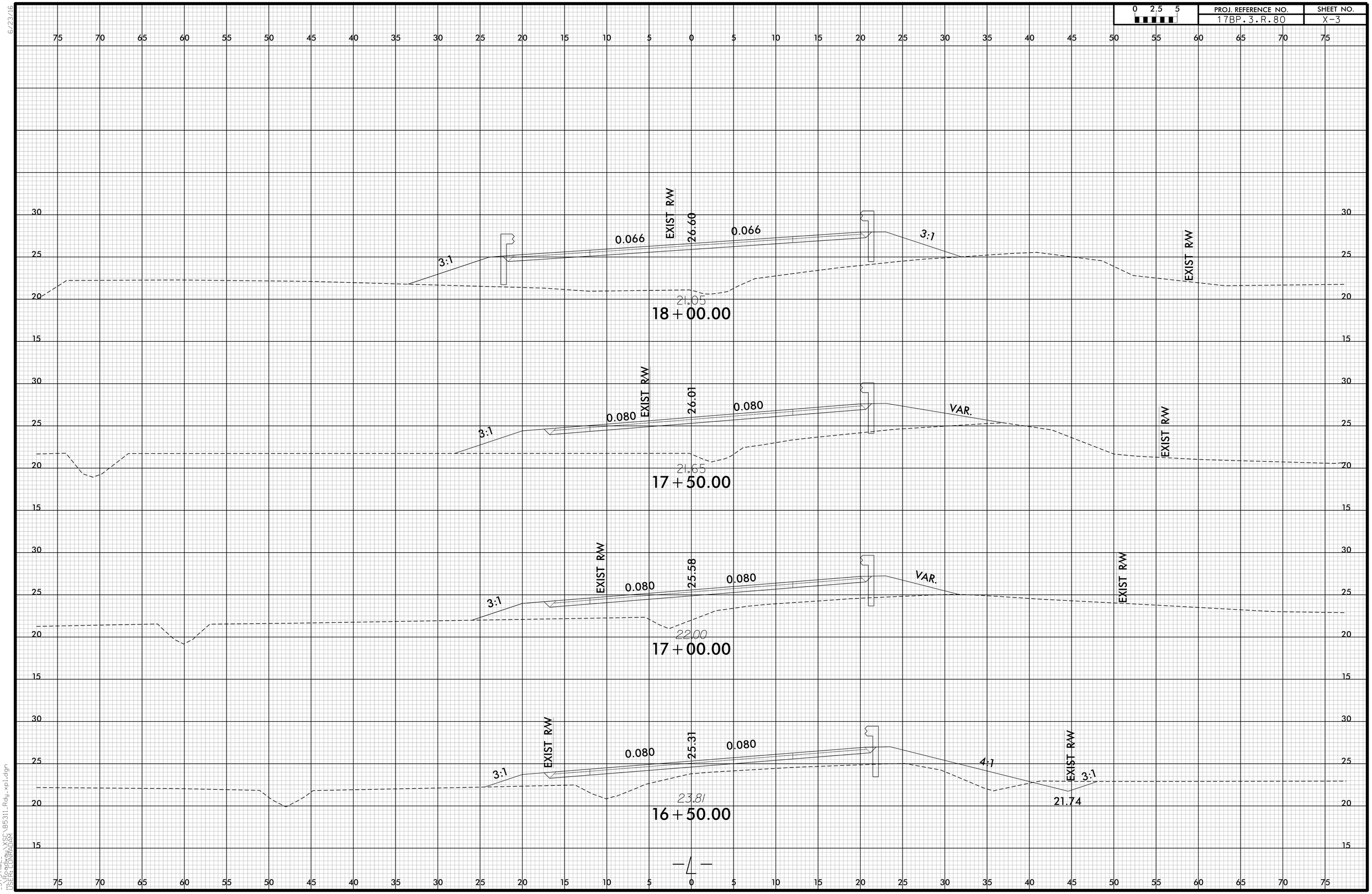

0 2.5 5
PROJ. REFERENCE NO.
17BP.3.R.80
SHEET NO.
X-3
EXIST R/W
26.60
0.066
0.066
3:1
3:1
21.05
18+00.00
EXIST R/W
26.01
0.080
0.080
3:1
VAR.
21.65
17+50.00
EXIST R/W
25.58
0.080
0.080
3:1
VAR.
22.00
17+00.00
EXIST R/W
25.31
0.080
0.080
3:1
4:1
3:1
21.74
23.81
16+50.00
-L-

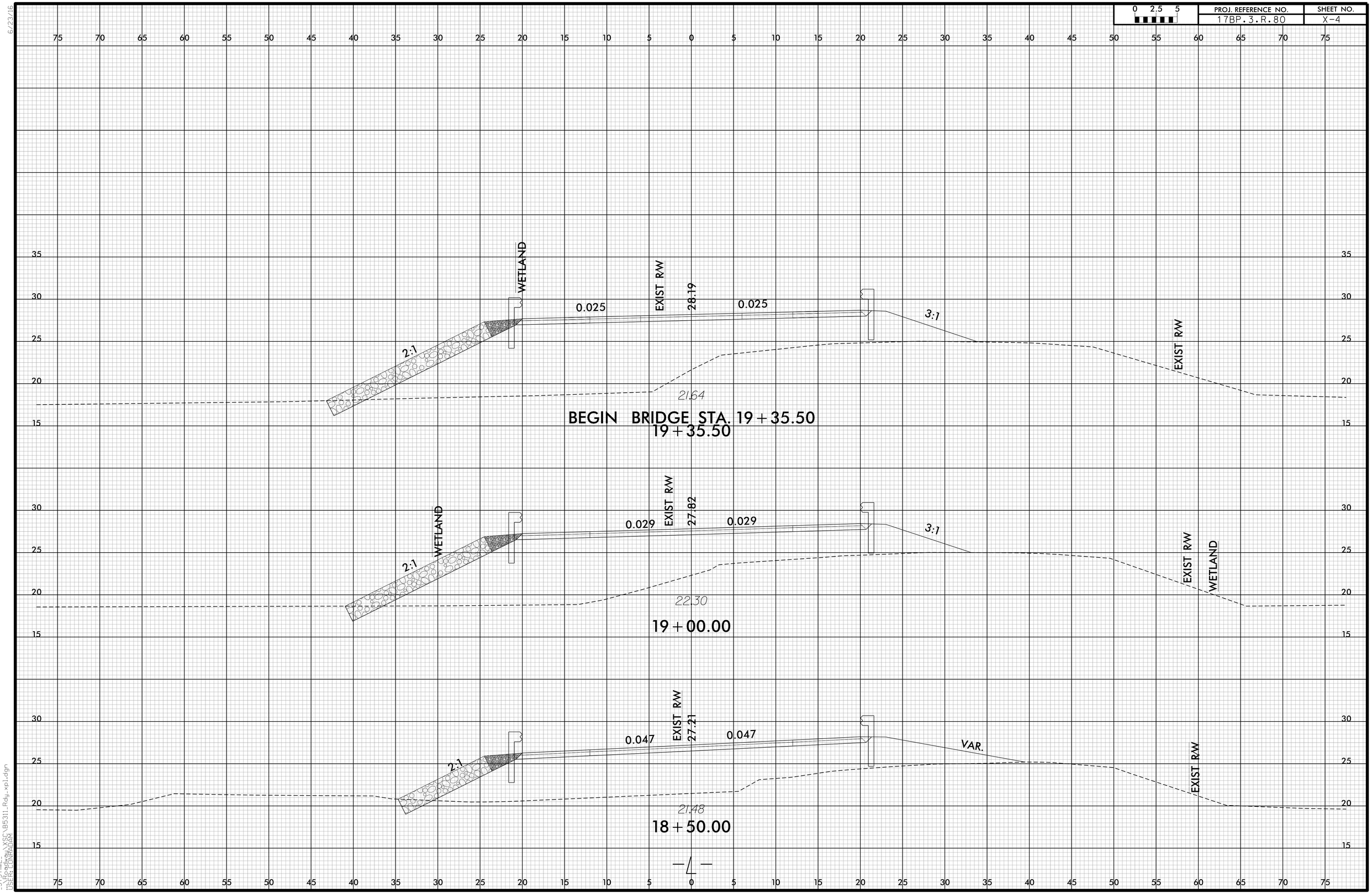

0 2.5 5
PROJ. REFERENCE NO.
17BP.3.R.80
SHEET NO.
X-4
WETLAND
EXIST R/W
28.19
0.025
0.025
2:1
3:1
EXIST R/W
21.64
BEGIN BRIDGE STA. 19+35.50
19+35.50
EXIST R/W
27.82
0.029
0.029
WETLAND
2:1
3:1
EXIST R/W
WETLAND
22.30
19+00.00
EXIST R/W
27.21
0.047
0.047
2:1
VAR.
EXIST R/W
21.48
18+50.00

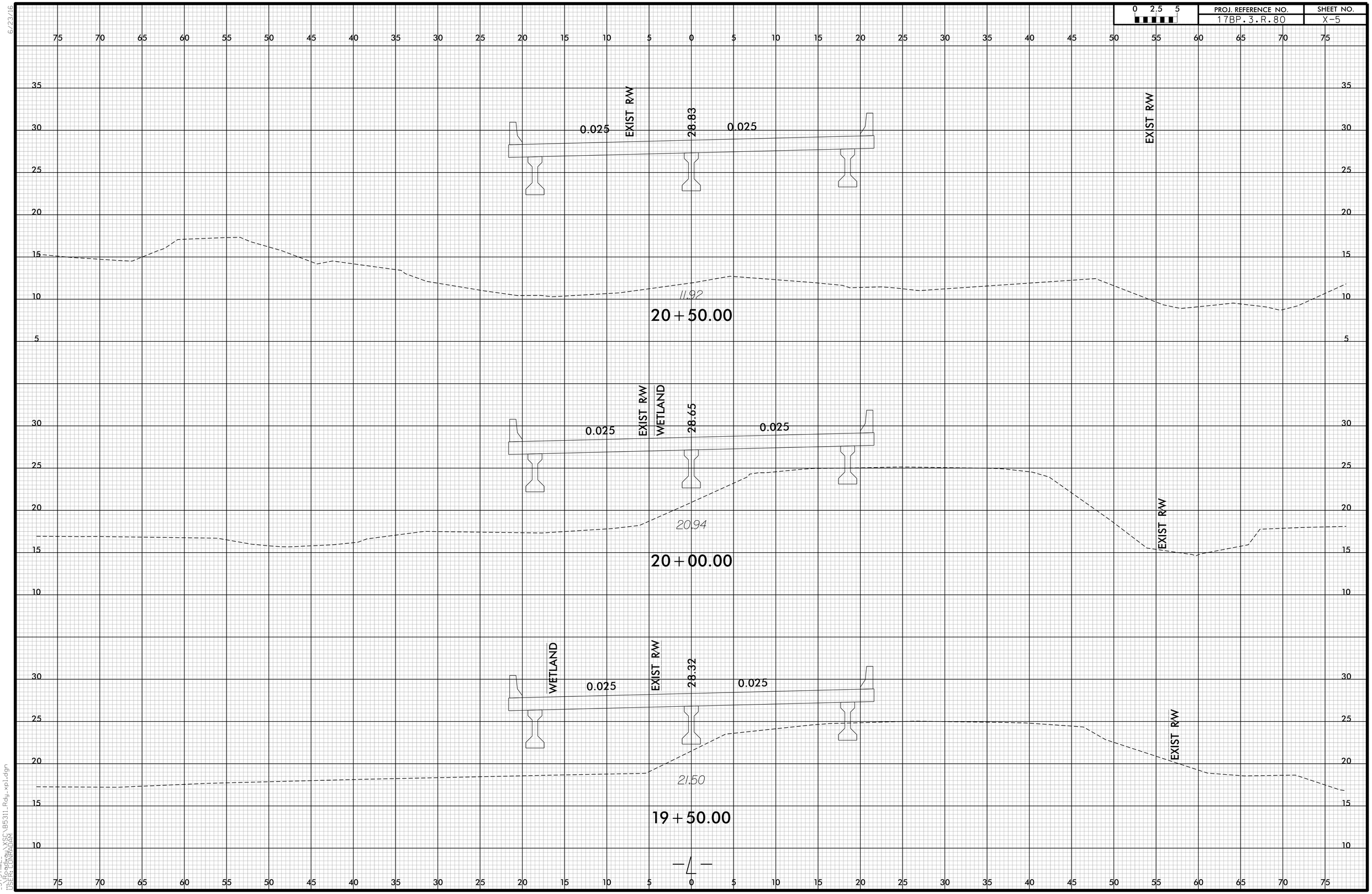

6/23/16

-SYSTIME-
-\Roadway\XSC\B5311_Rdy_xpl.dgn
USER: CONRADAM

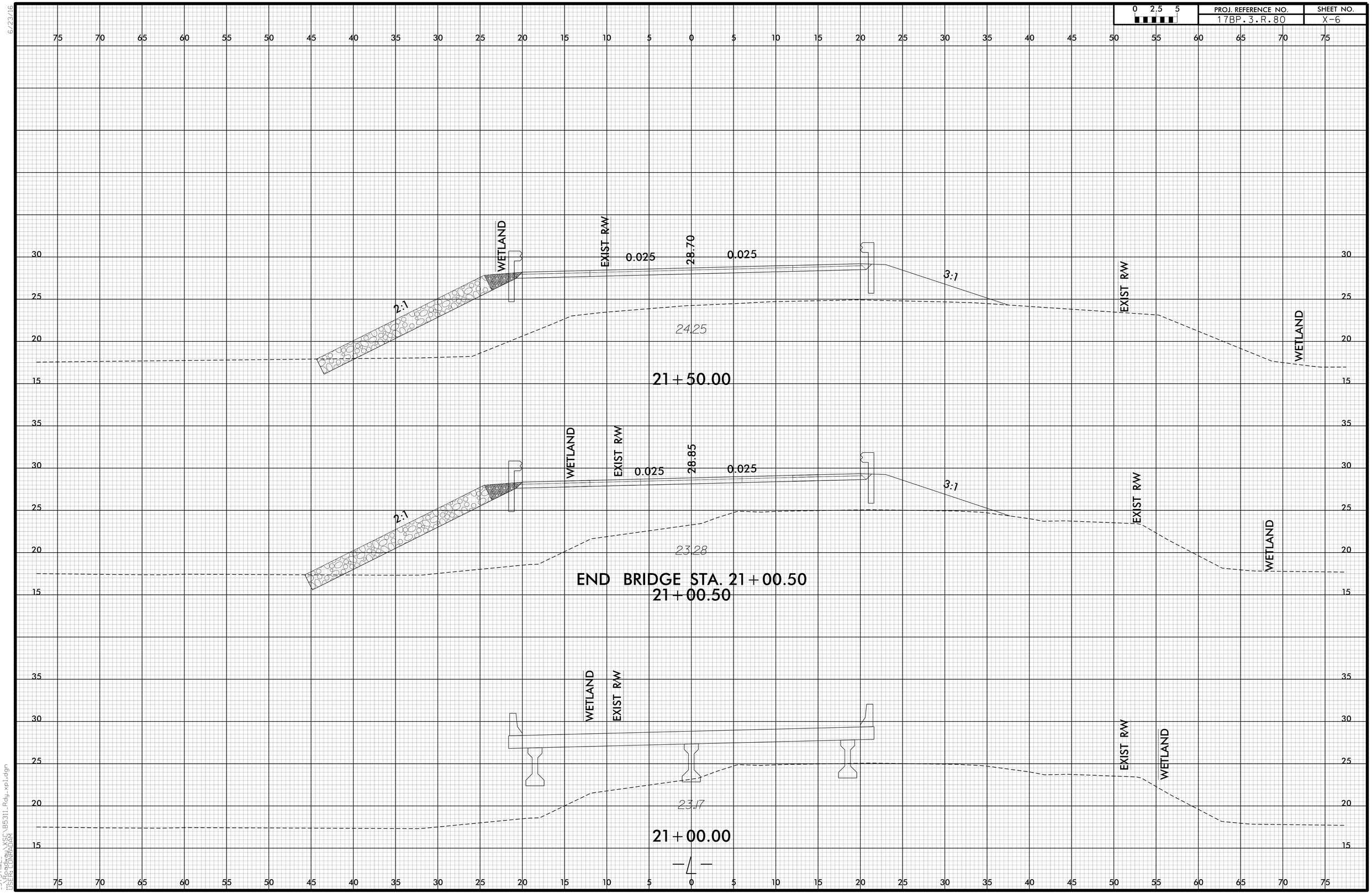

6/23/16

-SYSTIME-
...\Roadway\XSC\B5311_Rdy_xpl.dgn
USER: CONRADAM

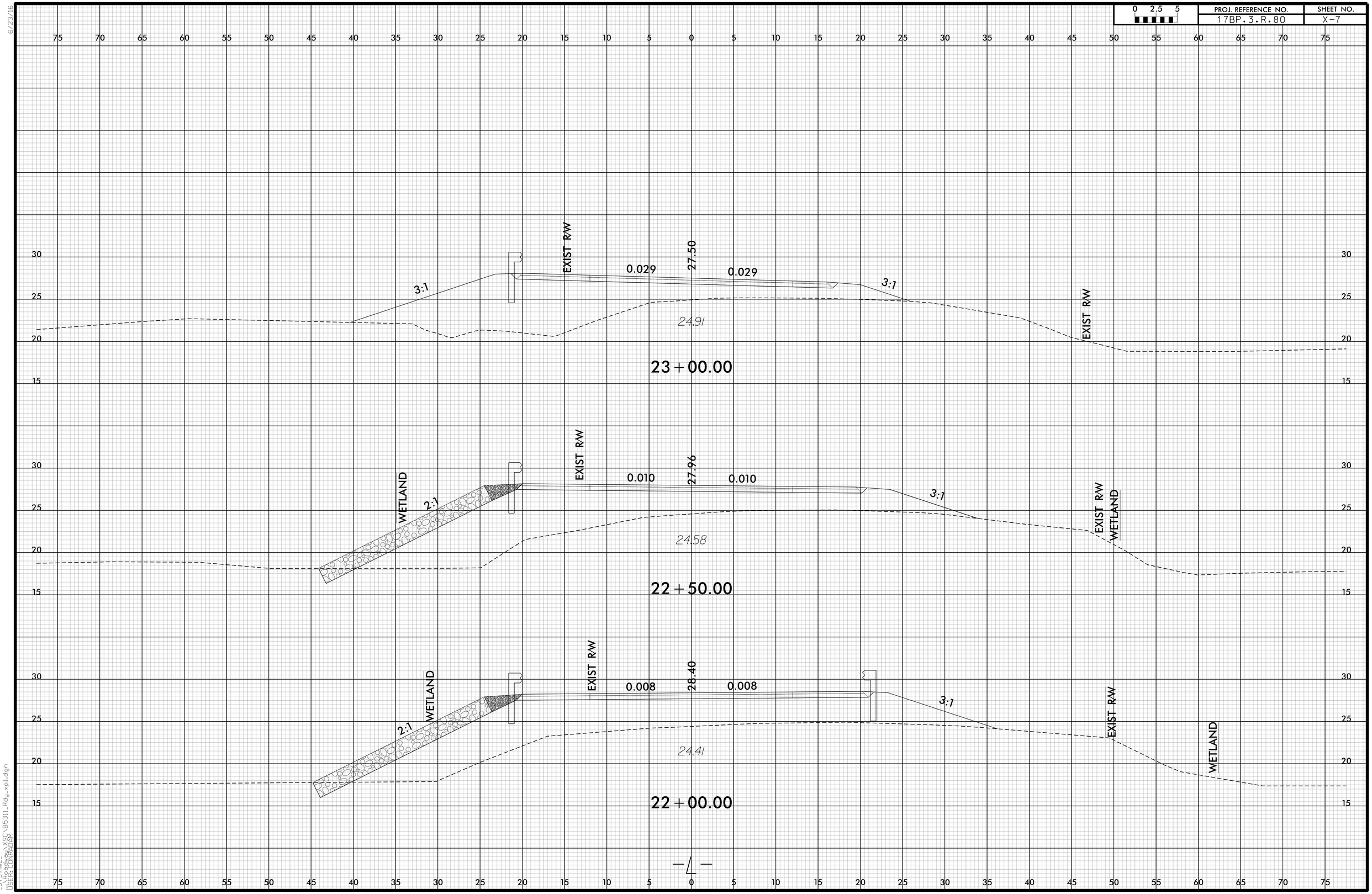

6/23/16

-SYSTIME-
...\Roadway\XSC\B5311_Rdy_xpl.dgn
USER: CONRADAM

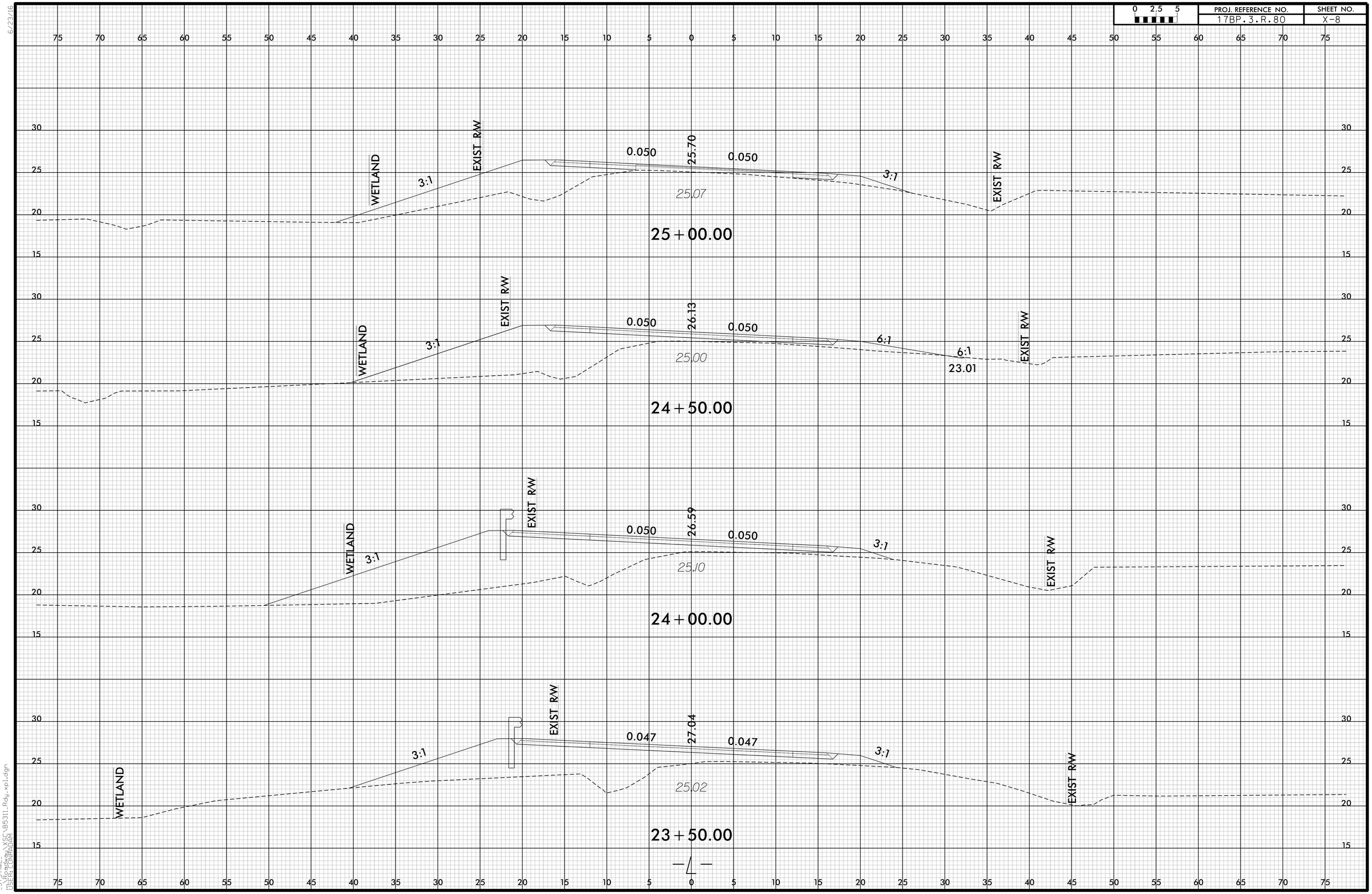

6/23/16

SYSTIME_
...\Roadway\XSC\B5311_Rdy_xpl.dgn
USER: CONRADAM

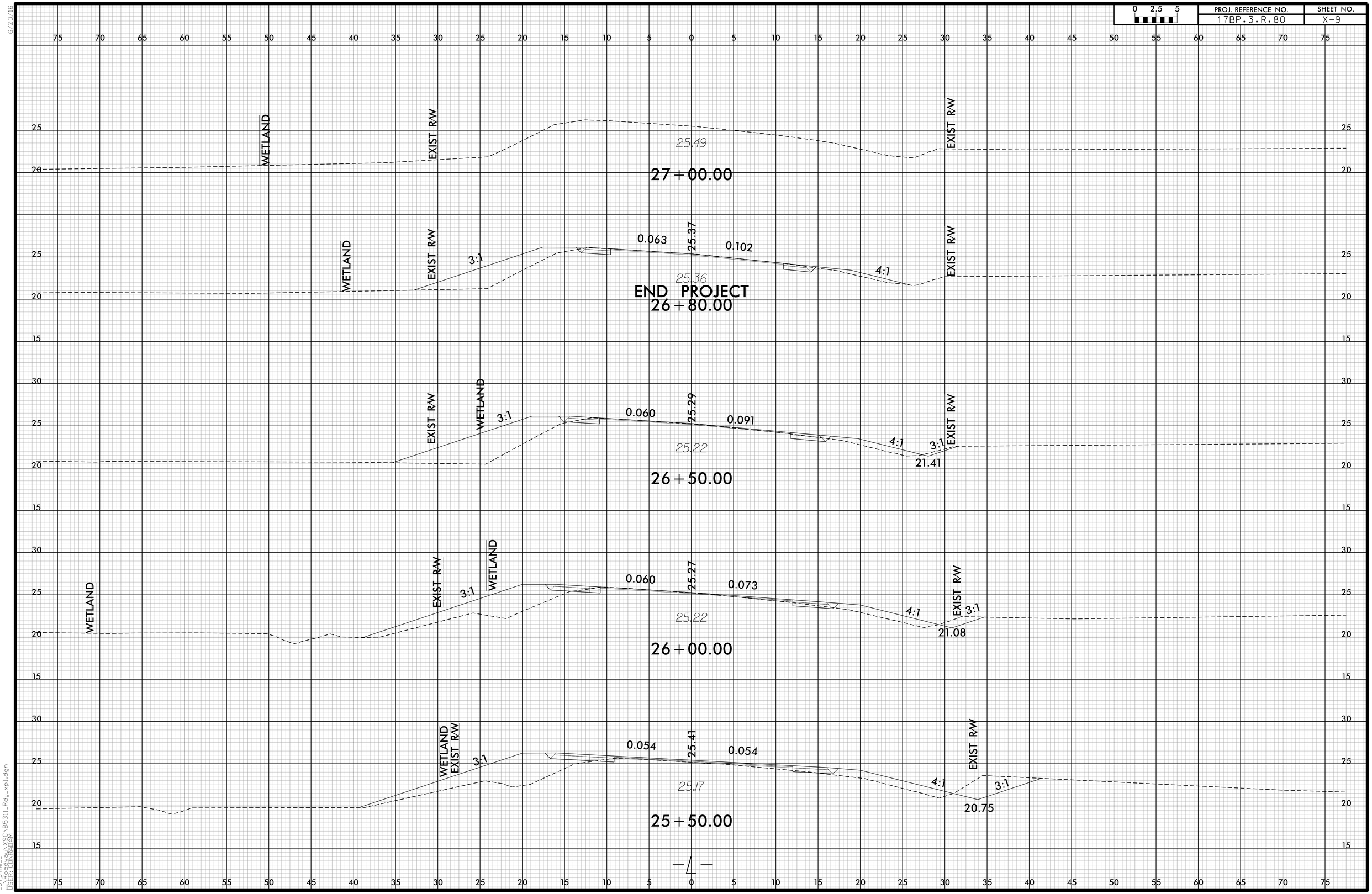

0 2.5 5
PROJ. REFERENCE NO.
17BP.3.R.80
SHEET NO.
X-9
WETLAND
EXIST R/W
25.49
27+00.00
3:1
0.063
25.37
0.102
4:1
25.36
END PROJECT
26+80.00
0.060
25.29
0.091
25.22
21.41
26+50.00
0.060
25.27
0.073
25.22
21.08
26+00.00
0.054
25.41
0.054
25.17
20.75
25+50.00

DocuSign Envelope ID: D314996B-70B0-416A-8652-4655FBDE714F

PROJECT: 17BP.3.R.80

CONTRACT: DC00314

STRUCTURE

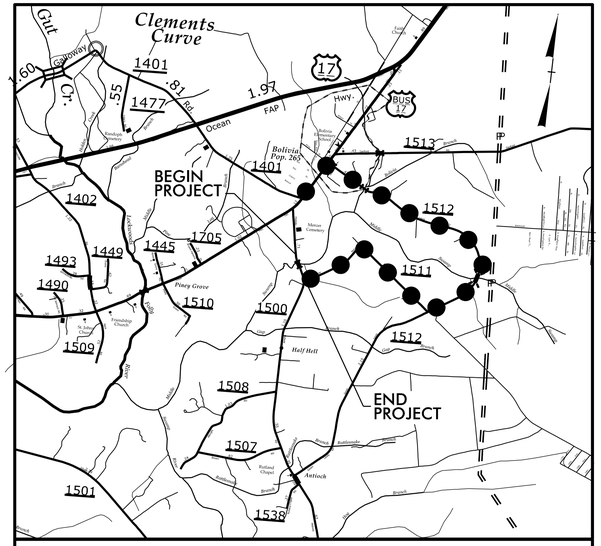

VICINITY MAP

OFF–SITE DETOUR ROUTE

STATE OF NORTH CAROLINA
DIVISION OF HIGHWAYS

BRUNSWICK COUNTY

STATE	STATE PROJECT REFERENCE NO.	SHEET NO.	TOTAL SHEETS
N.C.	17BP.3.R.80 (FORMERLY B–5311)		27

STATE PROJ. NO.	F. A. PROJ. NO.	DESCRIPTION
17BP.3.PE.80	N/A	P.E.
17BP.3.ROW.80	N/A	UTIL & R/W
17BP.3.R.80	N/A	CONST.

LOCATION: REPLACE BRIDGE 104 OVER MIDDLE SWAMP ON NC 906 (MIDWAY ROAD SE)

TYPE OF WORK: GRADING, DRAINAGE, PAVING, AND STRUCTURE

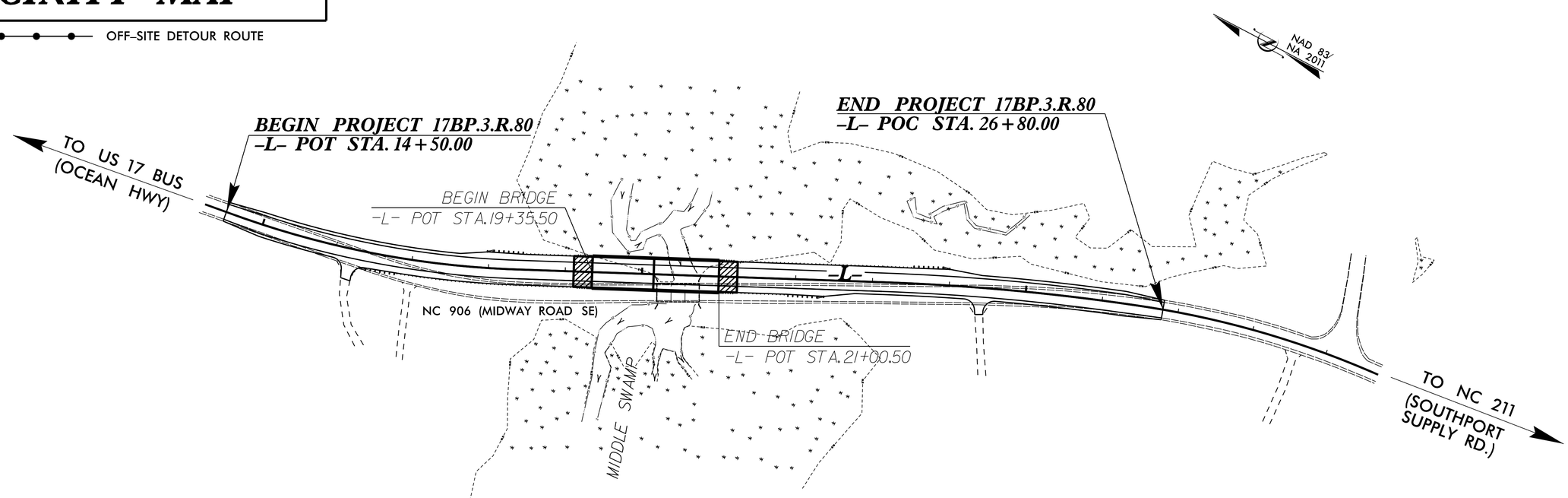

STATE OF NORTH CAROLINA DEPARTMENT OF TRANSPORTATION

DESIGN DATA

ADT 2021 = 5924 VPD
ADT 2040 = 9800 VPD
DHV = 9 %
D = 55 %
T = 5 %
V = 60 MPH
TTST = 1% DUALS = 4%
FUNC CLASS =
MAJOR COLLECTOR
REGIONAL TIER

PROJECT LENGTH

LENGTH ROADWAY TIP PROJECT 17BP.3.R.80 = 0.202 MILES

LENGTH STRUCTURE TIP PROJECT 17BP.3.R.80 = 0.031 MILES

TOTAL LENGTH OF TIP PROJECT 17BP.3.R.80 = 0.233 MILES

Prepared In the Office of:
CDM Smith
CDM SMITH
5400 Glenwood Avenue, Suite 400
Raleigh, NC 27612–3228
NC COA No. F–1255

FOR THE NORTH CAROLINA DEPARTMENT OF TRANSPORTATION

2018 STANDARD SPECIFICATIONS

LETTING DATE : JULY 21, 2022

DAVID Z. KEISER, P.E.
PROJECT ENGINEER

TING H. FANG, P.E.
PROJECT DESIGN ENGINEER

NORTH CAROLINA PROFESSIONAL SEAL 16301 ENGINEER TING HSIUNG FANG
Ting Fang
60E43C9AEA60462...
6/1/2022

DocuSign Envelope ID: 2BDD4FF0-40BD-4345-9C22-912B7DC6BCB1

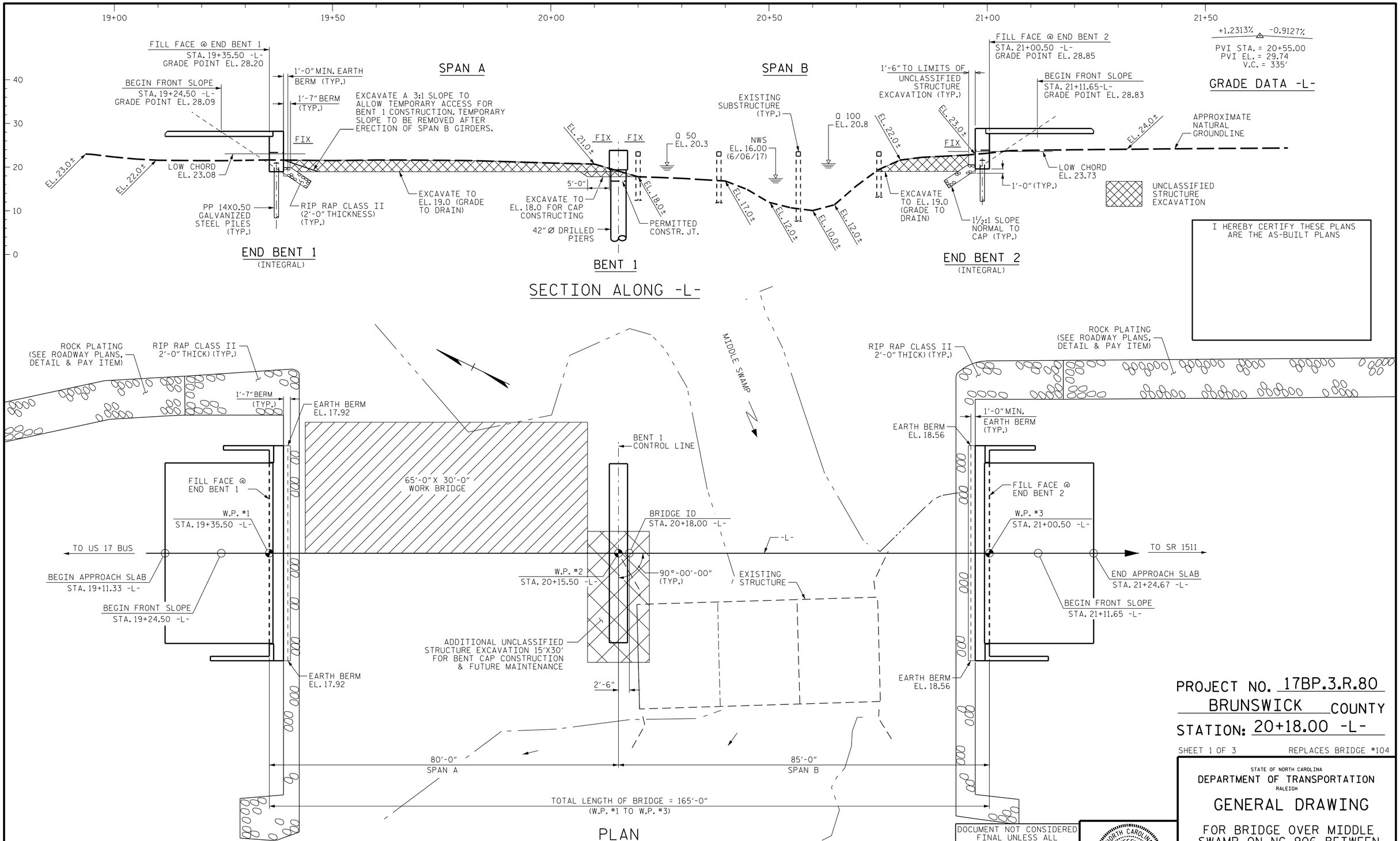

I HEREBY CERTIFY THESE PLANS ARE THE AS-BUILT PLANS

PROJECT NO. 17BP.3.R.80
BRUNSWICK COUNTY
STATION: 20+18.00 -L-

SHEET 1 OF 3 REPLACES BRIDGE #104

DOCUMENT NOT CONSIDERED FINAL UNLESS ALL SIGNATURES COMPLETED

CDM Smith
CDM SMITH
5400 Glenwood Avenue, Suite 400
Raleigh, NC 27612-3228
NC COA No. F-1255

DRAWN BY : JJR DATE : 04/21
CHECKED BY : THF DATE : 06/21
DESIGN ENGINEER : VDK DATE : 07/21

DWG. No.

NORTH CAROLINA PROFESSIONAL SEAL 16301 ENGINEER TING HSILING FANG
Ting H. Fang 1/3/2022
DocuSigned by: 6DE7E5D4F9AA469...

STATE OF NORTH CAROLINA
DEPARTMENT OF TRANSPORTATION
RALEIGH

GENERAL DRAWING

FOR BRIDGE OVER MIDDLE SWAMP ON NC 906 BETWEEN US 17 BUS AND SR 1511

REVISIONS						SHEET NO.
NO.	BY:	DATE:	NO.	BY:	DATE:	S-01
1			3			TOTAL SHEETS
2			4			26

FILE: SFILES
DATE: SDATES STIMES

DocuSign Envelope ID: 2BDD4FF0-40BD-4345-9C22-912B7DC6BCB1

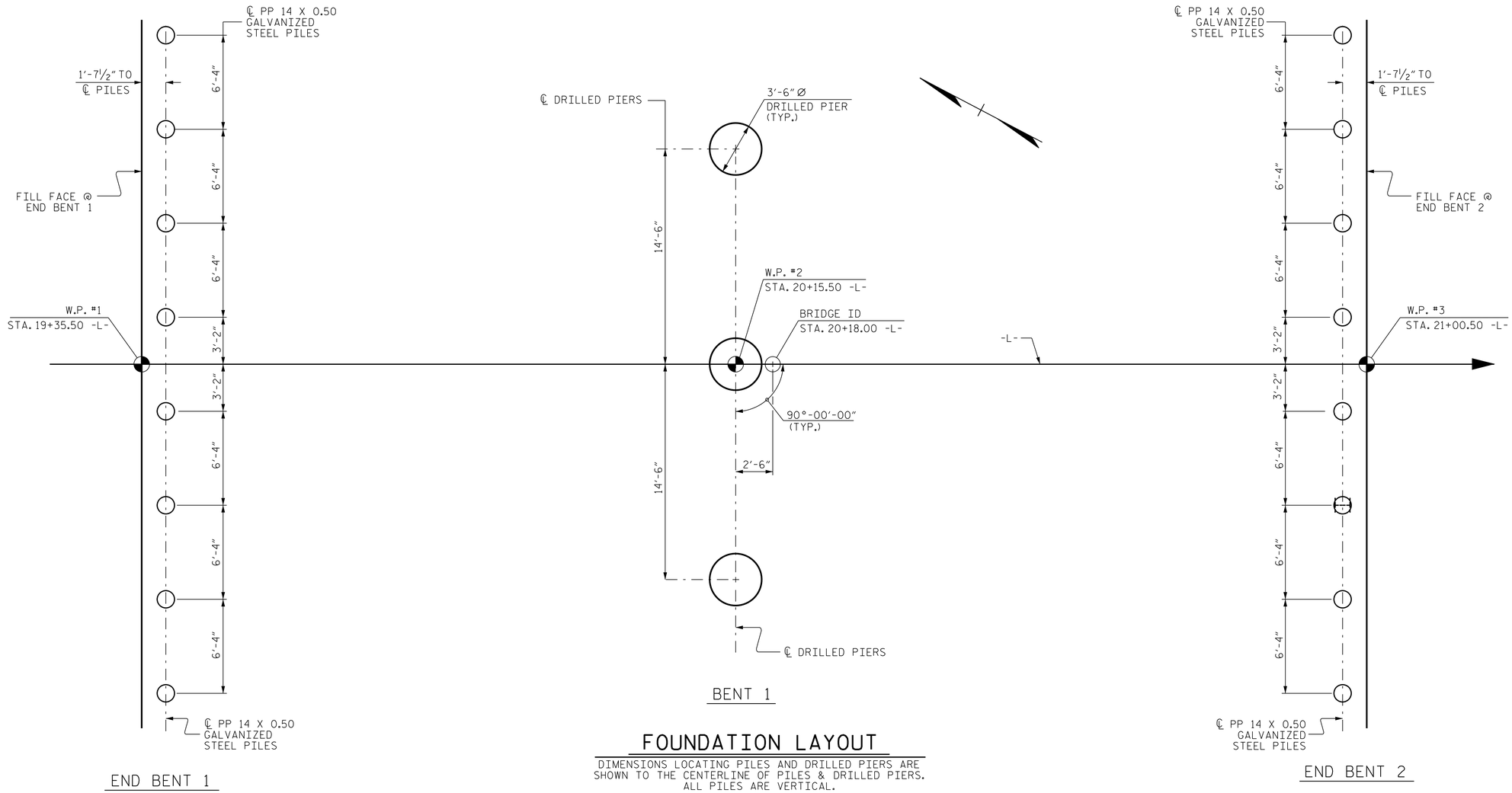

END BENT 1

BENT 1

END BENT 2

FOUNDATION LAYOUT

DIMENSIONS LOCATING PILES AND DRILLED PIERS ARE SHOWN TO THE CENTERLINE OF PILES & DRILLED PIERS. ALL PILES ARE VERTICAL.

NOTES

FOR PILES, SEE SECTION 450 OF THE STANDARD SPECIFICATIONS.

PILES AT END BENT 1 AND END BENT 2 ARE DESIGNED FOR A FACTORED RESISTANCE OF 100 TONS PER PILE.

DRIVE PILES AT END BENT 1 AND END BENT 2 TO A REQUIRED DRIVING RESISTANCE OF 170 TONS PER PILE.

PIPE PILE PLATES ARE REQUIRED FOR STEEL PIPE PILES AT END BENT 1 AND END BENT 2. USE PIPE PILE PLATES WITH A DIAMETER EQUAL TO THE PIPE PILE DIAMETER. FOR STEEL PIPE PILE PLATES, SEE SECTION 450 OF THE STANDARD SPECIFICATIONS.

TESTING THE FIRST PRODUCTION PILE WITH THE PDA DURING DRIVING, RESTRIKING OR REDRIVING IS REQUIRED AT END BENT 1 OR END BENT 2. FOR PDA TESTING, SEE SECTION 450 OF THE STANDARD SPECIFICATIONS.

OBSERVE A 1 MONTH WAITING PERIOD AFTER CONSTRUCTING THE EMBANKMENT TO WITHIN 2 FT OF FINISHED GRADE BEFORE BEGINNING END BENT CONSTRUCTION AT END BENT 2. FOR BRIDGE WAITING PERIODS, SEE ROADWAY PLANS AND SECTION 235 OF THE STANDARD SPECIFICATIONS.

FOR DRILLED PIERS, SEE SECTION 411 OF THE STANDARD SPECIFICATIONS.

DRILLED PIERS AT BENT 1 ARE DESIGNED FOR A FACTORED RESISTANCE OF 525 TONS PER PIER. CHECK FIELD CONDITIONS FOR THE REQUIRED TIP REISSTANCE OF 5 TSF.

INSTALL DRILLED PIERS AT BENT 1 TO A TIP ELEVATION NO HIGHER THAN -68 FT WITH THE REQUIRED TIP RESISTANCE.

THE SCOUR CRITICAL ELEVATION FOR BENT 1 IS ELEVATION 14.0 FT. SCOUR CRITICAL ELEVATIONS ARE USED TO MONITOR POSSIBLE SCOUR PROBLEMS DURING THE LIFE OF THE STRUCTURE.

SLURRY CONSTRUCTION IS REQUIRED FOR DRILLED PIERS AT BENT 1

SID INSPECTIONS MAY BE REQUIRED FOR DRILLED PIERS. THE ENGINEER WILL DETERMINE THE NEED FOR SID INSPECTIONS. FOR SID INSPECTIONS, SEE SECTION 411 OF THE STANDARD SPECIFICATIONS.

CSL TUBES ARE REQUIRED AND CSL TESTING MAY BE REQUIRED FOR DRILLED PIERS. THE ENGINEER WILL DETERMINE THE NEED FOR CSL TESTING. FOR CSL TESTING, SEE SECTION 411 OF THE STANDARD SPECIFICATIONS.

PROJECT NO. 17BP.3.R.80
BRUNSWICK COUNTY
STATION: 20+18.00 -L-

SHEET 2 OF 3

STATE OF NORTH CAROLINA
DEPARTMENT OF TRANSPORTATION
RALEIGH

GENERAL DRAWING

FOR BRIDGE OVER MIDDLE SWAMP ON NC 906 BETWEEN US 17 BUS AND SR 1511

DOCUMENT NOT CONSIDERED FINAL UNLESS ALL SIGNATURES COMPLETED

CDM Smith
CDM SMITH
5400 Glenwood Avenue, Suite 400
Raleigh, NC 27612-3228
NC COA No. F-1255

DRAWN BY : JJR DATE : 04/21
CHECKED BY : THF DATE : 06/21
DESIGN ENGINEER : VDK DATE : 07/21

DWG. No.

NORTH CAROLINA PROFESSIONAL SEAL 16301 ENGINEER TING HSIUNG FANG
Ting H. Fang
1/5/2022

REVISIONS						SHEET NO.
NO.	BY:	DATE:	NO.	BY:	DATE:	S-02
1			3			TOTAL SHEETS
2			4			26

FILE: SFILES
DATE: SDATES
STIMES

DocuSign Envelope ID: B5A6AF10-2E54-4A1A-94C2-3590FEA51862

TOTAL BILL OF MATERIAL

	CONST., MAINT. &REMOVAL OF TEMP. ACCESS	REMOVAL OF EXISTING STRUCTURE	ASBESTOS ASSESSMENT	3'-6" DIA DRILLED PIERS	PDA TESTING	SID INSPECTIONS	CSL TESTING	UNCLASSIFIED STRUCTURE EXCAVATION	REINFORCED CONCRETE DECK SLAB	GROOVING BRIDGE FLOORS	CLASS A CONCRETE	BRIDGE APPROACH SLABS	EPOXY COATED REINFORCING STEEL	EPOXY COATED SPIRAL COLUMN REINFORCING STEEL	45" PRESTRESSED CONCRETE GIRDERS		PILE DRIVING EQUIPMENT SETUP FOR PP 14 X 0.50 GALVANIZED STEEL PILES	PP 14 X 0.50 GALVANIZED STEEL PILES		STEEL PILE PLATES	PILE REDRIVES	CONCRETE BARRIER RAIL	RIP RAP CLASS II (2'-0" THICK)	GEOTEXTILE FOR DRAINAGE	ELASTOMERIC BEARINGS
	LUMP SUM	LUMP SUM	LUMP SUM	LIN. FT.	EA.	EA.	EA.	LUMP SUM	SQ. FT.	SQ. FT.	CU. YDS.	LUMP SUM	LBS.	LBS.	NO.	LIN. FT.	EA.	NO.	LIN. FT.	EA.	EA.	LIN. FT.	TON	SQ. YD.	LUMP SUM
SUPERSTRUCTURE									7,064	7,807					12	976.50						326.67			LUMP SUM
END BENT 1								LUMP SUM			35.7		5,554				8	8	360	8	4		122	135	
BENT 1				261.0				LUMP SUM			31.6		22,876	5,765											
END BENT 2								LUMP SUM			35.7		5,554				8	8	320	8	4		131	145	
TOTAL	LUMP SUM	LUMP SUM	LUMP SUM	261.0	1	1	1	LUMP SUM	7,064	7,807	103.0	LUMP SUM	33,984	5,765	12	976.50	16	16	680	16	8	326.67	253	280	LUMP SUM

B.M. #2: R/R SPIKE SET IN POWER POLE, 50.79' RIGHT OF STA. 21+04.52 -L-, EL. 24.89'

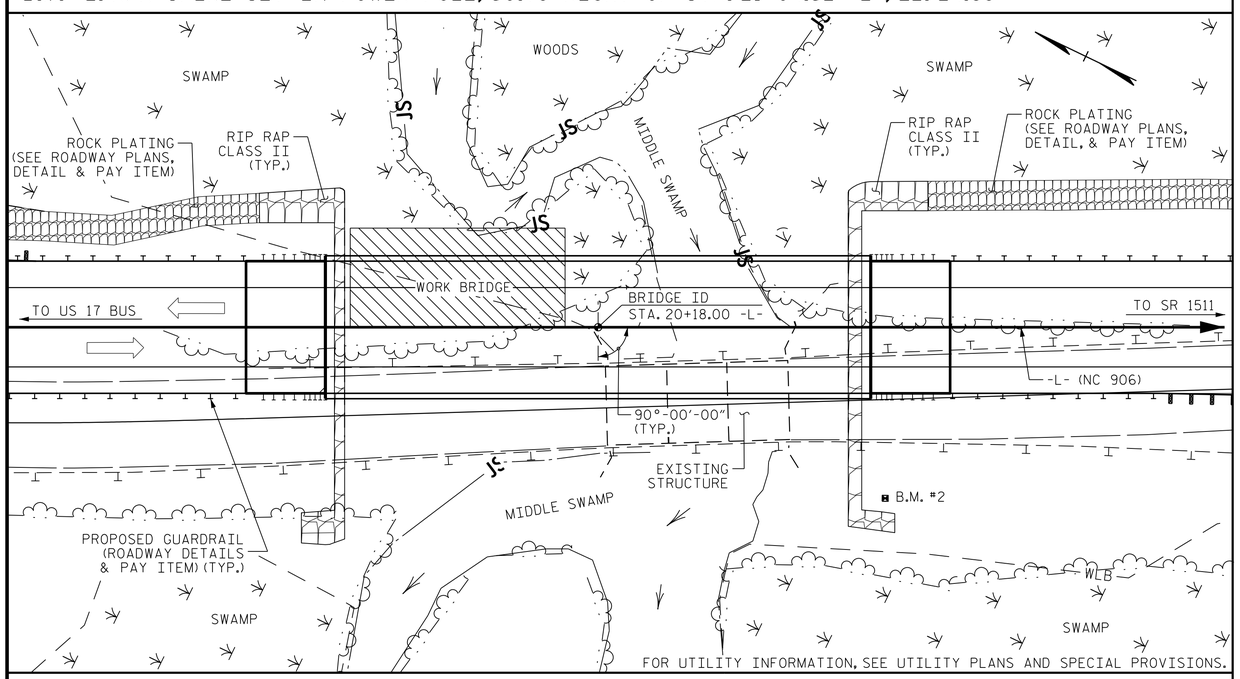

LOCATION SKETCH

HYDRAULIC DATA

DESIGN DISCHARGE	= 1000 CFS
FREQUENCY OF DESIGN FLOOD	= 50 YR.
DESIGN HIGH WATER ELEVATION	= 20.3 FT.
DRAINAGE AREA	= 7.5 SQ. MI.
BASE DISCHARGE (Q100)	= 1300 CFS
BASE HIGH WATER ELEVATION	= 20.8 FT.

OVERTOPPING FLOOD DATA

OVERTOPPING DISCHARGE	= 6100 CFS
FREQUENCY OF OVERTOPPING FLOOD	= 500+ YRS.
OVERTOPPING FLOOD ELEVATION	= 26.1 FT. *

* ELEVATION IS TAKEN AT STA. 26+20.53 -L-

NOTES:

ASSUMED LIVE LOAD = HL-93 OR ALTERNATE LOADING.

THIS BRIDGE HAS BEEN DESIGNED IN ACCORDANCE WITH THE AASHTO LRFD BRIDGE DESIGN SPECIFICATIONS

THIS BRIDGE IS LOCATED IN SEISMIC ZONE 2.

FOR OTHER DESIGN DATA AND GENERAL NOTES, SEE SHEET SN.
FOR EROSION CONTROL MEASURES SEE EROSION CONTROL PLANS.

THIS STRUCTURE HAS BEEN DESIGNED IN ACCORDANCE WITH "HEC-18 EVALUATING SCOUR AT BRIDGES".

REMOVAL OF THE EXISTING BRIDGE SHALL BE PERFORMED IN A MANNER THAT PREVENTS DEBRIS FROM FALLING INTO THE WATER. THE CONTRACTOR SHALL REMOVE THE BRIDGE AND SUBMIT PLANS FOR DEMOLITION IN ACCORDANCE WITH ARTICLE 402-2 OF THE STANDARD SPECIFICATIONS.

THE SUBSTRUCTURE OF THE EXISTING BRIDGE INDICATED ON THE PLANS IS FROM THE BEST INFORMATION AVAILABLE. SINCE THIS INFORMATION IS SHOWN FOR THE CONVENIENCE OF THE CONTRACTOR, THE CONTRACTOR SHALL HAVE NO CLAIM WHATSOEVER AGAINST THE DEPARTMENT OF TRANSPORTATION FOR ANY DELAYS OR ADDITIONAL COST INCURRED BASED ON DIFFERENCES BETWEEN THE EXISTING BRIDGE SUBSTRUCTURE SHOWN ON THE PLANS AND THE ACTUAL CONDITIONS AT THE PROJECT SITE.

FOR END BENTS 1 & 2, ONLY PARTIAL GALVANIZING OF THE PILES IS REQUIRED. SEE END BENT SHEETS FOR REQUIRED GALVANIZED LENGTHS. PAYMENT FOR PARTIALLY GALVANIZED PILES WILL BE MADE UNDER THE CONTRACT UNIT PRICE FOR GALVANIZED STEEL PILES.

THE CLASS AA CONCRETE IN THE BRIDGE DECK SHALL CONTAIN FLY ASH OR GROUND GRANULATED BLAST FURNACE SLAG AT THE SUBSTITUTION RATE SPECIFIED IN ARTICLE 1024-1 AND IN ACCORDANCE WITH ARTICLES 1024-5 AND 1024-6 OF THE STANDARD SPECIFICATIONS. NO PAYMENT WILL BE MADE FOR THIS SUBSTITUTION AS IT IS CONSIDERED INCIDENTAL TO THE COST OF THE REINFORCED CONCRETE DECK SLAB.

THIS STRUCTURE CONTAINS THE NECESSARY CORROSION PROTECTION REQUIRED FOR A CORROSIVE SITE.

ALL METALLIZED SURFACES SHALL RECEIVE A SEAL COATING AS SPECIFIED IN THE SPECIAL PROVISION FOR THERMAL SPRAYED COATINGS (METALLIZATION).

CLASS AA CONCRETE SHALL BE USED IN ALL CAST-IN-PLACE COLUMNS, BENT CAPS AND PILE CAPS, SHALL CONTAIN CALCIUM NITRITE CORROSION INHIBITOR. FOR CALCIUM NITRITE CORROSION INHIBITOR, SEE SPECIAL PROVISIONS.

ALL BAR SUPPORTS AND ALL INCIDENTAL REINFORCING STEEL SHALL BE EPOXY COATED IN ACCORDANCE THE STANDARD SPECIFICATIONS.

THE CONCRETE IN THE END BENT AND BENT CAPS OF BENT 1 SHALL CONTAIN SILICA FUME. SILICA FUME SHALL BE SUBSTITUTED FOR 5% OF THE PORTLAND CEMENT BY WEIGHT. IF THE OPTION OF ARTICLE 1024-1 OF THE STANDARD SPECIFICATIONS TO PARTIALLY SUBSTITUTE CLASS F FLY ASH FOR PORTLAND CEMENT IS EXERCISED, THEN THE RATE OF FLY ASH SUBSTITUTION SHALL BE REDUCED TO 1.0 LB OF FLY ASH PER 1.0 LB. NO PAYMENT WILL BE MADE FOR THIS SUBSTITUTION AS IT IS CONSIDERED INCIDENTAL TO THE VARIOUS PAY ITEMS.

THE MATERIAL SHOWN IN THE CROSS-HATCHED AREA SHALL BE EXCAVATED FOR A DISTANCE OF 5 FT. LEFT SIDE AND 65 FT. RIGHT SIDE OF CENTERLINE ROADWAY AT END BENT 1 AND 14 FT. LEFT SIDE AND 60 FT. RIGHT SIDE OF CENTERLINE ROADWAY AT END BENT 2 AS DIRECTED BY THE ENGINEER. THIS WORK WILL BE PAID FOR AT THE CONTRACT LUMP SUM PRICE FOR UNCLASSIFIED STRUCTURE EXCAVATION. SEE SECTION 412 OF THE STANDARD SPECIFICATIONS.

THE EXISTING STRUCTURE CONSISTING OF 3 SPANS: 1 @ 18'-5", 1 @ 18'-3" AND 1 @ 18'-6" WITH A CLEAR ROADWAY WIDTH OF 24'-0" AND A 5" REINFORCED CONCRETE DECK ON 12 LINES OF W12X16.5; SUBSTRUCTURE CONSISTING OF RC CAPS ON TIMBER PILES AT END BENTS AND BENT 2, BENT 1 WITH STEEL CAP AND PILE CRUTCHES LOCATED AT THE SITE OF THE PROPOSED BRIDGE SHALL BE REMOVED. THE EXISTING BRIDGE IS PRESENTLY POSTED FOR LOAD LIMIT. SHOULD THE STRUCTURAL INTEGRITY OF THE BRIDGE DETERIORATE DURING CONSTRUCTION OF THE PROPOSED BRIDGE, A LOAD LIMIT MAY BE POSTED AND MAY BE REDUCED AS FOUND NECESSARY DURING THE LIFE OF THE PROJECT.

FOR REMOVAL OF EXISTING STRUCTURE, SEE SPECIAL PROVISIONS.

NEEDLE BEAMS WILL NOT BE ALLOWED UNLESS OTHERWISE CALLED FOR ON THE PLANS OR APPROVED BY THE ENGINEER.

INASMUCH AS THE PAINT SYSTEM ON THE EXISTING STRUCTURAL STEEL CONTAINS LEAD, THE CONTRACTOR'S ATTENTION IS DIRECTED TO ARTICLE 107-1 OF THE STANDARD SPECIFICATIONS. ANY COSTS RESULTING FROM COMPLIANCE WITH APPLICABLE STATE OR FEDERAL REGULATIONS PERTAINING TO HANDLING OF MATERIALS CONTAINING LEAD BASED PAINT SHALL BE INCLUDED IN THE BID PRICE FOR "REMOVAL OF EXISTING STRUCTURE AT STATION 20+18.00 -L-."

FOR FALSEWORK AND FORMWORK, SEE SPECIAL PROVISIONS.

FOR SUBMITTAL OF WORKING DRAWINGS, SEE SPECIAL PROVISIONS.

FOR CRANE SAFETY, SEE SPECIAL PROVISIONS.

FOR GROUT FOR STRUCTURES, SEE SPECIAL PROVISIONS.

FOR BRIDGE APPROACH FILLS TYPE 5 GEOTEXTILE, SEE SPECIAL PROVISIONS.

FOR CONSTRUCTION, MAINTENANCE & REMOVAL OF TEMPORARY ACCESS, SEE SPECIAL PROVISIONS.

FOR ASBESTOS ASSESSMENT FOR BRIDGE DEMOLITION AND RENOVATION ACTIVITIES, SEE SPECIAL PROVISIONS.

PROJECT NO. 17BP.3.R.80
BRUNSWICK COUNTY
STATION: 20+18.00 -L-

SHEET 3 OF 3

STATE OF NORTH CAROLINA
DEPARTMENT OF TRANSPORTATION
RALEIGH

GENERAL DRAWING
FOR BRIDGE OVER MIDDLE SWAMP ON NC 906 BETWEEN BUS 17 AND SR 1511

DOCUMENT NOT CONSIDERED FINAL UNLESS ALL SIGNATURES COMPLETED

CDM Smith
CDM SMITH
5400 Glenwood Avenue, Suite 400
Raleigh, NC 27612-3228
NC COA No. F-1255

DRAWN BY : JJR DATE : 04/21
CHECKED BY : THF DATE : 06/21
DESIGN ENGINEER : VDK DATE : 07/21

DWG. No.

NORTH CAROLINA PROFESSIONAL SEAL 16301 ENGINEER TING HSIUNG FANG
Ting Fang
60E43C9AEA80462...
4/20/2022

REVISIONS						SHEET NO.
NO.	BY:	DATE:	NO.	BY:	DATE:	S-03
1			3			TOTAL SHEETS
2			4			26

FILE: SFILES
DATE: $DATE$ $TIME$

DocuSign Envelope ID: 2BDD4FF0-40BD-4345-9C22-912B7DC6BCB1

LOAD AND RESISTANCE FACTOR RATING (LRFD) SUMMARY FOR PRESTRESSED CONCRETE GIRDERS

LEVEL		VEHICLE	WEIGHT (W) (TONS)	CONTROLLING LOAD RATING	MINIMUM RATING FACTORS (RF)	TONS = W X RF	STRENGTH I LIMIT STATE											SERVICE III LIMIT STATE						COMMENT NUMBER
								MOMENT					SHEAR						MOMENT					
							LIVELOAD FACTORS	DISTRIBUTION FACTORS (DF)	RATING FACTOR	SPAN	GIRDER LOCATION	DISTANCE FROM LEFT END OF SPAN (ft)	DISTRIBUTION FACTORS (DF)	RATING FACTOR	SPAN	GIRDER LOCATION	DISTANCE FROM LEFT END OF SPAN (ft)	LIVELOAD FACTORS	DISTRIBUTION FACTORS (DF)	RATING FACTOR	SPAN	GIRDER LOCATION	DISTANCE FROM LEFT END OF SPAN (ft)	
DESIGN LOAD RATING		HL-93(Inv)	N/A	1	1.46	--	1.75	0.684	1.75	85′	EL	41.3	0.684	1.75	85′	EL	7.8	0.80	0.684	**1.46**	85′	EL	**41.3**	
		HL-93(Opr)	N/A	--	1.99	--	1.35	0.621	2.45	85′	I	41.3	0.777	1.99	85′	I	7.8	N/A	--	--	--	--	--	
		HS-20(Inv)	36.000	2	1.95	70.20	1.75	0.684	2.34	85′	EL	41.3	0.684	2.29	85′	EL	7.8	0.80	0.684	**1.95**	85′	EL	**41.3**	
		HS-20(Opr)	36.000	--	2.59	93.24	1.35	0.621	3.28	85′	I	41.3	0.777	2.59	85′	I	7.8	N/A	--	--	--	--	--	
LEGAL LOAD RATING	SV	SNSH	13.500	--	4.51	60.89	1.4	0.684	6.77	85′	EL	41.3	0.684	7.23	85′	EL	7.8	0.80	0.684	4.51	85′	EL	41.3	
		SNGARBS2	20.000	--	3.32	66.40	1.4	0.684	4.98	85′	EL	41.3	0.684	5.06	85′	EL	7.8	0.80	0.684	3.32	85′	EL	41.3	
		SNAGRIS2	22.000	--	3.13	68.86	1.4	0.684	4.69	85′	EL	41.3	0.684	4.67	85′	EL	7.8	0.80	0.684	3.13	85′	EL	41.3	
		SNCOTTS3	27.250	--	2.25	61.31	1.4	0.684	3.37	85′	EL	41.3	0.684	3.53	85′	EL	7.8	0.80	0.684	2.25	85′	EL	41.3	
		SNAGGRS4	34.925	--	1.86	64.96	1.4	0.684	2.79	85′	EL	41.3	0.684	2.88	85′	EL	7.8	0.80	0.684	1.86	85′	EL	41.3	
		SNS5A	35.550	--	1.82	64.70	1.4	0.684	2.73	85′	EL	41.3	0.684	2.90	85′	EL	7.8	0.80	0.684	1.82	85′	EL	41.3	
		SNS6A	39.950	--	1.66	66.32	1.4	0.684	2.49	85′	EL	41.3	0.684	2.62	85′	EL	7.8	0.80	0.684	1.66	85′	EL	41.3	
		SNS7B	42.000	--	1.58	66.36	1.4	0.684	2.37	85′	EL	41.3	0.684	2.57	85′	EL	7.8	0.80	0.684	1.58	85′	EL	41.3	
	TTST	TNAGRIT3	33.000	--	2.03	66.99	1.4	0.684	3.04	85′	EL	41.3	0.684	3.16	85′	EL	7.8	0.80	0.684	2.03	85′	EL	41.3	
		TNT4A	33.075	--	2.03	67.14	1.4	0.684	3.05	85′	EL	41.3	0.684	3.09	85′	EL	7.8	0.80	0.684	2.03	85′	EL	41.3	
		TNT6A	41.600	--	1.65	68.64	1.4	0.684	2.48	85′	EL	41.3	0.684	2.72	85′	EL	7.8	0.80	0.684	1.65	85′	EL	41.3	
		TNT7A	42.000	--	1.66	69.72	1.4	0.684	2.49	85′	EL	41.3	0.684	2.66	85′	EL	7.8	0.80	0.684	1.66	85′	EL	41.3	
		TNT7B	42.000	--	1.71	71.82	1.4	0.684	2.56	85′	EL	41.3	0.684	2.50	85′	EL	7.8	0.80	0.684	1.71	85′	EL	41.3	
		TNAGRIT4	43.000	--	1.63	70.09	1.4	0.684	2.45	85′	EL	41.3	0.684	2.43	85′	EL	7.8	0.80	0.684	1.63	85′	EL	41.3	
		TNAGT5A	45.000	--	1.54	69.30	1.4	0.684	2.31	85′	EL	41.3	0.684	2.40	85′	EL	7.8	0.80	0.684	1.54	85′	EL	41.3	
		TNAGT5B	45.000	3	1.53	68.86	1.4	0.684	2.29	85′	EL	41.3	0.684	2.31	85′	EL	7.8	0.80	0.684	**1.53**	85′	EL	**41.3**	

LOAD FACTORS:

DESIGN LOAD RATING FACTORS	LIMIT STATE	γ_{DC}	γ_{DW}
	STRENGTH I	1.25	1.50
	SERVICE III	1.00	1.00

NOTES:

MINIMUM RATING FACTORS ARE BASED ON THE STRENGTH I AND SERVICE III LIMIT STATES.

ALLOWABLE STRESSES FOR SERVICE III LIMIT STATE ARE AS REQUIRED FOR DESIGN.

COMMENTS:

1.
2.
3.
4.

CONTROLLING LOAD RATING
1 DESIGN LOAD RATING (HL-93)
2 DESIGN LOAD RATING (HS-20)
3 LEGAL LOAD RATING **
** SEE CHART FOR VEHICLE TYPE
GIRDER LOCATION
I - INTERIOR GIRDER
EL - EXTERIOR LEFT GIRDER
ER - EXTERIOR RIGHT GIRDER

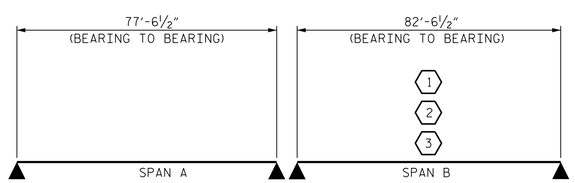

LRFR SUMMARY

PROJECT NO. 17BP.3.R.80
BRUNSWICK COUNTY
STATION: 20+18.00 -L-

DOCUMENT NOT CONSIDERED FINAL UNLESS ALL SIGNATURES COMPLETED

CDM Smith
CDM SMITH
5400 Glenwood Avenue, Suite 400
Raleigh, NC 27612-3228
NC COA No. F-1255

DRAWN BY : JJR DATE : 04/21
CHECKED BY : THF DATE : 06/21
DESIGN ENGINEER : VDK DATE : 07/21

DWG. No.

NORTH CAROLINA PROFESSIONAL SEAL 16301 ENGINEER TING HSIUNG FANG
DocuSigned by: Ting H. Fang
1/5/2022

STATE OF NORTH CAROLINA
DEPARTMENT OF TRANSPORTATION
RALEIGH
STANDARD
LRFR SUMMARY FOR PRESTRESSED CONCRETE GIRDERS
(NON-INTERSTATE TRAFFIC)

REVISIONS						SHEET NO.
NO.	BY:	DATE:	NO.	BY:	DATE:	S-04
1			3			TOTAL SHEETS
2			4			26

FILE: SFILES
DATE: SDATES
STYLES

STD. NO. LRFR1

DocuSign Envelope ID: 2BDD4FF0-40BD-4345-9C22-912B7DC6BCB1

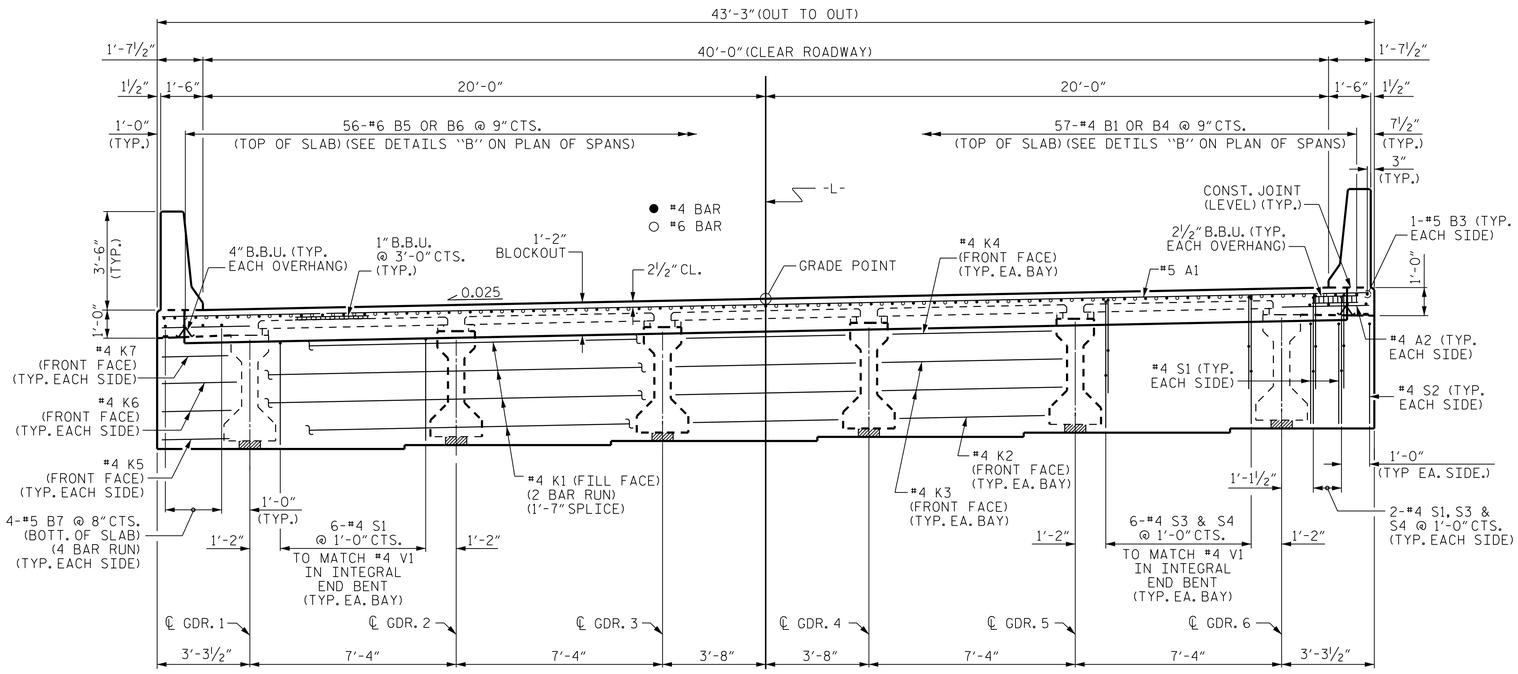

TYPICAL SECTION

SHOWING ABUTMENT WALL AT END BENT

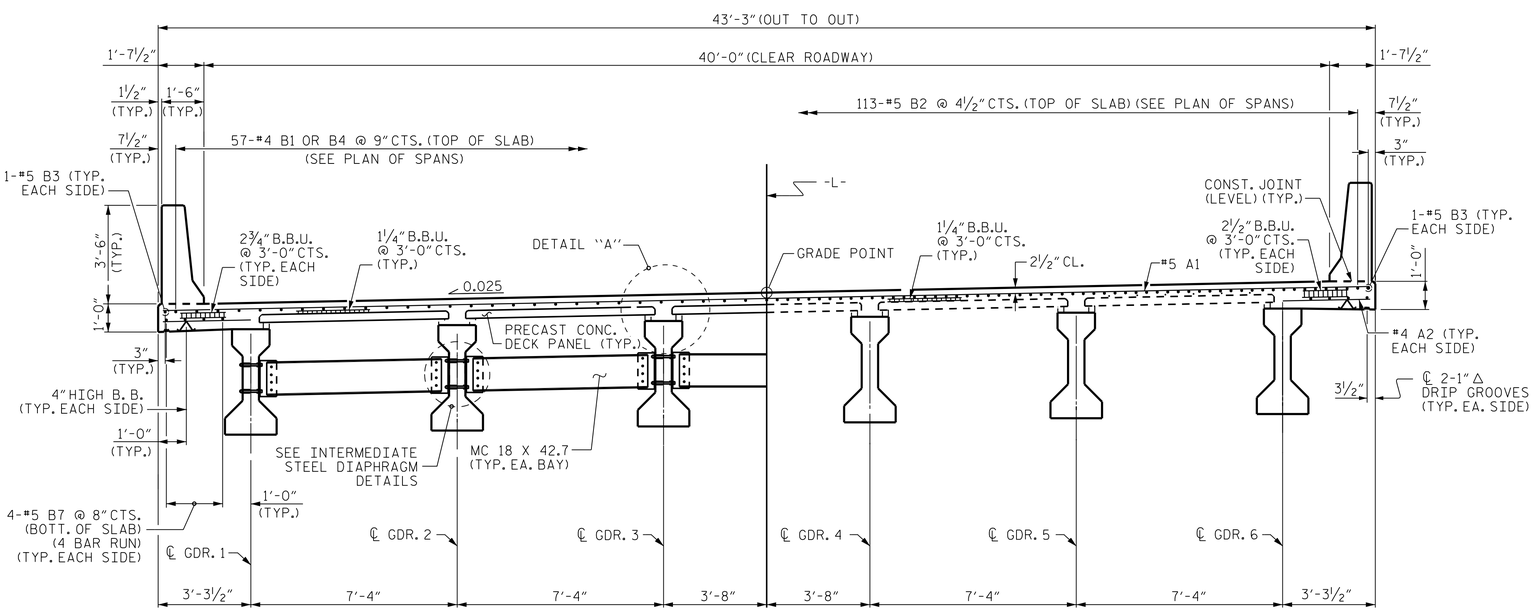

HALF TYPICAL SECTION

SHOWING INTERMEDIATE DIAPHRAGMS

HALF TYPICAL SECTION

SHOWING LINK SLAB AT BENT

NOTES

LONGITUDINAL STEEL MAY BE SHIFTED SLIGHTLY, AS NECESSARY, TO AVOID INTERFERENCE WITH STIRRUPS IN PRESTRESSED CONCRETE GIRDERS.

PREVIOUSLY CAST CONCRETE IN A CONTINUOUS UNIT SHALL HAVE ATTAINED A MINIMUM COMPRESSIVE STRENGTH OF 3,000 PSI BEFORE ADDITIONAL CONCRETE IS CAST IN THE UNIT.

BARRIER RAILS IN A CONTINUOUS UNIT SHALL NOT BE CAST UNTIL ALL SLAB CONCRETE IN THE UNIT HAS BEEN CAST AND HAS REACHED A MINIMUM COMPRESSIVE STRENGTH OF 3,000 PSI.

FOR INTERMEDIATE STEEL DIAPHRAGMS DETAILS, SEE "INTERMEDIATE STEEL DIAPHRAGMS FOR TYPE III PRESTRESSED CONCRETE GIRDERS" SHEET.

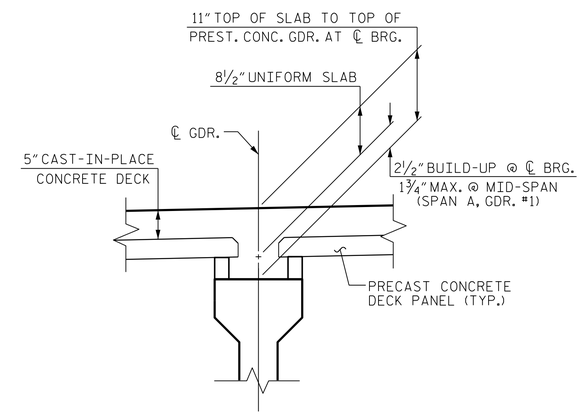

DETAIL "A"

PROJECT NO. 17BP.3.R.80

BRUNSWICK COUNTY

STATION: 20+18.00 -L-

SHEET 1 OF 2

DOCUMENT NOT CONSIDERED FINAL UNLESS ALL SIGNATURES COMPLETED

CDM Smith
CDM SMITH
5400 Glenwood Avenue, Suite 400
Raleigh, NC 27612-3228
NC COA No. F-1255

DRAWN BY : JJR DATE : 04/21
CHECKED BY : THF DATE : 06/21
DESIGN ENGINEER : VDK DATE : 07/21

DWG. No.

NORTH CAROLINA PROFESSIONAL SEAL 16301 ENGINEER TING-HSIUNG FANG

DocuSigned by: Ting H. Fang
1/5/2022

STATE OF NORTH CAROLINA
DEPARTMENT OF TRANSPORTATION
RALEIGH

SUPERSTRUCTURE

TYPICAL SECTION

REVISIONS						SHEET NO.
NO.	BY:	DATE:	NO.	BY:	DATE:	S-05
1			3			TOTAL SHEETS
2			4			26

FILE: STIKES
DATE: STATES
STIKES

DocuSign Envelope ID: 2BDD4FF0-40BD-4345-9C22-912B7DC6BCB1

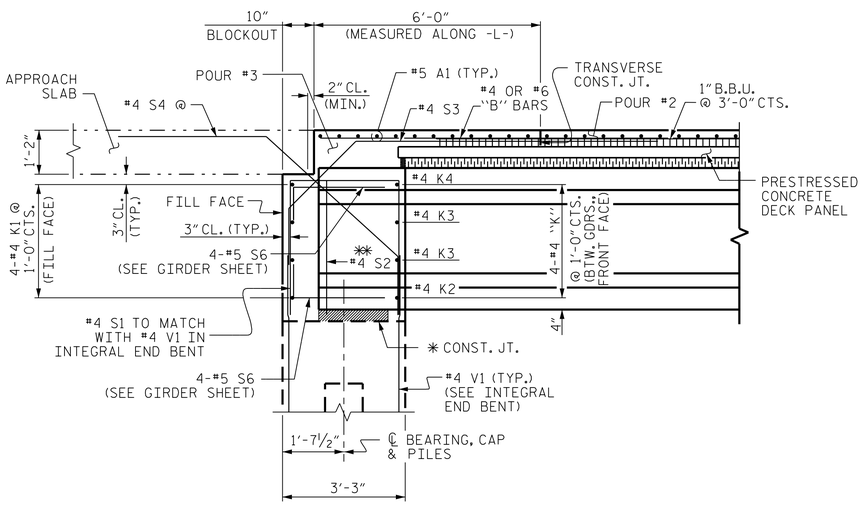

SECTION THROUGH INTEGRAL END BENT

* THE TOP SURFACE OF THE END BENT CAP EXCLUDING THE BEARING AREA SHALL BE RAKED TO A DEPTH OF ¼"

** #4 S2 LOCATED AT OUTSIDE EDGES OF INTEGRAL END BENT DIAPHRAGM. SEE PLAN OF SPANS AND TYPICAL SECTION FOR PLACEMENT DETAILS.

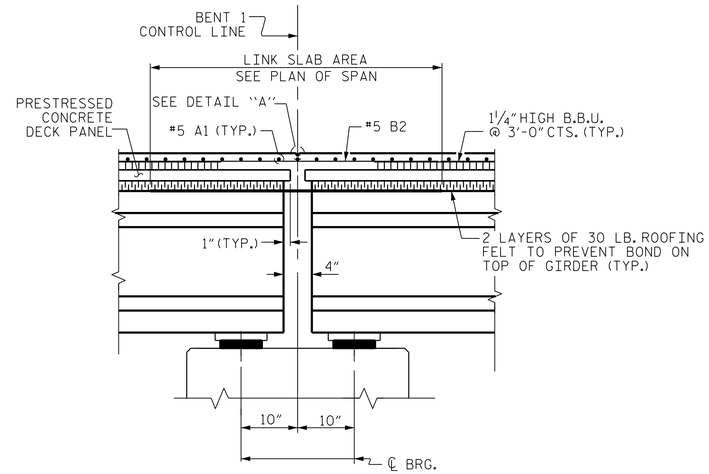

SECTION THROUGH LINK SLAB

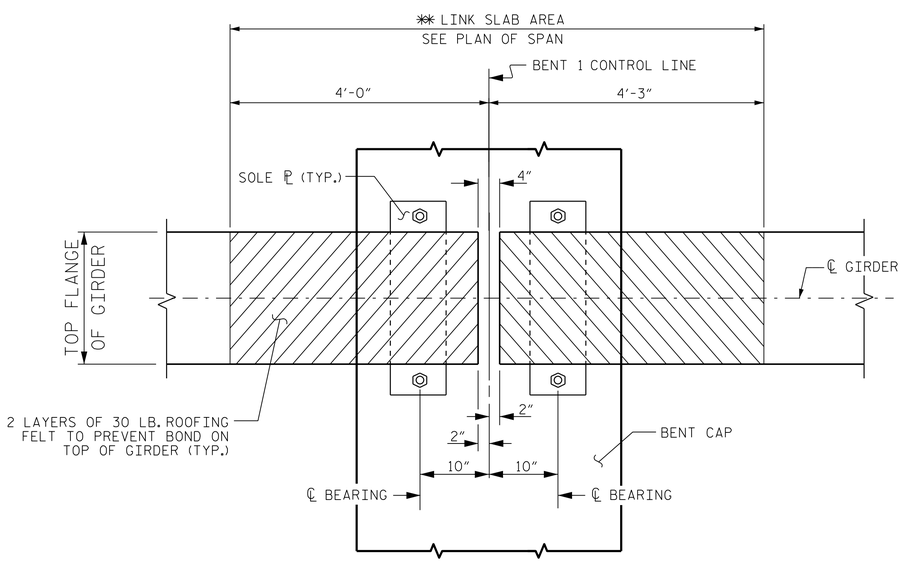

PLAN AT BENT

** THE TOP OF GIRDER IN THE AREA OF THE LINK SLAB SHALL BE SMOOTH AND FREE OF STIRRUPS OR ANCHOR STUDS.

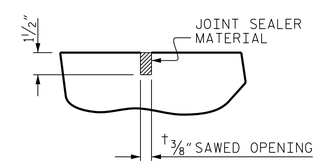

DETAIL "A"

A 1½" DEEP CONTRACTION JOINT AT EACH END BENT SHALL BE SAWED NO MORE THAN 12 HOURS AFTER THE APPROACH SLAB IS CAST. THE JOINT SHALL BE CLEANED OF ALL DEBRIS BEFORE THE SEALANT IS APPLIED. THE JOINT SEALER MATERIAL SHALL CONFORM TO THE REQUIREMENTS OF SECTION 1028 OF THE STANDARD SPECIFICATIONS.

PROJECT NO. 17BP.3.R.80
BRUNSWICK COUNTY
STATION: 20+18.00 -L-

SHEET 2 OF 2

STATE OF NORTH CAROLINA
DEPARTMENT OF TRANSPORTATION
RALEIGH

SUPERSTRUCTURE

TYPICAL SECTION

DOCUMENT NOT CONSIDERED FINAL UNLESS ALL SIGNATURES COMPLETED

CDM Smith
CDM SMITH
5400 Glenwood Avenue, Suite 400
Raleigh, NC 27612-3228
NC COA No. F-1255

DRAWN BY : JJR DATE : 04/21
CHECKED BY : THF DATE : 06/21
DESIGN ENGINEER : VDK DATE : 07/21

DWG. No.

NORTH CAROLINA PROFESSIONAL SEAL 16301 ENGINEER TING HSIUNG FANG
Signed by: Ting H. Fang
1/5/2022

REVISIONS						SHEET NO.
NO.	BY:	DATE:	NO.	BY:	DATE:	S-06
1			3			TOTAL SHEETS
2			4			26

FILE: $FILES
DATE: $DATE$ $TIME$

DocuSign Envelope ID: 2BDD4FF0-40BD-4345-9C22-912B7DC6BCB1

DECK PANEL SUPPORTS

THE CONTRACTOR SHALL PROVIDE THE DECK PANEL SUPPORT SYSTEM SHOWN OR HE MAY SUBMIT A DECK PANEL SUPPORT SYSTEM OF HIS OWN DESIGN TO THE ENGINEER FOR APPROVAL.

POLYSTYRENE SUPPORT SYSTEM

1. ALL POLYSTYRENE SHALL BE DOW STYROFOAM 60 HIGH-LOAD, UC INDUSTRIES FOAMULAR 600 OR APPROVED EQUAL.
2. THE POLYSTYRENE SUPPORT SYSTEM SHALL CONSIST OF ONE LAYER WITH A MINIMUM WIDTH OF 1½" AND A MAXIMUM WIDTH OF 2". THE POLYSTYRENE SHALL HAVE ½" X ½" WIDE SLOTS OR ½" DIAMETER HOLES AT 4'-0" CENTERS STAGGERED ALONG THE TOP AND BOTTOM.
3. THE POLYSTYRENE MAY BE CUT AND PLACED ON EDGE AS NECESSARY TO MATCH THE REQUIRED BUILDUP PROFILE ALONG THE GIRDER.
4. ADHESIVE, AS APPROVED BY THE ENGINEER, SHALL BE APPLIED TO THE TOP OF THE GIRDER IN A CONTINUOUS BEAD AND IN SUFFICIENT AMOUNT TO PREVENT THE POLYSTYRENE FROM BLOWING OUT AND TO PREVENT GAPS FROM FORMING BETWEEN THE POLYSTYRENE AND THE GIRDER. PRIOR TO PLACEMENT OF THE DECK PANELS, THE ADHESIVE SHALL ALSO BE APPLIED TO THE TOP OF THE POLYSTYRENE.
5. CONCRETE-FILLED BUCKETS, STACKS OF DECK PANELS, BUNDLED REINFORCING BARS OR OTHER HEAVY CONCENTRATED LOADS WILL NOT BE PERMITTED ON THE DECK PANEL ONCE THE PANEL HAS BEEN PLACED ON THE POLYSTYRENE SUPPORT SYSTEM.

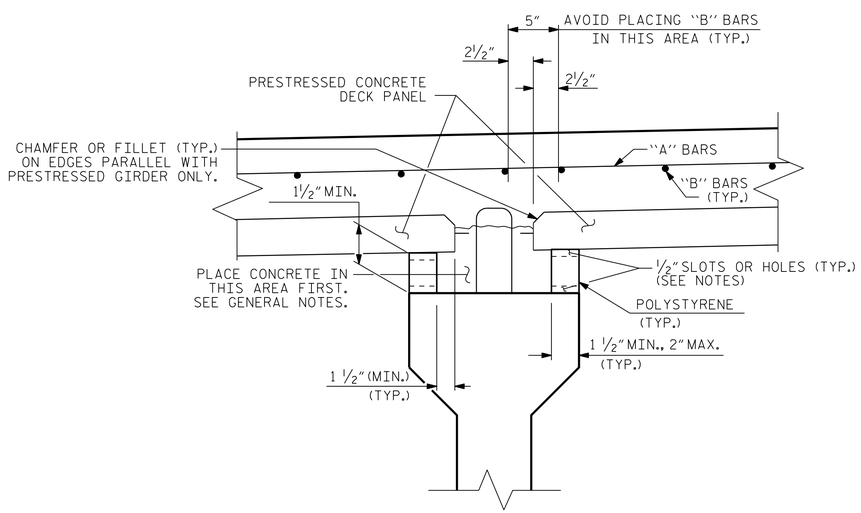

POLYSTYRENE SUPPORT

GENERAL NOTES

1. THE DESIGN COMPRESSIVE STRENGTH (f'c) FOR THE CONCRETE IN PRESTRESSED PANELS SHALL BE 5000 PSI MINIMUM AT 28 DAYS. COMPRESSIVE STRENGTH OF CONCRETE AT TIME OF RELEASE OF STRANDS SHALL BE 4000 PSI MINIMUM.
2. THE PRECAST PRESTRESSED PANEL SHALL HAVE A THICKNESS OF 3 ½" WITH THE PRESTRESSED STRANDS LOCATED AT HALF THE DEPTH OF THE PANEL.
3. FOR SKEWED SPANS, TRAPEZOIDAL CLOSURE PANELS SHALL HAVE A MINIMUM WIDTH OF 2 FEET ON THE SHORT SIDE.
4. ALL PRESTRESSING STRANDS SHALL EXTEND 2" BEYOND THE PANEL EDGES.
5. SHEAR REINFORCING OF 0.60 SQ. INCHES OF REINFORCING STEEL PER 10 SQ. FEET OF PANEL SURFACE SHALL BE PROVIDED IN THE PANEL TO ENSURE COMPOSITE ACTION BETWEEN PANEL AND THE CAST-IN-PLACE CONCRETE. SHEAR REINFORCEMENT SHALL BE MADE OF WELDED WIRE HAVING A MINIMUM YIELD STRENGTH OF 60 KSI.
6. SHEAR REINFORCEMENT AND LIFTING DEVICES SHALL BE CONSTRUCTED AND PLACED SO AS TO AVOID ANY INTERFERENCE WITH REINFORCING STEEL IN THE CAST-IN-PLACE DECK SLAB AND TO ALLOW FOR PROPER CONCRETE CONSOLIDATION IN THE DECK PANEL.
7. SHIFT LONGITUDINAL "B" BARS AS NECESSARY TO OBTAIN A MINIMUM CLEAR DISTANCE OF 2 ½" TO THE RIGHT OR LEFT OF THE EDGE OF THE DECK PANEL. IF, IN SHIFTING TO OBTAIN THIS CLEARANCE, THE "B" BAR INTERFERES WITH THE STIRRUP IN THE TOP OF THE GIRDER THE "B" BAR MAY BE ELIMINATED.
8. WHEN CASTING THE DECK, PLACE CONCRETE FIRST OVER THE GIRDERS IN CONTINUOUS STRIPS A MINIMUM OF THREE PANEL LENGTHS AHEAD OF THE REST OF THE CONCRETE. CAREFULLY VIBRATE THE CONCRETE OVER THE GIRDERS SO THAT CONCRETE COMPLETELY FILLS THE AREA UNDER THE DECK PANEL OVERHANGS. THEN PLACE AND VIBRATE THE REMAINING DECK CONCRETE.
9. PRECAST PANELS SHALL BE DESIGNED FOR AN ALLOWABLE TENSILE STRESS OF 0 PSI IN THE PRECOMPRESSED TENSILE ZONE UNDER ALL LOADING CONDITIONS.
10. PRECAST DECK PANELS SHALL CONTAIN CALCIUM NITRITE CORROSION INHIBITOR IN ACCORDANCE WITH THE STANDARD SPECIFICATIONS.
11. ALL BAR SUPPORTS AND INCIDENTAL REINFORCING STEEL USED IN THE PRECAST DECK PANELS SHALL BE EPOXY COATED IN ACCORDANCE WITH THE STANDARD SPECIFICATIONS.

PROJECT NO. 17BP.3.R.80
BRUNSWICK COUNTY
STATION: 20+18.00 -L-

STATE OF NORTH CAROLINA
DEPARTMENT OF TRANSPORTATION
RALEIGH
STANDARD

PRECAST PRESTRESSED CONCRETE DECK PANELS

DOCUMENT NOT CONSIDERED FINAL UNLESS ALL SIGNATURES COMPLETED

CDM Smith
CDM SMITH
5400 Glenwood Avenue, Suite 400
Raleigh, NC 27612-3228
NC COA No. F-1255

DRAWN BY : JJR DATE : 04/21
CHECKED BY : THF DATE : 06/21
DESIGN ENGINEER : VDK DATE : 07/21

DWG. No.

NORTH CAROLINA PROFESSIONAL SEAL 16301 ENGINEER TING-HSIUNG FANG
DocuSigned by: Ting H. Fang
1/5/2022
DocuSign Envelope ID: 2BDD4FF0-40BD-4345-9C22-912B7DC6BCB1

REVISIONS						SHEET NO.
NO.	BY:	DATE:	NO.	BY:	DATE:	S-07
1			3			TOTAL SHEETS
2			4			26

FILE: SFILES
DATE: SDATES STIMES

STD. NO. PDP1

DocuSign Envelope ID: 2BDD4FF0-40BD-4345-9C22-912B7DC6BCB1

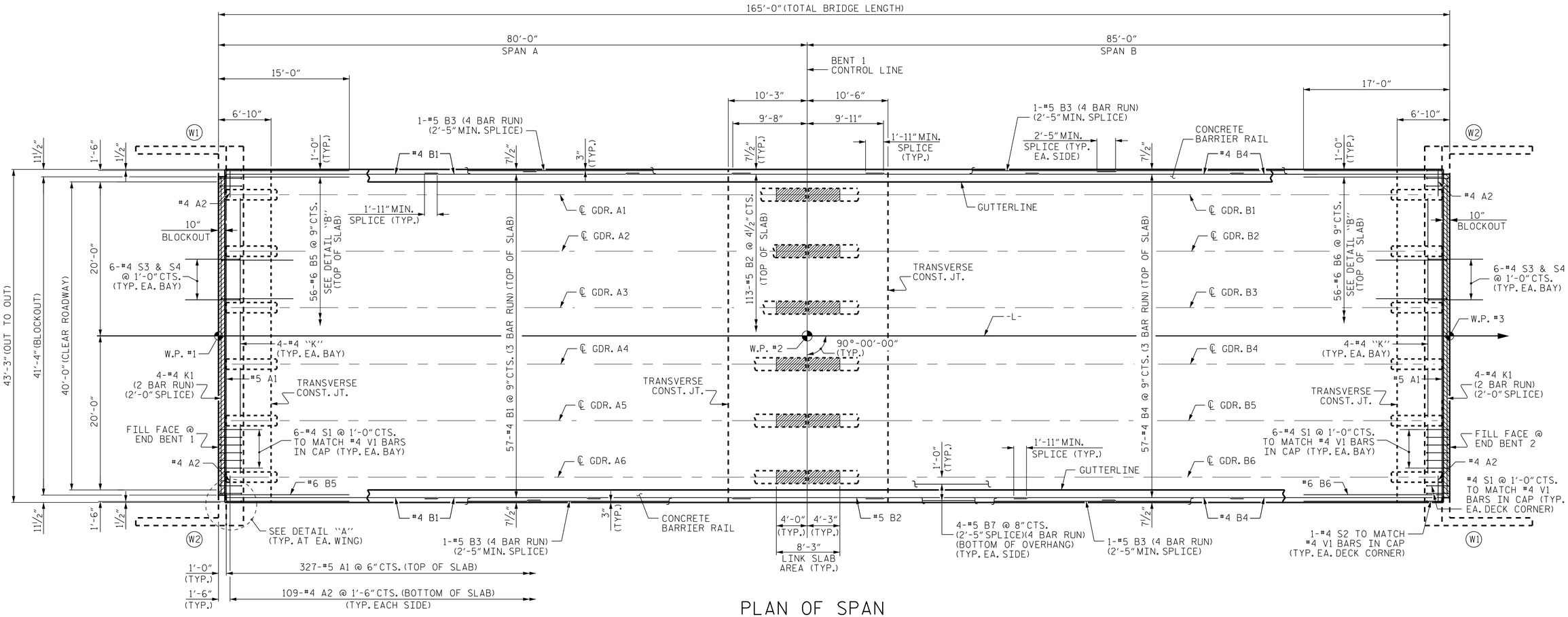

PLAN OF SPAN

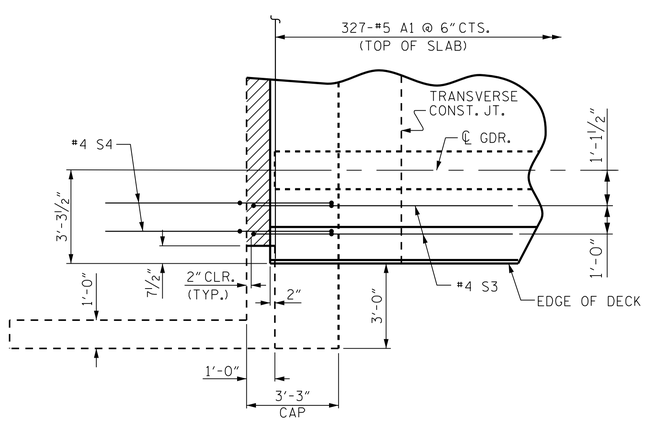

DETAIL "A"

S1, S2 & A2 BARS ARE NOT SHOWN FOR CLARITY.

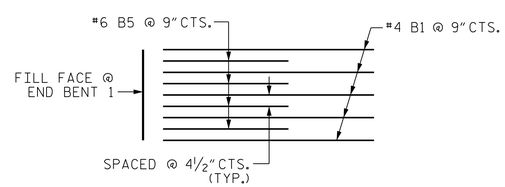

DETAIL "B"

SHOWING PLACEMENT OF ADDITIONAL #6 BARS AT THE TOP OF SLAB IN INTEGRAL END BENTS FOR PRECAST CONCRETE DECK PANELS USED

END BENT 1 SHOWN, END BENT 2 SIMILAR

PROJECT NO. 17BP.3.R.80
BRUNSWICK COUNTY
STATION: 20+18.00 -L-

DOCUMENT NOT CONSIDERED FINAL UNLESS ALL SIGNATURES COMPLETED

CDM Smith
CDM SMITH
5400 Glenwood Avenue, Suite 400
Raleigh, NC 27612-3228
NC COA No. F-1255

DRAWN BY : JJR DATE : 04/21
CHECKED BY : THF DATE : 06/21
DESIGN ENGINEER : VDK DATE : 07/21

DWG. No.

NORTH CAROLINA PROFESSIONAL SEAL 16301 ENGINEER TING HSIUNG FANG
DocuSigned by: Ting H. Fang
1/5/2022

STATE OF NORTH CAROLINA
DEPARTMENT OF TRANSPORTATION
RALEIGH

SUPERSTRUCTURE

PLAN OF SPANS A & B

REVISIONS						SHEET NO.
NO.	BY:	DATE:	NO.	BY:	DATE:	S-08
1			3			TOTAL SHEETS
2			4			26

FILE: STYLES STYMES
DATE: SDATES

DocuSign Envelope ID: 2BDD4FF0-40BD-4345-9C22-912B7DC6BCB1

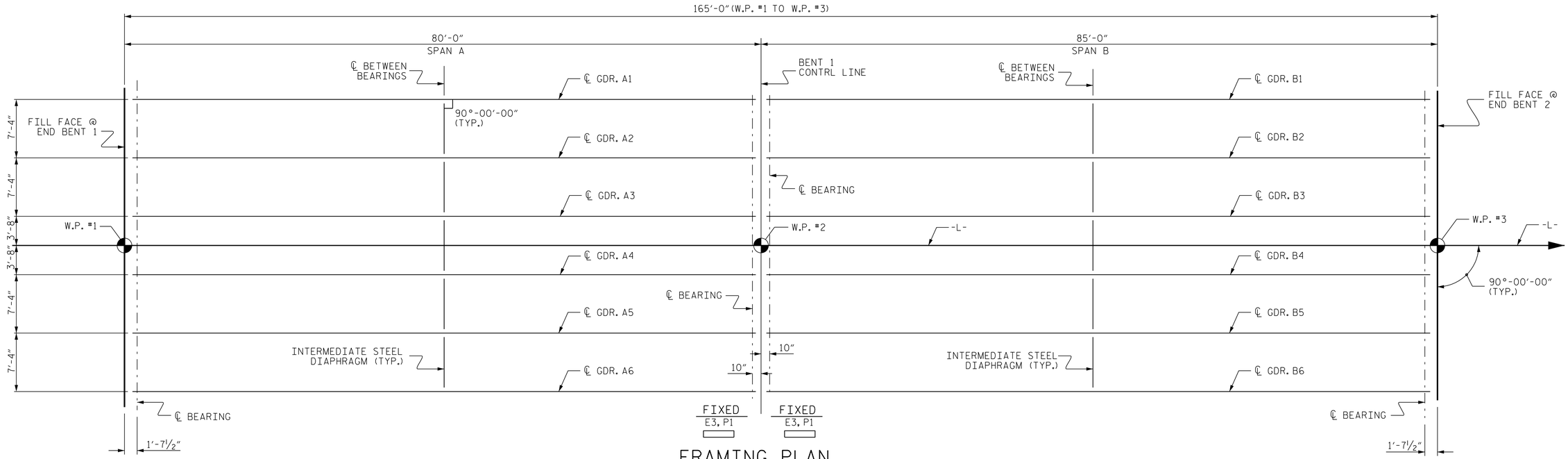

FRAMING PLAN

FOR INTERMEDIATE STEEL DIAPHRAGM DETAILS. SEE "INTERMEDIATE STEEL DIAPHRAGMS FOR TYPE III PRESTRESSED CONCRETE GIRDERS" SHEET.

DEAD LOAD DEFLECTION TABLE

SPAN A

GIRDERS 1 & 6

	BRG.	0.05	0.10	0.15	0.20	0.25	0.30	0.35	0.40	0.45	0.50	0.55	0.60	0.65	0.70	0.75	0.80	0.85	0.90	0.95	BRG.
CAMBER (GIRDER ALONE IN PLACE) ↑	0	0.030	0.059	0.086	0.111	0.134	0.152	0.167	0.178	0.185	0.187	0.185	0.178	0.167	0.152	0.134	0.111	0.086	0.059	0.030	0
✳ DEFLECTION DUE TO SUPERIMPOSED D.L. ↓	0	0.016	0.031	0.047	0.062	0.075	0.086	0.095	0.101	0.105	0.106	0.105	0.101	0.095	0.086	0.075	0.062	0.047	0.031	0.016	0
FINAL CAMBER ↑	0	3/16"	5/16"	7/16"	9/16"	11/16"	13/16"	7/8"	15/16"	15/16"	1"	15/16"	15/16"	7/8"	13/16"	11/16"	9/16"	7/16"	5/16"	3/16"	0

GIRDERS 2 THRU 5

	BRG.	0.05	0.10	0.15	0.20	0.25	0.30	0.35	0.40	0.45	0.50	0.55	0.60	0.65	0.70	0.75	0.80	0.85	0.90	0.95	BRG.
CAMBER (GIRDER ALONE IN PLACE) ↑	0	0.030	0.059	0.086	0.111	0.134	0.152	0.167	0.178	0.185	0.187	0.185	0.178	0.167	0.152	0.134	0.111	0.086	0.059	0.030	0
✳ DEFLECTION DUE TO SUPERIMPOSED D.L. ↓	0	0.017	0.035	0.052	0.068	0.082	0.095	0.105	0.112	0.117	0.118	0.117	0.112	0.105	0.095	0.082	0.068	0.052	0.035	0.017	0
FINAL CAMBER ↑	0	1/8"	5/16"	7/16"	1/2"	5/8"	11/16"	3/4"	13/16"	13/16"	13/16"	13/16"	13/16"	3/4"	11/16"	5/8"	1/2"	7/16"	5/16"	1/8"	0

SPAN B

GIRDERS 1 & 6

	BRG.	0.05	0.10	0.15	0.20	0.25	0.30	0.35	0.40	0.45	0.50	0.55	0.60	0.65	0.70	0.75	0.80	0.85	0.90	0.95	BRG.
CAMBER (GIRDER ALONE IN PLACE) ↑	0	0.032	0.063	0.092	0.119	0.142	0.162	0.178	0.190	0.197	0.200	0.197	0.190	0.178	0.162	0.142	0.119	0.092	0.063	0.032	0
✳ DEFLECTION DUE TO SUPERIMPOSED D.L. ↓	0	0.021	0.041	0.061	0.081	0.097	0.112	0.123	0.132	0.137	0.139	0.137	0.132	0.123	0.112	0.097	0.081	0.061	0.041	0.021	0
FINAL CAMBER ↑	0	1/8"	1/4"	3/8"	7/16"	9/16"	5/8"	11/16"	11/16"	3/4"	3/4"	3/4"	11/16"	11/16"	5/8"	9/16"	7/16"	3/8"	1/4"	1/8"	0

GIRDERS 2 THRU 5

	BRG.	0.05	0.10	0.15	0.20	0.25	0.30	0.35	0.40	0.45	0.50	0.55	0.60	0.65	0.70	0.75	0.80	0.85	0.90	0.95	BRG.
CAMBER (GIRDER ALONE IN PLACE) ↑	0	0.032	0.063	0.092	0.119	0.142	0.162	0.178	0.190	0.197	0.200	0.197	0.190	0.178	0.162	0.142	0.119	0.092	0.063	0.032	0
✳ DEFLECTION DUE TO SUPERIMPOSED D.L. ↓	0	0.023	0.045	0.067	0.088	0.107	0.123	0.135	0.145	0.151	0.152	0.151	0.145	0.135	0.123	0.107	0.088	0.067	0.045	0.023	0
FINAL CAMBER ↑	0	1/8"	3/16"	5/16"	3/8"	7/16"	7/16"	1/2"	9/16"	9/16"	9/16"	9/16"	9/16"	1/2"	7/16"	7/16"	3/8"	5/16"	3/16"	1/8"	0

✳ INCLUDES FUTURE WEARING SURFACE
ALL VALUES ARE SHOWN IN FEET (DECIMAL FORM) EXCEPT "FINAL CAMBER," WHICH IS GIVEN IN INCHES (FRACTION FORM).

PROJECT NO. 17BP.3.R.80
BRUNSWICK COUNTY
STATION: 20+18.00 -L-

DOCUMENT NOT CONSIDERED FINAL UNLESS ALL SIGNATURES COMPLETED

CDM Smith
CDM SMITH
5400 Glenwood Avenue, Suite 400
Raleigh, NC 27612-3228
NC COA No. F-1255

DRAWN BY : JJR DATE : 04/21
CHECKED BY : THF DATE : 06/21
DESIGN ENGINEER : VDK DATE : 07/21

DWG. No.

NORTH CAROLINA PROFESSIONAL SEAL 16301 ENGINEER TING-HSIUNG FANG
Signed by: Ting H. Fang
1/5/2022

STATE OF NORTH CAROLINA
DEPARTMENT OF TRANSPORTATION
RALEIGH

SUPERSTRUCTURE

FRAMING PLAN AND DEAD LOAD DEFLECTIONS

REVISIONS						SHEET NO.
NO.	BY:	DATE:	NO.	BY:	DATE:	S-09
1			3			TOTAL SHEETS
2			4			26

FILE: SFILES STMES
DATE: $DATES

DocuSign Envelope ID: 7278C01B-E16F-4B12-A4AE-83E8AA3FABD2

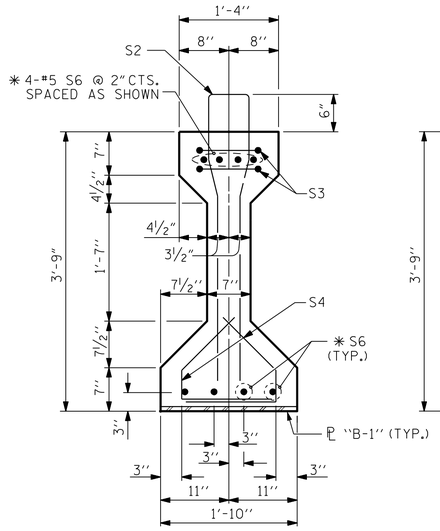

SECTION A-A

(FOR EMBEDDED ℄ "B-1" DETAILS SEE SHEET 2 OF 2)

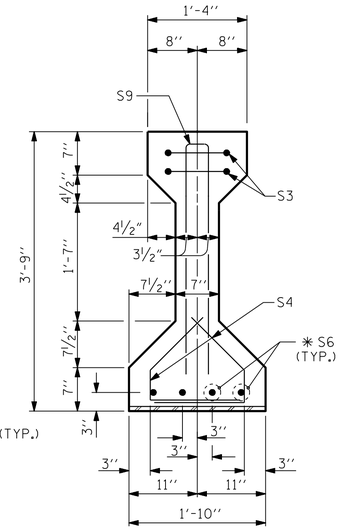

SECTION B-B

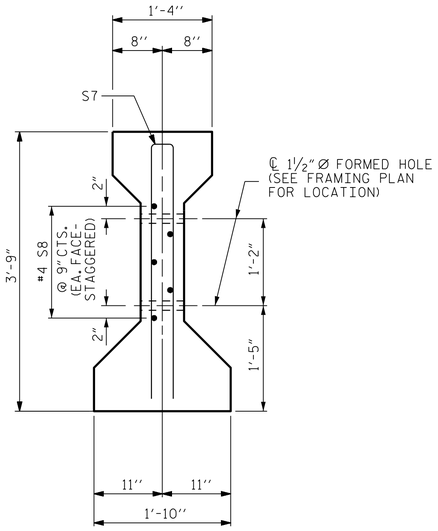

SECTION C-C

(S1 BARS NOT SHOWN)

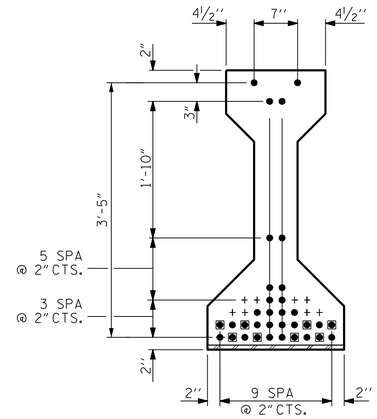

AT END OF GIRDER

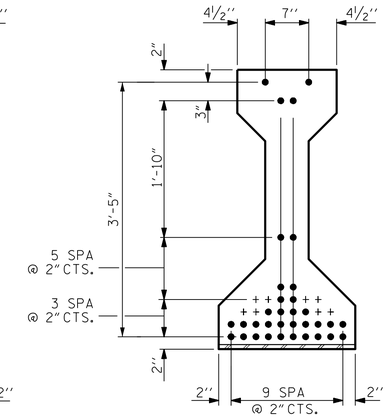

AT ℄ OF GIRDER

0.6" Ø LOW RELAXATION STRAND LAYOUT

(34 STRANDS, ALL STRAIGHT, 8 DEBONDED STRANDS)

DEBONDING LEGEND

- ● FULLY BONDED STRANDS
- ⊡ STRANDS DEBONDED FOR 12'-0" FROM END OF GIRDER

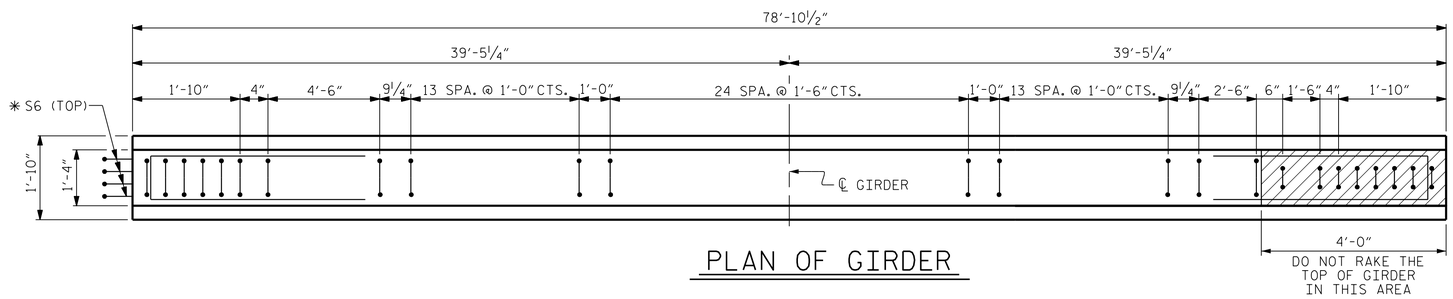

PLAN OF GIRDER

NO BEVEL REQUIRED AT END OF GIRDERS, ALL DIMENSIONS SHOWN ARE HORIZONTAL DISTANCE.

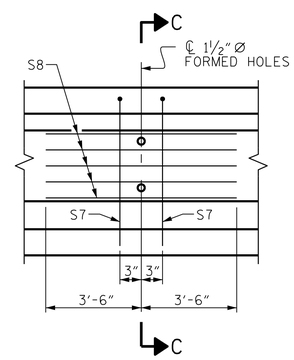

PARTIAL ELEVATION

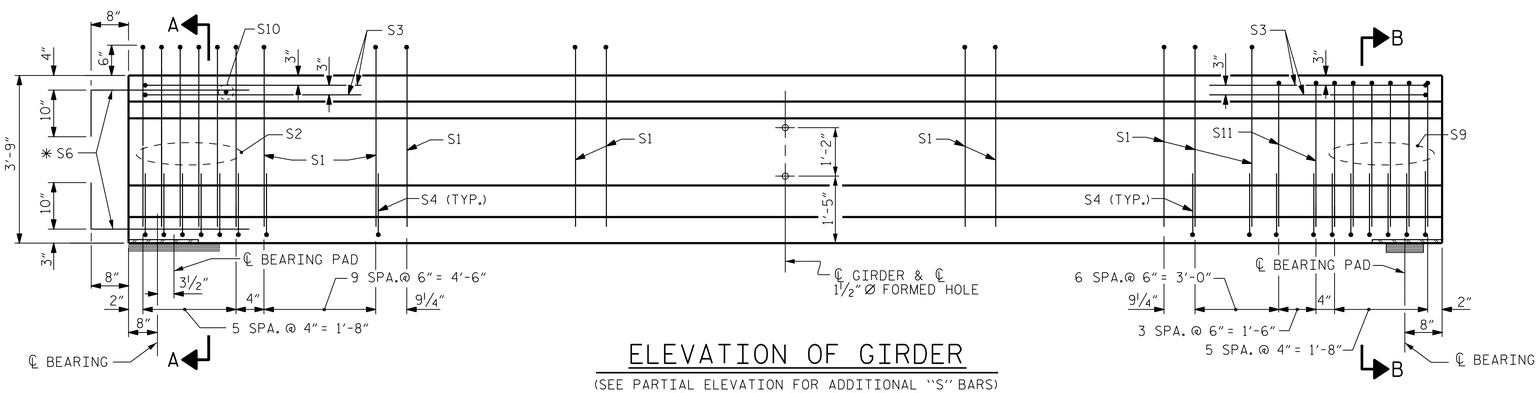

ELEVATION OF GIRDER

(SEE PARTIAL ELEVATION FOR ADDITIONAL "S" BARS) SPAN A SHOWN, SPAN B SIMILIAR

AT END BENT 1
INTEGRAL

AT BENT 1
LINK SLAB

0.6" Ø L. R. GRADE 270 STRANDS

AREA (SQUARE INCHES)	ULTIMATE STRENGTH (LBS. PER STRAND)	APPLIED PRESTRESS (LBS. PER STRAND)
0.217	58,600	43,950

REINFORCING STEEL FOR ONE GIRDER

BAR	NUMBER	SIZE	TYPE	LENGTH	WEIGHT
S1	69	#4	1	8'-6"	392
S2	6	#6	1	8'-6"	77
S3	4	#4	3	8'-8"	23
S4	64	#4	2	2'-9"	118
✱ S6	12	#5	STR	3'-8"	46
S7	2	#5	3	7'-2"	15
S8	5	#4	STR	7'-0"	23
S9	6	#6	3	7'-2"	65
S10	1	#3	STR	1'-0"	1
S11	4	#4	3	7'-2"	19

✱ S6 BARS SHALL BE BENT BEFORE SHIPMENT. HEAT BENDING SHALL NOT BE ALLOWED.

BAR TYPES

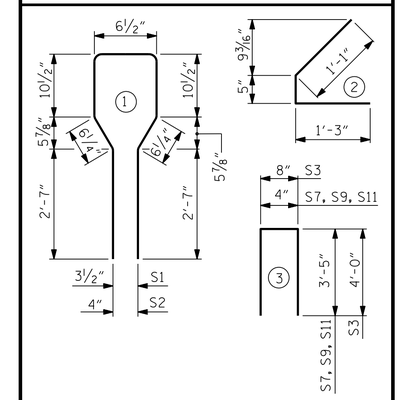

ALL BAR DIMENSIONS ARE OUT-TO-OUT

QUANTITIES FOR ONE GIRDER

	REINFORCING STEEL	9000 PSI CONCRETE	0.6" Ø L. R. STRANDS
	LB.	C.Y.	No.
	777	11.4	34

GIRDERS REQUIRED

NUMBER	LENGTH	TOTAL LENGTH
6	78'-10½"	473.25'

FOR PRESTRESSED GIRDER NOTES, SEE SHEET 3 OF 3.

PROJECT NO. 17BP.3.R.80
BRUNSWICK COUNTY
STATION: 20+18.00 -L-

SHEET 1 OF 3

STATE OF NORTH CAROLINA
DEPARTMENT OF TRANSPORTATION
RALEIGH

STANDARD

AASHTO TYPE III PRESTRESSED CONCRETE GIRDER CONTINUOUS FOR LIVE LOAD

FOR SPAN A

DOCUMENT NOT CONSIDERED FINAL UNLESS ALL SIGNATURES COMPLETED

CDM Smith
CDM SMITH
5400 Glenwood Avenue, Suite 400
Raleigh, NC 27612-3228
NC COA No. F-1255

DRAWN BY : JJR DATE : 04/21
CHECKED BY : THF DATE : 06/21
DESIGN ENGINEER : VDK DATE : 07/21

DWG. No.

NORTH CAROLINA PROFESSIONAL SEAL 16301 ENGINEER TING-SUNG HANG
DocuSigned by: Ting H. Fang
68E7E9C4F9AA469...
1/5/2022

REVISIONS							SHEET NO.
NO.	BY:	DATE:	NO.	BY:	DATE:		S-10
1			3				TOTAL SHEETS
2			4				26

STD. NO. PCG5

FILE: $FILES
DATE: $DATES
$TIMES

DocuSign Envelope ID: 2BDD4FF0-40BD-4345-9C22-912B7DC6BCB1

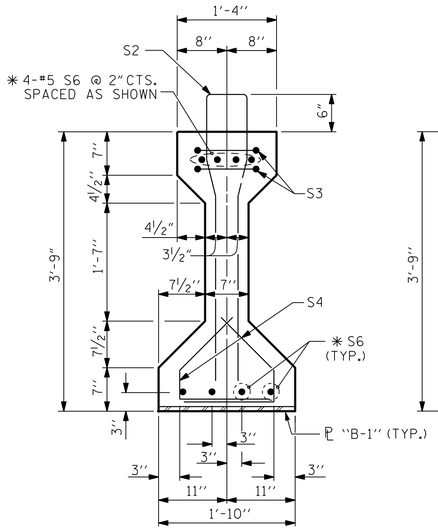

SECTION A-A

(FOR EMBEDDED ℄ "B-1" DETAILS SEE SHEET 2 OF 2)

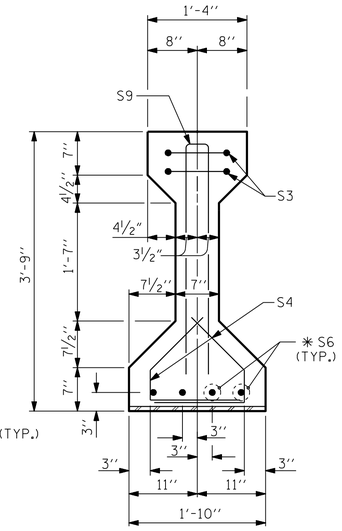

SECTION B-B

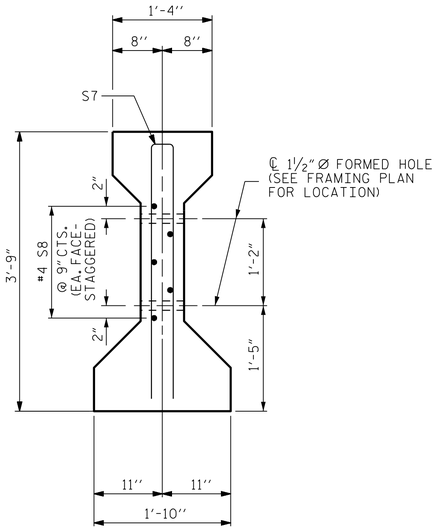

SECTION C-C

(S1 BARS NOT SHOWN)

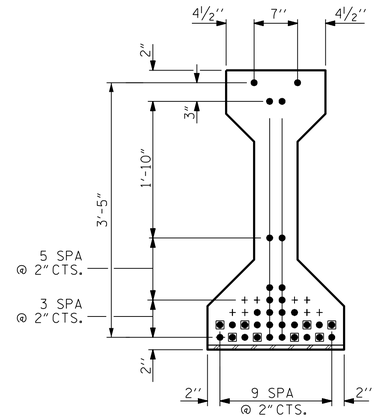

AT END OF GIRDER

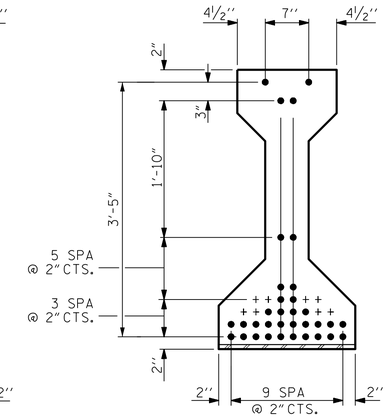

AT ℄ OF GIRDER

0.6" Ø LOW RELAXATION STRAND LAYOUT

(34 STRANDS, ALL STRAIGHT, 8 DEBONDED STRANDS)

DEBONDING LEGEND

- ● FULLY BONDED STRANDS
- ▣ STRANDS DEBONDED FOR 12'-0" FROM END OF GIRDER

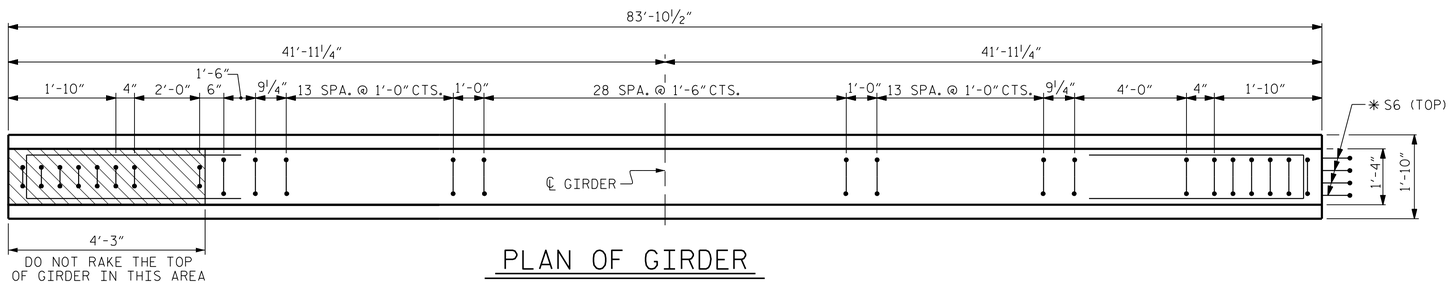

PLAN OF GIRDER

NO BEVEL REQUIRED AT END OF GIRDERS. ALL DIMENSIONS SHOWN ARE HORIZONTAL DISTANCE.

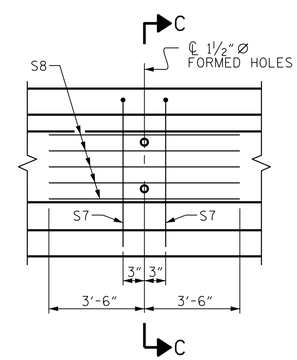

PARTIAL ELEVATION

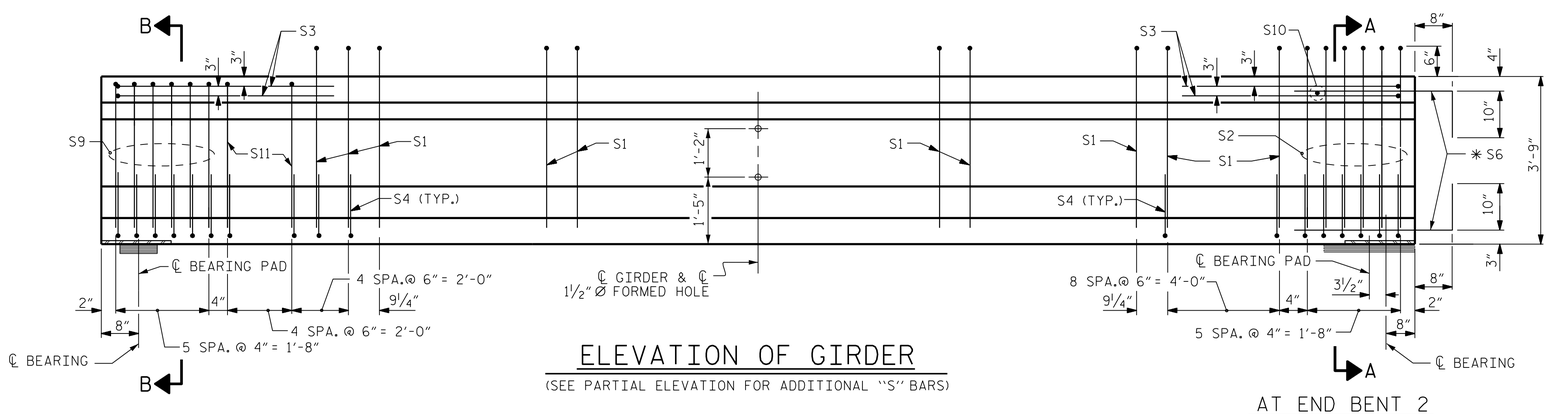

AT BENT 1

LINK SLAB

ELEVATION OF GIRDER

(SEE PARTIAL ELEVATION FOR ADDITIONAL "S" BARS)

AT END BENT 2

INTEGRAL

0.6" Ø L. R. GRADE 270 STRANDS

AREA (SQUARE INCHES)	ULTIMATE STRENGTH (LBS. PER STRAND)	APPLIED PRESTRESS (LBS. PER STRAND)
0.217	58,600	43,950

REINFORCING STEEL FOR ONE GIRDER

BAR	NUMBER	SIZE	TYPE	LENGTH	WEIGHT
S1	70	#4	1	8'-6"	397
S2	6	#6	1	8'-6"	77
S3	4	#4	3	8'-8"	23
S4	60	#4	2	2'-9"	110
✱ S6	12	#5	STR	3'-8"	46
S7	2	#5	3	7'-2"	15
S8	5	#4	STR	7'-0"	23
S9	6	#6	3	7'-2"	65
S10	1	#3	STR	1'-0"	1
S11	5	#4	3	7'-2"	24

✱ S6 BARS SHALL BE BENT BEFORE SHIPMENT. HEAT BENDING SHALL NOT BE ALLOWED.

BAR TYPES

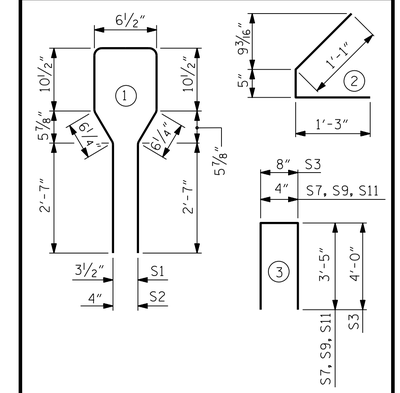

ALL BAR DIMENSIONS ARE OUT-TO-OUT

QUANTITIES FOR ONE GIRDER

	REINFORCING STEEL	9000 PSI CONCRETE	0.6" Ø L. R. STRANDS
	LB.	C.Y.	No.
	781	12.1	34

GIRDERS REQUIRED

NUMBER	LENGTH	TOTAL LENGTH
6	83'-10½"	503.25'

FOR PRESTRESSED GIRDER NOTES, SEE SHEET 3 OF 3.

PROJECT NO. 17BP.3.R.80

BRUNSWICK COUNTY

STATION: 20+18.00 -L-

SHEET 2 OF 3

STATE OF NORTH CAROLINA
DEPARTMENT OF TRANSPORTATION
RALEIGH

STANDARD

AASHTO TYPE III PRESTRESSED CONCRETE GIRDER CONTINUOUS FOR LIVE LOAD

FOR SPAN B

DOCUMENT NOT CONSIDERED FINAL UNLESS ALL SIGNATURES COMPLETED

CDM Smith
CDM SMITH
5400 Glenwood Avenue, Suite 400
Raleigh, NC 27612-3228
NC COA No. F-1255

DRAWN BY : JJR DATE : 04/21
CHECKED BY : THF DATE : 06/21
DESIGN ENGINEER : VDK DATE : 07/21

DWG. No.

NORTH CAROLINA PROFESSIONAL SEAL 16301 ENGINEER TING-HSIUNG FANG
Ting H. Fang
1/3/2022

REVISIONS						
NO.	BY:	DATE:	NO.	BY:	DATE:	
1			3			
2			4			

SHEET NO. S-11

TOTAL SHEETS 26

STD. NO. PCG5

FILE: SFILES
DATE: $DATES
$TIMES

DocuSign Envelope ID: 2BDD4FF0-40BD-4345-9C22-912B7DC6BCB1

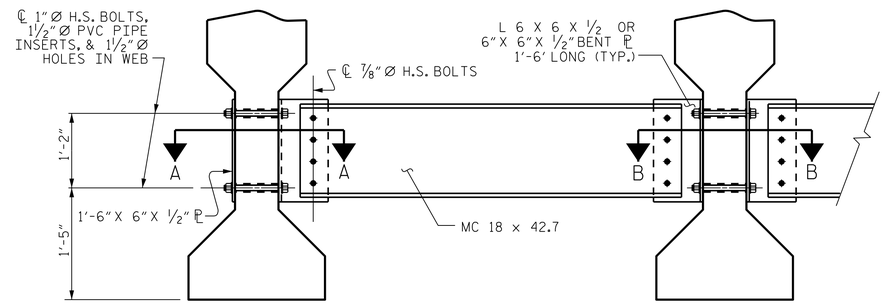

EXTERIOR GIRDER

INTERIOR GIRDER

PART SECTION AT INTERMEDIATE DIAPHRAGM

(TYPICAL FOR EACH BAY)

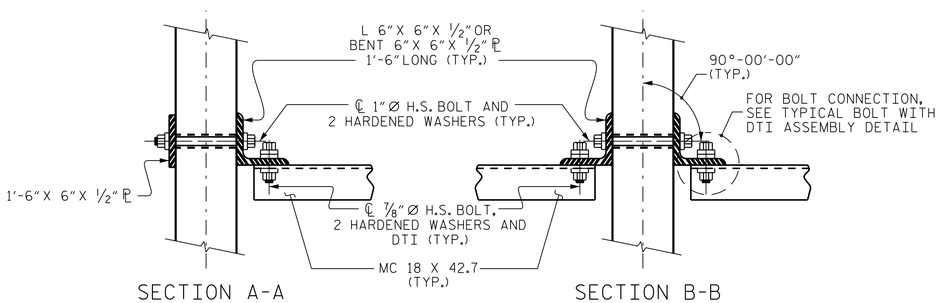

SECTION A-A

SECTION B-B

CONNECTION DETAILS

FOR LOCATION OF INTERMEDIATE DIAPHRAGMS, SEE "FRAMING PLAN" SHEET.

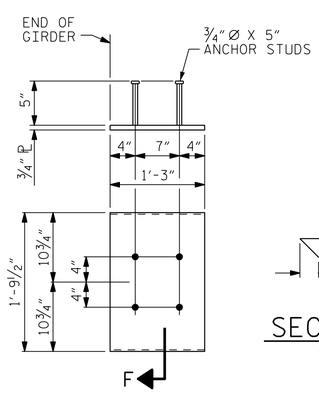

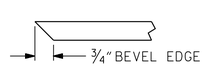

SECTION "F"

(SEE NOTES)

EMBEDDED PLATE "B-1" DETAILS

(2 REQ'D PER GIRDER)

PRESTRESSED CONCRETE GIRDER NOTES

ALL PRESTRESSING STRANDS SHALL BE 7-WIRE LOW-RELAXATION GRADE 270 STRANDS AND SHALL CONFORM TO AASHTO M203 EXCEPT FOR SAMPLING REQUIREMENTS WHICH SHALL BE IN ACCORDANCE WITH THE STANDARD SPECIFICATIONS.

ALL REINFORCING STEEL SHALL BE GRADE 60.

EMBEDDED PLATE "B-1" SHALL BE GALVANIZED IN ACCORDANCE WITH THE STANDARD SPECIFICATIONS.

ANCHOR STUDS SHALL CONFORM TO AASHTO M169 GRADES 1010 THROUGH 1020 OR APPROVED EQUAL, AND SHALL MEET THE TYPE "B" REQUIREMENTS OF SUBSECTION 7.3 OF THE ANSI/AASHTO/AWS D1.5 BRIDGE WELDING CODE.

AT ENDS OF GIRDERS TO BE EMBEDDED IN CONCRETE DIAPHRAGMS OR END WALLS, PRESTRESSING STRANDS MAY EXTEND A MAXIMUM OF 2" BEYOND THE GIRDER ENDS. OTHERWISE, PRESTRESSING STRANDS SHALL BE CUT FLUSH WITH THE GIRDER ENDS.

THE TRANSFER OF LOAD FROM THE ANCHORAGES TO THE GIRDER SHALL BE DONE WHEN CONCRETE HAS REACHED A COMPRESSIVE STRENGTH OF NOT LESS THAN 6900 PSI.

THE TOP SURFACE OF THE GIRDER SHALL BE RAKED TO A DEPTH OF ¼"

PRESTRESSED CONCRETE GIRDERS ARE DESIGNED FOR 0 PSI TENSION IN THE PRECOMPRESSED TENSILE ZONE UNDER ALL LOADING CONDITIONS.

PRESTRESSED CONCRETE GIRDERS SHALL CONTAIN CALCIUM NITRITE CORROSION INHIBITOR IN ACCORDANCE WITH THE STANDARD SPECIFICATIONS.

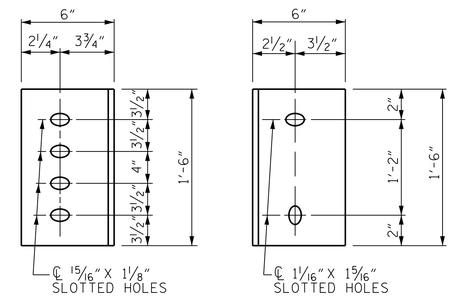

DIAPHRAGM FACE

WEB FACE

CONNECTOR PLATE DETAILS

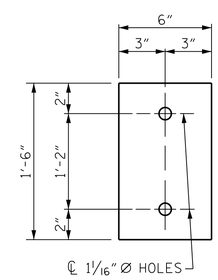

PLATE DETAILS

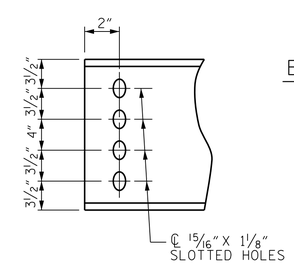

CHANNEL END

STRUCTURAL STEEL NOTES

ALL INTERMEDIATE DIAPHRAGM STEEL AND CONNECTOR PLATES SHALL BE AASHTO M270 GRADE 50 OR APPROVED EQUAL.

TENSION ON THE ASTM A325 BOLTS THROUGH THE CHANNEL MEMBER SHALL BE CALIBRATED USING DIRECT TENSION INDICATOR WASHERS IN ACCORDANCE WITH THE STANDARD SPECIFICATIONS.

TENSION ON THE ASTM A449 BOLTS THROUGH THE GIRDER WEB SHALL BE SNUG TIGHTENED FOLLOWED BY AN ADDITIONAL ¼ TURN.

THE PLATES, BENT PLATES, CHANNELS, AND ANGLES SHALL BE GALVANIZED OR METALLIZED IN ACCORDANCE WITH THE STANDARD SPECIFICATIONS. FOR THERMAL SPRAYED COATINGS (METALLIZATION), SEE SPECIAL PROVISIONS.

FOR METALLIZATION, APPLY AN 8 MIL THICK 99.50 PERCENT 1350 ALUMINUM (W-AL-1350) THERMAL SPRAY COATING WITH A 0.5 MIL THICK SEAL COAT TO ALL PLATES, BENT PLATES, CHANNELS, ANGLES, AND PLATE WASHERS IN ACCORDANCE WITH THE THERMAL SPRAYED COATINGS SPECIAL PROVISION AND SECTION 442 OF THE STANDARD SPECIFICATIONS.

APPLY 1 COAT EACH OF 1080-12 BROWN AND 1080-12 GRAY PAINT ON THE EDGES AND THE WEB FACE OF THE CONNECTOR PLATE WHICH COMES IN CONTACT WITH THE CONCRETE GIRDER IN ACCORDANCE WITH SECTION 442 OF THE STANDARD SPECIFICATIONS.

GALVANIZE THE HIGH STRENGTH BOLTS, NUTS, WASHERS AND DIRECT TENSION INDICATORS IN ACCORDANCE WITH THE STANDARD SPECIFICATIONS.

USE AN ASTM F436 HARDENED WASHER WITH STANDARD AND SLOTTED HOLES UNDER EACH BOLT HEAD AND NUT.

FOR BOLTS THROUGH THE GIRDER WEB, PROVIDE SUFFICIENT LENGTH OF THREADS ON ALL BOLTS TO ACCOMMODATE WASHERS AND THE THICKNESS OF CONNECTING MEMBER PLUS AT LEAST ¼" PROJECTION BEYOND THE NUT.

INTERMEDIATE DIAPHRAGM ASSEMBLY SHALL COMPLY WITH SECTION 1072 OF THE STANDARD SPECIFICATIONS.

SUBMIT TWO SETS OF WORKING DRAWINGS FOR THE INTERMEDIATE DIAPHRAGM ASSEMBLY FOR REVIEW, COMMENTS AND ACCEPTANCE. AFTER REVIEW, COMMENTS, AND ACCEPTANCE, SUBMIT SEVEN SETS FOR DISTRIBUTION.

IN THE EXTERIOR BAYS, PLACE TEMPORARY STRUTS BETWEEN PRESTRESSED GIRDERS ADJACENT TO THE STEEL DIAPHRAGMS. STRUTS SHALL REMAIN IN PLACE 3 DAYS AFTER CONCRETE IS PLACED.

THE COST OF THE STEEL DIAPHRAGMS AND ASSEMBLIES SHALL BE INCLUDED IN THE UNIT PRICE BID FOR PRESTRESSED CONCRETE GIRDERS.

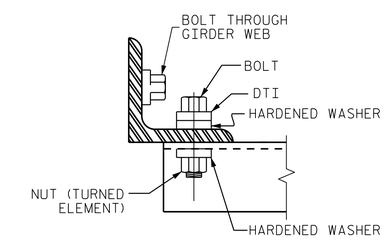

BOLT WITH DTI ASSEMBLY DETAIL

PROJECT NO. 17BP.3.R.80

BRUNSWICK COUNTY

STATION: 20+18.00 -L-

SHEET 3 OF 3

DOCUMENT NOT CONSIDERED FINAL UNLESS ALL SIGNATURES COMPLETED

CDM Smith
CDM SMITH
5400 Glenwood Avenue, Suite 400
Raleigh, NC 27612-3228
NC COA No. F-1255

DRAWN BY :	JJR	DATE :	04/21
CHECKED BY :	THF	DATE :	06/21
DESIGN ENGINEER :	VDK	DATE :	07/21

DWG. No.

NORTH CAROLINA PROFESSIONAL SEAL 16301 ENGINEER TING HSIUNG FANG

Ting H. Fang 1/5/2022

STATE OF NORTH CAROLINA
DEPARTMENT OF TRANSPORTATION
RALEIGH

INTERMEDIATE STEEL DIAPHRAGMS FOR TYPE III PRESTRESSED CONCRETE GIRDERS

REVISIONS						SHEET NO.
NO.	BY:	DATE:	NO.	BY:	DATE:	S-12
1			3			TOTAL SHEETS
2			4			26

FILE: SFILES
DATE: SDATES
STIMES

DocuSign Envelope ID: A27F7C84-2974-4854-8CAA-5229470C9BC1

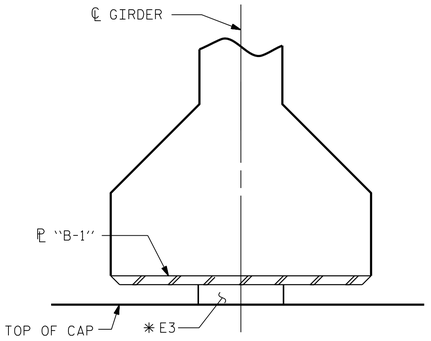

SECTION F-F

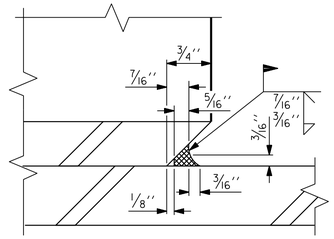

DETAIL "A"

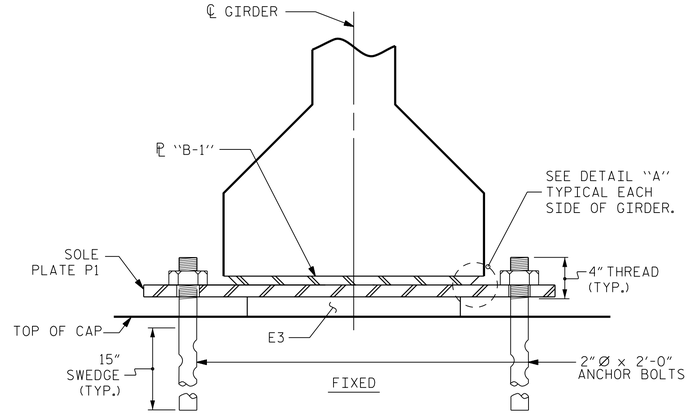

SECTION E-E

AT BENT 1

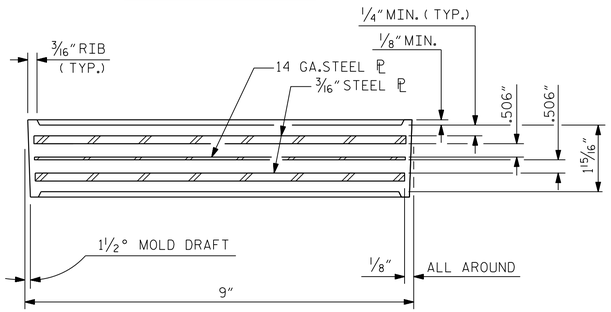

TYPICAL SECTION OF ELASTOMERIC BEARING

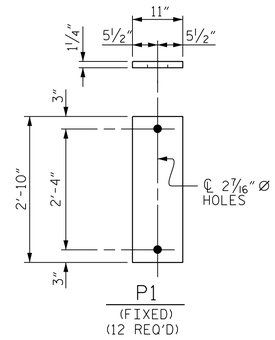

SOLE PLATE DETAILS

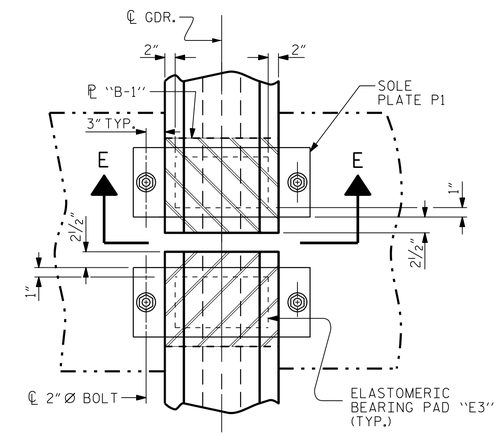

PLAN VIEW @ BENT 1

AT BENT 1

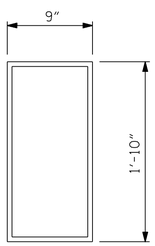

E3 (12 REQ'D)

PLAN VIEW OF ELASTOMERIC PAD

ROTATE BEARING PAD "E3" BY 90° AT INTEGRAL END BENTS

TYPE IV

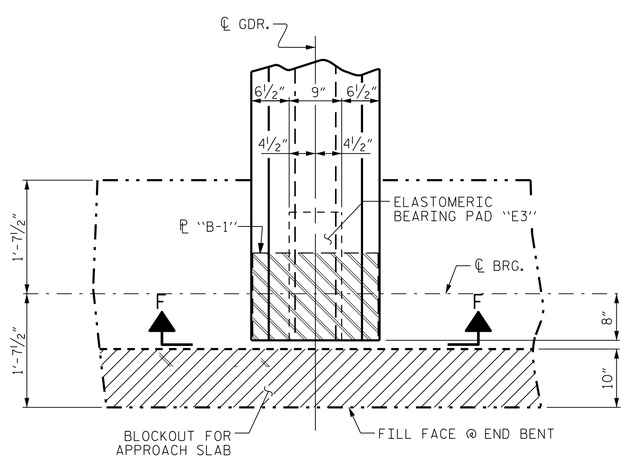

TYPICAL PLAN @ END BENT

AT INTEGRAL END BENT

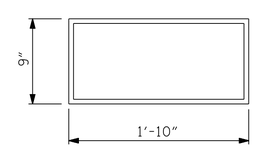

E3 (12 REQ'D)

PLAN VIEW OF ELASTOMERIC BEARING

AT BENT 1

TYPE IV

NOTES

AT ALL FIXED POINTS OF SUPPORT, NUTS FOR ANCHOR BOLTS ARE TO BE TIGHTENED FINGER TIGHT AND THEN BACKED OFF 1/2 TURN. THE THREAD OF THE NUT AND BOLT SHALL THEN BE BURRED WITH A SHARP POINTED TOOL.

STEEL SOLE PLATES, ANCHOR BOLTS AND NUTS, SHALL BE GALVANIZED IN ACCORDANCE WITH THE STANDARD SPECIFICATIONS.

PRIOR TO WELDING, GRIND THE GALVANIZED SURFACE OF THE PORTION OF THE EMBEDDED PLATE AND SOLE PLATE THAT ARE TO BE WELDED. AFTER WELDING, DAMAGED GALVANIZED SURFACES SHALL BE REPAIRED IN ACCORDANCE WITH THE STANDARD SPECIFICATIONS.

WHEN WELDING THE SOLE PLATE TO THE EMBEDDED PLATE IN THE GIRDER, USE TEMPERATURE INDICATING WAX PENS, OR OTHER SUITABLE MEANS, TO ENSURE THAT THE TEMPERATURE OF THE SOLE PLATE DOES NOT EXCEED 300°F. TEMPERATURES ABOVE THIS MAY DAMAGE THE ELASTOMER.

SOLE PLATE P1, BOLTS AND NUTS SHALL BE INCLUDED IN THE PAY ITEM FOR PRESTRESSED CONCRETE GIRDERS.

ANCHOR BOLTS SHALL MEET THE REQUIREMENTS OF ASTM A449. NUTS SHALL MEET THE REQUIREMENTS OF AASHTO M291-DH OR AASHTO M292-2H. SHOP DRAWINGS ARE NOT REQUIRED FOR ANCHOR BOLT AND NUTS SHOP INSPECTION IS REQUIRED.

ALL SURFACES OF BEARING PLATES SHALL BE SMOOTH AND STRAIGHT.

THE ELASTOMER IN THE STEEL REINFORCED BEARINGS SHALL HAVE A SHEAR MODULUS OF 0.160 KSI, IN ACCORDANCE WITH AASHTO M251.

FOR STEEL REINFORCED ELASTOMERIC BEARINGS, SEE SPECIAL PROVISIONS.

ALL SOLE PLATES SHALL BE AASHTO M270 GRADE 36.

MAXIMUM ALLOWABLE SERVICE LOADS	
D.L.+L.L. (NO IMPACT)	
TYPE IV	225 k

PROJECT NO. 17BP.3.R.80

BRUNSWICK COUNTY

STATION: 20+18.00 -L-

STATE OF NORTH CAROLINA
DEPARTMENT OF TRANSPORTATION
RALEIGH

ELASTOMERIC BEARING DETAILS

PRESTRESSED CONCRETE GIRDER SUPERSTRUCTURE

DOCUMENT NOT CONSIDERED FINAL UNLESS ALL SIGNATURES COMPLETED

CDM Smith
CDM SMITH
5400 Glenwood Avenue, Suite 400
Raleigh, NC 27612-3228
NC COA No. F-1255

DRAWN BY :	JJR	DATE :	04/21
CHECKED BY :	THF	DATE :	06/21
DESIGN ENGINEER :	VDK	DATE :	07/21

DWG. No.

NORTH CAROLINA PROFESSIONAL SEAL 16301 ENGINEER TING-HSIUNG FANG

Ting H. Fang
DocuSigned by:
6BE7E9CAF9AA469...
1/6/2022

REVISIONS						SHEET NO.
NO.	BY:	DATE:	NO.	BY:	DATE:	S-13
1			3			TOTAL SHEETS
2			4			26

FILE: $FILES
DATE: $DATES
STYMES

DocuSign Envelope ID: 2BDD4FF0-40BD-4345-9C22-912B7DC6BCB1

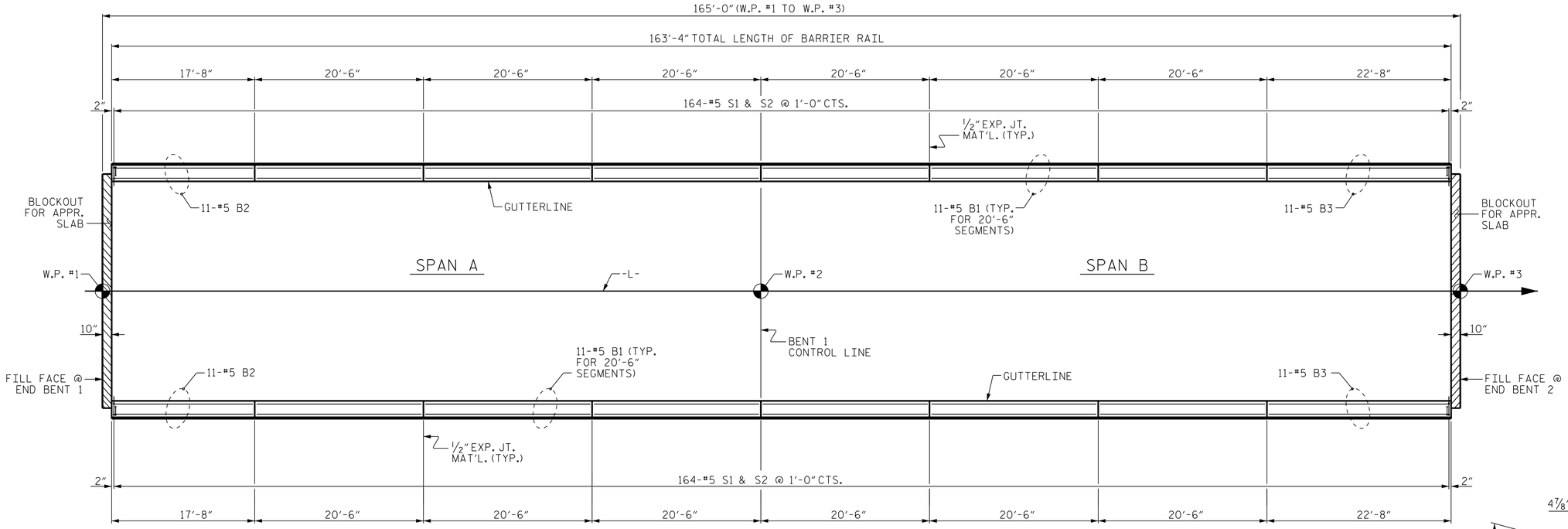

PLAN OF CONCRETE BARRIER RAIL

DIMENSIONS ARE MEASURED ALONG OUTSIDE FACE OF BARRIER RAIL.

BAR TYPES

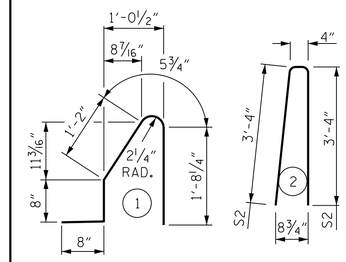

ALL BAR DIMENSIONS ARE OUT TO OUT

BILL OF MATERIAL

FOR CONCRETE BARRIER RAIL ONLY

BAR	NO.	SIZE	TYPE	LENGTH	WEIGHT
* B1	132	#5	STR	20'-2"	2776
* B2	22	#5	STR	17'-4"	398
* B3	22	#5	STR	22'-4"	812
* S1	328	#5	1	4'-8"	1645
* S2	328	#5	2	7'-0"	2468

* EPOXY COATED REINFORCING STEEL	7,799
CLASS AA CONCRETE	44.4 CU. YDS.
CONCRETE BARRIER RAIL	326.67 LIN. FT.

NOTES

THE BARRIER RAIL SHALL NOT BE CAST UNTIL ALL SLAB CONCRETE IN THAT UNIT HAS BEEN CAST AND HAS REACHED A MINIMUM COMPRESSIVE STRENGTH OF 3,000 PSI.

ALL REINFORCING STEEL IN BARRIER RAILS SHALL BE EPOXY COATED.

GROOVED CONTRACTION JOINTS, 1/2" IN DEPTH, SHALL BE TOOLED IN ALL EXPOSED FACES OF THE BARRIER RAIL AND IN ACCORDANCE WITH ARTICLE 825-10(B) OF THE STANDARD SPECIFICATIONS. THE CONTRACTION JOINT SHALL BE LOCATED AT EACH THIRD POINT BETWEEN BARRIER RAIL EXPANSION JOINTS. ONLY ONE CONTRACTION JOINT IS REQUIRED AT MIDPOINT OF BARRIER RAIL SEGMENTS LESS THAN 20 FEET IN LENGTH AND NO CONTRACTION JOINTS ARE REQUIRED FOR THOSE SEGMENTS LESS THAN 10 FEET IN LENGTH.

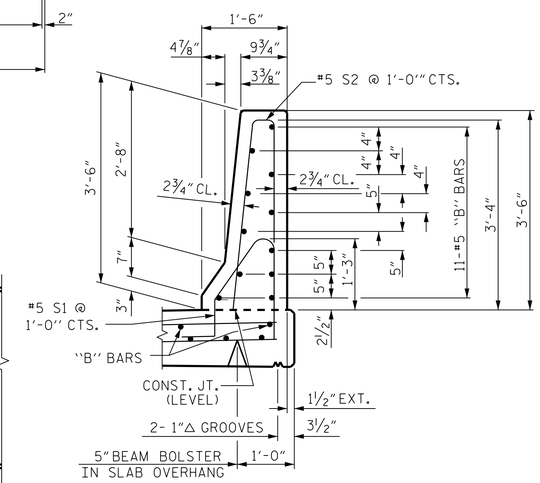

SECTION THRU RAIL

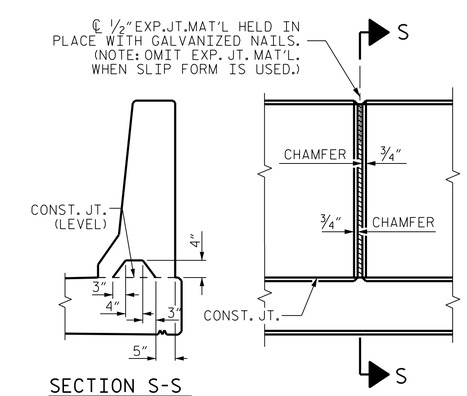

SECTION S-S

AT DAM IN OPEN JOINT (THIS IS TO BE USED ONLY WHEN SLIP FORM IS USED)

ELEVATION AT EXPANSION JOINTS

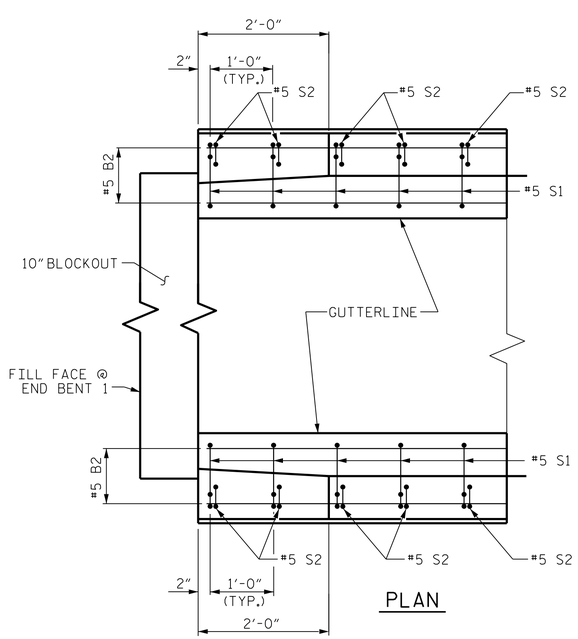

PLAN

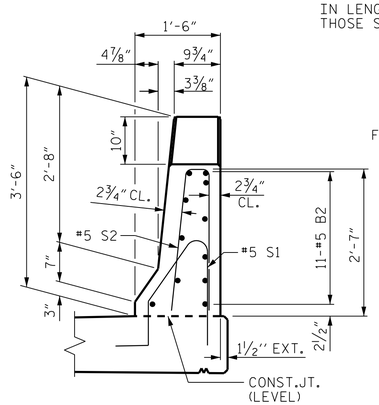

END VIEW

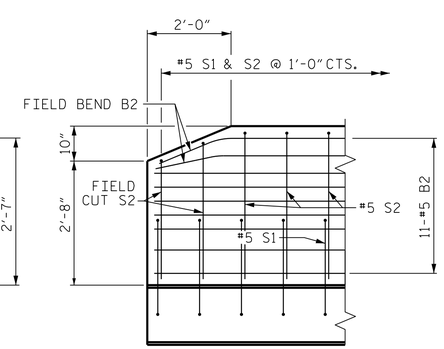

SIDE VIEW

END OF RAIL DETAILS

BARRIER RAIL DETAILS

PROJECT NO. 17BP.3.R.80

BRUNSWICK COUNTY

STATION: 20+18.00 -L-

STATE OF NORTH CAROLINA
DEPARTMENT OF TRANSPORTATION
RALEIGH
SUPERSTRUCTURE

CONCRETE PARAPET & END POST DETAILS

DOCUMENT NOT CONSIDERED FINAL UNLESS ALL SIGNATURES COMPLETED

CDM Smith
CDM SMITH
5400 Glenwood Avenue, Suite 400
Raleigh, NC 27612-3228
NC COA No. F-1255

DRAWN BY : JJR DATE : 04/21
CHECKED BY : THF DATE : 06/21
DESIGN ENGINEER : VDK DATE : 07/21

DWG. No.

NORTH CAROLINA PROFESSIONAL SEAL 16301 ENGINEER TING-HSIUNG FANG
DocuSigned by: Ting H. Fang
1/5/2022

REVISIONS								SHEET NO.
NO.	BY:	DATE:	NO.	BY:	DATE:			S-14
1			3					TOTAL SHEETS
2			4					26

DRAWN BY :	ARB	5/87
CHECKED BY :	SJD	9/87

REV. 10/1/11	MAA/GM
REV. 7/12	MAA/GM
REV. 6/13	MAA/GM

FILE: SFILES
DATE: SDATES
STAMES

STD. NO. CBR1 (SHT 2)

DocuSign Envelope ID: 2BDD4FF0-40BD-4345-9C22-912B7DC6BCB1

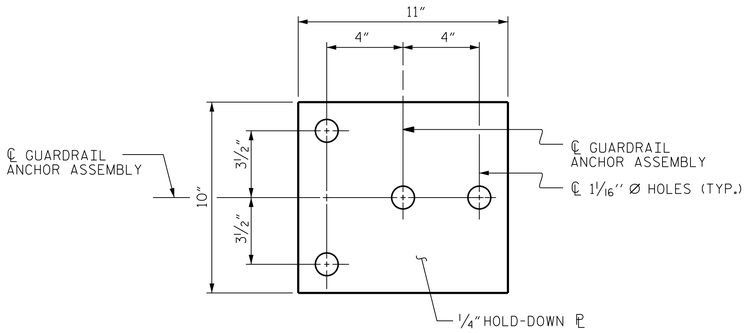

PLAN

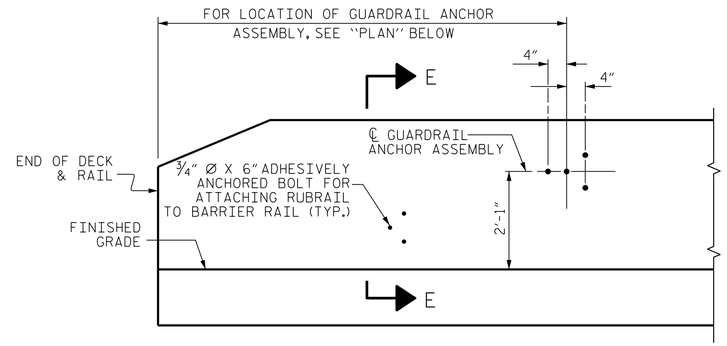

ELEVATION

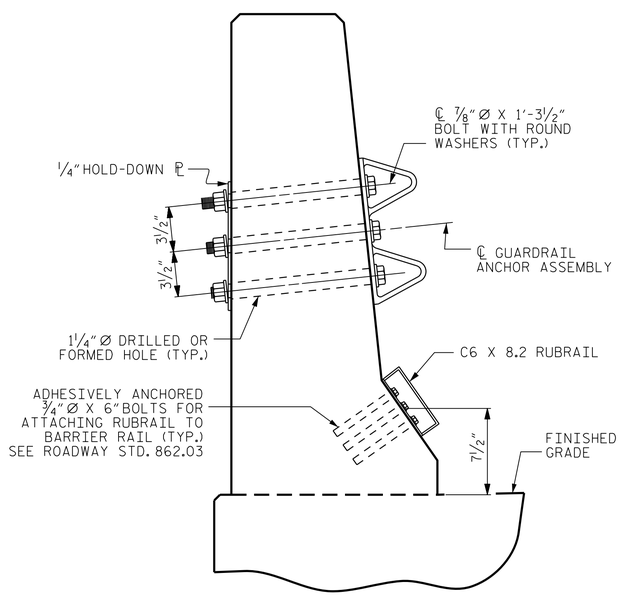

SECTION E-E

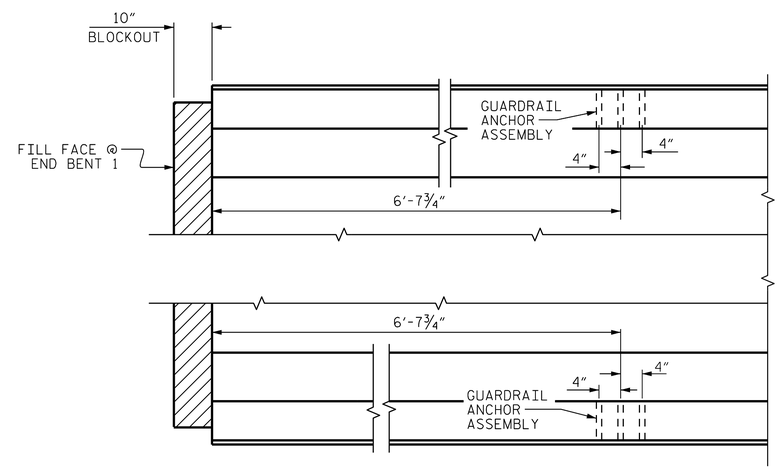

PLAN

LOCATION OF ANCHORS FOR GUARDRAIL

END BENT 1 SHOWN, END BENT 2 SIMILAR.

GUARDRAIL ANCHOR ASSEMBLY DETAILS

NOTES

THE GUARDRAIL ANCHOR ASSEMBLY SHALL CONSIST OF A 1/4" HOLD-DOWN PLATE AND 4 - 7/8" Ø BOLTS WITH NUTS AND WASHERS, RUBRAIL, AND ADHESIVELY ANCHORED BOLTS.

THE HOLD-DOWN PLATE SHALL CONFORM TO AASHTO M270 GRADE 36. AFTER FABRICATION, THE HOLD-DOWN PLATE SHALL BE HOT-DIP GALVANIZED IN ACCORDANCE WITH AASHTO M111.

BOLTS SHALL CONFORM TO THE REQUIREMENTS OF ASTM A307 AND NUTS SHALL CONFORM TO THE REQUIREMENTS OF AASHTO M291. BOLTS, NUTS AND WASHERS SHALL BE GALVANIZED. (AT THE CONTRACTOR'S OPTION, STAINLESS STEEL BOLTS, NUTS AND WASHERS MAY BE USED AS AN ALTERNATE FOR THE 7/8" Ø GALVANIZED BOLTS, NUTS AND WASHERS. THEY SHALL CONFORM TO OR EXCEED THE MECHANICAL REQUIREMENTS OF ASTM A307. THE USE OF THIS ALTERNATE SHALL BE APPROVED BY THE ENGINEER.)

THE GUARDRAIL ANCHOR ASSEMBLY IS REQUIRED AT ALL POINTS WHERE APPROACH GUARDRAIL IS TO BE ATTACHED TO THE END OF BARRIER RAIL. FOR POINTS OF ATTACHMENT, SEE SKETCH.

AFTER INSTALLATION, THE EXPOSED THREAD OF THE BOLT SHALL BE BURRED WITH A SHARP POINTED TOOL.

THE COST OF THE GUARDRAIL ANCHOR ASSEMBLY SHALL BE INCLUDED IN THE UNIT CONTRACT PRICE BID FOR CONCRETE BARRIER RAIL.

THE 1 1/4" Ø HOLES SHALL BE FORMED OR DRILLED WITH A CORE BIT. IMPACT TOOLS WILL NOT BE PERMITTED. ANY CONCRETE DAMAGED BY THIS WORK SHALL BE REPAIRED TO THE SATISFACTION OF THE ENGINEER.

THE C6 X 8.2 RUBRAIL IS TO BE ADHESIVELY ANCHORED TO THE RAIL USING THREE 3/4" Ø X 6" BOLTS WITH WASHERS. LEVEL ONE FIELD TESTING IS REQUIRED, AND THE
YIELD LOAD OF THE 3/4" Ø BOLT IS 12 KIPS. FOR ADHESIVELY ANCHORED ANCHOR BOLTS OR DOWELS, SEE STANDARD SPECIFICATIONS. SEE ROADWAY STANDARD 862.03 FOR DETAILS AND LOCATION OF THE RUBRAIL.

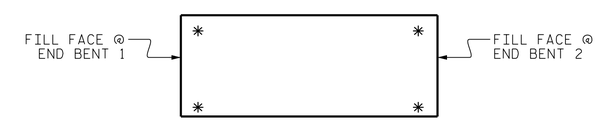

SKETCH SHOWING POINTS OF ATTACHMENTS

✱ DENOTES GUARDRAIL ANCHOR ASSEMBLY

PROJECT NO. 17BP.3.R.80
BRUNSWICK COUNTY
STATION: 20+18.00 -L-

DOCUMENT NOT CONSIDERED FINAL UNLESS ALL SIGNATURES COMPLETED

CDM Smith
CDM SMITH
5400 Glenwood Avenue, Suite 400
Raleigh, NC 27612-3228
NC COA No. F-1255

DRAWN BY : JJR DATE : 04/21
CHECKED BY : THF DATE : 06/21
DESIGN ENGINEER : VDK DATE : 07/21

DWG. No.

NORTH CAROLINA PROFESSIONAL SEAL 16301 ENGINEER TING HSIUNG FANG
DocuSigned by: Ting H. Fang
DocID: 5BC4FBAA469...
1/5/2022

STATE OF NORTH CAROLINA
DEPARTMENT OF TRANSPORTATION
RALEIGH

GUARDRAIL ANCHORAGE DETAILS FOR CONCRETE BARRIER RAIL

REVISIONS						SHEET NO.
NO.	BY:	DATE:	NO.	BY:	DATE:	S-15
1			3			TOTAL SHEETS
2			4			26

FILE: SFILES
DATE: $DATE$

STD. NO. BMR2

DocuSign Envelope ID: 2BDD4FF0-40BD-4345-9C22-912B7DC6BCB1

SUPERSTRUCTURE REINFORCING STEEL LENGTHS ARE BASED ON THE FOLLOWING MINIMUM SPLICE LENGTHS					
BAR SIZE	SUPERSTRUCTURE EXCEPT APPROACH SLABS, PARAPETS, AND BARRIER RAILS		APPROACH SLABS		PARAPETS AND BARRIER RAILS
	EPOXY COATED	UNCOATED	EPOXY COATED	UNCOATED	
#4	1'-11"	1'-7"	1'-11"	1'-7"	2'-6"
#5	2'-5"	2'-0"	2'-5"	2'-0"	3'-1"
#6	2'-10"	2'-5"	3'-7"	2'-5"	3'-8"
#7	4'-2"	2'-9"			
#8	4'-9"	3'-2"			

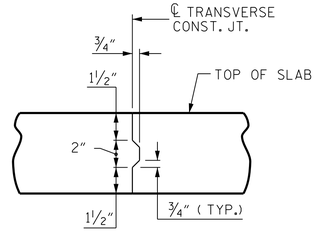

TRANSVERSE CONSTRUCTION JOINT DETAIL

BAR TYPES

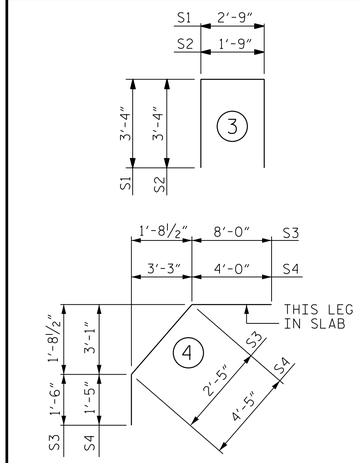

ALL BAR DIMENSIONS ARE OUT TO OUT

BILL OF MATERIAL

BAR	NO.	SIZE	TYPE	LENGTH	WEIGHT
✳ A1	327	#5	STR	42'-11"	14637
✳ A2	109	#5	STR	3'-2"	231
✳ B1	171	#4	STR	25'-1"	2865
✳ B2	113	#5	STR	19'-7"	2308
✳ B3	8	#4	STR	42'-8"	228
✳ B4	171	#4	STR	26'-8"	3046
✳ B5	56	#6	STR	15'-0"	1262
✳ B6	56	#6	STR	16'-0"	1346
✳ B7	32	#5	STR	42'-8"	1424
✳ K1	16	#4	STR	22'-5"	240
✳ K2	10	#4	STR	5'-2"	35
✳ K3	20	#4	STR	6'-5"	86
✳ K4	10	#4	STR	5'-8"	38
✳ K5	8	#4	STR	2'-0"	11
✳ K6	16	#4	STR	2'-8"	29
✳ K7	8	#4	STR	2'-3"	12
✳ S1	68	#4	3	9'-5"	428
✳ S2	4	#4	3	8'-5"	22
✳ S3	68	#4	4	11'-11"	541
✳ S4	68	#4	4	9'-10"	447

✳ EPOXY COATED REINF. STEEL = 29,234 LBS

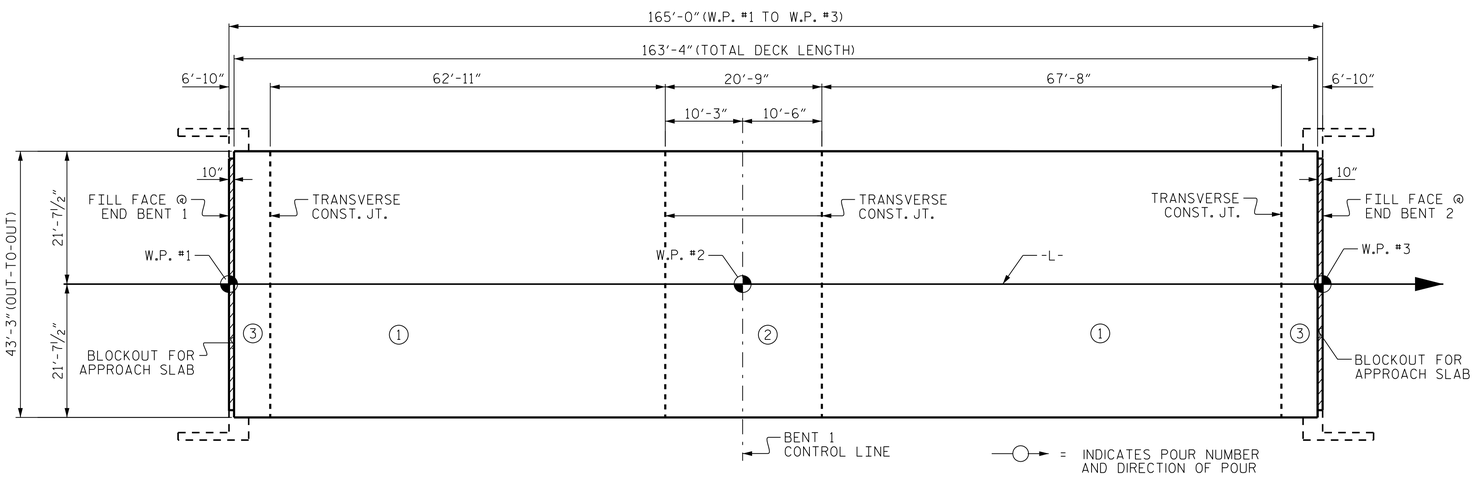

OPTIONAL POURING SEQUENCE

POUR 2 CANNOT BE STARTED UNTIL BOTH ADJACENT POUR 1 REACH A MINIMUM OF 3000 PSI RESPECTIVELY. SEE TRANSVERSE CONSTRUCTION JOINT DETAIL

SUPERSTRUCTURE BILL OF MATERIAL			
	CLASS AA CONCRETE	REINFORCING STEEL	EPOXY COATED REINFORCING STEEL
	(CU. YDS.)	(LBS.)	(LBS.)
POUR 1	107.2		
POUR 2	17.2		
POUR 3	39.7		
TOTAL ✳✳	164.1		29,234

✳✳ QUANTITY FOR CONCRETE PARAPETS ARE NOT INCLUDED

GROOVING BRIDGE FLOORS	
APPROACH SLABS	1,776 SQ.FT.
BRIDGE DECK	6,031 SQ.FT.
TOTAL	7,807 SQ.FT.

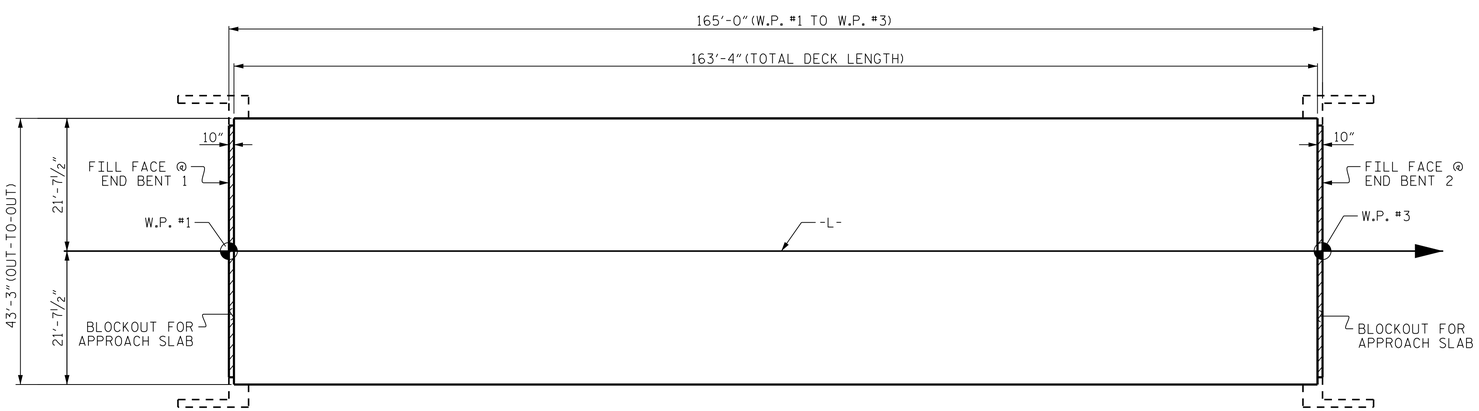

LAYOUT FOR COMPUTING AREA OF REINFORCED CONCRETE DECK SLAB (SQ. FT. = 7,064)

PROJECT NO. 17BP.3.R.80
BRUNSWICK COUNTY
STATION: 20+18.00 -L-

DOCUMENT NOT CONSIDERED FINAL UNLESS ALL SIGNATURES COMPLETED

CDM Smith
CDM SMITH
5400 Glenwood Avenue, Suite 400
Raleigh, NC 27612-3228
NC COA No. F-1255

DRAWN BY : JJR DATE : 04/21
CHECKED BY : THF DATE : 06/21
DESIGN ENGINEER : VDK DATE : 07/21

DWG. No.

NORTH CAROLINA PROFESSIONAL SEAL 16301 ENGINEER TING HSIUNG FANG
Ting H. Fang
1/5/2022

STATE OF NORTH CAROLINA
DEPARTMENT OF TRANSPORTATION
RALEIGH

SUPERSTRUCTURE

BILL OF MATERIAL & POUR SEQUENCE

REVISIONS							
NO.	BY:	DATE:	NO.	BY:	DATE:	SHEET NO.	S-16
1			3			TOTAL SHEETS	26
2			4				

FILE: $FILES
DATE: $DATE$

DocuSign Envelope ID: 2BDD4FF0-40BD-4345-9C22-912B7DC6BCB1

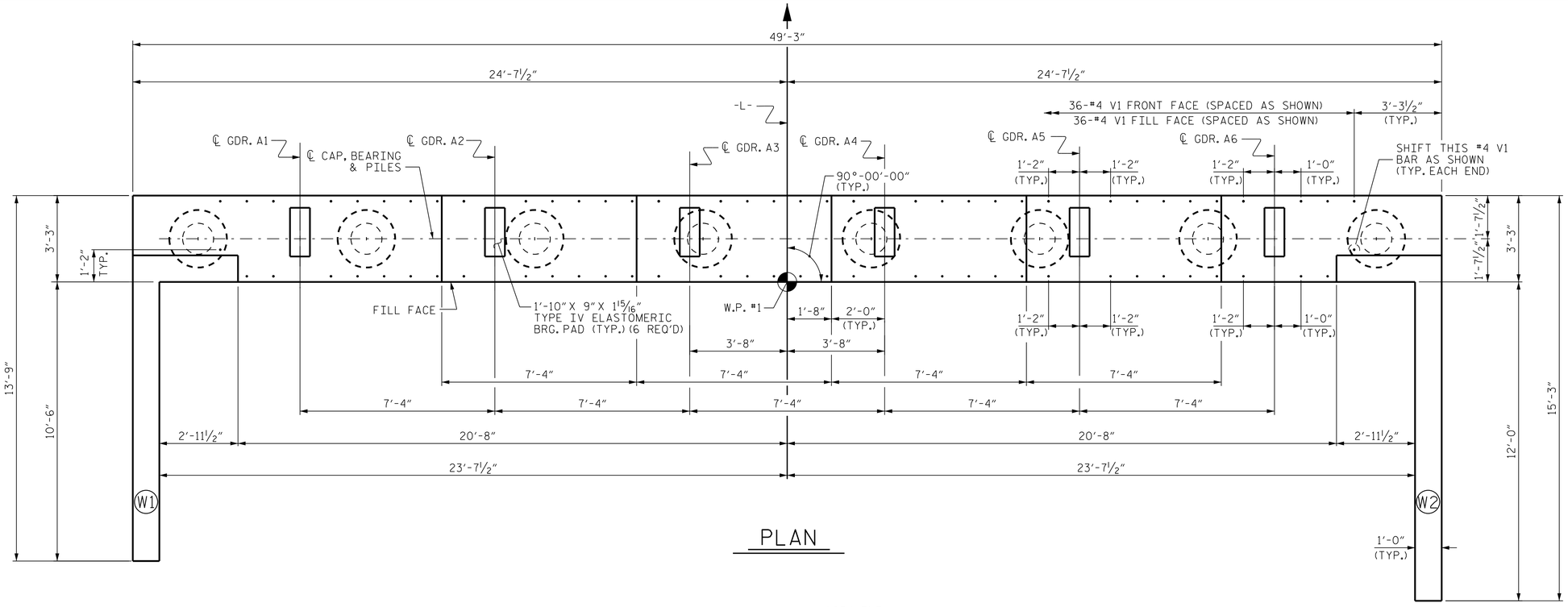

PLAN

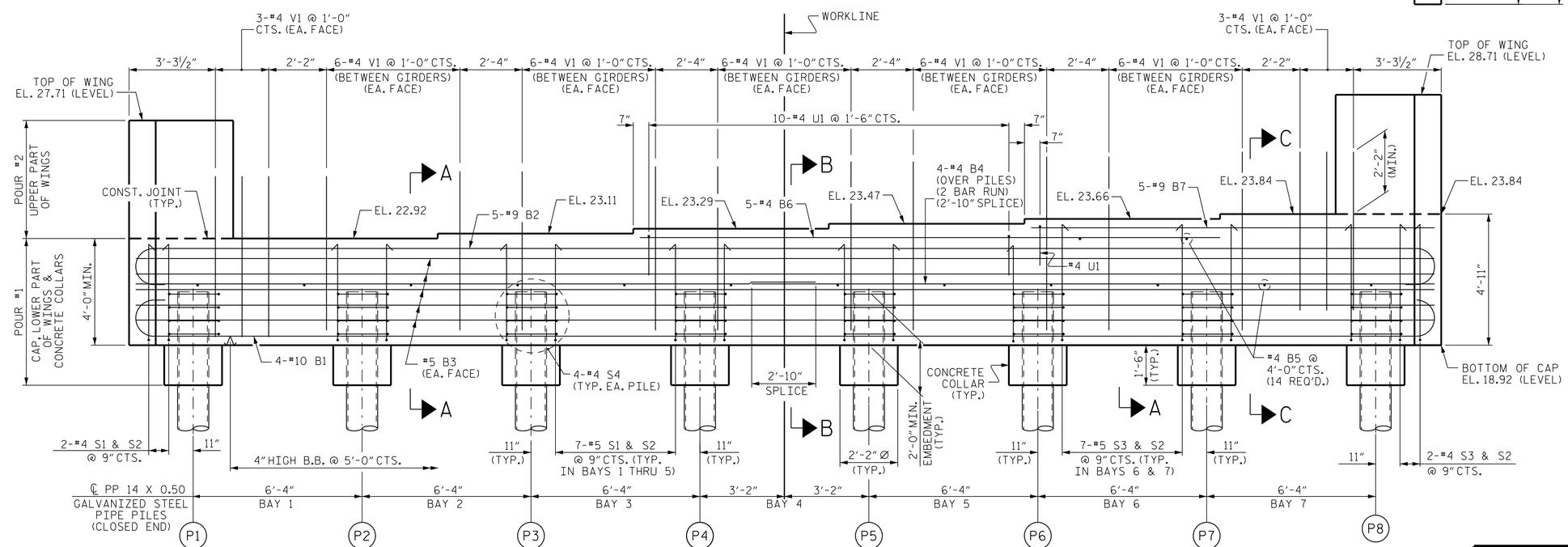

ELEVATION

WINGWALLS NOT SHOWN FOR CLARITY

NOTES

STIRRUPS IN CAP MAY BE SHIFTED AS NECESSARY TO CLEAR #4 V1 BARS.

THE TOP SURFACE OF THE END BENT CAP AND WINGS, EXCEPT THE BEARING AREA, SHALL BE RAKED TO A DEPTH OF 1/4".

THE UPPER PORTION OF THE INTEGRAL END BENT SHALL BE POURED WITH THE SUPERSTRUCTURE. SEE SUPERSTRUCTURE PLANS.

GALVANIZE THE TOP 20 FEET OF EACH END BENT PILE IN ACCORDANCE WITH SECTION 1076 OF THE STANDARD SPECIFICATIONS.

INSTALL THE 4" DIAMETER DRAIN PIPE THROUGH THE WING WALL AS REQUIRED FOR REINFORCED BRIDGE APPROACH FILLS, SEE THE ROADWAY PLANS. REINFORCING STEEL IN THE WING WALL MAY BE SHIFTED AS NECESSARY TO CLEAR THE DRAIN PIPE.

FOR WING DETAILS, SEE SHEET 3 OF 4.

FOR 14" PIPE PILE SPLICE DETAILS, SEE SHEET S-21.

PROJECT NO. 17BP.3.R.80
BRUNSWICK COUNTY
STATION: 20+18.00 -L-

SHEET 1 OF 4

STATE OF NORTH CAROLINA
DEPARTMENT OF TRANSPORTATION
RALEIGH

SUBSTRUCUTRE

END BENT 1 (INTEGRAL)

DOCUMENT NOT CONSIDERED FINAL UNLESS ALL SIGNATURES COMPLETED

CDM Smith
CDM SMITH
5400 Glenwood Avenue, Suite 400
Raleigh, NC 27612-3228
NC COA No. F-1255

DRAWN BY : JJR DATE : 04/21
CHECKED BY : THF DATE : 06/21
DESIGN ENGINEER : VDK DATE : 07/21

DWG. No.

NORTH CAROLINA PROFESSIONAL SEAL 16301 ENGINEER TING HSIUNG FANG
DocuSigned by: Ting H. Fang
1/5/2022

REVISIONS						
NO.	BY:	DATE:	NO.	BY:	DATE:	
1			3			
2			4			

SHEET NO. S-17
TOTAL SHEETS 26

FILE: SFILES
DATE: SDATES
STAMES

DocuSign Envelope ID: 2BDD4FF0-40BD-4345-9C22-912B7DC6BCB1

FOR NOTES, SEE SHEET 1 OF 4.

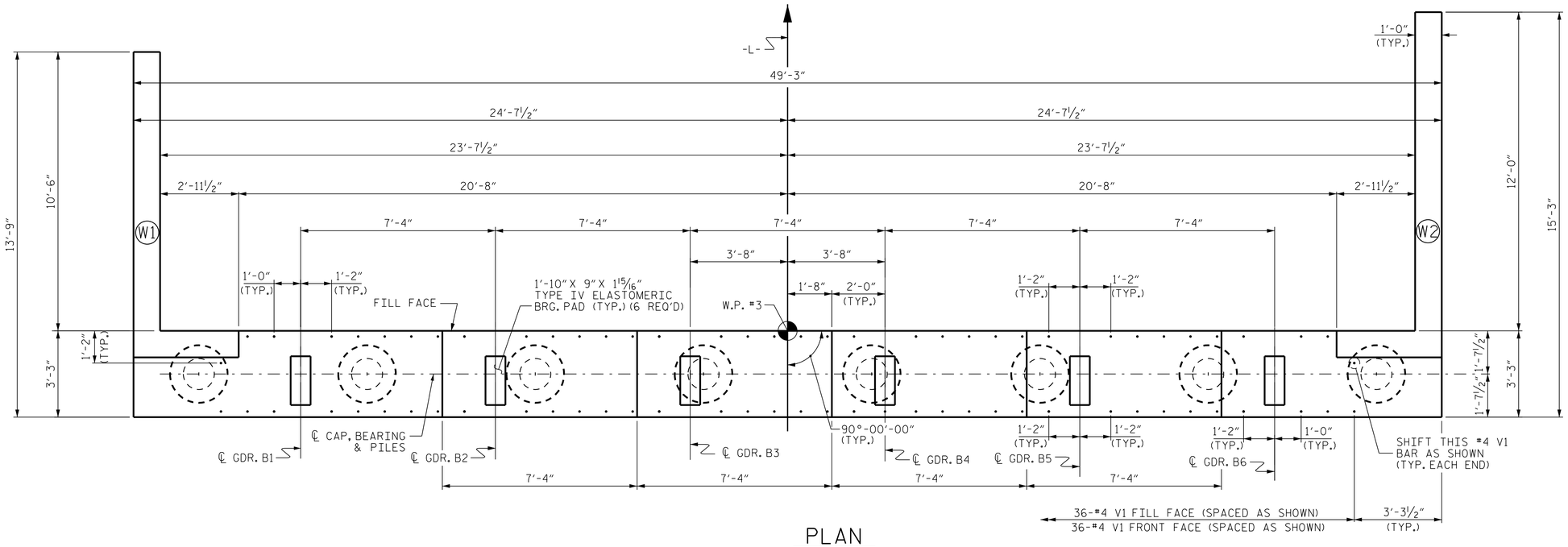

PLAN

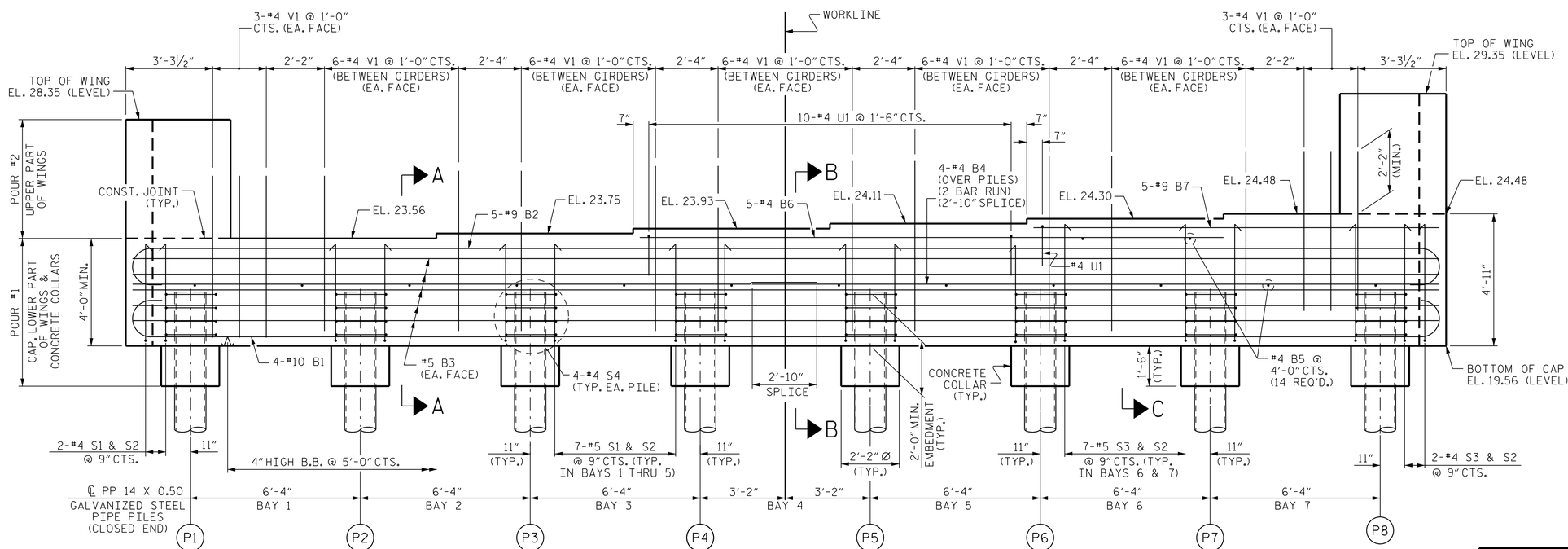

ELEVATION

WINGWALLS NOT SHOWN FOR CLARITY

PROJECT NO. 17BP.3.R.80

BRUNSWICK COUNTY

STATION: 20+18.00 -L-

SHEET 2 OF 4

STATE OF NORTH CAROLINA
DEPARTMENT OF TRANSPORTATION
RALEIGH

SUBSTRUCUTRE

END BENT 2
(INTEGRAL)

DOCUMENT NOT CONSIDERED FINAL UNLESS ALL SIGNATURES COMPLETED

CDM Smith
CDM SMITH
5400 Glenwood Avenue, Suite 400
Raleigh, NC 27612-3228
NC COA No. F-1255

DRAWN BY : JJR DATE : 04/21
CHECKED BY : THF DATE : 06/21
DESIGN ENGINEER : VDK DATE : 07/21

DWG. No.

NORTH CAROLINA PROFESSIONAL SEAL 16301 ENGINEER TING HSIUNG FANG
Ting H. Fang
1/5/2022

REVISIONS						SHEET NO.
NO.	BY:	DATE:	NO.	BY:	DATE:	S-18
1			3			TOTAL SHEETS
2			4			26

FILE: SFILES
DATE: SDATES
STIMES

DocuSign Envelope ID: 2BDD4FF0-40BD-4345-9C22-912B7DC6BCB1

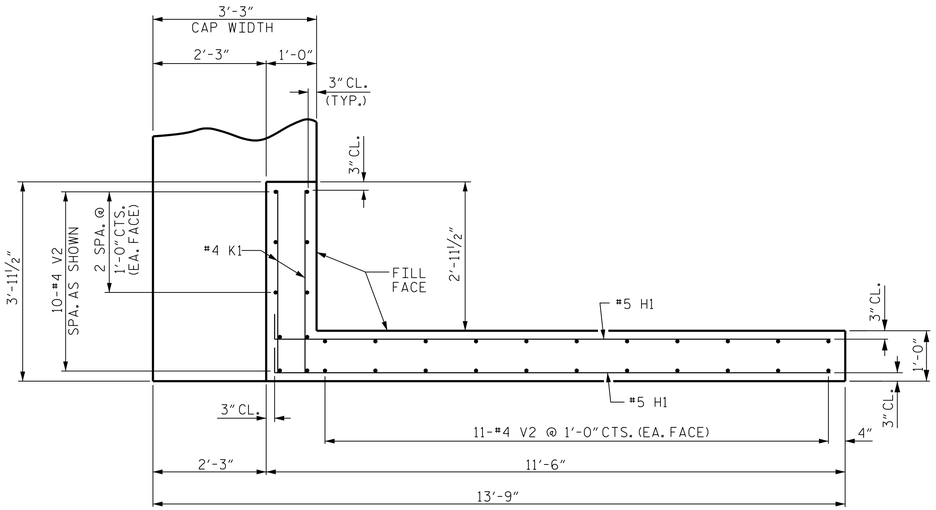

PLAN OF WING (W1)

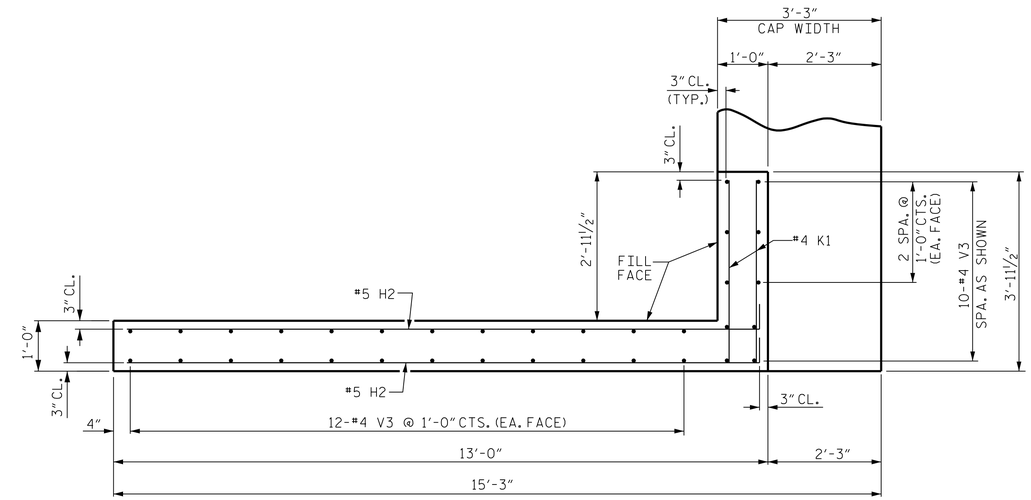

PLAN OF WING (W2)

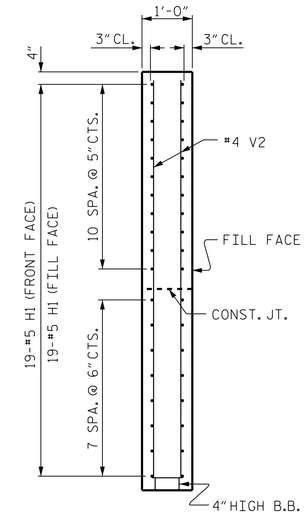

SECTION X-X

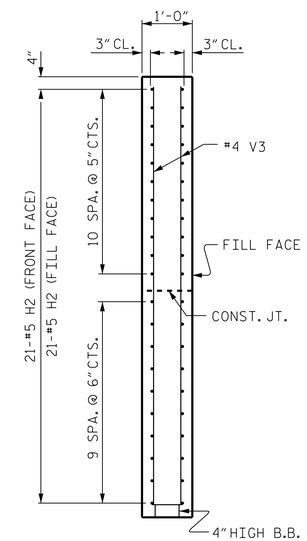

SECTION Y-Y

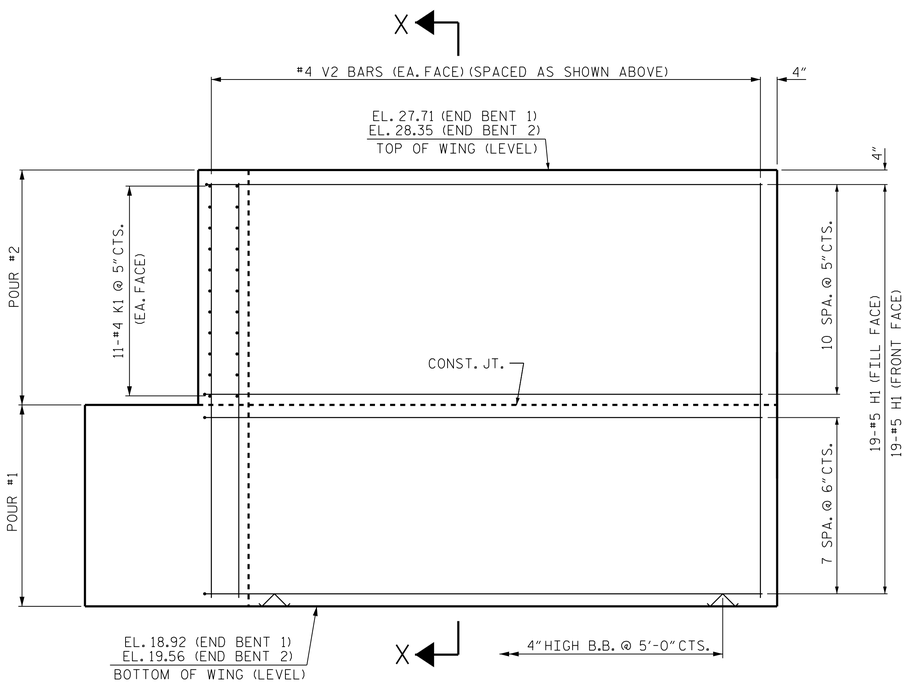

ELEVATION OF WING (W1)

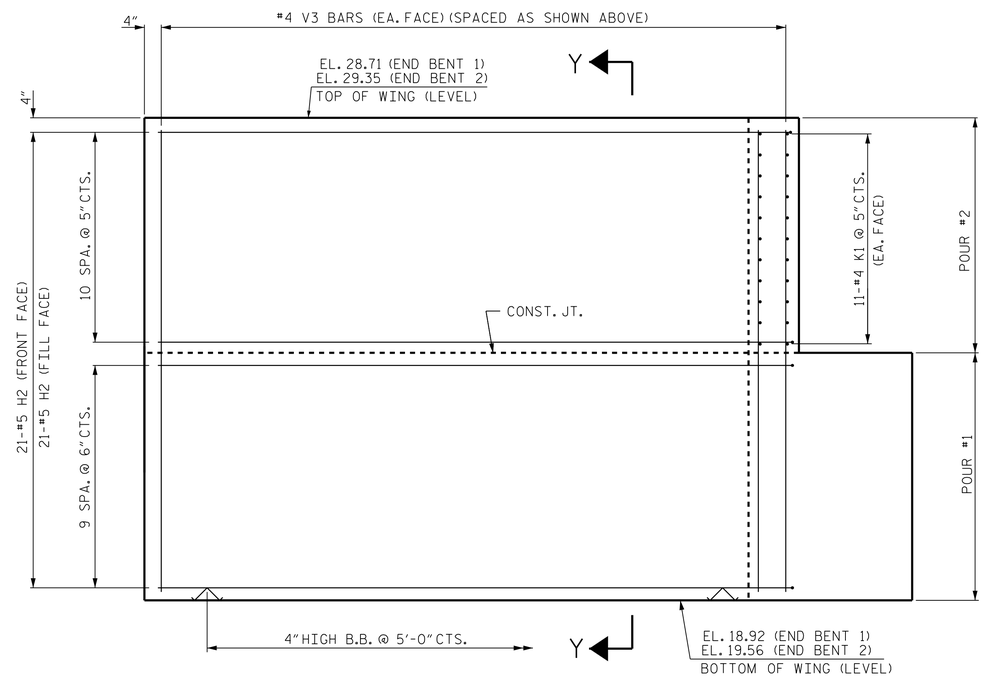

ELEVATION OF WING (W2)

WING DETAILS

PROJECT NO. 17BP.3.R.80
BRUNSWICK COUNTY
STATION: 20+18.00 -L-

SHEET 3 OF 4

DOCUMENT NOT CONSIDERED FINAL UNLESS ALL SIGNATURES COMPLETED

CDM Smith
CDM SMITH
5400 Glenwood Avenue, Suite 400
Raleigh, NC 27612-3228
NC COA No. F-1255

DRAWN BY : JJR DATE : 04/21
CHECKED BY : THF DATE : 06/21
DESIGN ENGINEER : VDK DATE : 07/21

DWG. No.

NORTH CAROLINA PROFESSIONAL SEAL 16301 ENGINEER TING HSIUNG FANG
DocuSigned by: Ting H. Fang
1/31/2022 CAF9AA469...

STATE OF NORTH CAROLINA
DEPARTMENT OF TRANSPORTATION
RALEIGH

SUPERSTRUCTURE

END BENTS 1 & 2
WING DETAILS

REVISIONS								SHEET NO.
NO.	BY:	DATE:	NO.	BY:	DATE:			S-19
1			3					TOTAL SHEETS
2			4					26

FILE: $FILES
DATE: $DATES
$TIMES

DocuSign Envelope ID: 2BDD4FF0-40BD-4345-9C22-912B7DC6BCB1

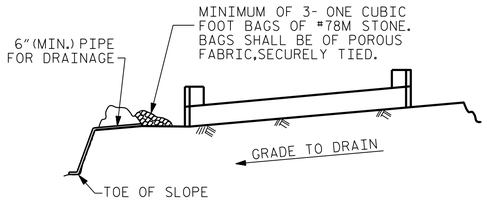

BAGGED STONE AND PIPE SHALL BE PLACED IMMEDIATELY AFTER COMPLETION OF END BENT EXCAVATION. PIPE MAY BE EITHER CONCRETE, CORRUGATED STEEL, CORRUGATED ALUMINUM ALLOY, OR CORRUGATED PLASTIC. PERFORATED PIPE WILL NOT BE ALLOWED.

BAGGED STONE SHALL REMAIN IN PLACE UNTIL THE ENGINEER DIRECTS THAT IT BE REMOVED. THE CONTRACTOR SHALL REMOVE AND DISPOSE OF SILT ACCUMULATIONS AT BAGGED STONE WHEN SO DIRECTED BY THE ENGINEER. BAGS SHALL BE REMOVED AND REPLACED WHENEVER THE ENGINEER DETERMINES THAT THEY HAVE DETERIORATED AND LOST THEIR EFFECTIVENESS.

NO SEPARATE PAYMENT WILL BE MADE FOR THIS WORK AND THE ENTIRE COST OF THIS WORK SHALL BE INCLUDED IN THE UNIT CONTRACT PRICE BID FOR THE SEVERAL PAY ITEMS.

TEMPORARY DRAINAGE AT END BENT

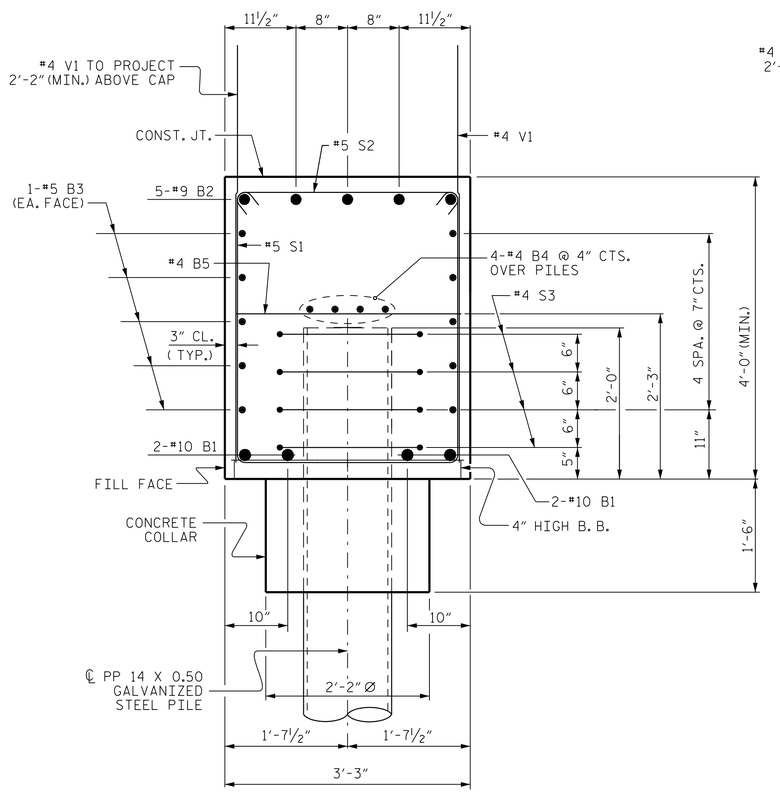

SECTION A-A

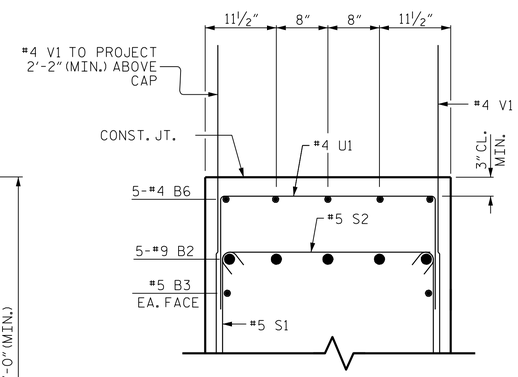

PARTIAL SECTION B-B

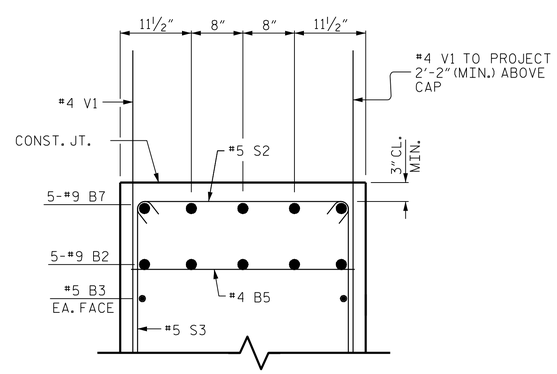

PARTIAL SECTION C-C

BAR TYPES

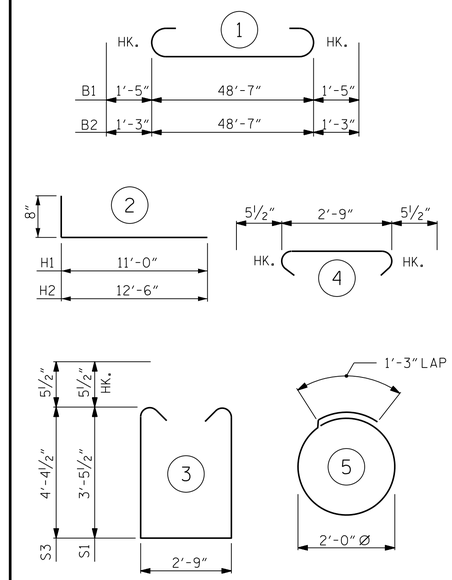

ALL BAR DIMENSIONS ARE OUT TO OUT.

BILL OF MATERIAL

FOR ONE END BENT
(2 REQUIRED)

BAR	NO.	SIZE	TYPE	LENGTH	WEIGHT
✳ B1	4	#10	1	51'-5"	885
✳ B2	5	#9	1	51'-1"	868
✳ B3	10	#5	STR	48'-9"	508
✳ B4	8	#4	STR	25'-10"	138
✳ B5	14	#4	STR	2'-9"	26
✳ B6	5	#4	STR	21'-9"	73
✳ B7	5	#9	STR	15'-1"	256
✳ H1	38	#5	2	11'-8"	462
✳ H2	42	#5	2	13'-2"	577
✳ K1	44	#4	STR	3'-5"	100
✳ S1	37	#5	3	10'-7"	408
✳ S2	53	#5	4	3'-8"	203
✳ S3	16	#5	3	12'-5"	207
✳ S4	32	#4	5	7'-7"	162
✳ V1	72	#4	STR	6'-1"	293
✳ V2	32	#4	STR	8'-3"	176
✳ V3	34	#4	STR	9'-3"	210

✳ EPOXY COATED REINFORCING STEEL LBS. 5,554

CLASS A CONCRETE BREAKDOWN:

POUR #1 - CAP, COLLARS, & LOWER WINGS	C.Y.	30.4
POUR #2 - UPPER WINGS	C.Y.	5.3
TOTAL:	C.Y.	35.7

PILE QUANTITY

END BENT 1

PILE DRIVING EQUIPMENT SETUP FOR PP 14X0.5 GALVANIZED STEEL PILES	EA.	8
PP 14X0.5 GALVANIZED STEEL PILES NO. = 8	LIN. FT.	360
STEEL PILE PLATES	EA.	8
PILE REDRIVES	EA.	4

END BENT 2

PILE DRIVING EQUIPMENT SETUP FOR PP 14X0.5 GALVANIZED STEEL PILES	EA.	8
PP 14X0.5 GALVANIZED STEEL PILES NO. = 8	LIN. FT.	320
STEEL PILE PLATES	EA.	8
PILE REDRIVES	EA.	4

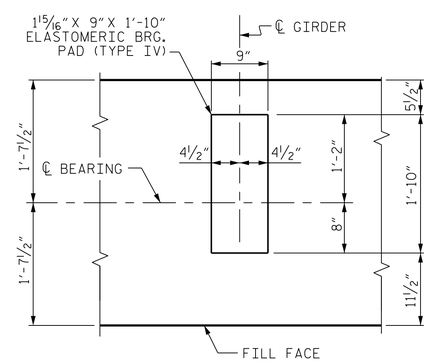

DETAIL "A"

(END BENT 1 SHOWN, END BENT 2 SIMILAR BY ROTATION)

PROJECT NO. 17BP.3.R.80
BRUNSWICK COUNTY
STATION: 20+18.00 -L-

SHEET 4 OF 4

STATE OF NORTH CAROLINA
DEPARTMENT OF TRANSPORTATION
RALEIGH

SUBSTRUCTURE

END BENTS 1 & 2
(INTEGRAL)

DOCUMENT NOT CONSIDERED FINAL UNLESS ALL SIGNATURES COMPLETED

CDM Smith
CDM SMITH
5400 Glenwood Avenue, Suite 400
Raleigh, NC 27612-3228
NC COA No. F-1255

DRAWN BY : JJR DATE : 04/21
CHECKED BY : THF DATE : 06/21
DESIGN ENGINEER : VDK DATE : 07/21

DWG. No.

NORTH CAROLINA PROFESSIONAL SEAL 16301 ENGINEER TING HSIUNG FANG
DocuSigned by: Ting H. Fang
1/5/2022

REVISIONS							SHEET NO.
NO.	BY:	DATE:	NO.	BY:	DATE:		S-20
1			3				TOTAL SHEETS
2			4				26

FILE: SPILES STINES
DATE: SDATES

DocuSign Envelope ID: 2BDD4FF0-40BD-4345-9C22-912B7DC6BCB1

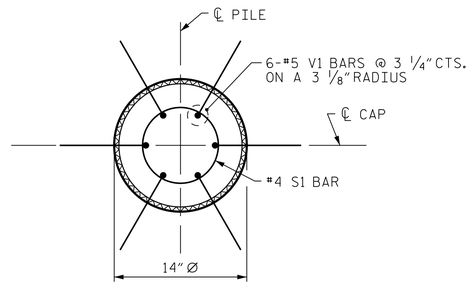

PLAN

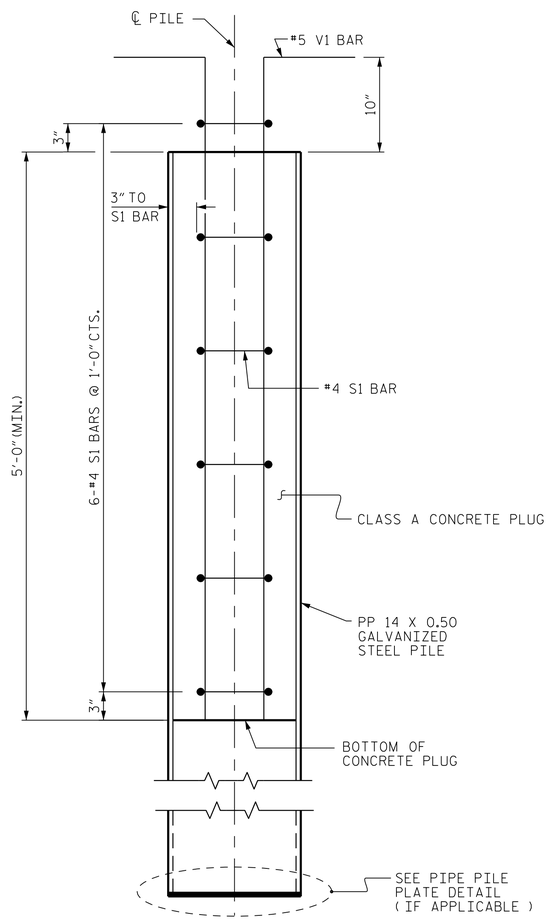

ELEVATION

PP 14 X 0.50 GALVANIZED STEEL PILE

(OPEN OR CLOSED END)

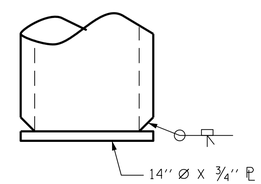

PIPE PILE PLATE DETAIL

(IF APPLICABLE)

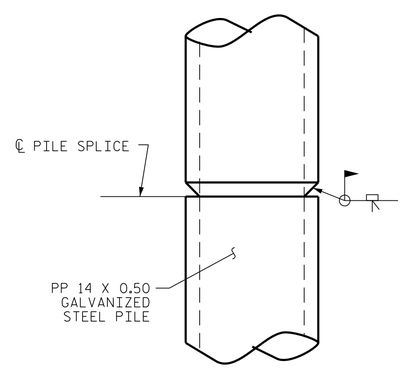

PIPE PILE SPLICE DETAIL

NOTES

PIPE PILES SHALL BE IN ACCORDANCE WITH SECTION 1084 OF THE STANDARD SPECIFICATIONS.

GALVANIZE STEEL PIPE PILES IN ACCORDANCE WITH SECTION 1076 OF THE STANDARD SPECIFICATIONS UNLESS METALLIZING IS REQUIRED. GALVANIZING OR METALLIZING PIPE PILE PLATES IS NOT REQUIRED.

PIPE PILE PLATES, IF REQUIRED, SHALL BE IN ACCORDANCE WITH SECTION 450 OF THE STANDARD SPECIFICATIONS.

REMOVE AND REPLACE OR REPAIR TO THE SATISFACTION OF THE ENGINEER PILES THAT ARE DAMAGED, DEFORMED OR COLLAPSED DURING INSTALLATION OR DRIVING.

PILE SPLICES SHALL BE IN ACCORDANCE WITH THE STANDARD SPECIFICATIONS AND AWS D1.1.

FOR CLOSED END PIPE PILES, REMOVE ALL SOIL AND WATER FROM INSIDE THE PILES JUST PRIOR TO PLACING REINFORCING STEEL AND CONCRETE FOR THE CONCRETE PLUG.

FOR OPEN END PIPE PILES, REMOVE ENOUGH SOIL AND WATER FROM INSIDE THE PILES TO CONSTRUCT THE CONCRETE PLUG WITHOUT FOULING THE CONCRETE.

FORM THE CONCRETE PLUG SUCH THAT THE REINFORCING STEEL OR CONCRETE DOES NOT MOVE AND THE CLEARANCE FROM THE REINFORCING STEEL TO THE INSIDE OF THE PILE IS MAINTAINED AFTER CONCRETE PLACEMENT. DO NOT PLACE CONCRETE IN THE BENT CAP UNTIL THE CONCRETE PLUG HAS ATTAINED A MINIMUM COMPRESSIVE STRENGTH OF 1500 PSI.

THE REINFORCING STEEL, CLASS A CONCRETE, AND GALVANIZING ARE CONSIDERED INCIDENTAL TO THE CONTRACT UNIT PRICE BID PER LINEAR FOOT FOR PP 14 X 0.50 GALVANIZED STEEL PILES.

BILL OF MATERIAL FOR ONE PP 14 X 0.50 GALVANIZED STEEL PILE

BAR	NO.	SIZE	TYPE	LENGTH	WEIGHT
S1	6	#4	1	3'-5"	14
V1	6	#5	2	6'-8"	42
REINFORCING STEEL =					56 LBS

CLASS A CONCRETE

5'-0" MINIMUM PLUG 0.2 CY

BAR TYPES

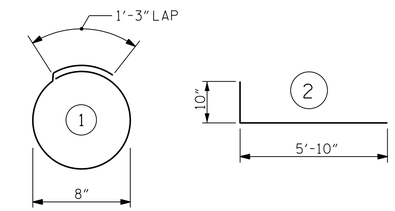

ALL BAR DIMENSIONS ARE OUT TO OUT.

PROJECT NO. 17BP.3.R.80
BRUNSWICK COUNTY
STATION: 20+18.00 -L-

STATE OF NORTH CAROLINA
DEPARTMENT OF TRANSPORTATION
RALEIGH

STANDARD
14" STEEL PIPE PILE

DOCUMENT NOT CONSIDERED FINAL UNLESS ALL SIGNATURES COMPLETED

CDM Smith
CDM SMITH
5400 Glenwood Avenue, Suite 400
Raleigh, NC 27612-3228
NC COA No. F-1255

DRAWN BY : JJR DATE : 04/21
CHECKED BY : THF DATE : 06/21
DESIGN ENGINEER : VDK DATE : 07/21

DWG. No.

NORTH CAROLINA PROFESSIONAL SEAL 16301 ENGINEER TING HSIUNG FANG
DocuSigned by: Ting H. Fang
1/5/2022 CAF9AA4B5...

REVISIONS						SHEET NO.
NO.	BY:	DATE:	NO.	BY:	DATE:	S-21
1			3			TOTAL SHEETS
2			4			26

DRAWN BY : TLA 8/05
CHECKED BY : GM 9/05

REV. 5/1/06R MAA/KMM
REV. 10/1/11 MAA/GM
REV. 12/17 MAA/THC

FILE: SPILES
DATE: STATES
STATES

STD. NO. SPP1

DocuSign Envelope ID: 2BDD4FF0-40BD-4345-9C22-912B7DC6BCB1

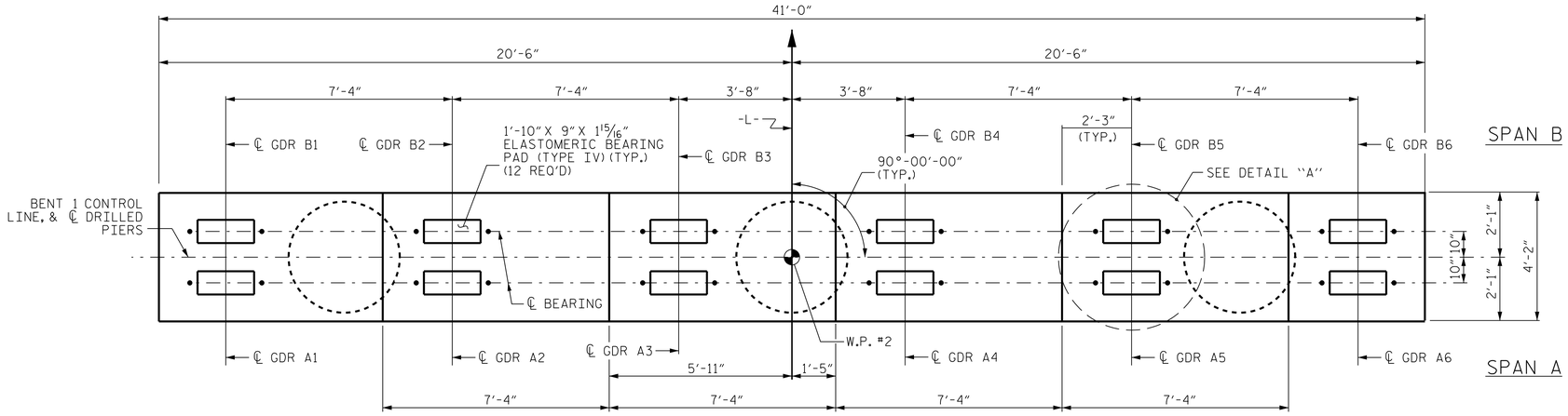

PLAN

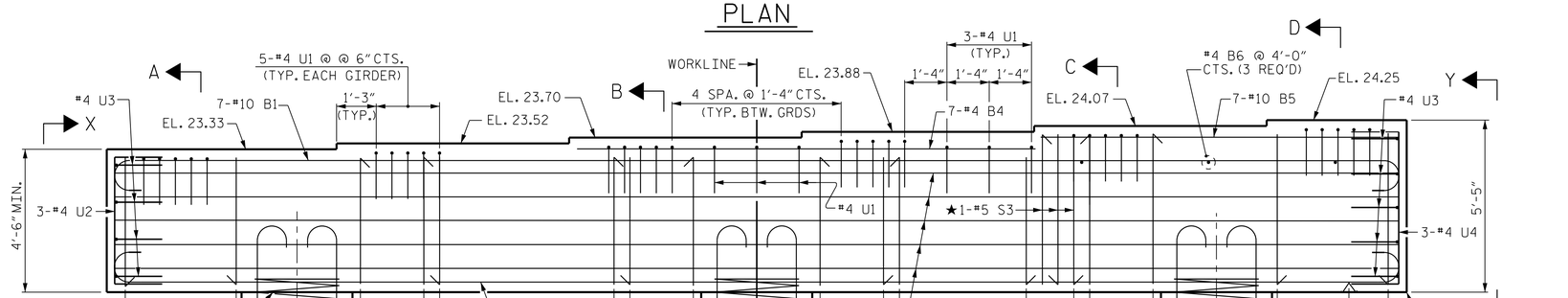

ELEVATION

DIMENSIONS & REINFORCING STEEL ARE TYPICAL FOR EACH DRILLED PIER

NOTES

STIRRUPS & U1 BARS IN CAP MAY BE SHIFTED AS NECESSARY TO CLEAR ANCHOR BOLTS.

HOOKS ON V1 BAR MAY BE TURNED AS NECESSARY FOR PLACING REINFORCING STEEL.

FOR DRILLED PIERS, SEE SECTION 411 OF THE STANDARD SPECIFICATIONS.

ALL STEEL IN THE DRILLED PIERS IS INCLUDED IN THE PAY ITEMS FOR "REINFORCING STEEL" AND "SPIRAL COLUMN REINFORCING STEEL."

★ INVERT ALTERNATE STIRRUPS.

THE CONTRACTOR'S ATTENTION IS CALLED TO THE FACT THAT THE LONGITUDINAL REINFORCEMENT FOR DRILLED PIERS IS DETAILED WITH 3 FEET OF EXTRA LENGTH.

FOR MECHANICAL BUTT SPLICES, SEE SECTION 425-5(B) OF THE STANDARD SPECIFICATIONS.

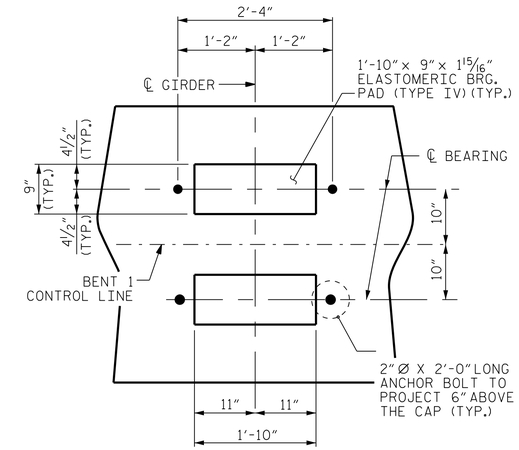

DETAIL A

(TYP. EA. GIRDER)

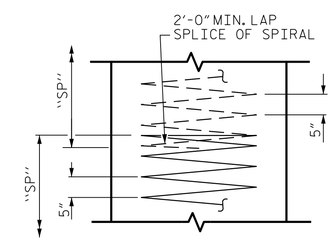

TYPICAL SPIRAL SPLICE DETAIL

PROJECT NO. 17BP.3.R.80

BRUNSWICK COUNTY

STATION: 20+18.00 -L-

SHEET 1 OF 2

STATE OF NORTH CAROLINA
DEPARTMENT OF TRANSPORTATION
RALEIGH

SUBSTRUCTURE

BENT 1

DOCUMENT NOT CONSIDERED FINAL UNLESS ALL SIGNATURES COMPLETED

CDM Smith
CDM SMITH
5400 Glenwood Avenue, Suite 400
Raleigh, NC 27612-3228
NC COA No. F-1255

DRAWN BY : JJR DATE : 04/21
CHECKED BY : THF DATE : 06/21
DESIGN ENGINEER : VDK DATE : 07/21

DWG. No.

NORTH CAROLINA PROFESSIONAL SEAL 16301 ENGINEER TING-HSIUNG FANG
DocuSigned by: Ting H. Fang
1/5/2022

REVISIONS						SHEET NO.
NO.	BY:	DATE:	NO.	BY:	DATE:	S-22
1			3			TOTAL SHEETS
2			4			26

FILE: SFILES STANDS
DATE: SDATES

DocuSign Envelope ID: 2BDD4FF0-40BD-4345-9C22-912B7DC6BCB1

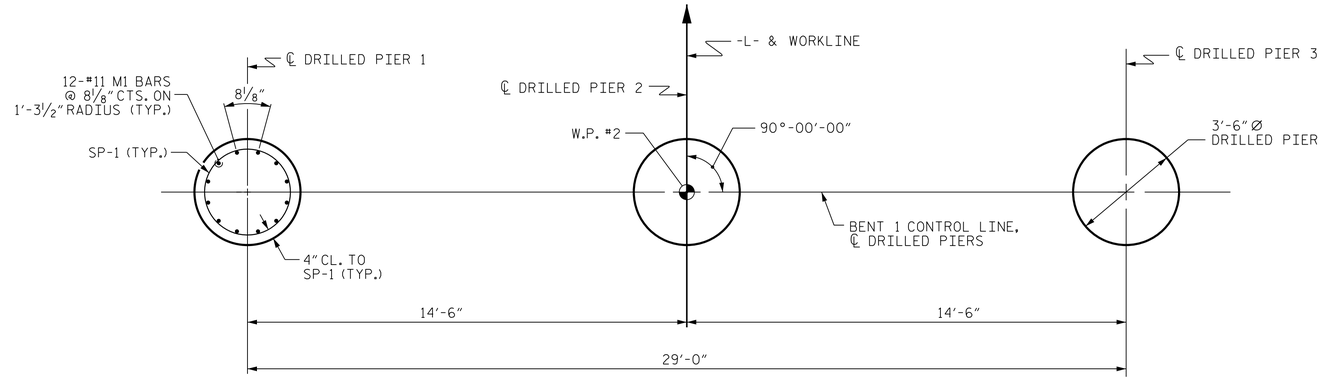

PLAN OF DRILLED PIERS

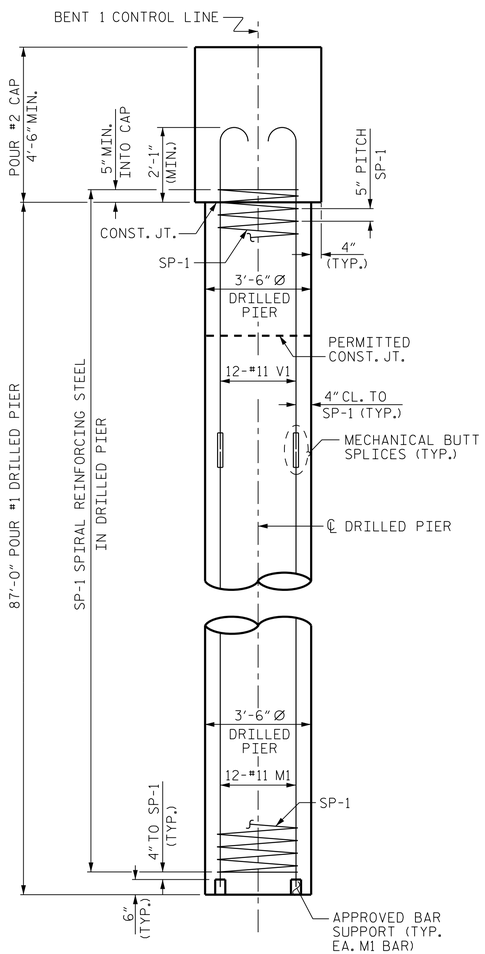

END ELEVATION

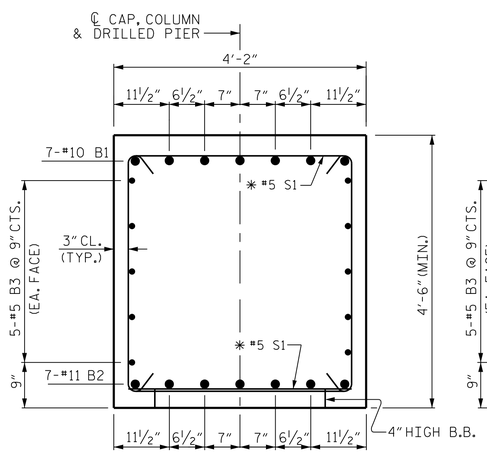

SECTION A-A

(SINGLE STIRRUP)
* INVERT ALTERNATE STIRRUPS

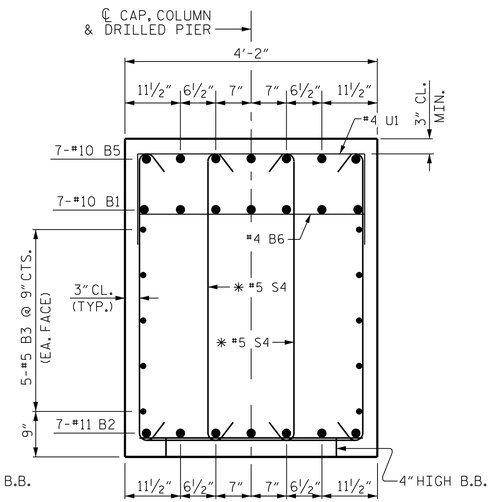

SECTION C-C

(DOUBLE STIRRUP)
* INVERT ALTERNATE STIRRUPS

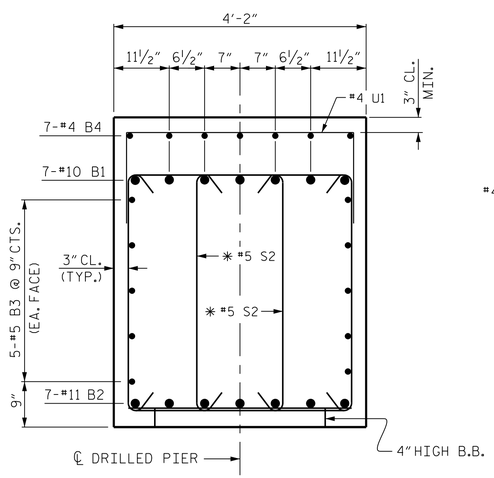

SECTION B-B

(DOUBLE STIRRUP)
* INVERT ALTERNATE STIRRUPS

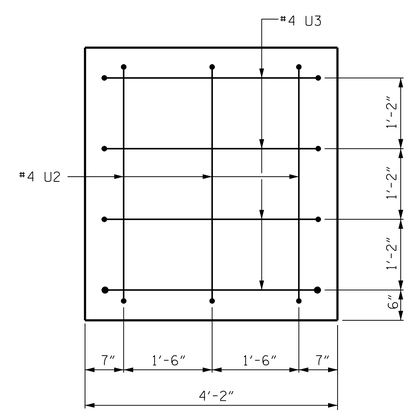

VIEW X-X

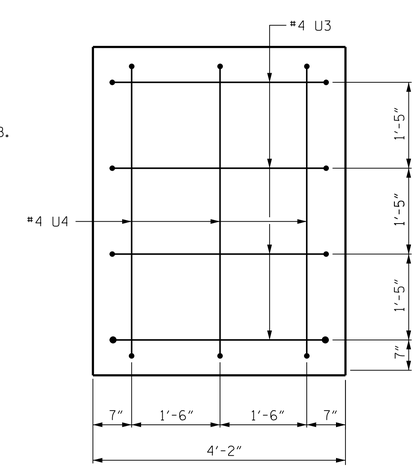

VIEW Y-Y

BAR TYPES

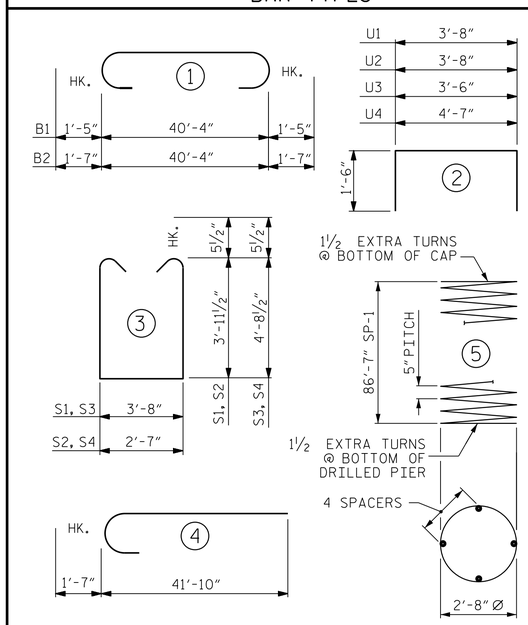

ALL BAR DIMENSIONS ARE OUT TO OUT.

BILL OF MATERIAL

BENT 1

BAR	NO.	SIZE	TYPE	LENGTH	WEIGHT
* B1	7	#10	1	43'-2"	1300
* B2	7	#11	1	43'-6"	1618
* B3	10	#5	STR	40'-6"	422
* B4	7	#4	STR	14'-2"	67
* B5	7	#10	STR	11'-3"	339
* B6	3	#4	STR	3'-8"	7
* M1	36	#11	STR	50'-0"	9563
* S1	29	#5	3	12'-6"	378
* S2	30	#5	3	11'-2"	357
* S3	11	#5	3	14'-0"	161
* S4	10	#5	3	12'-11"	135
* U1	36	#4	2	6'-8"	160
* U2	3	#4	2	6'-8"	13
* U3	8	#4	2	6'-6"	35
* U4	3	#4	2	7'-7"	15
* V1	36	#11	4	43'-5"	8304

EPOXY COATED REINFORCING STEEL 22,876 LBS.

* SP-1	3	*	5	1842'-3"	5,765

EPOXY COATED SPIRAL COLUMN REINFORCING STEEL 5,765 LBS.

* THE SP-1 EPOXY COATED SPIRAL REINFORCING STEEL SHALL BE W31 OR D-31 COLD DRAWN WIRE OR #5 PLAIN OR DEFORMED BAR

CLASS A CONCRETE BREAKDOWN

POUR #2 (CAP)	31.6 C.Y.
TOTAL CLASS A CONCRETE	31.6 C.Y.

DRILLED PIERS:

DRILLED PIER CONCRETE

POUR #1 (DRILLED PIERS)	93.0 C.Y.
3'-6" Ø DRILLED PIERS	261.0 LIN. FT.
CSL TUBES	1062.0 LIN. FT.

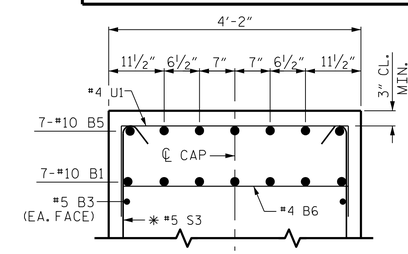

PARTIAL SECTION D-D

* INVERT ALTERNATE STIRRUPS

PROJECT NO. 17BP.3.R.80
BRUNSWICK COUNTY
STATION: 20+18.00 -L-

SHEET 2 OF 2

STATE OF NORTH CAROLINA
DEPARTMENT OF TRANSPORTATION
RALEIGH

SUBSTRUCTURE

BENT 1

DOCUMENT NOT CONSIDERED FINAL UNLESS ALL SIGNATURES COMPLETED

CDM Smith
CDM SMITH
5400 Glenwood Avenue, Suite 400
Raleigh, NC 27612-3228
NC COA No. F-1255

DRAWN BY :	JJR	DATE :	04/21
CHECKED BY :	THF	DATE :	06/21
DESIGN ENGINEER :	VDK	DATE :	07/21

DWG. No.

NORTH CAROLINA PROFESSIONAL SEAL 16301 ENGINEER TING HSIUNG FANG
DocuSigned by: Ting H. Fang
1/5/2022

REVISIONS							SHEET NO.
NO.	BY:	DATE:	NO.	BY:	DATE:		S-23
1			3				TOTAL SHEETS
2			4				26

FILE: $FILES
DATE: $DATE$ $TIME$

DocuSign Envelope ID: 2BDD4FF0-40BD-4345-9C22-912B7DC6BCB1

ESTIMATED QUANTITIES		
BRIDGE @ STA. 20+18.00 -L-	RIP RAP CLASS II	GEOTEXTILE FOR DRAINAGE
	TONS	SQUARE YARDS
END BENT 1	122	135
END BENT 2	131	145
TOTAL	253	280

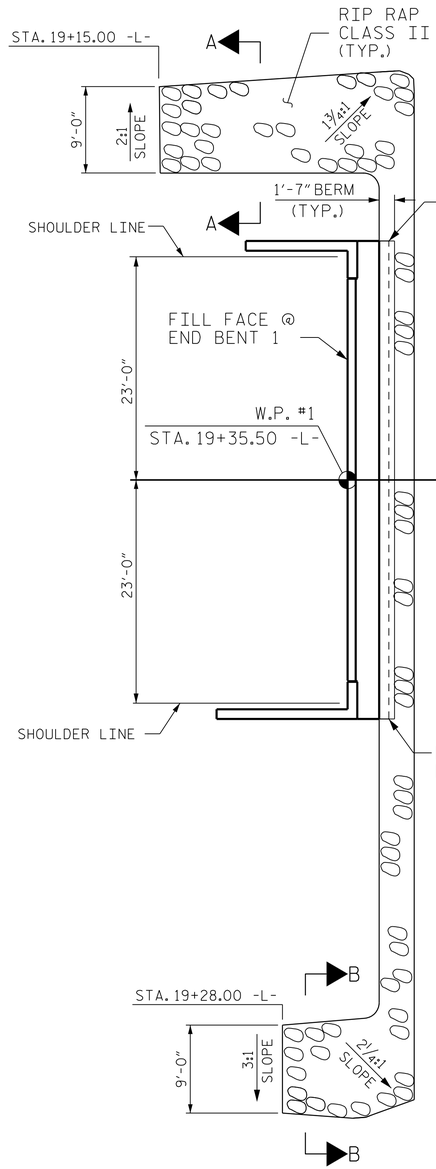

END BENT 1

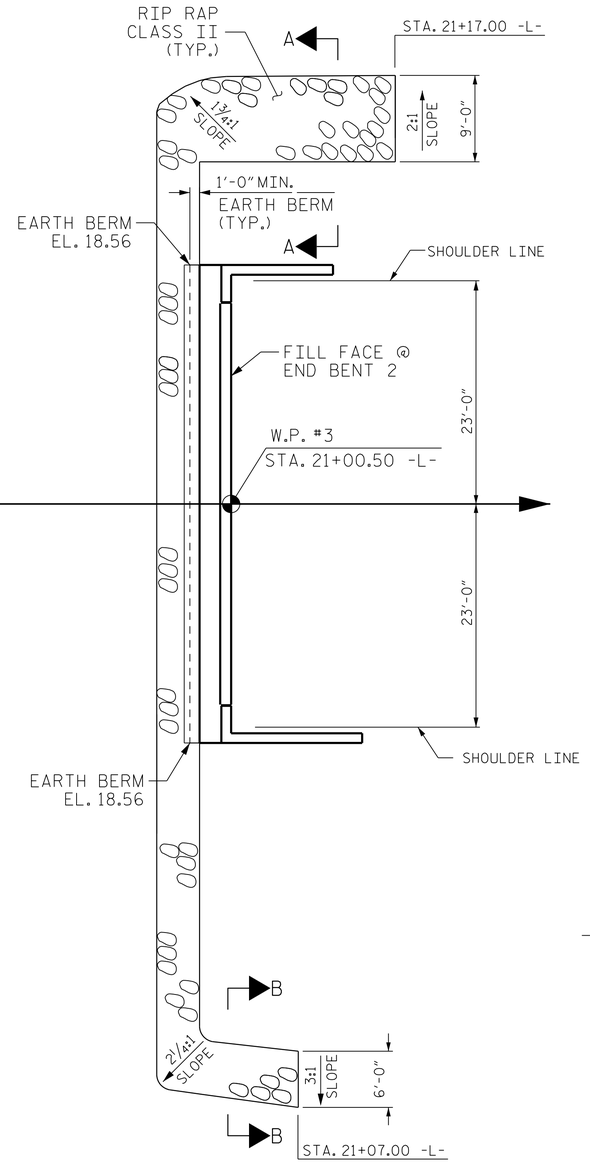

END BENT 2

PLAN PLAN

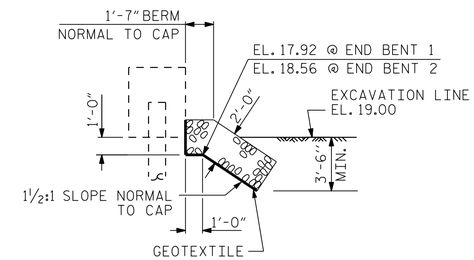

℄ SECTION

BERM RIP RAPPED

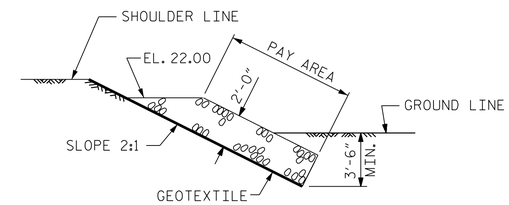

SECTION A-A

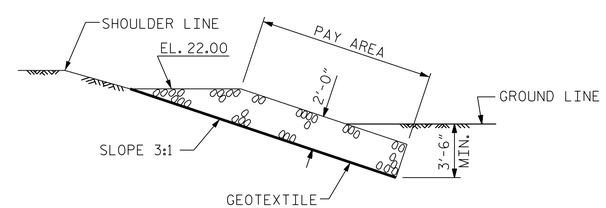

SECTION B-B

PROJECT NO. 17BP.3.R.80

BRUNSWICK COUNTY

STATION: 20+18.00 -L-

DOCUMENT NOT CONSIDERED FINAL UNLESS ALL SIGNATURES COMPLETED

CDM Smith

CDM SMITH
5400 Glenwood Avenue, Suite 400
Raleigh, NC 27612-3228
NC COA No. F-1255

DRAWN BY :	JJR	DATE :	04/21
CHECKED BY :	THF	DATE :	06/21
DESIGN ENGINEER :	VDK	DATE :	07/21

DWG. No.

NORTH CAROLINA PROFESSIONAL SEAL 16301 ENGINEER TING HSILING FANG

DocuSigned by: Ting H. Fang 1/5/2022

STATE OF NORTH CAROLINA
DEPARTMENT OF TRANSPORTATION
RALEIGH

STANDARD

RIP RAP DETAILS

REVISIONS							SHEET NO.
NO.	BY:	DATE:	NO.	BY:	DATE:		S-24
1			3				TOTAL SHEETS
2			4				26

FILE: STYLES
DATE: SDATES STYMES

DocuSign Envelope ID: B5A6AF10-2E54-4A1A-94C2-3590FEA51862

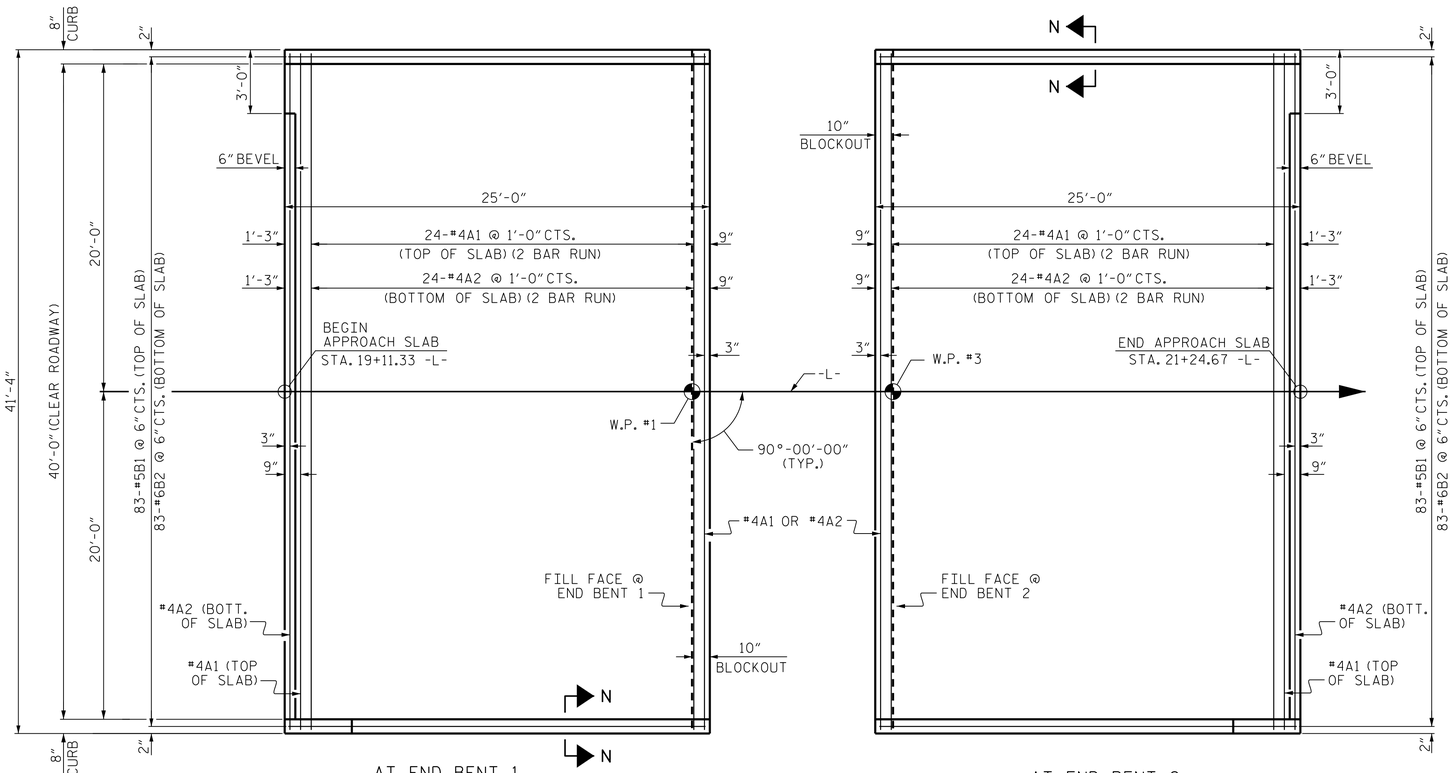

AT END BENT 1

AT END BENT 2

PLAN

DIMENSIONS SHOWN ARE TYPICAL FOR BOTH APPROACH SLABS EXCEPT AS OTHERWISE NOTED.

NOTES

APPROACH SLAB SHALL NOT BE CONSTRUCTED PRIOR TO COMPLETION OF THE BRIDGE DECK.

FOR BRIDGE APPROACH FILL INCLUDING GEOTEXTILE, 6" Ø DRAINAGE PIPE, AND SELECT MATERIAL, SEE ROADWAY PLANS.

GEOTEXTILE SHALL BE TYPE 1 IN ACCORDANCE WITH THE STANDARD SPECIFICATIONS SECTION 1056.

SELECT MATERIAL BACKFILL (CLASS V OR CLASS VI) SHALL BE IN ACCORDANCE WITH STANDARD SPECIFICATIONS SECTION 1016.

SELECT MATERIAL BACKFILL IS TO BE CONTINUOUS ALONG FILL FACE OF BACKWALL FROM OUTSIDE EDGE TO OUTSIDE EDGE OF APPROACH SLAB.

FOR THE 6" Ø DRAINAGE PIPE OUTLET(S), SEE ROADWAY STANDARD DRAWINGS.

AREA BETWEEN THE WINGWALL AND APPROACH SLAB SHALL BE GRADED TO DRAIN THE WATER AWAY FROM THE FILL FACE OF THE BRIDGE AND SHALL BE PAVED. SEE ROADWAY PLANS.

THE JOINT OPENING AT THE APPROACH SLAB/DECK INTERFACE SHALL BE SAWED NO MORE THAN 12 HOURS AFTER THE APPROACH SLAB IS CAST. THE JOINT SHALL BE CLEANED OF ALL DEBRIS BEFORE THE SEALANT IS APPLIED. THE JOINT SEALER MATERIAL SHALL CONFORM TO THE REQUIREMENTS OF SECTION 1028-3 OF THE STANDARD SPECIFICATIONS.

AT THE CONTRACTORS OPTION, "TYPE A - ALTERNATE APPROACH FILL" IN LIEU OF "TYPE I - STANDARD APPROACH FILL" MAY BE CONSTRUCTED AT NO ADDITIONAL COST TO THE DEPARTMENT. SEE SHEET 2 OF 2 FOR DETAILS AND NOTES.

FOR BRIDGE APPROACH FILLS TYPE 5 GEOTEXTILE, SEE SPECIAL PROVISIONS.

FOR TEMPORARY BERM AND SLOPE DRAIN DETAILS, SEE SHEET 2 OF 2.

BILL OF MATERIAL

FOR ONE APPROACH SLAB (2 REQUIRED)

BAR	NO.	SIZE	TYPE	LENGTH	WEIGHT
* A1	52	#4	STR	21'-6"	747
* A2	52	#4	STR	21'-6"	747
* B1	83	#5	STR	24'-2"	2092
* B2	83	#6	STR	24'-8"	3075
* EPOXY COATED REINFORCING STEEL				LBS.	6,661
CLASS AA CONCRETE				C. Y.	44.5

SPLICE LENGTHS

BAR SIZE	EPOXY COATED	UNCOATED
#4	1'-11"	1'-7"
#5	2'-5"	2'-0"
#6	3'-7"	2'-5"

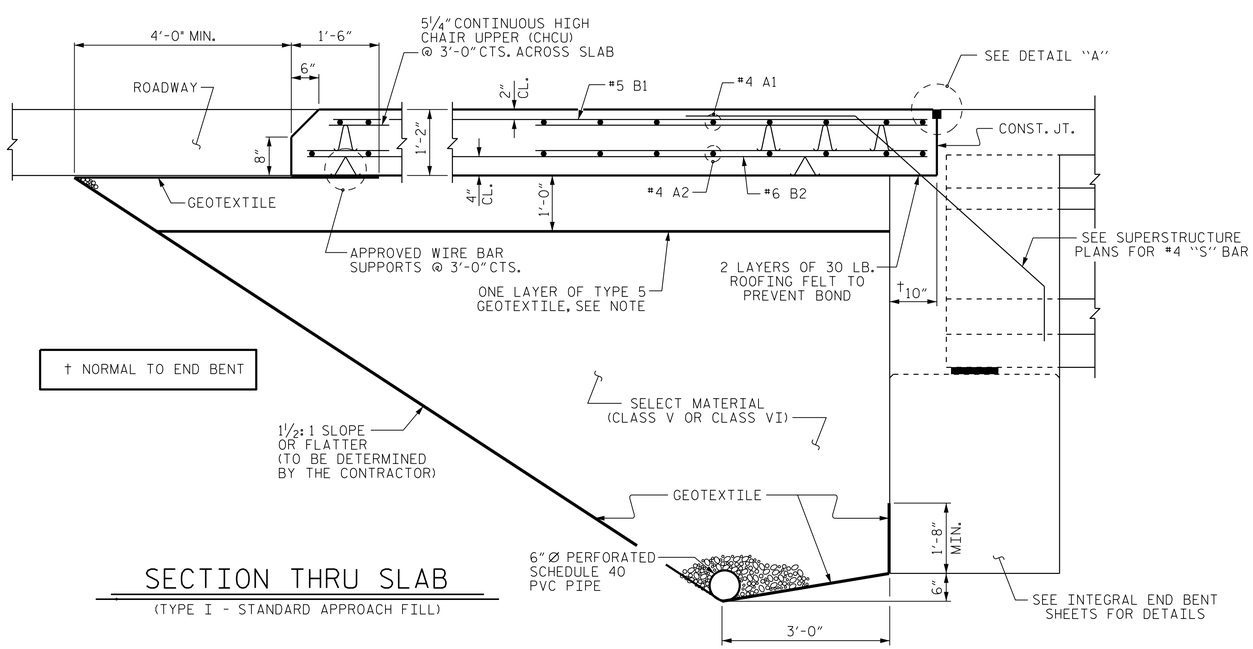

SECTION THRU SLAB

(TYPE I - STANDARD APPROACH FILL)

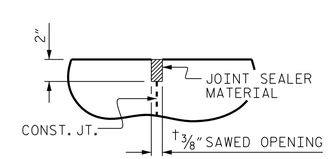

DETAIL "A"

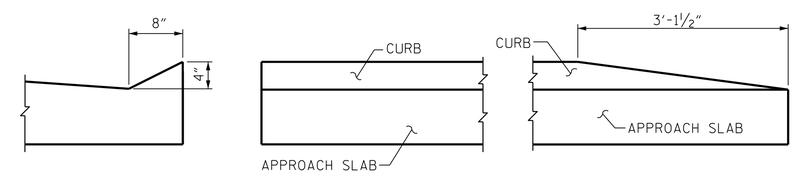

SECTION N-N

END OF CURB WITH SHOULDER BERM GUTTER
AT LEFT SIDE
(SEE ROADWAY PLANS)

END OF CURB WITHOUT SHOULDER BERM GUTTER
AT RIGHT SIDE
(SEE ROADWAY PLANS)

CURB DETAILS

PROJECT NO. 17BP.3.R.80
BRUNSWICK COUNTY
STATION: 20+18.00 -L-

SHEET 1 OF 2

STATE OF NORTH CAROLINA
DEPARTMENT OF TRANSPORTATION
RALEIGH

STANDARD

BRIDGE APPROACH SLAB FOR INTEGRAL ABUTMENT WITH FLEXIBLE PAVEMENT

90° SKEW

DOCUMENT NOT CONSIDERED FINAL UNLESS ALL SIGNATURES COMPLETED

CDM Smith
CDM SMITH
5400 Glenwood Avenue, Suite 400
Raleigh, NC 27612-3228
NC COA No. F-1255

DRAWN BY : JJR DATE : 04/21
CHECKED BY : THF DATE : 06/21
DESIGN ENGINEER : VDK DATE : 07/21

DWG. No.

NORTH CAROLINA PROFESSIONAL SEAL 16301 ENGINEER TING HSIUNG FANG
DOCUSIGNED BY: Ting Fang
60E43C0AEA60462...
4/20/2022

REVISIONS						SHEET NO.
NO.	BY:	DATE:	NO.	BY:	DATE:	S-25
1			3			TOTAL SHEETS
2			4			26

STD. NO. BAS5

FILE: $FILES
DATE: $DATES
STMES

DocuSign Envelope ID: B5A6AF10-2E54-4A1A-94C2-3590FEA51862

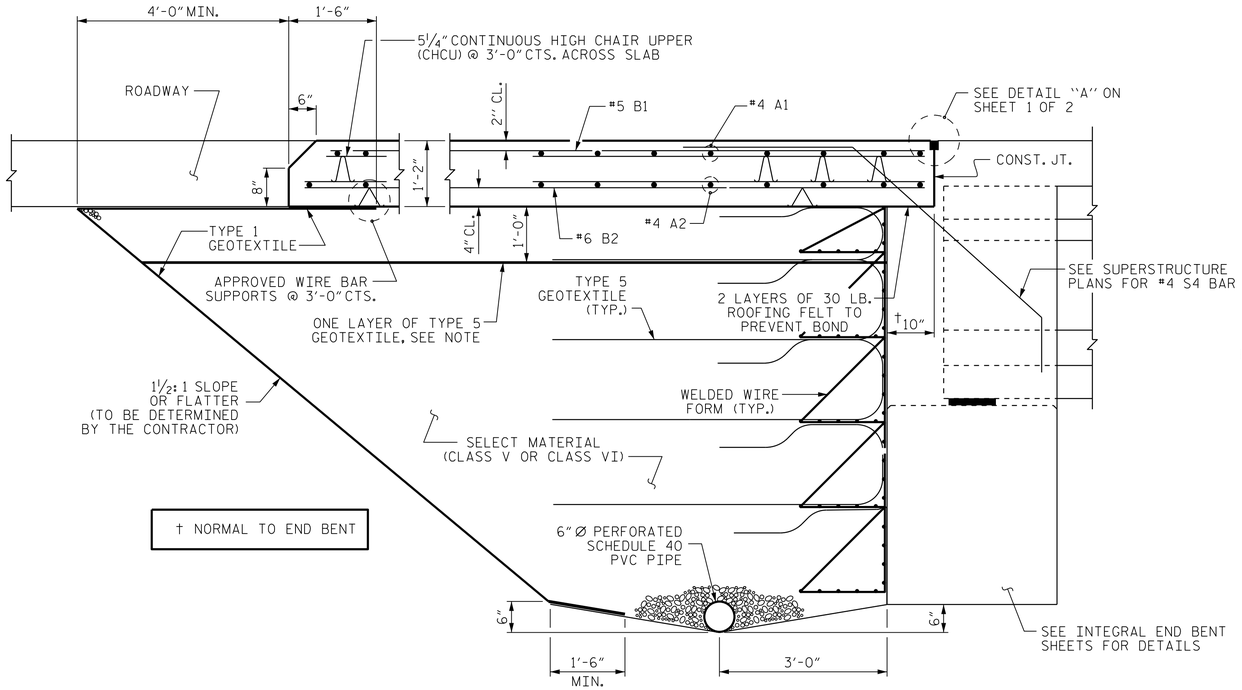

SECTION THRU SLAB

(TYPE A - ALTERNATE APPROACH FILL)

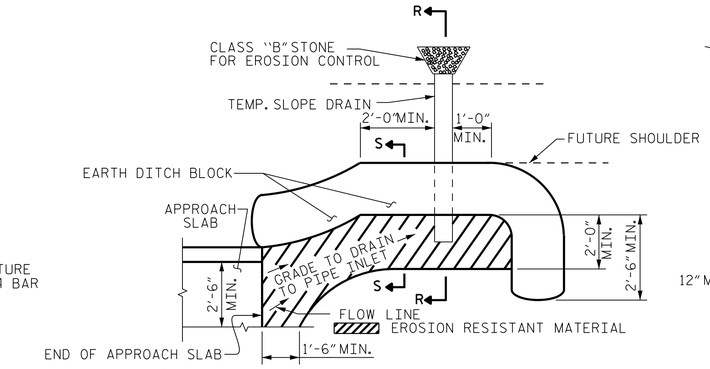

NOTE: IMMEDIATELY AFTER THE CONSTRUCTION OF THE APPROACH SLAB, THE CONTRACTOR SHALL PROVIDE TEMPORARY BERM AND SLOPE DRAIN. CONTRACTOR SHALL GRADE TO PIPE INLET AND PROVIDE EROSION RESISTANT MATERIAL AS SHOWN. THE EROSION RESISTANT MATERIAL SHALL BE EITHER 1) ASPHALT PLANT MIX, TYPE 1 OR TYPE 2, MIN. 2" DEPTH, 2) EROSION CONTROL MAT, OR 3) CONCRETE, AS DIRECTED BY THE ENGINEER. THE SLOPE DRAIN SHALL CONSIST OF A NON-PERFORATED TEMPORARY DRAINAGE PIPE, 12 INCHES IN DIAMETER.

PLAN VIEW

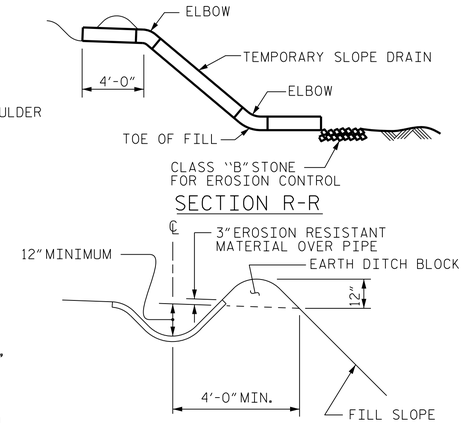

SECTION S-S

TEMPORARY BERM AND SLOPE DRAIN DETAILS

(TO BE USED WHEN SHOULDER BERM GUTTER IS REQUIRED)

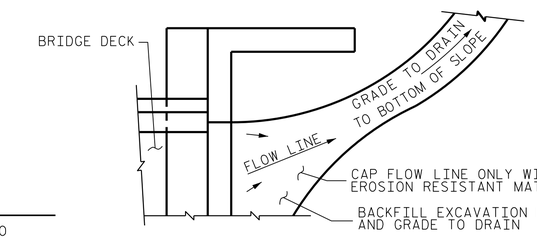

NOTE: IF THE APPROACH SLAB IS NOT CONSTRUCTED IMMEDIATELY AFTER THE BACKFILLING OF THE END BENT EXCAVATION, GRADE TO DRAIN TO THE BOTTOM OF THE SLOPE AND PROVIDE EROSION RESISTANT MATERIAL, SUCH AS FIBERGLASS ROVING OR AS DIRECTED BY THE ENGINEER TO PREVENT SOIL EROSION AND TO PROTECT THE AREA ADJACENT TO THE STRUCTURE. THE CONTRACTOR WILL BE REQUIRED TO REMOVE THESE MATERIALS PRIOR TO CONSTRUCTION OF THE APPROACH SLAB.

TEMPORARY DRAINAGE DETAIL

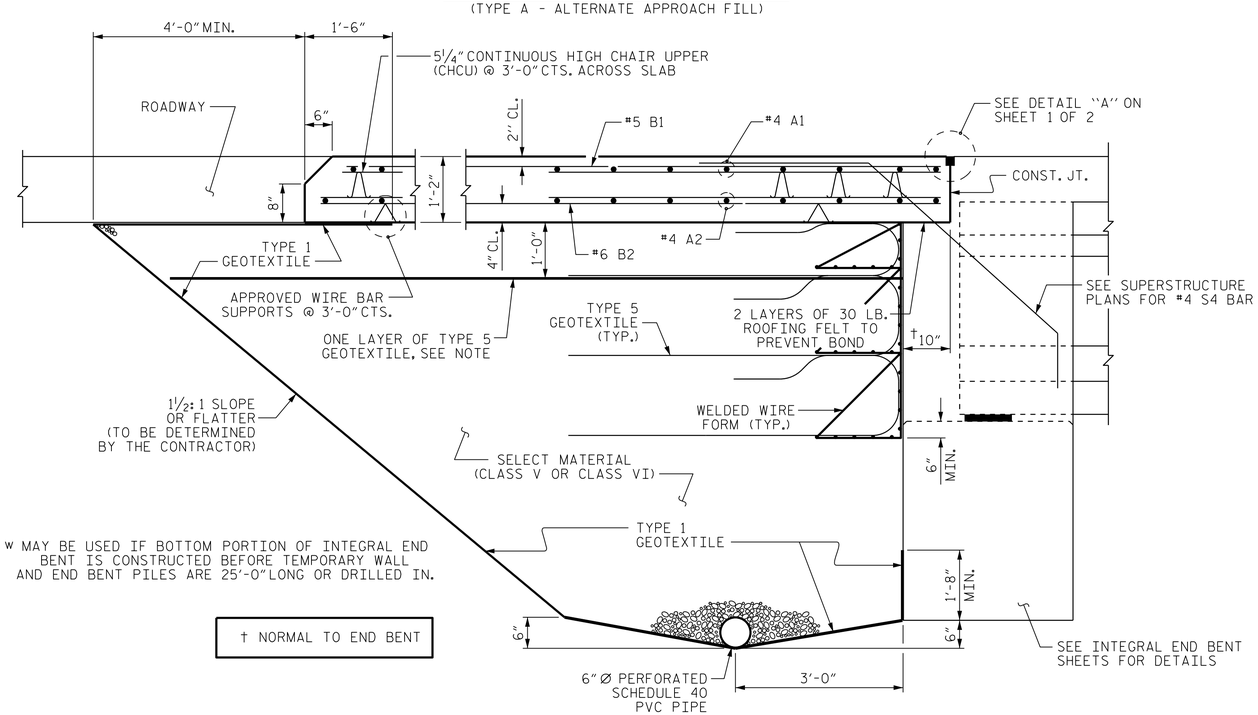

w MAY BE USED IF BOTTOM PORTION OF INTEGRAL END BENT IS CONSTRUCTED BEFORE TEMPORARY WALL AND END BENT PILES ARE 25'-0" LONG OR DRILLED IN.

† NORMAL TO END BENT

SECTION THRU SLAB

☆(TYPE A - ALTERNATE APPROACH FILL)

NOTES

APPROACH SLAB SHALL NOT BE CONSTRUCTED PRIOR TO COMPLETION OF THE BRIDGE DECK.

FOR TEMPORARY GEOTEXTILE WALL INCLUDING GEOTEXTILE, 6" Ø DRAINAGE PIPE, WELDED WIRE FORM, AND SELECT MATERIAL, SEE ROADWAY PLANS.

GEOTEXTILE (TYPE 1 OR TYPE 5) SHALL BE IN ACCORDANCE WITH THE STANDARD SPECIFICATIONS SECTION 1056.

SELECT MATERIAL BACKFILL (CLASS V OR CLASS VI) SHALL BE IN ACCORDANCE WITH STANDARD SPECIFICATIONS SECTION 1016.

SELECT MATERIAL BACKFILL IS TO BE CONTINUOUS ALONG FILL FACE OF BACKWALL FROM OUTSIDE EDGE TO OUTSIDE EDGE OF APPROACH SLAB.

FOR THE 6" Ø DRAINAGE PIPE OUTLET(S), SEE ROADWAY STANDARD DRAWINGS.

AREA BETWEEN THE WINGWALL AND APPROACH SLAB SHALL BE GRADED TO DRAIN THE WATER AWAY FROM THE FILL FACE OF THE BRIDGE AND SHALL BE PAVED. SEE ROADWAY PLANS.

THE JOINT OPENING AT THE APPROACH SLAB/DECK INTERFACE SHALL BE SAWED NO MORE THAN 12 HOURS AFTER THE APPROACH SLAB IS CAST. THE JOINT SHALL BE CLEANED OF ALL DEBRIS BEFORE THE SEALANT IS APPLIED. THE JOINT SEALER MATERIAL SHALL CONFORM TO THE REQUIREMENTS OF SECTION 1028-3 OF THE STANDARD SPECIFICATIONS.

FOR BRIDGE APPROACH FILLS TYPE 5 GEOTEXTILE, SEE SPECIAL PROVISIONS.

PROJECT NO. 17BP.3.R.80
BRUNSWICK COUNTY
STATION: 20+18.00 -L-

SHEET 2 OF 2

DOCUMENT NOT CONSIDERED FINAL UNLESS ALL SIGNATURES COMPLETED

CDM Smith
CDM SMITH
5400 Glenwood Avenue, Suite 400
Raleigh, NC 27612-3228
NC COA No. F-1255

DRAWN BY : JJR DATE : 04/21
CHECKED BY : THF DATE : 06/21
DESIGN ENGINEER : VDK DATE : 07/21

DWG. No.

NORTH CAROLINA PROFESSIONAL SEAL 16301 ENGINEER TING HSIUNG FANG
Ting Fang
60E43C9AEA0482...
4/20/2022

STATE OF NORTH CAROLINA
DEPARTMENT OF TRANSPORTATION
RALEIGH
STANDARD

BRIDGE APPROACH SLAB DETAILS

FOR TYPE A ALTERNATE APPROACH FILL

REVISIONS						SHEET NO.
NO.	BY:	DATE:	NO.	BY:	DATE:	S-26
1			3			TOTAL SHEETS
2			4			26

FILE: SPILES STIMES
DATE: SDATES

STD. NO. BAS5

STANDARD NOTES

DESIGN DATA:

SPECIFICATIONS	A.A.S.H.T.O. (CURRENT)
LIVE LOAD	SEE PLANS
IMPACT ALLOWANCE	SEE A.A.S.H.T.O.
STRESS IN EXTREME FIBER OF	
STRUCTURAL STEEL - AASHTO M270 GRADE 36	20,000 LBS. PER SQ. IN.
- AASHTO M270 GRADE 50W	27,000 LBS. PER SQ. IN.
- AASHTO M270 GRADE 50	27,000 LBS. PER SQ. IN.
REINFORCING STEEL IN TENSION	
GRADE 60	24,000 LBS. PER SQ. IN.
CONCRETE IN COMPRESSION	1,200 LBS. PER SQ. IN.
CONCRETE IN SHEAR	SEE A.A.S.H.T.O.
STRUCTURAL TIMBER - TREATED OR	
UNTREATED - EXTREME FIBER STRESS	1,800 LBS. PER SQ. IN.
COMPRESSION PERPENDICULAR TO GRAIN OF TIMBER	375 LBS. PER SQ. IN.
EQUIVALENT FLUID PRESSURE OF EARTH	30 LBS. PER CU. FT. (MINIMUM)

MATERIAL AND WORKMANSHIP:

EXCEPT AS MAY OTHERWISE BE SPECIFIED ON PLANS OR IN THE SPECIAL PROVISIONS, ALL MATERIAL AND WORKMANSHIP SHALL BE IN ACCORDANCE WITH THE 2018 "STANDARD SPECIFICATIONS FOR ROADS AND STRUCTURES" OF THE N. C. DEPARTMENT OF TRANSPORTATION.

STEEL SHEET PILING FOR PERMANENT OR TEMPORARY APPLICATIONS SHALL BE HOT ROLLED.

CONCRETE:

UNLESS OTHERWISE REQUIRED ON PLANS, CLASS A CONCRETE SHALL BE USED FOR ALL PORTIONS OF ALL STRUCTURES WITH THE EXCEPTION THAT: CLASS AA CONCRETE SHALL BE USED IN BRIDGE SUPERSTRUCTURES, ABUTMENT BACKWALLS, AND APPROACH SLABS; AND CLASS B CONCRETE SHALL BE USED FOR SLOPE PROTECTION AND RIP RAP.

CONCRETE CHAMFERS:

UNLESS OTHERWISE NOTED ON THE PLANS, ALL EXPOSED CORNERS ON STRUCTURES SHALL BE CHAMFERED 3/4" WITH THE FOLLOWING EXCEPTIONS: TOP CORNERS OF CURBS MAY BE ROUNDED TO 1-1/2" RADIUS WHICH IS BUILT INTO CURB FORMS; CORNERS OF TRANSVERSE FLOOR EXPANSION JOINTS SHALL BE ROUNDED WITH A 1/4" FINISHING TOOL UNLESS OTHERWISE REQUIRED ON PLANS; AND CORNERS OF EXPANSION JOINTS IN THE ROADWAY FACES AND TOPS OF CURBS AND SIDEWALKS SHALL BE ROUNDED TO A 1/4" RADIUS WITH A FINISHING STONE OR TOOL UNLESS OTHERWISE REQUIRED ON PLANS.

DOWELS:

DOWELS WHEN INDICATED ON PLANS AS FOR CULVERT EXTENSIONS, SHALL BE EMBEDDED AT LEAST 12" INTO THE OLD CONCRETE AND GROUTED INTO PLACE WITH 1:2 CEMENT MORTAR.

ALLOWANCE FOR DEAD LOAD DEFLECTION, SETTLEMENT, ETC. IN CASTING SUPERSTRUCTURES:

BRIDGES SHALL BE BUILT ON THE GRADE OR VERTICAL CURVE SHOWN ON PLANS. SLABS, CURBS AND PARAPETS SHALL CONFORM TO THE GRADE OR CURVE.

ALL DIMENSIONS WHICH ARE GIVEN IN SECTION AND ARE AFFECTED BY DEAD LOAD DEFLECTIONS ARE DIMENSIONS AT CENTER LINE OF BEARING UNLESS OTHERWISE NOTED ON PLANS. IN SETTING FORMS FOR STEEL BEAM BRIDGES AND PRESTRESSED CONCRETE GIRDER BRIDGES, ADJUSTMENTS SHALL BE MADE DUE TO THE DEAD LOAD DEFLECTIONS FOR THE ELEVATIONS SHOWN. WHERE BLOCKS ARE SHOWN OVER BEAMS FOR BUILDING UP TO THE SLAB, THE VERTICAL DIMENSIONS OF THE BLOCKS SHALL BE ADJUSTED BETWEEN BEARINGS TO COMPENSATE FOR DEAD LOAD DEFLECTIONS, VERTICAL CURVE ORDINATE, AND ACTUAL BEAM CAMBER. WHERE BOTTOM OF SLAB IS IN LINE WITH BOTTOM OF TOP FLANGES, DEPTH OF SLAB BETWEEN BEARINGS SHALL BE ADJUSTED TO COMPENSATE FOR DEAD LOAD DEFLECTION, VERTICAL CURVE ORDINATE, AND ACTUAL BEAM CAMBER.

IN SETTING FALSEWORK AND FORMS FOR REINFORCED CONCRETE SPANS, AN ALLOWANCE SHALL BE MADE FOR DEAD LOAD DEFLECTIONS, SETTLEMENT OF FALSEWORK, AND PERMANENT CAMBER WHICH SHALL BE PROVIDED FOR IN ADDITION TO THE ELEVATIONS SHOWN. AFTER REMOVAL OF THE FALSEWORK, THE FINISHED STRUCTURES SHALL CONFORM TO THE PROFILE AND ELEVATIONS SHOWN ON THE PLANS AND CONSTRUCTION ELEVATIONS FURNISHED BY THE ENGINEER.

DETAILED DRAWINGS FOR FALSEWORK OR FORMS FOR BRIDGE SUPERSTRUCTURE AND ANY STRUCTURE OR PARTS OF A STRUCTURE AS NOTED ON THE PLANS SHALL BE SUBMITTED TO THE ENGINEER FOR APPROVAL BEFORE CONSTRUCTION OF THE FALSEWORK OR FORMS IS STARTED.

REINFORCING STEEL:

ALL REINFORCING STEEL SHALL BE DEFORMED. DIMENSIONS RELATIVE TO PLACEMENT OF REINFORCING ARE TO CENTERS OF BARS UNLESS OTHERWISE INDICATED IN THE PLANS. DIMENSIONS ON BAR DETAILS ARE TO CENTERS OF BARS OR ARE OUT TO OUT AS INDICATED ON PLANS.

WIRE BAR SUPPORTS SHALL BE PROVIDED FOR REINFORCING STEEL WHERE INDICATED ON THE PLANS. WHEN BAR SUPPORT PIECES ARE PLACED IN CONTINUOUS LINES, THEY SHALL BE SO PLACED THAT THE ENDS OF THE SUPPORTING WIRES SHALL BE LAPPED TO LOCK LEGS ON ADJOINING PIECES.

STRUCTURAL STEEL:

AT THE CONTRACTOR'S OPTION, HE MAY SUBSTITUTE 7/8" Ø SHEAR STUDS FOR THE 3/4" Ø STUDS SPECIFIED ON THE PLANS. THIS SUBSTITUTION SHALL BE MADE AT THE RATE OF 3 - 7/8" Ø STUDS FOR 4 - 3/4" Ø STUDS, AND STUD SPACING CHANGES SHALL BE MADE AS NECESSARY TO PROVIDE THE SAME EQUIVALENT NUMBER OF 7/8" Ø STUDS ALONG THE BEAM AS SHOWN FOR 3/4" Ø STUDS BASED ON THE RATIO OF 3 - 7/8" Ø STUDS FOR 4 - 3/4" Ø STUDS. STUDS OF THE LENGTH SPECIFIED ON THE PLANS MUST BE PROVIDED. THE MAXIMUM SPACING SHALL BE 2'-0".

EXCEPT AT THE INTERIOR SUPPORTS OF CONTINUOUS BEAMS WHERE THE COVER PLATE IS IN CONTACT WITH BEARING PLATE, THE CONTRACTOR MAY, AT HIS OPTION, SUBSTITUTE FOR THE COVER PLATES DESIGNATED ON THE PLANS COVER PLATES OF THE EQUIVALENT AREA PROVIDED THESE PLATES ARE AT LEAST 5/16" IN THICKNESS AND DO NOT EXCEED A WIDTH EQUAL TO THE FLANGE WIDTH LESS 2" OR A THICKNESS EQUAL TO 2 TIMES THE FLANGE THICKNESS. THE SIZE OF FILLET WELDS SHALL CONFORM TO THE REQUIREMENTS OF THE CURRENT ANSI/AASHTO/AWS "BRIDGE WELDING CODE". ELECTROSLAG WELDING WILL NOT BE PERMITTED.

WITH THE SOLE EXCEPTION OF EDGES AT SURFACES WHICH BEAR ON OTHER SURFACES, ALL SHARP EDGES AND ENDS OF SHAPES AND PLATES SHALL BE SLIGHTLY ROUNDED BY SUITABLE MEANS TO A RADIUS OF APPROXIMATELY 1/16 INCH OR EQUIVALENT FLAT SURFACE AT A SUITABLE ANGLE PRIOR TO PAINTING, GALVANIZING, OR METALLIZING.

HANDRAILS AND POSTS:

METAL STANDARDS AND FACES OF THE CONCRETE END POSTS FOR THE METAL RAIL SHALL BE SET NORMAL TO THE GRADE OF THE CURB, UNLESS OTHERWISE SHOWN ON PLANS. THE METAL RAIL AND TOPS OF CONCRETE POSTS USED WITH THE ALUMINUM RAIL SHALL BE BUILT PARALLEL TO THE GRADE OF THE CURB.

METAL HANDRAILS SHALL BE IN ACCORDANCE WITH THE PLANS. RAILS SHALL BE AS MANUFACTURED FOR BRIDGE RAILING. CASTINGS SHALL BE OF A UNIFORM APPEARANCE. FINS AND OTHER DEFORMATIONS RESULTING FROM CASTING OR OTHERWISE SHALL BE REMOVED IN A MANNER SO THAT A UNIFORM COLORING OF THE COMPLETED CASTING SHALL BE OBTAINED. CASTINGS WITH DISCOLORATIONS OR OF NON-UNIFORM COLORING WILL NOT BE ACCEPTED. CERTIFIED MILL REPORTS ARE REQUIRED FOR METAL RAILS AND POSTS.

SPECIAL NOTES:

GENERALLY, IN CASE OF DISCREPANCY, THIS STANDARD SHEET OF NOTES SHALL GOVERN OVER THE SPECIFICATIONS, BUT THE REMAINDER OF THE PLANS SHALL GOVERN OVER NOTES HEREON, AND SPECIAL PROVISIONS SHALL GOVERN OVER ALL. SEE SPECIFICATIONS ARTICLE 105-4.

ENGLISH

JANUARY, 1990