PROJECT REFERENCE NO.	SHEET NO.
SS-4903BR	2A-3

R/W SHEET NO.

ROADWAY DESIGN ENGINEER

NORTH CAROLINA PROFESSIONAL SEAL 14493 ENGINEER JAMES STAFFORD GOODNIGHT, JR.

James S. Goodnight, Jr.

Digitally signed by James S. Goodnight, Jr. Date: 2017.06.09 10:33:30 -04'00'

PAVEMENT DESIGN ENGINEER

DOCUMENT NOT CONSIDERED FINAL UNLESS ALL SIGNATURES COMPLETED

A1	10″ CONCRETE TRUCK APRON
A2	6″ CONCRETE
C1	1.5″ S9.5B
C2	3″ S9.5B
C3	VAR. DEPTH S9.5B
D1	4″ I19.0B
E1	4″ B25.0B
E2	VAR. DEPTH B25.0B
R1	2′-6″ CURB AND GUTTER
R3	2′-9″ CURB AND GUTTER
R4	9″X18″ CONCRETE CURB
R5	1′-6″ CURB AND GUTTER
R6	8″X12″ CONCRETE CURB
S	4″ CONCRETE SIDEWALK
T	EARTH MATERIAL
U	EXISTING PAVEMENT
W	WEDGING (SEE DETAIL AT RT)

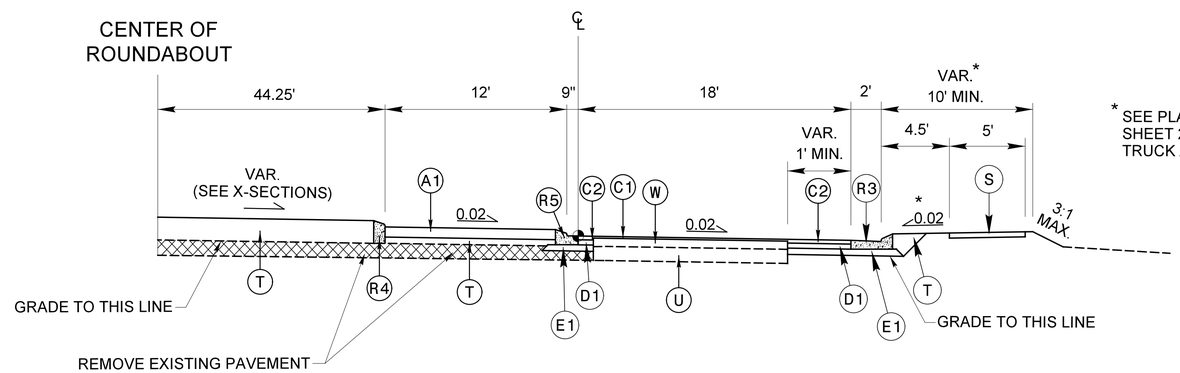

* SEE PLANS AND 10" CONCRETE TRUCK APRON DETAIL "A" ON SHEET 2A-1 FOR LIMITS AND DESIGN OF OUTSIDE 10" CONCRETE TRUCK APRON

TYPICAL SECTION NO. 5

-RAB- STA. 10+00.00 TO 13+58.14

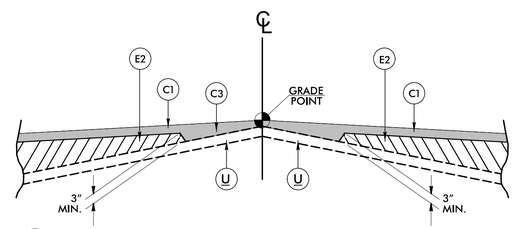

(W) - DETAIL SHOWING METHOD OF WEDGING

PARKING LOT CURB DETAIL "C1"

APPLY WHEN EXISTING PARKING LOT IS CONCRETE

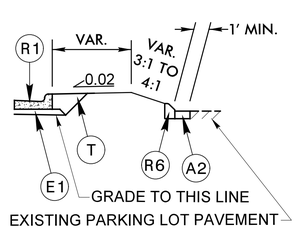

PARKING LOT CURB DETAIL "C2"

APPLY WHEN EXISTING PARKING LOT IS ASPHALT

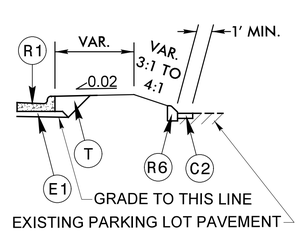

MILLING AT PAVEMENT TIE–INS

NOTES TO CONTRACTOR

For surface mixes over 1″ in thickness, mill the existing pavement in accordance with the following sketch as directed by the Engineer.

Locations shall include ties into existing concrete pavement, at bridge approaches where the bridge will not be resurfaced, and at the beginning and ending point of each resurfacing map.

Perform the work in accordance with Section 607 of the January 2012 North Carolina Department of Transportation Standard Specifications for Roads and Structures. Resurfacing will be accomplished at the same time as the milling operation.

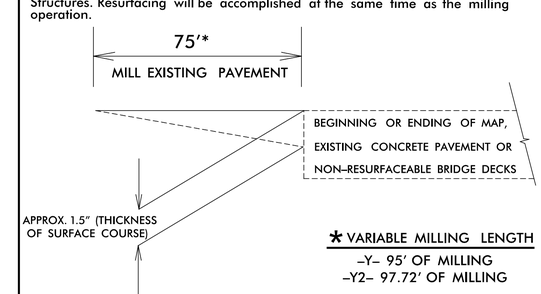

* VARIABLE MILLING LENGTH

–Y– 95′ OF MILLING

–Y2– 97.72′ OF MILLING