PROJECT REFERENCE NO.	SHEET NO.
SS-4903BR	2A-2

R/W SHEET NO.

ROADWAY DESIGN ENGINEER

NORTH CAROLINA PROFESSIONAL SEAL 14493 ENGINEER JAMES STAFFORD GOODNIGHT, JR.

James S. Goodnight, Jr. Digitally signed by James S. Goodnight, Jr. Date: 2017.05.03 08:07:18 -04'00'

PAVEMENT DESIGN ENGINEER

DOCUMENT NOT CONSIDERED FINAL UNLESS ALL SIGNATURES COMPLETED

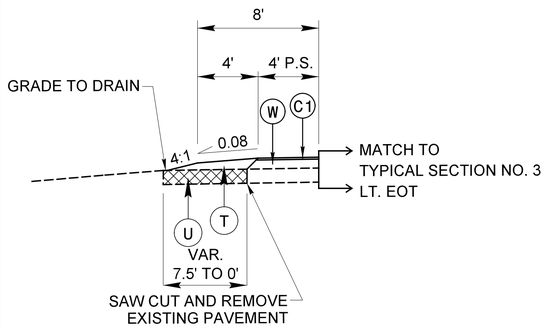

SHOULDER GRADING DETAIL "B1"

APPLY SHOULDER GRADING DETAIL "B1" TO TYPICAL SECTION NO. 3 FROM -Y- STA. 11+10.00 TO 12+00.00 (LT)

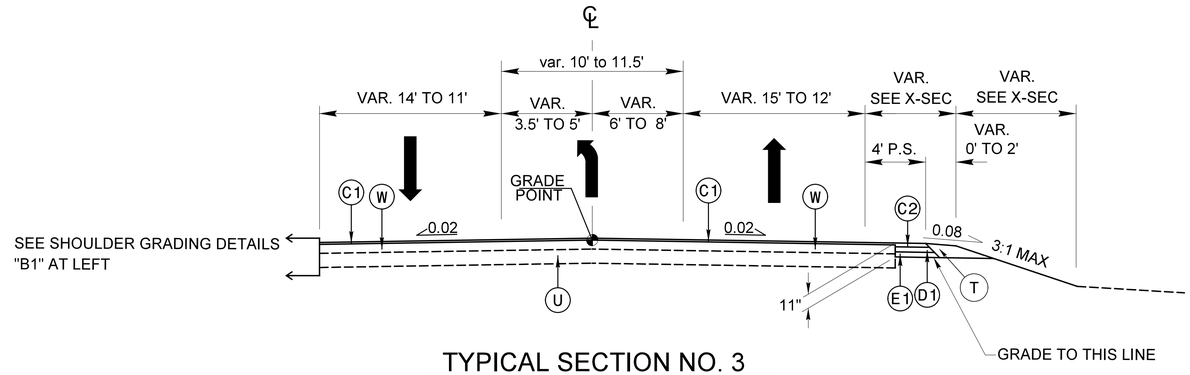

TYPICAL SECTION NO. 3

-Y- STA. 11+10.00 TO 12+00.00*

*FROM -Y- STA. 11+05.00 TO 12+00.00: SEE "MILLING AT PAVEMENT TIE-INS" DETAIL, SHEET 2A-3

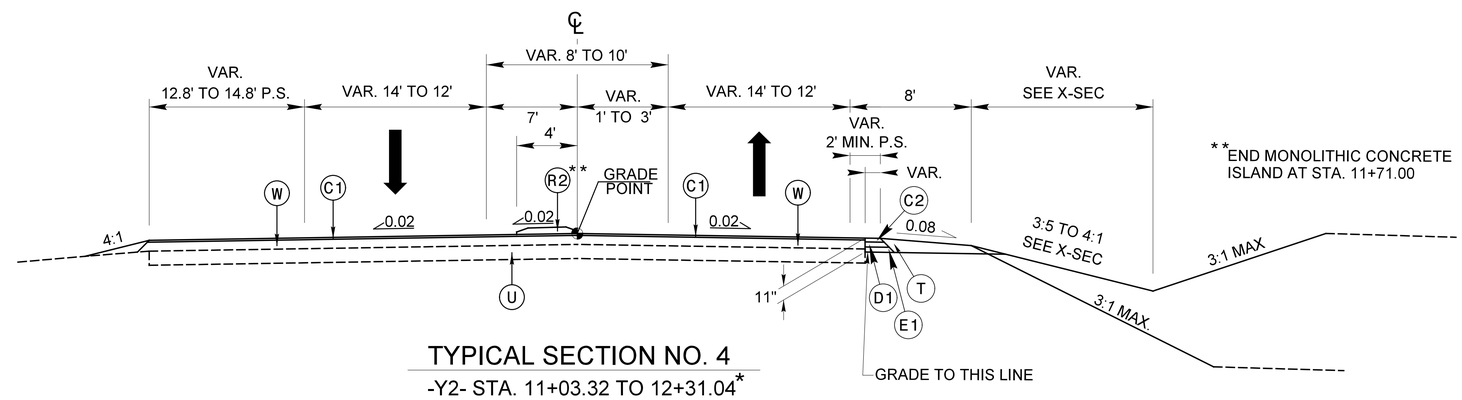

**END MONOLITHIC CONCRETE ISLAND AT STA. 11+71.00

TYPICAL SECTION NO. 4

-Y2- STA. 11+03.32 TO 12+31.04*

*FROM -Y2- STA. 11+33.32 TO 12+31.04: SEE "MILLING AT PAVEMENT TIE-INS" DETAIL, SHEET 2A-3

C1	1.5″ S9.5B
C2	3″ S9.5B
D1	4″ I19.0B
E1	4″ B25.0B
R2	5″ MONOLITHIC CONC. ISLAND
T	EARTH MATERIAL
U	EXISTING PAVEMENT
W	WEDGING (SEE DETAIL, SHT 2A-3)