| PROJECT REFERENCE NO. | SHEET NO. |
|---|---|
| U-5719 | UC-3 |

DESIGNED BY: EMT
DRAWN BY: ZT
CHECKED BY: EMT
APPROVED BY:
REVISED:

NORTH CAROLINA DEPARTMENT OF TRANSPORTATION
UTILITIES ENGINEERING SEC.
PHONE:(919)707-6690
FAX:(919)250-4151

NORTH CAROLINA PROFESSIONAL SEAL 028912 ENGINEER ERIC M. TWEED
DocuSigned by: Eric Tweed 30DC82B1819D415... 3/29/2017

UTILITY CONSTRUCTION PLANS ONLY

# PROJECT TYPICAL DETAILS

## UTILITY CONSTRUCTION

**DOCUMENT NOT CONSIDERED FINAL UNLESS ALL SIGNATURES COMPLETED**

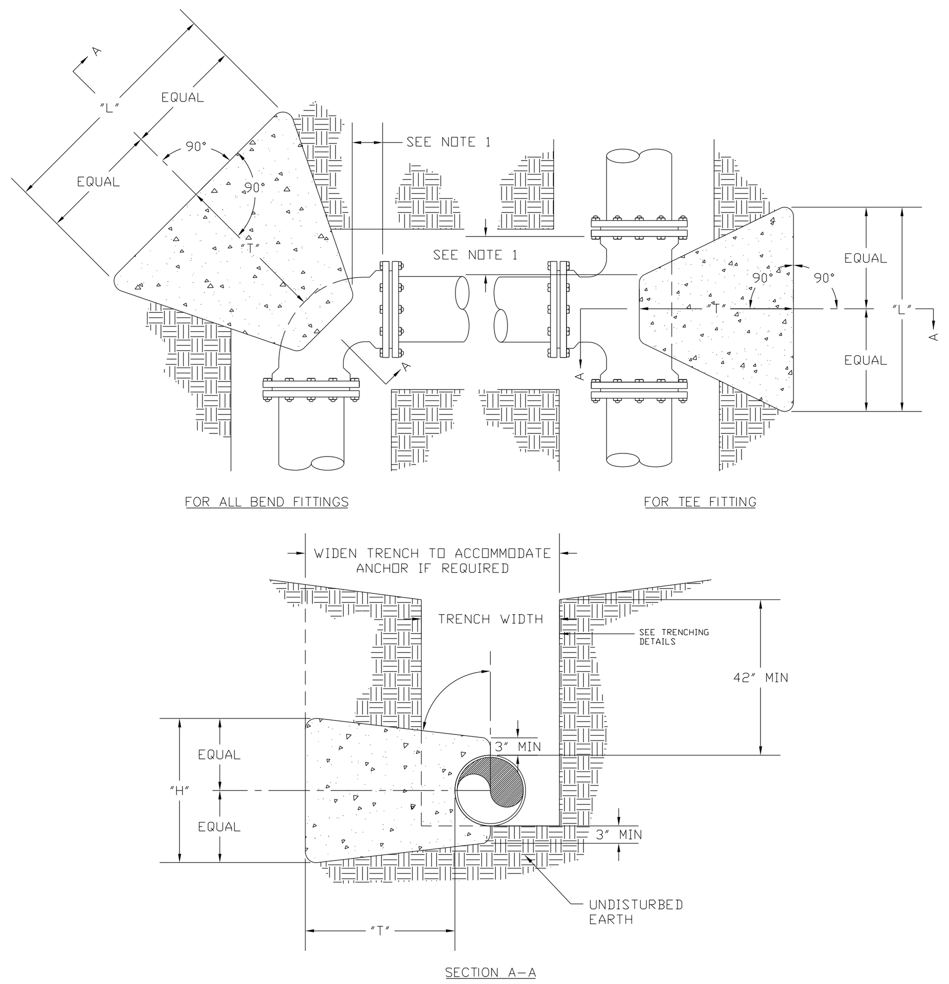


NOTES:
1. CONCRETE BLOCKING IS TO BE FORMED TO ENSURE ACCESSIBILITY TO FITTINGS AND POURED AGAINST UNDISTURBED EARTH.
2. ALL FITTINGS SHALL BE WRAPPED IN POLYETHYLENE TO PREVENT CONCRETE FROM CONTACTING FITTINGS, BOLTS, OR ENDS OF MECHANICAL JOINT BENDS.
3. CONCRETE TO BE MINIMUM 3,000 PSI @ 28 DAYS.
4. WHEN SACKRETE IS TO BE USED, IT SHALL BE PROPERLY MIXED PER MANUFACTURER SPECIFICATIONS.
5. FOR REQUIRED DIMENSIONS, SEE WS_TB2

Onslow Water & Sewer Authority
USE WITH "ONWASA MANUAL OF SPECIFICATIONS, STANDARDS and DETAILS, latest revision"
THRUST BLOCKING
SCALE: Not To Scale | DETAIL # WS_TB1 | REVISION DATE: May, 2016 | SHEET #: 1 of 4

TEST PRESSURE = 150 PSI

| PIPE SIZE | TYPE FITTING | DIMENSIONS (FT) "L" | "H" | "T" | VOLUME CONCRETE CU. YD. |
|---|---|---|---|---|---|
| <4 INCHES | 11 1/4° | ---- | ---- | ---- | ---- |
| | 22 1/2° | 1.00 | 1.00 | 1.50 | 0.06 |
| | 45° | 1.00 | 1.00 | 1.50 | 0.06 |
| | 90° | 1.00 | 1.00 | 2.50 | 0.09 |
| | TEE | 1.00 | 1.00 | 2.00 | 0.07 |
| INCHES | 11 1/4° | 1.00 | 1.00 | 2.50 | 0.09 |
| | 22 1/2° | 1.00 | 1.00 | 2.50 | 0.09 |
| | 45° | 1.00 | 1.00 | 2.50 | 0.09 |
| | 90° | 1.50 | 1.50 | 2.50 | 0.15 |
| | TEE | 1.50 | 1.50 | 2.00 | 0.12 |
| 6 INCHES | 11 1/4° | 1.50 | 1.50 | 2.50 | 0.15 |
| | 22 1/2° | 1.50 | 1.50 | 2.50 | 0.15 |
| | 45° | 1.50 | 1.50 | 2.50 | 0.15 |
| | 90° | 2.00 | 2.00 | 3.00 | 0.28 |
| | TEE | 2.00 | 2.00 | 2.50 | 0.23 |
| 8 INCHES | 11 1/4° | 2.00 | 2.00 | 2.50 | 0.23 |
| | 22 1/2° | 2.00 | 2.00 | 2.50 | 0.23 |
| | 45° | 2.00 | 2.00 | 2.75 | 0.25 |
| | 90° | 3.00 | 2.00 | 3.00 | 0.39 |
| | TEE | 3.00 | 2.00 | 2.50 | 0.32 |
| 12 INCHES | 11 1/4° | 2.00 | 2.00 | 3.00 | 0.28 |
| | 22 1/2° | 2.00 | 2.00 | 3.00 | 0.28 |
| | 45° | 3.00 | 2.50 | 3.00 | 0.47 |
| | 90° | 4.50 | 3.00 | 3.50 | 0.94 |
| | TEE | 4.50 | 3.00 | 3.00 | 0.81 |
| 16 INCHES | 11 1/4° | 2.00 | 2.00 | 3.00 | 0.28 |
| | 22 1/2° | 3.00 | 2.00 | 3.00 | 0.39 |
| | 45° | 4.00 | 3.00 | 3.50 | 0.84 |
| | 90° | 6.50 | 3.50 | 3.50 | 1.54 |
| | TEE | 6.50 | 3.50 | 3.00 | 1.32 |

TEST PRESSURE = 200 PSI

| PIPE SIZE | TYPE FITTING | DIMENSIONS (FT) "L" | "H" | "T" | VOLUME CONCRETE CU. YD. |
|---|---|---|---|---|---|
| <4 INCHES | 11 1/4° | 1.00 | 1.00 | 1.00 | 0.04 |
| | 22 1/2° | 1.00 | 1.00 | 1.50 | 0.06 |
| | 45° | 1.00 | 1.00 | 1.50 | 0.06 |
| | 90° | 1.50 | 1.50 | 2.50 | 0.15 |
| | TEE | 1.50 | 1.50 | 2.00 | 0.12 |
| INCHES | 11 1/4° | 1.00 | 1.00 | 2.50 | 0.09 |
| | 22 1/2° | 1.00 | 1.00 | 2.50 | 0.09 |
| | 45° | 1.50 | 1.50 | 2.50 | 0.15 |
| | 90° | 1.50 | 1.50 | 2.50 | 0.15 |
| | TEE | 1.50 | 1.50 | 2.00 | 0.12 |
| 6 INCHES | 11 1/4° | 1.50 | 1.50 | 2.50 | 0.15 |
| | 22 1/2° | 1.50 | 1.50 | 2.50 | 0.15 |
| | 45° | 1.50 | 1.50 | 2.50 | 0.15 |
| | 90° | 2.50 | 2.00 | 3.00 | 0.33 |
| | TEE | 2.50 | 2.00 | 2.50 | 0.28 |
| 8 INCHES | 11 1/4° | 2.00 | 2.00 | 2.50 | 0.23 |
| | 22 1/2° | 2.00 | 2.00 | 2.50 | 0.23 |
| | 45° | 2.00 | 2.00 | 2.75 | 0.23 |
| | 90° | 4.00 | 2.00 | 3.00 | 0.50 |
| | TEE | 4.00 | 2.00 | 2.50 | 0.42 |
| 12 INCHES | 11 1/4° | 2.00 | 2.00 | 3.00 | 0.28 |
| | 22 1/2° | 3.00 | 2.00 | 3.00 | 0.39 |
| | 45° | 4.00 | 2.50 | 3.00 | 0.61 |
| | 90° | 5.50 | 3.00 | 3.50 | 1.13 |
| | TEE | 5.50 | 3.00 | 3.00 | 0.97 |
| 16 INCHES | 11 1/4° | 2.00 | 2.00 | 3.00 | 0.28 |
| | 22 1/2° | 4.00 | 2.00 | 3.00 | 0.50 |
| | 45° | 5.50 | 3.00 | 3.50 | 1.13 |
| | 90° | 7.50 | 4.00 | 3.50 | 2.01 |
| | TEE | 7.50 | 4.00 | 3.00 | 1.72 |

CHART NOTES:
1. IF BLOCKING EXCAVATION IS IN LIGHTLY COMPACTED FILL AREAS, OR IN AREAS WHERE BOULDERS OR STUMPS HAVE BEEN REMOVED, BLOCKING SIZE MUST BE RE-SIZED FOR THE SPECIFIC LOCATION/CIRCUMSTANCE BY A NC LICENSED PROFESSIONAL ENGINEER.
2. BLOCKING SIZES SHOWN IN THESE TABLES ASSUME THE FOLLOWING:
   a. BLOCKING IS CONSTRUCTED IN RESIDUAL SOILS AS SHOWN IN DETAIL
   b. SOIL BEARING PRESSURE = 2000 PSF
   c. VELOCITY OF FLOW = 15 FPS
3. THIS DETAIL NOT APPLICABLE TO REDUCING BENDS.
4. NEITHER THE WEIGHT OF THE CONCRETE BLOCKING NOR FRICTION BETWEEN CONCRETE BLOCKING AND SOIL WAS ADDED INTO BLOCKING SIZES COMPUTATION. THEREFORE, BLOCKING SIZE IS CONSERVATIVE.

Onslow Water & Sewer Authority
USE WITH "ONWASA MANUAL OF SPECIFICATIONS, STANDARDS and DETAILS, latest revision"
THRUST BLOCKING
SCALE: Not To Scale | DETAIL # WS_TB2 | REVISION DATE: May, 2016 | SHEET #: 2 of 4

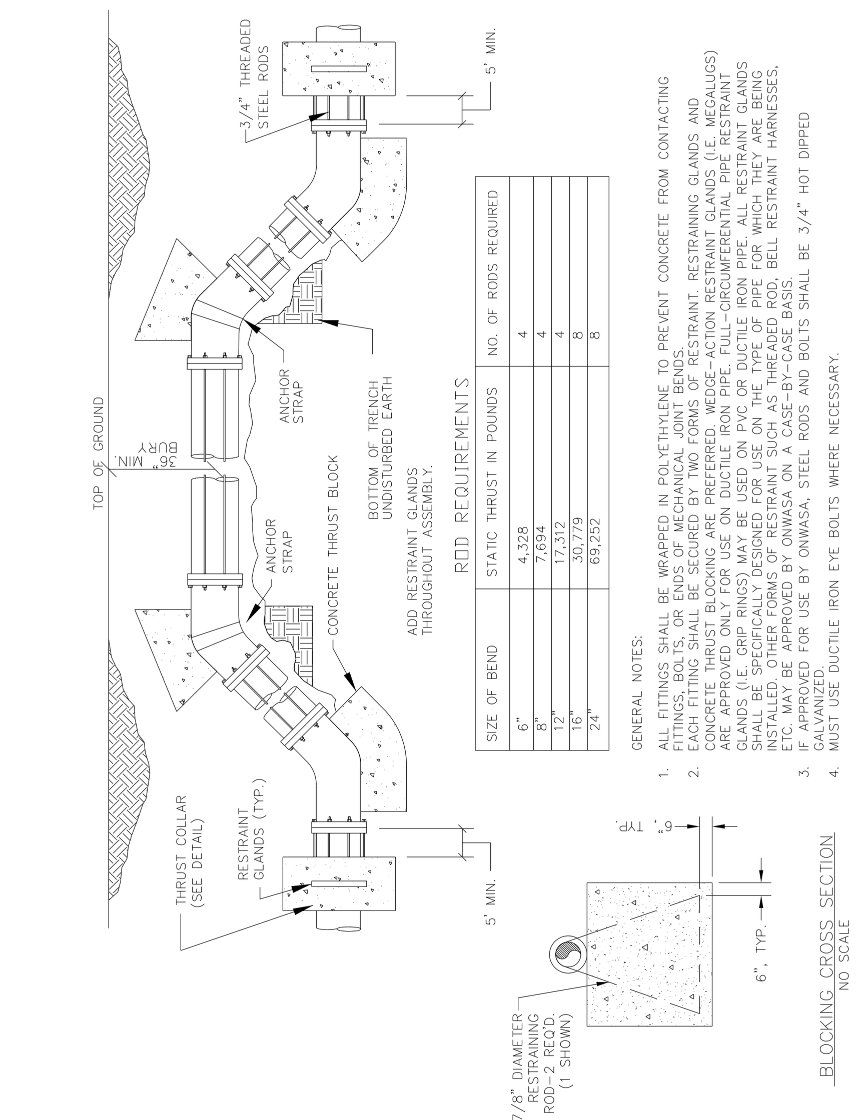


ROD REQUIREMENTS

| SIZE OF BEND | STATIC THRUST IN POUNDS | NO. OF RODS REQUIRED |
|---|---|---|
| 6" | 4,328 | 4 |
| 8" | 7,694 | 4 |
| 12" | 17,312 | 4 |
| 16" | 30,779 | 8 |
| 24" | 69,252 | 8 |

GENERAL NOTES:
1. ALL FITTINGS SHALL BE WRAPPED IN POLYETHYLENE TO PREVENT CONCRETE FROM CONTACTING FITTINGS, BOLTS, OR ENDS OF MECHANICAL JOINT BENDS.
2. EACH FITTING SHALL BE SECURED BY TWO FORMS OF RESTRAINT. RESTRAINING GLANDS AND CONCRETE THRUST BLOCKING ARE PREFERRED. WEDGE-ACTION RESTRAINT GLANDS (I.E. MEGALUGS) ARE APPROVED ONLY FOR USE ON DUCTILE IRON PIPE. FULL-CIRCUMFERENTIAL PIPE RESTRAINT GLANDS (I.E. GRIP RINGS) MAY BE USED ON PVC OR DUCTILE IRON PIPE. ALL RESTRAINT GLANDS SHALL BE SPECIFICALLY DESIGNED FOR USE ON THE TYPE OF PIPE FOR WHICH THEY ARE BEING INSTALLED. OTHER FORMS OF RESTRAINT SUCH AS THREADED ROD, BELL RESTRAINT HARNESSES, ETC. MAY BE APPROVED BY ONWASA ON A CASE-BY-CASE BASIS.
3. IF APPROVED FOR USE BY ONWASA, STEEL RODS AND BOLTS SHALL BE 3/4" HOT DIPPED GALVANIZED.
4. MUST USE DUCTILE IRON EYE BOLTS WHERE NECESSARY.

Onslow Water & Sewer Authority
USE WITH "ONWASA MANUAL OF SPECIFICATIONS, STANDARDS and DETAILS, latest revision"
THRUST BLOCKING
SCALE: Not To Scale | DETAIL # WS_TB3 | REVISION DATE: May, 2016 | SHEET #: 3 of 4

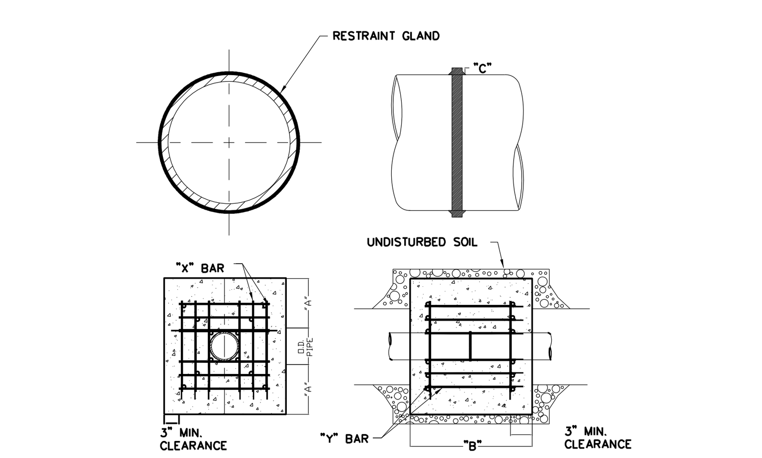


REINFORCING REQUIREMENTS

| I.D. PIPE | REBAR SIZE | "X" BAR LENGTH | "X" BAR WEIGHT | "Y" BAR LENGTH | "Y" BAR WEIGHT | NO. REQUIRED |
|---|---|---|---|---|---|---|
| 6" – 36" | #5 | 2'-2"+ O.D. PIPE | 1.043 LBS/FT | 1'-1" | 1.1 LBS. EACH | X-24, Y-12 |
| 48" & greater | #6 | 3'-0"+ O.D. PIPE | 1.502 LBS/FT | 1'-3" | 1.9 LBS. EACH | X-24, Y-12 |

THRUST COLLAR, AND THRUST SCHEDULE

| I.D. PIPE | "A" | "B" | "C-6"-16", 20"-24", 30"-36", 48" |
|---|---|---|---|
| 6" – 36" | 1'-4" | 1'-7" | 2" 3" 4" |
| 48" & greater | 1'-8" | 1'-9" | 6" |

NOTES:
1. CONCRETE SHALL BE 3000 PSI AND TRANSIT MIXED.
2. REINFORCING BARS SHALL BE DEFORMED AND TIED TOGETHER.
3. TRENCH BOTTOM WIDTH IN VICINITY OF THRUST BLOCK INSTALLATION SHALL BE THE MINIMUM WIDTH AS SHOWN ON STANDARD EMBEDMENT DETAIL.
4. BACKFILL TAMPED IN 6" LIFTS PER STANDARD EMBEDMENT DETAIL.

Onslow Water & Sewer Authority
USE WITH "ONWASA MANUAL OF SPECIFICATIONS, STANDARDS and DETAILS, latest revision"
THRUST BLOCKING
SCALE: Not To Scale | DETAIL # WS_TB4 | REVISION DATE: May, 2016 | SHEET #: 4 of 4

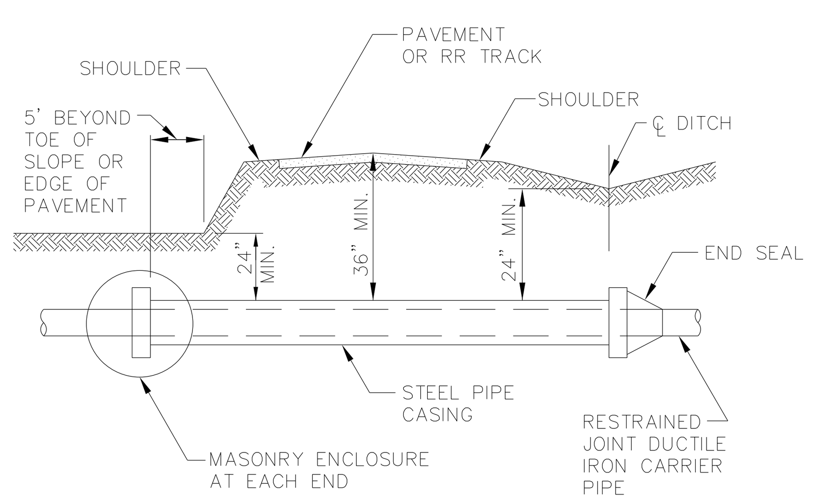


TYPICAL PIPE CROSSING

ENCASEMENTS SHALL EXTEND FROM DITCH LINE TO DITCH LINE IN CUT SECTIONS, FIVE (5) FEET BEYOND THE TOE OF SLOPES IN FILL SECTIONS, AND TEN (10) FEET BEYOND EDGE OF PAVEMENT IN SECTIONS WITH NO DITCH OR FILL AREA.

NOTES:
1. STEEL ENCASEMENT PIPE SHALL CONFORM TO THE REQUIREMENTS OF THE PROJECT SPECIFICATIONS.
2. CARRIER PIPE SHALL BE ADEQUATELY SUPPORTED THE ENTIRE LENGTH WITHIN THE CASING BY USING SPACERS OR "SPIDER" STEEL SUPPORTS AT A MAXIMUM OF 9 FOOT CENTERS (ONE AT EACH JOINT AND ONE INTERMEDIATE). OTHER METHODS MUST MEET APPROVAL OF THE ENGINEER.

Onslow Water & Sewer Authority
USE WITH "ONWASA MANUAL OF SPECIFICATIONS, STANDARDS and DETAILS, latest revision"
DRY BORE AND JACK PIPE ENCASEMENT
SCALE: Not To Scale | DETAIL # WS_B&J | REVISION DATE: May, 2016 | SHEET #: 1 of 1

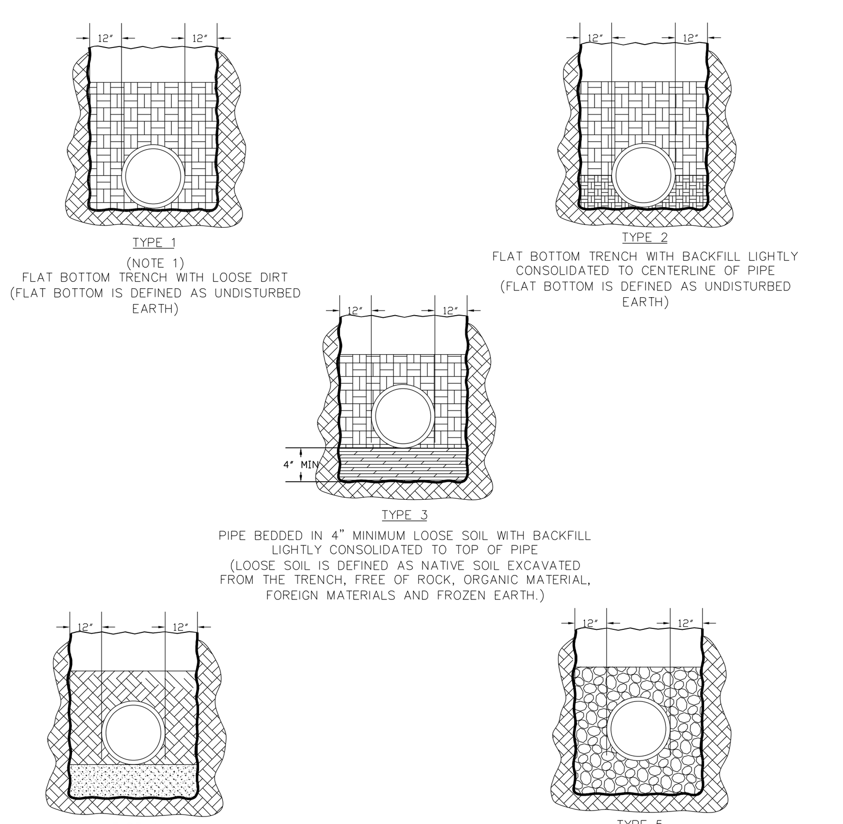


TYPE 1 (NOTE 1) FLAT BOTTOM TRENCH WITH LOOSE DIRT (FLAT BOTTOM IS DEFINED AS UNDISTURBED EARTH)

TYPE 2 FLAT BOTTOM TRENCH WITH BACKFILL LIGHTLY CONSOLIDATED TO CENTERLINE OF PIPE (FLAT BOTTOM IS DEFINED AS UNDISTURBED EARTH)

TYPE 3 PIPE BEDDED IN 4" MINIMUM LOOSE SOIL WITH BACKFILL LIGHTLY CONSOLIDATED TO TOP OF PIPE (LOOSE SOIL IS DEFINED AS NATIVE SOIL EXCAVATED FROM THE TRENCH, FREE OF ROCK, ORGANIC MATERIAL, FOREIGN MATERIALS AND FROZEN EARTH.)

TYPE 4 PIPE BEDDED IN SAND, GRAVEL, OR CRUSHED STONE TO A DEPTH OF 1/8 PIPE DIAMETER, 4" MINIMUM WITH BACKFILL COMPACTED TO TOP OF PIPE. (APPROXIMATELY 80 PERCENT STANDARD PROCTOR, AASHTO T-99)

TYPE 5 PIPE BEDDED TO IT'S CENTERLINE IN COMPACTED GRANULAR MATERIAL, 4" MINIMUM UNDER PIPE. COMPACTED GRANULAR OR SELECT MATERIAL TO TOP OF PIPE. (APPROXIMATELY 90 PERCENT STANDARD PROCTOR, AASTO T-99) (SELECT MATERIAL IS DEFINED AS NATIVE SOIL EXCAVATED FROM THE TRENCH, FREE OF ROCKS, ORGANIC MATERIAL, FOREIGN MATERIALS AND FROZEN EARTH)

NOTES:
1. FOR NORMAL PIPE SIZES 14 INCH AND LARGER, CONSIDERATION SHOULD BE GIVEN TO THE USE OF LAYING CONDITIONS OTHER THAN TYPE 1.
2. CONSIDERATION OF THE PIPE-ZONE EMBEDMENT CONDITIONS INCLUDED IN THIS FIGURE MAY BE INFLUENCED BY FACTORS OTHER THAN PIPE STRENGTH. FOR ADDITIONAL INFORMATION ON PIPE BEDDING AND BACKFILL, SEE ANSI/AWWA C600.

Onslow Water & Sewer Authority
USE WITH "ONWASA MANUAL OF SPECIFICATIONS, STANDARDS and DETAILS, latest revision"
WATER MAIN EMBEDMENT DETAILS
SCALE: Not To Scale | DETAIL # WS_ED | REVISION DATE: May, 2016 | SHEET #: 1 of 1

NOTE: CONCRETE VALVE COLLAR REQUIRED ON ALL VALVES.

APPROVED METHOD FOR EXTENSION OF VALVE BOX

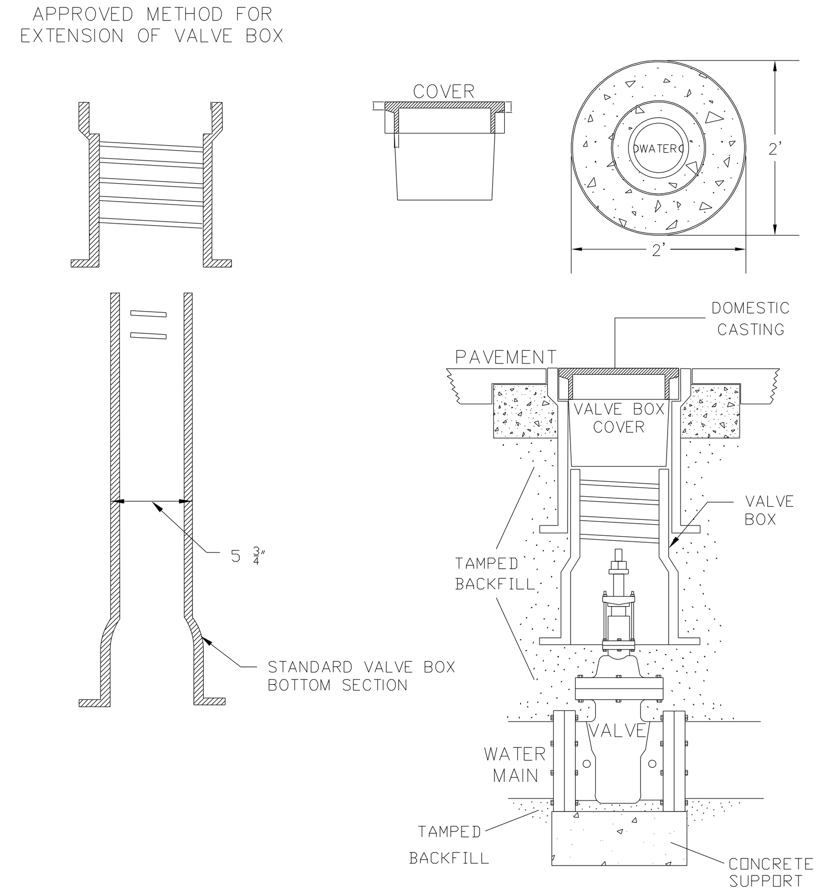


NOTE:
VALVE BOX SHALL BE PER ONWASA'S SPECIFICATIONS

Onslow Water & Sewer Authority
USE WITH "ONWASA MANUAL OF SPECIFICATIONS, STANDARDS and DETAILS, latest revision"
VALVE BOX INSTALLATION
SCALE: Not To Scale | DETAIL # WS_VB | REVISION DATE: May, 2016 | SHEET #: 1 of 1

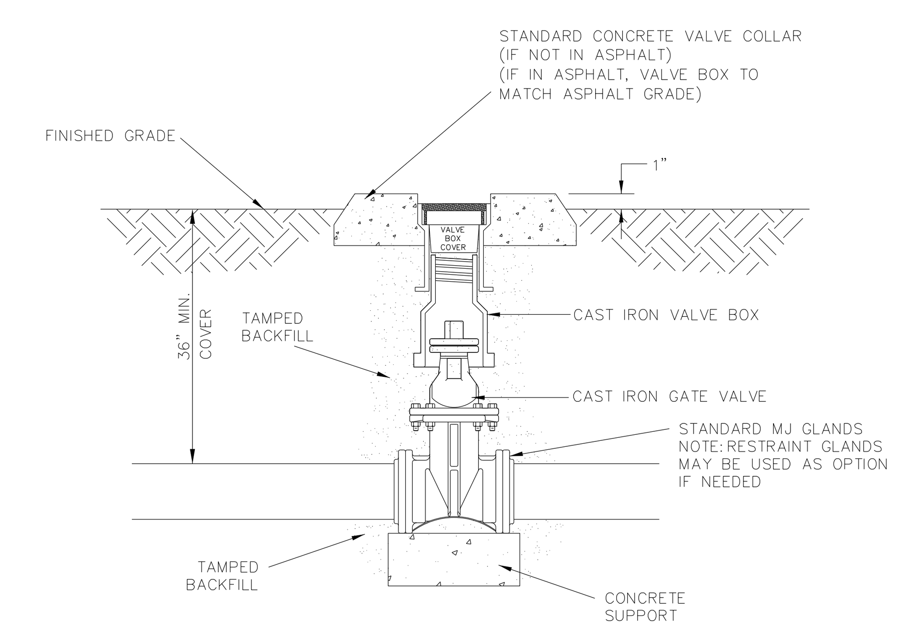


Onslow Water & Sewer Authority
USE WITH "ONWASA MANUAL OF SPECIFICATIONS, STANDARDS and DETAILS, latest revision"
INLINE VALVE DETAIL
SCALE: Not To Scale | DETAIL # WS_ILV | REVISION DATE: May, 2016 | SHEET #: 1 of 1

Parts List
1 - Rhino # TVF66UB - Rhino TriView Flex™, 66" Blue with Black Cap OR
1 - Rhino # TVTI66UW2 - Rhino TriView™ Test Station, 66", 2 Inside Terminals, Blue with White Cap
1 - Cap Lock - TS-LOCK for Test Stations
3 - Decal # SD-8516K Custom Decals

NOTES:
The TriGrip Anchor Flaps™ shall be extended priorty to burial of the post. Soil shall be compacted during placement of marker post.

All materials shall be provided by Rhino Marking & Protection Sytems, Inc.

Install above-ground utility markers at horizontal bends, main-line valve boxes (not within 10 feet of a fire hydrant assembly branch), ends of directional bores, bank edge of all channels crossed by directionl bores, each side of a roadway crossing, and along the piping alignment. The maximum spacing for the above-ground utility markers shall be 500 linear feet. In locations where there are multiple horizontal bends in close proximity, one marker will be sufficient to demonstrate the change in direction. Utility markers designed to provide access to tracer wire shall be installed at every third marker, or every 1000 feet of pipe, whichever is lesser. Tracer wire accesible above-ground utility markers shall also be installed at ends of directional bores.

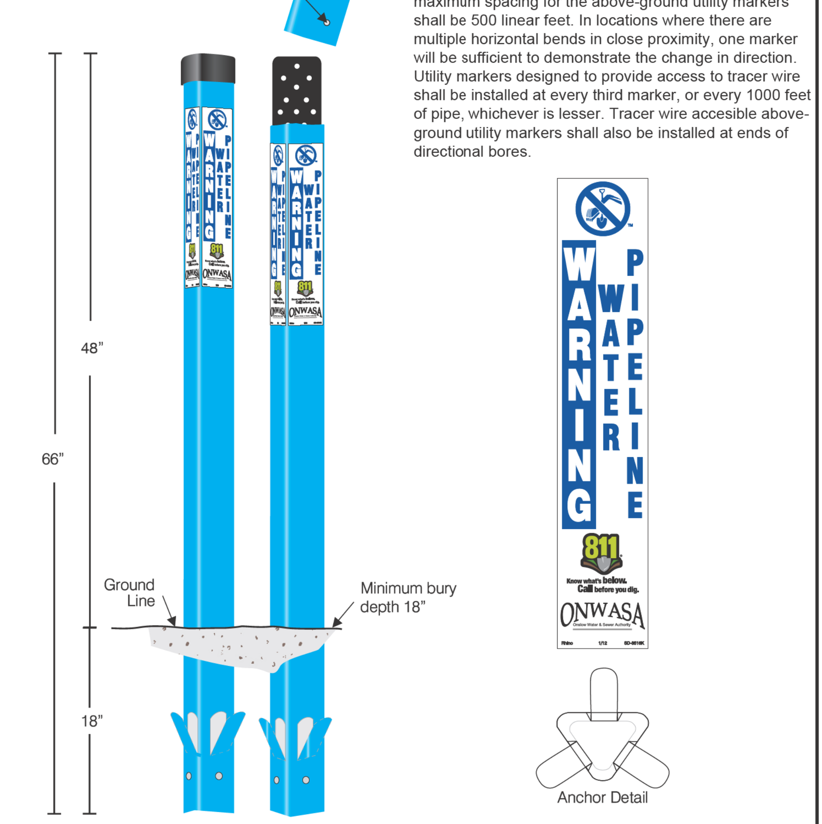


Onslow Water & Sewer Authority
USE WITH "ONWASA MANUAL OF SPECIFICATIONS, STANDARDS and DETAILS, latest revision"
STANDARD UTILITY MARKER FOR WATER MAIN
SCALE: Not To Scale | DETAIL # WS_WMRK | REVISION DATE: May, 2016 | SHEET #: 1 of 1

5/14/99
$$$$$$$$$$SYSTIME$$$$
$$$$$$$$$$$$$$$$DGN$$$$$$$$$$$$$$$$$$
$$$$$$$$USERNAME$$$$