DocuSign Envelope ID: A8C71C21-4A01-49E2-BB2A-7A781A079996

PROJECT REFERENCE NO.	SHEET NO.
U-5719	2C-13

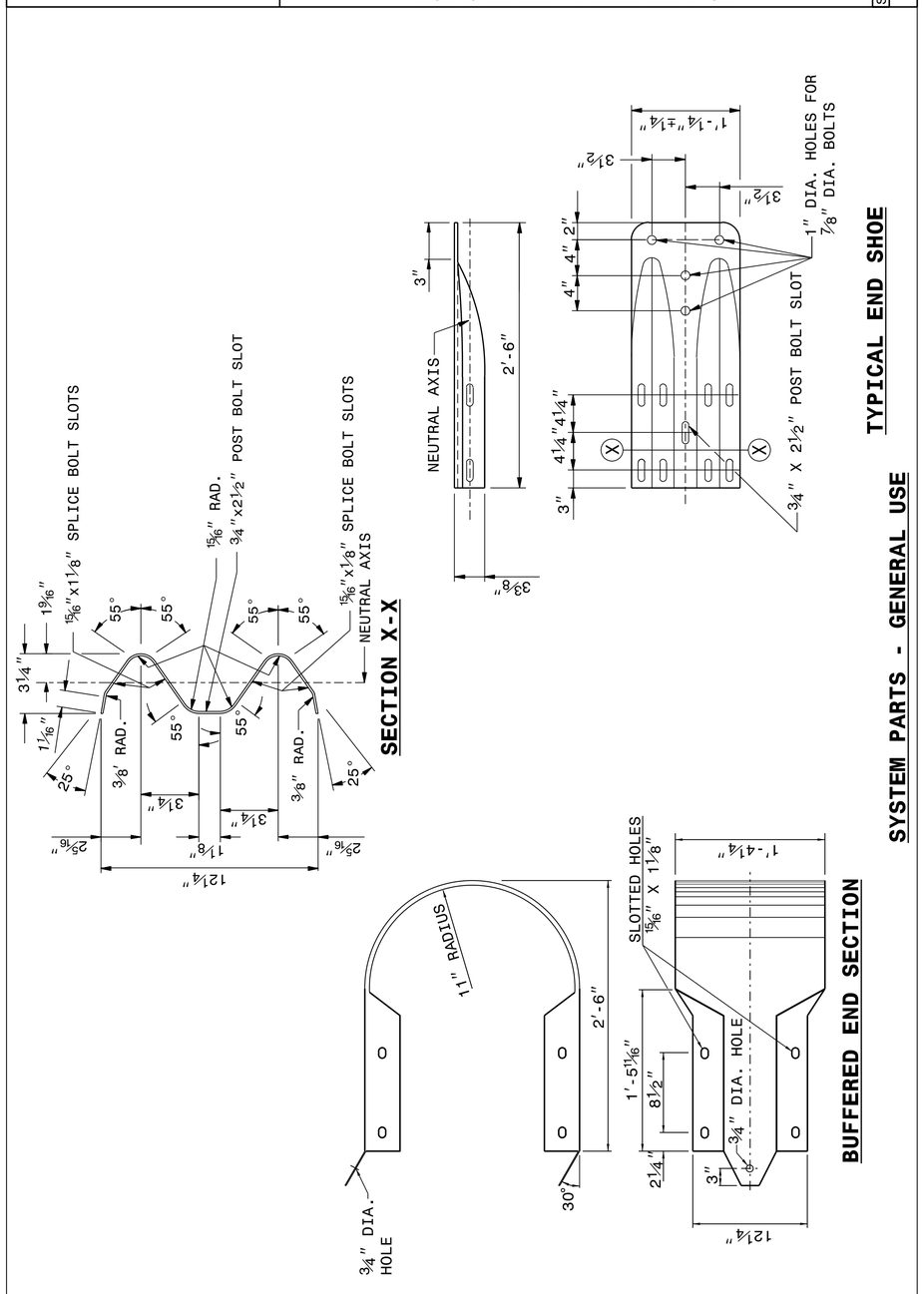

STATE OF NORTH CAROLINA DEPT. OF TRANSPORTATION DIVISION OF HIGHWAYS RALEIGH, N.C.

ROADWAY DETAIL DRAWING FOR **GUARDRAIL INSTALLATION**

SHEET 8 OF 8 **862D02**

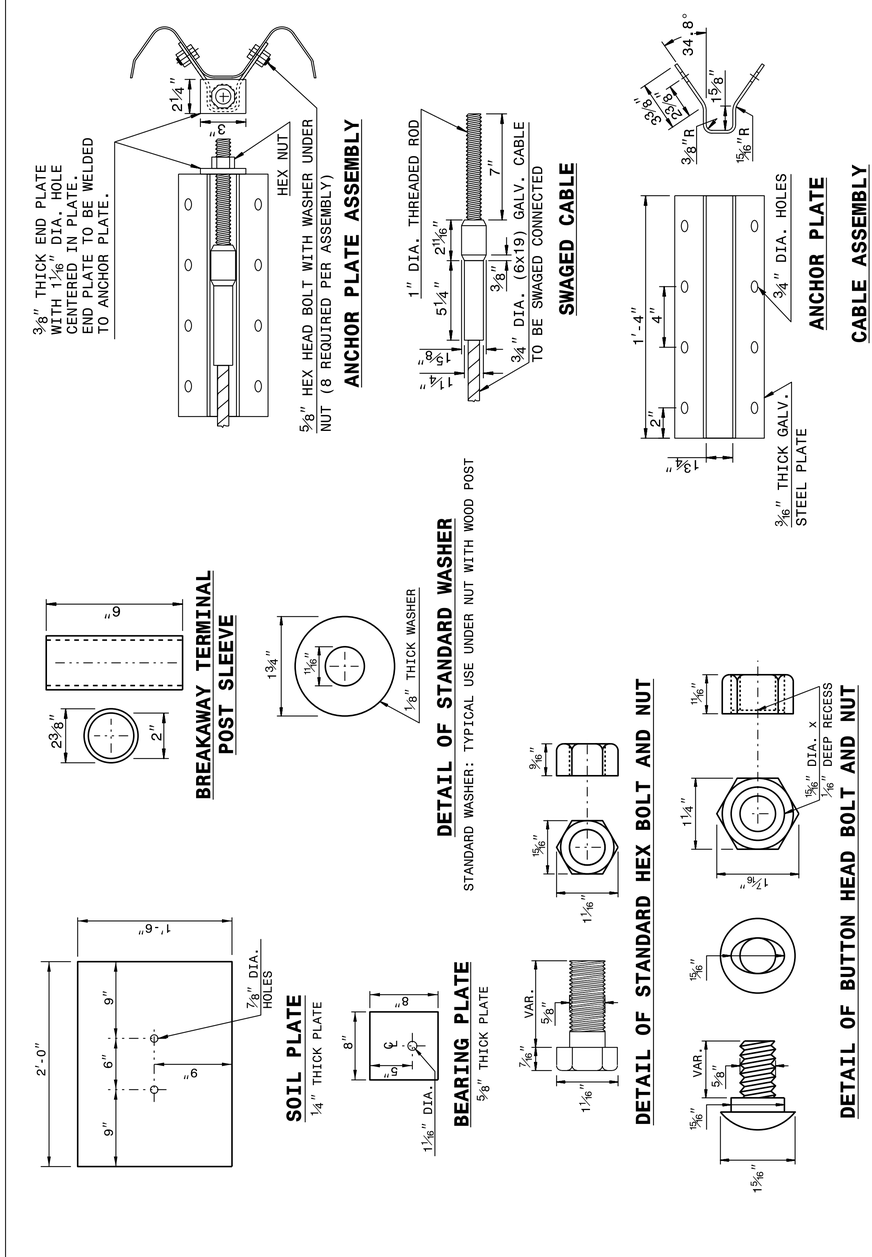

STATE OF NORTH CAROLINA DEPT. OF TRANSPORTATION DIVISION OF HIGHWAYS RALEIGH, N.C.

ROADWAY DETAIL DRAWING FOR **GUARDRAIL INSTALLATION**

SHEET 7 OF 8 **862D02**

STATE OF NORTH CAROLINA DEPT. OF TRANSPORTATION DIVISION OF HIGHWAYS RALEIGH, N.C.

ROADWAY DETAIL DRAWING FOR **GUARDRAIL INSTALLATION**

SHEET 8 OF 8 **862D02**

NORTH CAROLINA PROFESSIONAL SEAL 022966 ENGINEER
DocuSigned by: J. Howerton
573F3D17D7...
6/14/2017

DOCUMENT NOT CONSIDERED FINAL UNLESS ALL SIGNATURES COMPLETED

CONTRACT STANDARDS AND DEVELOPMENT UNIT
Office 919-707-6950 FAX 919-250-4119

SEE TITLE BLOCK

ORIGINAL BY: J HOWERTON DATE: 06-22-12
MODIFIED BY: DATE:
CHECKED BY: DATE:
FILE SPEC.:

14-JUN-2017 09:01
S:\Contracts\Contracts\Special Details\jhowerton\Standard Drawings\2012 Standard Drawings\Details in Lieu of Standards\Division 8\862d01 862d03 862d02.dgn
jhowerton AT CSD-292595