CH ENGINEERING
3220 GLEN ROYAL RD. RALEIGH, NC 27617
TELE 919.788.0224 FAX 919.788.0232
NC LICENSE #P-0189

PROJECT REFERENCE NO.	SHEET NO.
U-5719	UC-5
DESIGNED BY: EMT	
DRAWN BY: EMT	
CHECKED BY:	
APPROVED BY:	
REVISED:	
NORTH CAROLINA DEPARTMENT OF TRANSPORTATION	
UTILITIES ENGINEERING SECTION PHONE:(919)707-6690 FAX:(919)250-4151	UTILITY CONSTRUCTION PLANS ONLY

NORTH CAROLINA PROFESSIONAL SEAL 028912 ENGINEER ERIC M TWEED
DocuSigned by: Eric Tweed 3/29/2017
300C9281B1B0415

UTILITY CONSTRUCTION

DOCUMENT NOT CONSIDERED FINAL UNLESS ALL SIGNATURES COMPLETED

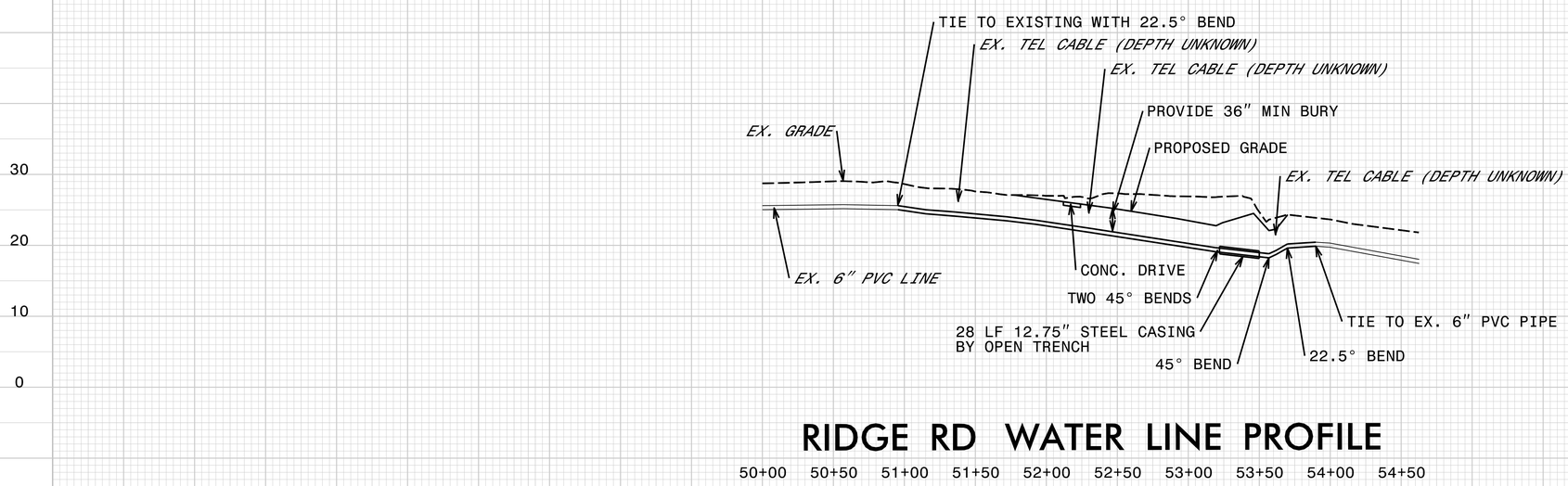

RIDGE RD WATER LINE PROFILE

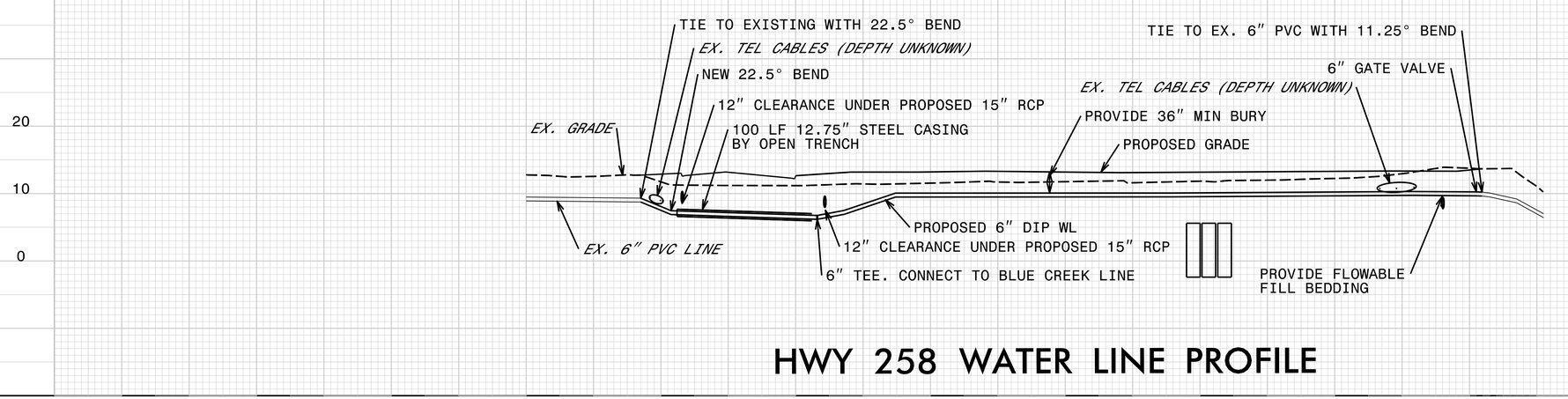

HWY 258 WATER LINE PROFILE

5/14/99
$$$