DocuSign Envelope ID: 1F28AB80-26FE-4597-9203-AB8E5CE212CC

5/14/99

PROJECT REFERENCE NO.	SHEET NO.
U-5719	2C-3

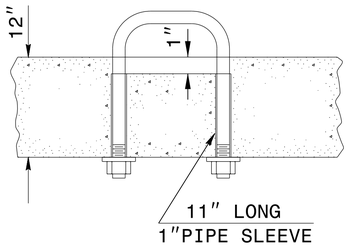

PARTIAL SECTION

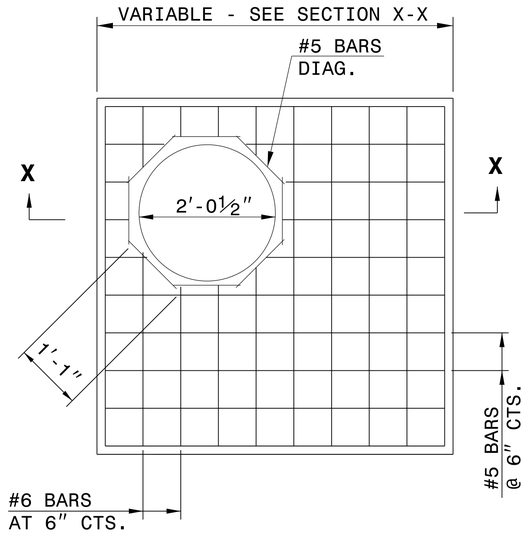

PLAN

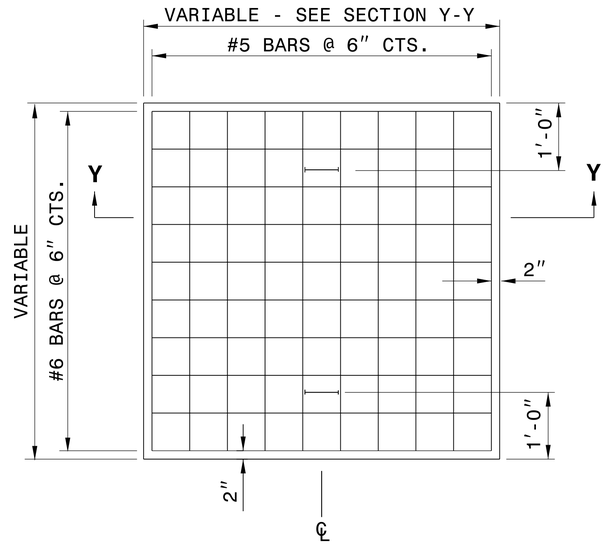

PLAN

GENERAL NOTES:

CONSTRUCT IN ACCORDANCE WITH SECTION 859 OF THE STANDARD SPECIFICATIONS.

FIELD VERIFY THE DIMENSIONS FOR THE EXISTING BOXES.

BILL OF MATERIALS

MASONRY	
TOP SLAB CONCRETE CLASS "A"	.037YDS^3 PER FT^2
BRICK MASONRY	.025YDS^3 PER FT^2
REINFORCING STEEL	7.64LBS PER FT^2

MANHOLE OPTION QUANTITIES

SIZE	QTY.	LENGTH	REINF. STEEL LBS.
#5 DIAG.	8	1'-1"	9.04

NOTE:
CONCRETE AND REINFORCING STEEL QUANTITIES BASED ON SQUARE FOOT AREA OF THE PROPOSED TOP SLAB FOR THE EXISTING DRAINAGE STRUCTURE.

BRICK MASONRY QUANTITY IS BASED ON THE TOTAL SQUARE FOOTAGE OF EXTERIOR WALL SURFACE AREA TO BE CONSTRUCTED.

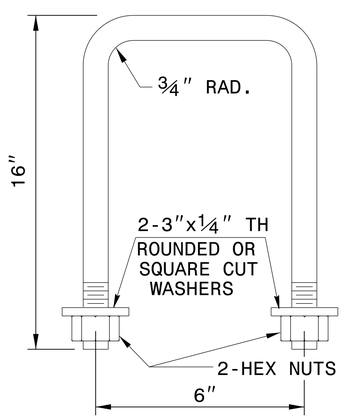

DETAIL OF HANDLE

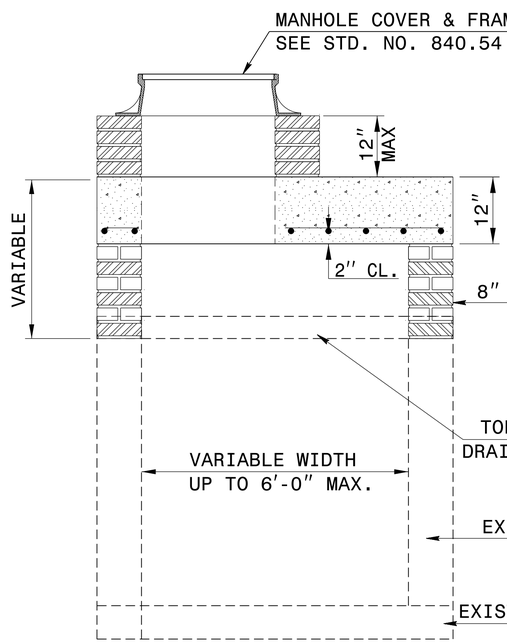

SECTION X-X

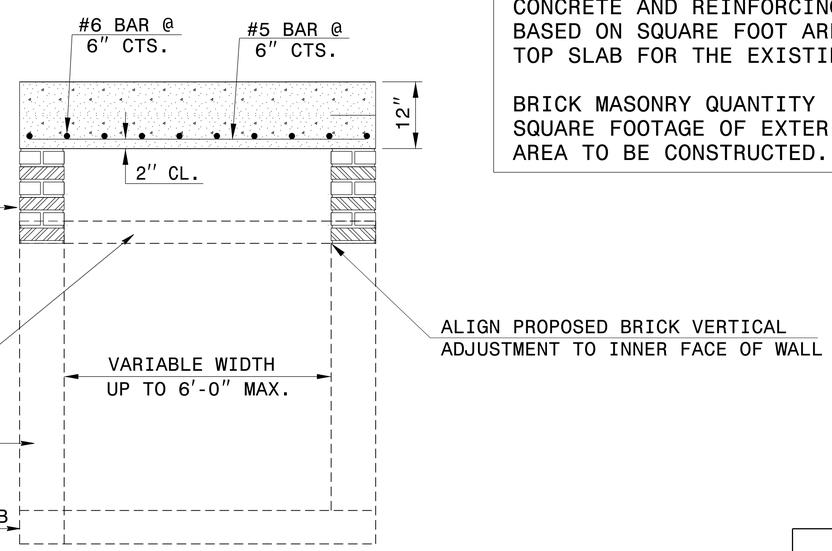

SECTION Y-Y

CONTRACT STANDARDS AND DEVELOPMENT UNIT
Office 919-707-6950 FAX 919-250-4119

DETAIL TO CONVERT EXISTING TRAFFIC BEARING DROP INLET OR CATCH BASIN TO TRAFFIC BEARING JUNCTION BOX (MANHOLE OPTIONAL)

ORIGINAL BY: T.S.S. DATE: FEB.2000
MODIFIED BY: E.E.W. DATE: NOV.2001
CHECKED BY: DATE:
FILE SPEC.: w:ericward/usr/details/stand/boxtotbjbe.dgn

DOCUMENT NOT CONSIDERED FINAL UNLESS ALL SIGNATURES COMPLETED

$$$$$$$$$$USERNAME$$$$$$$$$$USERNAME$$$$$$$$$$SYSTIME$$$$$$$$$$