DocuSign Envelope ID: AB5AAF16-51A2-4716-B865-96C2AA3A7807

5/14/99

PROJECT REFERENCE NO.	SHEET NO.
17BP.3.C.2	UC-3B
DESIGNED BY: SHF	
DRAWN BY: SHF	
CHECKED BY: KCZ	
APPROVED BY: KCZ	
REVISED:	
NORTH CAROLINA DEPARTMENT OF TRANSPORTATION	
UTILITIES ENGINEERING SEC. PHONE:(919)707-6690 FAX:(919)250-4151	UTILITY CONSTRUCTION PLANS ONLY

NORTH CAROLINA PROFESSIONAL SEAL 022661 ENGINEER KEVIN C. ZOBEL

Docu Sign Envelope ID: 5/21/2018 3:18:22 PM EDT

UTILITY CONSTRUCTION

M A Engineering Consultants, Inc.
598 East Chatham Street - Suite 137
Cary, NC 27511
Phone: 919.297.0220 Fax: 919.297.0221
NC License: F-0160

DOCUMENT NOT CONSIDERED FINAL UNTIL ALL SIGNATURES ARE COMPLETED

BLOCKING DIMENSIONS			
PIPE SIZE	(A)	(B)	(C)
UP TO 10"	4' - 0"	2' - 6"	1' - 6"
12" TO 16"	5' - 0"	4' - 0"	2' - 0"
18" TO 24"	8' - 0"	6' - 0"	3' - 0"

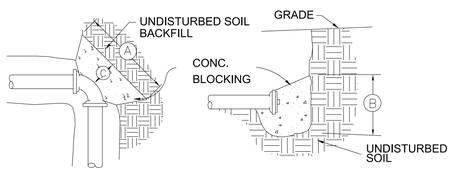

PLAN - BEND
SEE SECTION FOR DEPTH B

SECTION - PLUG
SEE PLAN FOR LENGTH A

NOTES:
1. 2500 P.S.I. CONC.
2. REMOVE LOOSE EARTH AND POUR AGAINST UNDISTURBED SOIL.
3. BACKFILL TO EXISTING/FINISH GRADE AFTER CONCRETE HAS CURED FOR 24 HOURS.
4. CONCRETE SHALL NOT COVER FLANGES, BOLTS, MEGA-LUGS, RODS, ETC.

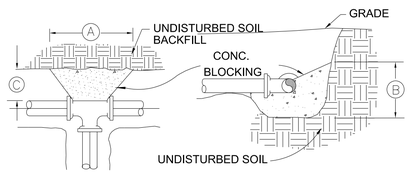

PLAN - TEE
SEE SECTION FOR DEPTH B

SECTION - BEND & TEE
SEE PLAN FOR LENGTH A

THRUST BLOCKS
NOT TO SCALE

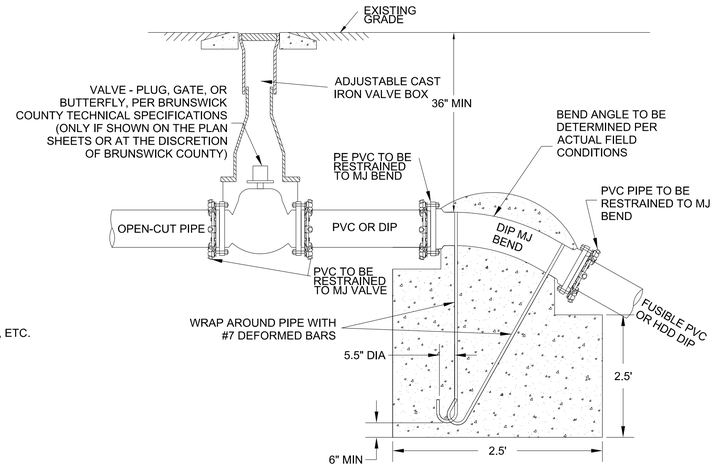

OPEN-CUT PIPE TO FUSIBLE PVC OR HDD DIP TRANSITION ASSEMBLY
NOT TO SCALE

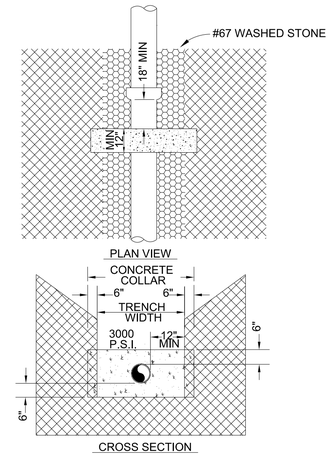

NOTES:
1. UNRESTRAINED SEWER LINES ON 20% SLOPE OR GREATER SHALL BE ANCHORED SECURELY WITH CONCRETE COLLARS. MINIMUM 1 CONCRETE COLLAR PER PIPE JOINT. ADDITIONAL COLLARS MAY BE REQUIRED BY ENGINEER.
2. COLLARS FOR ANTI-SEEPAGE (PIPING) CONTROL FOR PIPELINES CONSTRUCTED THROUGH WETLANDS SHALL BE INSTALLED AT LOCATIONS SHOWN ON THE PLANS.

PIPE COLLAR
NOT TO SCALE

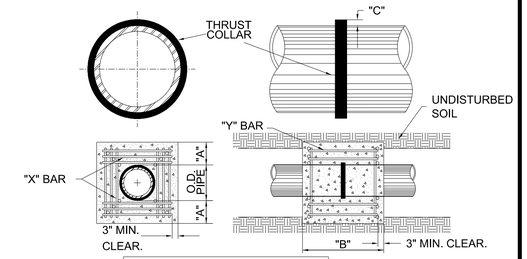

REINFORCING REQUIREMENTS REINFORCING BAR SCHEDULE						
I.D. PIPE	REBAR SIZE	"X" BAR LENGTH	"X" BAR WGHT.	"Y" BAR LENGTH	Y" BAR WGHT.	NO. REQD.
6"-36"	#5	2'-2"+O.D. PIPE	1.043 LBS./FT	1'-1"	1.1 LBS. EA.	X-24,Y-12
48"	#6	3'-0"+O.D. PIPE	1.502 LBS./FT	1'-3"	1.9 LBS. EA.	X-24,Y-12

REINFORCING BAR SCHEDULE						
I.D. PIPE	"A"	"B"	"C" - 6"-16"	20"-24"	30"-36"	48"
6"-36"	1'-4"	1'-7"	2"	3"	4"	
48"	1'-8"	1'-9"				6"

THRUST COLLAR FOR WATER MAINS
NOT TO SCALE

NOTES:
1. CONCRETE SHALL BE 2500 PSI MIN.
2. REINFORCING BARS SHALL BE DEFORMED AND TIED TOGETHER
3. TRENCH BOTTOM WIDTH IN VICINITY OF HRUST BLOCK(S) INSTALLATION SHALL BE MINIMUM WIDTH
4. BACKFILL TAMPED IN 6" LAYERS

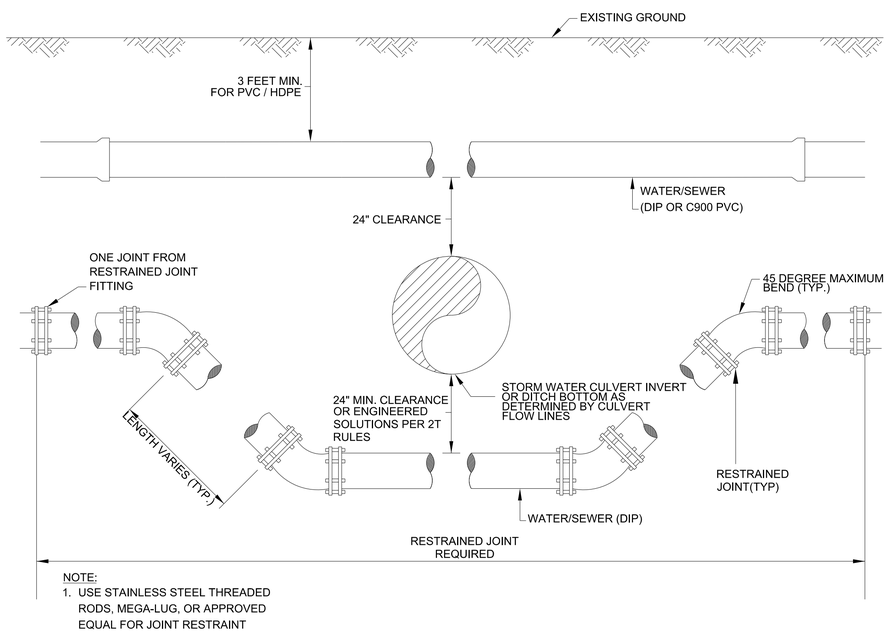

NOTE:
1. USE STAINLESS STEEL THREADED RODS, MEGA-LUG, OR APPROVED EQUAL FOR JOINT RESTRAINT

DITCH AND/OR STORM DRAIN CROSSING
OFFSETS BETWEEN WATER/SEWER PRESSURE MAIN AND STORM DRAIN
NOT TO SCALE

NOTES:
1. THIS DETAIL IS A GENERAL SCHEMATIC SHOWING ISOLATION VALVE LOCATIONS AND AIR RELEASE VALVES.
2. FINAL LOCATION OF PIPE APPURTENANCES SHALL BE COORDINATED WITH RESIDENT ENGINEER AND BRUNSWICK COUNTY REPRESENTATIVE

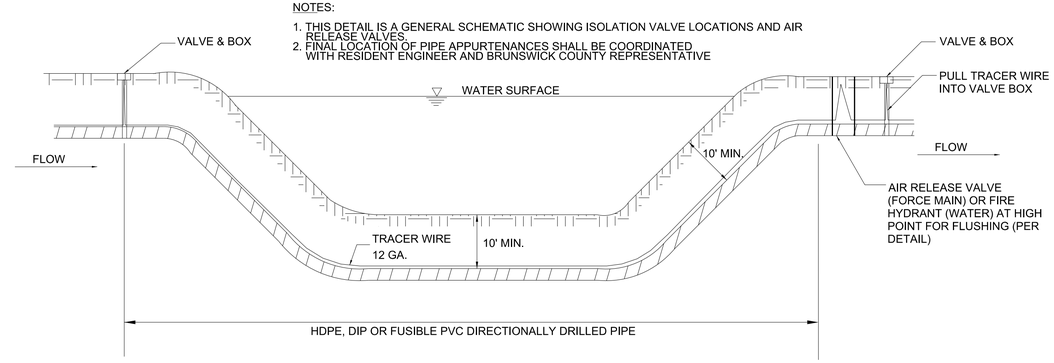

VALVE LOCATIONS FOR DIRECTIONAL DRILL OF PIPE UNDER WETLANDS/WATER BODY
NOT TO SCALE

5/21/2018
2:34:03 PM
C:\Pw_Engineer\JOBS\0696\026\13100 Village Point Rd\UCPrj\17BP3C2_ut_UC-03B_det.dgn