DocuSign Envelope ID: 6F5AC8BF-5B1F-4F48-AD5B-5FD3DD3B1DDB

5/14/99

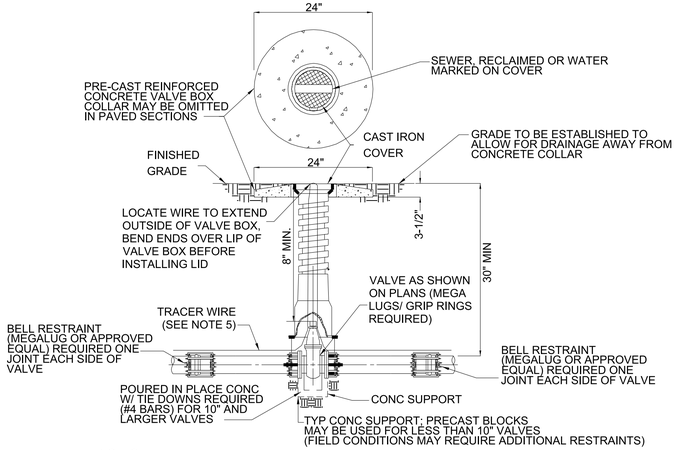

NOTES:

1. TOP OF VALVE BOX AND COLLAR SHALL BE PAINTED GREEN FOR SEWER FM, PURPLE FOR RECLAIMED WATER, AND BLUE FOR WATER.
2. EXTENSION STEM WILL BE REQUIRED TO BE WITHIN 2 FEET OF THE SURFACE IF OPERATING NUT WOULD OTHERWISE BE OVER 5 FEET BELOW GRADE. EXTENSIONS SHALL BE PERMANENTLY ATTACHED TO VALVE NUT AND SHALL BE PROVIDED WITH HORIZONTAL SPACERS FOR VERTICAL ALIGNMENT WITHIN THE VALVE BOX.
3. MINIMUM CLEARANCE TO EXTENSION IS 8".
4. WIRE COLORS REQUIRED: SEWER-GREEN/WATER-BLUE/RECLAIMED WATER-PURPLE OR GREEN WITH PURPLE STRIPE

VALVE BOX
NOT TO SCALE

NOTES:

1. WIRE COLOR REQUIRED:
   a) WATER - BLUE
   b) SEWER - GREEN
   c) RECLAIMED - PURPLE OR GREEN WITH PURPLE STRIPE

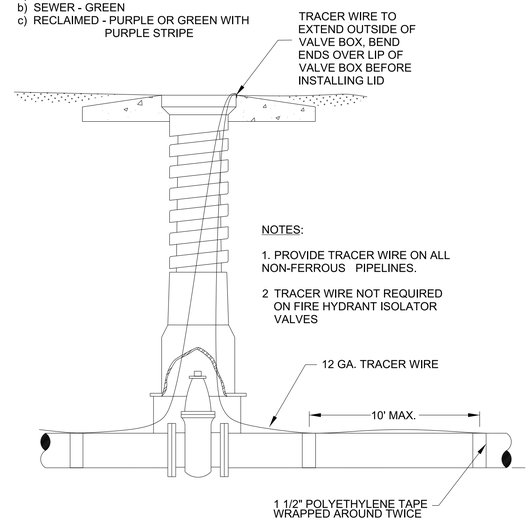

NOTES:

1. PROVIDE TRACER WIRE ON ALL NON-FERROUS PIPELINES.
2. TRACER WIRE NOT REQUIRED ON FIRE HYDRANT ISOLATOR VALVES

TRACER WIRE AT VALVES
NOT TO SCALE

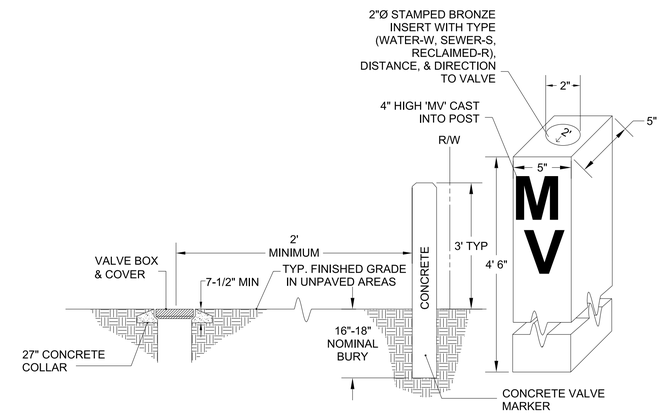

NOTES:

1. VALVE MARKER TO BE INSTALLED UPRIGHT WITH THE CAST 'MV' FACING THE NEAREST STREET.
2. DIRECTION AND DISTANCE MUST BE ETCHED OR STAMPED INTO THE BRONZE INSERT.
3. ONE POST TO BE INSTALLED FOR EACH VALVE LOCATED OUTSIDE OF THE PAVEMENT.
4. VALVE MARKER TO BE INSTALLED AT THE RIGHT OF WAY.
5. NO VALVE MARKER REQUIRED FOR FIRE HYDRANT ISOLATION VALVES.
6. PAINT VALVE MARKER USING STANDARD LOCATING COLORS:
   a) WATER - BLUE
   b) SEWER - GREEN
   c) RECLAIMED - PURPLE

VALVE MARKER IN RIGHT OF WAY
(PAVED)
NOT TO SCALE

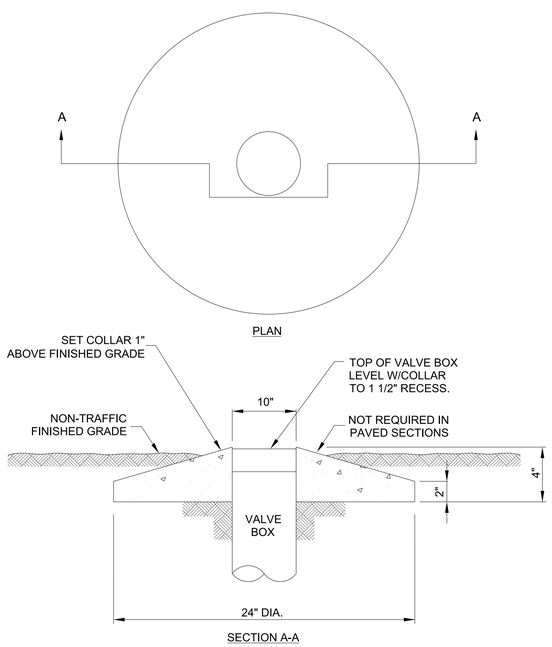

PRECAST CONCRETE VALVE BOX COLLAR
NOT TO SCALE

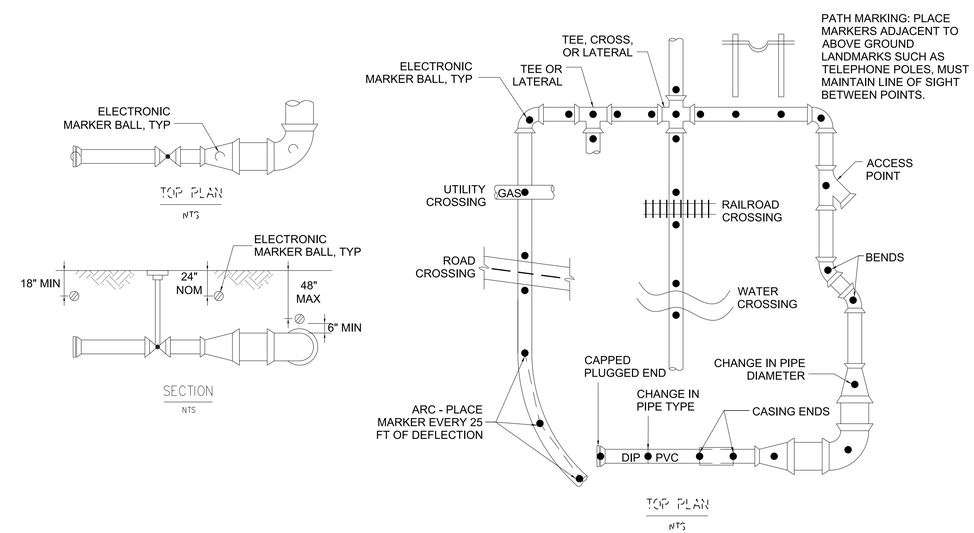

ELECTRONIC MARKER BALL PLACEMENT DETAIL
NOT TO SCALE

PROJECT REFERENCE NO.	SHEET NO.
17BP.3.C.2	UC-3C

DESIGNED BY: SHF
DRAWN BY: SHF
CHECKED BY: KCZ
APPROVED BY: KCZ
REVISED:

NORTH CAROLINA DEPARTMENT OF TRANSPORTATION

UTILITIES ENGINEERING SEC.
PHONE:(919)707-6690
FAX:(919)250-4151

NORTH CAROLINA PROFESSIONAL SEAL 027661 ENGINEER KEVIN C. ZOEB
DocuSigned by: Kevin C. Zoeb
5/21/2018 3:37:08 PM EDT
UTILITY CONSTRUCTION PLANS ONLY

UTILITY CONSTRUCTION

M A Engineering Consultants, Inc.
598 East Chatham Street - Suite 137
Cary, NC 27511
Phone: 919.297.0220 Fax: 919.297.0221
NC License: F-0160

DOCUMENT NOT CONSIDERED FINAL UNTIL ALL SIGNATURES ARE COMPLETED

5/21/2018
R:\JOBS\06996\026\13100 Village Point Rd\UC\Proj\17BP3C2_ut_UC-03C_det.dgn
3:30:54 PM