DocuSign Envelope ID: AB70C30C-A495-417B-A174-5EE5BAEAEEEC

09/08/99

PROJECT: 15403.1065018

CONTRACT: DC00290

See Sheet 1A For Index of Sheets
See Sheet 1B For Conventional Symbols
See Sheet 1C-1 Thru 1C-4 For Survey Control Sheets

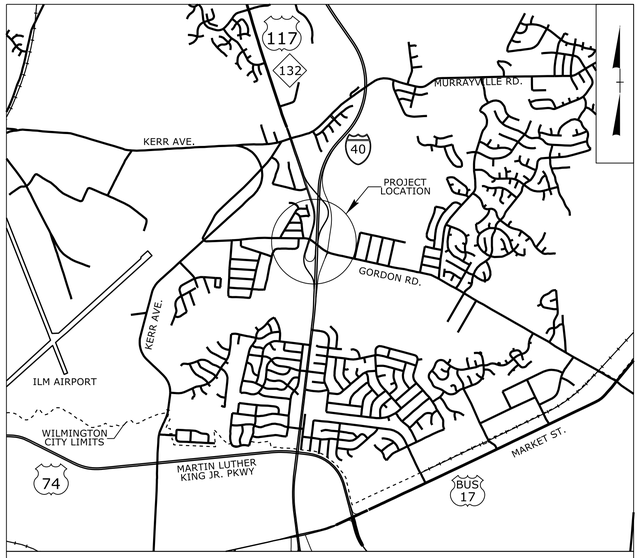

VICINITY MAP

STATE OF NORTH CAROLINA
DIVISION OF HIGHWAYS

NEW HANOVER COUNTY

STATE	STATE PROJECT REFERENCE NO.	SHEET NO.	TOTAL SHEETS
N.C.	15403.1065018	1	

STATE PROJ. NO.	F.A. PROJ. NO.	DESCRIPTION

LOCATION: I-40 AT EXIT 420 (GORDON ROAD /US 117 /NC 132)

TYPE OF WORK: GRADING, DRAINAGE, CULVERT, PAVING, AND STRUCTURE

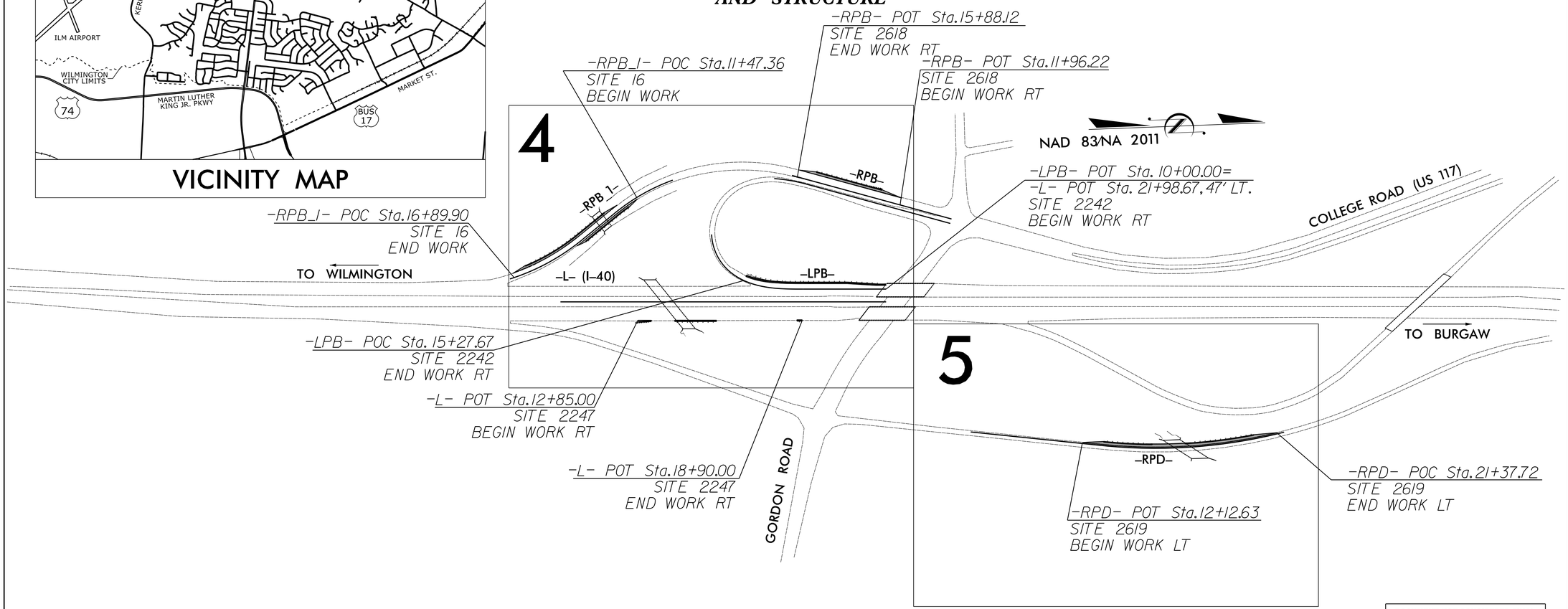

NCDOT CONTACT: KRISTA KIMMEL, PE

DOCUMENT NOT CONSIDERED FINAL UNLESS ALL SIGNATURES COMPLETED

GRAPHIC SCALES

50 25 0 50 100
PLANS

50 25 0 50 100
PROFILE (HORIZONTAL)

10 5 0 10 20
PROFILE (VERTICAL)

DESIGN DATA

ADT 2018 = 30,500
ADT =
K = %
D = %
T = % *
V = MPH
* TTST = DUAL
FUNC CLASS =
INTERSTATE
STATEWIDE TIER

PROJECT LENGTH

LENGTH OF ROADWAY PROJECT 15403.1065018 = 0.115 MILES

TOTAL LENGTH OF PROJECT 15403.1065018 = 0.115 MILES

Prepared for the North Carolina Department of Transportation in the office of:

PLANS PREPARED BY
PARSONS
5540 Centerview Drive, Suite 217
Raleigh, NC 27606
Bus: 919-851-1912 Fax: 919-851-2103
NC LICENSE NO. F-0246
FOR NORTH CAROLINA DEPT. OF TRANSPORTATION

2018 STANDARD SPECIFICATIONS

RIGHT OF WAY DATE:

LETTING DATE:
SEPTEMBER 3, 2020

EDWARD S. ROBBINS, PE
PROJECT ENGINEER

J. MATTHEW PICKENS, PE
PROJECT DESIGN ENGINEER

HYDRAULICS ENGINEER

NORTH CAROLINA PROFESSIONAL SEAL 040843 ENGINEER JIANBIAO LU

7/29/2020

DocuSigned by: Jianbiao Lu
SIGNATURE: P.E.

ROADWAY DESIGN ENGINEER

NORTH CAROLINA PROFESSIONAL SEAL 37950 ENGINEER JASON M. PICKENS

7/29/2020

DocuSigned by: Jason M. Pickens
SIGNATURE: P.E.

STATE OF NORTH CAROLINA DEPARTMENT OF TRANSPORTATION

29-JUL-2020 11:23
J:\I-40_Storm Repairs Group 2\Roadway\Proj\I-40_RDY_TSH_01.dgn
$$$$USERNAME$$$$

DocuSign Envelope ID: 5FA3E329-5949-4263-A1D7-047E8471DD39

8/17/99

PLANS PREPARED BY :
PARSONS
RALEIGH, NORTH CAROLINA, (919) 854-1345
NC LICENSE NO. F-0246
FOR NORTH CAROLINA DEPT. OF TRANSPORTATION

PROJECT REFERENCE NO.	SHEET NO.
I-40	1A

ROADWAY DESIGN ENGINEER
NORTH CAROLINA PROFESSIONAL SEAL 37950 ENGINEER JASON M. WEBB
DocuSigned by: Jason M. Webb
7/31/2020

DOCUMENT NOT CONSIDERED FINAL UNLESS ALL SIGNATURES COMPLETED

INDEX OF SHEETS

SHEET NUMBER	SHEET
1	TITLE SHEET
1A	INDEX OF SHEETS, GENERAL NOTES, AND STANDARD DRAWINGS
1B	CONVENTIONAL SYMBOLS
1C-1 THRU 1C-4	SURVEY CONTROL SHEETS
2A-1	PAVEMENT SCHEDULE AND TYPICAL SECTIONS
2C-1	MODIFIED METHOD III DETAIL
3B-1	ROADWAY SUMMARIES
3D-1 THRU 3D-2	DRAINAGE SUMMARIES
3G-1	GEOTECHNICAL SUMMARIES
4 & 5	PLAN SHEETS
6 & 7	PROFILE SHEETS
TMP-1 THRU TMP-5	TRAFFIC MANAGEMENT PLANS
EC-1 THRU EC-7	EROSION CONTROL PLANS
X-1A THRU X-1B	CROSS-SECTION TITLE & SUMMARY SHEETS
X-1 THRU X-28	CROSS-SECTIONS
S-1 THRU S-8	STRUCTURE PLANS

GENERAL NOTES:

2018 SPECIFICATIONS
EFFECTIVE: 01-16-2018
REVISED:

GRADE LINE:
GRADING AND SURFACING:

THE GRADE LINES SHOWN DENOTE THE FINISHED ELEVATION OF THE PROPOSED SURFACING AT GRADE POINTS SHOWN ON THE TYPICAL SECTIONS. GRADE LINES MAY BE ADJUSTED AT THEIR BEGINNING AND ENDING AND AT STRUCTURES AS DIRECTED BY THE ENGINEER IN ORDER TO SECURE A PROPER TIE-IN.

CLEARING:

CLEARING ON THIS PROJECT SHALL BE PERFORMED TO THE LIMITS ESTABLISHED BY METHOD III MOD.

SHOULDER CONSTRUCTION:

ASPHALT, EARTH, AND CONCRETE SHOULDER CONSTRUCTION ON THE HIGH SIDE OF SUPERELEVATED CURVES SHALL BE IN ACCORDANCE WITH STD. NO. 560.02

GUARDRAIL:

THE GUARDRAIL LOCATIONS SHOWN ON THE PLANS MAY BE ADJUSTED DURING CONSTRUCTION AS DIRECTED BY THE ENGINEER. THE CONTRACTOR SHOULD CONSULT WITH THE ENGINEER PRIOR TO ORDERING GUARDRAIL MATERIAL.

TEMPORARY SHORING:

SHORING REQUIRED FOR THE MAINTENANCE OF TRAFFIC WILL BE PAID FOR AS "EXTRA WORK" IN ACCORDANCE WITH SECTION 104-7.

EFF. 01-16-2018
REV.

2018 ROADWAY ENGLISH STANDARD DRAWINGS

The following Roadway Standards as appear in "Roadway Standard Drawings" Highway Design Branch - N. C. Department of Transportation - Raleigh, N. C., Dated January, 2018 are applicable to this project and by reference hereby are considered a part of these plans:

STD.NO.	TITLE
DIVISION 2 - EARTHWORK	
200.03	Method of Clearing - Modified Method III (See Detail in Lieu of Standard)
225.01	Guide for Grading Subgrade - Interstate and Freeway
275.01	Rock Plating
DIVISION 3 - PIPE CULVERTS	
300.01	Method of Pipe Installation
DIVISION 5 - SUBGRADE, BASES AND SHOULDERS	
560.02	Method of Shoulder Construction - High Side of Superelevated Curve - Method II
DIVISION 8 - INCIDENTALS	
838.21	Reinforced Concrete Endwall - for Single 54" Pipe 90 Skew
840.00	Concrete Base Pad for Drainage Structures
840.18	Concrete Grated Drop Inlet Type 'B' - 12" thru 36" Pipe
840.20	Frames and Wide Slot Flat Grates
840.27	Brick Grated Drop Inlet Type 'B' - 12" thru 36" Pipe
840.66	Drainage Structure Steps
840.72	Pipe Collar
846.01	Concrete Curb, Gutter and Curb & Gutter
846.04	Drop Inlet Installation in Shoulder Berm Gutter
862.01	Guardrail Placement
862.02	Guardrail Installation
862.03	Structure Anchor Units
862.04	Anchoring End of Guardrail - B-77 and B-83 Anchor Units
876.02	Guide for Rip Rap at Pipe Outlets

12/2/2016

PROJECT REFERENCE NO.	SHEET NO.
I-40	1B

STATE OF NORTH CAROLINA, DIVISION OF HIGHWAYS

CONVENTIONAL PLAN SHEET SYMBOLS

Note: Not to Scale

**S.U.E. = Subsurface Utility Engineering*

BOUNDARIES AND PROPERTY:

- State Line
- County Line
- Township Line
- City Line
- Reservation Line
- Property Line
- Existing Iron Pin — EIP
- Computed Property Corner
- Property Monument — ECM
- Parcel/Sequence Number — 123
- Existing Fence Line
- Proposed Woven Wire Fence
- Proposed Chain Link Fence
- Proposed Barbed Wire Fence
- Existing Wetland Boundary — WLB
- Proposed Wetland Boundary — WLB
- Existing Endangered Animal Boundary — EAB
- Existing Endangered Plant Boundary — EPB
- Existing Historic Property Boundary — HPB
- Known Contamination Area: Soil — S
- Potential Contamination Area: Soil — S
- Known Contamination Area: Water — W
- Potential Contamination Area: Water — W
- Contaminated Site: Known or Potential

BUILDINGS AND OTHER CULTURE:

- Gas Pump Vent or U/G Tank Cap
- Sign — S
- Well — W
- Small Mine
- Foundation
- Area Outline
- Cemetery
- Building
- School
- Church
- Dam

HYDROLOGY:

- Stream or Body of Water
- Hydro, Pool or Reservoir
- Jurisdictional Stream — JS
- Buffer Zone 1 — BZ 1
- Buffer Zone 2 — BZ 2
- Flow Arrow
- Disappearing Stream
- Spring
- Wetland
- Proposed Lateral, Tail, Head Ditch — FLOW
- False Sump

RAILROADS:

- Standard Gauge — CSX TRANSPORTATION
- RR Signal Milepost — MILEPOST 35
- Switch — SWITCH
- RR Abandoned
- RR Dismantled

RIGHT OF WAY & PROJECT CONTROL:

- Secondary Horiz and Vert Control Point
- Primary Horiz Control Point
- Primary Horiz and Vert Control Point
- Exist Permanent Easment Pin and Cap
- New Permanent Easement Pin and Cap
- Vertical Benchmark
- Existing Right of Way Marker
- Existing Right of Way Line
- New Right of Way Line — RW
- New Right of Way Line with Pin and Cap — RW
- New Right of Way Line with Concrete or Granite R/W Marker — RW
- New Control of Access Line with Concrete C/A Marker — CA
- Existing Control of Access — CA
- New Control of Access — CA
- Existing Easement Line — E
- New Temporary Construction Easement — E
- New Temporary Drainage Easement — TDE
- New Permanent Drainage Easement — PDE
- New Permanent Drainage / Utility Easement — DUE
- New Permanent Utility Easement — PUE
- New Temporary Utility Easement — TUE
- New Aerial Utility Easement — AUE

ROADS AND RELATED FEATURES:

- Existing Edge of Pavement
- Existing Curb
- Proposed Slope Stakes Cut — C
- Proposed Slope Stakes Fill — F
- Proposed Curb Ramp — CR
- Existing Metal Guardrail
- Proposed Guardrail
- Existing Cable Guiderail
- Proposed Cable Guiderail
- Equality Symbol
- Pavement Removal

VEGETATION:

- Single Tree
- Single Shrub
- Hedge
- Woods Line
- Orchard
- Vineyard — Vineyard

EXISTING STRUCTURES:

MAJOR:

- Bridge, Tunnel or Box Culvert — CONC
- Bridge Wing Wall, Head Wall and End Wall — CONC WW

MINOR:

- Head and End Wall — CONC HW
- Pipe Culvert
- Footbridge
- Drainage Box: Catch Basin, DI or JB — CB
- Paved Ditch Gutter
- Storm Sewer Manhole — S
- Storm Sewer — S

UTILITIES:

POWER:

- Existing Power Pole
- Proposed Power Pole
- Existing Joint Use Pole
- Proposed Joint Use Pole
- Power Manhole — P
- Power Line Tower
- Power Transformer
- U/G Power Cable Hand Hole
- H-Frame Pole
- U/G Power Line LOS B (S.U.E.*) — P
- U/G Power Line LOS C (S.U.E.*) — P
- U/G Power Line LOS D (S.U.E.*) — P

TELEPHONE:

- Existing Telephone Pole
- Proposed Telephone Pole
- Telephone Manhole — T
- Telephone Pedestal — T
- Telephone Cell Tower
- U/G Telephone Cable Hand Hole
- U/G Telephone Cable LOS B (S.U.E.*) — T
- U/G Telephone Cable LOS C (S.U.E.*) — T
- U/G Telephone Cable LOS D (S.U.E.*) — T
- U/G Telephone Conduit LOS B (S.U.E.*) — TC
- U/G Telephone Conduit LOS C (S.U.E.*) — TC
- U/G Telephone Conduit LOS D (S.U.E.*) — TC
- U/G Fiber Optics Cable LOS B (S.U.E.*) — T FO
- U/G Fiber Optics Cable LOS C (S.U.E.*) — T FO
- U/G Fiber Optics Cable LOS D (S.U.E.*) — T FO

WATER:

- Water Manhole — W
- Water Meter
- Water Valve
- Water Hydrant
- U/G Water Line LOS B (S.U.E*) — W
- U/G Water Line LOS C (S.U.E*) — W
- U/G Water Line LOS D (S.U.E*)
- Above Ground Water Line — A/G Water

TV:

- TV Pedestal — C
- TV Tower
- U/G TV Cable Hand Hole — HH
- U/G TV Cable LOS B (S.U.E.*) — TV
- U/G TV Cable LOS C (S.U.E.*) — TV
- U/G TV Cable LOS D (S.U.E.*) — TV
- U/G Fiber Optic Cable LOS B (S.U.E.*) — TV FO
- U/G Fiber Optic Cable LOS C (S.U.E.*) — TV FO
- U/G Fiber Optic Cable LOS D (S.U.E.*) — TV FO

GAS:

- Gas Valve
- Gas Meter
- U/G Gas Line LOS B (S.U.E.*) — G
- U/G Gas Line LOS C (S.U.E.*) — G
- U/G Gas Line LOS D (S.U.E.*) — G
- Above Ground Gas Line — A/G Gas

SANITARY SEWER:

- Sanitary Sewer Manhole
- Sanitary Sewer Cleanout
- U/G Sanitary Sewer Line — SS
- Above Ground Sanitary Sewer — A/G Sanitary Sewer
- SS Forced Main Line LOS B (S.U.E.*) — FSS
- SS Forced Main Line LOS C (S.U.E.*) — FSS
- SS Forced Main Line LOS D (S.U.E.*) — FSS

MISCELLANEOUS:

- Utility Pole
- Utility Pole with Base
- Utility Located Object
- Utility Traffic Signal Box — S
- Utility Unknown U/G Line LOS B (S.U.E.*) — ?UTL
- U/G Tank; Water, Gas, Oil
- Underground Storage Tank, Approx. Loc. — UST
- A/G Tank; Water, Gas, Oil
- Geoenvironmental Boring
- U/G Test Hole LOS A (S.U.E.*)
- Abandoned According to Utility Records — AATUR
- End of Information — E.O.I.

SURVEY CONTROL SHEET

PROJECT REFERENCE NO.	SHEET NO.
SITE 2242 & SITE 2247	1C-1
Location and Surveys	

SEPI
1 Glenwood Avenue
Raleigh, NC 27603
Tel:919.789.9977
Fax:919.789.9591
License: C-2197

BL

POINT	DESC.	NORTH	EAST	ELEVATION
2	2242-2	192975.7502	2341903.3384	20.44
1	2242-1	193662.2069	2341928.4819	36.88

****
BM2247 ELEVATION = 39.60'
N 193873 E 2341964
BL STATION 11+87.00
N 09°31'04.6" E DIST 213.35'
SQUARE CUT IN CONCRETE
****

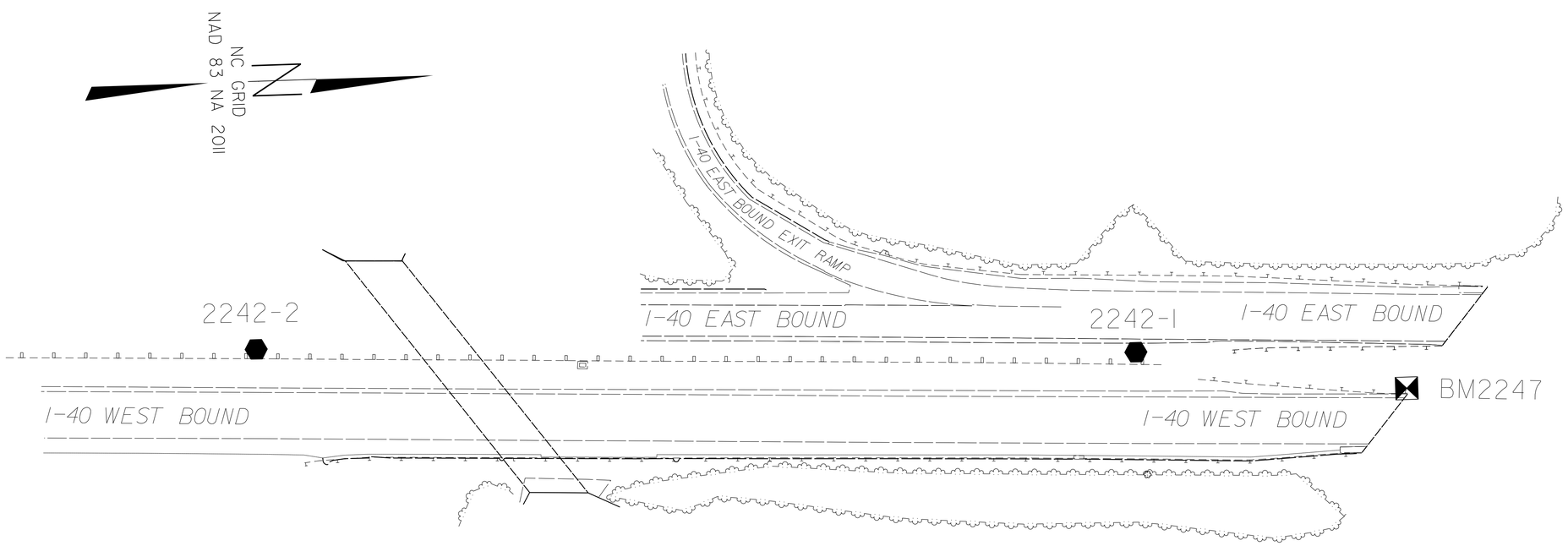

DATUM DESCRIPTION

THE LOCALIZED COORDINATE SYSTEM DEVELOPED FOR THIS PROJECT IS BASED ON THE STATE PLANE COORDINATES ESTABLISHED BY NCGS FOR MONUMENT "DAVID"
WITH NAD 83/NSRS 2011 STATE PLANE GRID COORDINATES OF
NORTHING: 193969.97(ft) EASTING: 2342082.78(ft)
ELEVATION: 18.54(ft)
THE AVERAGE COMBINED GRID FACTOR USED ON THIS PROJECT (GROUND TO GRID) IS: 1.00002081 1/X: 0.99997919

ALL LINEAR DIMENSIONS ARE LOCALIZED HORIZONTAL DISTANCES
VERTICAL DATUM USED IS NAVD 88

NOTES:

1. IF FURTHER INFORMATION REGARDING PROJECT CONTROL IS NEEDED, PLEASE CONTACT THE LOCATION AND SURVEYS UNIT.

2. PROJECT CONTROL WAS ESTABLISHED USING GNSS, THE GLOBAL NAVIGATION SATELLITE SYSTEM.

6/2/99
26-MAY-2020 10:30
r:\hydro\bridge\Repairs Group 2\Roadway\Proj\2242-2247_SEPI_1C-1.dgn
$$$$USERNAME$$$$

SURVEY CONTROL SHEET

PROJECT REFERENCE NO.	SHEET NO.
SITE 2618	1C-2

Location and Surveys

SEPI
1 Glenwood Avenue
Raleigh, NC 27603
Tel:919.789.9977
Fax:919.789.9591
License: C-2197

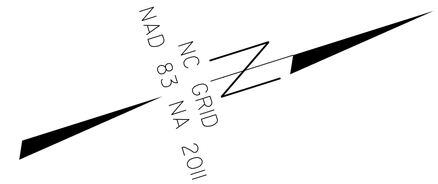

BL

POINT	DESC.	NORTH	EAST	ELEVATION
1	2618-1	193207.7612	2341436.5336	21.03
2	2618-2	193964.4525	2341592.5688	16.35

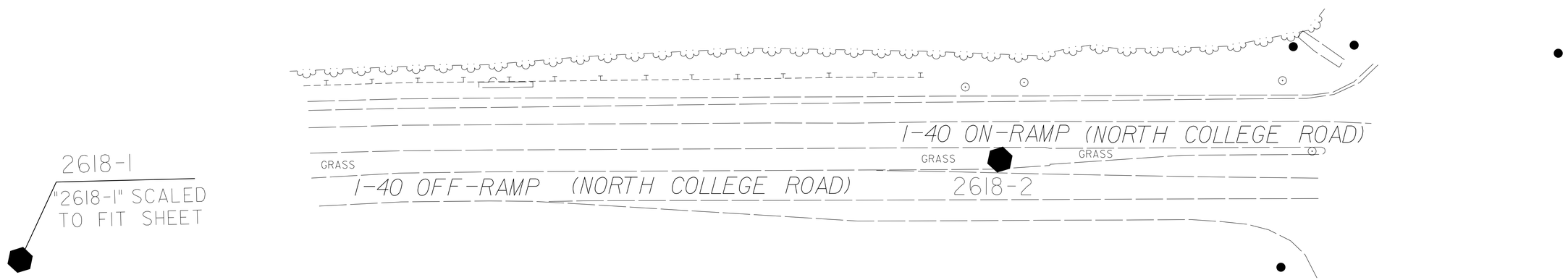

DATUM DESCRIPTION

THE LOCALIZED COORDINATE SYSTEM DEVELOPED FOR THIS PROJECT
IS BASED ON THE STATE PLANE COORDINATES ESTABLISHED BY
NCGS FOR MONUMENT "DAVID"
WITH NAD 83/NSRS 2011 STATE PLANE GRID COORDINATES OF
NORTHING: 193969.97(ft) EASTING: 2342082.78(ft)
ELEVATION: 18.54(ft)
THE AVERAGE COMBINED GRID FACTOR USED ON THIS PROJECT
(GROUND TO GRID) IS: 1.00002081 1/X: 0.99997919

ALL LINEAR DIMENSIONS ARE LOCALIZED HORIZONTAL DISTANCES
VERTICAL DATUM USED IS NAVD 88

NOTES:

1. IF FURTHER INFORMATION REGARDING PROJECT CONTROL IS NEEDED, PLEASE CONTACT THE LOCATION AND SURVEYS UNIT.

2. PROJECT CONTROL WAS ESTABLISHED USING GNSS, THE GLOBAL NAVIGATION SATELLITE SYSTEM.

6/2/99
26-MAY-2020 10:31
I:\10 Sigma Engineers Group 2\Roadway\Proj\2618_SEPI_1C-2.dgn
$$$$USERNAME$$$$

SURVEY CONTROL SHEET

PROJECT REFERENCE NO.	SHEET NO.
SITE 16	1C-3

Location and Surveys

SEPI
1 Glenwood Avenue
Raleigh, NC 27603
Tel:919.789.9977
Fax:919.789.9591
License: C-2197

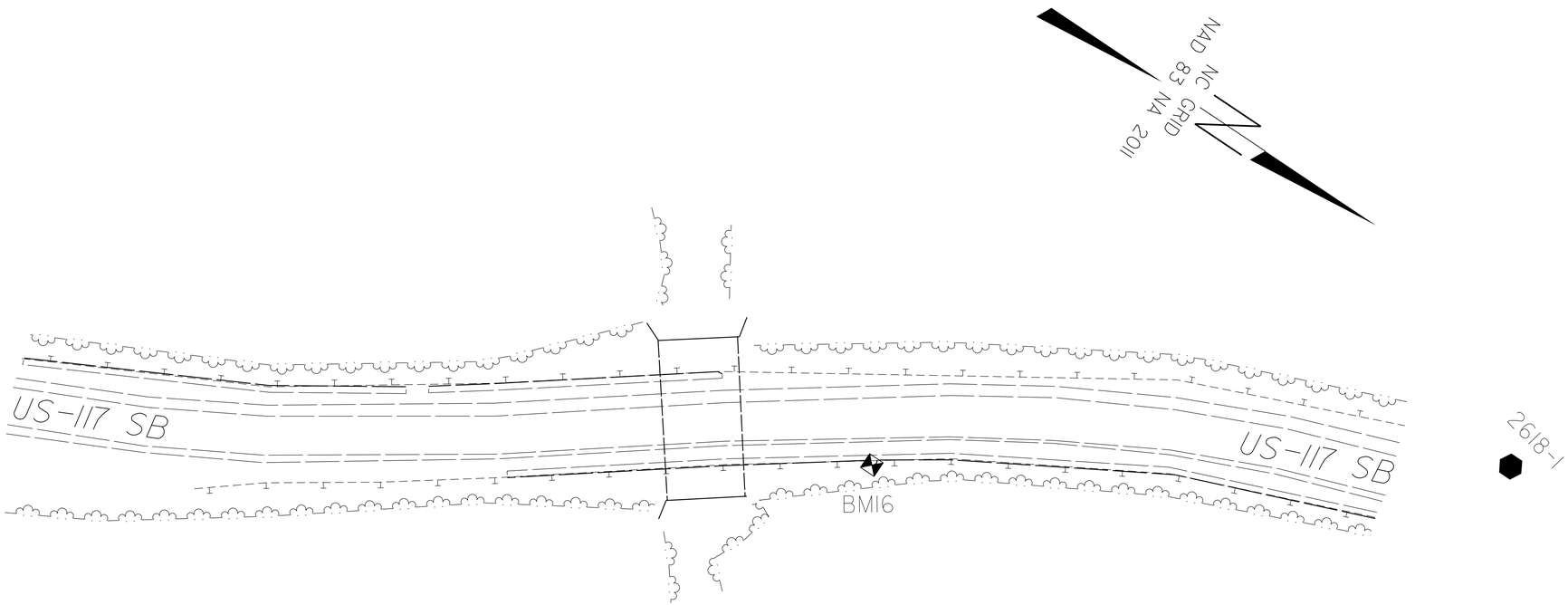

BL

POINT	DESC.	NORTH	EAST	ELEVATION
1	2618-1	193207.7612	2341436.5336	21.03
2	2618-2	193964.4525	2341592.5688	16.35

****
BM16 ELEVATION = 18.71'
N 192975 E 2341592
FROM BL STATION 5+00.00
S 33°41'05.3" E DIST 279.42'
16" SQUARE CUT IN CONCRETE
****

DATUM DESCRIPTION

THE LOCALIZED COORDINATE SYSTEM DEVELOPED FOR THIS PROJECT
IS BASED ON THE STATE PLANE COORDINATES ESTABLISHED BY
NCGS FOR MONUMENT "DAVID"
WITH NAD 83/NSRS 2011 STATE PLANE GRID COORDINATES OF
NORTHING: 193969.97(ft) EASTING: 2342082.78(ft)
ELEVATION: 18.54(ft)
THE AVERAGE COMBINED GRID FACTOR USED ON THIS PROJECT
(GROUND TO GRID) IS: 1.00002081 1/X = 0.99997919

ALL LINEAR DIMENSIONS ARE LOCALIZED HORIZONTAL DISTANCES
VERTICAL DATUM USED IS NAVD 88

NOTES:

1. IF FURTHER INFORMATION REGARDING PROJECT CONTROL IS NEEDED, PLEASE CONTACT THE LOCATION AND SURVEYS UNIT.

2. PROJECT CONTROL WAS ESTABLISHED USING GNSS, THE GLOBAL NAVIGATION SATELLITE SYSTEM.

6/2/99
26-MAY-2020 10:31
r:\Location and Surveys Group 2\Roadway\Proj\16_SEPI_1C-3.dgn
$$$$USERNAME$$$$

SURVEY CONTROL SHEET

PROJECT REFERENCE NO.	SHEET NO.
SITE 2619	1C-4

Location and Surveys

SEPI
1 Glenwood Avenue
Raleigh, NC 27603
Tel:919.789.9977
Fax:919.789.9591
License: C-2197

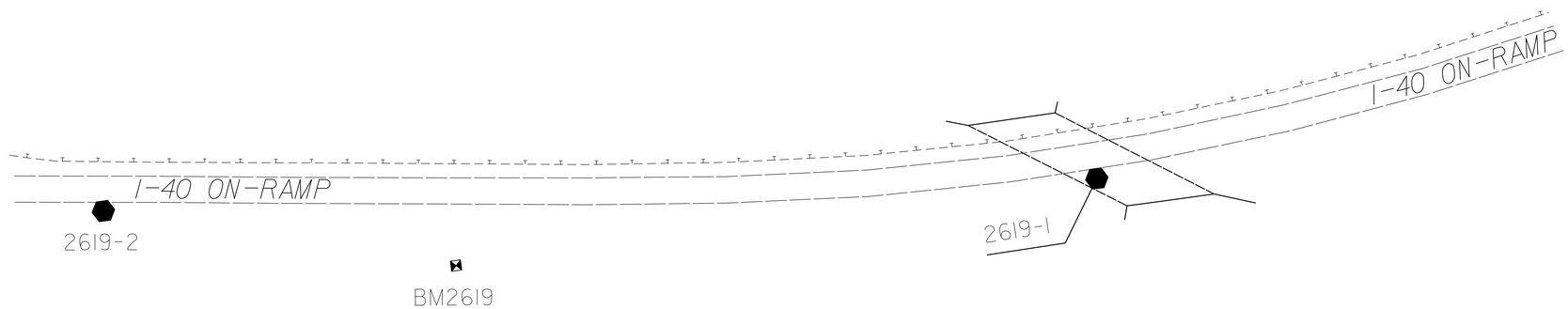

BL

POINT	DESC.	NORTH	EAST	ELEVATION
2	2619-2	194326.2225	2342475.3752	15.72
1	2619-1	195020.1991	2342549.0682	23.29

DATUM DESCRIPTION

THE LOCALIZED COORDINATE SYSTEM DEVELOPED FOR THIS PROJECT IS BASED ON THE STATE PLANE COORDINATES ESTABLISHED BY NCGS FOR MONUMENT "DAVID"
WITH NAD 83/NA 2011 STATE PLANE GRID COORDINATES OF
NORTHING: 193969.97(ft) EASTING: 2342082.78(ft)
ELEVATION: 18.54(ft)
THE AVERAGE COMBINED GRID FACTOR USED ON THIS PROJECT (GROUND TO GRID) IS: 1.00002081 1/X: 0.99997919

ALL LINEAR DIMENSIONS ARE LOCALIZED HORIZONTAL DISTANCES
VERTICAL DATUM USED IS NAVD 88

****
BM2619 ELEVATION = 13.44'
N 194566 E 2342548
BL STATION 7+46.00 46' RIGHT
BENCH TIE SET IN 23" OAK
****

NOTES:

1. IF FURTHER INFORMATION REGARDING PROJECT CONTROL IS NEEDED, PLEASE CONTACT THE LOCATION AND SURVEYS UNIT.

2. PROJECT CONTROL WAS ESTABLISHED USING GNSS, THE GLOBAL NAVIGATION SATELLITE SYSTEM.

6/2/99
26-MAY-2020 10:31
J:\5101_Bridge Repairs Group 2\Roadway\Proj\2619_SEPI_1C-4.dgn
$$$$USERNAME$$$$

DocuSign Envelope ID: 154F9A33-EEEF-46F9-8F64-D549842F6E5C

6/2/99

FINAL PAVEMENT SCHEDULE

CODE	DESCRIPTION
C1	PROP. 2" ASPHALT CONCRETE SURFACE COURSE, TYPE S9.5C, AT AN AVERAGE RATE OF 224 LBS. PER SQ. YD.
E1	PROP. 5" ASPHALT CONCRETE BASE COURSE, TYPE B25.0C, AT AN AVERAGE RATE OF 570 LBS. PER SQ. YD.
J1	PROP. 8" AGGREGATE BASE COURSE
R1	SHOULDER BERM GUTTER
T	EARTH MATERIAL
U	EXISTING PAVEMENT

NOTE: PAVEMENT EDGE SLOPES ARE 1:1 UNLESS SHOWN OTHERWISE.

PLANS PREPARED BY :
PARSONS
RALEIGH, NORTH CAROLINA, (919) 854-1345
NC LICENSE NO. F-0246
FOR NORTH CAROLINA DEPT. OF TRANSPORTATION

PROJECT REFERENCE NO.	SHEET NO.
I-40	2A-1

ROADWAY DESIGN ENGINEER

NORTH CAROLINA PROFESSIONAL SEAL 37950 ENGINEER
DocuSigned by: Simon M. Pickens
E20E24462713411...
8/1/2020

PAVEMENT DESIGN ENGINEER

DOCUMENT NOT CONSIDERED FINAL UNLESS ALL SIGNATURES COMPLETED

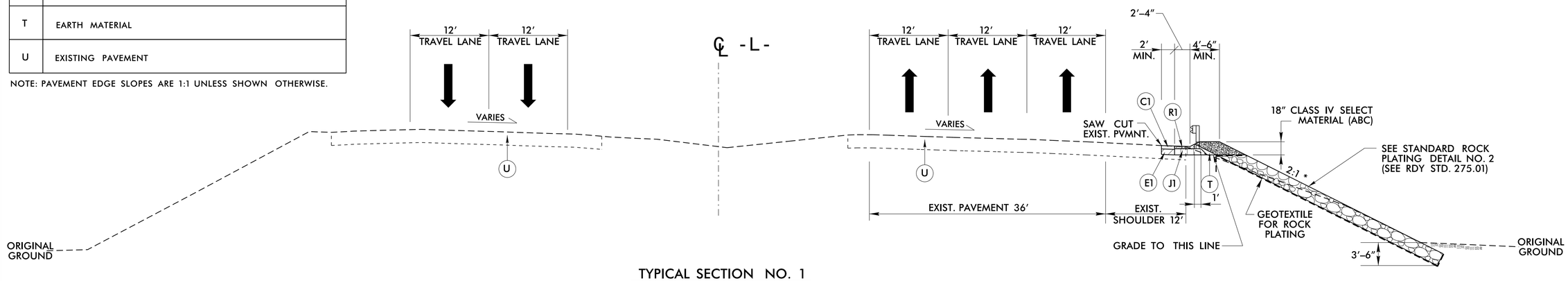

TYPICAL SECTION NO. 1

STA. 12+85.00 -L- RT TO STA. 13+35.00 -L- RT
STA. 14+20.00 -L- RT TO STA. 15+75.00 -L- RT
STA. 18+70.00 -L- RT TO STA. 18+90.00 -L- RT

* DENOTES: 2:1 OR AS SHOWN ON CROSS SECTIONS
* STEEPEN SLOPES ON THE FOLLOWING STATIONS (SEE CROSS SECTIONS):
-L- STA. 14+50 TO 15+25 RT

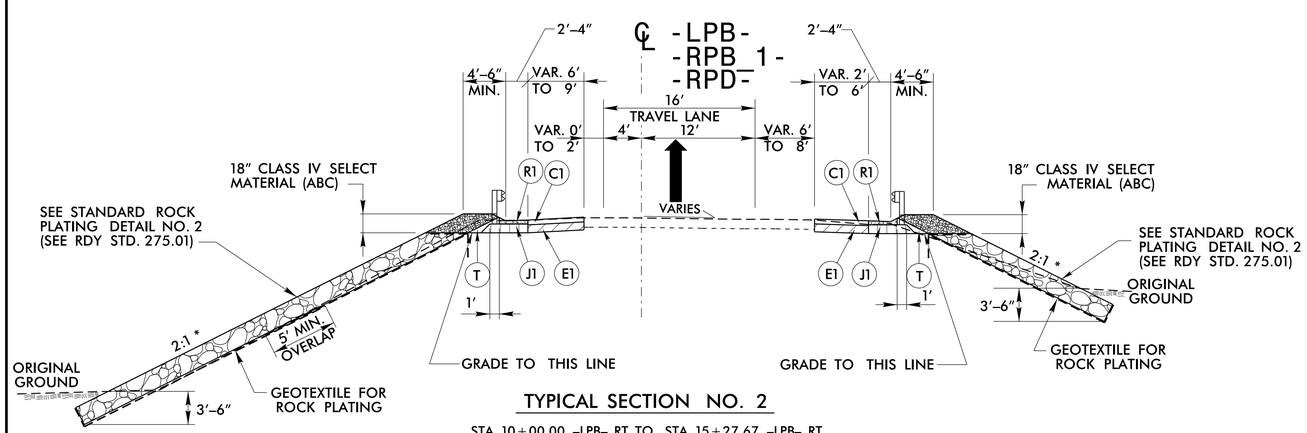

TYPICAL SECTION NO. 2

STA. 10+00.00 -LPB- RT TO STA. 15+27.67 -LPB- RT
STA. 11+90.00 -RPB_1- LT TO STA. 13+95.00 -RPB_1- LT
STA. 12+75.00 -RPB_1- RT TO STA. 16+35.00 -RPB_1- RT
STA. 14+90.00 -RPD- LT TO STA. 20+50.00 -RPD- LT

* DENOTES: 2:1 OR AS SHOWN ON CROSS SECTIONS
* STEEPEN SLOPES ON THE FOLLOWING STATIONS (SEE CROSS SECTIONS):

-RPB_1- STA. 12+50 TO 13+50 LT
-RPB_1- STA. 13+00 TO 13+25 RT
-RPD- STA. 15+50 LT
-RPD- STA. 17+00 TO 17+75 LT

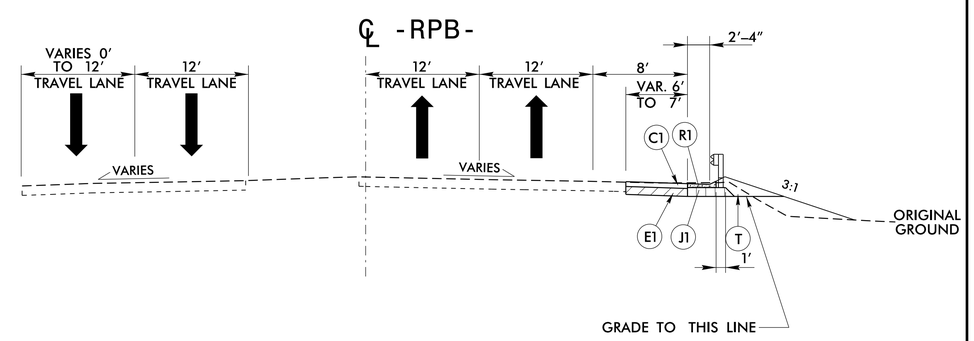

TYPICAL SECTION NO. 3

STA. 12+75.00 -RPB- RT TO STA. 15+25.00 -RPB- RT

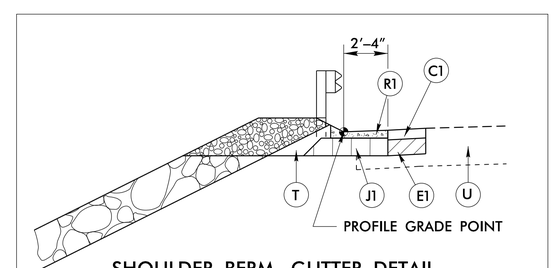

SHOULDER BERM GUTTER DETAIL

31-JUL-2020 16:59
I:\I-40_Corridor\Designers Group 2\Roadway\Proj\I-40_Rdy_typ.dgn
$$$

DocuSign Envelope ID: 557DF9AF-9BEA-4D9B-A7BA-627A578A923A

5/14/99

PROJECT REFERENCE NO.	SHEET NO.
I-40	2C-1

STATE OF
NORTH CAROLINA
DEPT. OF TRANSPORTATION
DIVISION OF HIGHWAYS
RALEIGH, N.C.

ENGLISH DETAIL DRAWING FOR
METHOD OF CLEARING
MODIFIED METHOD - III

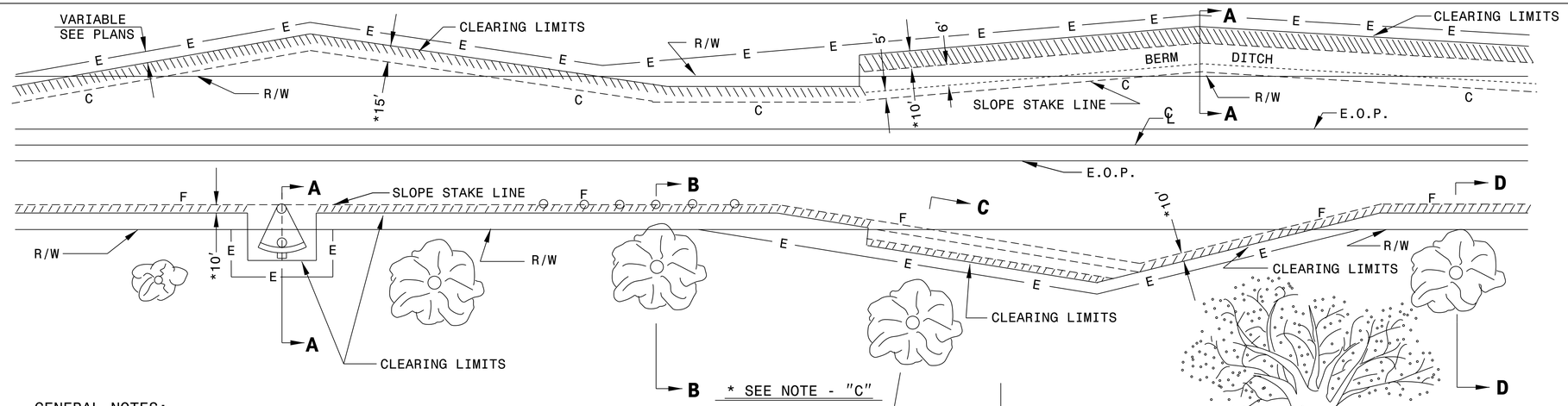

GENERAL NOTES:

1. REMOVE TREES OUTSIDE THE CLEARING LIMIT WHEN, IN THE OPINION OF THE ENGINEER, THE UTILITY OF A TREE WILL BE DESTROYED BY THE CONSTRUCTION OR THE CLEARING OPERATION.
2. CLEAR IN ACCORDANCE WITH THIS STANDARD EXCEPT WHERE ADDITIONAL CLEARING IS REQUIRED FOR SAFETY AS SHOWN ON THE PLANS.

METHOD III CLEARING LIMITS

(A) CUTS -- CLEAR TO CONSTRUCTION LIMITS.
(B) FILLS - CLEAR TO 5'/10' * BEYOND CONSTRUCTION LIMITS, UNLESS SPECIFIED OTHERWISE BY WETLAND PERMIT.
(C) CUTS AND FILLS - WHEN THE CLEARING LIMITS (A AND B) EXCEED THE PROPOSED R/W OR PROPOSED CONSTRUCTION EASEMENTS, THEN CLEAR ONLY TO THE R/W OR CONSTRUCTION EASEMENT WHICHEVER IS GREATER.

* FOR FILL HEIGHTS LESS THAN 10' CLEAR TO 5' BEYOND CONSTRUCTION LIMITS.
* FOR FILL HEIGHTS 10' OR GREATER CLEAR TO 10' BEYOND CONSTRUCTION LIMITS.
** PLACE SILT FENCE AT 5' BEYOND TOE OF SLOPE IN FILL SECTIONS WITH LESS THAN 10'. PLACE SILT FENCE AT 10' BEYOND TOE OF SLOPE IN FILL SECTIONS WITH 10' OR GREATER.

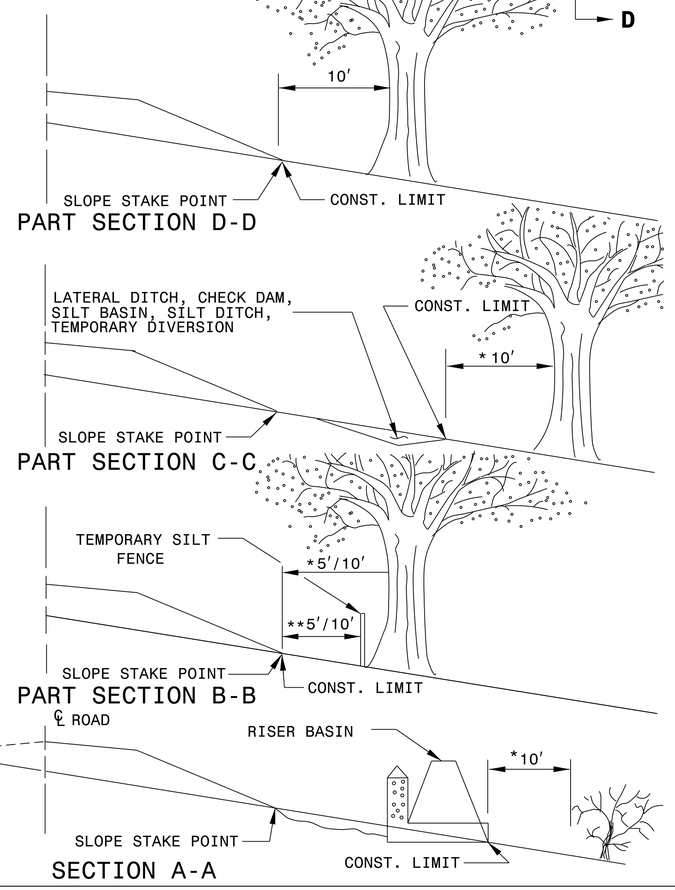

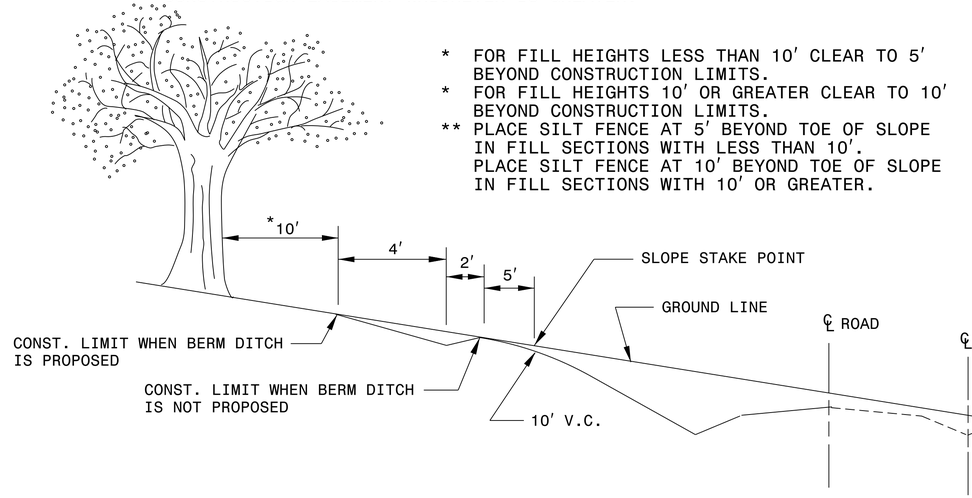

SHEET 1 OF 1
200D03

STATE OF
NORTH CAROLINA
DEPT. OF TRANSPORTATION
DIVISION OF HIGHWAYS
RALEIGH, N.C.

ENGLISH DETAIL DRAWING FOR
METHOD OF CLEARING
MODIFIED METHOD - III

SHEET 1 OF 1
200D03

NORTH CAROLINA PROFESSIONAL SEAL 022966 ENGINEER
DocuSigned by:
6/2/2020

DOCUMENT NOT CONSIDERED FINAL UNLESS ALL SIGNATURES COMPLETED

CONTRACT STANDARDS AND DEVELOPMENT UNIT
Office 919-707-6950 FAX 919-250-4119

SEE TITLE BLOCK

ORIGINAL BY:	T.S.S.	DATE:	FEB.2000
MODIFIED BY:	K.A.K.	DATE:	AUG.2016
CHECKED BY:		DATE:	
FILE SPEC.:	kkempf/english/0200d301.dgn		

05-DEC-2017 (0:3)
S:\Contracts\Special Details\kkempf\english\0200D301_modified method III CandG.dgn
jhoverton
Contracts AT CSD-292595

COMPUTED BY: JMP	DATE: 2-2020
CHECKED BY: DLW	DATE: 2-2020

PLANS PREPARED BY :
PARSONS
RALEIGH, NORTH CAROLINA, (919) 854-1345
NC LICENSE NO. F-0246
FOR NORTH CAROLINA DEPT. OF TRANSPORTATION

PROJECT REFERENCE NO.	SHEET NO.
I-40	3B-1

STATE OF NORTH CAROLINA
DIVISION OF HIGHWAYS

SUMMARY OF EARTHWORK

IN CUBIC YARDS

STATION	STATION	UNCL. EXCAV.	UNDERCUT	EMBANK.	BORROW	WASTE
SITE 2247						
–L– 14+00.00	15+75.00	47		3		44
SITE 2242						
–LPB– 10+25.00	15+50.00	129		113		16
SITE 2618						
–RPB– 12+50.00	15+50.00	73		195	122	
SITE 16						
–RPB_1– 11+75.00	16+00.00	133		115		18
SITE 2619						
–RPD– 14+75.00	20+75.00	284		29		255
PROJECT TOTALS:		666		455	122	333
WASTE IN LIEU OF BORROW					–122	–122
PROJECT TOTAL		666		455		211
GRAND TOTALS:		666				
SAY:		670				

EST. SHOULDER BORROW: 150 CY

Note: Approximate quantities only. Unclassified Excavation, Shoulder Borrow, Fine Grading, Removal of Existing Asphalt Pavement, and Clearing and Grubbing will be paid for at the contract lump sum price for "Grading."

PAVEMENT REMOVAL SUMMARY

SURVEY LINE	STATION	STATION	LOCATION LT/RT	YD^2
–L–	12+85	13+35	RT	11.11
–L–	14+20	15+75	RT	34.44
–L–	18+70	18+90	RT	4.44
–LPB–	10+00	15+28	RT	175.89
–RPB–	11+96	15+88	RT	87.09
–RPB_1–	11+47	14+30	LT	62.90
–RPB_1–	12+22	16+90	RT	103.87
–RPD–	12+13	21+38	LT	205.58
			TOTAL:	685.32
			SAY:	690

"N" = DISTANCE FROM EDGE OF LANE TO FACE OF GUARDRAIL
TOTAL SHOULDER WIDTH = DISTANCE FROM EDGE OF TRAVEL LANE TO SHOULDER BREAK POINT.
FLARE LENGTH = DISTANCE FROM LAST SECTION OF PARALLEL GUARDRAIL TO END OF GUARDRAIL
W = TOTAL WIDTH OF FLARE FROM BEGINNING OF TAPER TO END OF GUARDRAIL

GUARDRAIL SUMMARY

G = GATING IMPACT ATTENUATOR TYPE 350
NG = NON-GATING IMPACT ATTENUATOR TYPE 350

SURVEY LINE	BEG. STA.	END STA.	LOCATION	LENGTH			WARRANT POINT		"N" DIST. FROM E.O.L.	TOTAL SHOUL WIDTH	FLARE LENGTH		W		ANCHORS									IMPACT ATTENUATOR TYPE TL-3		SINGLE FACED CONCRETE BARRIER	REMOVE EXISTING GUARDRAIL	REMOVE & STOCKPILE EXISTING GUARDRAIL	REMOVE & RESET EXISTING GUARDRAIL	REMARKS
				STRAIGHT	SHOP CURVED	DOUBLE FACED	APPROACH END	TRAILING END			APPROACH END	TRAILING END	APPROACH END	TRAILING END	TES	XI	GREU, TL-3	M-350	XIII	CAT-1	VI MOD	B-77	III	G	NG					
-L-	12+76.01	13+25.91	RT	50.00			15+00		13	16	50		1				1										50			TIE TO EXISTING GR
-L-	14+20.00	15+75.00	RT	162.50					13	16																	162.5			TIE TO EXISTING GR
-L-	18+70.00	18+90.00	RT	25					13	16																	25			TIE TO EXISTING GR
-LPB-	10+00.00	15+27.67	RT	518.75					12	15												1					518.75			TIE TO EXISTING GR
-RPB-	12+75.00	15+25.00	RT	250			14+00		12	15	50		1				1										250			TIE TO EXISTING GR
-RPB_1-	11+90.00	13+95.00	LT	206.25					10	13																	187.5			TIE TO EXISTING GR
-RPB_1-	12+75.00	16+35.00	RT	356.25					13	16										1							343.75			TIE TO EXISTING GR
-RPD-	14+90.00	16+70.97	LT	175					11	14												1					275			TIE TO EXISTING GR
-RPD-	17+91.94	20+50.00	LT	256.25					11	14												1					275			TIE TO EXISTING GR
TOTAL				2000.00																										
	LESS ANCHOR DEDUCTIONS																													
	GREU, TL-3	2 @ 50.00'	=	100																										
	B-77	3 @ 18.75'	=	56.25																										
	CAT-1	1 @ 6.25'	=	6.25																										
		TOTAL DEDUCTIONS		162.5																										
TOTAL				1837.50													2			1		3					2087.5			
			SAY	**1850**				**Additional Guardrail Posts: 5 EA**									**2**			**1**		**3**					**2100**			

5/28/99
07-AUG-2020 08:45
s:\Roadway\Proj\I-40_RDY_SUM_3B-1.dgn
$$$$USERNAME$$$$

6XVKMT2

COMPUTED BY:	JL	DATE:	2/10/2020
CHECKED BY:	JMP	DATE:	2/10/2020

NORTH CAROLINA DEPARTMENT OF TRANSPORTATION
DIVISION OF HIGHWAYS

PROJECT NO.	SHEET NO.
I-40 Storm Repairs Group 2	3D-1

Note: Invert Elevations indicated are for Bid Purposes only and shall not be used for project construction stakeout. See "Standard Specifications For Roads and Structures, Section 300-5".

LIST OF PIPES, ENDWALLS, ETC. (FOR PIPES 48 INCHES & UNDER)

| LINE & STATION / SIZE / THICKNESS OR GAUGE | OFFSET | STRUCTURE NUMBER FROM | STRUCTURE NUMBER TO | TOP ELEVATION FT. | INVERT ELEVATION FT. | INVERT ELEVATION FT. | MINIMUM REQUIRED SLOPE % | Side Drain Pipe (RCP, CSP, CAAP, HDPE, or PVC) 12 | 15 | | DO NOT USE RCP | DO NOT USE CSP | DO NOT USE CAAP | DO NOT USE HDPE | DO NOT USE PVC | C. A. A. PIPE 12 .064 | 15 .064 | 18 .064 | 24 .064 | | R. C. PIPE CLASS III 12 | 15 | 18 | 24 | | R. C. PIPE CLASS IV 12 | 15 | 18 | 24 | | ENDWALLS STD. 838.01 OR STD. 838.11 (UNLESS NOTED OTHERWISE) CY | REINFORCED ENDWALLS CY | DRAINAGE STRUCTURE MASONRY CY | QUANTITIES FOR DRAINAGE STRUCTURES (NOTE: TOTAL LIN. FT. FOR PAY QUANTITY SHALL BE A + (1.3 X B)) 0' THRU 5' EACH | A 5' THRU 10' LIN. FT. | B 10' AND ABOVE LIN. FT. | C.B. STD. 840.01 OR STD. 840.02 | FRAME, GRATES, AND HOOD STD. 840.03 GRATE TYPE E | F | G | CONCRETE TRANSITIONAL SECTION D.I. STD. 852.04 OR STD. 852.06 | C.B. STD. 852.05 | OPEN THROAT C.B. STD. 840.04 OR STD. 840.05 | CONCRETE BRIDGE APPROACH D.I. STD. 840.13 | D.I. STD. 840.14 OR STD. 840.15 | D.I. FRAME AND GRATES STD. 840.16 | G.D.I. TYPE "A" STD. 840.17 OR STD. 840.26 | G.D.I. TYPE "B" STD. 840.18 OR STD. 840.27 | G.D.I. TYPE "D" STD. 840.19 OR STD. 840.28 | G.D.I. (W.S. FLAT) FRAME WITH GRATE STD. 840.20 | G.D.I. (W.S. FLAT) FRAME W/ 2 GRATES STD. 840.20 | G.D.I. (W.S. SAG) FRAME W/ 2 GRATES STD. 840.22 | G.D.I. (N.S. SAG) FRAME W/ 2 GRATES STD. 840.24 | G.D.I. (N.S. FLAT) FRAME W/ GRATE STD. 840.29 | G.D.I. (N.S. FLAT) FRAME W/ 2 GRATES STD. 840.29 | DRIVEWAY D.I. STD. 840.30 | FRAME W/ GRATE FOR DRIVEWAY STD. 840.30 | J.B. STD. 840.31 OR STD. 840.32 | ANGLED VANE GRATES AND FRAMES STD. 840.33 | T.B.J.B. STD. 840.34 | T.B.D.I. STD. 840.35 | T.B.D.I. FOR STEEL GRATES STD. 840.36 | STEEL FRAME WITH TWO GRATES STD. 840.37 | TEMP STEEL PLATE COVER MASONRY DRAINAGE | 15" C.A.A. ELBOW | 18" C.A.A. ELBOW | 24" C.A.A. ELBOW | 30" C.A.A. ELBOW | 36" C.A.A. ELBOW | BERM DITCH OUTLET STD. 850.10 (PER EACH) | BERM DITCH OUTLET STD. 850.11 (PER EACH) | MODIFIED CONC. FLUME | PREFORMED SCOUR HOLE (PER EACH) | ENERGY DISSIPATION BASIN | FLOWABLE FILL CY | CONCRETE COLLARS CL. "B" STD. 840.72 CY | CONCRETE AND BRICK PIPE PLUG STD. 840.71 CY | PIPE REMOVAL LIN. FT. | REMARKS |
|---|---|---|---

6XVKMT2

COMPUTED BY:	JL	DATE:	2/10/2020
CHECKED BY:	JMP	DATE:	2/10/2020

NORTH CAROLINA DEPARTMENT OF TRANSPORTATION
DIVISION OF HIGHWAYS

PROJECT NO.	SHEET NO.
I-40 Storm Repairs Group 2	3D-2

Note: Invert Elevations indicated are for Bid Purposes only and shall not be used for project construction stakeout. See "Standard Specifications For Roads and Structures, Section 300-5".

LIST OF PIPES, ENDWALLS, ETC. (FOR PIPES 54 INCHES & OVER)

| LINE & STATION / SIZE / THICKNESS OR GAUGE | OFFSET | STRUCTURE NUMBER FROM | STRUCTURE NUMBER TO | TOP ELEVATION FT. | INVERT ELEVATION FT. | INVERT ELEVATION FT. | MINIMUM REQUIRED SLOPE % | Side Drain Pipe (RCP, CSP, CAAP, HDPE, or PVC) 12 | 15 | | DO NOT USE RCP | DO NOT USE CSP | DO NOT USE CAAP | DO NOT USE HDPE | DO NOT USE PVC | C. A. A. PIPE 12 .064 | 15 .064 | 18 .064 | 24 .064 | | R. C. PIPE CLASS III 12 | 15 | 18 | 24 | 30 | 36 | 42 | 48 | 54 | 60 | 66 | 72 | 78 | 84 | | ENDWALLS STD. 838.01 OR STD. 838.11 (UNLESS NOTED OTHERWISE) CY | REINFORCED ENDWALLS STD. 838.21 CY | DRAINAGE STRUCTURE MASONRY CY | QUANTITIES FOR DRAINAGE STRUCTURES (NOTE: TOTAL LIN. FT. FOR PAY QUANTITY SHALL BE A + (1.3 X B)) 0' THRU 5' EACH | A 5' THRU 10' LIN. FT. | B 10' AND ABOVE LIN. FT. | C.B. STD. 840.01 OR STD. 840.02 | FRAME, GRATES, AND HOOD STD. 840.03 GRATE TYPE E | F | G | CONCRETE TRANSITIONAL SECTION D.I. STD. 852.06 OR STD. 852.04 | C.B. STD. 852.05 | OPEN THROAT C.B. STD. 840.04 OR STD. 840.05 | CONCRETE BRIDGE APPROACH D.I. STD. 840.13 | D.I. STD. 840.14 OR STD. 840.15 | D.I. FRAME AND GRATES STD. 840.16 | G.D.I. TYPE "A" STD. 840.17 OR STD. 840.26 | G.D.I. TYPE "B" STD. 840.18 OR STD. 840.27 | G.D.I. TYPE "D" STD. 840.19 OR STD. 840.28 | G.D.I. (W.S. FLAT) FRAME WITH GRATE STD. 840.20 | G.D.I. (W.S. FLAT) FRAME W/ 2 GRATES STD. 840.26 | G.D.I. (W.S. SAG) FRAME W/ GRATE STD. 840.22 | G.D.I. (W.S. SAG) FRAME W/ 2 GRATES STD. 840.22 | G.D.I. (N.S. SAG) FRAME W/ GRATE STD. 840.24 | G.D.I. (N.S. SAG) FRAME W/ 2 GRATES STD. 840.24 | G.D.I. (N.S. FLAT) FRAME W/ GRATE STD. 840.29 | G.D.I. (N.S. FLAT) FRAME W/ 2 GRATES STD. 840.29 | DRIVEWAY D.I. STD. 840.30 | | | 15" C.A.A. ELBOW | 18" C.A.A. ELBOW | 24" C.A.A. ELBOW | 30" C.A.A. ELBOW | 36" C.A.A. ELBOW | | BERM DITCH OUTLET STD. 850.10 (PER EACH) | BERM DITCH OUTLET STD. 850.11 (PER EACH) | | MODIFIED CONC. FLUME | PREFORMED SCOUR HOLE (PER EACH) | ENERGY DISSIPATION BASIN | | FLOWABLE FILL CY | CONCRETE COLLARS CL. "B" STD. 840.72 CY | CONCRETE AND BRICK PIPE PLUG STD. 840.71 CY | PIPE REMOVAL LIN. FT. | REMARKS |
|---|---|---|---

STATE OF NORTH CAROLINA
DIVISION OF HIGHWAYS

SUMMARY OF ROCK PLATING

LINE	Beginning Slope (H:V)	Approx. Station	Ending Slope (H:V)	Approx. Station	Location LT/RT	Rock Plating Detail No. 1/2/3/4	Riprap Class* 1/2/B	Rock Plating SY
-L-	2:1	14+25	2:1	15+50	RT	2		340
-LPB-	2:1	12+00	2:1	15+28	RT	2		1430
-RPB_1-	2:1	12+75	2:1	16+25	RT	2		592
-RPB_1-	2:1	12+25	2:1	13+89	LT	2		318
-RPD-	2:1	15+00	2:1	15+75	LT	2		125
-RPD-	2:1	16+71	2:1	18+00	LT	2		225
							TOTAL SY:	3030

***Use Class 1, 2 or B riprap if riprap class is not shown for rock plating location.**

30-JUL-2020 12:35
s:\Hydraulics\Roadways Group 2\Roadway\Proj\I-40_RDY_SUM_3G-1.dgn
$$USERNAME$$

DocuSign Envelope ID: 2D38524E-85F8-4EB2-BA3E-F52011BE4010

8/17/99

PLANS PREPARED BY :
PARSONS
RALEIGH, NORTH CAROLINA, (919) 854-1345
NC LICENSE NO. F-0246
FOR NORTH CAROLINA DEPT. OF TRANSPORTATION

PROJECT REFERENCE NO.	SHEET NO.
I-40	4
R/W SHEET NO.	

ROADWAY DESIGN ENGINEER: NORTH CAROLINA PROFESSIONAL SEAL 37950 ENGINEER — 7/31/2020

HYDRAULICS ENGINEER: NORTH CAROLINA PROFESSIONAL SEAL 040843 ENGINEER — 7/31/2020

DOCUMENT NOT CONSIDERED FINAL UNLESS ALL SIGNATURES COMPLETED

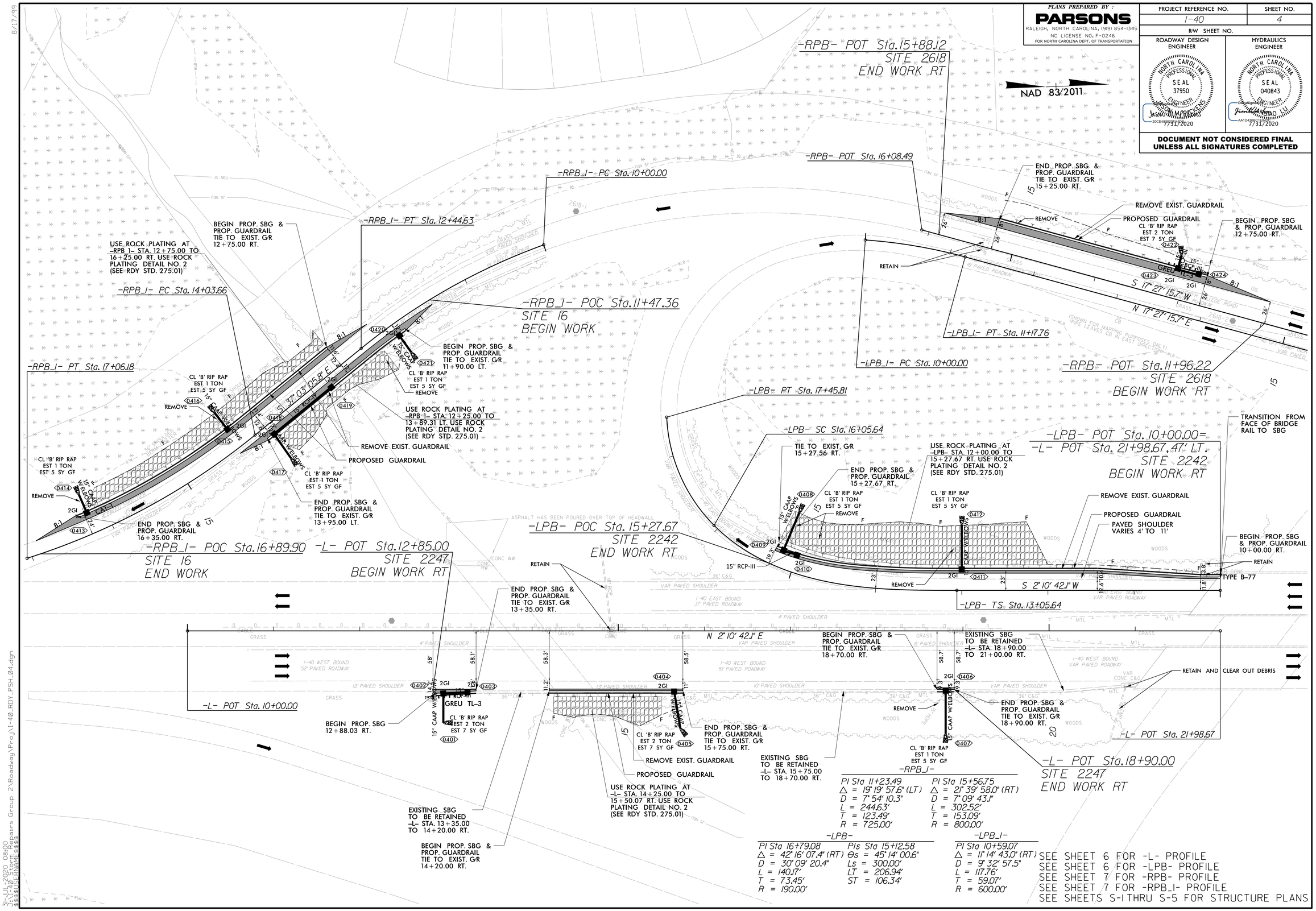

SEE SHEET 6 FOR -L- PROFILE
SEE SHEET 6 FOR -LPB- PROFILE
SEE SHEET 7 FOR -RPB- PROFILE
SEE SHEET 7 FOR -RPB_1- PROFILE
SEE SHEETS S-1 THRU S-5 FOR STRUCTURE PLANS

31-JUL-2020 08:00
s:\Transportation\Design\Projects\Parsons Group 2\Roadway\Proj\I-40_RDY_PSH_04.dgn

DocuSign Envelope ID: 2D38524E-85F8-4EB2-BA3E-F52011BE4010

8/17/99

PLANS PREPARED BY :
PARSONS
RALEIGH, NORTH CAROLINA, (919) 854-1345
NC LICENSE NO. F-0246
FOR NORTH CAROLINA DEPT. OF TRANSPORTATION

PROJECT REFERENCE NO.	SHEET NO.
I-40	5
R/W SHEET NO.	

ROADWAY DESIGN ENGINEER
NORTH CAROLINA PROFESSIONAL SEAL 37950 ENGINEER
DocuSigned by: Jason Nicholson
20CE483020F4444...
7/31/2020

HYDRAULICS ENGINEER
NORTH CAROLINA PROFESSIONAL SEAL 040843 ENGINEER
DocuSigned by: Jian Shiao Liu
AA1D438B5C1E4B1...
7/31/2020

DOCUMENT NOT CONSIDERED FINAL UNLESS ALL SIGNATURES COMPLETED

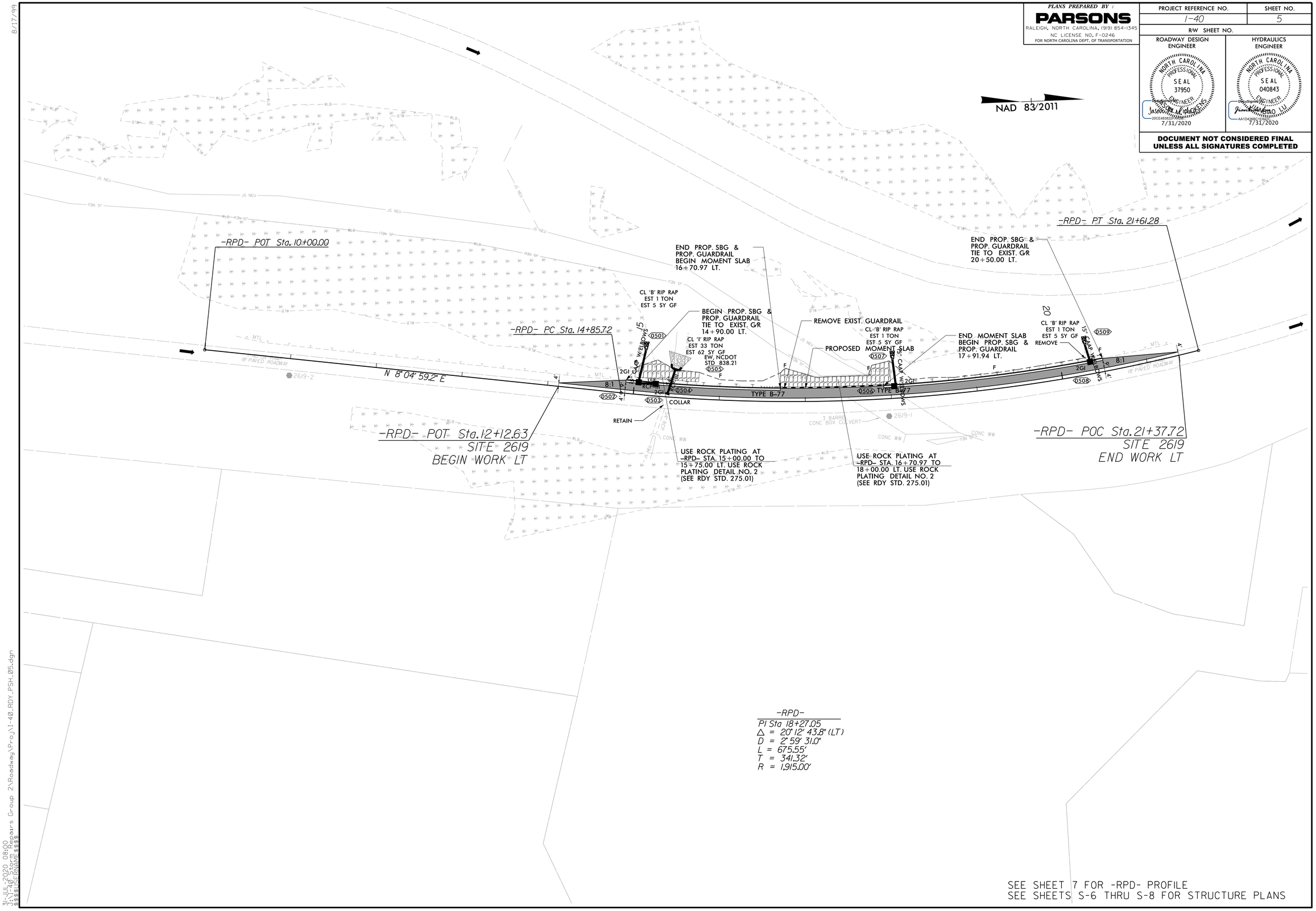

SEE SHEET 7 FOR -RPD- PROFILE
SEE SHEETS S-6 THRU S-8 FOR STRUCTURE PLANS

31-JUL-2020 08:00
I-40_Storm Repairs Group 2\Roadway\Proj\I-40_RDY_PSH_05.dgn

DocuSign Envelope ID: 557DF9AF-9BEA-4D9B-A7BA-627A578A923A

5/28/99

PLANS PREPARED BY :
PARSONS
RALEIGH, NORTH CAROLINA, (919) 854-1345
NC LICENSE NO. F-0246
FOR NORTH CAROLINA DEPT. OF TRANSPORTATION

PROJECT REFERENCE NO.	SHEET NO.
I-40	6

ROADWAY DESIGN ENGINEER
NORTH CAROLINA PROFESSIONAL SEAL 37950 ENGINEER
JASON M. BRACKINS
DocuSign Envelope ID: 14D4A9A0-2DCE-4A38-B22F-A4E8B...
5/27/2020

HYDRAULICS ENGINEER
NORTH CAROLINA PROFESSIONAL SEAL 040843 ENGINEER
JIANHENG LU
DocuSign Envelope ID: 1A4D4398-AA1D-4398-B1F...
5/27/2020

DOCUMENT NOT CONSIDERED FINAL UNLESS ALL SIGNATURES COMPLETED

-L-

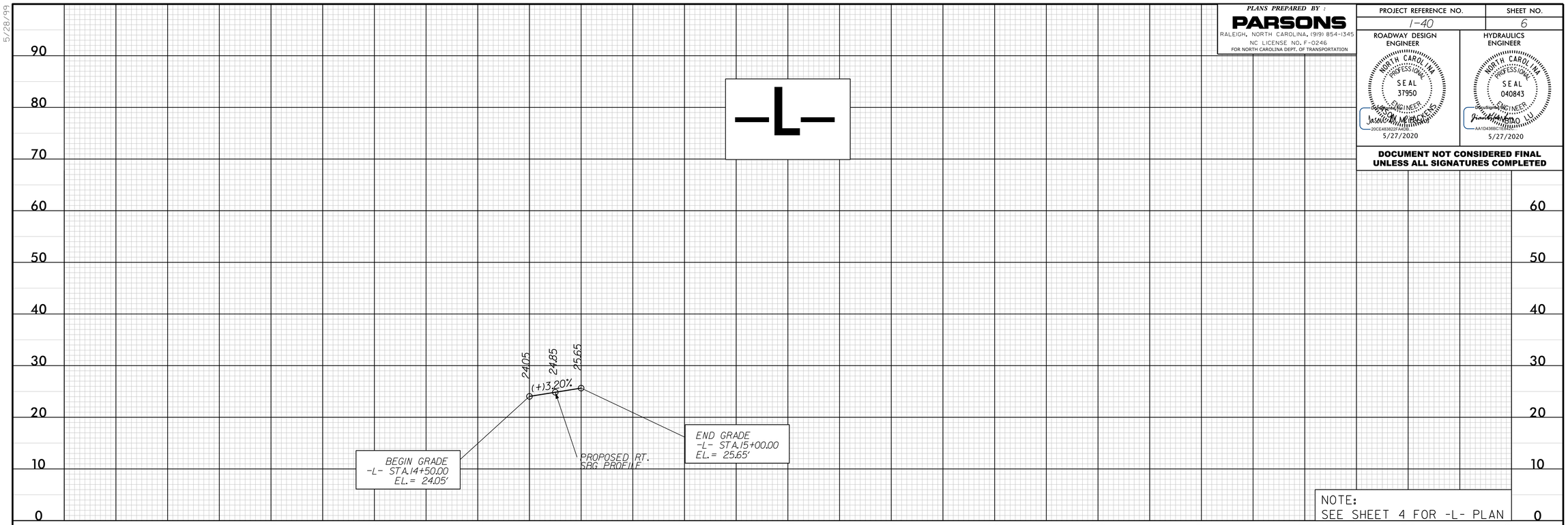

NOTE:
SEE SHEET 4 FOR -L- PLAN

-LPB-

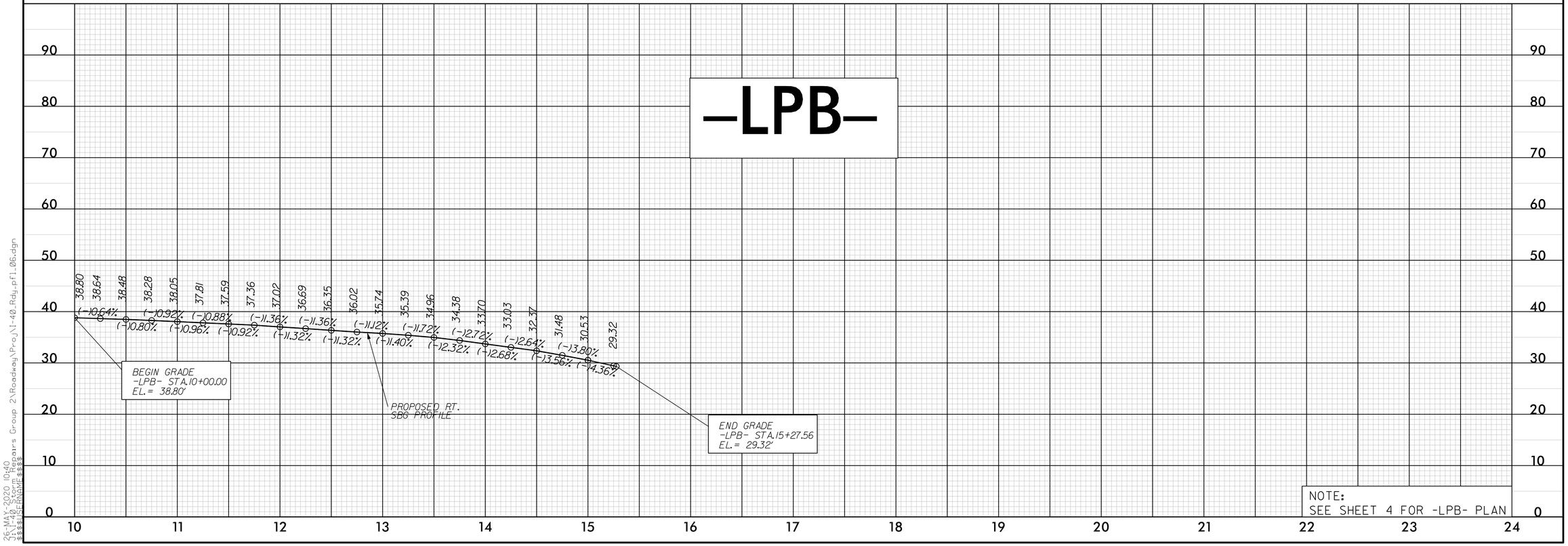

NOTE:
SEE SHEET 4 FOR -LPB- PLAN

26-MAY-2020 10:40
s:\pwi\projects\ncdot\ncdot\Parsons Group 2\Roadway\Proj\I-40_Rdy_pfl_06.dgn
$$$$USERNAME$$$$

DocuSign Envelope ID: 557DF9AF-9BEA-4D9B-A7BA-627A578A923A

PLANS PREPARED BY :
PARSONS
RALEIGH, NORTH CAROLINA, (919) 854-1345
NC LICENSE NO. F-0246
FOR NORTH CAROLINA DEPT. OF TRANSPORTATION

PROJECT REFERENCE NO.	SHEET NO.
I-40	7

ROADWAY DESIGN ENGINEER
NORTH CAROLINA PROFESSIONAL SEAL 37950 ENGINEER
DocuSigned by: JASON M. PRICKETT
20CE4C2F2F2F2F2...
5/27/2020

HYDRAULICS ENGINEER
NORTH CAROLINA PROFESSIONAL SEAL 040843 ENGINEER
DocuSigned by: JIANMING LU
AA1E1F2F2F2F2F2...
5/27/2020

DOCUMENT NOT CONSIDERED FINAL UNLESS ALL SIGNATURES COMPLETED

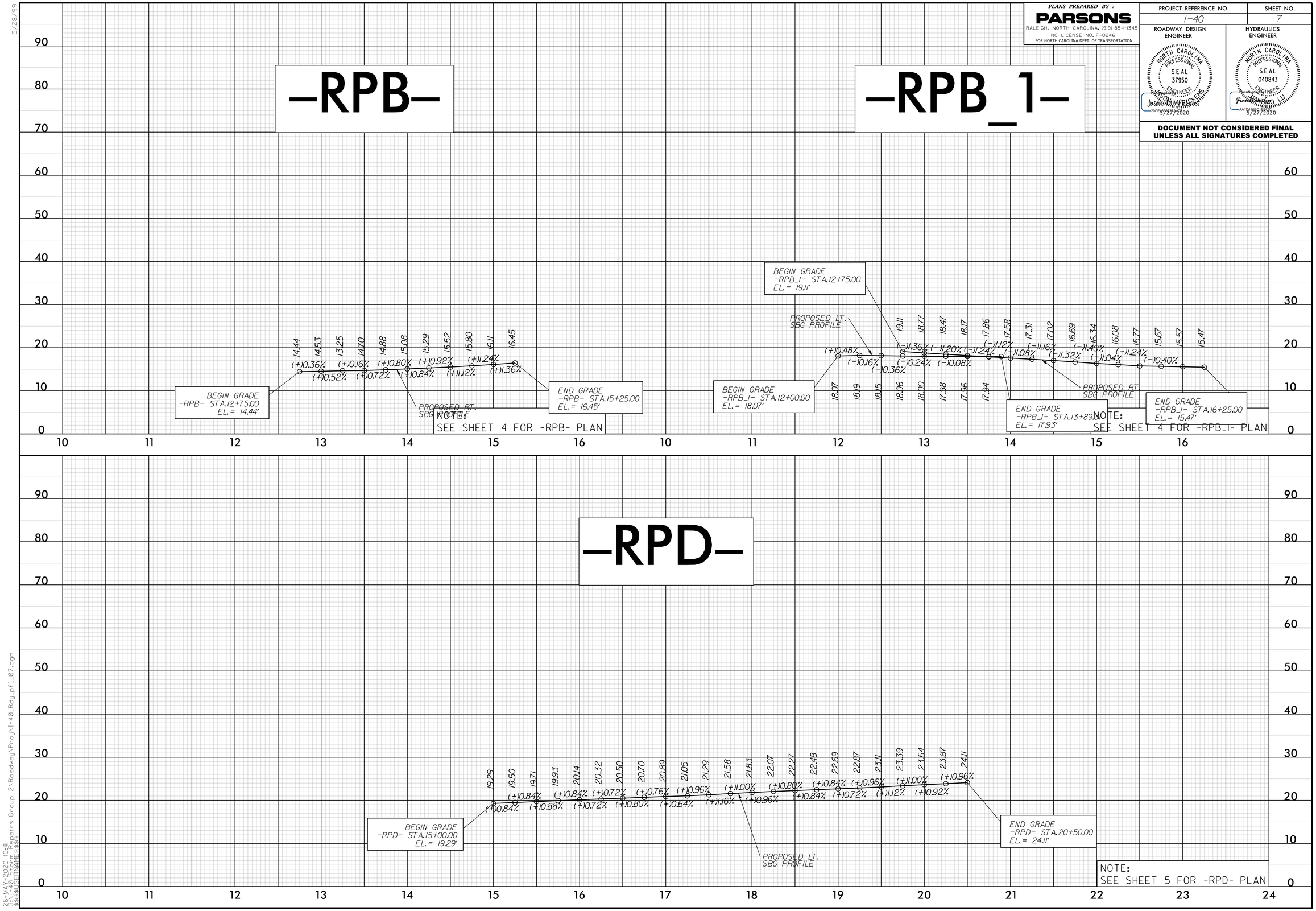

5/28/99
26-MAY-2020 10:41
$$$$USERNAME$$$$
$$$$PROJECT$$$$
$$$$MODEL$$$$
$$$$LAYOUT$$$$
$$$$PLOTDATE$$$$
$$$$PLOTTER$$$$
$$$$PENTABLE$$$$
$$$$PAGESETUP$$$$
$$$$USERNAME$$$$
C:\Users\sbarrs Group 2\Roadway\Proj\I-40_Rdy_pfl_07.dgn

DocuSign Envelope ID: 6F6787DB-0ED0-4FCF-A55D-390A753417BC

STATE OF NORTH CAROLINA
DIVISION OF HIGHWAYS

TRANSPORTATION MANAGEMENT PLAN

NEW HANOVER COUNTY

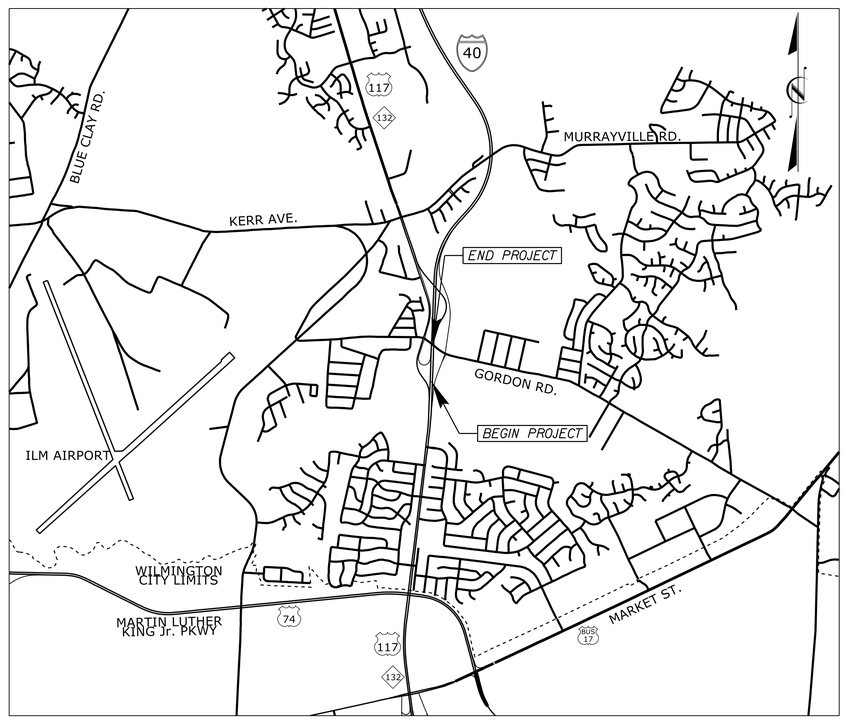

INDEX OF SHEETS

SHEET NO.	TITLE
TMP-1	TITLE SHEET, VICINITY MAP AND INDEX OF SHEETS
TMP-1A	LIST OF APPLICABLE ROADWAY STANDARD DRAWINGS, AND LEGEND
TMP-1B	TRANSPORTATION OPERATIONS PLAN: GENERAL NOTES
TMP-2 THRU TMP-2B	DETOUR DETAIL SHEETS
TMP-3	PHASING
TMP-4 & TMP-5	PHASE 1 DETAIL SHEETS

SHEET NO.
TMP-1

TIP PROJECT:

DOCUMENT NOT CONSIDERED FINAL UNLESS ALL SIGNATURES COMPLETED

WORK ZONE SAFETY & MOBILITY
"from the MOUNTAINS to the COAST"

PLANS PREPARED BY:

DAVID L. WILVER, P.E.
PROJECT ENGINEER

J. MATTHEW PICKENS, P.E.
PROJECT DESIGN ENGINEER

NCDOT CONTACT:

KRISTA KIMMEL

DIVISION OF HIGHWAYS · STATE OF NORTH CAROLINA · DEPARTMENT OF TRANSPORTATION · WORK ZONE TRAFFIC CONTROL

PLANS PREPARED BY :
PARSONS
5540 CENTERVIEW DR., SUITE 217
RALEIGH, NORTH CAROLINA 27606
NC LICENSE NO: F-0246
FOR NORTH CAROLINA DEPT. OF TRANSPORTATION

APPROVED: DocuSigned by: Jason M. Pickens 20CE483822F4ADB...

DATE: 5/27/2020

SEAL

NORTH CAROLINA PROFESSIONAL SEAL 37950 ENGINEER JASON M. PICKENS

19-MAR-2020 10:30
J:\I-40 Storm Repairs Group 2\Traffic\TrafficControl\TCP\I-40_TC_TMP_01.dgn
$$$$USERNAME$$$$

DocuSign Envelope ID: C022DCAA-9751-405B-A29D-BE8B7881F2BC

7/2/99

PROJ. REFERENCE NO.	SHEET NO.
	TMP-1A

ROADWAY STANDARD DRAWINGS

THE FOLLOWING ROADWAY STANDARDS AS SHOWN IN "ROADWAY STANDARD DRAWINGS" - N.C. DEPARTMENT OF TRANSPORTATION - RALEIGH, N.C., DATED JANUARY 2018 ARE APPLICABLE TO THIS PROJECT AND BY REFERENCE HEREBY ARE CONSIDERED A PART OF THESE PLANS:

STD. NO.	TITLE
1101.01	WORK ZONE ADVANCE WARNING SIGNS
1101.02	TEMPORARY LANE CLOSURES
1101.04	TEMPORARY SHOULDER CLOSURES
1101.05	WORK ZONE VEHICLE ACCESSES
1101.11	TRAFFIC CONTROL DESIGN TABLES
1110.01	STATIONARY WORK ZONE SIGNS
1110.02	PORTABLE WORK ZONE SIGNS
1115.01	FLASHING ARROW BOARDS
1130.01	DRUM
1160.01	TEMPORARY CRASH CUSHION
1165.01	TRUCK MOUNTED ATTENUATOR
1170.01	PORTABLE CONCRETE BARRIER
1180.01	SKINNY-DRUM
1261.01	GUARDRAIL AND BARRIER DELINEATORS - INSTALLATION SPACING
1261.02	GUARDRAIL AND BARRIER DELINEATORS - TYPES AND MOUNTING
1262.01	GUARDRAIL END DELINEATION

LEGEND

GENERAL

- DIRECTION OF TRAFFIC FLOW
- EXIST. PVMT.
- NORTH ARROW
- PROPOSED PVMT.
- WORK AREA

TRAFFIC CONTROL DEVICES

- BARRICADE (TYPE III)
- TEMPORARY CRASH CUSHION
- CHANGEABLE MESSAGE SIGN

TEMPORARY SIGNING

- STATIONARY SIGN

PAVEMENT MARKINGS

- EXISTING LINES

PLANS PREPARED BY :
PARSONS
5540 CENTERVIEW DR., SUITE 217
RALEIGH, NORTH CAROLINA 27606
NC LICENSE NO:F-0246
FOR NORTH CAROLINA DEPT. OF TRANSPORTATION

APPROVED DocuSigned by: Jason M. Pickens 20CE483822F4D0B...

DATE: 7/31/2020

SEAL

NORTH CAROLINA PROFESSIONAL SEAL 37950 ENGINEER JASON M. PICKENS

DOCUMENT NOT CONSIDERED FINAL UNLESS ALL SIGNATURES COMPLETED

DIVISION OF HIGHWAYS · STATE OF NORTH CAROLINA · DEPARTMENT OF TRANSPORTATION · WORK ZONE TRAFFIC CONTROL

ROADWAY STANDARD DRAWINGS & LEGEND

31-JUL-2020 10:35
J:\I-40_Storm Repairs Group 2\Traffic\TrafficControl\TCP\I-40_TC_TMP_01A.dgn
$$$$USERNAME$$$$

DocuSign Envelope ID: C022DCAA-9751-405B-A29D-BE8B7881F2BC

PROJ. REFERENCE NO.	SHEET NO.
	TMP-1B

GENERAL NOTES

CHANGES MAY BE REQUIRED WHEN PHYSICAL DIMENSIONS IN THE DETAIL DRAWINGS, STANDARD DETAILS, AND ROADWAY DETAILS ARE NOT ATTAINABLE TO MEET FIELD CONDITIONS OR RESULT IN DUPLICATE OR UNDESIRED OVERLAPPING OF DEVICES. MODIFICATION MAY INCLUDE: MOVING, SUPPLEMENTING, COVERING, OR REMOVAL OF DEVICES AS DIRECTED BY THE ENGINEER.

THE FOLLOWING GENERAL NOTES APPLY AT ALL TIMES FOR THE DURATION OF THE CONSTRUCTION PROJECT EXCEPT WHEN OTHERWISE NOTED IN THE PLAN OR DIRECTED BY THE ENGINEER.

TIME RESTRICTIONS

A) DO NOT CLOSE LANES AS FOLLOWS:

ROAD NAME	DAY AND TIME RESTRICTIONS
I-40 (-L-) & ALL RAMPS	MONDAY-FRIDAY 6:00AM to 7:00PM

B) DO NOT CLOSE OR NARROW TRAVEL LANES DURING HOLIDAYS AND SPECIAL EVENTS AS FOLLOWS:

ROAD NAME
I-40 (-L-) & ALL RAMPS

HOLIDAY

1. FOR ANY UNEXPECTED OCCURRENCE THAT CREATES UNUSUALLY HIGH TRAFFIC VOLUMES, AS DIRECTED BY THE ENGINEER.
2. FOR NEW YEAR'S, BETWEEN THE HOURS OF 6:00 A.M. DECEMBER 31st TO 7:00 P.M. JANUARY 2ND.
3. FOR EASTER, BETWEEN THE HOURS OF 6:00 A.M. THURSDAY AND 7:00 P.M. MONDAY.
4. FOR MEMORIAL DAY, BETWEEN THE HOURS OF 6:00 A.M. FRIDAY TO 7:00 P.M. TUESDAY.
5. FOR INDEPENDENCE DAY, BETWEEN THE HOURS OF 6:00 A.M. THE DAY BEFORE INDEPENDENCE DAY AND 7:00 P.M. THE DAY AFTER INDEPENDENCE DAY.
6. FOR LABOR DAY, BETWEEN THE HOURS OF 6:00 A.M. FRIDAY AND 7:00 P.M. TUESDAY.
7. FOR THANKSGIVING DAY, BETWEEN THE HOURS OF 6:00 A.M. TUESDAY TO 7:00 P.M. MONDAY.
8. FOR CHRISTMAS, BETWEEN THE HOURS OF 6:00 A.M. THE FRIDAY BEFORE THE WEEK OF CHRISTMAS DAY AND 7:00 P.M. THE FOLLOWING TUESDAY AFTER THE WEEK OF CHRISTMAS.

C) DO NOT CLOSE ROADS AS FOLLOWS:

ROAD NAME	DAY AND TIME RESTRICTIONS
RAMP -LPB-, -RPB_1-, & -RPD-	MONDAY-FRIDAY 6:00AM to 7:00PM

D) DO NOT CONDUCT ANY HAULING OPERATIONS AGAINST THE FLOW OF TRAFFIC OF AN OPEN TRAVELWAY UNLESS THE HAULING OPERATION IS PROTECTED BY BARRIER OR GUARDRAIL OR AS DIRECTED BY THE ENGINEER.

LANE AND SHOULDER CLOSURE REQUIREMENTS

E) REMOVE LANE CLOSURE DEVICES FROM THE LANE WHEN WORK IS NOT BEING PERFORMED BEHIND THE LANE CLOSURE OR WHEN A LANE CLOSURE IS NO LONGER NEEDED OR AS DIRECTED BY THE ENGINEER.

F) WHEN PERSONNEL AND/OR EQUIPMENT ARE WORKING WITHIN 15 FT OF AN OPEN TRAVEL LANE, CLOSE THE NEAREST OPEN SHOULDER USING ROADWAY STANDARD DRAWING NO. 1101.04 UNLESS THE WORK AREA IS PROTECTED BY BARRIER OR GUARDRAIL OR A LANE CLOSURE IS INSTALLED.

G) WHEN PERSONNEL AND/OR EQUIPMENT ARE WORKING ON THE SHOULDER ADJACENT TO AN UNDIVIDED FACILITY AND WITHIN 5 FT OF AN OPEN TRAVEL LANE, CLOSE THE NEAREST OPEN TRAVEL LANE USING ROADWAY STANDARD DRAWING NO. 1101.02 UNLESS THE WORK AREA IS PROTECTED BY BARRIER OR GUARDRAIL.

WHEN PERSONNEL AND/OR EQUIPMENT ARE WORKING ON THE SHOULDER ADJACENT TO A DIVIDED FACILITY AND WITHIN 10 FT OF AN OPEN TRAVEL LANE, CLOSE THE NEAREST OPEN TRAVEL LANE USING ROADWAY STANDARD DRAWING NO. 1101.02 UNLESS THE WORK AREA IS PROTECTED BY BARRIER OR GUARDRAIL.

H) WHEN PERSONNEL AND/OR EQUIPMENT ARE WORKING WITHIN A LANE OF TRAVEL OF AN UNDIVIDED OR DIVIDED FACILITY, CLOSE THE LANE ACCORDING TO THE TRAFFIC CONTROL PLANS, ROADWAY STANDARD DRAWINGS, OR AS DIRECTED BY THE ENGINEER. CONDUCT THE WORK SO THAT ALL PERSONNEL AND/OR EQUIPMENT REMAIN WITHIN THE CLOSED TRAVEL LANE.

I) DO NOT WORK SIMULTANEOUSLY WITHIN 15 FT ON BOTH SIDES OF AN OPEN TRAVELWAY, RAMP, OR LOOP WITHIN THE SAME LOCATION UNLESS PROTECTED WITH GUARDRAIL OR BARRIER.

TRAFFIC PATTERN ALTERATIONS

J) NOTIFY THE ENGINEER THIRTY (30) CALENDAR DAYS PRIOR TO ANY TRAFFIC PATTERN ALTERATION.

SIGNING

K) INSTALL ADVANCE WORK ZONE WARNING SIGNS WHEN WORK IS WITHIN 40 FT FROM THE EDGE OF TRAVEL LANE AND NO MORE THAN THREE (3) DAYS PRIOR TO THE BEGINNING OF CONSTRUCTION.

L) ENSURE ALL NECESSARY SIGNING IS IN PLACE PRIOR TO ALTERING ANY TRAFFIC PATTERN.

TRAFFIC BARRIER

M) INSTALL TEMPORARY BARRIER ACCORDING TO THE TRANSPORTATION MANAGEMENT PLANS A MAXIMUM OF TWO (2) WEEKS PRIOR TO BEGINNING WORK IN ANY LOCATION. ONCE TEMPORARY BARRIER IS INSTALLED AT ANY LOCATION PROCEED IN A CONTINUOUS MANNER TO COMPLETE THE PROPOSED WORK IN THAT LOCATION UNLESS OTHERWISE STATED IN THE TRANSPORTATION MANAGEMENT PLANS OR AS DIRECTED BY THE ENGINEER.

DO NOT PLACE BARRIER DIRECTLY ON ANY SURFACE OTHER THAN ASPHALT OR CONCRETE.

ONCE TEMPORARY BARRIER IS INSTALLED AT ANY LOCATION AND NO WORK IS PERFORMED BEHIND THE TEMPORARY BARRIER FOR A PERIOD LONGER THAN TWO (2) MONTHS, REMOVE / RESET TEMPORARY BARRIER AT NO COST TO THE DEPARTMENT UNLESS OTHERWISE STATED IN THE TRANSPORTATION MANAGEMENT PLANS, TEMPORARY BARRIER IS PROTECTING A HAZARD, OR AS DIRECTED BY THE ENGINEER.

INSTALL TEMPORARY BARRIER WITH THE TRAFFIC FLOW BEGINNING WITH THE UPSTREAM SIDE OF TRAFFIC. REMOVE TEMPORARY BARRIER AGAINST THE TRAFFIC FLOW BEGINNING WITH THE DOWNSTREAM SIDE OF TRAFFIC.

INSTALL AND SPACE DRUMS NO GREATER THAN TWICE THE POSTED SPEED LIMIT (MPH) TO CLOSE OR KEEP THE SECTION OF THE ROADWAY CLOSED UNTIL THE TEMPORARY BARRIER CAN BE PLACED OR AFTER THE TEMPORARY BARRIER IS REMOVED.

N) PROTECT THE APPROACH END OF MOVABLE/PORTABLE CONCRETE BARRIER AT ALL TIMES DURING THE INSTALLATION AND REMOVAL OF THE BARRIER BY EITHER A TRUCK MOUNTED ATTENUATOR (MAXIMUM 72 HOURS) OR A TEMPORARY CRASH CUSHION.

PROTECT THE APPROACH END OF MOVABLE/PORTABLE CONCRETE BARRIER FROM ONCOMING TRAFFIC AT ALL TIMES BY A TEMPORARY CRASH CUSHION UNLESS THE APPROACH END OF MOVABLE/PORTABLE CONCRETE BARRIER IS OFFSET FROM ONCOMING TRAFFIC AS FOLLOWS OR AS SHOWN IN THE PLANS: (SEE ALSO 1101.05)

POSTED SPEED LIMIT	MINIMUM OFFSET
40 OR LESS	15 FT
45 - 50	20 FT
55	25 FT
60 MPH or HIGHER	30 FT

TRAFFIC CONTROL DEVICES

O) WHEN LANE CLOSURES ARE NOT IN EFFECT SPACE CHANNELIZING DEVICES IN WORK AREAS NO GREATER IN FEET THAN TWICE THE POSTED SPEED LIMIT (MPH) EXCEPT, 10 FT ON-CENTER IN RADII, AND 3 FT OFF THE EDGE OF AN OPEN TRAVELWAY. REFER TO STANDARD SPECIFICATIONS FOR ROADS AND STRUCTURES SECTIONS 1130 (DRUMS), 1135 (CONES) AND 1180 (SKINNY DRUMS) FOR ADDITIONAL REQUIREMENTS.

PLANS PREPARED BY :
PARSONS
5840 CENTERVIEW DR., SUITE 217
RALEIGH, NORTH CAROLINA 27606
NC LICENSE NO: F-0246
FOR NORTH CAROLINA DEPT. OF TRANSPORTATION

APPROVED: DocuSigned by: Jason M. Pickens
20CE483822FA4DB...
DATE: 7/31/2020
SEAL

NORTH CAROLINA PROFESSIONAL SEAL 37950 ENGINEER JASON M. PICKENS

DOCUMENT NOT CONSIDERED FINAL UNLESS ALL SIGNATURES COMPLETED

DIVISION OF HIGHWAYS · STATE OF NORTH CAROLINA · DEPARTMENT OF TRANSPORTATION · WORK ZONE TRAFFIC CONTROL

GENERAL NOTES

DocuSign Envelope ID: 6F6787DB-0ED0-4FCF-A55D-390A753417BC

PROJ. REFERENCE NO.	SHEET NO.
	TMP-2

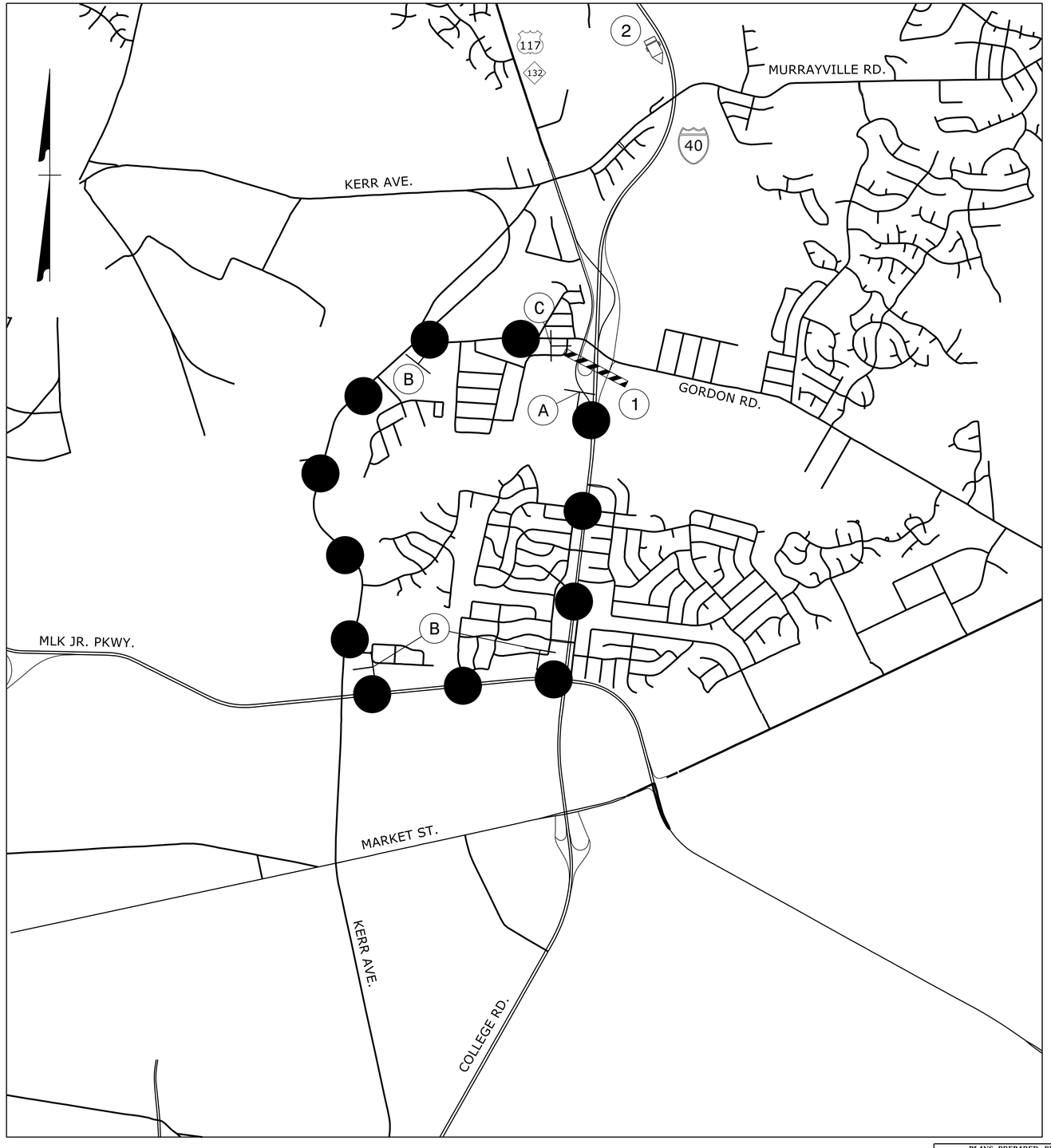

DETOUR ROUTE (5.2 MILES)

A

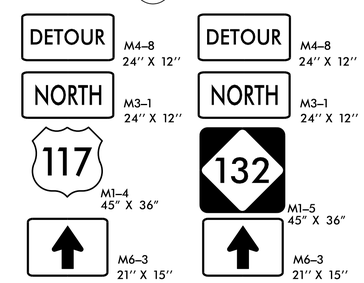

B

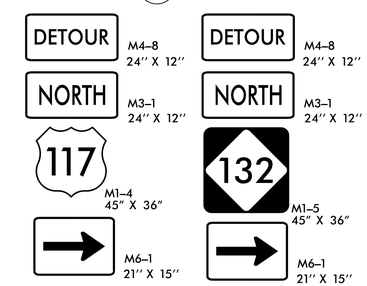

C

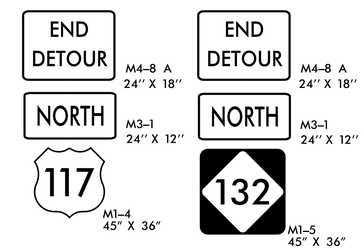

1

TYPE III BARRICADE

2

MESSAGE NO. 1	MESSAGE NO. 2
EXIT 420 CLOSED AHEAD	FOLLOW DETOUR SIGNS

CHANGEABLE MESSAGE SIGN

PLANS PREPARED BY :
PARSONS
RALEIGH, NORTH CAROLINA, (919) 854-1345
NC LICENSE NO. F-0246
FOR NORTH CAROLINA DEPT. OF TRANSPORTATION

APPROVED: DocuSigned by: Jason M. Pickens 20CE483822FA4DB...
DATE: 5/27/2020
SEAL

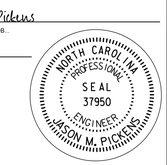

DOCUMENT NOT CONSIDERED FINAL UNLESS ALL SIGNATURES COMPLETED

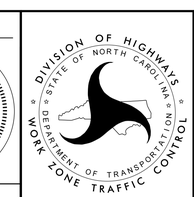

I-40 EASTBOUND OFF-RAMP
(-LPB-) OFF-SITE DETOUR

19-MAR-2020 10:33
J:\I-40 Storm Repairs Group 2\Traffic\TrafficControl\TCP\I-40_TC_TMP_02.dgn
$$$$USERNAME$$$$

DocuSign Envelope ID: 6F6787DB-0ED0-4FCF-A55D-390A753417BC

PROJ. REFERENCE NO.	SHEET NO.
	TMP-2A

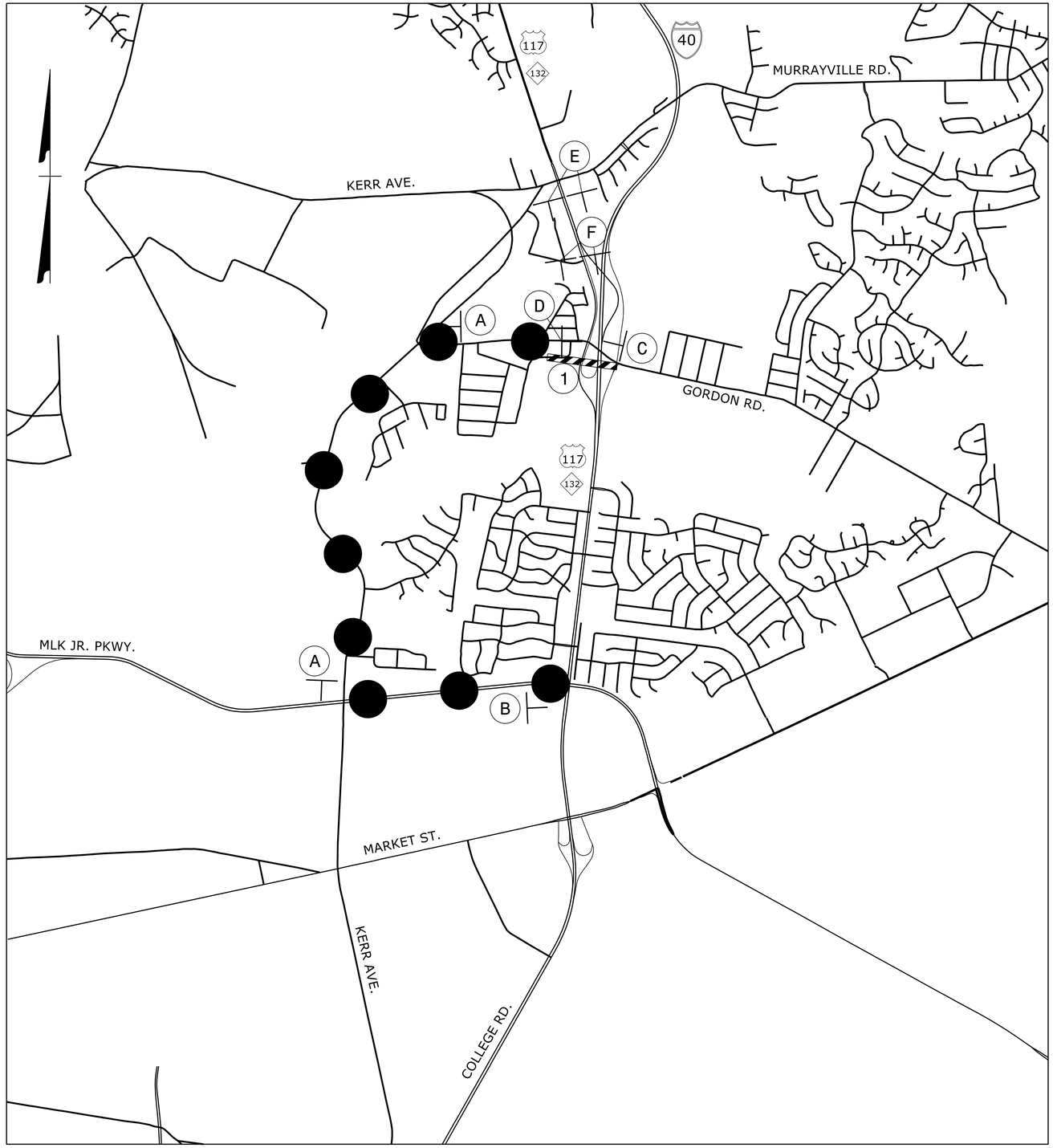

DETOUR ROUTE (3.8 MILES)

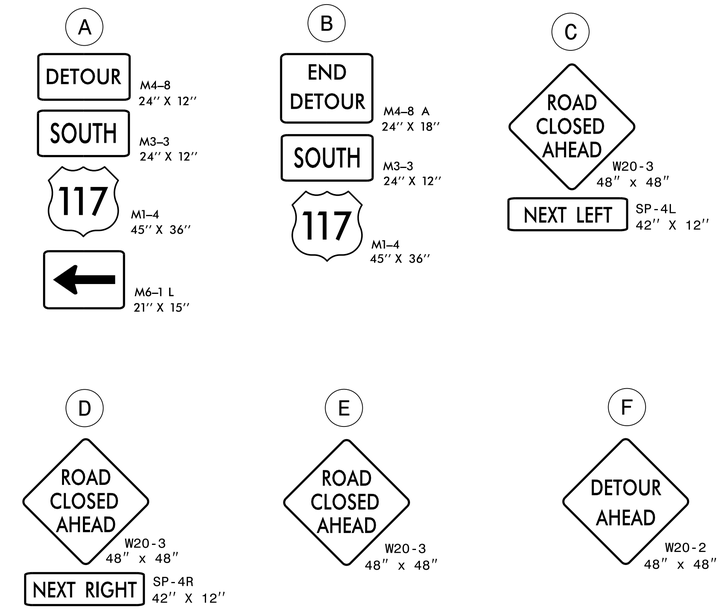

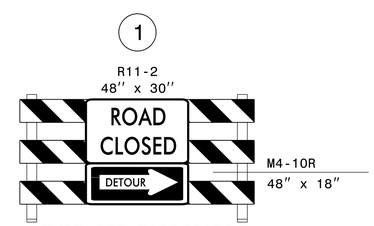

TYPE III BARRICADE

PLANS PREPARED BY :
PARSONS
RALEIGH, NORTH CAROLINA, (919) 854-1345
NC LICENSE NO. F-0246
FOR NORTH CAROLINA DEPT. OF TRANSPORTATION

APPROVED: DocuSigned by: Jason M. Pickens 20CE483822FA4DB...
DATE: 5/27/2020
SEAL
NORTH CAROLINA PROFESSIONAL SEAL 37950 ENGINEER JASON M. PICKENS

DOCUMENT NOT CONSIDERED FINAL UNLESS ALL SIGNATURES COMPLETED

DIVISION OF HIGHWAYS · STATE OF NORTH CAROLINA · DEPARTMENT OF TRANSPORTATION · WORK ZONE TRAFFIC CONTROL

US 117 SOUTH / COLLEGE ROAD ON-RAMP
(-RPB_1-) OFF-SITE DETOUR

19-MAR-2020 10:33
J:\V-40_Storm Repairs Group 2\Traffic\TrafficControl\TCP\I-40_TC_TMP_02A.dgn
$$$$USERNAME$$$$

DocuSign Envelope ID: 6F6787DB-0ED0-4FCF-A55D-390A753417BC

PROJ. REFERENCE NO.	SHEET NO.
	TMP - 2B

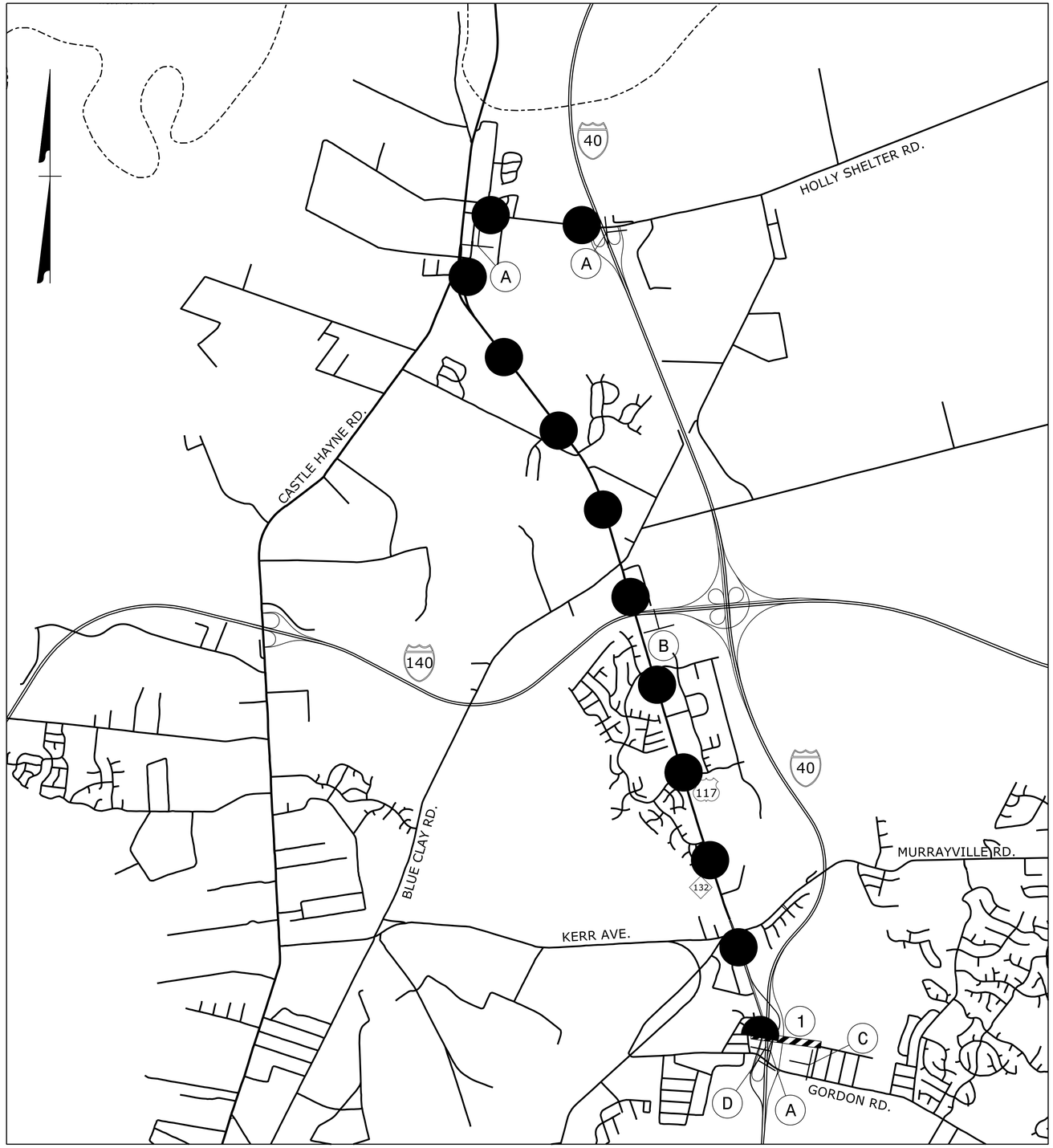

DETOUR ROUTE (6.9 MILES)

A

DETOUR M4-8 24" X 12"

WEST M3-4 24" X 12"

INTERSTATE 40 M1-1 36" X 36"

M6-1 21" X 15"

B

DETOUR M4-8 24" X 12"

WEST M3-4 24" X 12"

INTERSTATE 40 M1-1 36" X 36"

M6-3 21" X 15"

C

ROAD CLOSED AHEAD W20-3 48" x 48"

NEXT RIGHT SP-4R 42" X 12"

D

ROAD CLOSED AHEAD W20-3 48" x 48"

NEXT LEFT SP-4L 42" X 12"

1

R11-2 48" x 30"

ROAD CLOSED

DETOUR

M4-10L 48" x 18"

TYPE III BARRICADE

PLANS PREPARED BY :

PARSONS

RALEIGH, NORTH CAROLINA, (919) 854-1345

NC LICENSE NO. F-0246

FOR NORTH CAROLINA DEPT. OF TRANSPORTATION

APPROVED: DocuSigned by: Jason M. Pickens 20CE483822FA4DB...

DATE: 5/27/2020

SEAL

NORTH CAROLINA PROFESSIONAL SEAL 37950 ENGINEER JASON M. PICKENS

DOCUMENT NOT CONSIDERED FINAL UNLESS ALL SIGNATURES COMPLETED

DIVISION OF HIGHWAYS · STATE OF NORTH CAROLINA · DEPARTMENT OF TRANSPORTATION · WORK ZONE TRAFFIC CONTROL

I-40 WESTBOUND ON-RAMP (-RPD-) OFF-SITE DETOUR

19-MAR-2020 10:34
J:\I-40 Storm Repairs Group 2\Traffic\TrafficControl\TCP\I-40_TC_TMP_02B.dgn
$$$$USERNAME$$$$

DocuSign Envelope ID: 7FE1F516-EC94-42E9-A06F-2523988072D5

PROJ. REFERENCE NO.	SHEET NO.
	TMP-3

PHASING

NOTES:

RETURN TRAFFIC TO THE CURRENT TRAFFIC PATTERN AT THE END OF EACH WORK PERIOD UNLESS OTHERWISE NOTED IN THE PHASING OR DIRECTED BY THE ENGINEER.

COMPLETE ANY PROPOSED WIDENING IN SUCH A MANNER THAT PONDING OF WATER WILL NOT OCCUR IN THE TRAVEL LANE.

MAINTAIN VEHICULAR ACCESS TO ALL RESIDENCES AND BUSINESSES DURING THE LIFE OF THE CONTRACT UNLESS OTHERWISE NOTED IN THE PHASING OR DIRECTED BY THE ENGINEER.

WEDGING OPERATIONS SHOULD BE DONE IN SUCH A MANNER THAT SMOOTH TRANSITIONS ARE PROVIDED AT THE END OF EACH DAY BETWEEN TRAVEL LANES AND AT TIE-INS WITH EXISTING PAVEMENT.

THE TERM RSD DENOTES ROADWAY STANDARD DRAWINGS.

PHASE I

STEP 1: INSTALL ADVANCE WORK ZONE WARNING SIGNS ACCORDING TO RSD 1101.01 (SHEET 1 OF 3).

STEP 2: USING RSD 1101.02 (SHEET 4 OF 14) AS NEEDED, PLACE THE PORTABLE CONCRETE BARRIER AS SHOWN ON TMP-4 & TMP-5 AND INSTALL AND COVER OFF-SITE DETOUR SIGNS AS SHOWN ON TMP-2 THRU TMP-2B.

STEP 3: USING RSD 1101.02 (SHEET 4 OF 14) AS NEEDED, CONSTRUCT THE FOLLOWING AS SHOWN ON TMP-4:

* OUTSIDE SHOULDER CONSTRUCTION FOR -L- (I-40) RT.
* OUTSIDE SHOULDER CONSTRUCTION FOR -RPB- RT.

NOTE: FOR STEPS 4 THRU 6, WORK TO BE PERFORMED BEHIND PORTABLE CONCRETE BARRIER DAY OR NIGHT, LOOP/RAMP CLOSURES TO OCCUR ONLY DURING WEEKENDS AND NIGHTS (SEE GENERAL NOTE C).

STEP 4: USING OFF-SITE DETOUR AS SHOWN ON TMP-2 AS NEEDED, CONSTRUCT THE FOLLOWING AS SHOWN ON TMP-4:

* OUTSIDE SHOULDER CONSTRUCTION FOR -LPB- RT.

STEP 5: USING OFF-SITE DETOUR AS SHOWN ON TMP-2A AS NEEDED, CONSTRUCT THE FOLLOWING AS SHOWN ON TMP-4:

* OUTSIDE SHOULDER CONSTRUCTION FOR -RPB_1- LT. & RT.

STEP 6: USING OFF-SITE DETOUR AS SHOWN ON TMP-2B AS NEEDED, CONSTRUCT THE FOLLOWING AS SHOWN ON TMP-5:

* OUTSIDE SHOULDER CONSTRUCTION FOR -RPD- LT.

STEP 7: REMOVE ALL TRAFFIC CONTROL DEVICES AND SIGNING.

PLANS PREPARED BY
PARSONS
5540 CENTERVIEW DR., SUITE 217
RALEIGH, NORTH CAROLINA 27606
NC LICENSE NO: F-0246
FOR NORTH CAROLINA DEPT. OF TRANSPORTATION

APPROVED: DocuSigned by: Jason M. Pickens 20CE483822FA4DB...

DATE: 8/26/2020

SEAL

NORTH CAROLINA PROFESSIONAL SEAL 37950 ENGINEER JASON M. PICKENS

DOCUMENT NOT CONSIDERED FINAL UNLESS ALL SIGNATURES COMPLETED

DIVISION OF HIGHWAYS · STATE OF NORTH CAROLINA · DEPARTMENT OF TRANSPORTATION · WORK ZONE TRAFFIC CONTROL

PHASING

DocuSign Envelope ID: 7FE1F516-EC94-42E9-A06F-2523988072D5

PROJ. REFERENCE NO.	SHEET NO.
	TMP-4

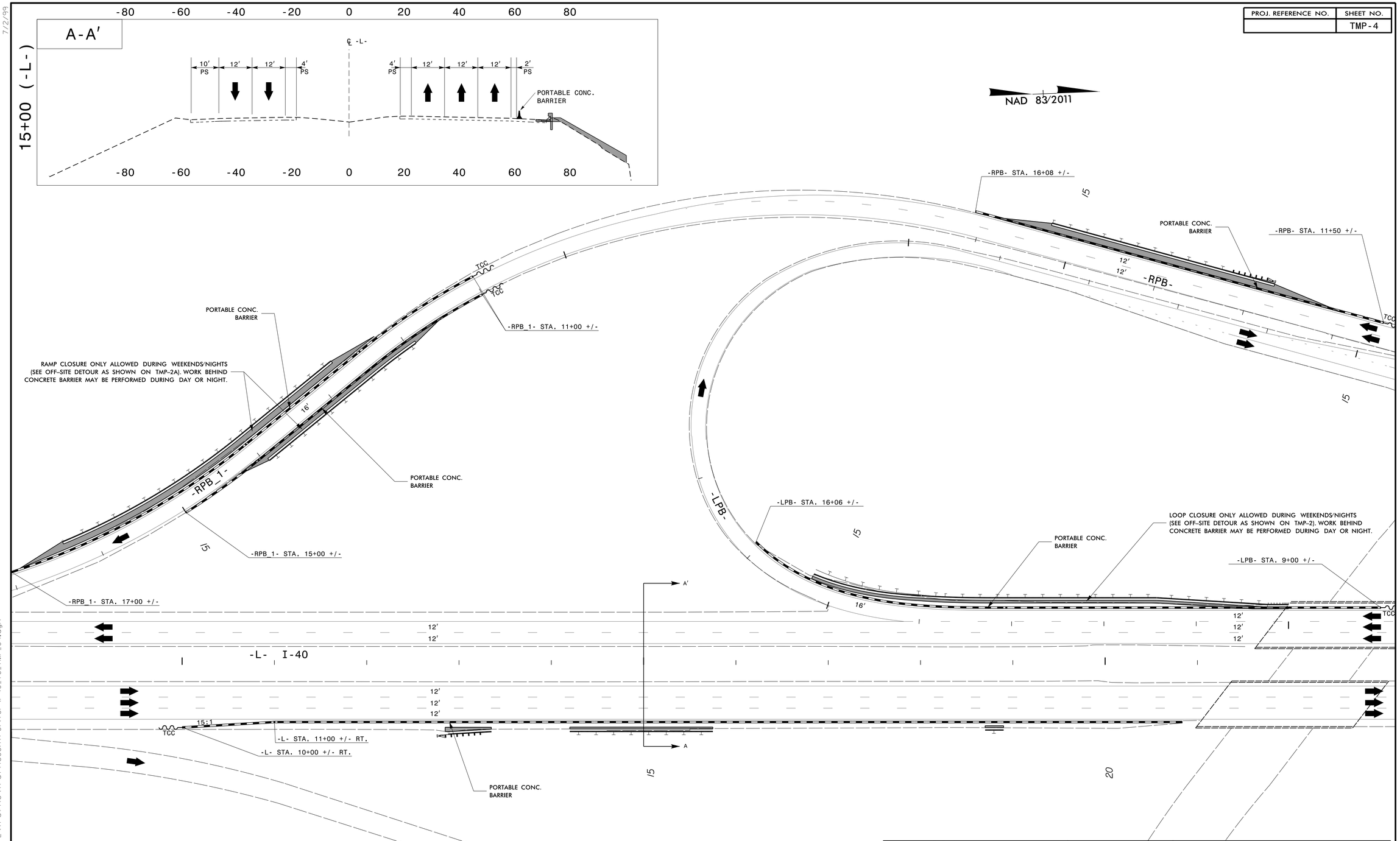

PLANS PREPARED BY
PARSONS
5540 CENTERVIEW DR., SUITE 211
RALEIGH, NORTH CAROLINA 27606
NC LICENSE NO: F-1024G
FOR NORTH CAROLINA DEPT. OF TRANSPORTATION

APPROVED DocuSigned by: Jason M. Pickens
20CE483822FA4DB...

DATE: 8/26/2020

SEAL

NORTH CAROLINA PROFESSIONAL SEAL 37950 ENGINEER JASON M. PICKENS

DOCUMENT NOT CONSIDERED FINAL UNLESS ALL SIGNATURES COMPLETED

DIVISION OF HIGHWAYS · STATE OF NORTH CAROLINA · DEPARTMENT OF TRANSPORTATION · WORK ZONE TRAFFIC CONTROL

PHASE I
DETAIL 1

26-AUG-2020 08:42
J:\I-40_Storm Repairs Group 2\Traffic\TrafficControl\TCP\I-40_TC_TMP_04.dgn
$$$$USERNAME$$$$

7/2/99

DocuSign Envelope ID: 7FE1F516-EC94-42E9-A06F-2523988072D5

PROJ. REFERENCE NO.	SHEET NO.
	TMP-5

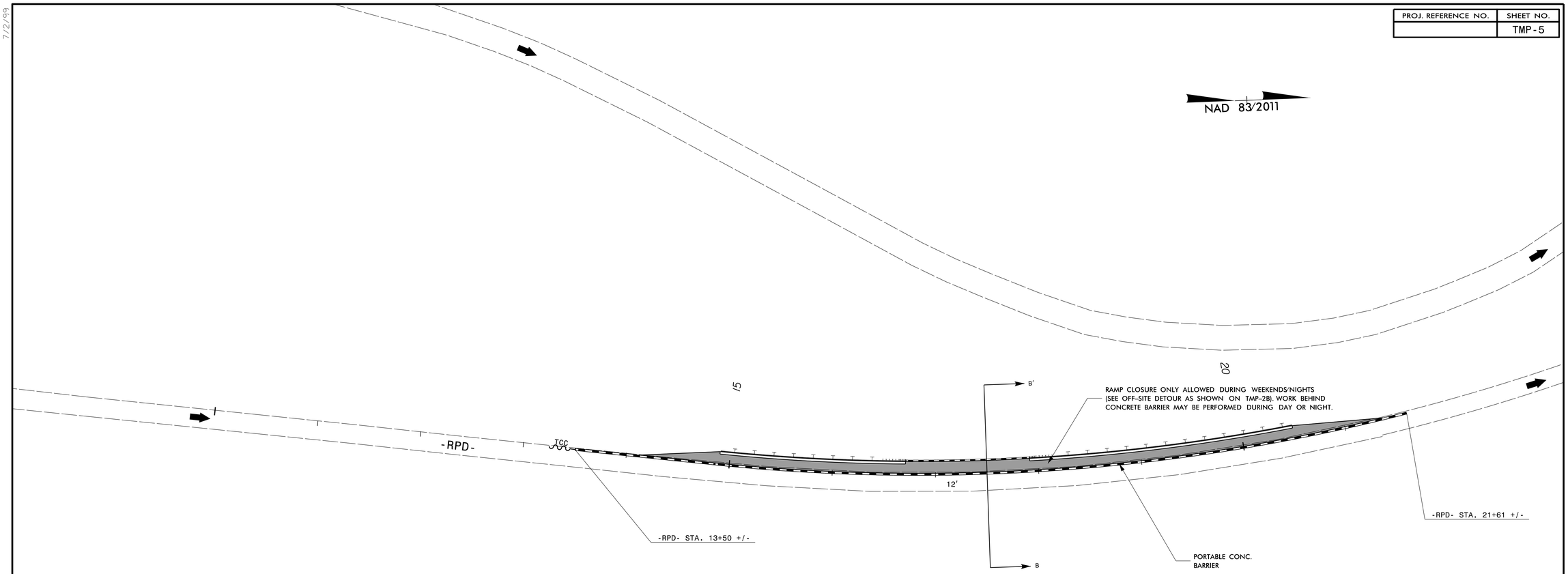

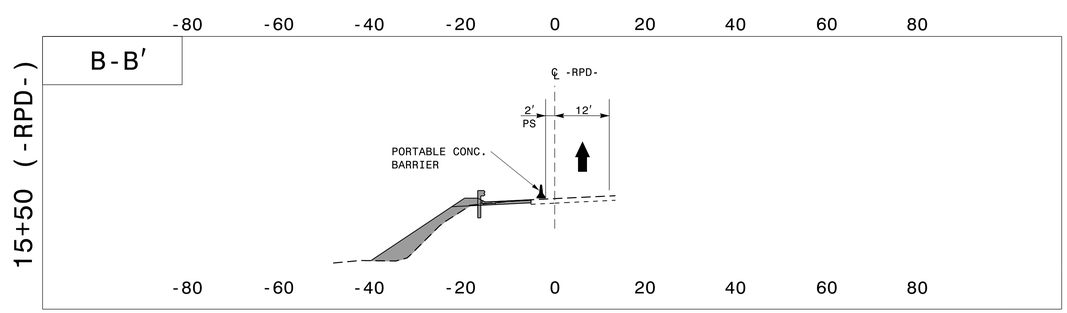

PLANS PREPARED BY :
PARSONS
5540 CENTERVIEW DR., SUITE 217
RALEIGH, NORTH CAROLINA 27606
NC LICENSE NO: F-0246
FOR NORTH CAROLINA DEPT. OF TRANSPORTATION

APPROVED: DocuSigned by: Jason M. Pickens 20CE483822FA4DB...

DATE: 8/26/2020

SEAL

NORTH CAROLINA PROFESSIONAL SEAL 37950 ENGINEER JASON M. PICKENS

DOCUMENT NOT CONSIDERED FINAL UNLESS ALL SIGNATURES COMPLETED

DIVISION OF HIGHWAYS · STATE OF NORTH CAROLINA · DEPARTMENT OF TRANSPORTATION · WORK ZONE TRAFFIC CONTROL

PHASE I
DETAIL 2

7/2/99

26-AUG-2020 08:42
J:\I-40 Storm Repairs Group 2\Traffic\TrafficControl\TCP\I-40_TC_TMP_05.dgn
$$$$USERNAME$$$$

STATE OF NORTH CAROLINA
DIVISION OF HIGHWAYS

PLAN FOR PROPOSED
HIGHWAY EROSION CONTROL

NEW HANOVER COUNTY

LOCATION: I-40 AT EXIT 420 (GORDON ROAD /US 117 /NC 132)
TYPE OF WORK: GRADING, DRAINAGE, CULVERT, PAVING, AND STRUCTURE

STATE	STATE PROJECT REFERENCE NO.	SHEET NO.	TOTAL SHEETS
N.C.	I-40	EC-1	

STATE PROJ. NO.	F.A. PROJ. NO.	DESCRIPTION

TIP PROJECT:

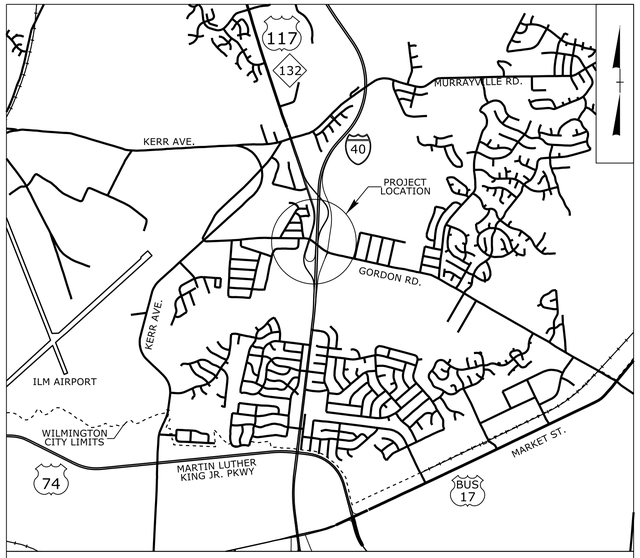

VICINITY MAP

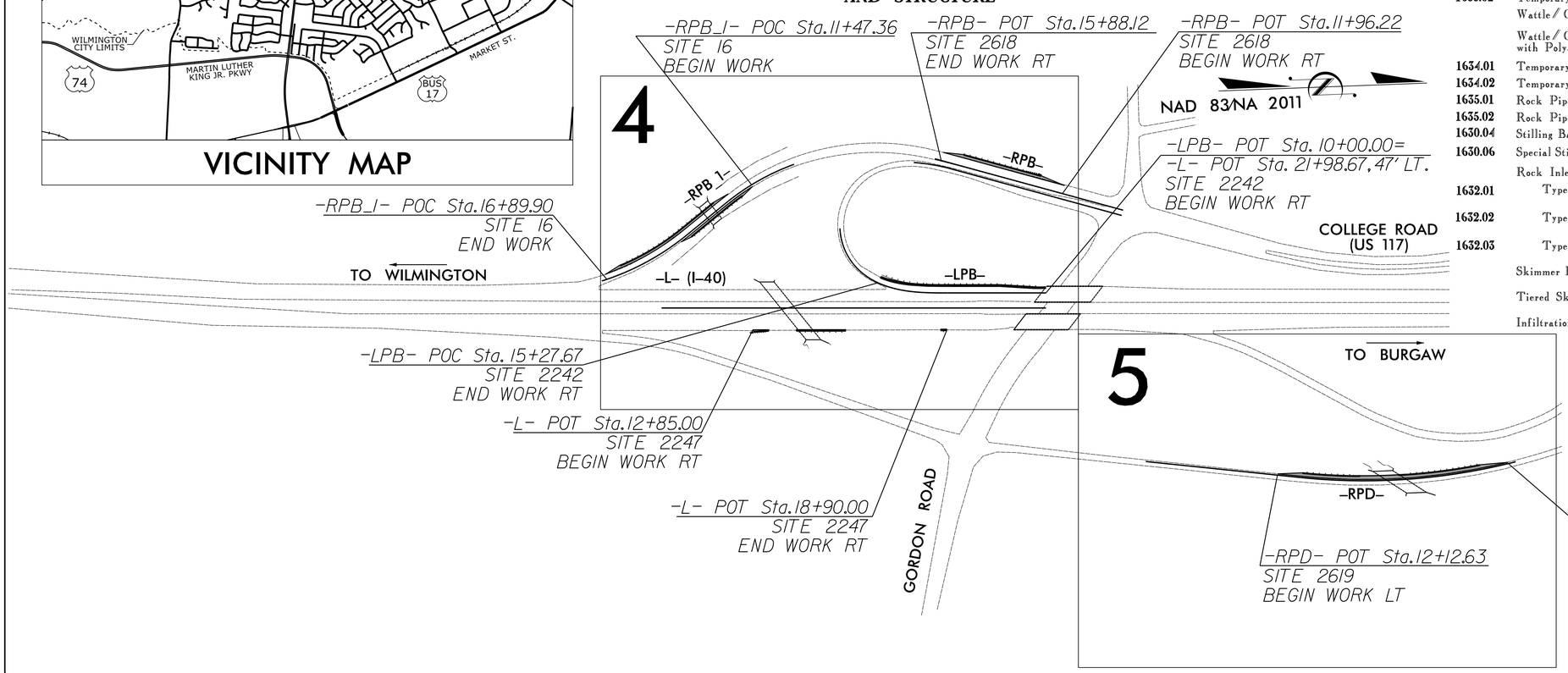

THIS PROJECT CONTAINS EROSION CONTROL PLANS FOR CLEARING AND GRUBBING PHASE OF CONSTRUCTION.

EROSION AND SEDIMENT CONTROL MEASURES

Std. #	Description	Symbol
1630.03	Temporary Silt Ditch	TSD
1630.05	Temporary Diversion	TD
1605.01	Temporary Silt Fence	
1606.01	Special Sediment Control Fence	
1622.01	Temporary Berms and Slope Drains	
1630.02	Silt Basin Type B	
1633.01	Temporary Rock Silt Check Type-A	
	Temporary Rock Silt Check Type-A with Matting and Polyacrylamide (PAM)	
1633.02	Temporary Rock Silt Check Type-B	
	Wattle / Coir Fiber Wattle	EW CFW
	Wattle / Coir Fiber Wattle with Polyacrylamide (PAM)	
1634.01	Temporary Rock Sediment Dam Type-A	
1634.02	Temporary Rock Sediment Dam Type-B	
1635.01	Rock Pipe Inlet Sediment Trap Type-A	
1635.02	Rock Pipe Inlet Sediment Trap Type-B	
1630.04	Stilling Basin	
1630.06	Special Stilling Basin	
	Rock Inlet Sediment Trap:	
1632.01	Type A	A
1632.02	Type B	B
1632.03	Type C	C
	Skimmer Basin	
	Tiered Skimmer Basin	
	Infiltration Basin	

GRAPHIC SCALE

50 25 0 50 100

PLANS

THESE EROSION AND SEDIMENT CONTROL PLANS COMPLY WITH THE APPLICABLE REGULATIONS SET FORTH BY THE NCG-010000 GENERAL CONSTRUCTION PERMIT EFFECTIVE APRIL 1, 2019 AND ISSUED BY THE NORTH CAROLINA DEPARTMENT OF ENVIRONMENTAL QUALITY DIVISION OF WATER RESOURCES.

Prepared in the Office of:

PLANS PREPARED BY :
PARSONS
5540 Centerview Drive, Suite 217
Raleigh, NC 27606
Bus: 919-854-1345 Fax: 919-851-2103
NC LICENSE NO. F-0246
FOR NORTH CAROLINA DEPT. OF TRANSPORTATION

Designed by:

JIANBIAO LU, PE — ***3115***
NAME — *LEVEL III CERTIFICATION NO.*

Roadway Standard Drawings

The following roadway english standards as appear in "Roadway Standard Drawings"– Roadway Design Unit – N. C. Department of Transportation – Raleigh, N. C., dated January 2018 and the latest revison thereto are applicable to this project and by reference hereby are considered a part of these plans.

1604.01	Railroad Erosion Control Detail	1632.01	Rock Inlet Sediment Trap Type A
1605.01	Temporary Silt Fence	1632.02	Rock Inlet Sediment Trap Type B
1606.01	Special Sediment Control Fence	1632.03	Rock Inlet Sediment Trap Type C
1607.01	Gravel Construction Entrance	1633.01	Temporary Rock Silt Check Type A
1622.01	Temporary Berms and Slope Drains	1633.02	Temporary Rock Silt Check Type B
1630.01	Riser Basin	1634.01	Temporary Rock Sediment Dam Type A
1630.02	Silt Basin Type B	1634.02	Temporary Rock Sediment Dam Type B
1630.03	Temporary Silt Ditch	1635.01	Rock Pipe Inlet Sediment Trap Type A
1630.04	Stilling Basin	1635.02	Rock Pipe Inlet Sediment Trap Type B
1630.05	Temporary Diversion	1640.01	Coir Fiber Baffle
1630.06	Special Stilling Basin	1645.01	Temporary Stream Crossing
1631.01	Matting Installation		

09/08/99
26-MAY-2020 10:14
J:\I-40 Storm Repairs Group 2\Erosion Control\Plans\I-40_StormRepairsGroup2_EC01_TSH.dgn
59741A

PROJECT REFERENCE NO.	SHEET NO.
I-40	EC-2
R/W SHEET NO.	
ROADWAY DESIGN ENGINEER	HYDRAULICS ENGINEER

SILT FENCE WATTLE BREAK DETAIL

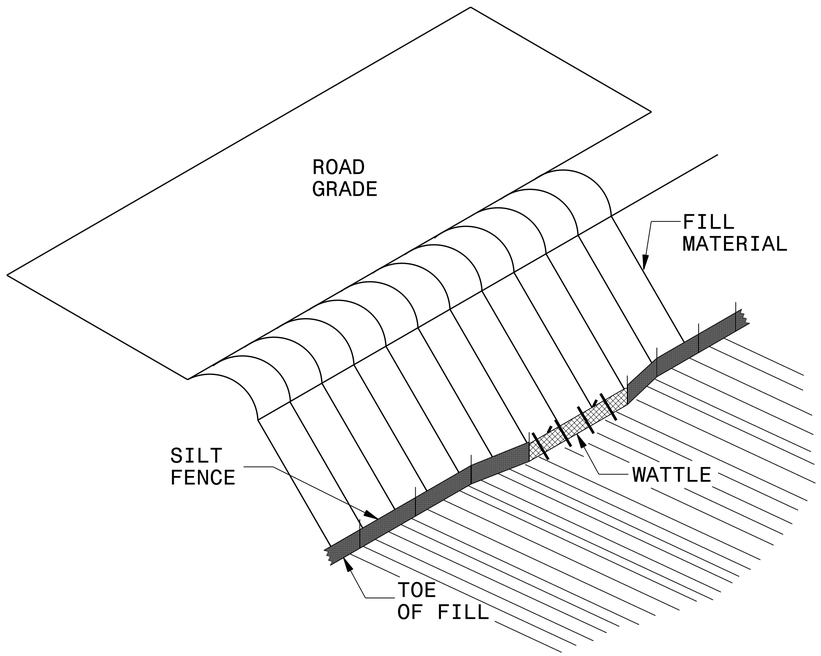

ISOMETRIC VIEW

NOTES:

USE MINIMUM 12 IN. DIAMETER EXCELSIOR WATTLE AND LENGTH OF 10 FT.

EXCAVATE A 1 TO 2 INCH TRENCH FOR WATTLE TO BE PLACED.

DO NOT PLACE WATTLE ON TOE OF SLOPE.

USE 2 FT. WOODEN STAKES WITH A 2 IN. BY 2 IN. NOMINAL CROSS SECTION.

INSTALL A MINIMUM OF 2 UPSLOPE STAKES AND 4 DOWNSLOPE STAKES AT AN ANGLE TO WEDGE WATTLE TO GROUND.

PROVIDE STAPLES MADE OF 0.125 IN. DIAMETER STEEL WIRE FORMED INTO A U SHAPE NOT LESS THAN 12″ IN LENGTH.

INSTALL STAPLES APPROXIMATELY EVERY 1 LINEAR FOOT ON BOTH SIDES OF WATTLE AND AT EACH END TO SECURE IT TO THE SOIL.

WATTLE INSTALLATION CAN BE ON OUTSIDE OF THE SILT FENCE AS DIRECTED.

INSTALL TEMPORARY SILT FENCE IN ACCORDANCE WITH SECTION 1605 OF THE STANDARD SPECIFICATIONS.

INSET A

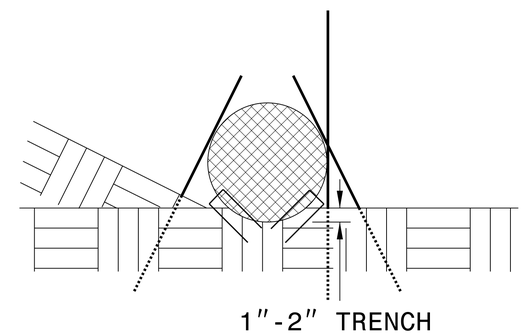

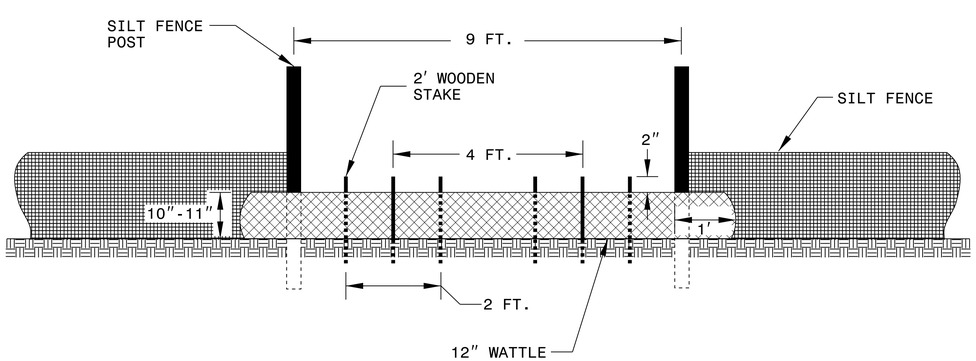

VIEW FROM SLOPE

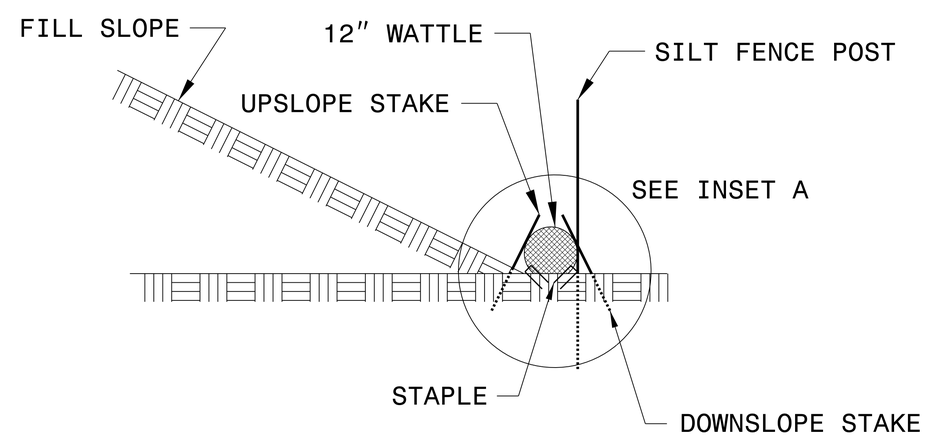

SIDE VIEW

PROJECT REFERENCE NO.	SHEET NO.
I-40	EC-3
ROADWAY DESIGN ENGINEER	HYDRAULICS ENGINEER

DIVISION OF HIGHWAYS
STATE OF NORTH CAROLINA

SOIL STABILIZATION TIMEFRAMES

SITE DESCRIPTION	STABILIZATION TIME	TIMEFRAME EXCEPTIONS
PERIMETER DIKES, SWALES, DITCHES AND SLOPES	7 DAYS	NONE
HIGH QUALITY WATER (HQW) ZONES	7 DAYS	NONE
SLOPES STEEPER THAN 3:1	7 DAYS	IF SLOPES ARE 10' OR LESS IN LENGTH AND ARE NOT STEEPER THAN 2:1, 14 DAYS ARE ALLOWED.
SLOPES 3:1 OR FLATTER	14 DAYS	7 DAYS FOR SLOPES GREATER THAN 50' IN LENGTH.
ALL OTHER AREAS WITH SLOPES FLATTER THAN 4:1	14 DAYS	NONE, EXCEPT FOR PERIMETERS AND HQW ZONES.

PLANS PREPARED BY :
PARSONS
RALEIGH, NORTH CAROLINA, (919) 854-1345
NC LICENSE NO. F-0246
FOR NORTH CAROLINA DEPT. OF TRANSPORTATION

PROJECT REFERENCE NO.	SHEET NO.
I-40	EC-04/CONST.04
R/W SHEET NO.	
ROADWAY DESIGN ENGINEER	HYDRAULICS ENGINEER

CLEARING AND GRUBBING
EROSION CONTROL FOR
CONSTRUCTION SHEET 04

DOCUMENT NOT CONSIDERED FINAL UNLESS ALL SIGNATURES COMPLETED

NOTE:
PLACE TEMPORARY ROCK SEDIMENT DAMS TYPE – B AND TEMPORARY ROCK SILT CHECKS TYPE – A AT DRAINAGE OUTLETS.

THE OUTSIDE BUFFER, WETLAND OR WATER BOUNDARY SHALL BE CLEARLY MARKED BY HIGHLY VISIBLE FENCING (ORANGE SAFETY FENCE)

NAD 83/2011

-RPB- POT Sta.15+88.12
SITE 2618
END WORK RT

-RPB- POT Sta. 16+08.49

-RPB_1- PC Sta.10+00.00

-RPB_1- PT Sta.12+44.63

-RPB_1- PC Sta.14+03.66

-RPB_1- POC Sta.11+47.36
SITE 16
BEGIN WORK

-RPB_1- PT Sta.17+06.18

-LPB_1- PT Sta.11+17.76

-LPB_1- PC Sta.10+00.00

-RPB- POT Sta.11+96.22
SITE 2618
BEGIN WORK RT

-LPB- PT Sta.17+45.81

-LPB- SC Sta.16+05.64

-LPB- POT Sta.10+00.00=
-L- POT Sta.21+98.67, 47' LT
SITE 2242
BEGIN WORK RT

-LPB- POC Sta.15+27.67
SITE 2242
END WORK RT

-RPB_1- POC Sta.16+89.90 -L- POT Sta.12+85.00
SITE 16
END WORK
SITE 2247
BEGIN WORK RT

-LPB- TS Sta.13+05.64

-L- POT Sta.10+00.00

-L- POT Sta.21+98.67

-L- POT Sta.18+90.00
SITE 2247
END WORK RT

S 57° 03' 05.6" E

S 17° 27' 15.7" W

N 17° 27' 15.7" E

S 2° 10' 42.1" W

N 2° 10' 42.1" E

CL 'B' RIP RAP
EST 1 TON
EST 5 SY GF

CL 'B' RIP RAP
EST 2 TON
EST 7 SY GF

15" RCP-III

CAP WELDOWS

REMOVE

RETAIN

RETAIN AND CLEAR OUT DEBRIS

EW

2GI

I-40 WEST BOUND
52' PAVED ROADWAY

I-40 EAST BOUND
37' PAVED ROADWAY

VAR PAVED SHOULDER

4' PAVED SHOULDER

12' PAVED SHOULDER

-RPB_1-

PI Sta 11+23.49	PI Sta 15+56.75
Δ = 19° 19' 57.6" (LT)	Δ = 21° 39' 58.0" (RT)
D = 7° 54' 10.3"	D = 7° 09' 43.1"
L = 244.63'	L = 302.52'
T = 123.49'	T = 153.09'
R = 725.00'	R = 800.00'

-LPB-

PI Sta 16+79.08	PIs Sta 15+12.58
Δ = 42° 16' 07.4" (RT)	Θs = 45° 14' 00.6"
D = 30° 09' 20.4"	Ls = 300.00'
L = 140.17'	LT = 206.94'
T = 73.45'	ST = 106.34'
R = 190.00'	

-LPB_1-

PI Sta 10+59.07
Δ = 11° 14' 43.0" (RT)
D = 9° 32' 57.5"
L = 117.76'
T = 59.07'
R = 600.00'

8/17/99

3:\ JUL 2020 16:56
8374A
I-40 Storm Repairs Group 2\Erosion Control\Plans\I-40_StormRepairsGroup2_EC04_PSH04.dgn

8/17/99

NOTE:
PLACE TEMPORARY ROCK SEDIMENT DAMS TYPE – B AND TEMPORARY ROCK SILT CHECKS TYPE – A AT DRAINAGE OUTLETS.

CLEARING AND GRUBBING
EROSION CONTROL FOR
CONSTRUCTION SHEET 05

THE OUTSIDE BUFFER, WETLAND OR WATER BOUNDARY SHALL BE CLEARLY MARKED BY HIGHLY VISIBLE FENCING (ORANGE SAFETY FENCE)

NAD 83/2011

PLANS PREPARED BY :
PARSONS
RALEIGH, NORTH CAROLINA, (919) 854-1345
NC LICENSE NO. F-0246
FOR NORTH CAROLINA DEPT. OF TRANSPORTATION

PROJECT REFERENCE NO.	SHEET NO.
I-40	EC-05/CONST.05
R/W SHEET NO.	
ROADWAY DESIGN ENGINEER	HYDRAULICS ENGINEER

DOCUMENT NOT CONSIDERED FINAL UNLESS ALL SIGNATURES COMPLETED

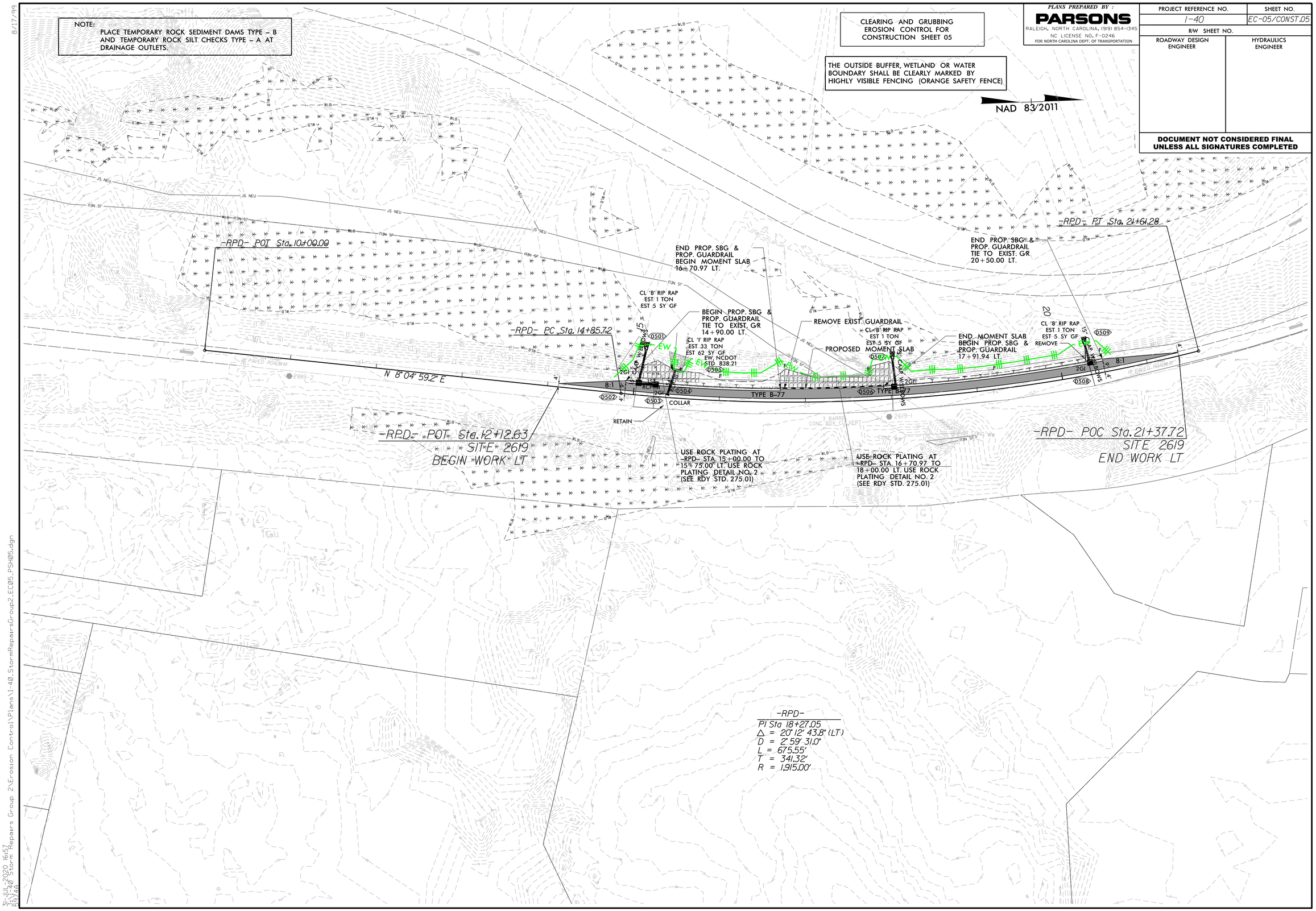

31-JUL-2020 16:57
I-40 Storm Repairs Group 2\Erosion Control\Plans\I-40_StormRepairsGroup2_EC05_PSH05.dgn

PLANS PREPARED BY :
PARSONS
RALEIGH, NORTH CAROLINA, (919) 854-1345
NC LICENSE NO. F-0246
FOR NORTH CAROLINA DEPT. OF TRANSPORTATION

PROJECT REFERENCE NO.	SHEET NO.
I-40	EC-06/CONST.04
R/W SHEET NO.	
ROADWAY DESIGN ENGINEER	HYDRAULICS ENGINEER

FINAL GRADING
EROSION CONTROL FOR
CONSTRUCTION SHEET 04

DOCUMENT NOT CONSIDERED FINAL UNLESS ALL SIGNATURES COMPLETED

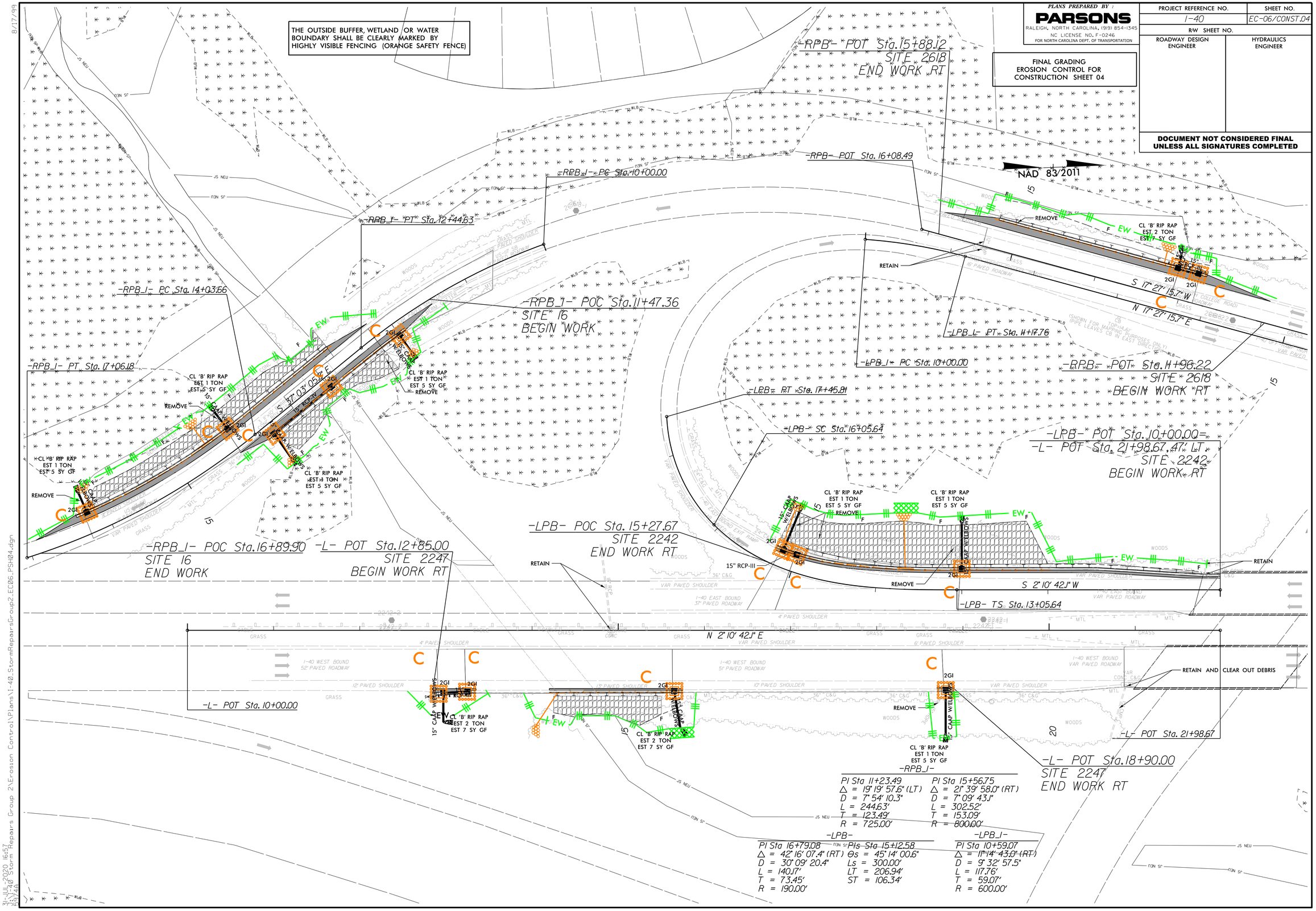

8/17/99

3:JUL-2020 16:57
R-5374A I-40 Storm Repairs Group 2\Erosion Control\Plans\I-40_StormRepairsGroup2_EC06_PSH04.dgn

PLANS PREPARED BY :
PARSONS
RALEIGH, NORTH CAROLINA, (919) 854-1345
NC LICENSE NO. F-0246
FOR NORTH CAROLINA DEPT. OF TRANSPORTATION

PROJECT REFERENCE NO.	SHEET NO.
I-40	EC-07/CONST.05
R/W SHEET NO.	
ROADWAY DESIGN ENGINEER	HYDRAULICS ENGINEER

DOCUMENT NOT CONSIDERED FINAL UNLESS ALL SIGNATURES COMPLETED

FINAL GRADING
EROSION CONTROL FOR
CONSTRUCTION SHEET 05

THE OUTSIDE BUFFER, WETLAND OR WATER BOUNDARY SHALL BE CLEARLY MARKED BY HIGHLY VISIBLE FENCING (ORANGE SAFETY FENCE)

NAD 83/2011

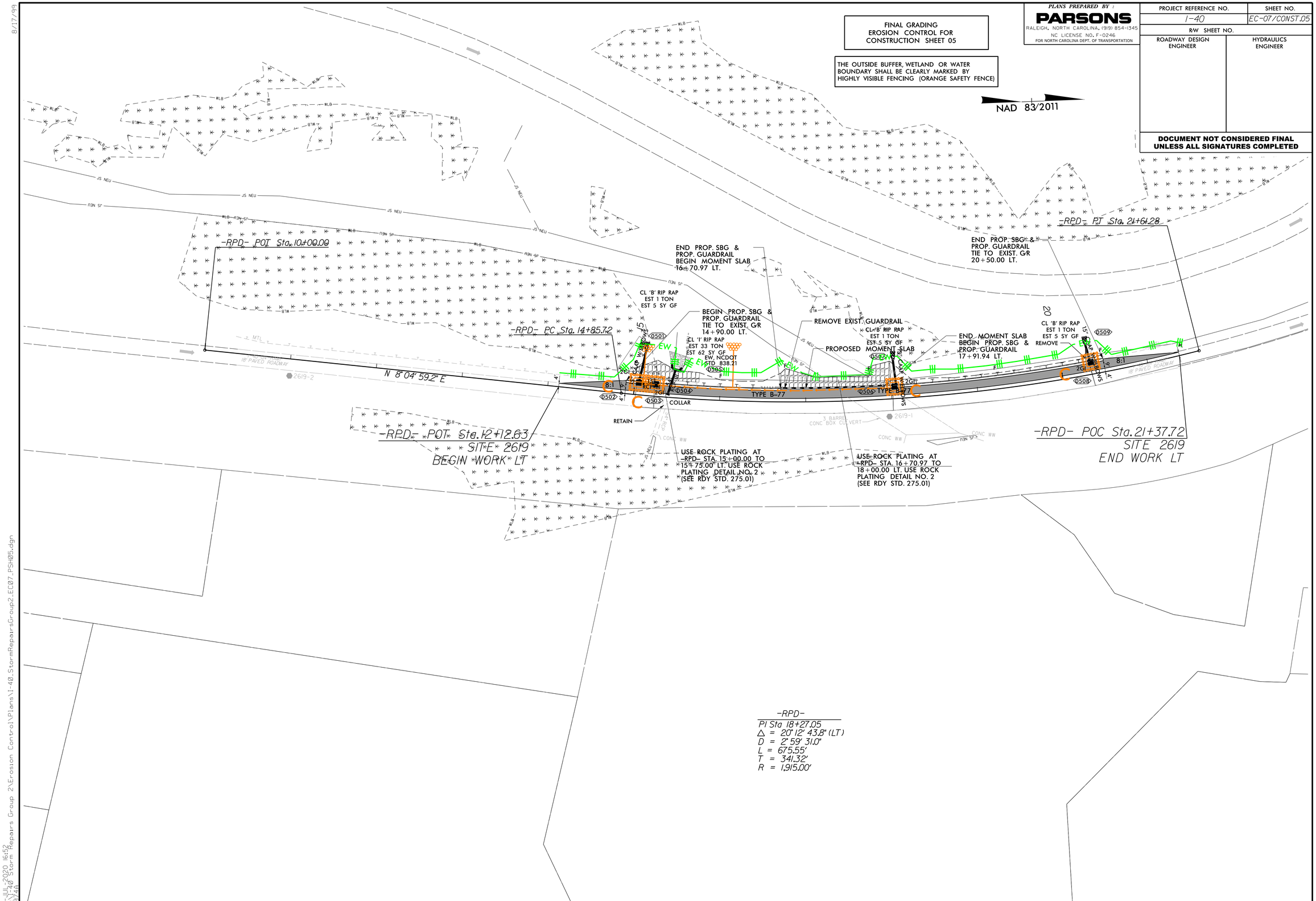

8/17/99

31-JUL-2020 16:52
I-40 Storm Repairs Group 2\Erosion Control\Plans\I-40_StormRepairsGroup2_EC07_PSH05.dgn

STATE OF NORTH CAROLINA
DIVISION OF HIGHWAYS

STATE	STATE PROJECT REFERENCE NO.	SHEET NO.	TOTAL SHEETS
N.C.	I-40	X-1A	30

STATE PROJ. NO.	F.A. PROJ. NO.	DESCRIPTION

CROSS – SECTIONS

SECTIONS	*SHEET NO's.*
CROSS–SECTION TITLE SHEET	*X–1A*
CROSS–SECTION SUMMARY	*X–1B*
STA. 14 + 00.00 –L– TO STA. 15 + 75.00 –L–	*X–1 THRU X–3*
STA. 10 + 25.00 –LPB– TO STA. 15 + 50.00 –LPB–	*X–4 THRU X–13*
STA. 12 + 50.00 –RPB– TO STA. 15 + 50.00 –RPB–	*X–14 THRU X–16*
STA. 11 + 75.00 –RPB_1– TO STA. 16 + 00.00 –RPB_1–	*X–17 THRU X–21*
STA. 14 + 75.00 –RPD– TO STA. 20 + 75.00 –RPD–	*X–22 THRU X–28*

07-AUG-2020 09:05
I-40_Sheet_Roadway
$$$$USERNAME$$$$
Group 2\Roadway\XSC\I-40_RDY_XPL_1A.dgn

PROJECT REFERENCE NO.	SHEET NO.
I-40	X-1B

STATE OF NORTH CAROLINA
DIVISION OF HIGHWAYS

NOTE: EMBANKMENT DOES NOT INCLUDE BACKFILL FOR UNDERCUT

APPROXIMATE QUANTITIES ONLY. UNCLASSIFIED EXCAVATION, SHOULDER BORROW, FINE GRADING, REMOVAL OF EXISTING ASPHALT PAVEMENT, AND CLEARING AND GRUBBING WILL BE PAID FOR AT THE CONTRACT LUMP SUM PRICE FOR "GRADING."

CROSS-SECTION SUMMARY

Station -L-	Uncl. Exc. (cu. yd.)	Embt (cu. yd.)	Station -LPB-	Uncl. Exc. (cu. yd.)	Embt (cu. yd.)	Station -RPB-	Uncl. Exc. (cu. yd.)	Embt (cu. yd.)	Station -RPB_1-	Uncl. Exc. (cu. yd.)	Embt (cu. yd.)	Station -RPD-	Uncl. Exc. (cu. yd.)	Embt (cu. yd.)	Station	Uncl. Exc. (cu. yd.)	Embt (cu. yd.)
14+00.00	0	0	10+25.00	0	0	12+50.00	0	0	11+75.00	0	0	14+75.00	0	0			
14+25.00	0	0	10+50.00	5	0	12+75.00	0	0	12+00.00	0	0	15+00.00	0	0			
14+50.00	20	0	10+75.00	5	0	13+00.00	5	3	12+25.00	11	8	15+25.00	6	7			
14+75.00	6	0	11+00.00	5	0	13+25.00	6	6	12+50.00	12	18	15+50.00	6	10			
15+00.00	6	0	11+25.00	5	0	13+50.00	7	10	12+75.00	10	27	15+75.00	6	5			
15+25.00	5	0	11+50.00	5	0	13+75.00	7	11	13+00.00	10	18	16+00.00	8	1			
15+50.00	5	0	11+75.00	5	0	14+00.00	8	12	13+25.00	12	0	16+25.00	11	0			
15+75.00	5	2	12+00.00	5	0	14+25.00	9	14	13+50.00	12	4	16+50.00	14	0			
			12+25.00	5	0	14+50.00	9	19	13+75.00	12	8	16+75.00	18	0			
			12+50.00	5	0	14+75.00	9	24	14+00.00	8	6	17+00.00	20	0			
			12+75.00	4	0	15+00.00	7	30	14+25.00	3	2	17+25.00	23	0			
			13+00.00	4	0	15+25.00	6	27	14+50.00	3	0	17+50.00	24	0			
			13+25.00	6	12	15+50.00	0	0	14+75.00	4	0	17+75.00	22	0			
			13+50.00	6	12				15+00.00	5	0	18+00.00	17	0			
			13+75.00	5	0				15+25.00	6	0	18+25.00	13	0			
			14+00.00	5	0				15+50.00	7	0	18+50.00	14	0			
			14+25.00	5	0				15+75.00	9	0	18+75.00	13	0			
			14+50.00	4	0				16+00.00	9	1	19+00.00	11	0			
			14+75.00	10	20							19+25.00	10	0			
			15+00.00	17	30							19+50.00	10	0			
			15+25.00	18	16							19+75.00	10	0			
			15+50.00	0	0							20+00.00	10	0			
												20+25.00	9	0			
												20+50.00	9	0			
												20+75.00	0	0			

8/17/99
07-AUG-2020 08:44
U:\40_Corridors Group 2\Roadway\XSC\I-40_RDY_XPL_1B.dgn
$$$$USERNAME$$$$

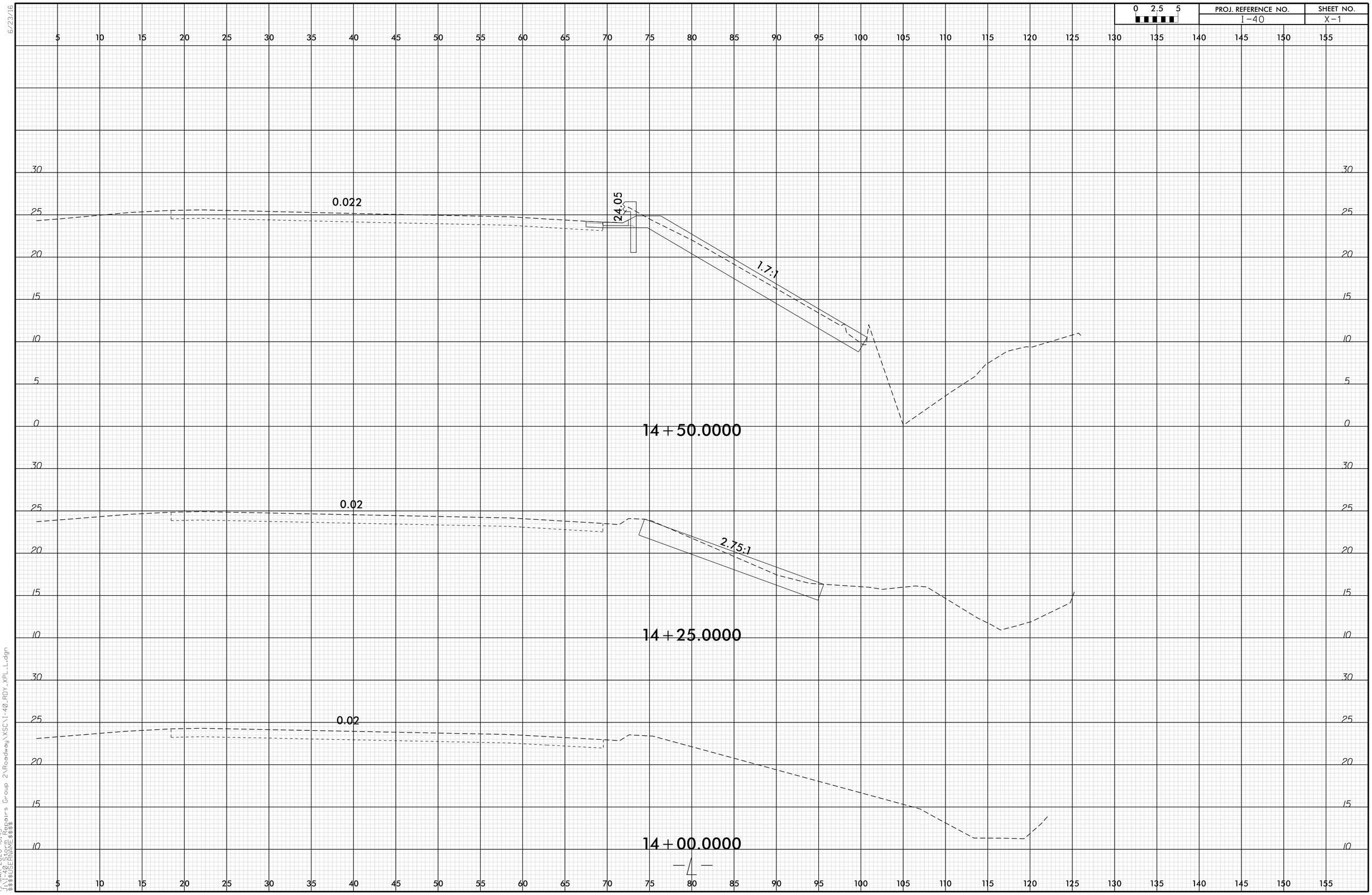

6/23/16
19-MAR-2020 10:45
I:\40_Repairs Group 2\Roadway\XSC\I-40_RDY_XPL_LL.dgn
$$$$USERNAME$$$$

0 2.5 5	PROJ. REFERENCE NO.	SHEET NO.
	I-40	X-2

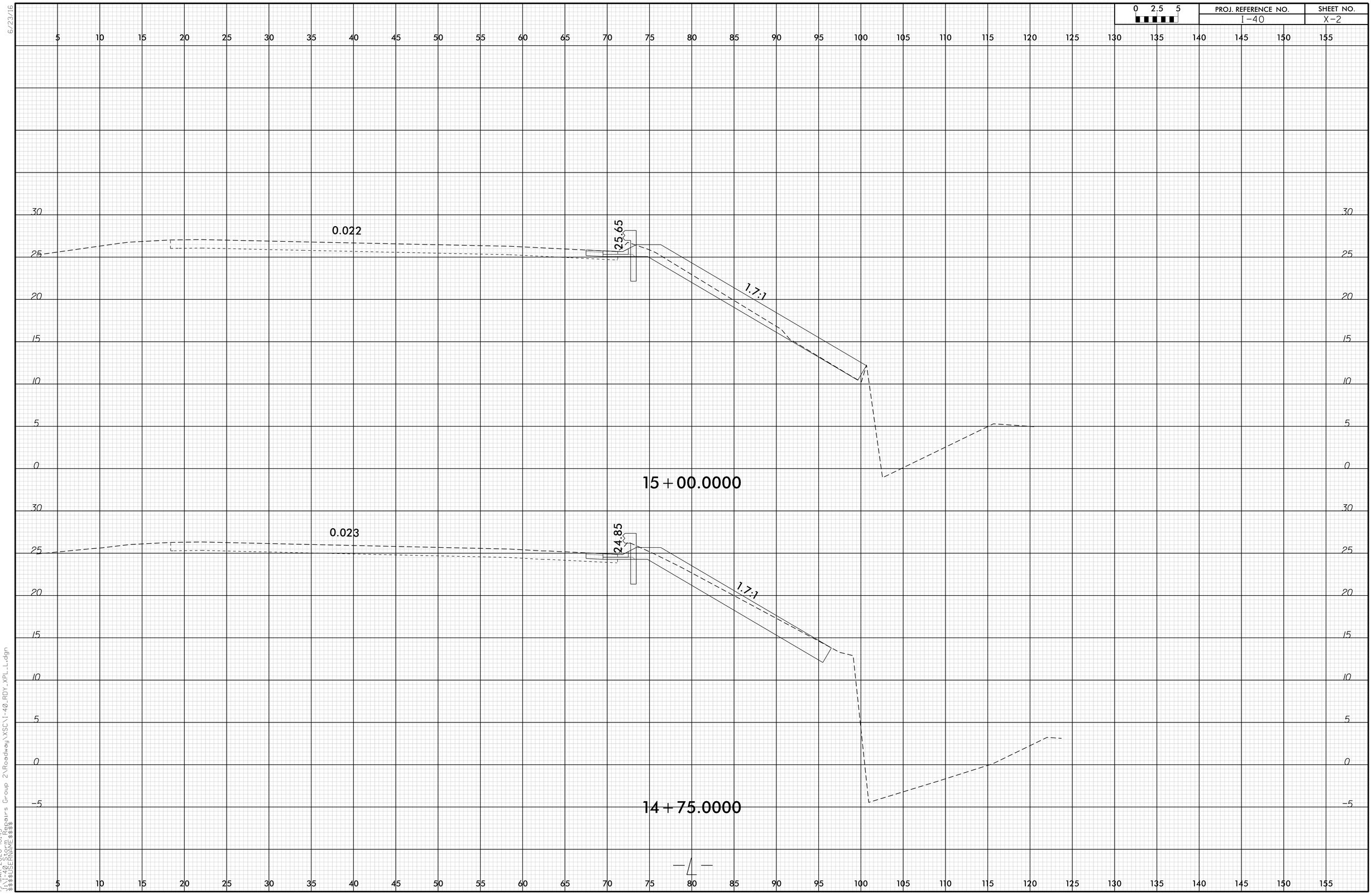

0 2.5 5	PROJ. REFERENCE NO.	SHEET NO.
	I-40	X-3

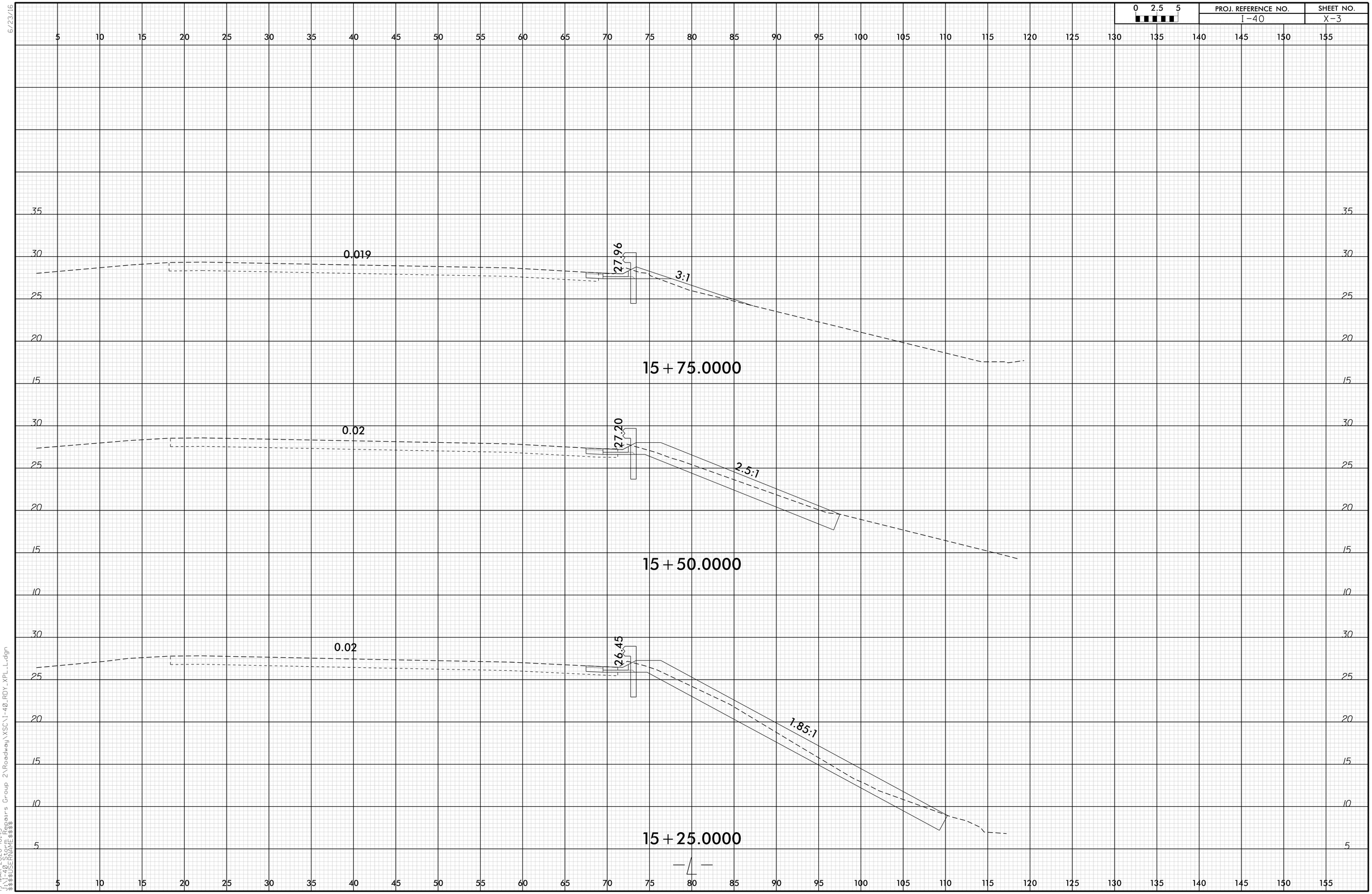

6/23/16
19-MAR-2020 10:45
J:\MAP\SCO\Repairs Group 2\Roadway\XSC\I-40_RDY_XPL_L.dgn
$$$$USERNAME$$$$

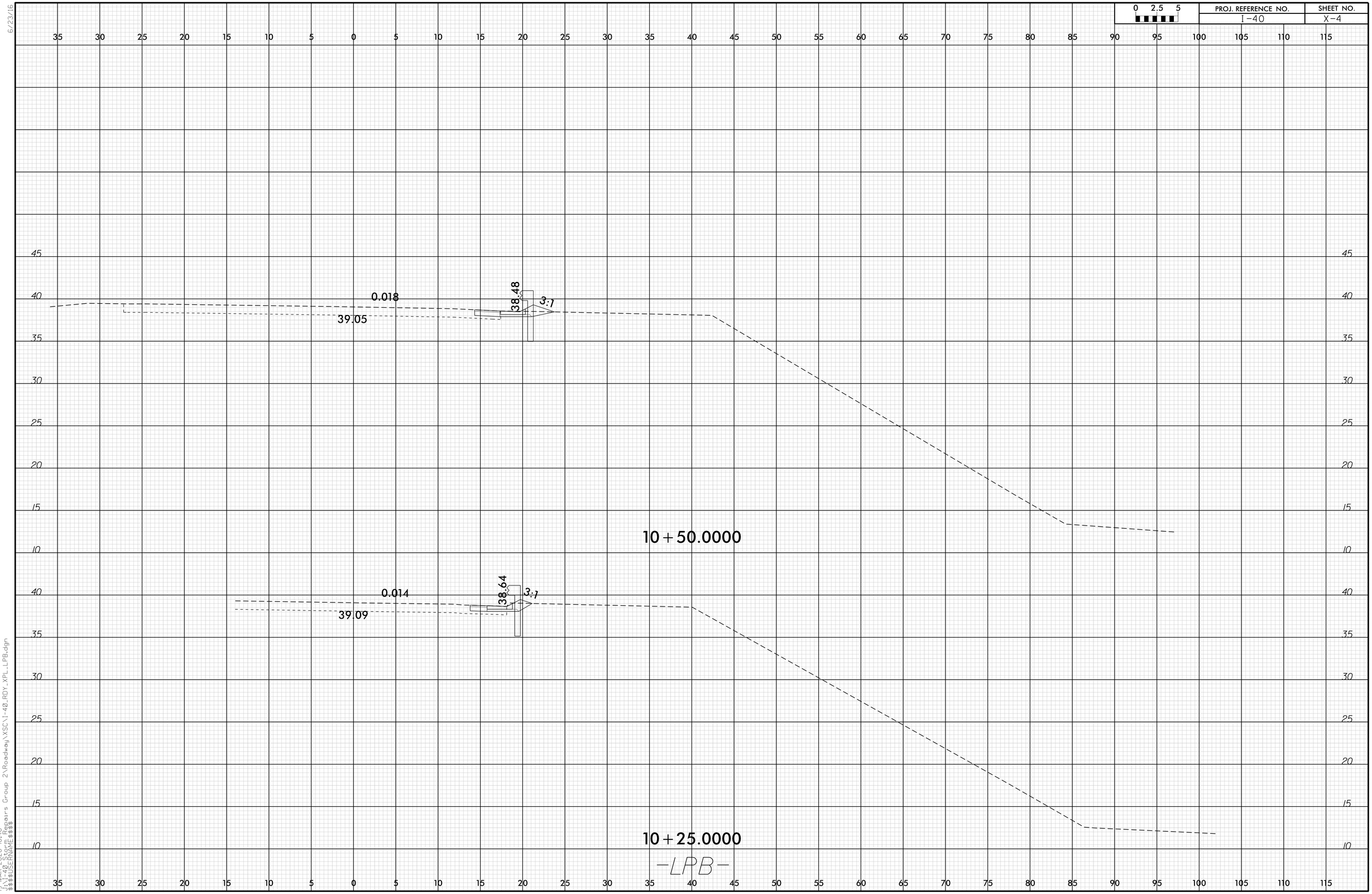

6/23/16
19-MAR-2020 10:46
J:\I-40 Repairs Group 2\Roadway\XSC\I-40_RDY_XPL_LPB.dgn
$$$$USERNAME$$$$

6/23/16

0 2.5 5	PROJ. REFERENCE NO.	SHEET NO.
	I-40	X-5

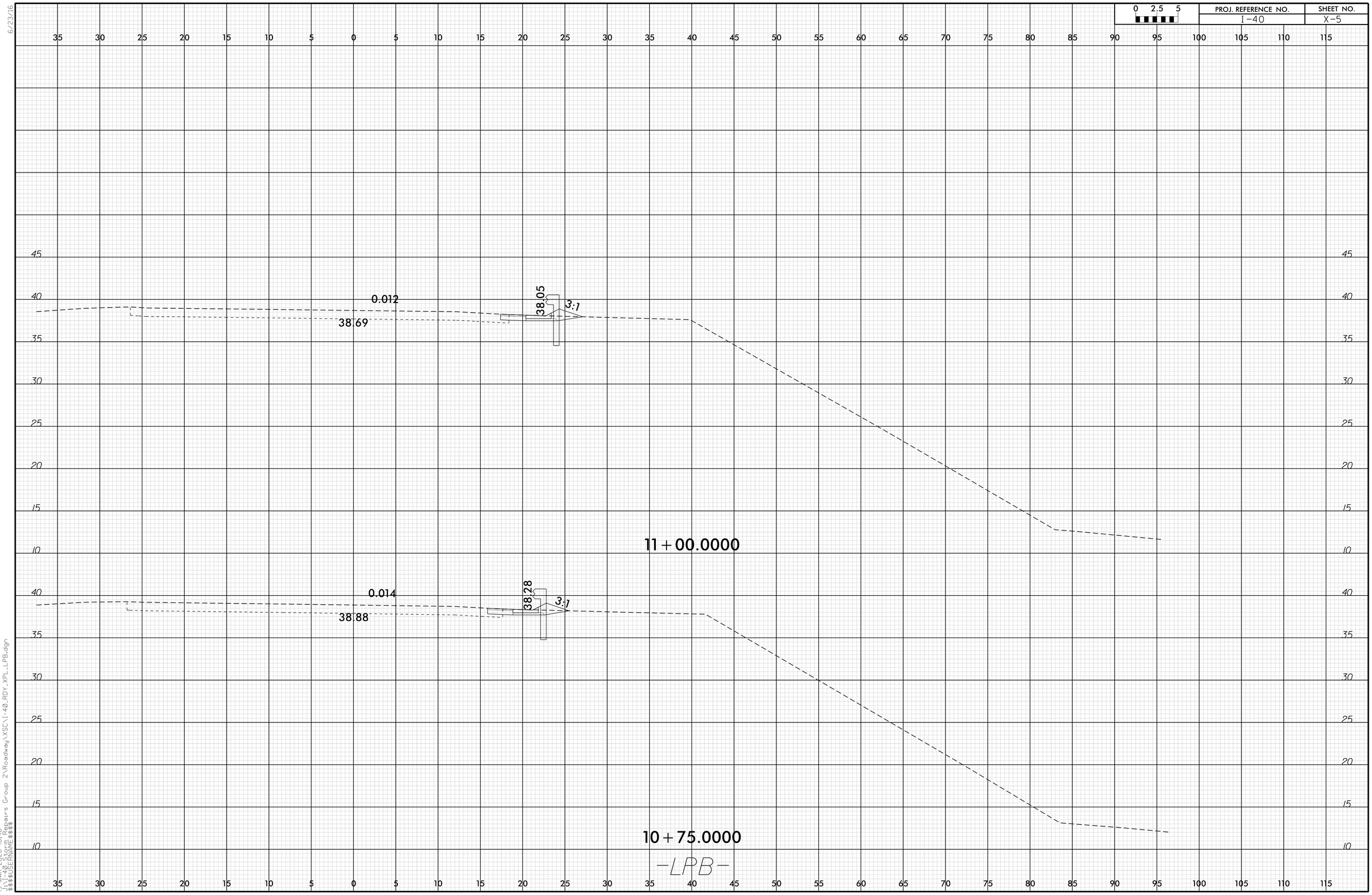

19-MAR-2020 10:46
J:\WAD\Repairs Group 2\Roadway\XSC\I-40_RDY_XPL_LPB.dgn
$$$$USERNAME$$$$

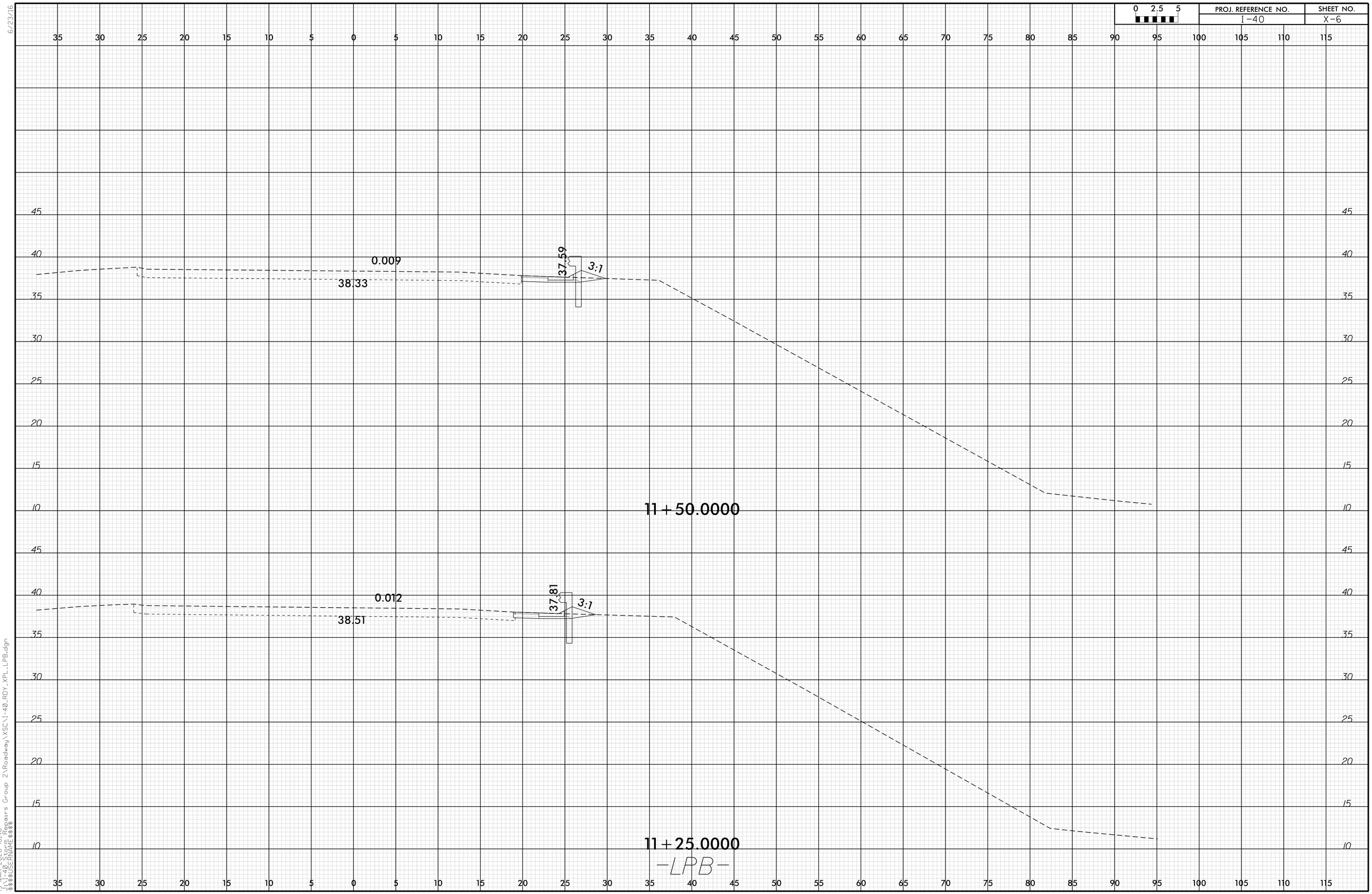

6/23/16
19-MAR-2020 10:46
I:\40120\Repairs Group 2\Roadway\XSC\I-40_RDY_XPL_LPB.dgn
$$$$USERNAME$$$$

6/23/16

0 2.5 5	PROJ. REFERENCE NO.	SHEET NO.
	I-40	X-7

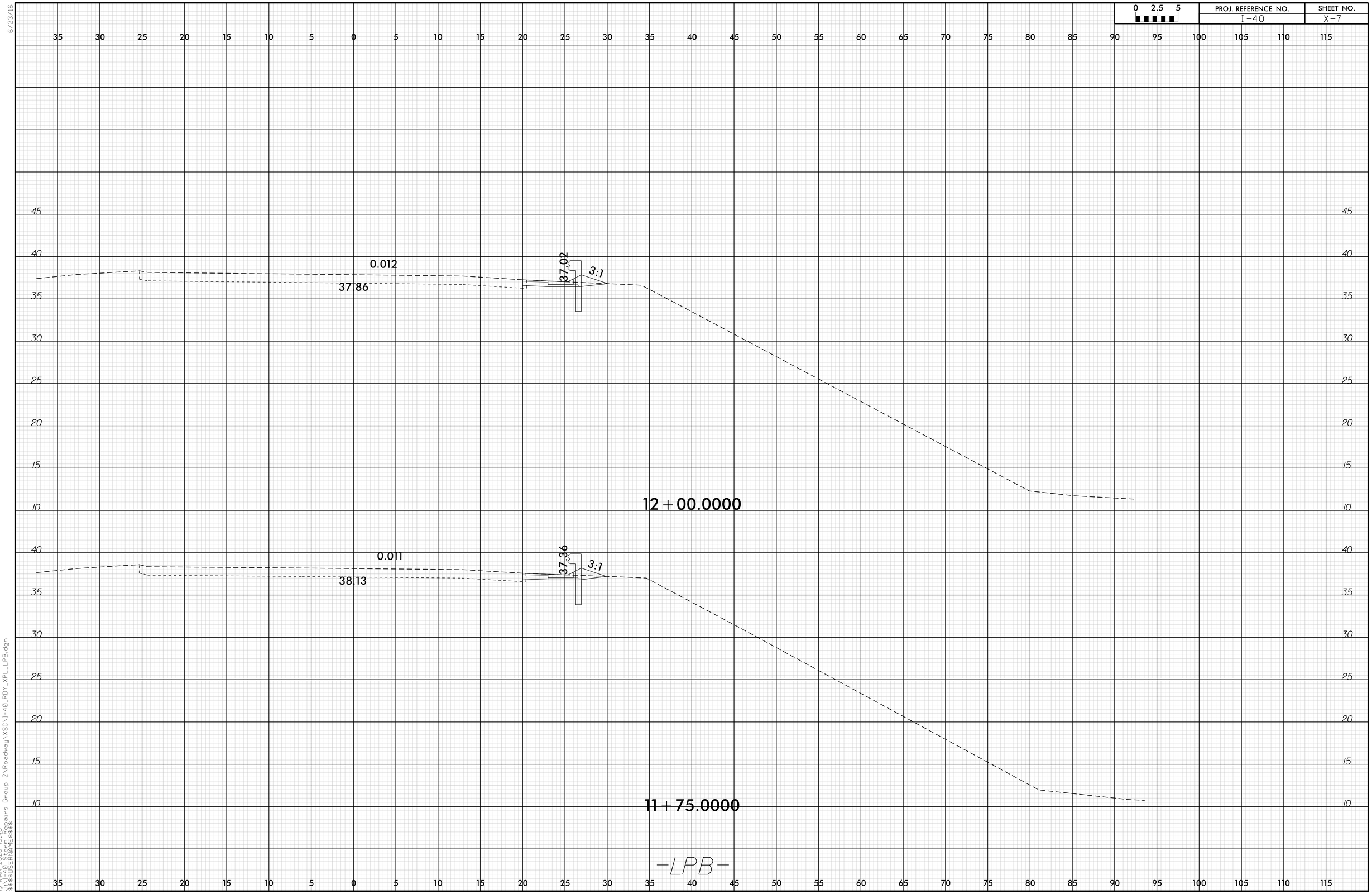

19-MAR-2020 10:46
$$$$USERNAME$$$$ Roars Group 2\Roadway\XSC\I-40_RDY_XPL_LPB.dgn

6/23/16

0 2.5 5	PROJ. REFERENCE NO.	SHEET NO.
	I-40	X-8

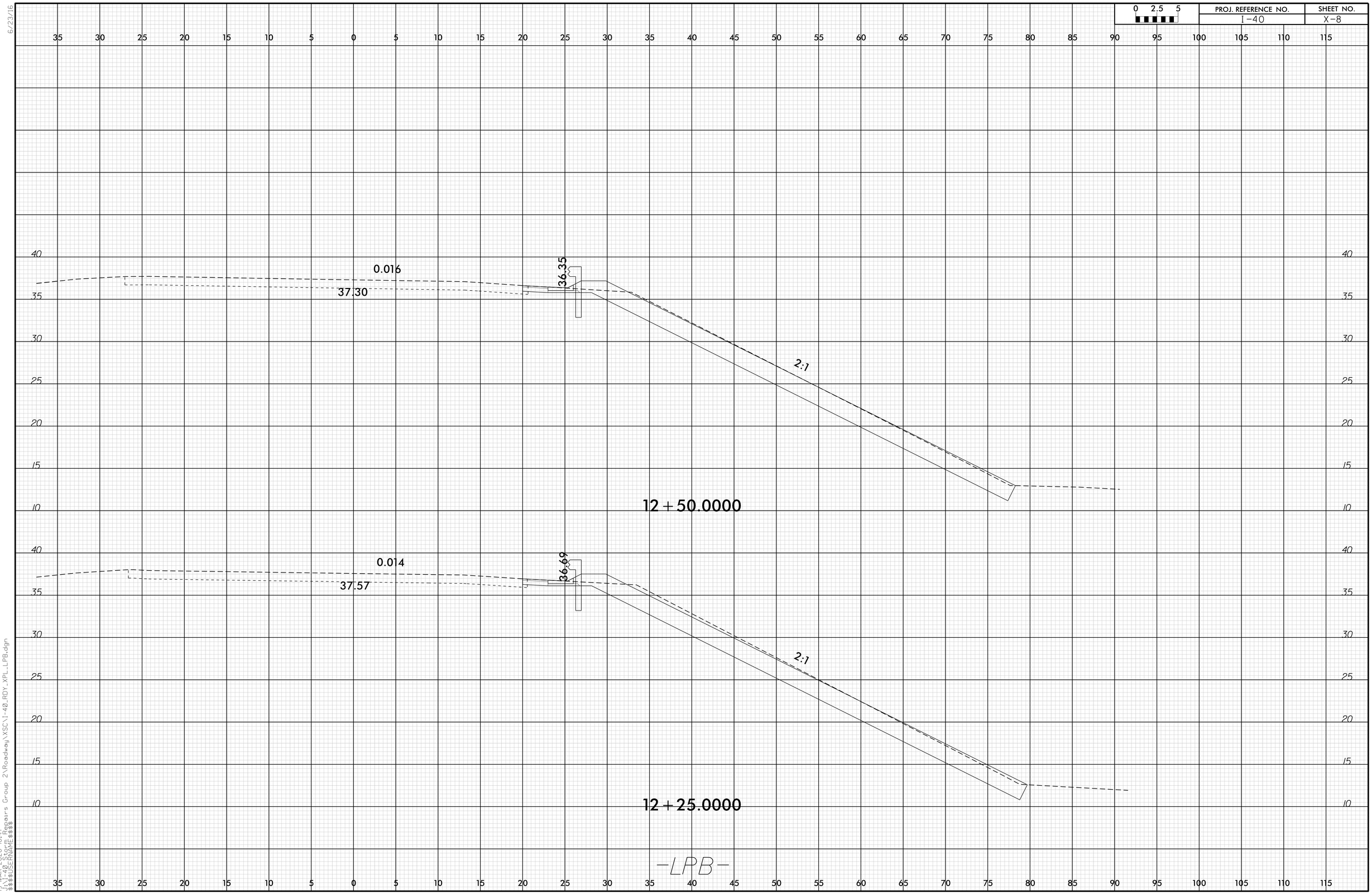

19-MAR-2020 10:47
I-40_Guardrail Repairs Group 2\Roadway\XSCVI-40_RDY_XPL_LPB.dgn
$$$$USERNAME$$$$

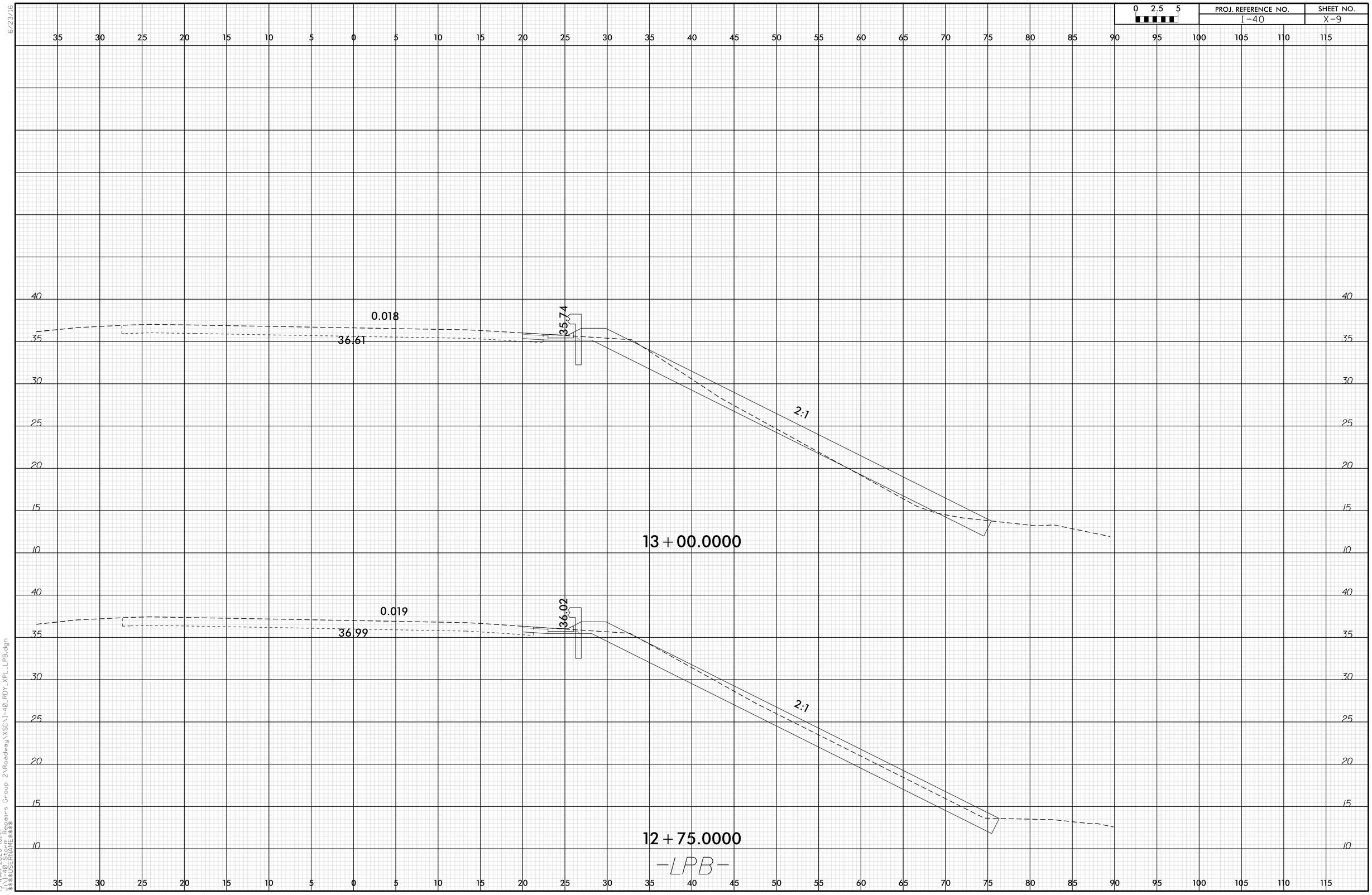

6/23/16
19-MAR-2020 10:47
I:\WAD\2020\Repairs Group 2\Roadway\XSCVI-40_RDY_XPL_LPB.dgn
$$$$USERNAME$$$$

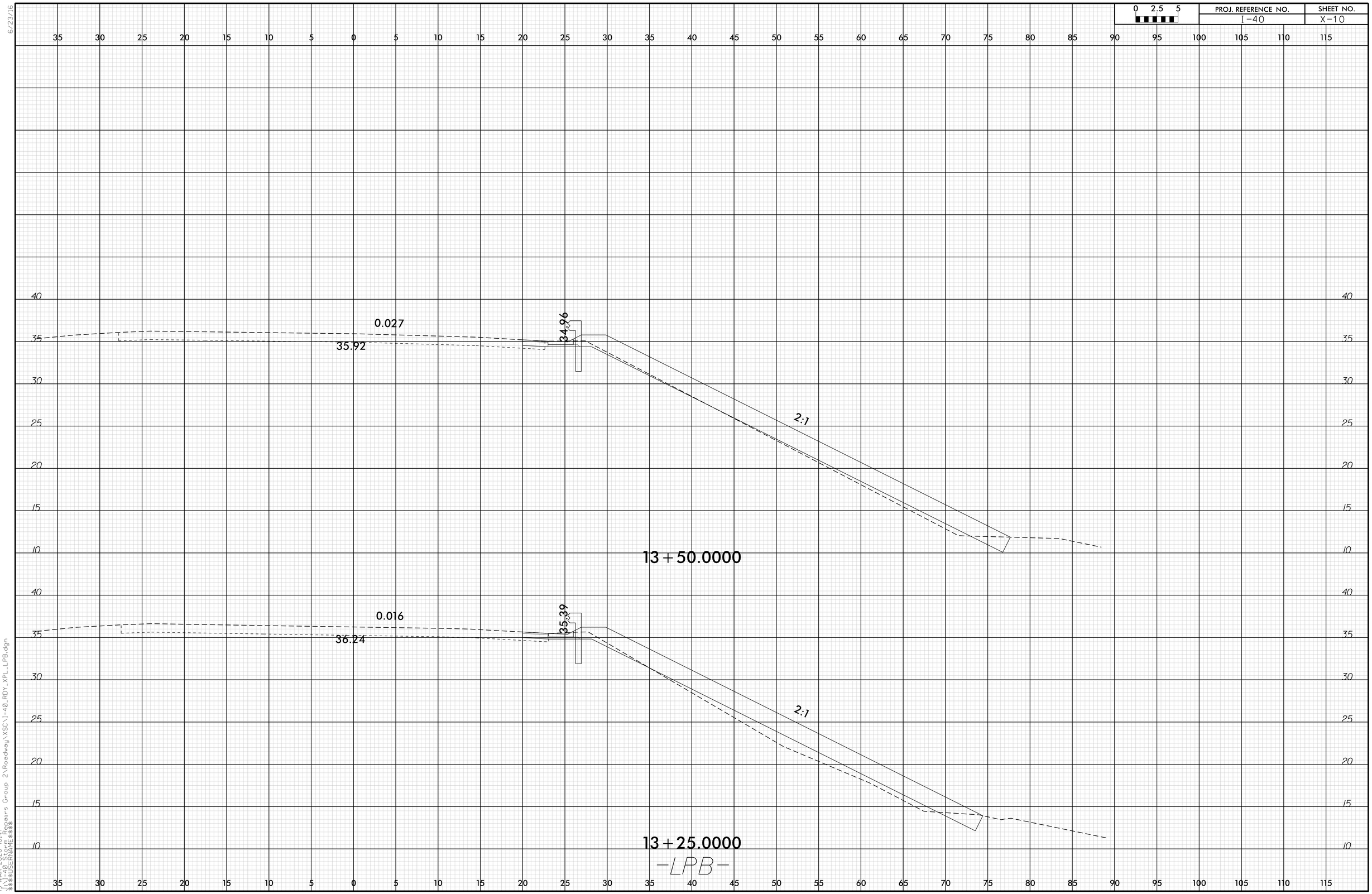

6/23/16
19-MAR-2020 10:47
I-40 Slope Repairs Group 2\Roadway\XSCV1-40_RDY_XPL_LPB.dgn
$$$$USERNAME$$$$

6/23/16

0 2.5 5	PROJ. REFERENCE NO.	SHEET NO.
	I-40	X-11

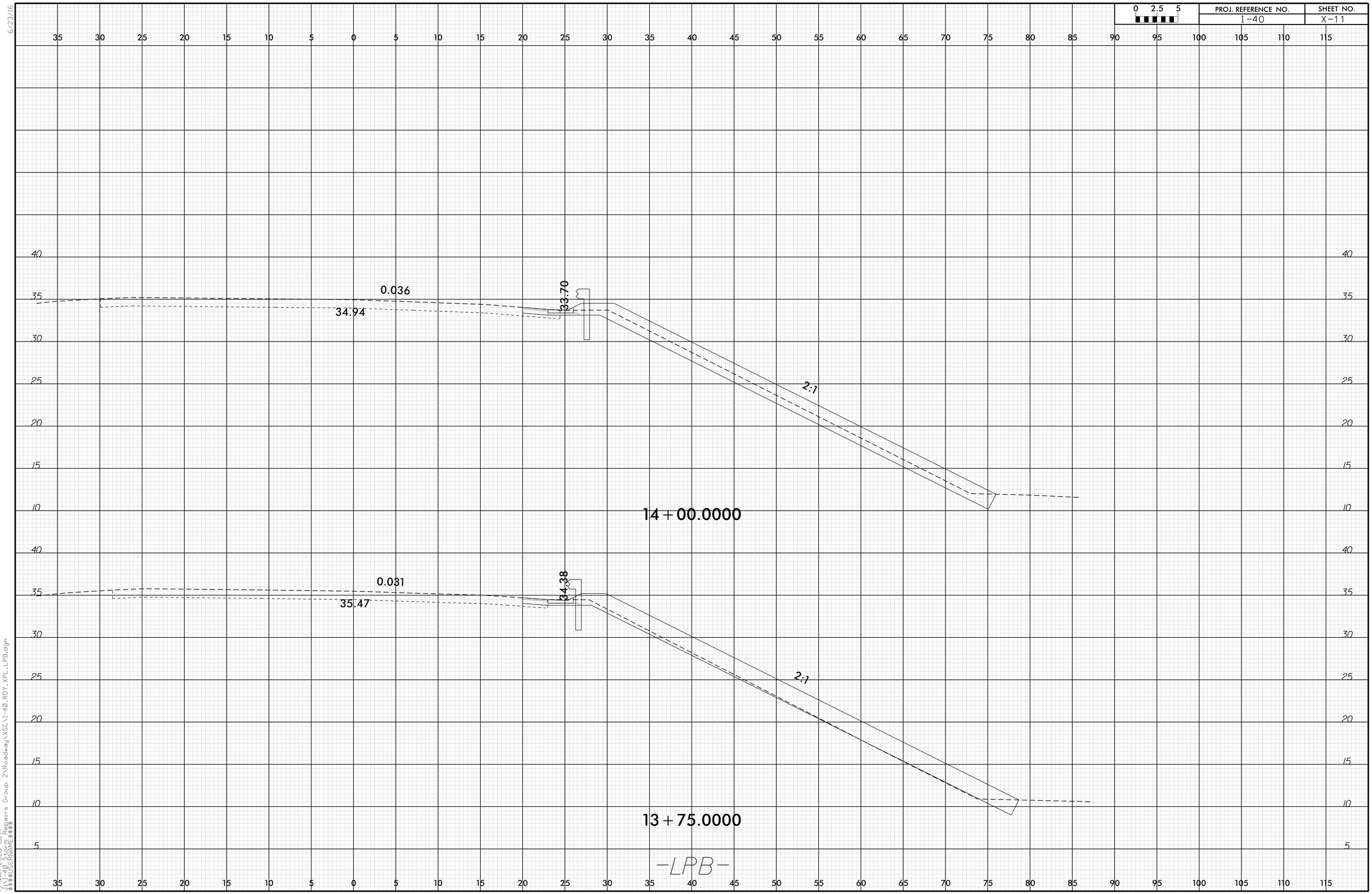

19-MAR-2020 10:47
I:\40_Repairs Group 2\Roadway\XSC\I-40_RDY_XPL_LPB.dgn
$$$$USERNAME$$$$

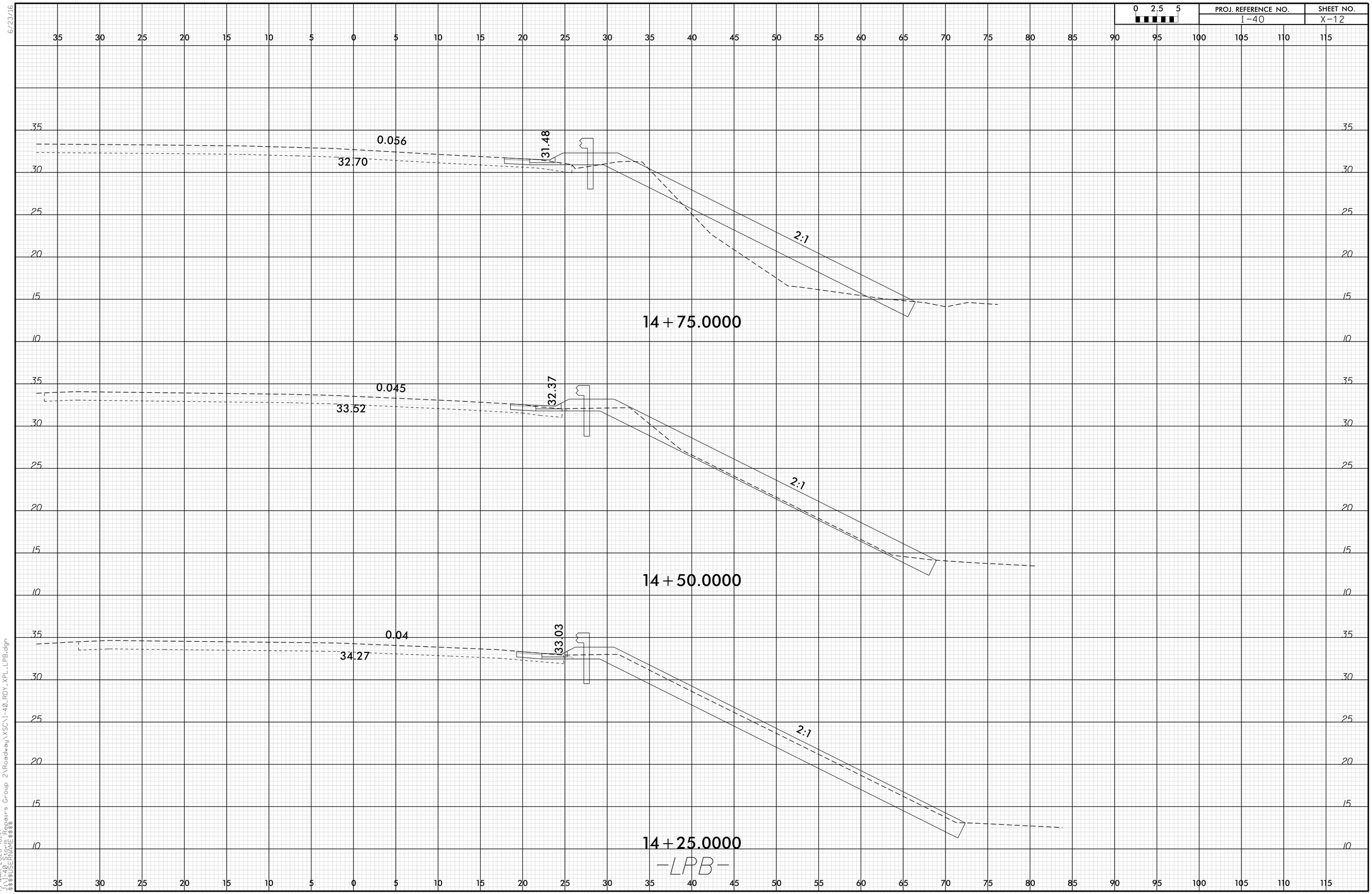

6/23/16
19-MAR-2020 10:47
I-40 Guardrail Repairs Group 2\Roadway\XSCV1-40_RDY_XPL_LPB.dgn
$$$$USERNAME$$$$

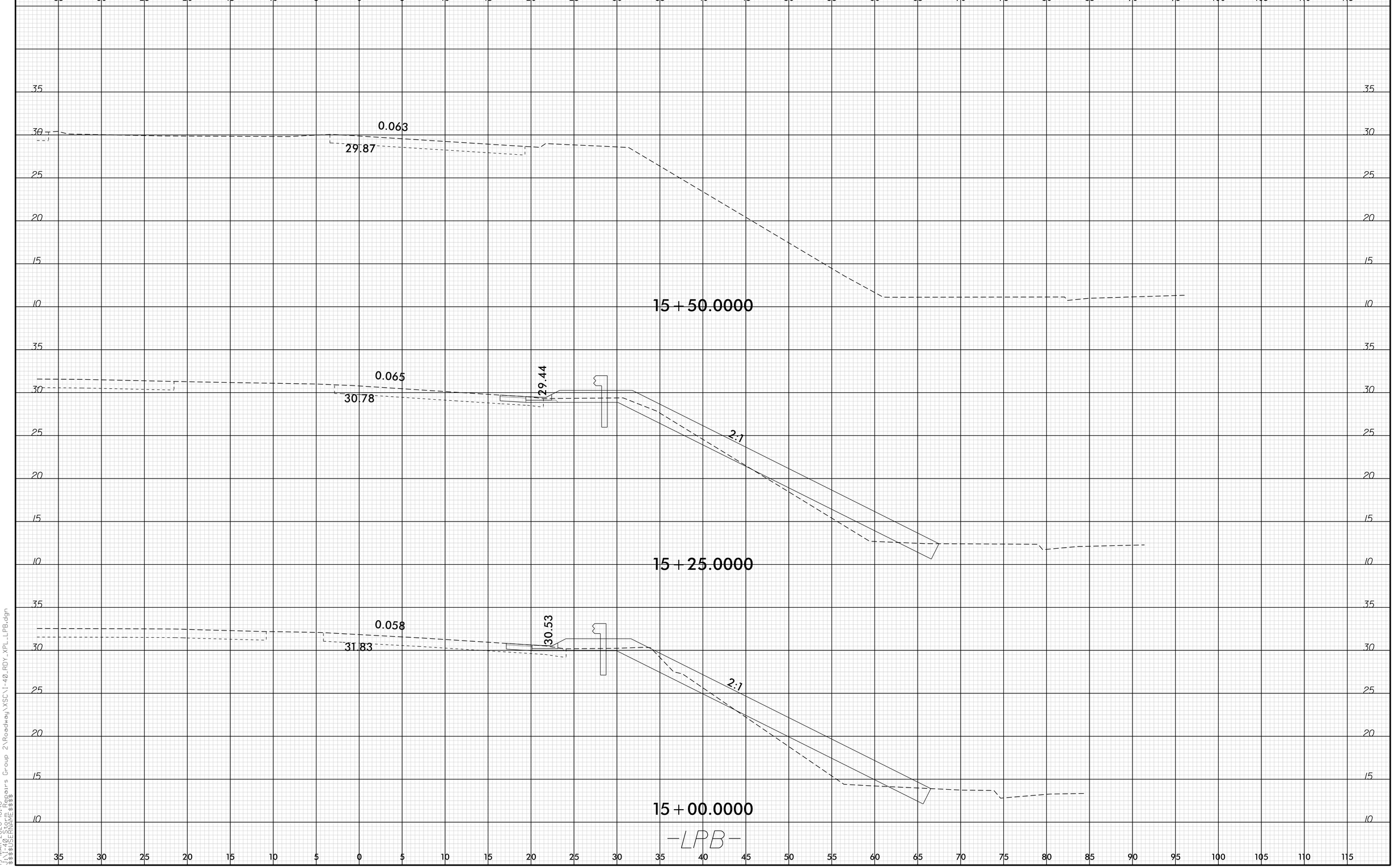

6/23/16
19-MAR-2020 10:48
$$$$USERNAME$$$$
J:\4027_Repairs Group 2\Roadway\XSC\I-40_RDY_XPL_LPB.dgn

6/23/16

0 2.5 5	PROJ. REFERENCE NO.	SHEET NO.
	I-40	X-14

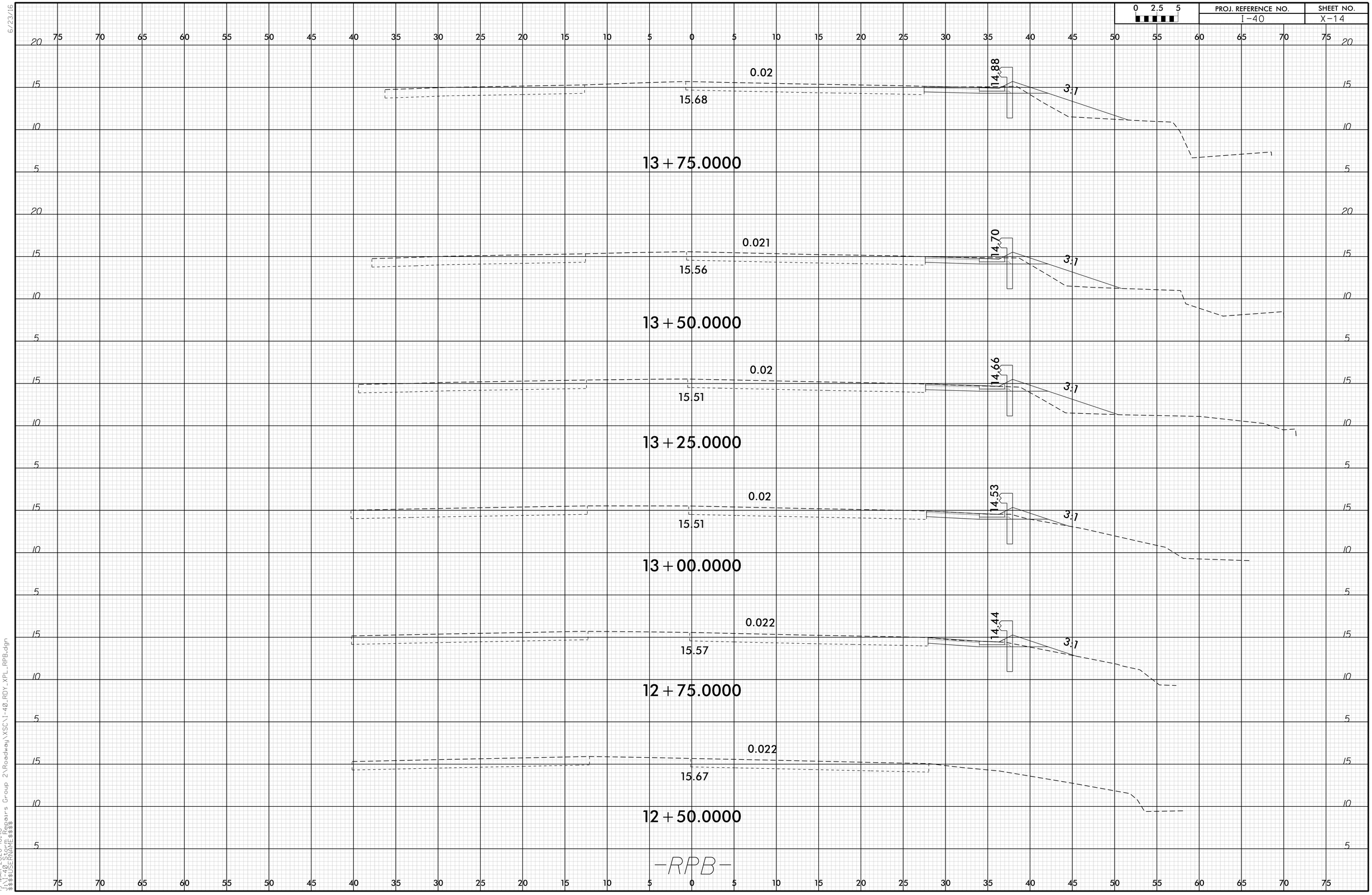

19-MAR-2020 10:48
J:\MAPS\SR20_PE\Repairs Group 2\Roadway\XSCV1-40_RDY_XPL_RPB.dgn
$$$$USERNAME$$$$

0 2.5 5	PROJ. REFERENCE NO.	SHEET NO.
	I-40	X-15

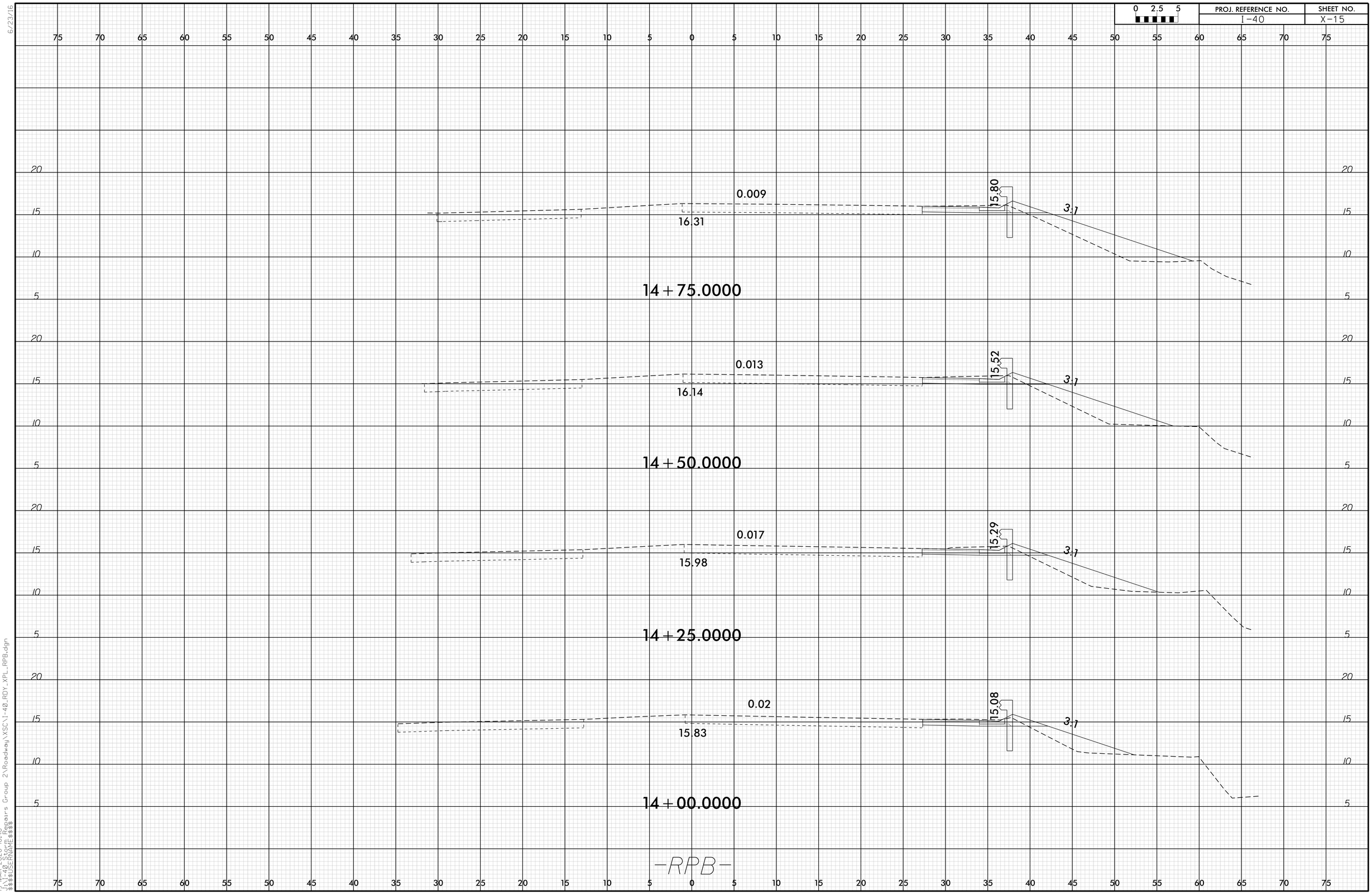

6/23/16
19-MAR-2020 10:48
I:\40_Repairs Group 2\Roadway\XSC\I-40_RDY_XPL_RPB.dgn
$$$$USERNAME$$$$

6/23/16

0 2.5 5	PROJ. REFERENCE NO.	SHEET NO.
	I-40	X-16

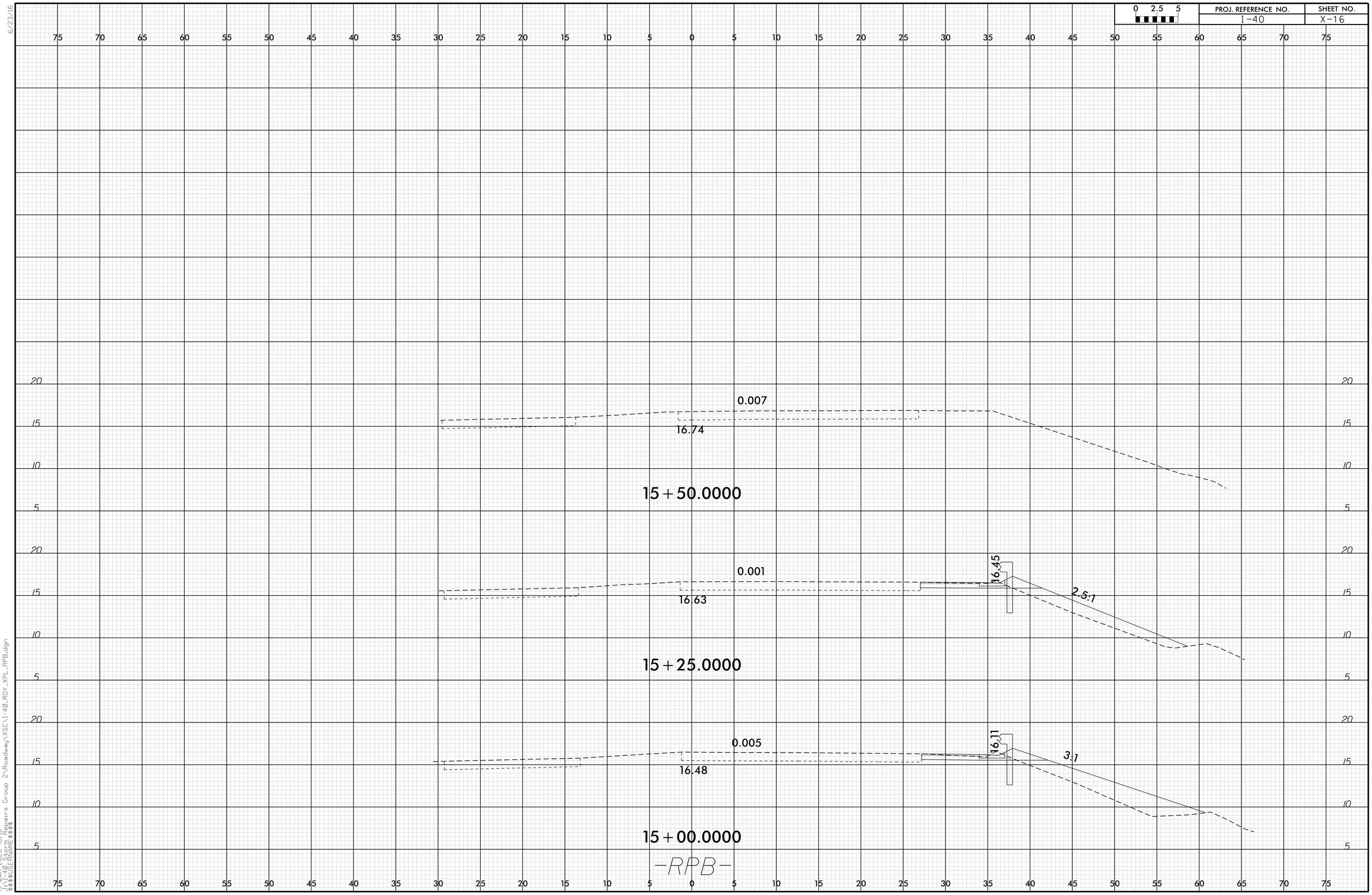

19-MAR-2020 10:48
I:\40_Repairs Group 2\Roadway\XSC\I-40_RDY_XPL_RPB.dgn
$$$$USERNAME$$$$

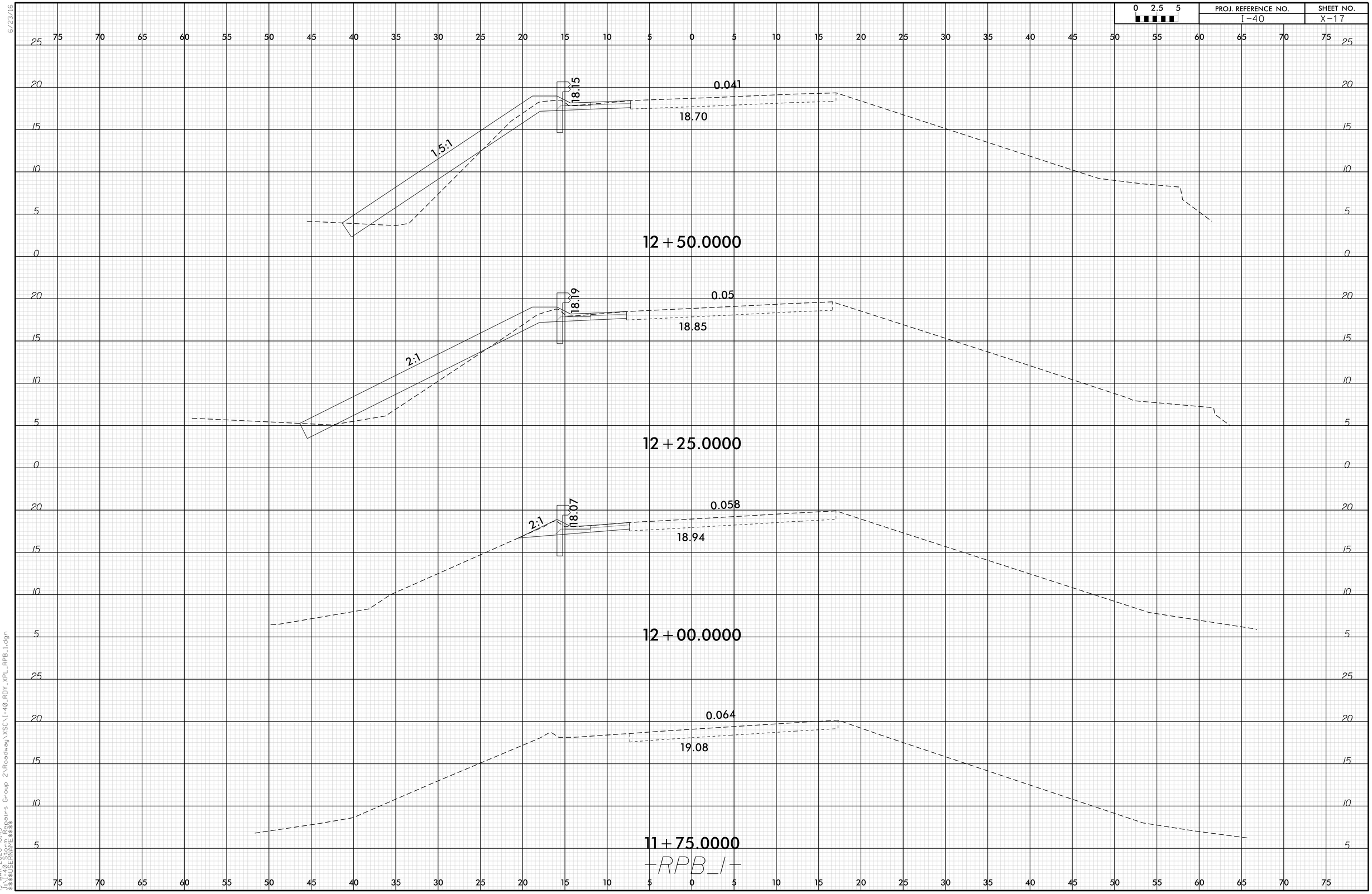

6/23/16
19-MAR-2020 10:49
J:\MAP\2020 PROJECTS\Repairs Group 2\Roadway\XSCV1-40_RDY_XPL_RPB_1.dgn
$$$$USERNAME$$$$

6/23/16

0 2.5 5	PROJ. REFERENCE NO.	SHEET NO.
	I-40	X-18

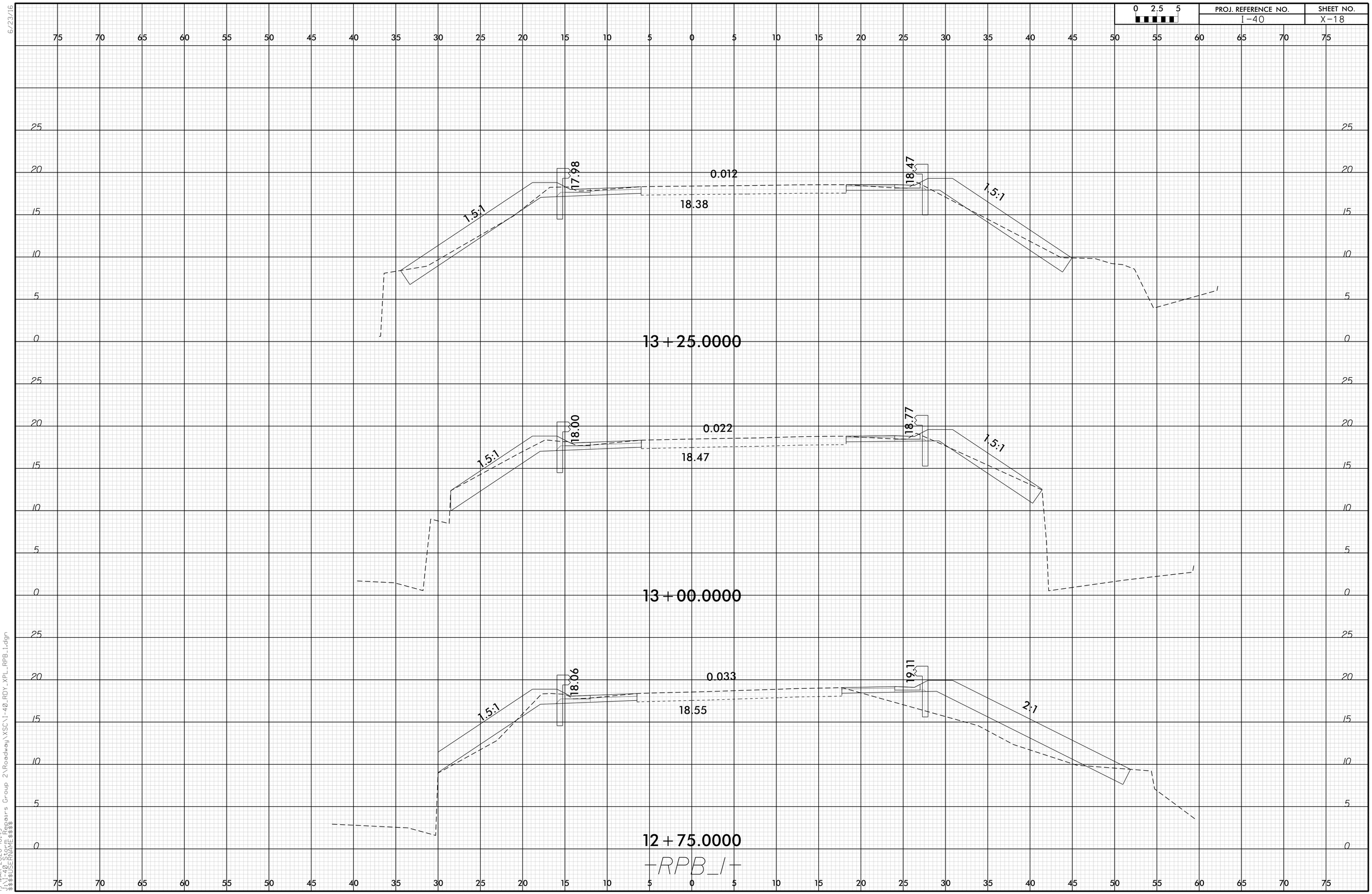

19-MAR-2020 10:49
J:\Projects\Repairs Group 2\Roadway\XSC\I-40_RDY_XPL_RPB_1.dgn
$$$$USERNAME$$$$

PROJ. REFERENCE NO.	SHEET NO.
I-40	X-19

0 2.5 5

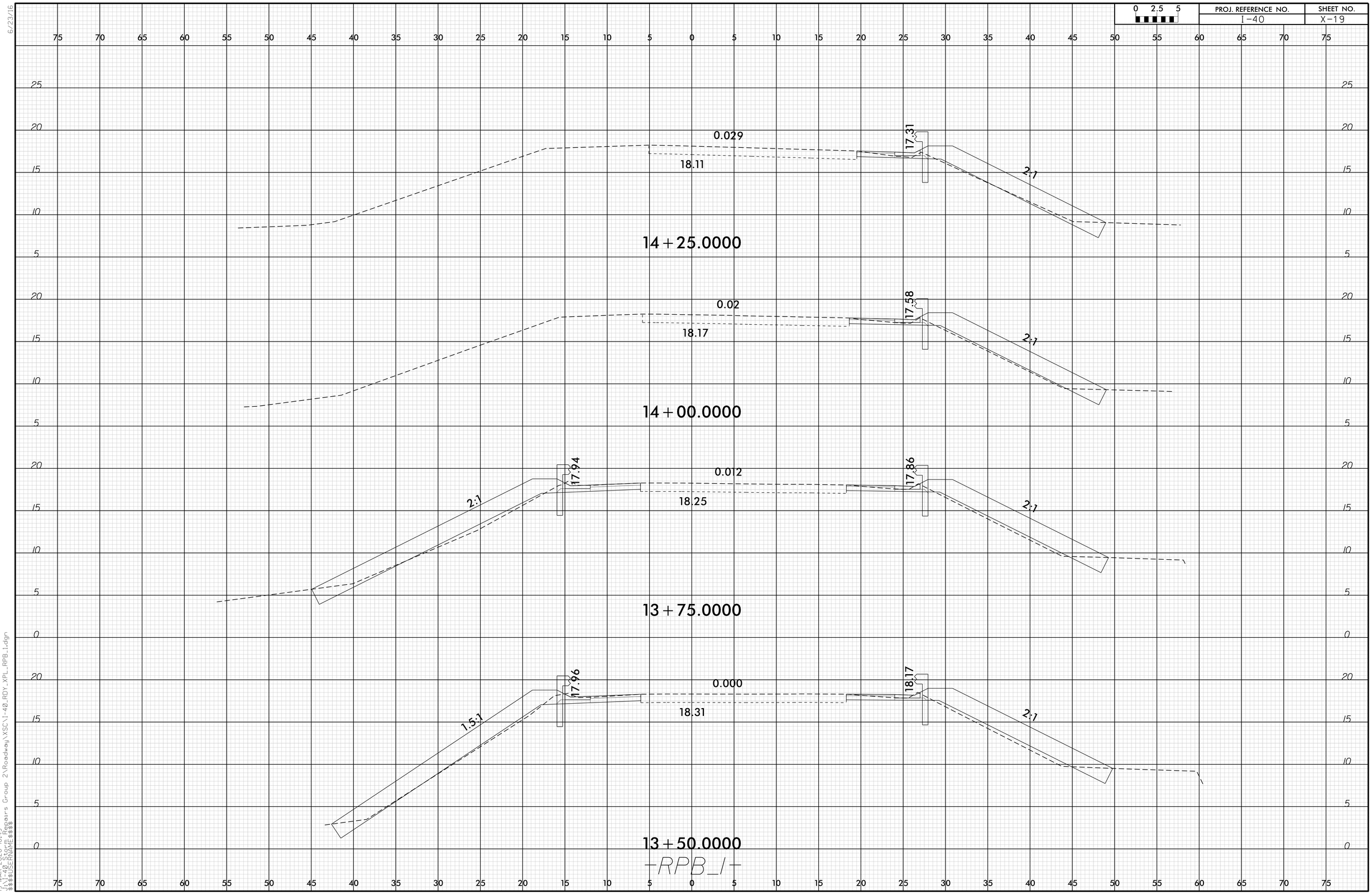

6/23/16

19-MAR-2020 10:49
I:\40_Design_Repairs Group 2\Roadway\XSC\I-40_RDY_XPL_RPB_1.dgn
$$$$USERNAME$$$$

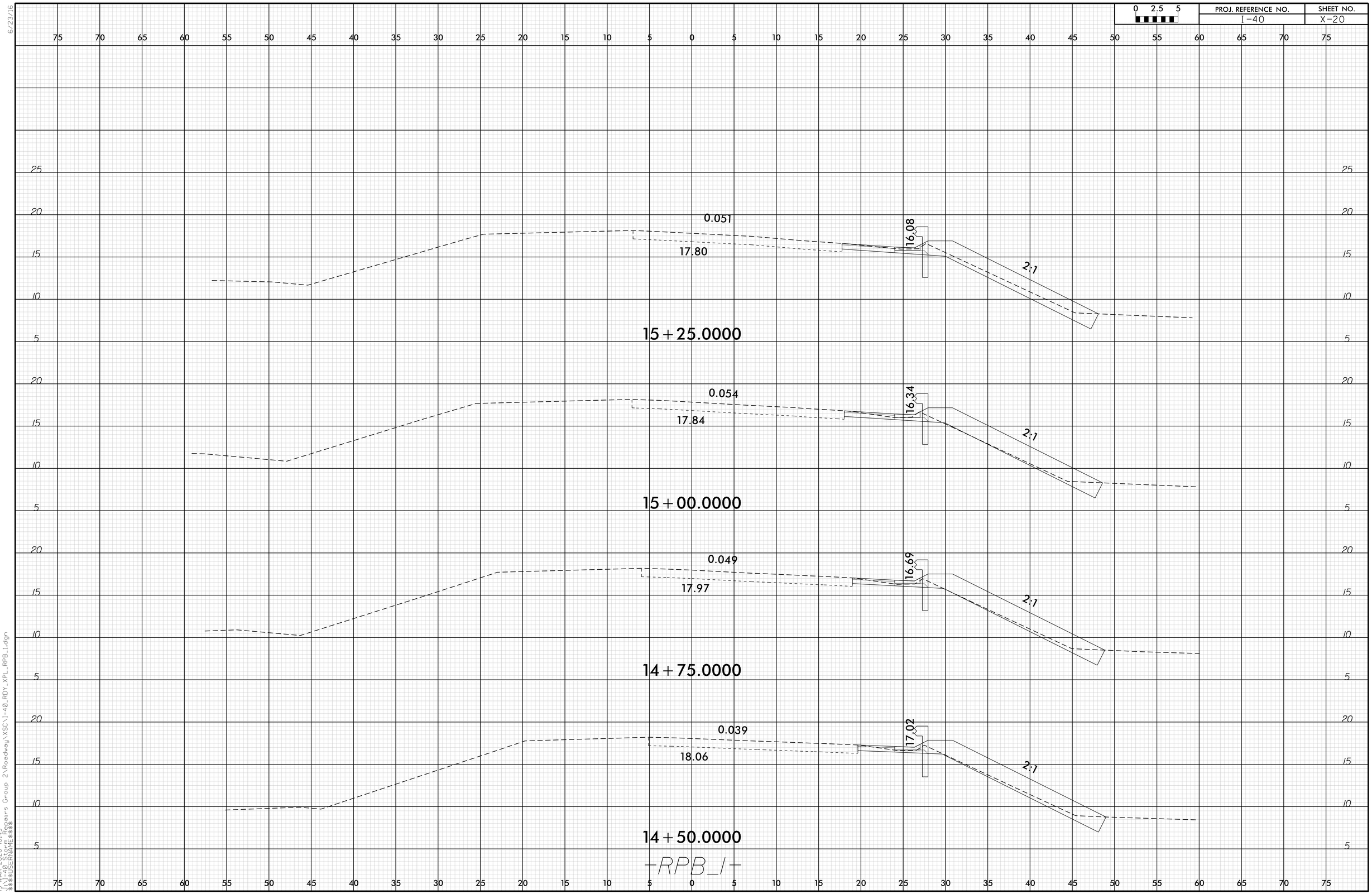

6/23/16
19-MAR-2020 10:49
J:\MAP\2020\Rogers Group 2\Roadway\XSC\I-40_RDY_XPL_RPB_1.dgn
$$$$USERNAME$$$$

6/23/16

0 2.5 5	PROJ. REFERENCE NO.	SHEET NO.
	I-40	X-21

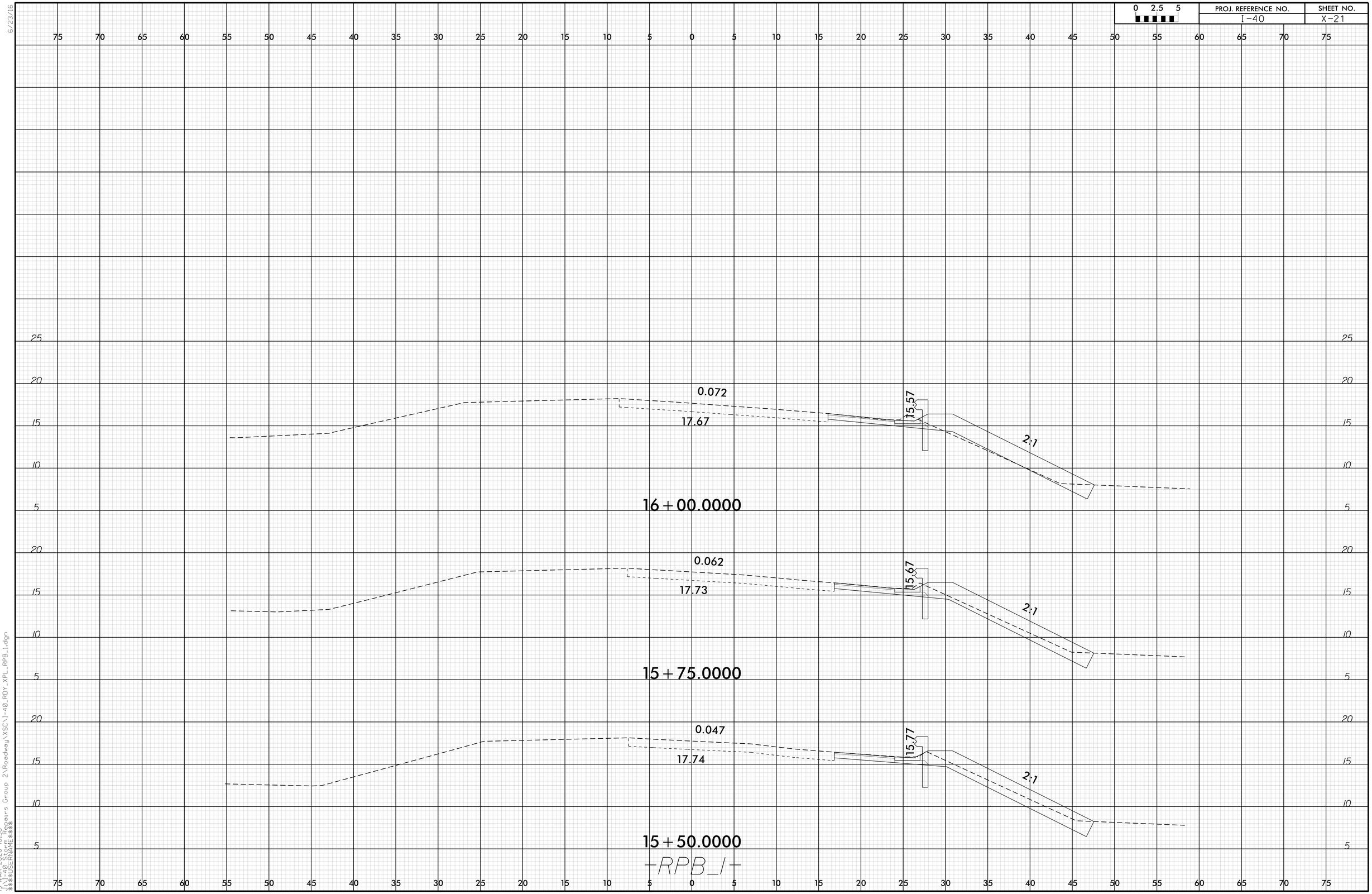

19-MAR-2020 10:50
J:\I40_Guardrail Repairs Group 2\Roadway\XSC\I-40_RDY_XPL_RPB_1.dgn
$$$$USERNAME$$$$

0 2.5 5	PROJ. REFERENCE NO.	SHEET NO.
	I-40	X-22

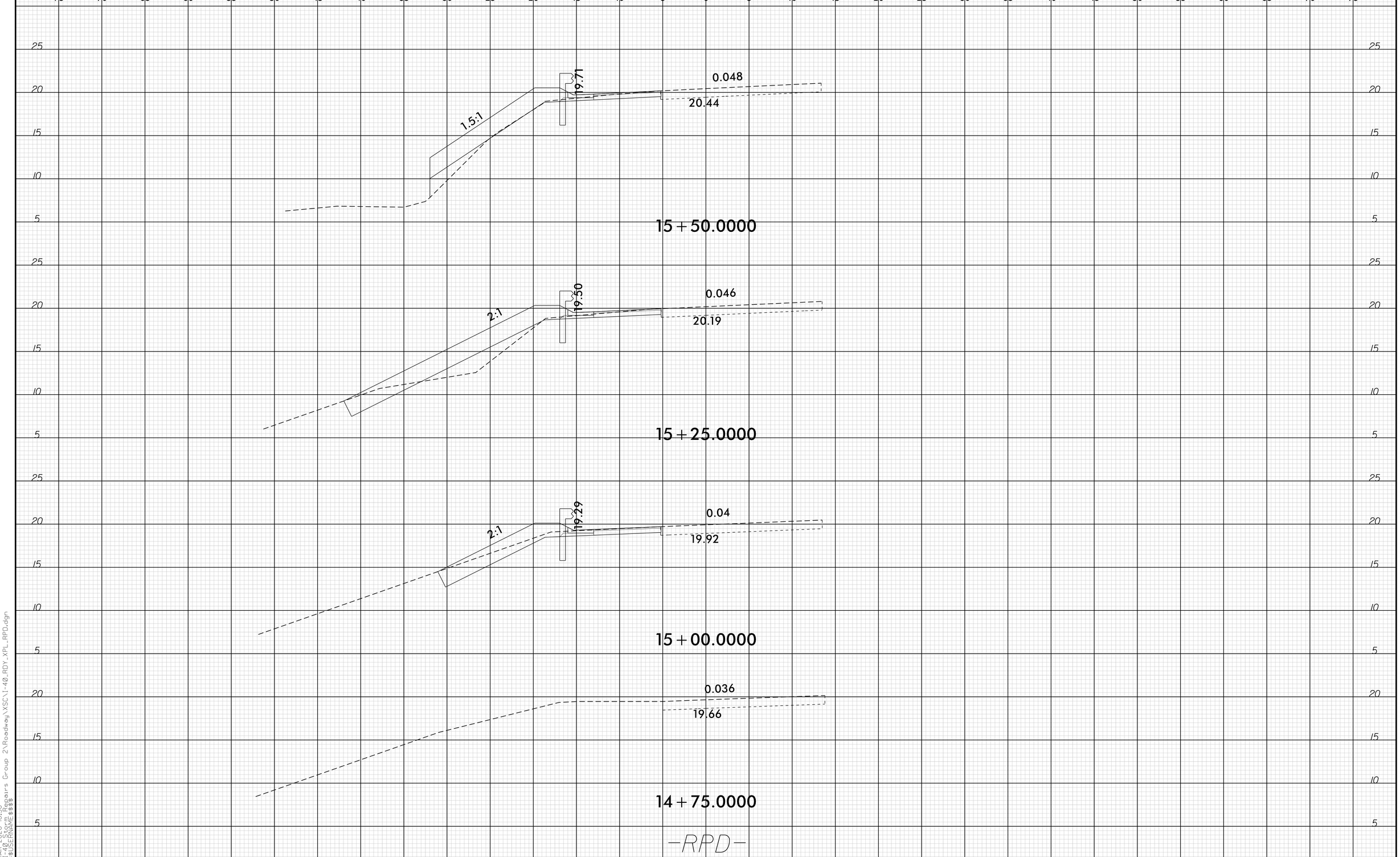

6/23/16

19-MAR-2020 10:50
J:\I40_Repairs Group 2\Roadway\XSC\I-40_RDY_XPL_RPD.dgn
$$$$USERNAME$$$$

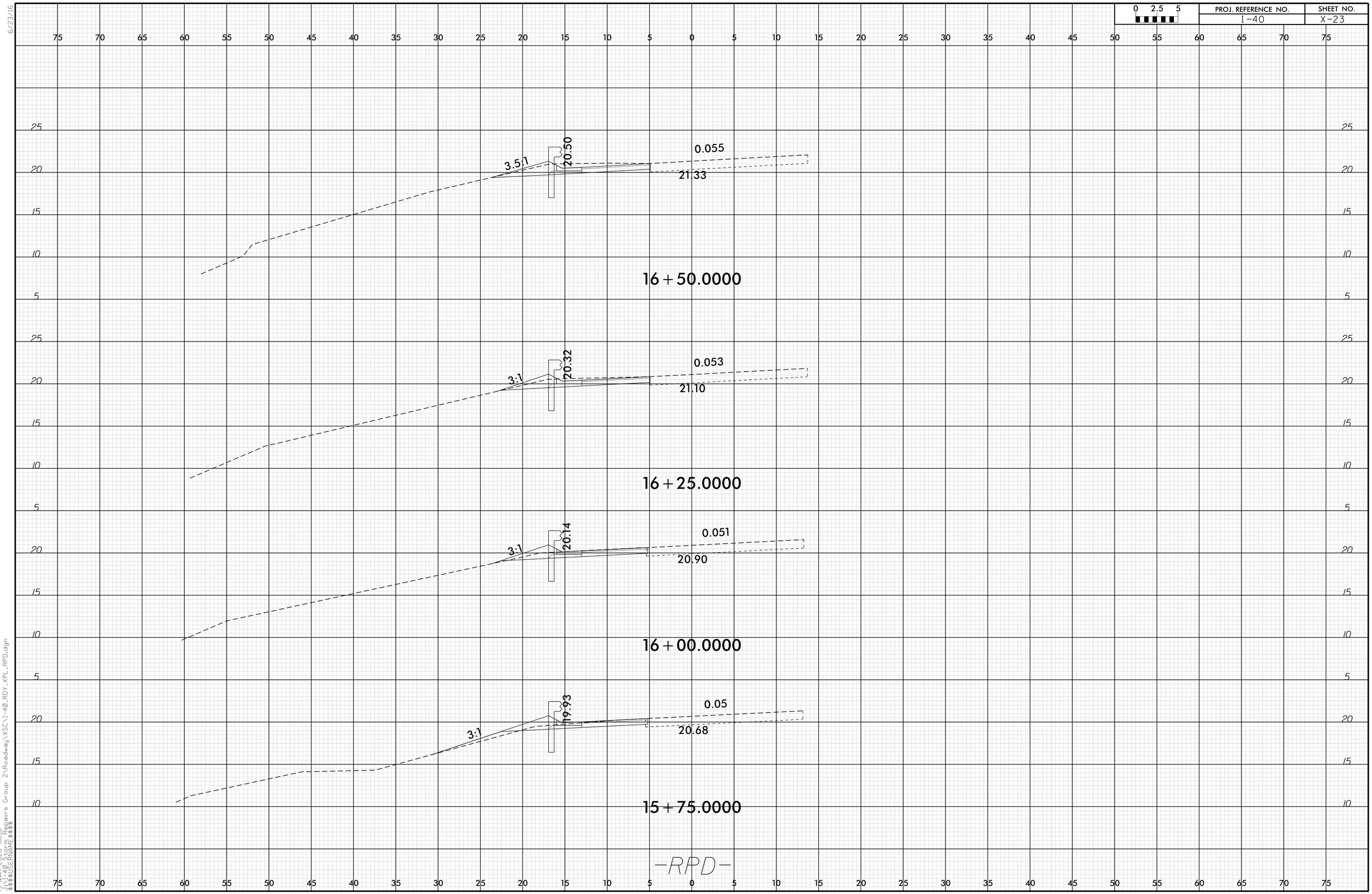

6/23/16
19-MAR-2020 10:50
I-40 Overlay Repairs Group 2\Roadway\XSCV1-40_RDY_XPL_RPD.dgn
$$$$USERNAME$$$$

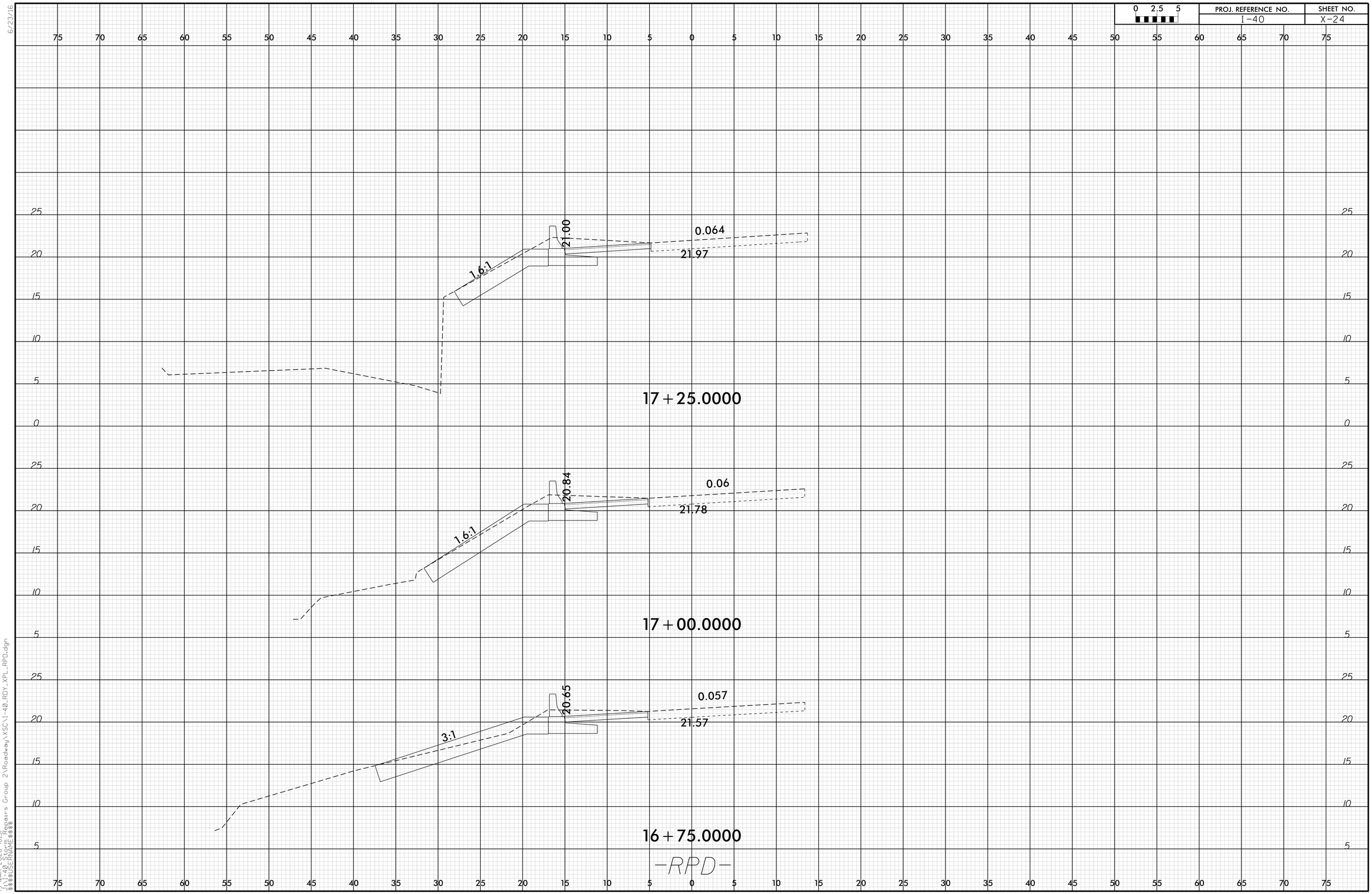

6/23/16
19-MAR-2020 10:51
I:\40120\Repairs Group 2\Roadway\XSCV1-40_RDY_XPL_RPD.dgn
$$$$USERNAME$$$$

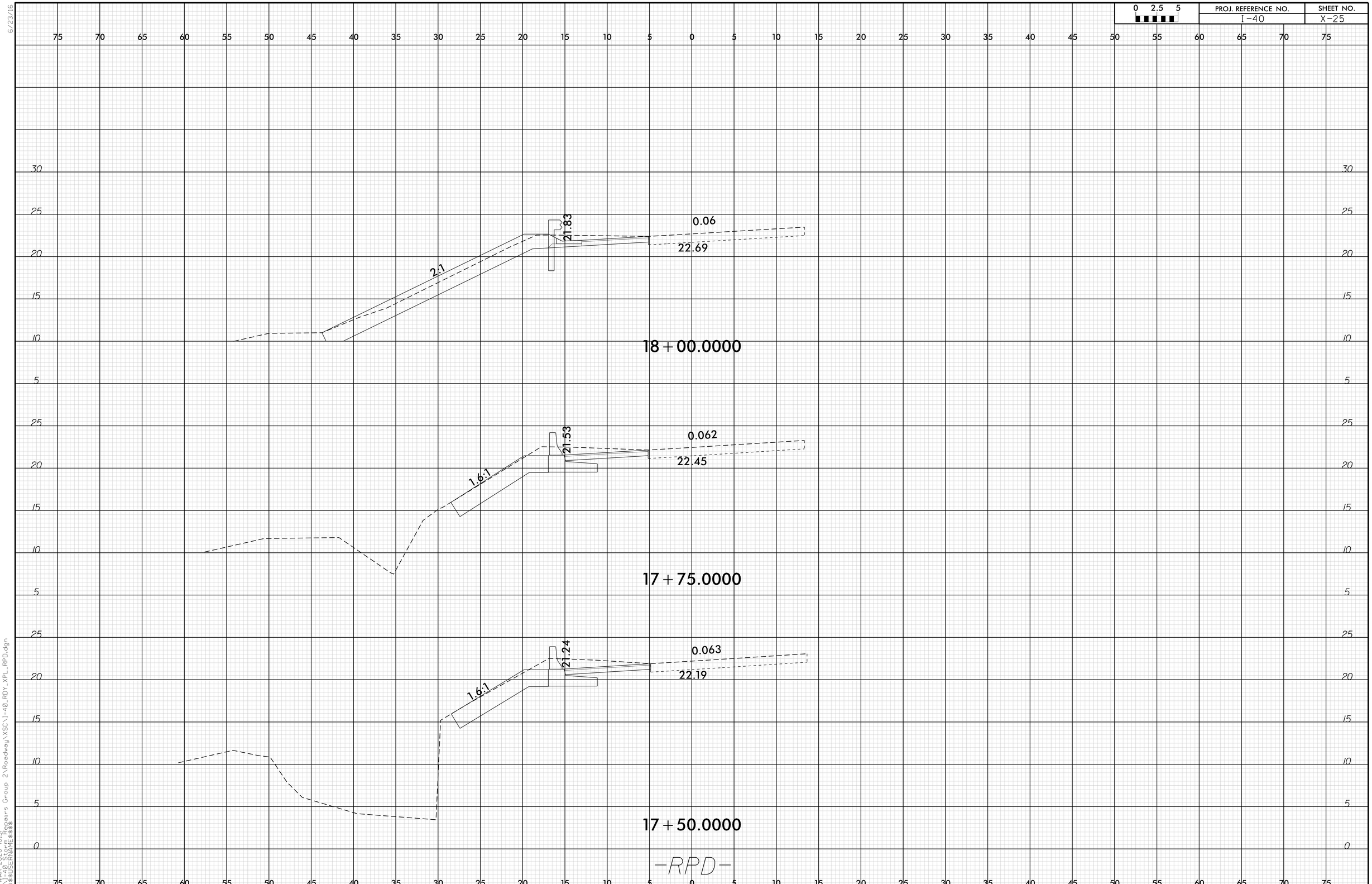

6/23/16
19-MAR-2020 10:51
$$$$USERNAME$$$$
J:\Alpha Corporation\Spears Group 2\Roadway\XSC\I-40_RDY_XPL_RPD.dgn

6/23/16

0 2.5 5	PROJ. REFERENCE NO.	SHEET NO.
	I-40	X-26

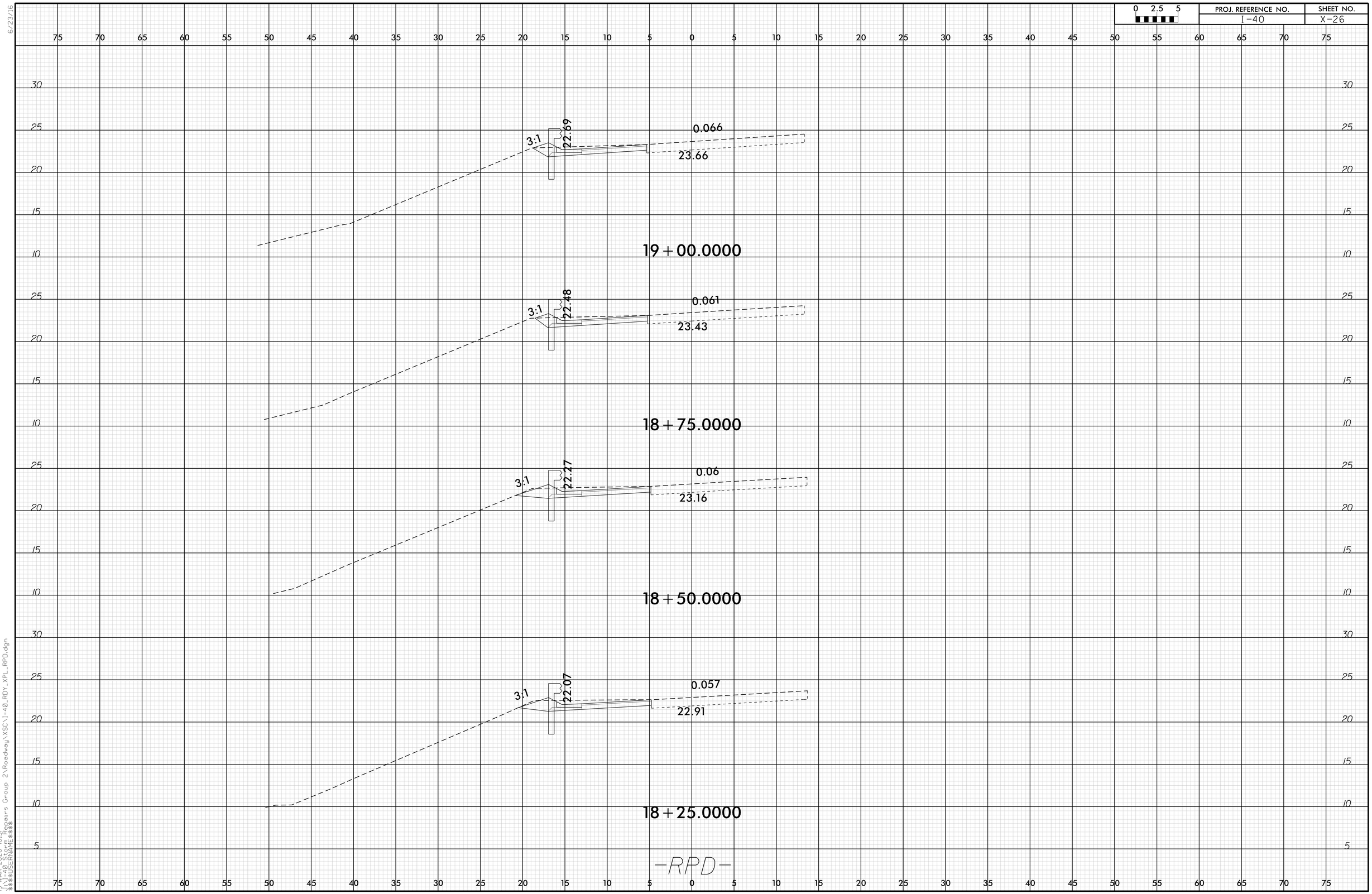

19-MAR-2020 10:51
I-40 Repairs Group 2\Roadway\XSCV1-40_RDY_XPL_RPD.dgn
$$$$USERNAME$$$$

6/23/16

0 2.5 5	PROJ. REFERENCE NO.	SHEET NO.
	I-40	X-27

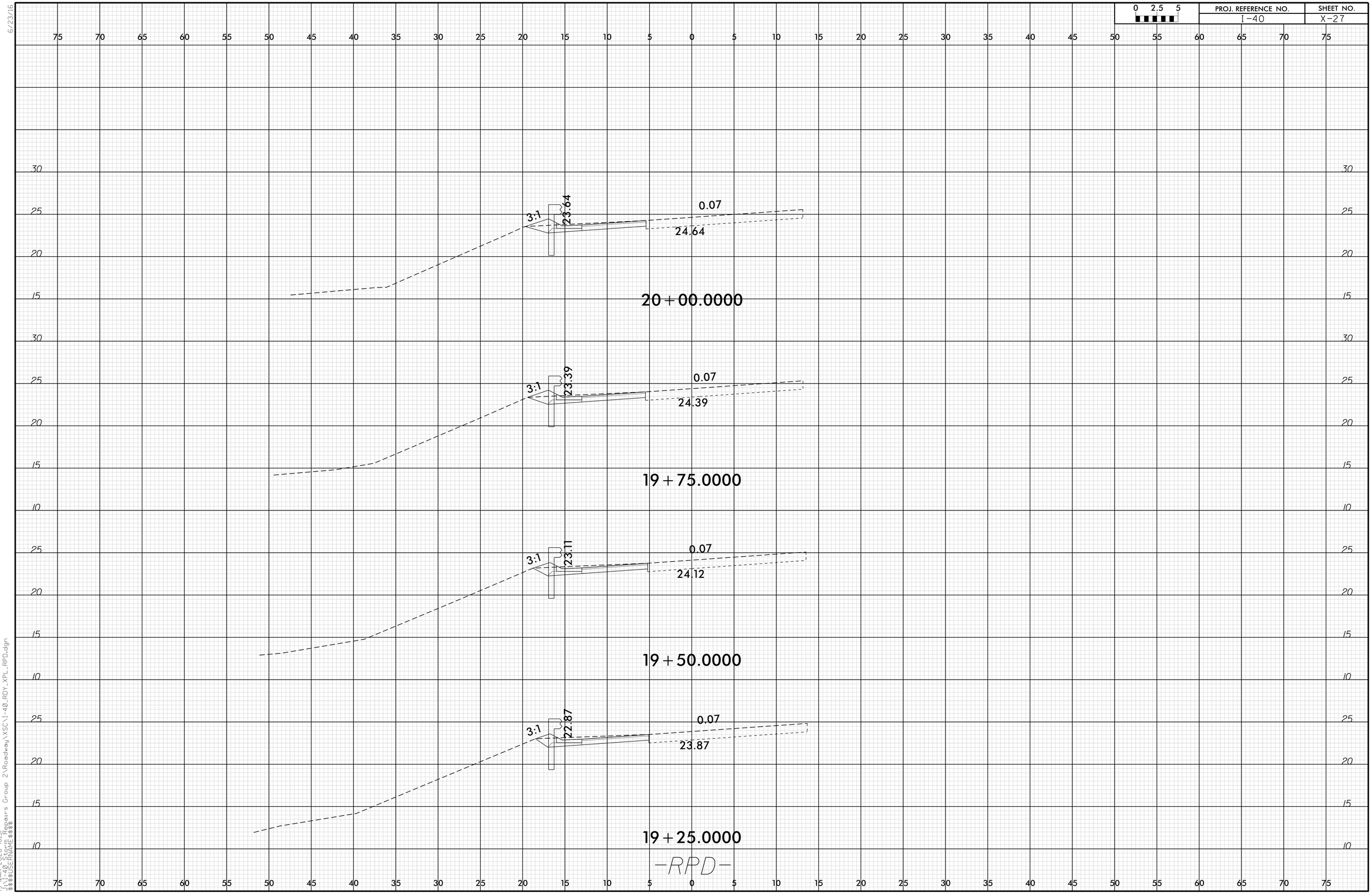

19-MAR-2020 10:51
I-40 Pier Repairs Group 2\Roadway\XSC\I-40_RDY_XPL_RPD.dgn
$$$$USERNAME$$$$

6/23/16

0 2.5 5	PROJ. REFERENCE NO.	SHEET NO.
	I-40	X-28

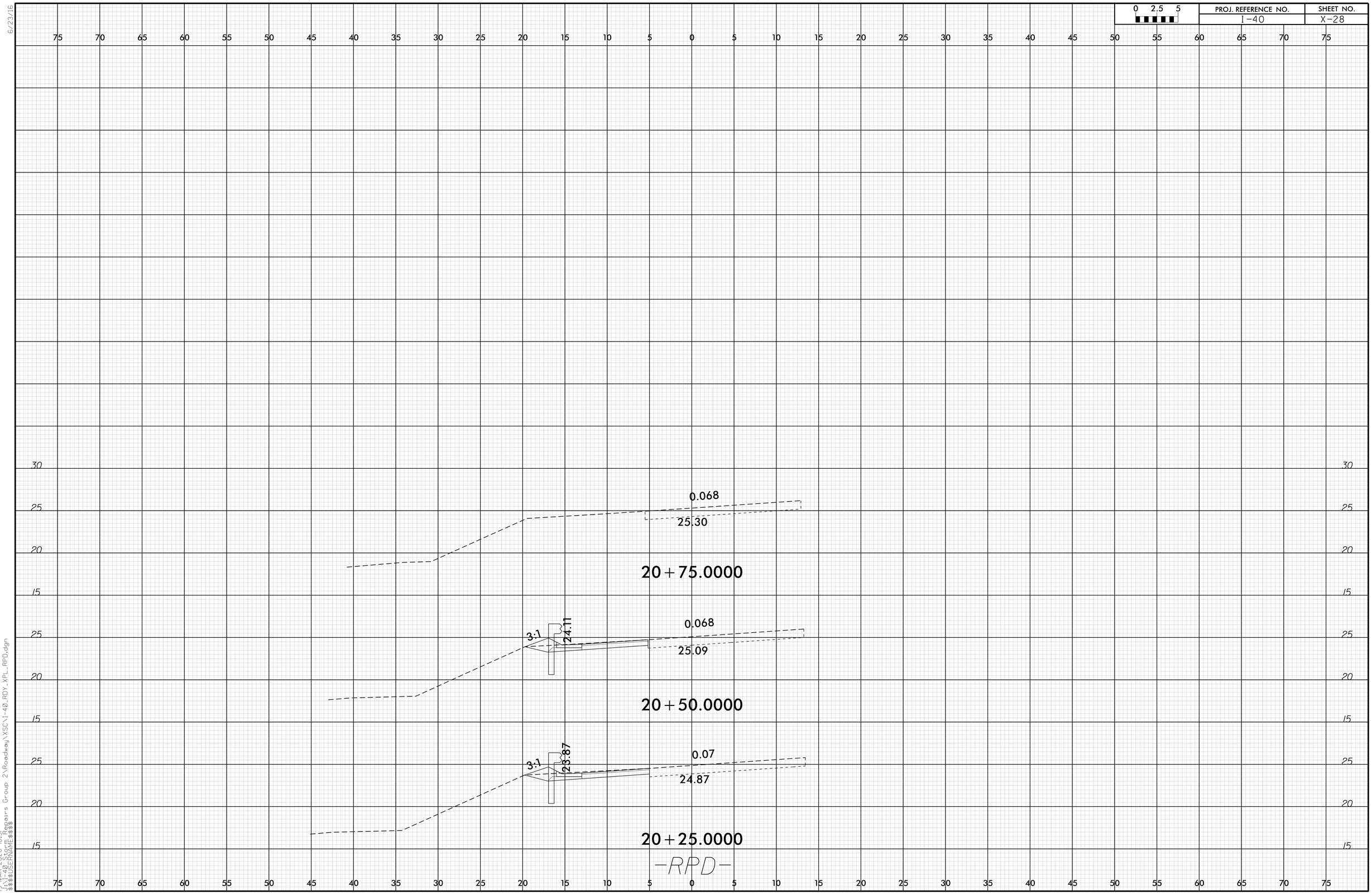

19-MAR-2020 10:51
I:\40_20_RD_Repairs Group 2\Roadway\XSC\I-40_RDY_XPL_RPD.dgn
$$$$USERNAME$$$$

DocuSign Envelope ID: E1D8A236-EB11-47BE-909B-BA0D145FBE71

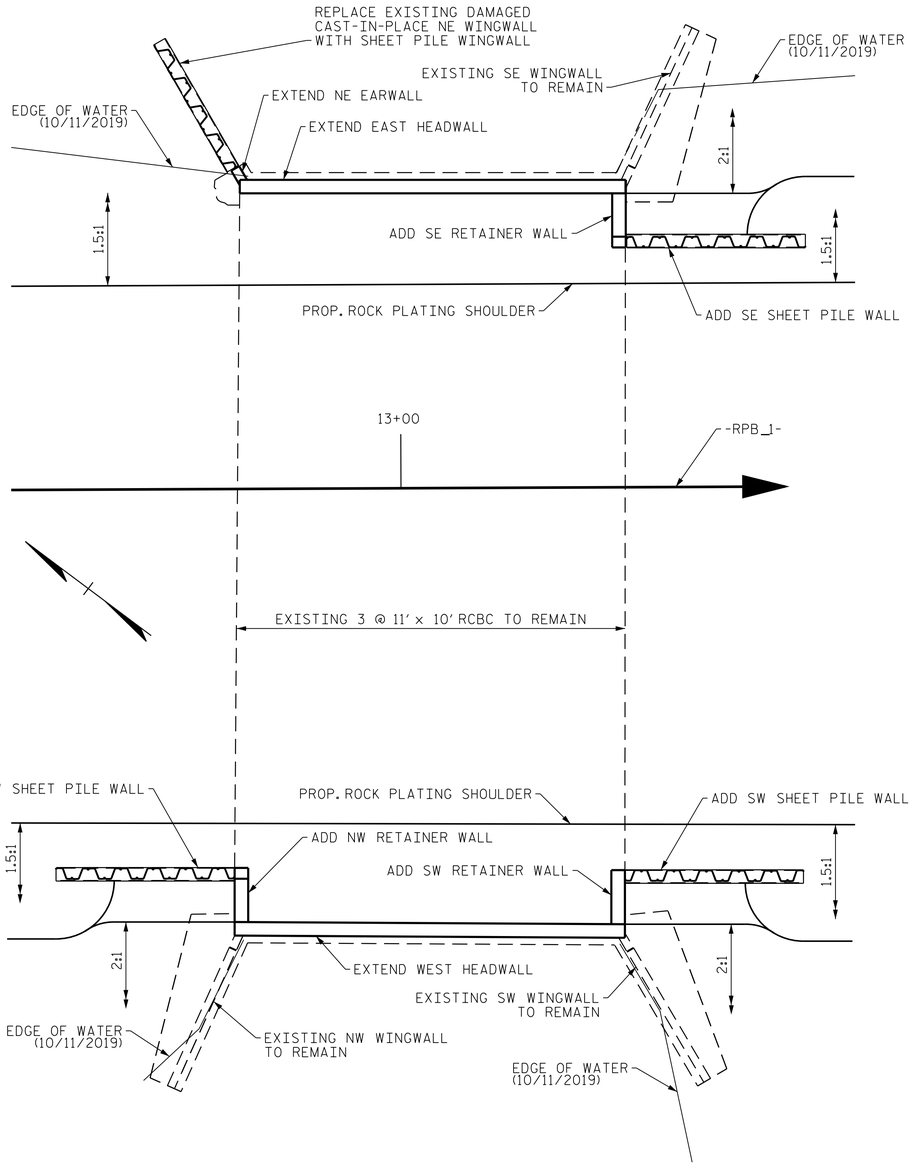

REPAIR PLAN

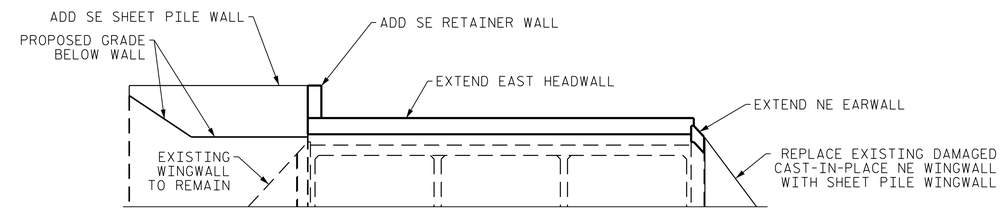

REPAIR ELEVATION (EAST)

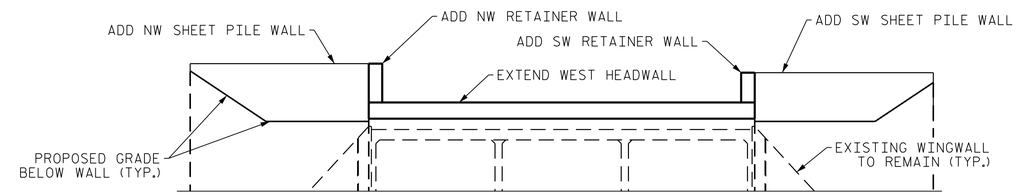

REPAIR ELEVATION (WEST)

PROJECT NO. I-40 REPAIRS
NEW HANOVER COUNTY
STATION: 13+00 -RPB_1-

SHEET 1 OF 5

TOTAL BILL OF MATERIAL

	REMOVAL OF EXISTING STRUCTURE AT STA. 13+00 -RPB_1-	CLASS A CONCRETE	REINFORCING STEEL	SHEET PILE RETAINING WALLS
	LUMP SUM	CU. YDS.	LBS.	SQ. FT.
SITE 16		8.1	656	320
TOTAL	LUMP SUM	8.1	656	320

DOCUMENT NOT CONSIDERED FINAL UNLESS ALL SIGNATURES COMPLETED

NORTH CAROLINA PROFESSIONAL SEAL 033698 ENGINEER JOSHUA B. TAYLOR

DocuSigned by: Josh Taylor 23ED8D49CA3A4B1... 6/2/2020

STATE OF NORTH CAROLINA
DEPARTMENT OF TRANSPORTATION
RALEIGH

SITE 16
HEADWALL EXTENSIONS
RETAINER WALL
AND SHEET PILE ADDITIONS
FOR 3 @ 11' X 10' RCBC

PLANS PREPARED BY :
PARSONS
5540 Centerview Drive, Suite 217
Raleigh, NC 27606-3386
NC LICENSE No. F-0246
FOR NORTH CAROLINA DEPARTMENT OF TRANSPORTATION

DRAWN BY :	JBT	DATE :	1-20
CHECKED BY :	JHN	DATE :	2-20
DESIGN ENGINEER :	JBT	DATE :	1-20

REVISIONS

No.	BY:	DATE:	No.	BY:	DATE:
1			3		
2			4		

SHEET No. S-1
TOTAL SHEETS

FILE: STILES STIMES
DATE: SDATES

DocuSign Envelope ID: E1D8A236-EB11-47BE-909B-BA0D145FBE71

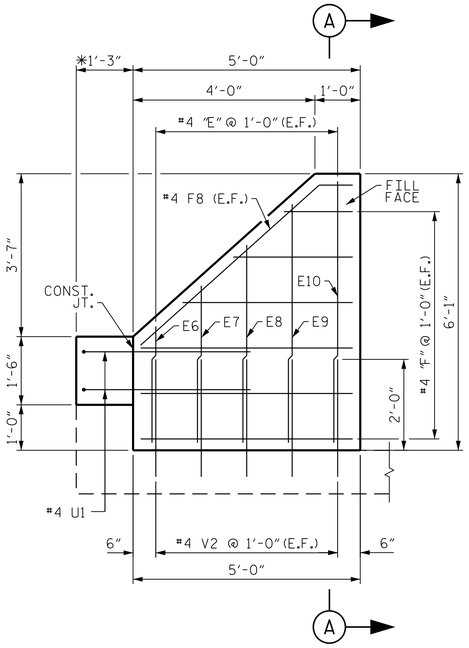

ELEVATION NW RETAINER

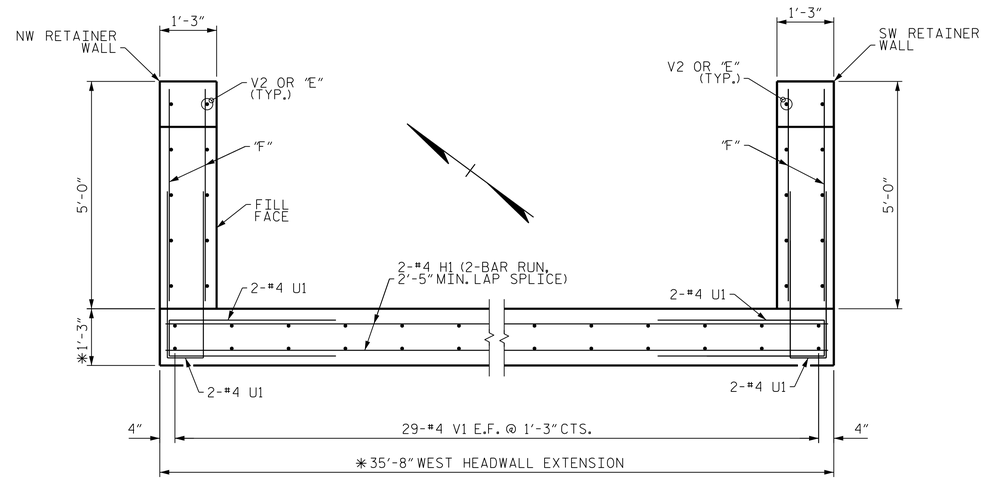

HEADWALL EXTENSION & RETAINER WALL PLAN (WEST)

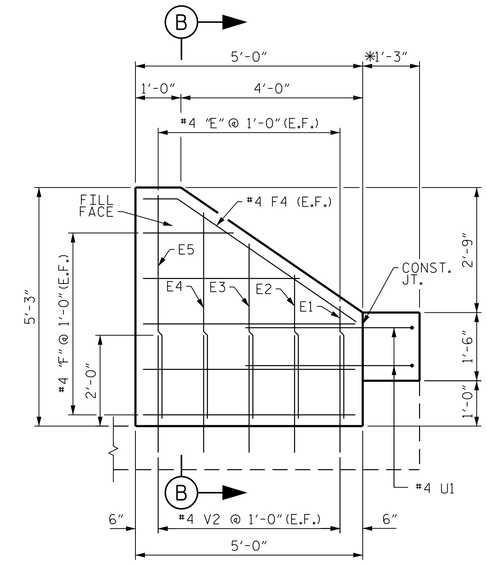

ELEVATION SW RETAINER

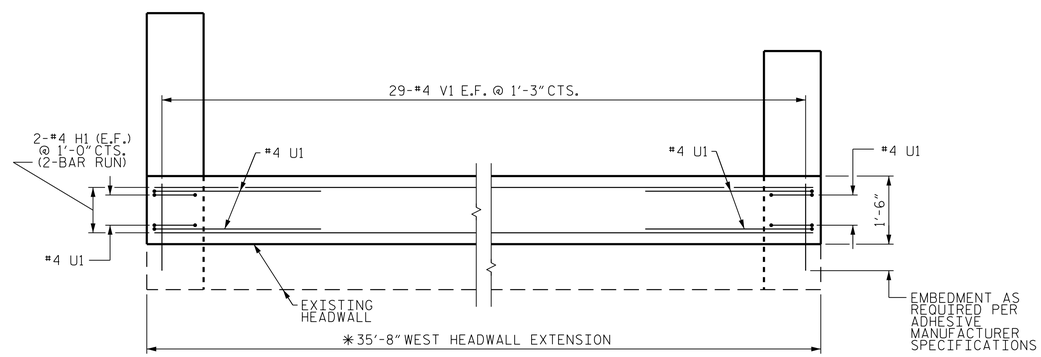

ELEVATION (WEST)

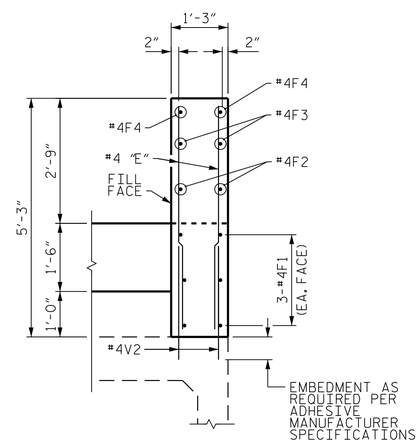

SECTION B-B

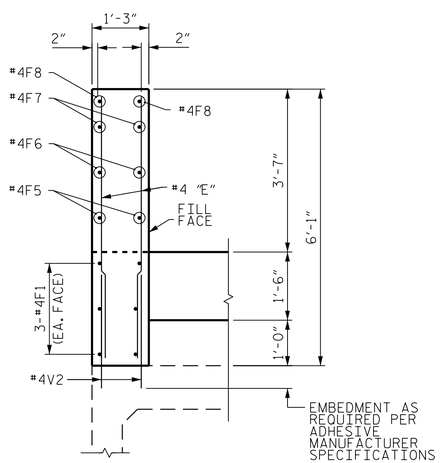

SECTION A-A

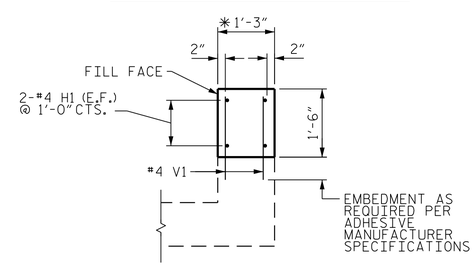

HEADWALL EXTENSION SECTION

* CONTRACTOR SHALL VERIFY FIELD MEASUREMENTS BEFORE ORDERING REINFORCING STEEL. DIMENSIONS MAY BE ADJUSTED IN THE FIELD, BUT REINFORCEMENT SIZE AND SPACING SHALL BE ACCORDING TO PLAN.

NOTE: THE #4 V1 AND #4 V2 BARS ARE TO BE ADHESIVELY ANCHORED INTO THE EXISTING HEADWALL AND CULVERT TOP SLAB. NO FIELD TESTING WILL BE REQUIRED. THE YIELD LOAD OF THE #4 "V" BARS IS 12 KIPS.

PROJECT NO. I-40 REPAIRS
NEW HANOVER COUNTY
STATION: 13+00 -RPB_1-

SHEET 2 OF 5

STATE OF NORTH CAROLINA
DEPARTMENT OF TRANSPORTATION
RALEIGH

SITE 16
HEADWALL EXTENSIONS
RETAINER WALL
AND SHEET PILE ADDITIONS
FOR 3 @ 11' X 10' RCBC

DOCUMENT NOT CONSIDERED FINAL UNLESS ALL SIGNATURES COMPLETED

NORTH CAROLINA PROFESSIONAL SEAL 033698 ENGINEER JOSHUA B. TAYLOR
DocuSigned by: Josh Taylor -25ED0B4A9CA434FF...
6/2/2020

PLANS PREPARED BY :
PARSONS
5540 Centerview Drive, Suite 217
Raleigh, NC 27606-3386
NC LICENSE No. F-0246
FOR NORTH CAROLINA DEPARTMENT OF TRANSPORTATION

DRAWN BY :	JBT	DATE :	1-20
CHECKED BY :	JHN	DATE :	2-20
DESIGN ENGINEER :	JBT	DATE :	1-20

REVISIONS

No.	BY:	DATE:	No.	BY:	DATE:
1			3		
2			4		

SHEET No. S-2
TOTAL SHEETS

FILE: $FILES
DATE: $DATES
STIMES

DocuSign Envelope ID: E1D8A236-EB11-47BE-909B-BA0D145FBE71

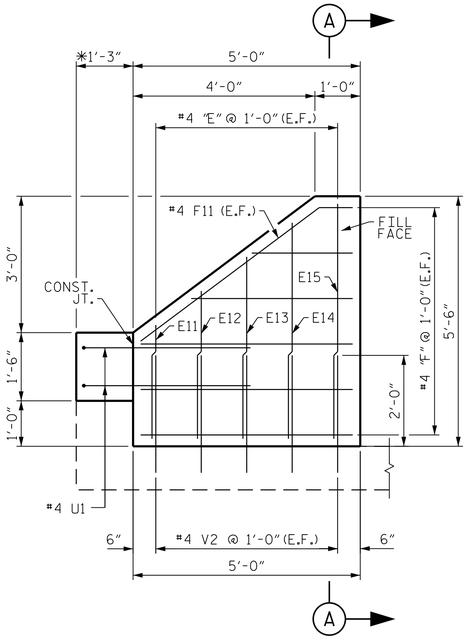

ELEVATION SE RETAINER

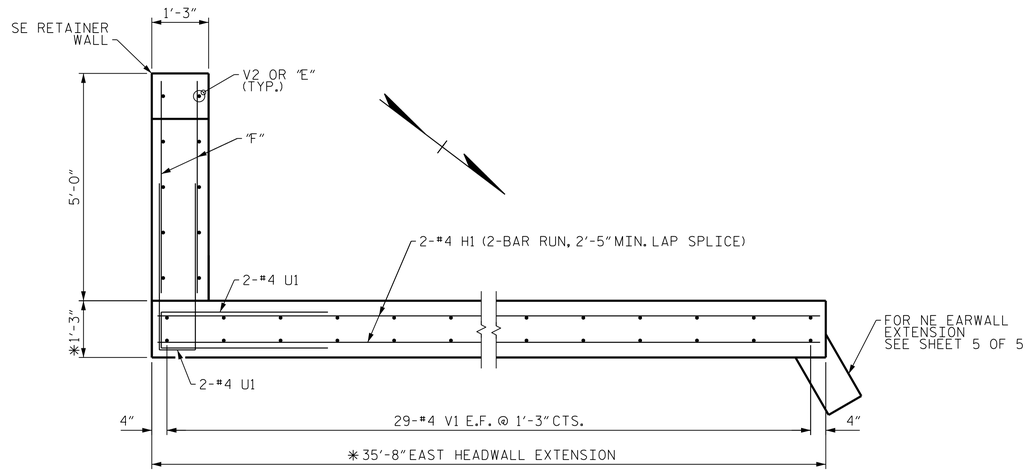

HEADWALL EXTENSION & RETAINER WALL PLAN (EAST)

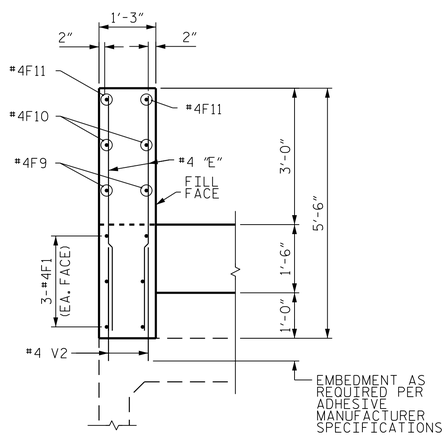

SECTION A-A

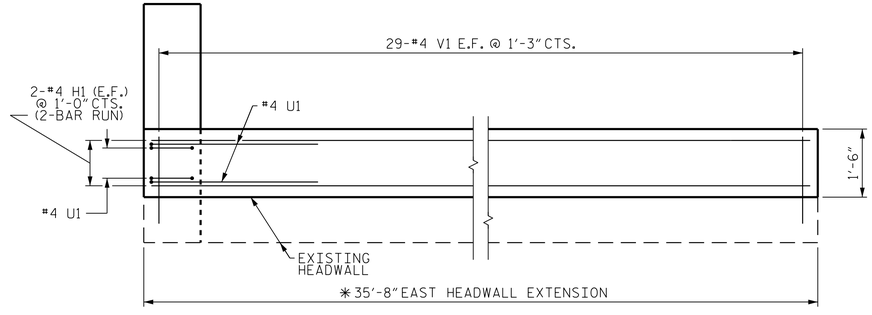

ELEVATION (EAST)

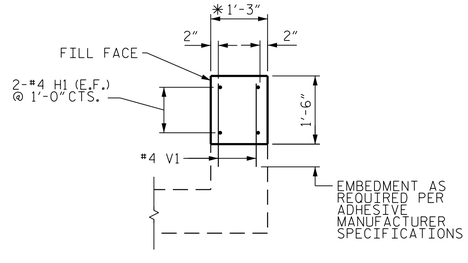

HEADWALL EXTENSION SECTION

* CONTRACTOR SHALL VERIFY FIELD MEASUREMENTS BEFORE ORDERING REINFORCING STEEL. DIMENSIONS MAY BE ADJUSTED IN THE FIELD, BUT REINFORCEMENT SIZE AND SPACING SHALL BE ACCORDING TO PLAN.

NOTE: THE #4 V1 AND #4 V2 BARS ARE TO BE ADHESIVELY ANCHORED INTO THE EXISTING HEADWALL AND CULVERT TOP SLAB. NO FIELD TESTING WILL BE REQUIRED. THE YIELD LOAD OF THE #4 "V" BARS IS 12 KIPS.

BAR TYPES

ALL BAR DIMENSIONS ARE OUT TO OUT.

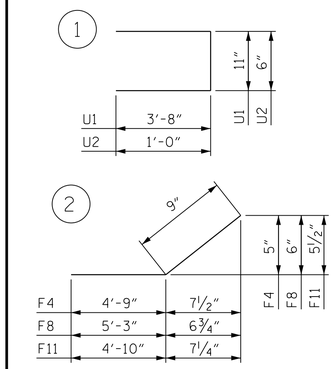

BILL OF MATERIAL

BAR	NO.	SIZE	TYPE	LENGTH	WEIGHT
E1	2	#4	STR	2'-6"	3
E2	2	#4	STR	3'-2"	4
E3	2	#4	STR	3'-10"	5
E4	2	#4	STR	4'-6"	6
E5	2	#4	STR	4'-11"	7
E6	2	#4	STR	2'-6"	3
E7	2	#4	STR	3'-5"	5
E8	2	#4	STR	4'-4"	6
E9	2	#4	STR	5'-3"	7
E10	2	#4	STR	5'-9"	8
E11	2	#4	STR	2'-6"	3
E12	2	#4	STR	3'-3"	4
E13	2	#4	STR	4'-0"	5
E14	2	#4	STR	4'-9"	6
E15	2	#4	STR	5'-2"	7
F1	18	#4	STR	4'-8"	56
F2	2	#4	STR	3'-5"	5
F3	2	#4	STR	2'-0"	3
F4	2	#4	2	5'-3"	7
F5	2	#4	STR	3'-9"	5
F6	2	#4	STR	2'-8"	4
F7	2	#4	STR	1'-6"	2
F8	2	#4	2	6'-0"	8
F9	2	#4	STR	3'-7"	5
F10	2	#4	STR	2'-3"	3
F11	2	#4	2	5'-7"	7
H1	16	#4	STR	19'-3"	206
U1	12	#4	1	8'-3"	66
U2	2	#4	1	2'-6"	3
V1	120	#4	STR	1'-10"	147
V2	30	#4	STR	2'-6"	50

REINFORCING STEEL 656 LBS

CLASS A CONCRETE		
WEST HEADWALL EXT	2.5	CY
EAST HEADWALL + EAR EXT	2.5	CY
SW RETAINER WALL	1.0	CY
NW RETAINER WALL	1.1	CY
SE RETAINER WALL	1.0	CY
TOTAL	8.1	CY

PROJECT NO. I-40 REPAIRS

NEW HANOVER COUNTY

STATION: 13+00 -RPB_1-

SHEET 3 OF 5

STATE OF NORTH CAROLINA
DEPARTMENT OF TRANSPORTATION
RALEIGH

SITE 16 HEADWALL EXTENSIONS RETAINER WALL AND SHEET PILE ADDITIONS FOR 3 @ 11' X 10' RCBC

DOCUMENT NOT CONSIDERED FINAL UNLESS ALL SIGNATURES COMPLETED

NORTH CAROLINA PROFESSIONAL SEAL 033698 ENGINEER JOSHUA B. TAYLOR

DocuSigned by: Josh Taylor 23ED6649CA3444...

6/2/2020

PLANS PREPARED BY :
PARSONS
5540 Centerview Drive, Suite 217
Raleigh, NC 27606-3386
NC LICENSE No. F-0246
FOR NORTH CAROLINA DEPARTMENT OF TRANSPORTATION

DRAWN BY :	JBT	DATE :	1-20
CHECKED BY :	JHN	DATE :	2-20
DESIGN ENGINEER :	JBT	DATE :	1-20

REVISIONS						SHEET No.
No.	BY:	DATE:	No.	BY:	DATE:	S-3
1			3			TOTAL SHEETS
2			4			

FILE: $FILES
DATE: $DATES
STIMES

DocuSign Envelope ID: E1D8A236-EB11-47BE-909B-BA0D1145FBE71

BILL OF MATERIAL

SHEET PILE WALLS		
@ SE WING	68	SF
@ NW WING	73	SF
@ SW WING	64	SF
TOTAL	205	SF

SHEET PILE CAP, GEOTEXTILE AND ELASTOMERIC MAT ARE INCIDENTAL TO PAY ITEM SHEET PILE WALLS.

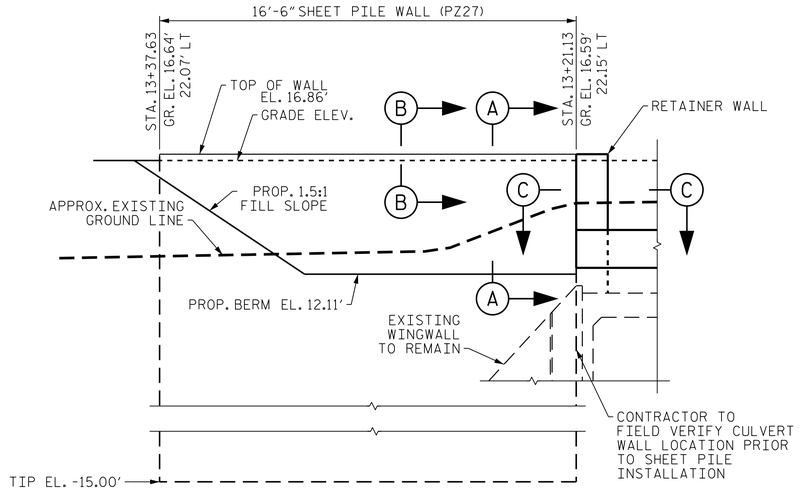

ELEVATION: SE SHEET PILE WALL

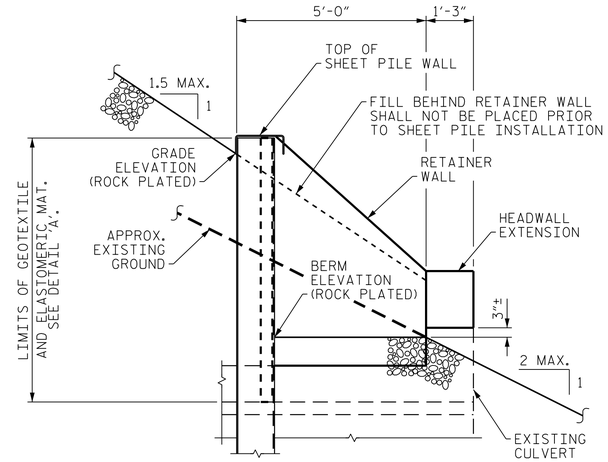

SECTION A-A

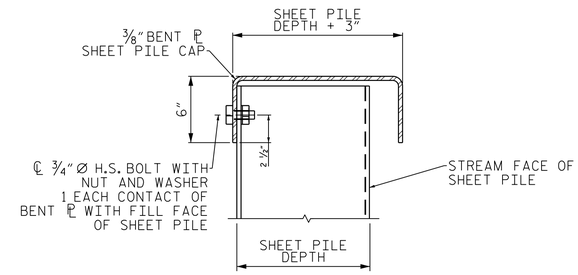

SECTION B-B

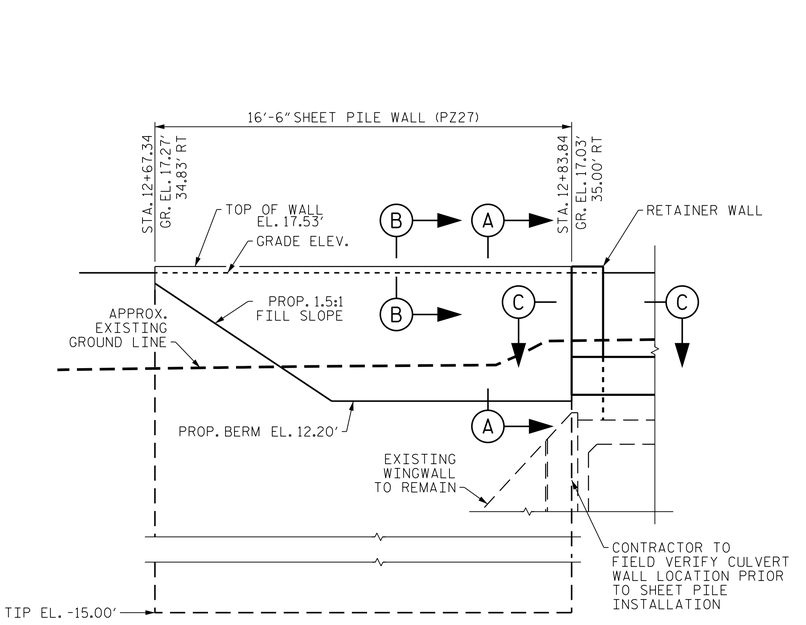

ELEVATION: NW SHEET PILE WALL

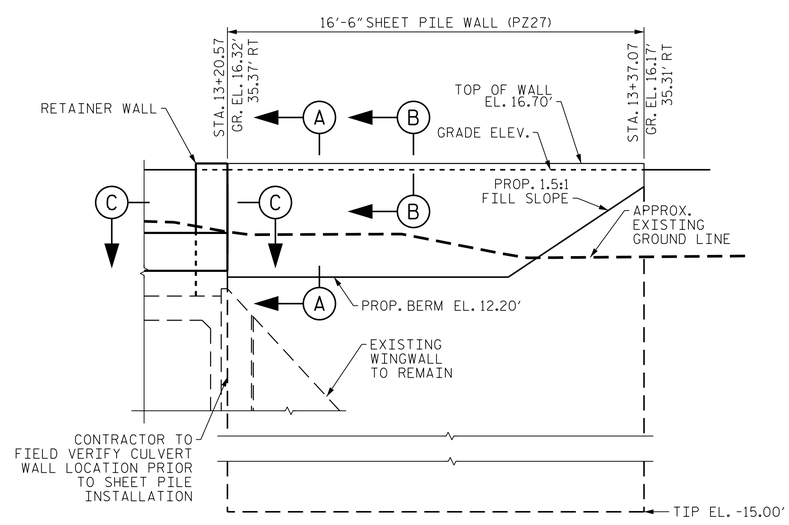

ELEVATION: SW SHEET PILE WALL

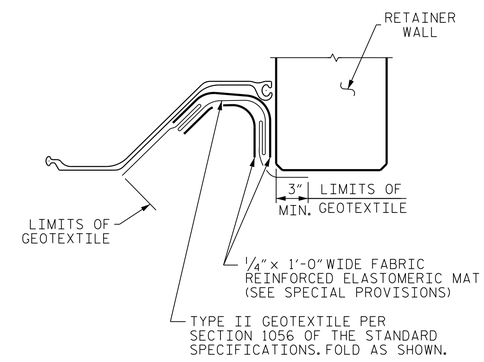

SECTION C-C

PROJECT NO. I-40 REPAIRS
NEW HANOVER COUNTY
STATION: 13+00 -RPB_1-

SHEET 4 OF 5

STATE OF NORTH CAROLINA
DEPARTMENT OF TRANSPORTATION
RALEIGH

SITE 16
HEADWALL EXTENSIONS
RETAINER WALL
AND SHEET PILE ADDITIONS
FOR 3 @ 11' X 10' RCBC

DOCUMENT NOT CONSIDERED FINAL UNLESS ALL SIGNATURES COMPLETED

NORTH CAROLINA PROFESSIONAL SEAL 033698 ENGINEER JOSHUA B. TAYLOR
DocuSigned by: Joshua B. Taylor
23ED8649C4A4...
6/2/2020

PLANS PREPARED BY :
PARSONS
5540 Centerview Drive, Suite 217
Raleigh, NC 27606-3386
NC LICENSE No. F-0246
FOR NORTH CAROLINA DEPARTMENT OF TRANSPORTATION

DRAWN BY :	JBT	DATE :	1-20
CHECKED BY :	JHN	DATE :	2-20
DESIGN ENGINEER :	JBT	DATE :	1-20

REVISIONS						SHEET No.
No.	BY:	DATE:	No.	BY:	DATE:	S-4
1			3			TOTAL SHEETS
2			4			

FILE: $FILES
DATE: $DATES
$TIMES

DocuSign Envelope ID: E1D8A236-EB11-47BE-909B-BA0D145FBE71

BILL OF MATERIAL

SHEET PILE WALLS @ NE WING	113	SF
TOTAL	113	SF

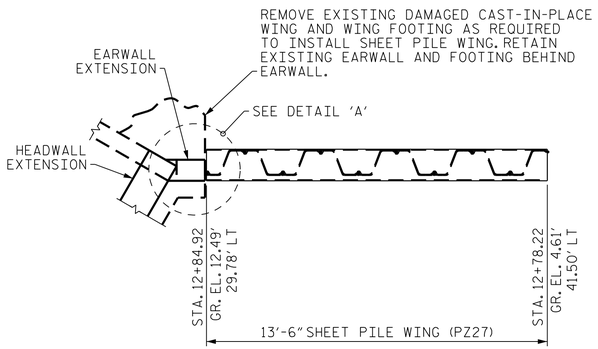

PLAN

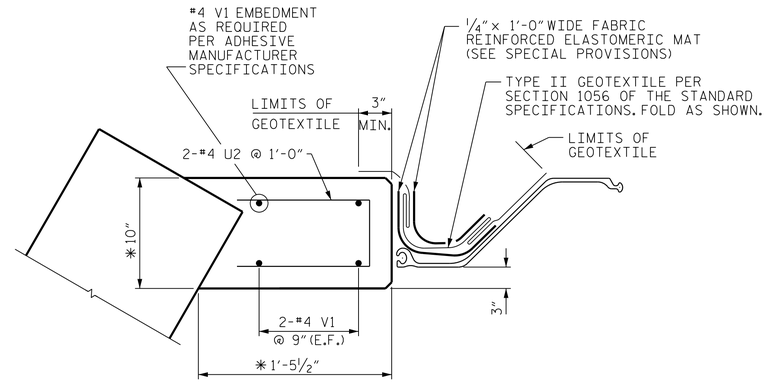

DETAIL 'A'

* CONTRACTOR SHALL VERIFY FIELD MEASUREMENTS BEFORE ORDERING REINFORCING STEEL. DIMENSIONS MAY BE ADJUSTED IN THE FIELD, BUT REINFORCEMENT SIZE AND SPACING SHALL BE ACCORDING TO PLAN.

NOTE: THE #4 V1 BARS ARE TO BE ADHESIVELY ANCHORED INTO THE EXISTING EARWALL. NO FIELD TESTING WILL BE REQUIRED. THE YIELD LOAD OF THE #4 V1 BARS IS 12 KIPS.

FOR SECTION B-B, SEE SHEET 4 OF 5.

SHEET PILE CAP, GEOTEXTILE AND ELASTOMERIC MAT ARE INCIDENTAL TO PAY ITEM SHEET PILE WALLS.

EARWALL EXTENSION QUANTITIES INCLUDED ON SHEET 3 OF 5.

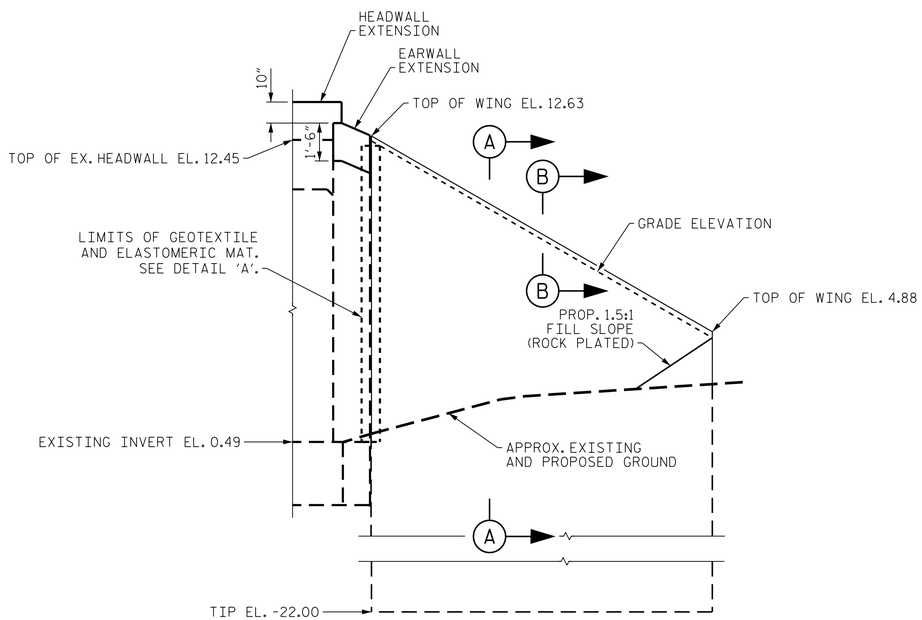

ELEVATION: NE SHEET PILE WING

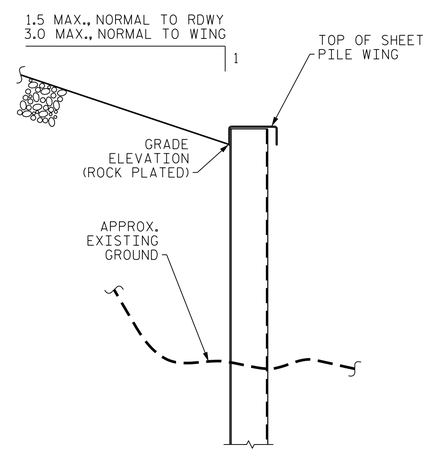

SECTION A-A

PROJECT NO. I-40 REPAIRS
NEW HANOVER COUNTY
STATION: 13+00 -RPB_1-

SHEET 5 OF 5

STATE OF NORTH CAROLINA
DEPARTMENT OF TRANSPORTATION
RALEIGH

SITE 16 HEADWALL EXTENSIONS RETAINER WALL AND SHEET PILE ADDITIONS FOR 3 @ 11' X 10' RCBC

DOCUMENT NOT CONSIDERED FINAL UNLESS ALL SIGNATURES COMPLETED

NORTH CAROLINA PROFESSIONAL SEAL 033698 ENGINEER JOSHUA B. TAYLOR
DocuSigned by: Josh Taylor 23ED8649C4344F...
6/2/2020

DRAWN BY :	JBT	DATE :	1-20
CHECKED BY :	JHN	DATE :	2-20
DESIGN ENGINEER :	JBT	DATE :	1-20

PLANS PREPARED BY :
PARSONS
5540 Centerview Drive, Suite 217
Raleigh, NC 27606-3386
NC LICENSE No. F-0246
FOR NORTH CAROLINA DEPARTMENT OF TRANSPORTATION

REVISIONS

No.	BY:	DATE:	No.	BY:	DATE:
1			3		
2			4		

SHEET No. S-5
TOTAL SHEETS

FILE: $FILES $TIMES
DATE: $DATES

DocuSign Envelope ID: E1D8A236-EB11-47BE-909B-BA0D145FBE71

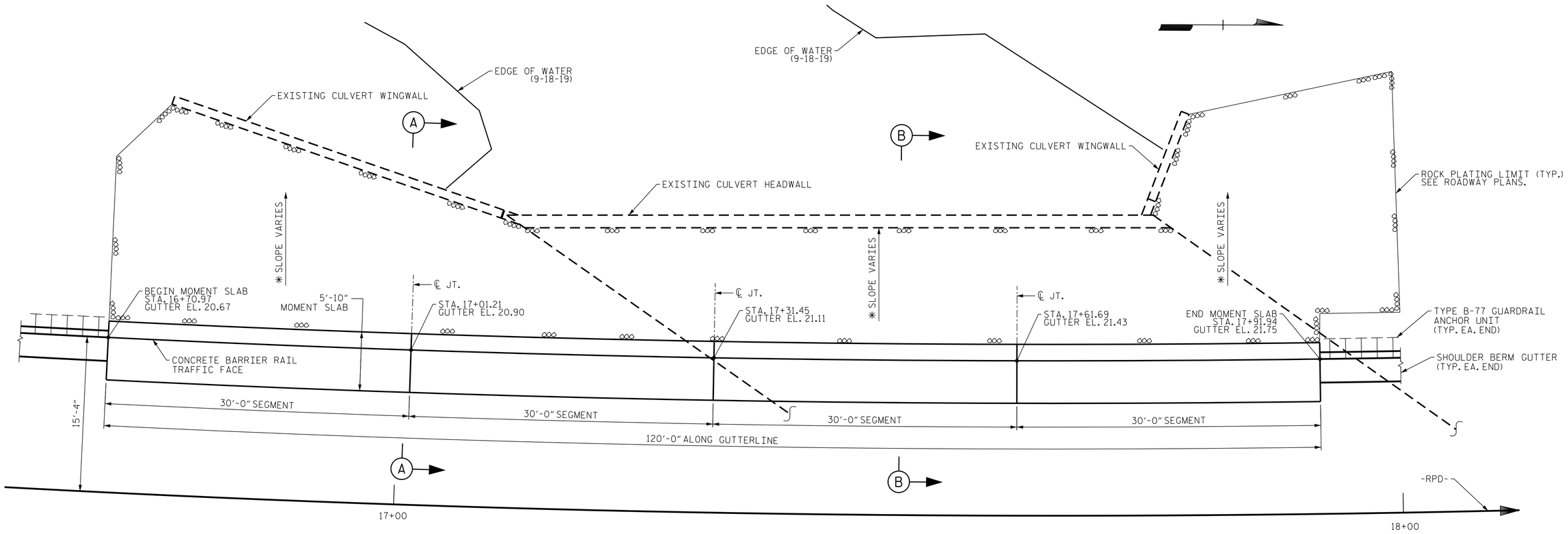

PLAN

* CUT SLOPE SHALL BE FLATTER THAN OR EQUAL TO THE EXISTING SLOPE. ROCK PLATING SHALL CONFORM TO ROCK PLATING DETAIL NO. 3 EXCEPT AS MODIFIED HEREIN. SEE ROADWAY PLANS FOR ROCK PLATING QUANTITIES.

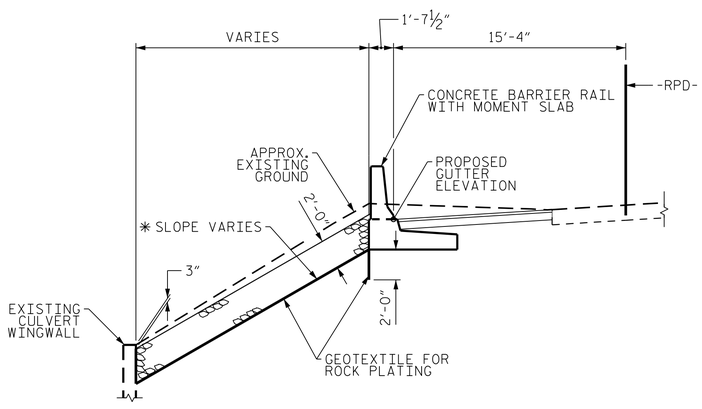

SECTION A-A

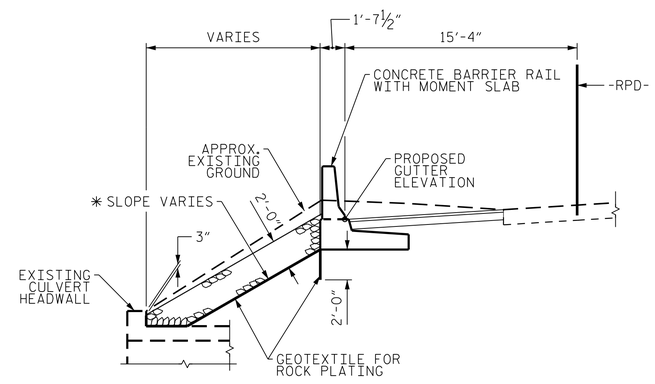

SECTION B-B

PROJECT NO. I-40 REPAIRS
NEW HANOVER COUNTY
STATION: 17+30 -RPD-

SHEET 1 OF 3

STATE OF NORTH CAROLINA
DEPARTMENT OF TRANSPORTATION
RALEIGH

SITE 2619

CONCRETE BARRIER RAIL WITH MOMENT SLAB LAYOUT

DOCUMENT NOT CONSIDERED FINAL UNLESS ALL SIGNATURES COMPLETED

NORTH CAROLINA PROFESSIONAL SEAL 033698 ENGINEER JOSHUA B. TAYLOR

DocuSigned by: Josh Taylor
23ED8649C4334B1...
6/2/2020

PLANS PREPARED BY :
PARSONS
5540 Centerview Drive, Suite 217
Raleigh, NC 27606-3386
NC LICENSE No. F-0246
FOR NORTH CAROLINA DEPARTMENT OF TRANSPORTATION

DRAWN BY :	JBT	DATE :	1-20
CHECKED BY :	JHN	DATE :	2-20
DESIGN ENGINEER :	JBT	DATE :	1-20

REVISIONS

No.	BY:	DATE:	No.	BY:	DATE:
1			3		
2			4		

SHEET No. S-6
TOTAL SHEETS

FILE: SFILES STIMES
DATE: $DATE$

DocuSign Envelope ID: E1D8A236-EB11-47BE-909B-BA0D145FBE71

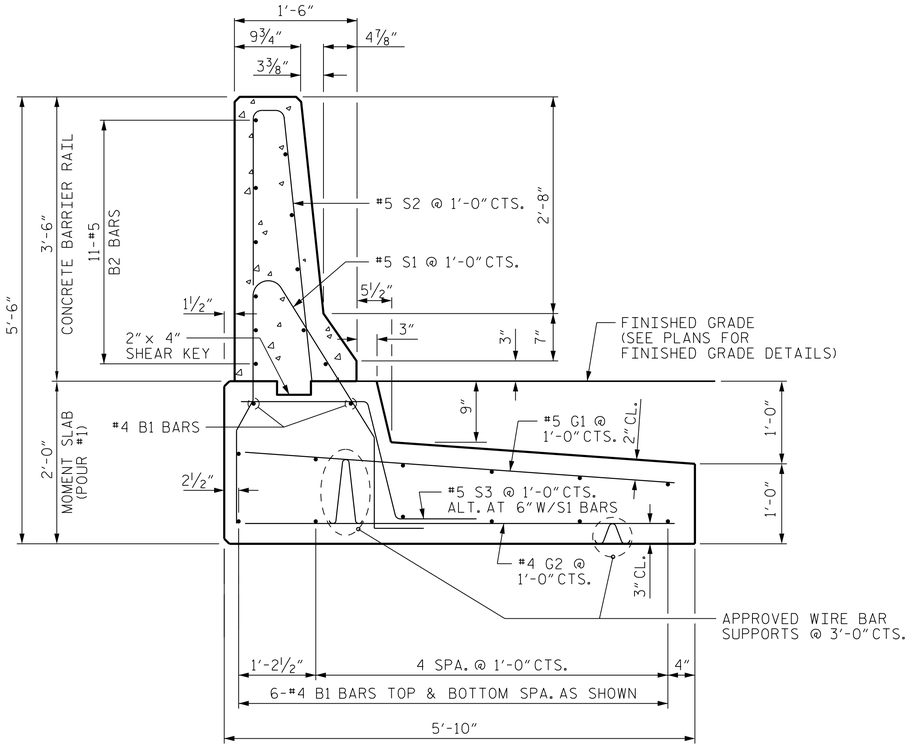

CONCRETE BARRIER RAIL WITH MOMENT SLAB

NOTES:

FOR CONCRETE BARRIER RAIL WITH MOMENT SLAB, SEE CONCRETE BARRIER RAIL WITH MOMENT SLAB PROVISION.

EXPANSION JOINTS SHALL BE PLACED IN THE BARRIER RAIL AND MOMENT SLAB AT A MAXIMUM SPACING OF 30'.

GROOVED CONTRACTION JOINTS, 1/2" IN DEPTH, SHALL BE TOOLED IN ALL EXPOSED SURFACES OF THE BARRIER RAIL AND IN ACCORDANCE WITH ARTICLE 825-10(B) OF THE STANDARD SPECIFICATIONS. A CONTRACTION JOINT SHALL BE LOCATED AT EACH THIRD POINT BETWEEN BARRIER RAIL EXPANSION JOINTS. ONLY ONE CONTRACTION JOINT IS REQUIRED AT MID-POINT OF BARRIER RAIL SEGMENTS LESS THAN 20' IN LENGTH.

THE BARRIER RAIL SHALL NOT BE CAST UNTIL THE MOMENT SLAB HAS ATTAINED AN AGE OF THREE CURING DAYS OR A MINIMUM COMPRESSIVE STRENGTH OF 2,000 PSI. IN ADDITION, NO FILL MATERIAL, ASPHALT, OR CONSTRUCTION EQUIPMENT IS ALLOWED ON THE MOMENT SLAB PRIOR TO SATISFYING THE MINIMUM CONCRETE CURING AND STRENGTH REQUIREMENTS.

ALL REINFORCING STEEL IN THE BARRIER RAIL SHALL BE EPOXY COATED.

IF EXISTING OR FUTURE OBSTRUCTIONS SUCH AS FOUNDATIONS, BARRIERS, PIPES, INLETS OR UTILITIES WILL INTERFERE WITH CONCRETE BARRIER RAIL WITH MOMENT SLAB, CONCRETE BARRIER RAIL WITH MOMENT SLAB DETAILS SHALL BE REVISED AND SUBMITTED FOR APPROVAL.

BAR TYPES

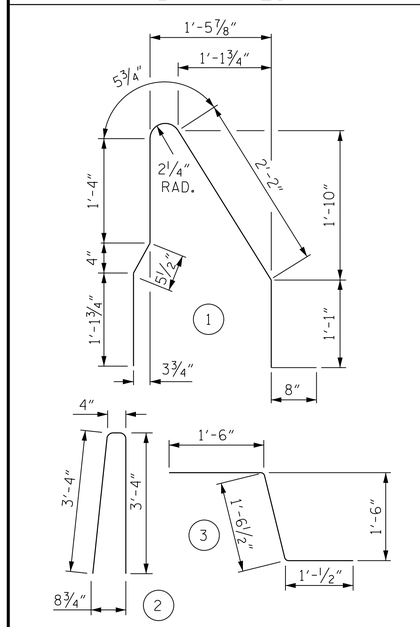

ALL BAR DIMENSIONS ARE OUT TO OUT

BILL OF MATERIAL

FOR FOUR 30'-0" SECTIONS OF CONCRETE BARRIER RAIL WITH MOMENT SLAB

BAR	NO.	SIZE	TYPE	LENGTH	WEIGHT
B1	56	#4	STR	29'-7"	1107
✳ B2	44	#5	STR	29'-7"	1358
G1	124	#5	STR	5'-6"	711
G2	124	#4	STR	5'-6"	456
✳ S1	124	#5	1	7'-3"	938
✳ S2	124	#5	2	7'-0"	905
S3	120	#5	3	4'-1"	511

REINFORCING STEEL	2785 LB
✳ EPOXY COATED REINFORCING STEEL	3201 LB
CLASS AA CONCRETE BARRIER RAIL	16.4 CY
CLASS A CONCRETE MOMENT SLAB	36.4 CY
CONCRETE BARRIER RAIL WITH MOMENT SLAB	120 LIN FT

CONCRETE BARRIER RAIL WITH MOMENT SLAB

PAY LENGTH = 120.0 LIN FT

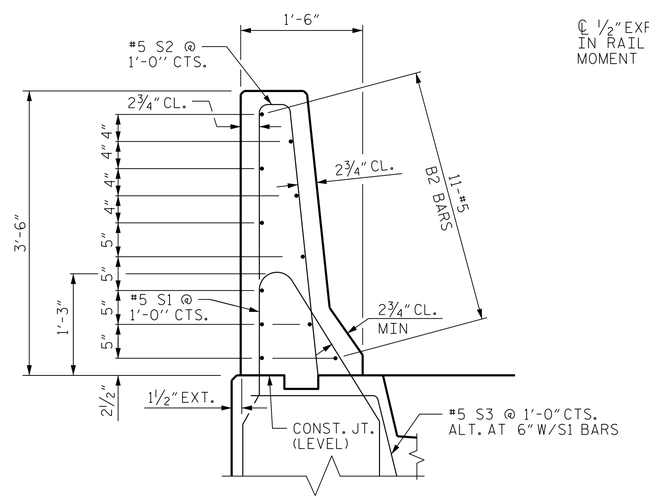

SECTION THRU RAIL

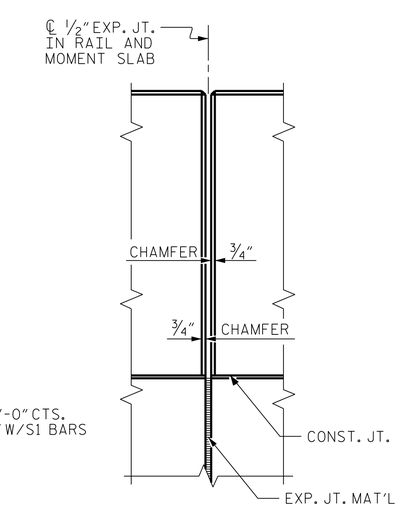

ELEV. @ EXP. JOINTS

BARRIER RAIL DETAILS

PROJECT NO. I-40 REPAIRS
NEW HANOVER COUNTY
STATION: 17+30 -RPD-

SHEET 2 OF 3

STATE OF NORTH CAROLINA
DEPARTMENT OF TRANSPORTATION
RALEIGH

SITE 2619

CONCRETE BARRIER RAIL WITH MOMENT SLAB

DOCUMENT NOT CONSIDERED FINAL UNLESS ALL SIGNATURES COMPLETED

NORTH CAROLINA PROFESSIONAL SEAL 033698 ENGINEER JOSHUA B. TAYLOR

DocuSigned by: Josh Taylor 23ED864BC7A2BD... 6/2/2020

PLANS PREPARED BY :
PARSONS
5540 Centerview Drive, Suite 217
Raleigh, NC 27606-3386
NC LICENSE No. F-0246
FOR NORTH CAROLINA DEPARTMENT OF TRANSPORTATION

DRAWN BY :	JBT	DATE :	1-20
CHECKED BY :	JHN	DATE :	2-20
DESIGN ENGINEER :	JBT	DATE :	1-20

REVISIONS						SHEET No.
No.	BY:	DATE:	No.	BY:	DATE:	S-7
1			3			TOTAL SHEETS
2			4			

FILE: $FILES $TIMES
DATE: $DATES

DocuSign Envelope ID: E1D8A236-EB11-47BE-909B-BA0D145FBE71

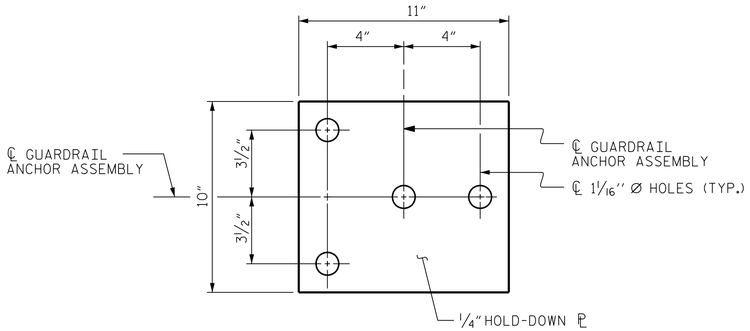

PLAN

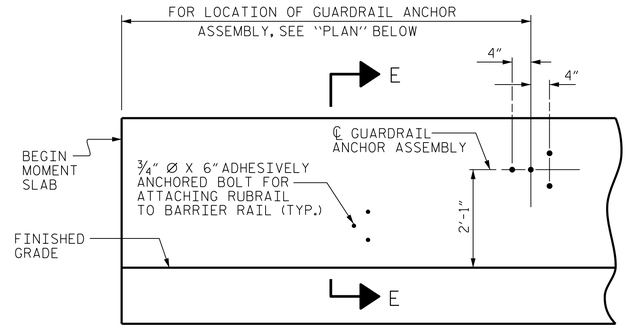

ELEVATION

NOTES

THE GUARDRAIL ANCHOR ASSEMBLY SHALL CONSIST OF A 1/4" HOLD-DOWN PLATE AND 4 - 7/8" Ø BOLTS WITH NUTS AND WASHERS, RUBRAIL, AND ADHESIVELY ANCHORED BOLTS.

THE HOLD-DOWN PLATE SHALL CONFORM TO AASHTO M270 GRADE 36. AFTER FABRICATION, THE HOLD-DOWN PLATE SHALL BE HOT-DIP GALVANIZED IN ACCORDANCE WITH AASHTO M111.

BOLTS SHALL CONFORM TO THE REQUIREMENTS OF ASTM A307 AND NUTS SHALL CONFORM TO THE REQUIREMENTS OF AASHTO M291. BOLTS, NUTS AND WASHERS SHALL BE GALVANIZED. (AT THE CONTRACTOR'S OPTION, STAINLESS STEEL BOLTS, NUTS AND WASHERS MAY BE USED AS AN ALTERNATE FOR THE 7/8" Ø GALVANIZED BOLTS, NUTS AND WASHERS. THEY SHALL CONFORM TO OR EXCEED THE MECHANICAL REQUIREMENTS OF ASTM A307. THE USE OF THIS ALTERNATE SHALL BE APPROVED BY THE ENGINEER.)

THE GUARDRAIL ANCHOR ASSEMBLY IS REQUIRED AT ALL POINTS WHERE APPROACH GUARDRAIL IS TO BE ATTACHED TO THE END OF BARRIER RAIL. FOR POINTS OF ATTACHMENT, SEE SKETCH.

AFTER INSTALLATION, THE EXPOSED THREAD OF THE BOLT SHALL BE BURRED WITH A SHARP POINTED TOOL.

THE COST OF THE GUARDRAIL ANCHOR ASSEMBLY SHALL BE INCLUDED IN THE UNIT CONTRACT PRICE BID FOR CONCRETE BARRIER RAIL.

THE 1 1/4" Ø HOLES SHALL BE FORMED OR DRILLED WITH A CORE BIT. IMPACT TOOLS WILL NOT BE PERMITTED. ANY CONCRETE DAMAGED BY THIS WORK SHALL BE REPAIRED TO THE SATISFACTION OF THE ENGINEER.

THE C6 X 8.2 RUBRAIL IS TO BE ADHESIVELY ANCHORED TO THE RAIL USING THREE 3/4" Ø X 6" BOLTS WITH WASHERS. LEVEL ONE FIELD TESTING IS REQUIRED, AND THE YIELD LOAD OF THE 3/4" Ø BOLT IS 12 KIPS. FOR ADHESIVELY ANCHORED ANCHOR BOLTS OR DOWELS, SEE STANDARD SPECIFICATIONS. SEE ROADWAY STANDARD 862.03 FOR DETAILS AND LOCATION OF THE RUBRAIL.

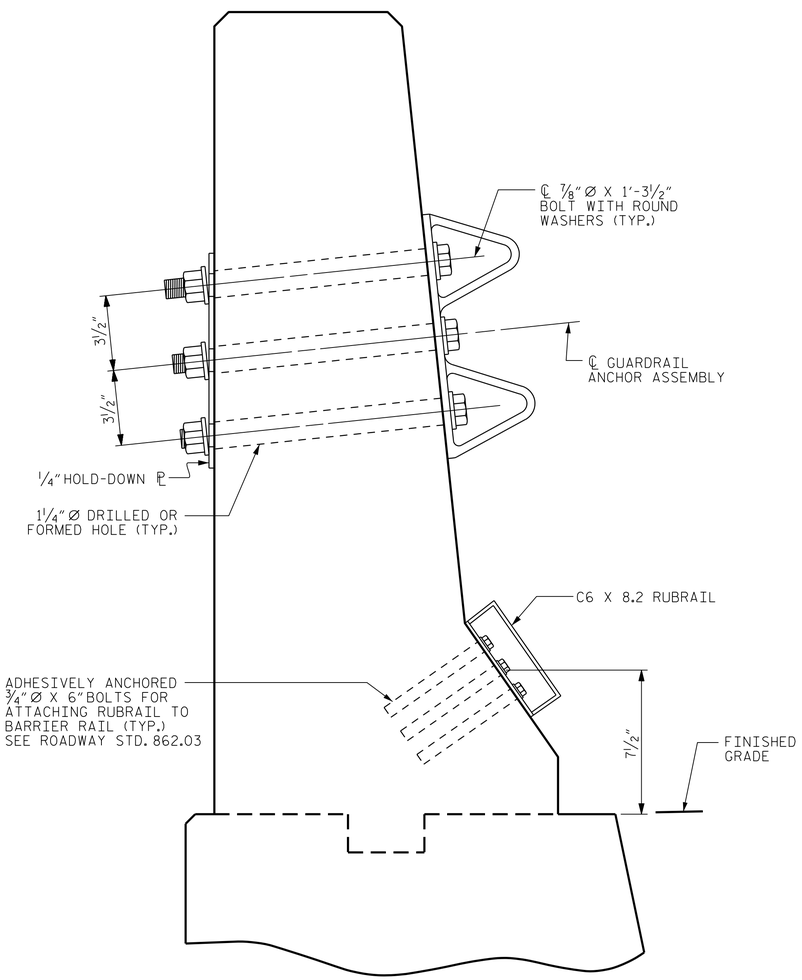

SECTION E-E

GUARDRAIL ANCHOR ASSEMBLY DETAILS

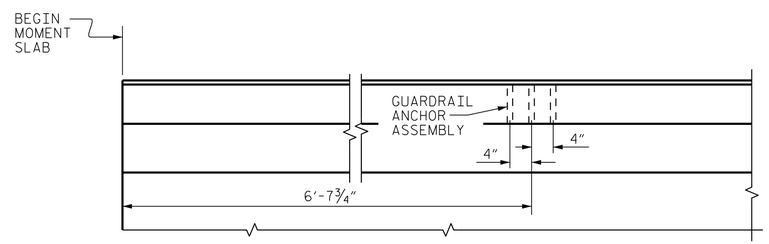

PLAN

LOCATION OF ANCHORS FOR GUARDRAIL

BEGIN MOMENT SLAB SHOWN, END MOMENT SLAB SIMILAR

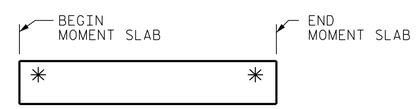

SKETCH SHOWING POINTS OF ATTACHMENTS

✳ DENOTES GUARDRAIL ANCHOR ASSEMBLY

PROJECT NO. I-40 REPAIRS
NEW HANOVER COUNTY
STATION: 17+30 -RPD-

SHEET 3 OF 3

STATE OF NORTH CAROLINA
DEPARTMENT OF TRANSPORTATION
RALEIGH

SITE 2619
STANDARD

GUARDRAIL ANCHORAGE FOR BARRIER RAIL

ASSEMBLED BY :		DATE :			
CHECKED BY :		DATE :			
DRAWN BY : TLA	5/06	REV. 7/12	MAA/GM		
CHECKED BY : GM	5/06	REV. 6/13	MAA/GM		
		REV. 12/17	MAA/THC		

FILE: $FILES STIMES
DATE: $DATES

DRAWN BY :	JBT	DATE :	1-20
CHECKED BY :	JHN	DATE :	2-20
DESIGN ENGINEER :	JBT	DATE :	1-20

PLANS PREPARED BY :
PARSONS
5540 Centerview Drive, Suite 217
Raleigh, NC 27606-3386
NC LICENSE No. F-0246
FOR NORTH CAROLINA DEPARTMENT OF TRANSPORTATION

DOCUMENT NOT CONSIDERED FINAL UNLESS ALL SIGNATURES COMPLETED

NORTH CAROLINA PROFESSIONAL SEAL 033698 ENGINEER JOSHUA B. TAYLOR
DocuSigned by: Josh Taylor
23ED8649CA3481...
6/2/2020

REVISIONS						SHEET No.
No.	BY:	DATE:	No.	BY:	DATE:	S-8
1			3			TOTAL SHEETS
2			4			

STD. NO. GRA2