This electronic collection of documents is provided for the convenience of the user and is Not a Certified Document –

The documents contained herein were originally issued and sealed by the individuals whose names and license numbers appear on each page, on the dates appearing with their signature on that page.
This file or an individual page shall not be considered a certified document.

09/08/99

PROJECT: 17BP.3.R.59

CONTRACT: DC00210

See Sheet 1-A For Index of Sheets
See Sheet 1-B For Conventional Symbols

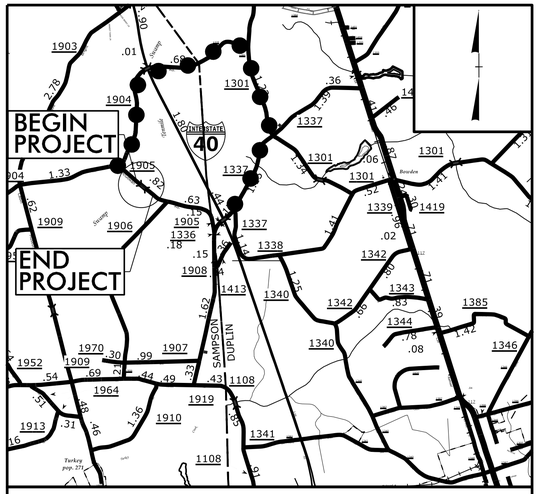

VICINITY MAP

DETOUR ROUTE

N.T.S.

STATE OF NORTH CAROLINA
DIVISION OF HIGHWAYS

SAMPSON COUNTY

STATE	STATE PROJECT REFERENCE NO.	SHEET NO.	TOTAL SHEETS
N.C.	17BP.3.R.59	1	53

STATE PROJ. NO.	F.A. PROJ. NO.	DESCRIPTION
17BP.3.R.59		P.E.
17BP.3.R.59		ROW/UTIL.
17BP.3.R.59		CONST.

LOCATION: REPLACE BRIDGE 252 OVER TEN MILE SWAMP ON SR 1905 (W. MCGOWAN ROAD)

TYPE OF WORK: GRADING, DRAINAGE, PAVING, AND STRUCTURE

100% PLANS

NAD 83/NA 2011

4

BEGIN PROJECT 17BP.3.R.59
-L- POC STA. 16+50.00

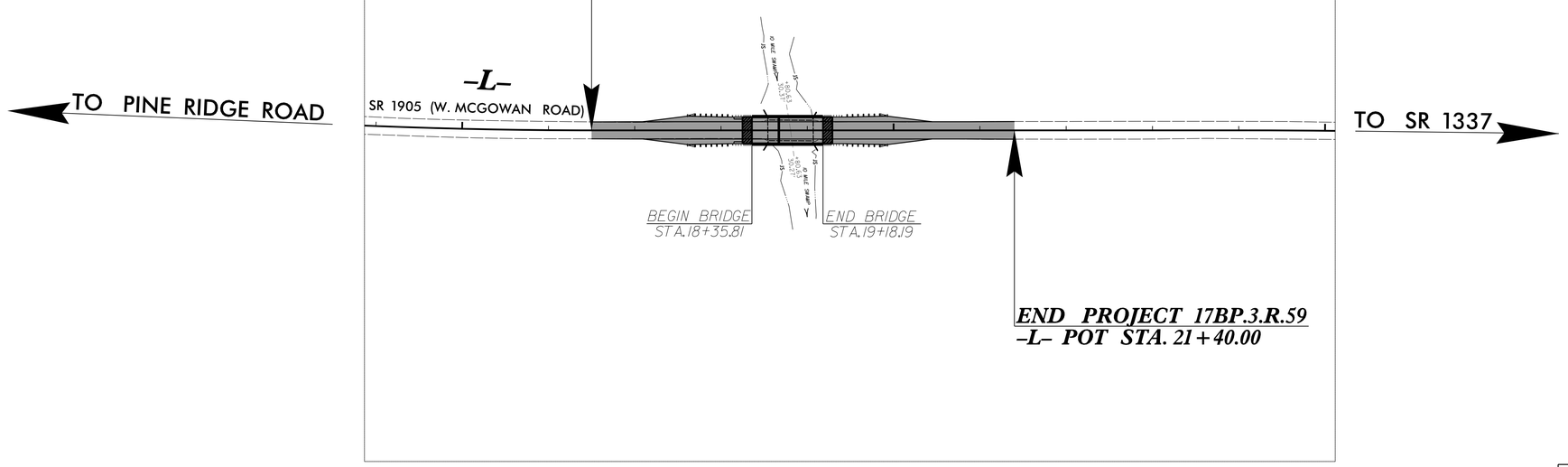

END PROJECT 17BP.3.R.59
-L- POT STA. 21+40.00

DOCUMENT NOT CONSIDERED FINAL UNLESS ALL SIGNATURES COMPLETED

GRAPHIC SCALES

50 25 0 50 100
PLANS

50 25 0 50 100
PROFILE (HORIZONTAL)

5 2.5 0 5 10
PROFILE (VERTICAL)

DESIGN DATA

ADT 2018 = 477 VPD
ADT 2038 = 861 VPD
DHV = N/A
D = N/A
T = N/A
V = 60 MPH

FUNC CLASS =
LOCAL
SUB-REGIONAL TIER

PROJECT LENGTH

LENGTH ROADWAY TIP PROJECT 17BP.3.R.59 = 0.077 MILES
LENGTH BRIDGE TIP PROJECT 17BP.3.R.59 = 0.016 MILES

TOTAL LENGTH TIP PROJECT 17BP.3.R.59 = 0.093 MILES

Prepared In the Office of:

CDM Smith
CDM Smith Inc.
5400 Glenwood Avenue
Suite 400
Raleigh, NC 27612-3228
NC COA No. F-1255

FOR THE NORTH CAROLINA DEPARTMENT OF TRANSPORTATION

2018 STANDARD SPECIFICATIONS

RIGHT OF WAY DATE:
APRIL 06, 2018

LETTING DATE:
SEPTEMBER 6, 2018

DAVID Z. KEISER, PE
PROJECT ENGINEER

ADAM M. CONRAD, PE
PROJECT DESIGN ENGINEER

ALTON R. EDGERTON, PE
NCDOT CONTACT

HYDRAULICS ENGINEER

7/31/2018
NORTH CAROLINA PROFESSIONAL SEAL 030405 ENGINEER D. C. DUFFIELD
DocuSigned by: D. C. Duffield
SIGNATURE: P.E.

ROADWAY DESIGN ENGINEER

7/31/2018
NORTH CAROLINA PROFESSIONAL SEAL 033400 ENGINEER DAVID Z. KEISER
DocuSigned by: David Keiser
SIGNATURE: P.E.

STATE OF NORTH CAROLINA DEPARTMENT OF TRANSPORTATION

-SYSTIME
::\17BP.3.R.59_Rdy_tsh.dgn
USER: KEISERDZ

8/17/99

PROJECT REFERENCE NO.	SHEET NO.
17BP.3.R.59	1-A

DOCUMENT NOT CONSIDERED FINAL UNLESS ALL SIGNATURES COMPLETED

ROADWAY DESIGN ENGINEER

NORTH CAROLINA PROFESSIONAL SEAL 033400 ENGINEER DAVID T. KEISER

5/23/2018 1:25:26 PM EDT

DocuSigned by: David T. Keiser
5FFD082D25FB4D4...

CDM Smith
CDM Smith Inc.
5400 Glenwood Avenue
Suite 400
Raleigh, NC 27612-3225
NC COA No. F-1255

INDEX OF SHEETS

EFF. 01-16-2018
REV.

2018 ROADWAY ENGLISH STANDARD DRAWINGS

The following Roadway Standards as appear in "Roadway Standard Drawings" Highway Design Branch - N. C. Department of Transportation - Raleigh, N. C., Dated January, 2018 are applicable to this project and by reference hereby are considered a part of these plans:

STD.NO.	TITLE
DIVISION 2 - EARTHWORK	
200.03	Method of Clearing - Modified Method III (Use Detail in Lieu of Standard)
225.02	Guide for Grading Subgrade - Secondary and Local
225.04	Method of Obtaining Superelevation - Two Lane Pavement
DIVISION 3 - PIPE CULVERTS	
300.01	Method of Pipe Installation
DIVISION 4 - MAJOR STRUCTURES	
422.02	Bridge Approach Fills - Type II Modified Approach Fill
DIVISION 5 - SUBGRADE, BASES AND SHOULDERS	
560.01	Method of Shoulder Construction - High Side of Superelevated Curve - Method I
DIVISION 8 - INCIDENTALS	
840.29	Frames and Narrow Slot Flat Grates
840.35	Traffic Bearing Grated Drop Inlet - for Cast Iron Double Frame and Grates
846.01	Concrete Curb, Gutter and Curb & Gutter
846.04	Drop Inlet Installation in Shoulder Berm Gutter
862.01	Guardrail Placement
862.02	Guardrail Installation
862.03	Structure Anchor Units
876.02	Guide for Rip Rap at Pipe Outlets
876.04	Drainage Ditches with Class 'B' Rip Rap

GENERAL NOTES:

2018 SPECIFICATIONS
EFFECTIVE: 01-16-2018
REVISED:

GRADING AND SURFACING:

THE GRADE LINES SHOWN DENOTE THE FINISHED ELEVATION OF THE PROPOSED SURFACING AT GRADE POINTS SHOWN ON THE TYPICAL SECTIONS. GRADE LINES MAY BE ADJUSTED AT THEIR BEGINNING AND ENDING AND AT STRUCTURES AS DIRECTED BY THE ENGINEER IN ORDER TO SECURE A PROPER TIE-IN.

CLEARING:

CLEARING ON THIS PROJECT SHALL BE PERFORMED TO THE LIMITS ESTABLISHED BY MODIFIED METHOD III.

SUPERELEVATION:

ALL CURVES ON THIS PROJECT SHALL BE SUPERELEVATED IN ACCORDANCE WITH STD. NO. 225.04 USING THE RATE OF SUPERELEVATION AND RUNOFF SHOWN ON THE PLANS. SUPERELEVATION IS TO BE REVOLVED ABOUT THE GRADE POINTS SHOWN ON THE TYPICAL SECTIONS.

SHOULDER CONSTRUCTION:

ASPHALT, EARTH, AND CONCRETE SHOULDER CONSTRUCTION ON THE HIGH SIDE OF SUPERELEVATED CURVES SHALL BE IN ACCORDANCE WITH STD. NO. 560.01

GUARDRAIL:

THE GUARDRAIL LOCATIONS SHOWN ON THE PLANS MAY BE ADJUSTED DURING CONSTRUCTION AS DIRECTED BY THE ENGINEER. THE CONTRACTOR SHOULD CONSULT WITH THE ENGINEER PRIOR TO ORDERING GUARDRAIL MATERIAL.

END BENTS:

THE ENGINEER SHALL CHECK THE STRUCTURE END BENT PLANS, DETAILS, AND CROSS-SECTION PRIOR TO SETTING OF THE SLOPE STAKES FOR THE EMBANKMENT OR EXCAVATION APPROACHING A BRIDGE.

UTILITIES:

UTILITY OWNERS ON THIS PROJECT ARE

SOUTH RIVER ELECTRICAL MEMBERSHIP CORPORATION
SAMPSON COUNTY PUBLIC WORKS
STAR TELEPHONE MEMBERSHIP CORPORATION

RIGHT-OF-WAY MARKERS:

ALL RIGHT-OF-WAY MARKERS AND PERMANENT EASEMENT MARKERS ARE TO BE PLACED BY L&S. THE CONTRACT SURVEYOR WILL BE RESPONSIBLE RESETTING ANY POINTS DISTURBED DURING CONSTRUCTION.

-SYSTIME
-V8DGN 17BP.3.R.59_Rdy_psh_1A.dgn
-USERNAME

12/2/2016

PROJECT REFERENCE NO.	SHEET NO.
17BP.3.R.59	1-B

STATE OF NORTH CAROLINA, DIVISION OF HIGHWAYS

CONVENTIONAL PLAN SHEET SYMBOLS

Note: Not to Scale

S.U.E. = *Subsurface Utility Engineering

BOUNDARIES AND PROPERTY:

- State Line
- County Line
- Township Line
- City Line
- Reservation Line
- Property Line
- Existing Iron Pin — EIP
- Computed Property Corner
- Property Monument — ECM
- Parcel/Sequence Number — 123
- Existing Fence Line
- Proposed Woven Wire Fence
- Proposed Chain Link Fence
- Proposed Barbed Wire Fence
- Existing Wetland Boundary — WLB
- Proposed Wetland Boundary — WLB
- Existing Endangered Animal Boundary — EAB
- Existing Endangered Plant Boundary — EPB
- Existing Historic Property Boundary — HPB
- Known Contamination Area: Soil — S
- Potential Contamination Area: Soil — S
- Known Contamination Area: Water — W
- Potential Contamination Area: Water — W
- Contaminated Site: Known or Potential

BUILDINGS AND OTHER CULTURE:

- Gas Pump Vent or U/G Tank Cap
- Sign — S
- Well — W
- Small Mine
- Foundation
- Area Outline
- Cemetery
- Building
- School
- Church
- Dam

HYDROLOGY:

- Stream or Body of Water
- Hydro, Pool or Reservoir
- Jurisdictional Stream — JS
- Buffer Zone 1 — BZ 1
- Buffer Zone 2 — BZ 2
- Flow Arrow
- Disappearing Stream
- Spring
- Wetland
- Proposed Lateral, Tail, Head Ditch — FLOW
- False Sump

RAILROADS:

- Standard Gauge — CSX TRANSPORTATION
- RR Signal Milepost — MILEPOST 35
- Switch — SWITCH
- RR Abandoned
- RR Dismantled

RIGHT OF WAY & PROJECT CONTROL:

- Secondary Horiz and Vert Control Point
- Primary Horiz Control Point
- Primary Horiz and Vert Control Point
- Exist Permanent Easment Pin and Cap
- New Permanent Easement Pin and Cap
- Vertical Benchmark
- Existing Right of Way Marker
- Existing Right of Way Line
- New Right of Way Line — RW
- New Right of Way Line with Pin and Cap — RW
- New Right of Way Line with Concrete or Granite R/W Marker — RW
- New Control of Access Line with Concrete C/A Marker — CA
- Existing Control of Access — CA
- New Control of Access — CA
- Existing Easement Line — E
- New Temporary Construction Easement — E
- New Temporary Drainage Easement — TDE
- New Permanent Drainage Easement — PDE
- New Permanent Drainage / Utility Easement — DUE
- New Permanent Utility Easement — PUE
- New Temporary Utility Easement — TUE
- New Aerial Utility Easement — AUE

ROADS AND RELATED FEATURES:

- Existing Edge of Pavement
- Existing Curb
- Proposed Slope Stakes Cut — C
- Proposed Slope Stakes Fill — F
- Proposed Curb Ramp — CR
- Existing Metal Guardrail — T
- Proposed Guardrail — T
- Existing Cable Guiderail
- Proposed Cable Guiderail
- Equality Symbol
- Pavement Removal

VEGETATION:

- Single Tree
- Single Shrub
- Hedge
- Woods Line
- Orchard
- Vineyard — Vineyard

EXISTING STRUCTURES:

MAJOR:

- Bridge, Tunnel or Box Culvert — CONC
- Bridge Wing Wall, Head Wall and End Wall — CONC WW

MINOR:

- Head and End Wall — CONC HW
- Pipe Culvert
- Footbridge
- Drainage Box: Catch Basin, DI or JB — CB
- Paved Ditch Gutter
- Storm Sewer Manhole — S
- Storm Sewer — S

UTILITIES:

POWER:

- Existing Power Pole
- Proposed Power Pole
- Existing Joint Use Pole
- Proposed Joint Use Pole
- Power Manhole — P
- Power Line Tower
- Power Transformer
- U/G Power Cable Hand Hole
- H-Frame Pole
- U/G Power Line LOS B (S.U.E.*) — P
- U/G Power Line LOS C (S.U.E.*) — P
- U/G Power Line LOS D (S.U.E.*) — P

TELEPHONE:

- Existing Telephone Pole
- Proposed Telephone Pole
- Telephone Manhole — T
- Telephone Pedestal — T
- Telephone Cell Tower
- U/G Telephone Cable Hand Hole — HH
- U/G Telephone Cable LOS B (S.U.E.*) — T
- U/G Telephone Cable LOS C (S.U.E.*) — T
- U/G Telephone Cable LOS D (S.U.E.*) — T
- U/G Telephone Conduit LOS B (S.U.E.*) — TC
- U/G Telephone Conduit LOS C (S.U.E.*) — TC
- U/G Telephone Conduit LOS D (S.U.E.*) — TC
- U/G Fiber Optics Cable LOS B (S.U.E.*) — T FO
- U/G Fiber Optics Cable LOS C (S.U.E.*) — T FO
- U/G Fiber Optics Cable LOS D (S.U.E.*) — T FO

WATER:

- Water Manhole — W
- Water Meter
- Water Valve
- Water Hydrant
- U/G Water Line LOS B (S.U.E*) — W
- U/G Water Line LOS C (S.U.E*) — W
- U/G Water Line LOS D (S.U.E*) — W
- Above Ground Water Line — A/G Water

TV:

- TV Pedestal — C
- TV Tower
- U/G TV Cable Hand Hole — HH
- U/G TV Cable LOS B (S.U.E.*) — TV
- U/G TV Cable LOS C (S.U.E.*) — TV
- U/G TV Cable LOS D (S.U.E.*) — TV
- U/G Fiber Optic Cable LOS B (S.U.E.*) — TV FO
- U/G Fiber Optic Cable LOS C (S.U.E.*) — TV FO
- U/G Fiber Optic Cable LOS D (S.U.E.*) — TV FO

GAS:

- Gas Valve
- Gas Meter
- U/G Gas Line LOS B (S.U.E.*) — G
- U/G Gas Line LOS C (S.U.E.*) — G
- U/G Gas Line LOS D (S.U.E.*) — G
- Above Ground Gas Line — A/G Gas

SANITARY SEWER:

- Sanitary Sewer Manhole
- Sanitary Sewer Cleanout
- U/G Sanitary Sewer Line — SS
- Above Ground Sanitary Sewer — A/G Sanitary Sewer
- SS Forced Main Line LOS B (S.U.E.*) — FSS
- SS Forced Main Line LOS C (S.U.E.*) — FSS
- SS Forced Main Line LOS D (S.U.E.*) — FSS

MISCELLANEOUS:

- Utility Pole
- Utility Pole with Base
- Utility Located Object
- Utility Traffic Signal Box — S
- Utility Unknown U/G Line LOS B (S.U.E.*) — ?UTL
- U/G Tank; Water, Gas, Oil
- Underground Storage Tank, Approx. Loc. — UST
- A/G Tank; Water, Gas, Oil
- Geoenvironmental Boring
- U/G Test Hole LOS A (S.U.E.*)
- Abandoned According to Utility Records — AATUR
- End of Information — E.O.I.

PROJECT REFERENCE NO.	SHEET NO.
17BP.3.R.59	1C

Location and Surveys

PROJECT SURVEYOR

SURVEY CONTROL SHEET 81_0252

W/ EXISTING CENTERLINE ALIGNMENTS PRIOR TO CONSTRUCTION

DATUM DESCRIPTION

THE LOCALIZED COORDINATE SYSTEM DEVELOPED FOR THIS PROJECT IS BASED ON THE STATE PLANE COORDINATES ESTABLISHED BY NCDOT FOR MONUMENT "GPS-2"
WITH NAD 83/NA 2011 STATE PLANE GRID COORDINATES OF
NORTHING: 477253.897(ft) EASTING: 2246499.241(ft)
ELEVATION: 147.03(ft)
THE AVERAGE COMBINED GRID FACTOR USED ON THIS PROJECT (GROUND TO GRID) IS: 0.99987671
THE N.C. LAMBERT GRID BEARING AND LOCALIZED HORIZONTAL GROUND DISTANCE FROM "GPS-2" TO -L- STATION 16+53.40 BP IS
S 50° 01′ 59″ E 1022.95′
ALL LINEAR DIMENSIONS ARE LOCALIZED HORIZONTAL DISTANCES
VERTICAL DATUM USED IS NAVD 88

BL

POINT	DESC.	NORTH	EAST	ELEVATION
GPS1	GPS CAP & REBAR	477887.1110	2245770.4650	158.38
GPS2	GPS CAP & REBAR	477253.8970	2246499.2410	147.03
BL100	TRV CAP & REBAR	476972.2170	2246820.3950	137.18
BL101	TRV CAP & REBAR	476727.3990	2247102.4080	131.06
BL102	TRV CAP & REBAR	476469.1530	2247423.2530	127.47
BL103	TRV CAP & REBAR	476097.5520	2247891.0140	144.40
BL104	TRV CAP & REBAR	475817.2400	2248231.0940	156.97

****
BM1 ELEVATION = 126.96
N 476390 E 2247491
RR SPIKE IN 18"GUM
****

****
BM2 ELEVATION = 149.69
N 476217 E 2247816
RR SPIKE IN 16" OAK
****

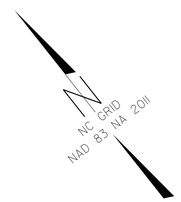

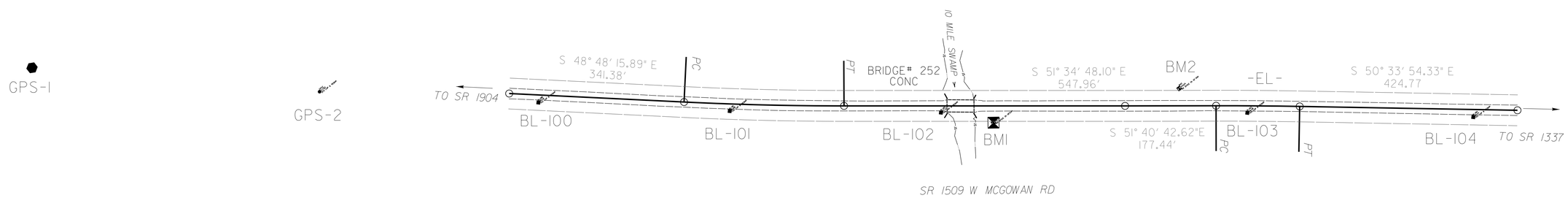

EL

POINT	N	E	BEARING	DIST	DELTA	D	L	T	R
POT	477021.390	2246786.704							
LINE			S 48°48′15.9″ E	341.38					
PC	476796.546	2247043.582							
CURVE			S 50°11′32.0″ E	312.03	02°46′32.2″(LT)	00°53′22.0″	312.06	156.06	6441.68
PT	476596.781	2247283.281							
LINE			S 51°34′48.1″ E	547.96					
POT	476256.265	2247712.597							
LINE			S 51°40′42.6″ E	177.44					
PC	476146.238	2247851.808							
CURVE			S 51°07′18.5″ E	163.03	01°06′48.3″(RT)	00°40′58.6″	163.03	81.52	8389.67
PT	476043.909	2247978.725							
LINE			S 50°33′54.3″ E	424.77					
POT	475774.094	2248306.796							

NOTES:

1. IF FURTHER INFORMATION REGARDING PROJECT CONTROL IS NEEDED, PLEASE CONTACT THE LOCATION AND SURVEYS UNIT.

2. PROJECT CONTROL WAS ESTABLISHED USING GNSS, THE GLOBAL NAVIGATION SATELLITE SYSTEM.

NOTE: DRAWING NOT TO SCALE

6/2/99

-SYSTIME
17BP.3.R.59 Rdy.psh_1C.dgn

PROJECT REFERENCE NO.	SHEET NO.
17BP.3.R.59	1D
Location and Surveys	

PROJECT SURVEYOR

PROPOSED ALIGNMENT CONTROL SHEET 81_0252

L

TYPE	STATION	NORTH	EAST
POT	10+00.00	477021.3900	2246786.7045
PC	13+41.42	476796.5188	2247043.6128
PT	16+53.40	476596.8065	2247283.2487
PC	24+11.18	476125.9079	2247876.9496
PT	25+59.80	476032.5258	2247992.5659
POT	29+66.65	475774.0940	2248306.7955

NOTES:

1. IF FURTHER INFORMATION REGARDING PROJECT CONTROL IS NEEDED, PLEASE CONTACT THE LOCATION AND SURVEYS UNIT.

2. PROJECT CONTROL WAS ESTABLISHED USING GNSS, THE GLOBAL NAVIGATION SATELLITE SYSTEM.

NOTE: DRAWING NOT TO SCALE

6/2/99

PROPOSED ALIGNMENT CONTROL SHEET 81_0252

PROJECT REFERENCE NO.	SHEET NO.
17BP.3.R.59	1E
Location and Surveys	

PROJECT SURVEYOR

ROW MARKER IRON PIN AND CAP-E

ALIGN	STATION	OFFSET	NORTH	EAST
L	18+10.00	-30.00	476522.9954	2247424.5850
L	18+10.00	-50.00	476538.6649	2247437.0134
L	18+10.00	30.00	476475.9868	2247387.2997
L	18+10.00	45.00	476464.2346	2247377.9784
L	18+50.00	-50.00	476513.8081	2247468.3525
L	18+50.00	-30.00	476498.1385	2247455.9240
L	18+50.00	45.00	476439.3778	2247409.3175
L	18+50.00	30.00	476451.1299	2247418.6388

ROW MARKER PERMANENT EASEMENT-E

ALIGN	STATION	OFFSET	NORTH	EAST
L	20+50.00	65.00	476299.4241	2247553.5844
L	20+50.00	30.00	476326.8458	2247575.3342
L	20+50.00	-35.00	476377.7717	2247615.7265
L	20+50.00	-30.00	476373.8544	2247612.6194
L	20+60.00	-50.00	476383.3097	2247632.8826
L	20+75.00	65.00	476283.8885	2247573.1714
L	20+80.00	50.00	476292.5336	2247586.4101
L	20+80.00	-45.00	476366.9639	2247645.4450
L	21+00.00	-45.00	476354.5355	2247661.1146
L	21+35.00	-30.00	476321.0336	2247679.2150
L	21+60.00	30.00	476258.4894	2247661.5166

NOTES:

1. IF FURTHER INFORMATION REGARDING PROJECT CONTROL IS NEEDED, PLEASE CONTACT THE LOCATION AND SURVEYS UNIT.

2. PROJECT CONTROL WAS ESTABLISHED USING GNSS, THE GLOBAL NAVIGATION SATELLITE SYSTEM.

NOTE: DRAWING NOT TO SCALE

6/2/99

PROJECT REFERENCE NO.	SHEET NO.
17BP.3.R.59	2A-1
ROADWAY DESIGN ENGINEER	PAVEMENT DESIGN ENGINEER

NORTH CAROLINA PROFESSIONAL SEAL 033400 ENGINEER DAVID W. KEISER
5/2/2023 1:25:26 PM EDT
DocuSigned by: David W. Keiser
5FFD0B2D25FB4D4...

CDM Smith Inc.
5400 Glenwood Avenue
Suite 400
Raleigh, NC 27612-3228
NC COA No. F-1255

DOCUMENT NOT CONSIDERED FINAL UNLESS ALL SIGNATURES COMPLETED

PAVEMENT SCHEDULE

(FINAL PAVEMENT DESIGN)

C1	PROP. APPROX. 1.5″ ASPHALT CONCRETE SURFACE COURSE, TYPE S9.5B, AT AN AVERAGE RATE OF 165 LBS. PER SQ. YD.
C2	PROP. APPROX. 3″ ASPHALT CONCRETE SURFACE COURSE, TYPE S9.5B, AT AN AVERAGE RATE OF 165 LBS. PER SQ. YD. IN EACH OF TWO LAYERS.
C3	PROP. VAR. DEPTH ASPHALT CONCRETE SURFACE COURSE, TYPE S9.5B, AT AN AVERAGE RATE OF 110 LBS. PER SQ. YD. PER 1″ DEPTH. TO BE PLACED IN LAYERS NOT LESS THAN 1.0″ IN DEPTH OR GREATER THAN 1.5″ IN DEPTH.
E1	PROP. APPROX. 5.5″ ASPHALT CONCRETE BASE COURSE, TYPE B25.0C, AT AN AVERAGE RATE OF 627 LBS. PER SQ. YD.
E2	PROP. VAR. DEPTH ASPHALT CONCRETE BASE COURSE, TYPE B25.0C, AT AN AVERAGE RATE OF 114 LBS. PER SQ. YD. PER 1″ DEPTH. TO BE PLACED IN LAYERS NOT LESS THAN 3″ IN DEPTH OR GREATER THAN 5.5″ IN DEPTH.
R1	SHOULDER BERM GUTTER
T	EARTH MATERIAL.
U	EXISTING PAVEMENT.
V	MILL ASPHALT PAVEMENT, 0″ TO 1.5″
W	VARIABLE DEPTH ASPHALT PAVEMENT (SEE -L- WEDGING DETAIL)

NOTE: ALL PAVEMENT EDGE SLOPES ARE 1:1 UNLESS SHOWN OTHERWISE.

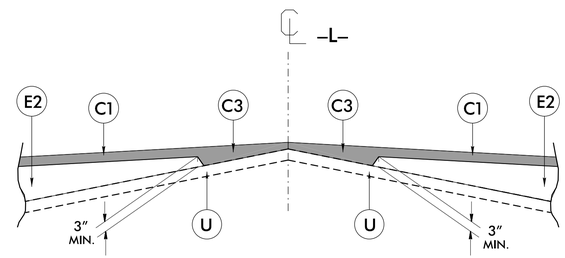

Detail Showing Method Of Wedging – W
–L–

MILLING DETAIL
INCIDENTAL MILLING AT BEGIN/END FOR TIE–INS

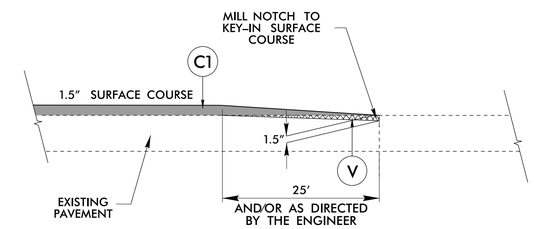

–L– STA. 16+50.00 TO STA. 16+75.00
–L– STA. 21+15.00 TO STA. 21+40.00

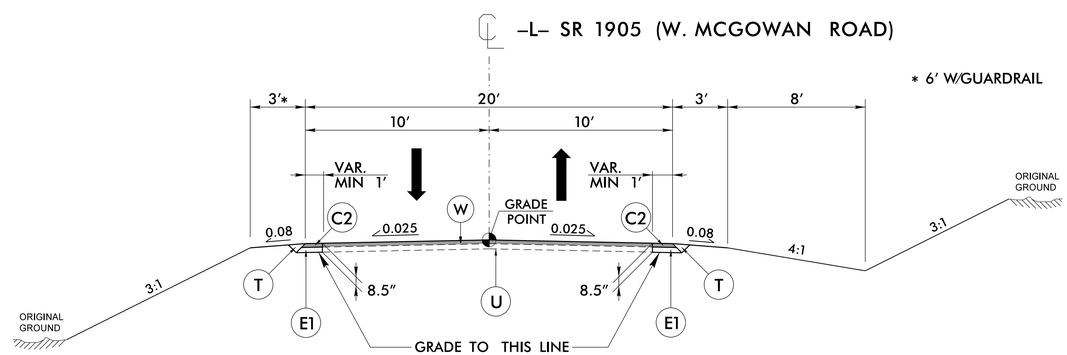

TYPICAL SECTION NO. 1

USE TYPICAL SECTION NO. 1

–L– STA. 16+50.00 TO STA. 17+13.60
–L– STA. 20+46.40 TO STA. 21+40.00

SYSTIME
17BP.3.R.59_Rdy_typ.dgn
ITS-PLANNING

6/2/99

PROJECT REFERENCE NO.	SHEET NO.
17BP.3.R.59	2A-2
ROADWAY DESIGN ENGINEER	PAVEMENT DESIGN ENGINEER

NORTH CAROLINA PROFESSIONAL SEAL 033400 ENGINEER DAVID M. KEISER

5/22/2020 1:25:26 PM EDT

DocuSigned by: David Keiser 5FFD0B2D25FB4D4...

CDM Smith
CDM Smith Inc.
5400 Glenwood Avenue
Suite 400
Raleigh, NC 27612-3228
NC COA No. F-1255

DOCUMENT NOT CONSIDERED FINAL UNLESS ALL SIGNATURES COMPLETED

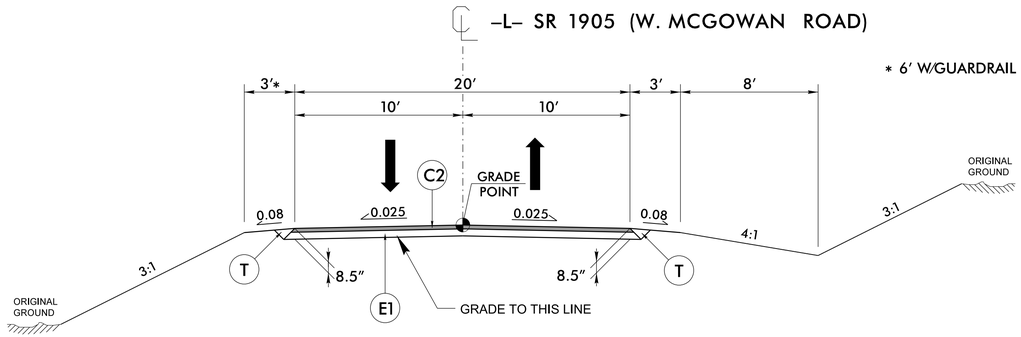

TYPICAL SECTION NO. 2

USE TYPICAL SECTION NO. 2

–L– STA. 17+13.60 TO STA. 18+35.81 (BEGIN BRIDGE)
–L– STA. 19+18.19 (END BRIDGE) TO STA 20+46.40

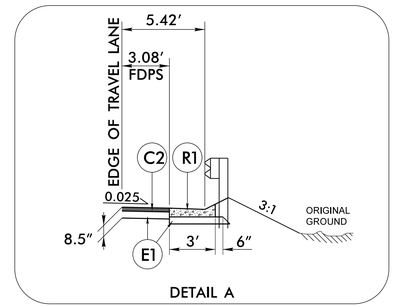

DETAIL A

USE DETAIL A IN CONJUNCTION WITH TYPICAL SECTION NO. 2

–L– STA. 18+15.00 TO STA. 18+24.94 (LT)
–L– STA. 18+15.00 TO STA. 18+24.94 (RT)

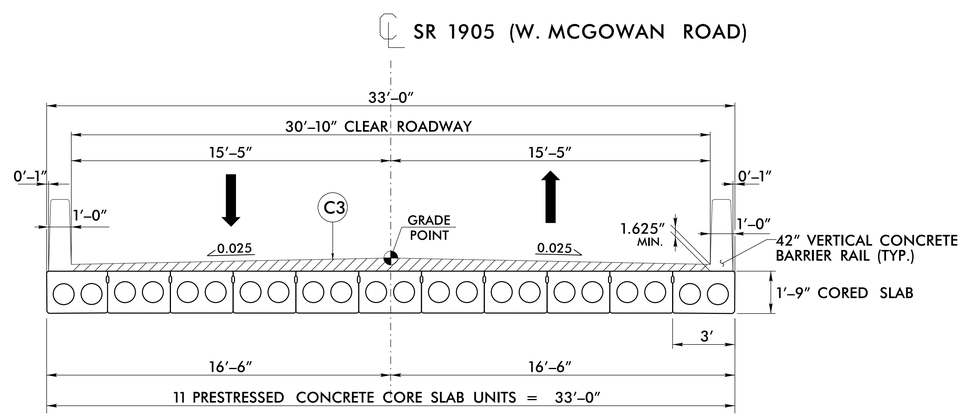

TYPICAL SECTION NO. 3

USE BRIDGE TYPICAL SECTION NO. 3

–L– STA. 18+35.81 (BEGIN BRIDGE) TO STA. 19+18.19 (END BRIDGE)

PAVEMENT SCHEDULE
(PRELIMINARY PAVEMENT DESIGN)

C1	1.5″ S9.5B
C2	3″ S9.5B
C3	VAR. S9.5B
E1	5.5″ B25.0C
E2	VAR. B25.0C
R1	SBG
T	EARTH MATERIAL
U	EXIST. PAVEMENT
V	MILL ASPHALT PAVEMENT, 0″-1.5″
W	WEDGING

PAVEMENT EDGESLOPES 1:1 UNLESS NOTED OTHERWISE

-SYSTIME
-SYS-17BP.3.R.59_Rdy_typ.dgn
-USER-KAMMA

5/14/99

STATE OF NORTH CAROLINA
DEPT. OF TRANSPORTATION
DIVISION OF HIGHWAYS
RALEIGH, N.C.

ENGLISH DETAIL DRAWING FOR
METHOD OF CLEARING
MODIFIED METHOD - III

SHEET 1 OF 1
200D03

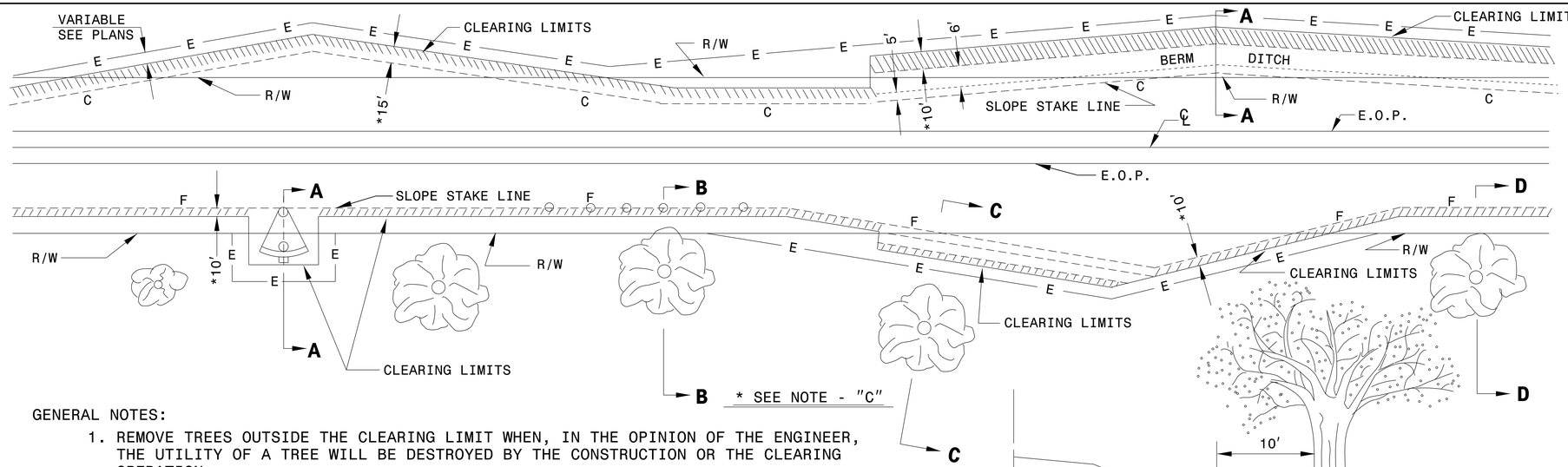

GENERAL NOTES:

1. REMOVE TREES OUTSIDE THE CLEARING LIMIT WHEN, IN THE OPINION OF THE ENGINEER, THE UTILITY OF A TREE WILL BE DESTROYED BY THE CONSTRUCTION OR THE CLEARING OPERATION.
2. CLEAR IN ACCORDANCE WITH THIS STANDARD EXCEPT WHERE ADDITIONAL CLEARING IS REQUIRED FOR SAFETY AS SHOWN ON THE PLANS.

METHOD III CLEARING LIMITS

(A) CUTS -- CLEAR TO CONSTRUCTION LIMITS.
(B) FILLS - CLEAR TO 5'/10' * BEYOND CONSTRUCTION LIMITS, UNLESS SPECIFIED OTHERWISE BY WETLAND PERMIT.
(C) CUTS AND FILLS - WHEN THE CLEARING LIMITS (A AND B) EXCEED THE PROPOSED R/W OR PROPOSED CONSTRUCTION EASEMENTS, THEN CLEAR ONLY TO THE R/W OR CONSTRUCTION EASEMENT WHICHEVER IS GREATER.

* FOR FILL HEIGHTS LESS THAN 10' CLEAR TO 5' BEYOND CONSTRUCTION LIMITS.
* FOR FILL HEIGHTS 10' OR GREATER CLEAR TO 10' BEYOND CONSTRUCTION LIMITS.
** PLACE SILT FENCE AT 5' BEYOND TOE OF SLOPE IN FILL SECTIONS WITH LESS THAN 10'. PLACE SILT FENCE AT 10' BEYOND TOE OF SLOPE IN FILL SECTIONS WITH 10' OR GREATER.

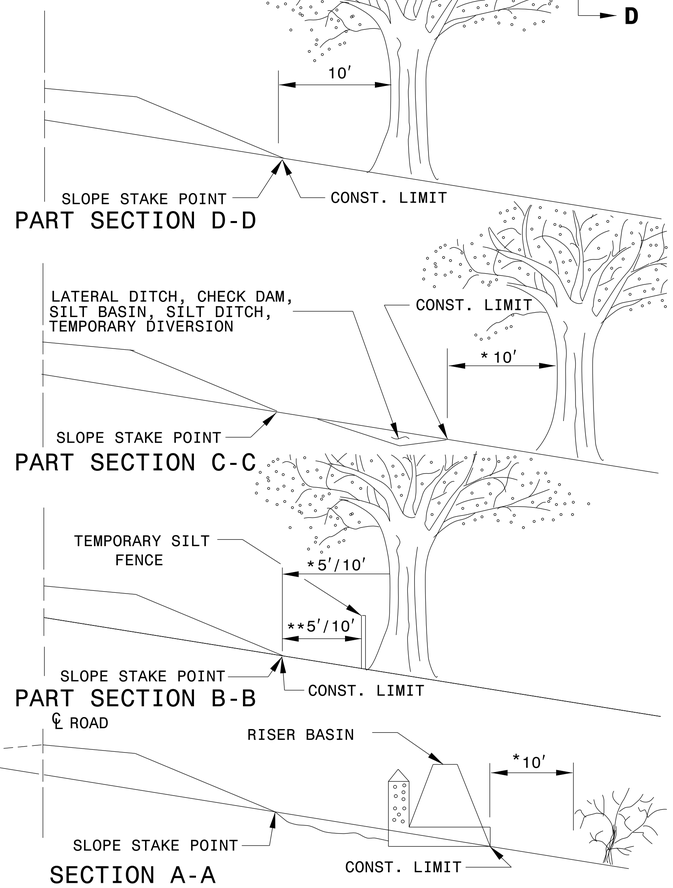

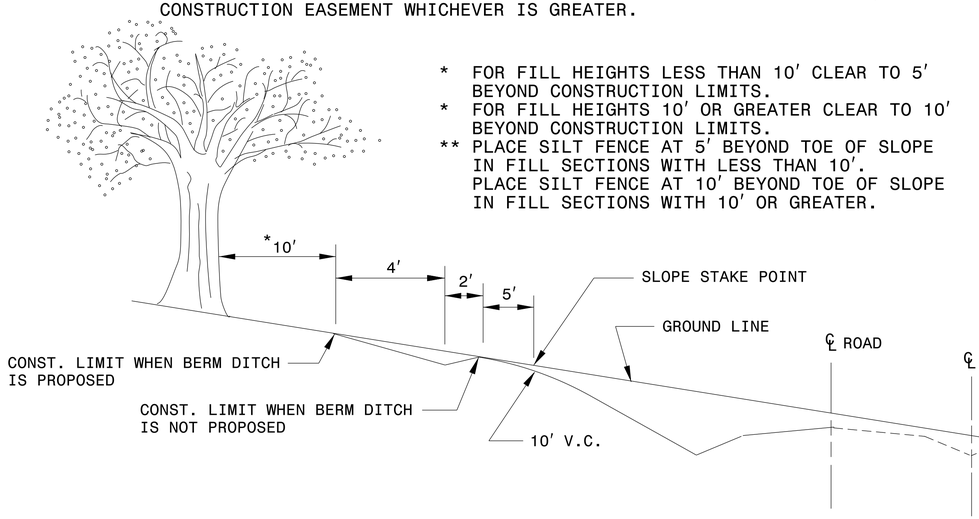

STATE OF NORTH CAROLINA
DEPT. OF TRANSPORTATION
DIVISION OF HIGHWAYS
RALEIGH, N.C.

ENGLISH DETAIL DRAWING FOR
METHOD OF CLEARING
MODIFIED METHOD - III

SHEET 1 OF 1
200D03

CONTRACT STANDARDS AND DEVELOPMENT UNIT
Office 919-707-6950 FAX 919-250-4119

SEE TITLE BLOCK

ORIGINAL BY:	T.S.S.	DATE:	FEB.2000
MODIFIED BY:	K.A.K.	DATE:	AUG.2016
CHECKED BY:		DATE:	
FILE SPEC.:	kkempf/english/0200d301.dgn		

6/21/00

COMPUTED BY: M. GYANT	DATE: 1/15/2018
CHECKED BY: A. CONRAD	DATE: 1/17/2018

PROJECT REFERENCE NO.	SHEET NO.
17BP.3.R.59	3B-1

STATE OF NORTH CAROLINA
DIVISION OF HIGHWAYS

NOTE: Invert Elevations are for Bid Purposes only and shall not be used for project construction stakeout.
See "Standard Specifications For Roads and Structures, Section 300–5".

LIST OF PIPES, ENDWALLS, ETC. (FOR PIPES 48" & UNDER)

STATION / SIZE / THICKNESS OR GAUGE	LOCATION (LT,RT, OR CL)	STRUCTURE NO. FROM	STRUCTURE NO. TO	TOP ELEVATION	INVERT ELEVATION	INVERT ELEVATION	SLOPE CRITICAL	CLASS III R.C. PIPE (UNLESS NOTED OTHERWISE) 12"	CLASS III R.C. PIPE 15"	CLASS III R.C. PIPE 18"	CLASS III R.C. PIPE 24"	CLASS III R.C. PIPE 30"	CLASS III R.C. PIPE 36"	CLASS III R.C. PIPE 42"	CLASS III R.C. PIPE 48"	C.S. PIPE (UNLESS NOTED OTHERWISE) 12" .064	C.S. PIPE 15" .064	C.S. PIPE 18" .064	C.S. PIPE 24" .064	C.S. PIPE 24"	C.S. PIPE 30" .079	C.S. PIPE 30"	C.S. PIPE 36" .079	C.S. PIPE 36"	C.S. PIPE 42" .109	C.S. PIPE 42"	C.S. PIPE 48" .109	C.S. PIPE 48"	CLASS III R.C. PIPE OR ALUMINIZED C.S. PIPE, TYPE IR OR HDPE PIPE, TYPE S OR D 12"	15"	18"	24"	30"	36"	42"	48"	15" SIDE DRAIN PIPE	18" SIDE DRAIN PIPE	24" SIDE DRAIN PIPE	ENDWALLS STD. 838.01, STD. 838.11 OR STD. 838.80 (UNLESS NOTED OTHERWISE) CU. YDS. R.C.P.	ENDWALLS CU. YDS. C.S.P.	QUANTITIES FOR DRAINAGE STRUCTURES PER EACH (0' THRU 5.0')	* TOTAL L.F. FOR PAY QUANTITY SHALL BE COL. 'A' + (1.3 X COL.'B') LIN. *FT. A 5.0' THRU 10.0'	LIN. *FT. B 10.0' AND ABOVE	C.B. STD. 840.01 OR STD. 840.02	FRAME, GRATES AND HOOD STANDARD 840.03 TYPE OF GRATE E	F	G			D.I. STD. 840.14 OR STD. 840.15	D.I. FRAME & GRATE STD. 840.16	G.D.I. TYPE "A" STD. 840.17 OR 840.26	G.D.I. TYPE "B" STD. 840.18 OR 840.27	G.D.I. TYPE "D" STD. 840.19 OR 840.28	G.D.I. FRAME WITH GRATE STD. 840.22	G.D.I. FRAME WITH TWO GRATES STD. 840.22	G.D.I. (N.S.) FRAME WITH GRATE STD. 840.24	G.D.I. (N.S.) FRAME WITH TWO GRATES STD. 840.24	T.B.D.I. TRAFFIC BEARING DI TYPE "B" STD. 840.35	T.B.D.I. (NS) FRAME & TWO GRATES STD 840.29						CORR. STEEL ELBOWS NO. & SIZE	CONC. COLLARS CL. "B" C.Y. STD 840.72	CONC. & BRICK PIPE PLUG, C.Y. STD. 840.71	PIPE REMOVAL LIN.FT.	REMARKS
18+22	LT	0401	–	128.60	–	–																																				1																		1	1										
18+22	LT	0401	0403	–	125.85	120.70	0.007										24′																																																		2				
18+22	RT	0402	–	128.60	–	–																																				1																		1	1										
18+22	RT	0402	0404	–	125.85	123.60	0.007										20′																																																		2				
TOTALS																	44′																									2																		2	2						4				

ABBREVIATIONS

C.B.	CATCH BASIN
N.D.I.	NARROW DROP INLET
D.I.	DROP INLET
G.D.I.	GRATED DROP INLET
G.D.I. (N.S.)	GRATED DROP INLET (NARROW SLOT)
J.B.	JUNCTION BOX
M.H.	MANHOLE
T.B.D.I.	TRAFFIC BEARING DROP INLET
T.B.J.B.	TRAFFIC BEARING JUNCTION BOX

"N" = DISTANCE FROM EDGE OF LANE TO FACE OF GUARDRAIL.
TOTAL SHOULDER WIDTH = DISTANCE FROM EDGE OF TRAVEL LANE TO SHOULDER BREAK POINT.
FLARE LENGTH = DISTANCE FROM LAST SECTION OF PARALLEL GUARDRAIL TO END OF GUARDRAIL.
W = TOTAL WIDTH OF FLARE FROM BEGINNING OF TAPER TO END OF GUARDRAIL.
G = GATING IMPACT ATTENUATOR TYPE 350
NG = NON–GATING IMPACT ATTENUATOR TYPE 350

GUARDRAIL SUMMARY

SURVEY LINE	BEG. STA.	END STA.	LOCATION	LENGTH STRAIGHT	LENGTH SHOP CURVED	LENGTH DOUBLE FACED	WARRANT POINT APPROACH END	WARRANT POINT TRAILING END	"N" DIST. FROM E.O.L.	TOTAL SHOUL. WIDTH	FLARE LENGTH APPROACH END	FLARE LENGTH TRAILING END	W APPROACH END	W TRAILING END	ANCHORS GREU TL–3	ANCHORS III								IMPACT ATTENUATOR TYPE 350 EA	G	NG	SINGLE FACED GUARDRAIL	REMOVE EXISTING GUARDRAIL	REMOVE AND STOCKPILE EXISTING GUARDRAIL	REMARKS
–L–	17+60.81	18+35.81	RT	75.00			18+35.81		5.42	8.42	50.00		1.00		1	1														
–L–	17+60.81	18+35.81	LT	75.00				18+35.81	5.42	8.42		50.00		1.00	1	1														
–L–	19+18.19	19+93.19	RT	75.00				19+18.19	5.42	8.42		50.00		1.00	1	1														
–L–	19+18.19	19+93.19	LT	75.00			19+18.19		5.42	8.42	50.00		1.00		1	1														
			SUBTOTALS	300.00											4	4														
			TYPE III, 4@18.75′	–75.00																										
			GREU TL–3, 4@50.00′	–200.00																										
			PROJECT TOTALS	25.00											4	4														
			SAY	25.00											4	4														
ADDITIONAL GUARDRAIL POSTS = 10 EA																														

-SYSTIME-
...\17BP.3.R.59_Rdy_psh_3B1.dgn
USER: GYANTMN

SUMMARY OF EARTHWORK (CY)

LOCATION	UNCLASSIFIED EXCAVATION	UNDERCUT	EMBT+%	BORROW	WASTE
–L– 16+50.00 – 18+35.81	15		229	214	
–L– 19+18.19 – 21+40.00	10		449	439	
SUBTOTAL	25		678	653	
TOTAL	25		678	653	
PROJECT TOTAL	25		678	653	
EST. 5% TO REPLACE TOP SOIL ON BORROW PIT				33	
GRAND TOTAL	25		678	686	
SAY	100			700	
EST. DDE= 80 CY					

NOTE: Earthwork quantities are calculated by the Roadway Design Unit. These earthwork quantities are based in part on subsurface data provided by the Geotechnical Engineering Unit.

Note: Approximate quantities only. Unclassified Excavation, Borrow Excavation, Fine Grading, Clearing and Grubbing, and Removal of Existing Pavement will be paid for at the contract lump sum price for "Grading."

SUMMARY OF PAVEMENT REMOVAL (SY)

LINE	STATION – STATION	LOCATION	REMOVAL (SY)
–L–	STA. 17+13.60 TO STA. 18+54.25	CL	304
–L–	STA. 19+06.87 TO STA. 20+46.40	CL	312
GRAND TOTAL			616
SAY			620

SUMMARY OF SHOULDER BERM GUTTER (LF)

LINE	STATION – STATION	LOCATION	LENGTH (LF)
–L–	STA. 18+15.00 TO STA. 18+24.94	LT	9.94
–L–	STA. 18+15.00 TO STA. 18+24.94	RT	9.94
GRAND TOTAL			19.88
SAY			20

5/14/99

BRIDGE PAVEMENT RELATIONSHIP SKETCH –L–

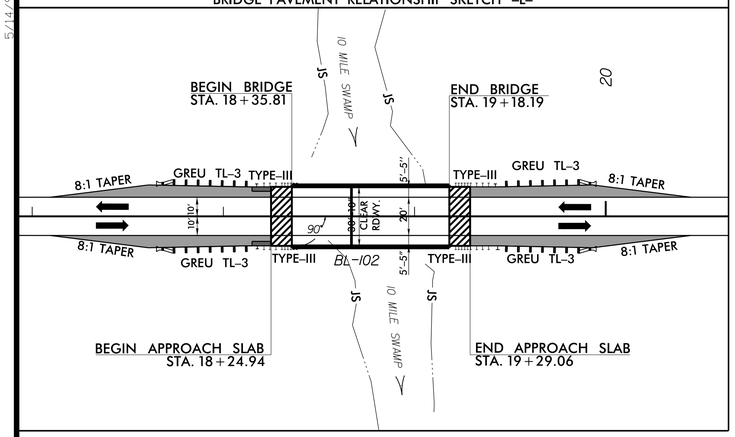

SEE BRIDGE PAVEMENT RELATIONSHIP SKETCH FOR GUARDRAIL, ANCHOR UNITS, AND END UNIT DETAILS.

NAD 83/NA 2011

PROJECT REFERENCE NO.	SHEET NO.
17BP.3.R.59	4
R/W SHEET NO.	

ROADWAY DESIGN ENGINEER
5/25/2018 5:58:04 AM EDT
NORTH CAROLINA PROFESSIONAL SEAL 033400 ENGINEER DAVID Z. KEISER
DocuSigned by: David Z. Keiser
5EFD0B0205F8404...

HYDRAULICS ENGINEER
5/25/2018 5:57:14 AM EDT
NORTH CAROLINA PROFESSIONAL SEAL 030405 ENGINEER D. C. DUFFIELD
DocuSigned by: D. C. Duffield
AE8D494E88CD44A...

CDM Smith — CDM Smith Inc. 5400 Glenwood Avenue Suite 400 Raleigh, NC 27612-3228 NC COA No. F-1255

SUMMIT Design and Engineering Services — Summit Design and Engineering Services 504 Meadowland Drive Hillsborough, NC 27278 NC FIRM LICENSE No: P-0339

DOCUMENT NOT CONSIDERED FINAL UNLESS ALL SIGNATURES COMPLETED

DETAIL 4–1
RIP RAP AT EMBANKMENT
(Not to Scale)

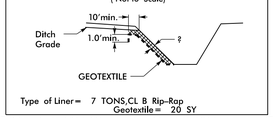

Type of Liner= 7 TONS,CL B Rip-Rap
Geotextile= 20 SY

FROM STA. 20+60 –L– RT TO STA. 20+75 –L– RT

DETAIL 4–2
SPECIAL CUT BASE DITCH
(Not to Scale)

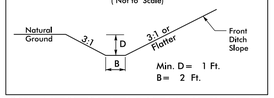

Min. D= 1 Ft.
B= 2 Ft.

FROM STA. 20+85 –L– LT TO STA. 21+40 –L– LT
FROM STA. 20+75 –L– RT TO STA. 21+40 –L– RT

DETAIL 4–3
SPECIAL LATERAL BASE DITCH
(Not to Scale)

Min. D= 1 Ft.
Max. d= 1 Ft.
B= 2 Ft.

TypeofLiner= 8 TONS,CL B Rip-Rap,Geotextile=25 SY

FROM STA. 20+57 TO STA. 20+85–L– LT

BM–2
–L– STA.23+07.00
34.04'LT.EL.149.69
RR SPIKE IN 16" OAK

–L–	
PI Sta 14+97.44	PI Sta 24+85.49
△ = 2° 46' 32.2" (LT)	△ = 1° 00' 53.8" (RT)
D = 0° 53' 22.9"	D = 0° 40' 58.5"
L = 311.98'	L = 148.62'
T = 156.02'	T = 74.31'
R = 6,440.00'	R = 8,390.00'
E = NC	E = NC
RUNOFF = N/A	RUNOFF = N/A
DS = 60 MPH	DS = 60 MPH

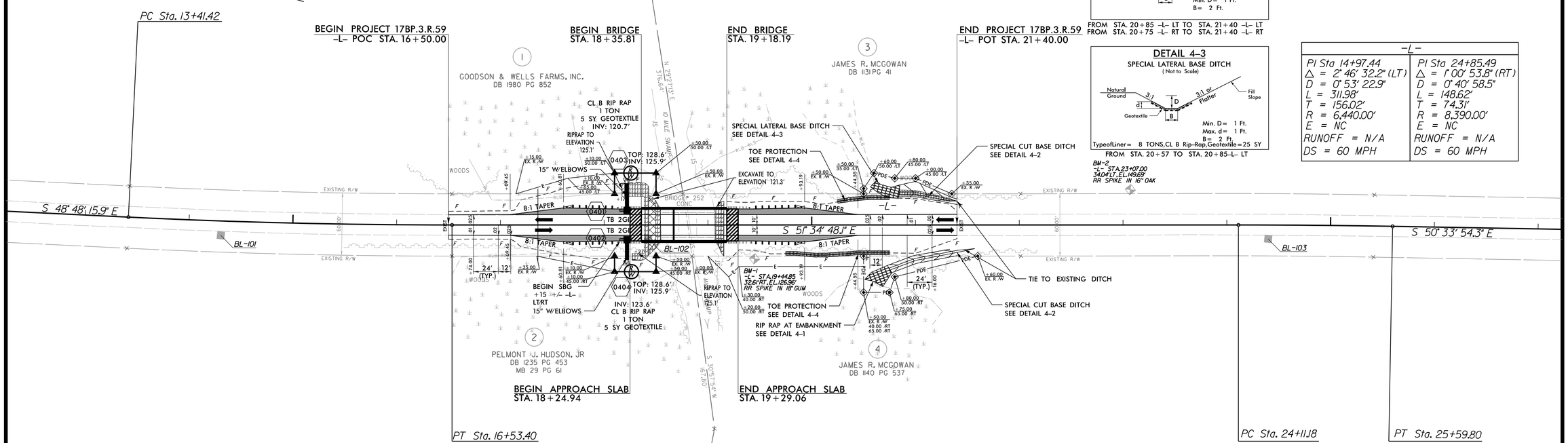

DETAIL 4–4
TOE PROTECTION
(Not to Scale)

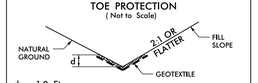

d= 1.0 Ft.

Type of Liner= 20 TON CLASS B Rip-Rap
67 SY GEOTEXTILE

FROM STA. 19+75 TO STA. 20+75 –L– RT
FROM STA. 20+25 TO STA. 20+75 –L– LT

50 25 0 50 100
PLANS

NOTE: SEE SHEET 5 FOR –L– PROFILE

SYSTIME
17BP.3.R.59_Rdy_psh_4
USER: ...

5/14/99

PROJECT REFERENCE NO.	SHEET NO.
17BP.3.R.59	5

ROADWAY DESIGN ENGINEER

5/30/2018 1:25:26 PM PDT

NORTH CAROLINA PROFESSIONAL SEAL 033400 ENGINEER

DocuSigned by: DAVID A. KEISER

5FFD0B2D25FB4D4...

HYDRAULICS ENGINEER

5/29/2018 1:09:57 PM PDT

NORTH CAROLINA PROFESSIONAL SEAL 030405 ENGINEER

DocuSigned by: D. C. DAUFELD

AE8D494EB8CD44A...

CDM Smith — CDM Smith Inc. 5400 Glenwood Avenue Suite 400 Raleigh, NC 27612-3228 NC COA No. F-1255

SUMMIT — Summit Design and Engineering Services 504 Meadowland Drive Hillsborough, NC 27278 NC FIRM LICENSE No: P-0339

DOCUMENT NOT CONSIDERED FINAL UNLESS ALL SIGNATURES COMPLETED

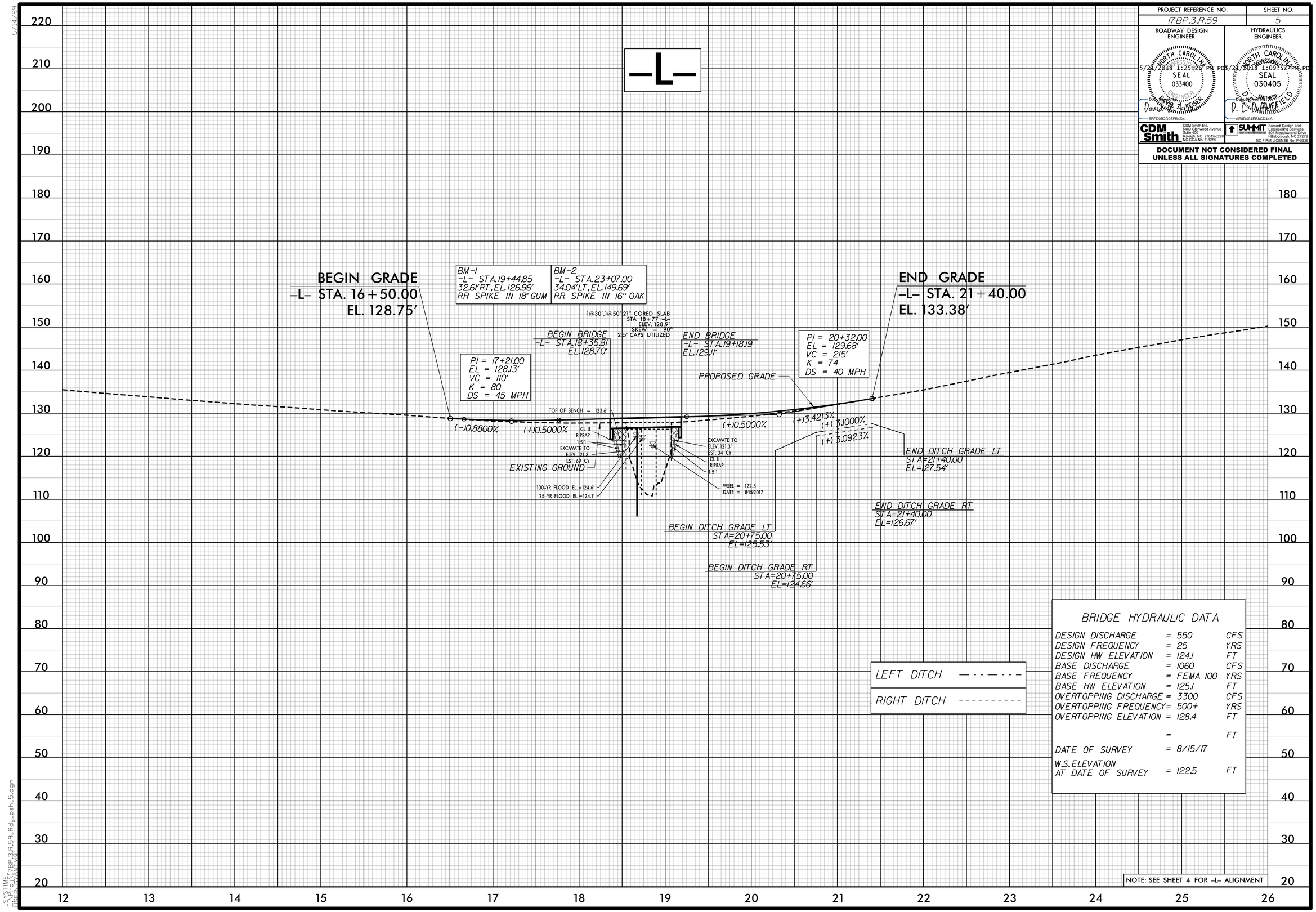

-SYSTIME
itsEPOLAYMN
17BP.3.R.59_Rdy_psh_5.dgn

STATE OF NORTH CAROLINA
DIVISION OF HIGHWAYS

TRANSPORTATION MANAGEMENT PLAN

SAMPSON COUNTY

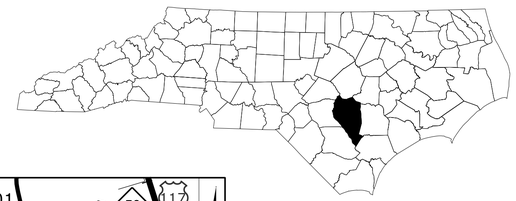

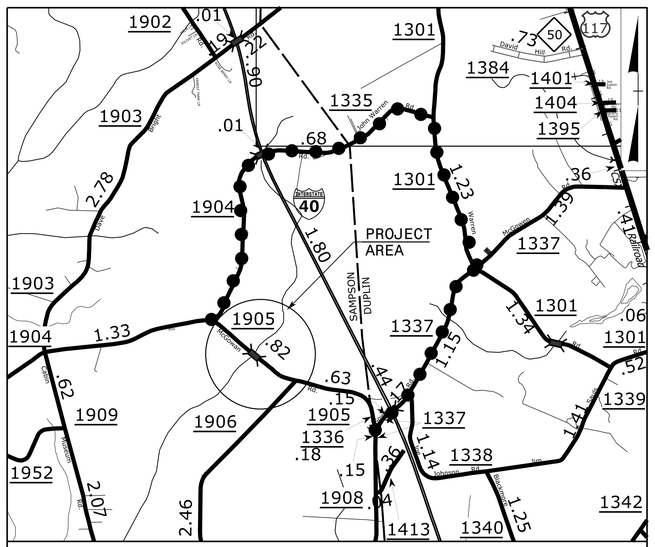

VICINITY MAP

DETOUR ROUTE ●—●—●—● N.T.S.

LOCATION: REPLACE BRIDGE 252 OVER TEN MILE SWAMP ON SR 1905 (W. MCGOWAN ROAD)

INDEX OF SHEETS

SHEET NO.
TMP-1

TIP PROJECT: 17BP.3.R.59

DOCUMENT NOT CONSIDERED FINAL UNLESS ALL SIGNATURES COMPLETED

WORK ZONE SAFETY & MOBILITY
"from the MOUNTAINS to the COAST"

PLANS PREPARED BY:

ADAM CONRAD, P.E.
PROJECT ENGINEER

MONIQUE GYANT, E.I.
PROJECT DESIGN ENGINEER

NCDOT CONTACTS:

J. S. KITE, P.E.
PROJECT ENGINEER

MATTHEW SPRINGER, P.E.
PROJECT DESIGN ENGINEER

CDM Smith Inc.
5400 Glenwood Avenue
Suite 400
Raleigh, NC 27612-3228
NC COA No. F-1255

DIVISION OF HIGHWAYS · STATE OF NORTH CAROLINA · DEPARTMENT OF TRANSPORTATION · WORK ZONE TRAFFIC CONTROL

APPROVED: DocuSigned by: Adam M. Conrad 312C25CC73204E1...

DATE: 5/21/2018 1:12:19 PM PDT

SEAL

NORTH CAROLINA PROFESSIONAL SEAL 043767 ENGINEER ADAM M. CONRAD

$$$$$SYSTIME$$$$$
$$$$$$$$$$$$$$$$$DGN$$$$$$$$$$$$$$$$$$
$$$$USERNAME$$$$

PROJ. REFERENCE NO.	SHEET NO.
17BP.3.R.59	TMP-1A

ROADWAY STANDARD DRAWINGS

THE FOLLOWING ROADWAY STANDARDS AS SHOWN IN "ROADWAY STANDARD DRAWINGS" - PROJECT SERVICES UNIT - N.C. DEPARTMENT OF TRANSPORTATION - RALEIGH, N.C., DATED JANUARY 2018 ARE APPLICABLE TO THIS PROJECT AND BY REFERENCE HEREBY ARE CONSIDERED A PART OF THESE PLANS:

STD. NO.	TITLE
1101.03	TEMPORARY ROAD CLOSURES
1101.11	TRAFFIC CONTROL DESIGN TABLES
1110.01	STATIONARY WORK ZONE SIGNS
1145.01	BARRICADES

LEGEND

GENERAL

- DIRECTION OF TRAFFIC FLOW
- DIRECTION OF PEDESTRIAN TRAFFIC FLOW
- EXIST. PVMT.
- NORTH ARROW
- PROPOSED PVMT.
- TEMP. SHORING (LOCATION PURPOSES ONLY)

SIGNALS

- EXISTING
- PROPOSED
- TEMPORARY

PAVEMENT MARKINGS

- EXISTING LINES
- TEMPORARY LINES

TRAFFIC CONTROL DEVICES

- BARRICADE (TYPE III)
- CONE
- DRUM
- SKINNY DRUM
- TUBULAR MARKER
- TEMPORARY CRASH CUSHION
- FLASHING ARROW BOARD
- FLAGGER
- LAW ENFORCEMENT
- TRUCK MOUNTED ATTENUATOR (TMA)
- CHANGEABLE MESSAGE SIGN

TEMPORARY SIGNING

- PORTABLE SIGN
- STATIONARY SIGN
- STATIONARY OR PORTABLE SIGN

PAVEMENT MARKERS

- CRYSTAL/CRYSTAL
- CRYSTAL/RED
- YELLOW/YELLOW

PAVEMENT MARKING SYMBOLS

- PAVEMENT MARKING SYMBOLS

CDM Smith
CDM Smith Inc.
5400 Glenwood Avenue
Suite 400
Raleigh, NC 27612-3228
NC COA No. F-1255

APPROVED: DocuSigned by: Adam M. Conrad 312C25CC73204E1...

DATE: 5/21/2018 1:12:19 PM PDT

SEAL

NORTH CAROLINA PROFESSIONAL SEAL 043767 ENGINEER ADAM M. CONRAD

DOCUMENT NOT CONSIDERED FINAL UNLESS ALL SIGNATURES COMPLETED

DIVISION OF HIGHWAYS STATE OF NORTH CAROLINA DEPARTMENT OF TRANSPORTATION WORK ZONE TRAFFIC CONTROL

ROADWAY STANDARD DRAWINGS & LEGEND

PROJ. REFERENCE NO.	SHEET NO.
17BP.3.R.59	TMP-1B

MANAGEMENT STRATEGIES

1- CLOSE SR 1905 (W. MCGOWAN ROAD) TO TRAFFIC AND DETOR TRAFFIC OFF-SITE.

2- LOCAL ACCESS TO ALL RESIDENCES AND BUSINESSES WILL BE MAINTAINED BETWEEN CLOSURE POINTS AT ALL TIMES DURING CONSTRUCTION.

GENERAL NOTES

CHANGES MAY BE REQUIRED WHEN PHYSICAL DIMENSIONS IN THE DETAIL DRAWINGS, STANDARD DETAILS, AND ROADWAY DETAILS ARE NOT ATTAINABLE TO MEET FIELD CONDITIONS OR RESULT IN DUPLICATE OR UNDESIRED OVERLAPPING OF DEVICES. MODIFICATION MAY INCLUDE: MOVING, SUPPLEMENTING, COVERING, OR REMOVAL OF DEVICES AS DIRECTED BY THE ENGINEER.

THE FOLLOWING GENERAL NOTES APPLY AT ALL TIMES FOR THE DURATION OF THE CONSTRUCTION PROJECT EXCEPT WHEN OTHERWISE NOTED IN THE PLAN OR DIRECTED BY THE ENGINEER.

TRAFFIC PATTERN ALTERATIONS

A) NOTIFY THE ENGINEER THIRTY (30) CALENDAR DAYS PRIOR TO ANY TRAFFIC PATTERN ALTERATION.

SIGNING

B) INSTALL ADVANCE WORK ZONE WARNING SIGNS WHEN WORK IS WITHIN 40 FT FROM THE EDGE OF TRAVEL LANE AND NO MORE THAN THREE (3) DAYS PRIOR TO THE BEGINNING OF CONSTRUCTION.

C) PROVIDE SIGNING AND DEVICES REQUIRED TO CLOSE THE ROAD ACCORDING TO THE ROADWAY STANDARD DRAWINGS AND TRAFFIC CONTROL PLANS.

PROVIDE SIGNING REQUIRED FOR THE OFF-SITE DETOUR ROUTE AS SHOWN IN THE TRAFFIC CONTROL PLANS.

D) COVER OR REMOVE ALL SIGNS AND DEVICES REQUIRED TO CLOSE THE ROAD WHEN ROAD CLOSURE IS NOT IN OPERATION.

COVER OR REMOVE ALL SIGNS REQUIRED FOR THE OFF-SITE DETOUR WHEN THE DETOUR IS NOT IN OPERATION.

E) ENSURE ALL NECESSARY SIGNING IS IN PLACE PRIOR TO ALTERING ANY TRAFFIC PATTERN.

TRAFFIC CONTROL DEVICES

F) PLACE TYPE III BARRICADES, WITH "ROAD CLOSED" SIGN R11-2 ATTACHED, OF SUFFICIENT LENGTH TO CLOSE ENTIRE ROADWAY.

PHASING

STEP 1: USING RSD 1101.03 (SHEET 1 OF 9), INSTALL DETOUR ROUTE SIGNING TO CLOSE SR 1905 (W. MCGOWAN ROAD) FROM STA. 16+50+/- TO STA. 21+40+/- -L-.

STEP 2: AWAY FROM TRAFFIC, COMPLETE CONSTRUCTION OF PROPOSED BRIDGE AND ROADWAY APPROACHES, INCLUDING DRAINAGE, GUARDRAIL, FINAL PAVEMENT MARKINGS AND MARKERS ON PROPOSED -L- FROM STA. 16+50+/- TO STA. 21+40+/-.

STEP 3: REMOVE TEMPORARY TRAFFIC CONTROL DEVICES AND OPEN -L- TO PROPOSED 2-LANE, 2-WAY TRAFFIC PATTERN.

LOCAL NOTES

1- NOTIFY SAMPSON AND DUPLIN COUNTY EMERGENCY SERVICES AND PUBLIC SCHOOLS AT LEAST ONE MONTH PRIOR TO ROAD CLOSURE.

CDM Smith
CDM Smith Inc.
5400 Glenwood Avenue
Suite 400
Raleigh, NC 27612-3228
NC COA No. F-1255

APPROVED: DocuSigned by: Adam M. Conrad 312C25CC73204E1...
DATE: 5/21/2018 1:12:19 PM PDT
SEAL

NORTH CAROLINA PROFESSIONAL SEAL 043767 ENGINEER ADAM M. CONRAD

DOCUMENT NOT CONSIDERED FINAL UNLESS ALL SIGNATURES COMPLETED

DIVISION OF HIGHWAYS STATE OF NORTH CAROLINA DEPARTMENT OF TRANSPORTATION WORK ZONE TRAFFIC CONTROL

TRANSPORTATION OPERATIONS PLAN

PROJ. REFERENCE NO.	SHEET NO.
17BP.3.R.59	TMP-2

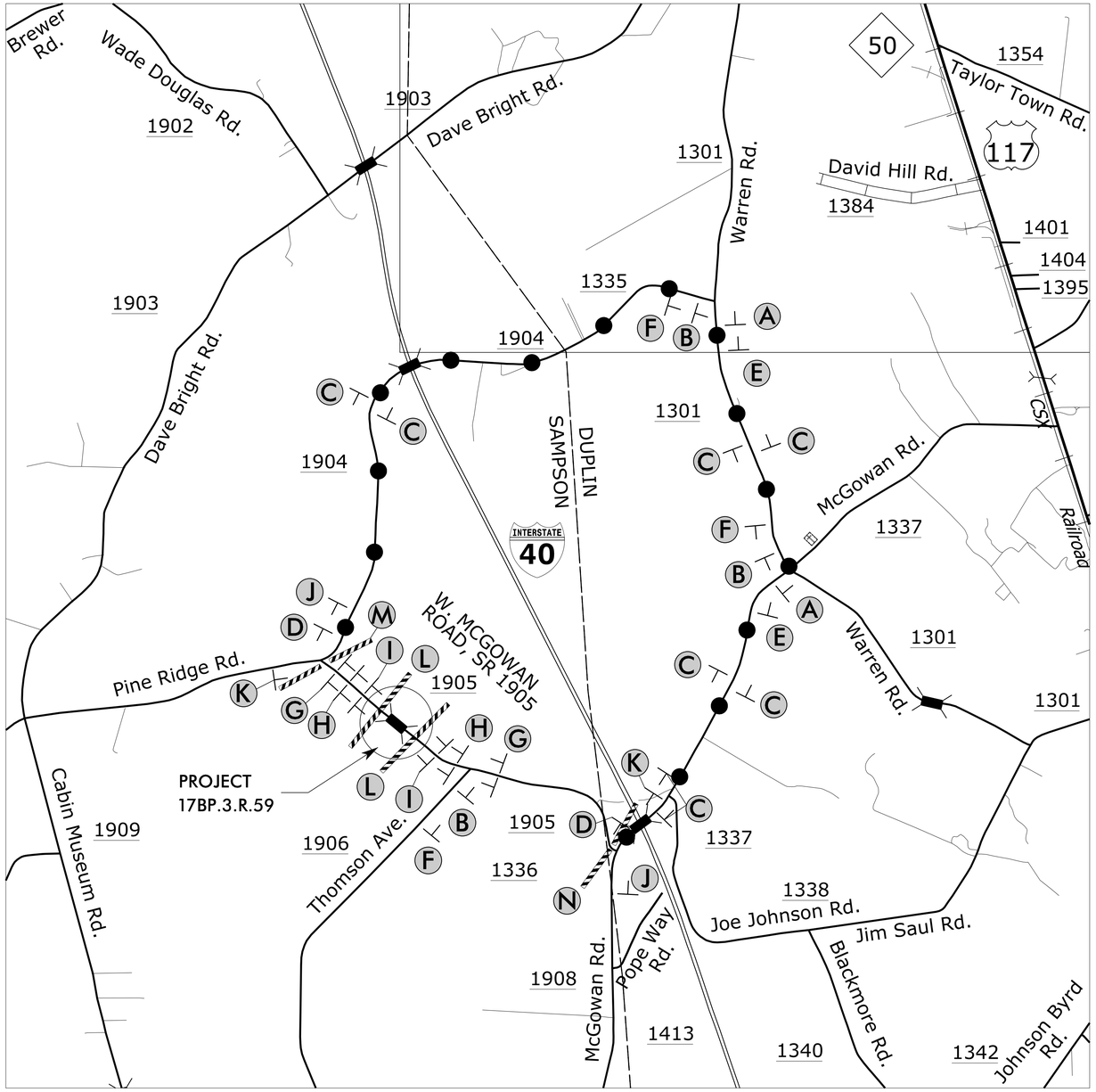

OFF-SITE DETOUR ROUTE

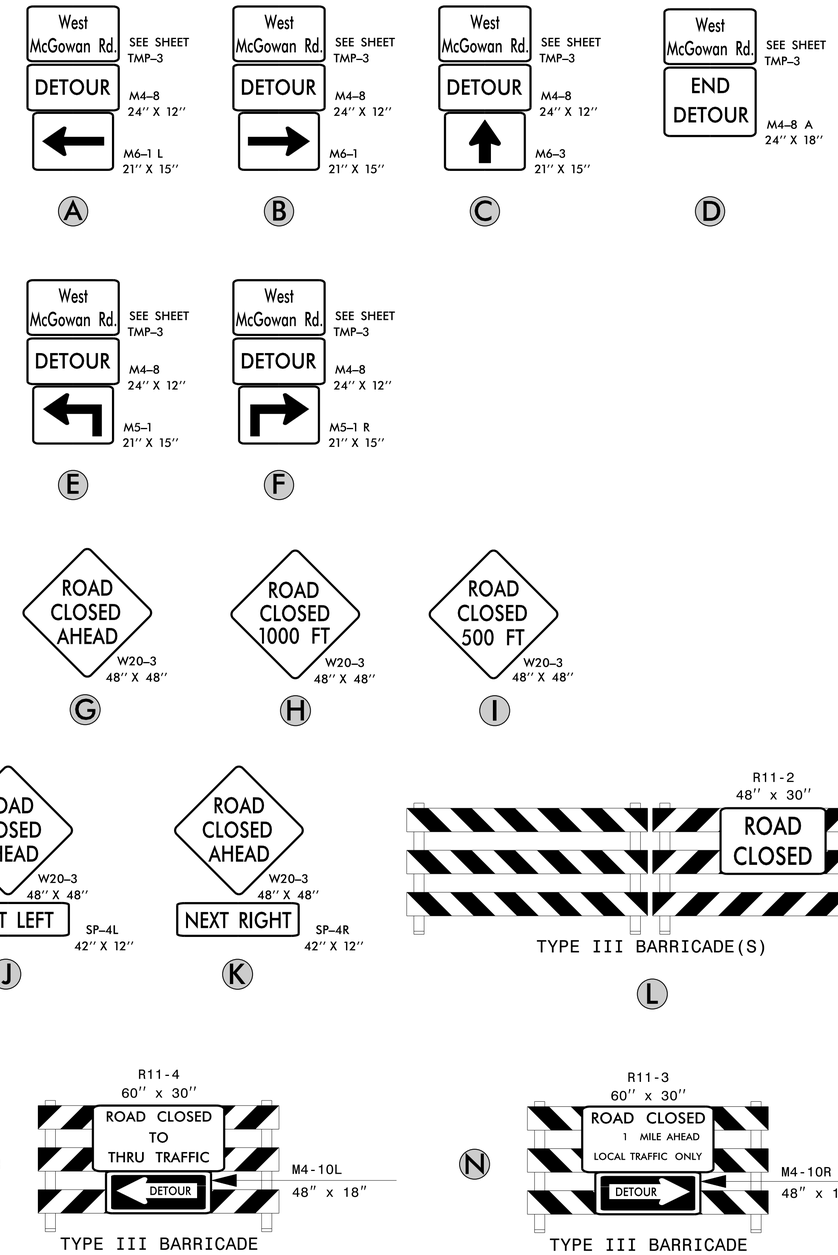

CDM Smith
CDM Smith Inc.
5400 Glenwood Avenue
Suite 400
Raleigh, NC 27612-3228
NC COA No. F-1255

APPROVED: DocuSigned by: Adam M. Conrad 312C25CC73204E1...
DATE: 5/21/2018 1:12:19 PM PDT
SEAL

NORTH CAROLINA PROFESSIONAL SEAL 043767 ENGINEER ADAM M. CONRAD

DIVISION OF HIGHWAYS STATE OF NORTH CAROLINA DEPARTMENT OF TRANSPORTATION WORK ZONE TRAFFIC CONTROL

DOCUMENT NOT CONSIDERED FINAL UNLESS ALL SIGNATURES COMPLETED

OFF–SITE DETOUR

PROJ. REFERENCE NO.	SHEET NO.
17BP.3.R.59	TMP-3

SIGN NUMBER: 1
TYPE: STATIONARY
QUANTITY: SEE PLANS

BACKG COLOR: Orange
COPY COLOR: Black

SYMBOL	X	Y	WID	HT

SIGN WIDTH: 3′-6″
HEIGHT: 1′-6″
TOTAL AREA: 5.3 Sq.Ft.

BORDER TYPE: FLUSH
RECESS: 0.38″
WIDTH: 0.5″
RADII: 1.5″

NO. Z BARS:
LENGTH:

MAT′L: 0.063″ (1.6 mm) ALUMINUM

DESIGN BY: AMC
CHECKED BY: KAP
Jan 19, 2018
PROJECT ID: 17BP.3.R.59
LOCATION: SAMPSON
DIV: 3

USE NOTES:

1. Legend and border(except those that are colored black) shall be direct applied Grade B sheeting.
2. Background shall be Grade B reflective sheeting.
3. Shields; A, B, and C type arrows shall be on 0.032″ (0.8mm) aluminum and demountable.
4. Bottom panel shall be yellow Grade C sheeting. Legend shall be direct applied black non-reflective sheeting. Yellow panel is:

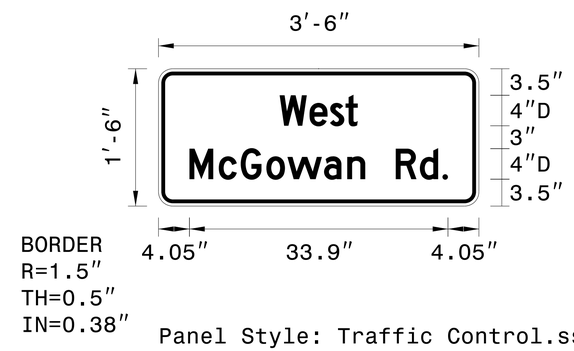

Panel Style: Traffic Control.ssi
M.U.T.C.D.: 2009 Edition

Spacing Factor is 1 unless specified otherwise

LETTER POSITIONS

Letter locations are panel edge to lower left corner

																										Series/Size Text Length
W	e	s	t																							D 2000
15.9	19.8	22.5	24.5																							10.2
M	c	G	o	w	a	n		R	d	.																D 2000
4.1	7.9	10.8	14.1	16.9	21.7	24.7	27.1	31.1	34.3	37.2																33.9

FILENAME: 17BP.3.R.59_TMP_TC03

NORTH CAROLINA D.O.T. SIGN DETAIL

CDM Smith
CDM Smith Inc.
5400 Glenwood Avenue
Suite 400
Raleigh, NC 27612-3228
NC COA No. F-1255

APPROVED: DocuSigned by: Adam M. Conrad 312C25CC7320 4E1...
DATE: 5/21/2018 1:12:19 PM PDT
SEAL

NORTH CAROLINA PROFESSIONAL SEAL 043767 ENGINEER ADAM M. CONRAD

DOCUMENT NOT CONSIDERED FINAL UNLESS ALL SIGNATURES COMPLETED

DIVISION OF HIGHWAYS · STATE OF NORTH CAROLINA · DEPARTMENT OF TRANSPORTATION · WORK ZONE TRAFFIC CONTROL

SIGN DESIGN

T.I.P.: 17BP.3.R.59

TIP NO.	SHEET NO.
17BP.3.R.59	PMP-1

APPROVED: DocuSigned by: Adam M. Conrad 312C25CC73204E1...
DATE: 5/21/2018 1:12:19 PM PDT

SEAL

NORTH CAROLINA PROFESSIONAL SEAL 043767 ENGINEER ADAM M. CONRAD

DOCUMENT NOT CONSIDERED FINAL UNLESS ALL SIGNATURES COMPLETED

CDM Smith
CDM Smith Inc.
5400 Glenwood Avenue
Suite 400
Raleigh, NC 27612-3228
NC COA No. F-1255

STATE OF NORTH CAROLINA
DEPARTMENT OF TRANSPORTATION

PAVEMENT MARKING PLAN
SAMPSON COUNTY
LOCATION: SR 1905 (W. MCGOWAN ROAD) AT TEN MILE SWAMP

ROADWAY STANDARD DRAWING

THE FOLLOWING ROADWAY STANDARDS AS APPEAR IN "ROADWAY STANDARD DRAWINGS" - PROJECT SERVICES UNIT - N.C. DEPARTMENT OF TRANSPORTATION - RALEIGH, N.C., DATED JANUARY 2018 ARE APPLICABLE TO THIS PROJECT AND BY REFERENCE HEREBY ARE CONSIDERED A PART OF THESE PLANS:

STD. NO.	TITLE
1205.01	PAVEMENT MARKINGS - LINE TYPES AND OFFSETS
1205.02	PAVEMENT MARKINGS - TWO-LANE AND MULTILANE ROADWAYS
1205.12	PAVEMENT MARKINGS - BRIDGES
1250.01	RAISED PAVEMENT MARKERS - INSTALLATION SPACING
1251.01	RAISED PAVEMENT MARKERS - PERMANENT AND TEMPORARY
1261.01	GUARDRAIL AND BARRIER DELINEATORS - INSTALLATION SPACING
1261.02	GUARDRAIL AND BARRIER DELINEATORS - TYPES AND MOUNTING
1262.01	GUARDRAIL END DELINEATION

GENERAL NOTES

THE FOLLOWING GENERAL NOTES APPLY AT ALL TIMES FOR THE DURATION OF THE CONSTRUCTION PROJECT, EXCEPT WHEN OTHERWISE NOTED IN THE PLAN, OR DIRECTED BY THE ENGINEER.

A) INSTALL PAVEMENT MARKINGS AND PAVEMENT MARKERS ON THE FINAL SURFACE AS FOLLOWS:

ROAD NAME	MARKING	MARKER
W. MCGOWAN ROAD	PAINT	PERMANENT RAISED

B) PLACE TWO APPLICATIONS OF PAINT PAVEMENT MARKINGS ON THE FINAL WEARING SURFACE. PLACE THE SECOND APPLICATION OF PAINT UPON SUFFICIENT DRYING TIME OF THE FIRST.

C) TIE PROPOSED PAVEMENT MARKING LINES TO EXISTING PAVEMENT MARKING LINES.

D) REMOVE/REPLACE ANY CONFLICTING/DAMAGED PAVEMENT MARKINGS AND MARKERS.

E) MARKERS SHALL BE INSTALLED ACCORDING TO THE NCDOT ROADWAY STANDARD DRAWING 1250.01.

SUMMARY OF QUANTITIES

ITEM NO. DESC. NO.	ITEM NO. SECT. NO.	ITEM DESCRIPTION	QUANTITY	UNIT
4810000000	1205	PAINT PAVEMENT MARKING LINES (4")	3,920	L.F.
4900000000	1251	PERMANENT RAISED PAVEMENT MARKERS	10	EA.

INDEX

PLAN PREPARED BY: CDM SMITH, INC.

DAVID Z. KEISER, P. E. PROJECT MANAGER
ADAM M. CONRAD, P. E. PROJECT DESIGN ENGINEER

CDM Smith
CDM Smith Inc.
5400 Glenwood Avenue
Suite 400
Raleigh, NC 27612-3228
NC COA No. F-1255

PLAN REVIEWED BY: N.C.D.O.T. DIVISION 3

JESSI LEONARD, P.E. DIVISION TRAFFIC ENGINEER
KEVIN G. BOWEN, P.E. DIVISION CONSTRUCTION ENGINEER

STATE OF NORTH CAROLINA DEPARTMENT OF TRANSPORTATION

$$$$SYTIME$$$$
$$$$$$$$$$$$$$$$

TIP NO.	SHEET NO.
17BP.3.R.59	PMP-2

APPROVED: DocuSigned by: Adam M. Conrad 312C25CC73204E1...

DATE: 5/21/2018 1:12:19 PM PDT

SEAL

NORTH CAROLINA PROFESSIONAL SEAL 043767 ENGINEER ADAM M. CONRAD

DOCUMENT NOT CONSIDERED FINAL UNLESS ALL SIGNATURES COMPLETED

CDM Smith
CDM Smith Inc.
5400 Glenwood Avenue
Suite 400
Raleigh, NC 27612-3228
NC COA No. F-1255

PAVEMENT MARKING SCHEDULE

SYMBOL	DESCRIPTION
PAINT(4")	
PA	WHITE EDGELINE
PI	YELLOW DOUBLE CENTER
PERMANENT RAISED PAVEMENT MARKERS	
MA	YELLOW & YELLOW

15 20 25

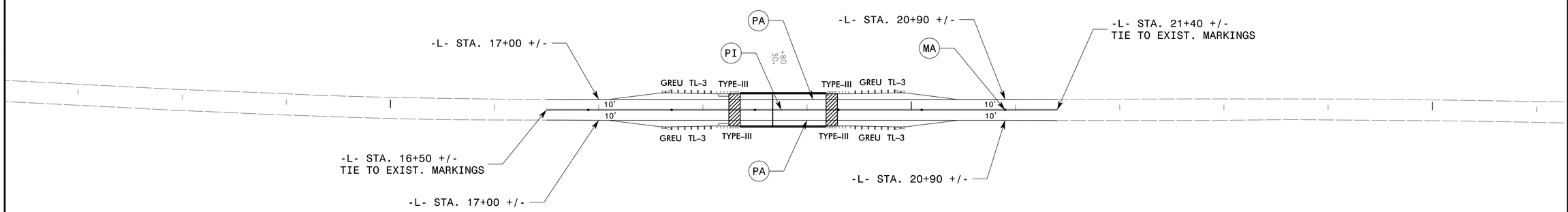

PAVEMENT MARKING DETAIL

5/15/2018
pw:\\pwxcdmsmith.com:PW_PLI\Documents\117240\219637\10 Transportation\04 Client Folder Structure\17BP.3.R.59\Traffic\Signing\CADD\17BP.3.R.59_TMP_PM02.dgn
User:DAN100

TIP PROJECT: 17BP.3.R.59

STATE	STATE PROJECT REFERENCE NO.	SHEET NO.	TOTAL SHEETS
N.C.	17BP.3.R.59	EC-1	

STATE PROJ. NO.	F. A. PROJ. NO.	DESCRIPTION

STATE OF NORTH CAROLINA
DIVISION OF HIGHWAYS

PLAN FOR PROPOSED
HIGHWAY EROSION CONTROL

SAMPSON COUNTY

LOCATION: REPLACE BRIDGE 252 OVER TEN MILE SWAMP ON SR 1905 (W. MCGOWAN ROAD)

TYPE OF WORK: GRADING, DRAINAGE, PAVING, AND STRUCTURE

NC GRID NAD 83 NA 2011

TO PINE RIDGE ROAD

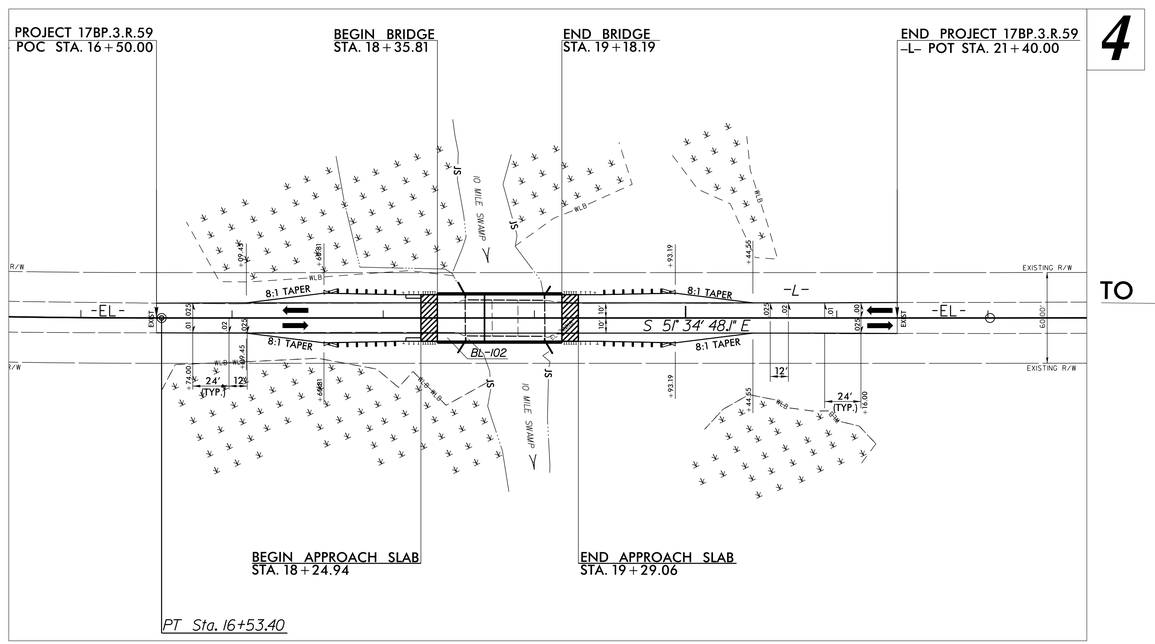

EROSION AND SEDIMENT CONTROL MEASURES

NCDOT Std.#	Description	Symbol
1630.03	Temporary Silt Ditch	TSD
1630.05	Temporary Diversion	TD
1605.01	Temporary Silt Fence	
1606.01	Special Sediment Control Fence	
1622.01	Temporary Berms and Slope Drains	
1630.02	Silt Basin Type B	
1633.01	Temporary Rock Silt Check Type-A	
	Temporary Rock Silt Check Type-A with Matting and Polyacrylamide (PAM)	
1633.02	Temporary Rock Silt Check Type-B	
	Wattle/ Coir Fiber Wattle	EW CFW
	Wattle/ Coir Fiber Wattle with Polyacrylamide (PAM)	
1634.01	Temporary Rock Sediment Dam Type-A	
1634.02	Temporary Rock Sediment Dam Type-B	
1635.01	Rock Pipe Inlet Sediment Trap Type-A	
1635.02	Rock Pipe Inlet Sediment Trap Type-B	
1630.04	Stilling Basin	
1630.06	Special Stilling Basin	
	Rock Inlet Sediment Trap:	
1632.01	Type A	A
1632.02	Type B	B
1632.03	Type C	C
	Skimmer Basin	
	Tiered Skimmer Basin	
	Infiltration Basin	

THIS PROJECT CONTAINS EROSION CONTROL PLANS FOR CLEARING AND GRUBBING PHASE OF CONSTRUCTION.

GRAPHIC SCALE

50 25 0 50 100
PLANS

50 25 0 50 100
PROFILE (HORIZONTAL)

10 5 0 10 20
PROFILE (VERTICAL)

THESE EROSION AND SEDIMENT CONTROL PLANS COMPLY WITH THE REGULATIONS SET FORTH BY THE NCG-010000 GENERAL CONSTRUCTION PERMIT EFFECTIVE AUGUST 1, 2016 AND ISSUED BY THE NORTH CAROLINA DEPARTMENT OF ENVIRONMENTAL QUALITY DIVISION OF WATER RESOURCES.

Prepared in the Office of:

SUMMIT DESIGN AND ENGINEERING SERVICES FIRM NO. P-0339
504 Meadowland Drive
Hillsborough, NC 27278-8551
Voice: (919) 732-3883
Fax: (919) 732-6776
www.summitde.net

Designed by:

DAN DUFFIELD, PE — ***3481***

NAME — *LEVEL III CERTIFICATION NO.*

Reviewed in the Office of:

ROADSIDE ENVIRONMENTAL UNIT

1 South Wilmington St.
Raleigh, NC 27611

2018 STANDARD SPECIFICATIONS

Reviewed by:

NOELLE RING, CPESC

Roadway Standard Drawings

The following roadway english standards as appear in "Roadway Standard Drawings"– Roadway Design Unit – N. C. Department of Transportation – Raleigh, N. C., dated January 2018 and the latest revison thereto are applicable to this project and by reference hereby are considered a part of these plans.

1604.01	Railroad Erosion Control Detail	1632.01	Rock Inlet Sediment Trap Type A
1605.01	Temporary Silt Fence	1632.02	Rock Inlet Sediment Trap Type B
1606.01	Special Sediment Control Fence	1632.03	Rock Inlet Sediment Trap Type C
1607.01	Gravel Construction Entrance	1633.01	Temporary Rock Silt Check Type A
1622.01	Temporary Berms and Slope Drains	1633.02	Temporary Rock Silt Check Type B
1630.01	Riser Basin	1634.01	Temporary Rock Sediment Dam Type A
1630.02	Silt Basin Type B	1634.02	Temporary Rock Sediment Dam Type B
1630.03	Temporary Silt Ditch	1635.01	Rock Pipe Inlet Sediment Trap Type A
1630.04	Stilling Basin	1635.02	Rock Pipe Inlet Sediment Trap Type B
1630.05	Temporary Diversion	1640.01	Coir Fiber Baffle
1630.06	Special Stilling Basin	1645.01	Temporary Stream Crossing
1631.01	Matting Installation		

15-MAY-2018 13:33
s:\hydro\projects\8102452_EC_dsn_sph.dgn
dduffield

PROJECT REFERENCE NO.	SHEET NO.
17BP.3.R.59	EC-2
R/W SHEET NO.	____
ROADWAY DESIGN ENGINEER	HYDRAULICS ENGINEER

SILT FENCE COIR FIBER WATTLE BREAK DETAIL

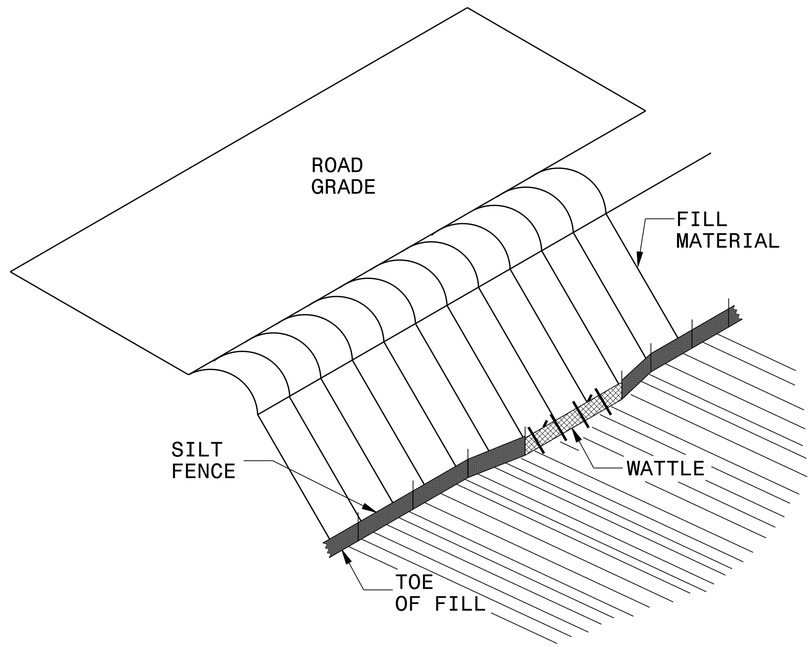

ISOMETRIC VIEW

NOTES:

USE MINIMUM 12 IN. DIAMETER EXCELSIOR WATTLE AND LENGTH OF 10 FT.

EXCAVATE A 1 TO 2 INCH TRENCH FOR WATTLE TO BE PLACED.

DO NOT PLACE WATTLE ON TOE OF SLOPE.

USE 2 FT. WOODEN STAKES WITH A 2 IN. BY 2 IN. NOMINAL CROSS SECTION.

INSTALL A MINIMUM OF 2 UPSLOPE STAKES AND 4 DOWNSLOPE STAKES AT AN ANGLE TO WEDGE WATTLE TO GROUND.

PROVIDE STAPLES MADE OF 0.125 IN. DIAMETER STEEL WIRE FORMED INTO A U SHAPE NOT LESS THAN 12″ IN LENGTH.

INSTALL STAPLES APPROXIMATELY EVERY 1 LINEAR FOOT ON BOTH SIDES OF WATTLE AND AT EACH END TO SECURE IT TO THE SOIL.

WATTLE INSTALLATION CAN BE ON OUTSIDE OF THE SILT FENCE AS DIRECTED.

INSTALL TEMPORARY SILT FENCE IN ACCORDANCE WITH SECTION 1605 OF THE STANDARD SPECIFICATIONS.

INSET A

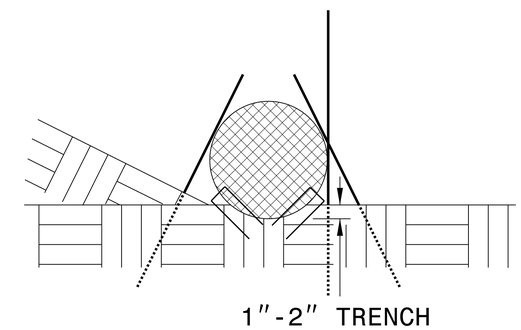

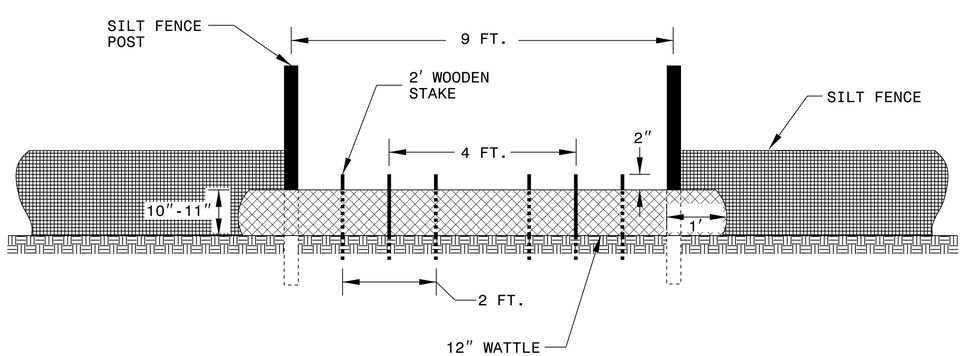

VIEW FROM SLOPE

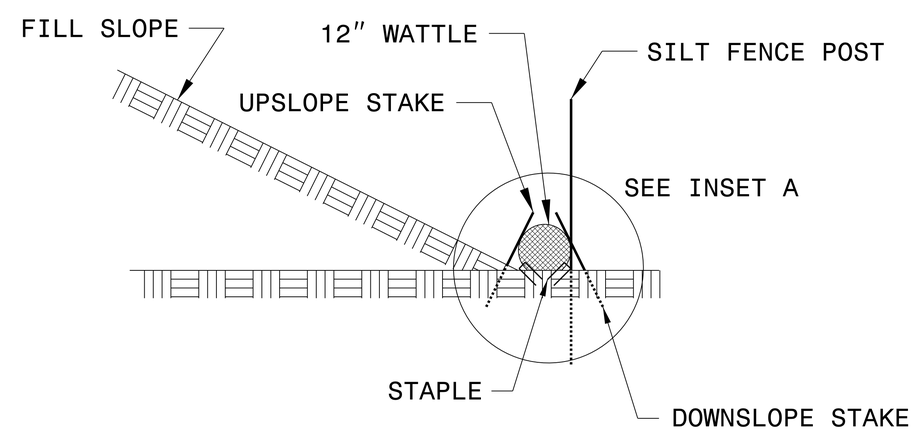

SIDE VIEW

PROJECT REFERENCE NO.	SHEET NO.
17BP.3.R.59	EC-2A
R/W SHEET NO.	____
ROADWAY DESIGN ENGINEER	HYDRAULICS ENGINEER

COIR FIBER WATTLE DETAIL

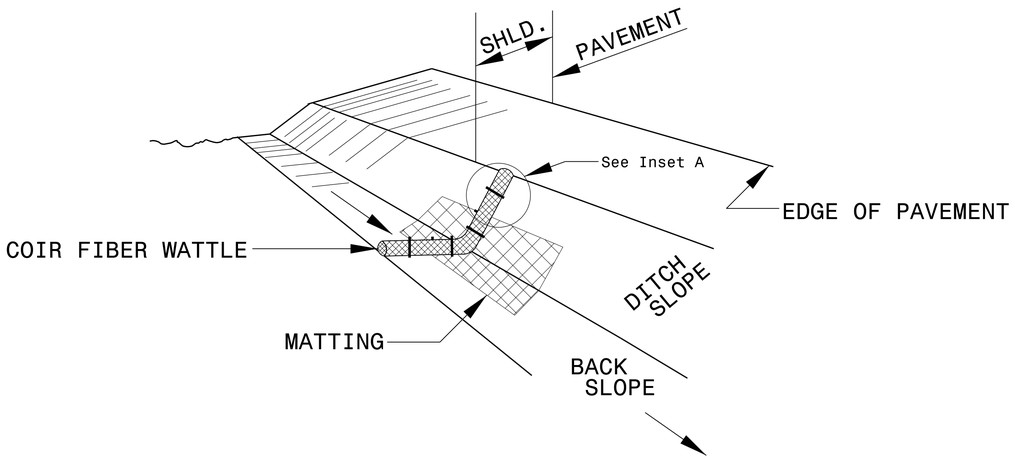

ISOMETRIC VIEW

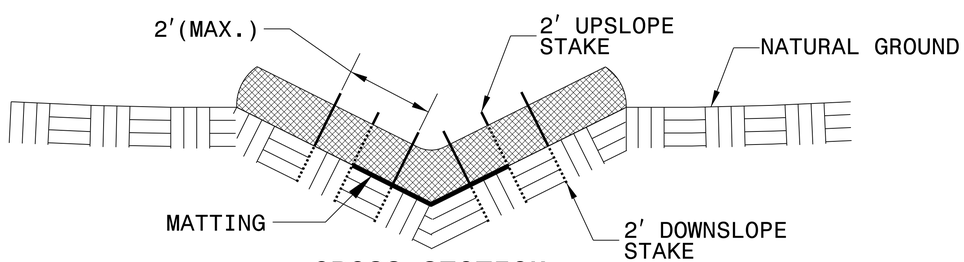

CROSS SECTION VEE DITCH

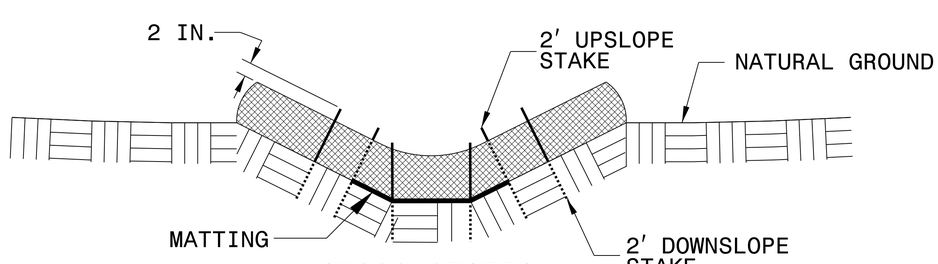

CROSS SECTION TRAPEZOIDAL DITCH

NOTES:

USE MINIMUM 12 IN. DIAMETER COIR FIBER (COCONUT FIBER) WATTLE.

USE 2 FT. WOODEN STAKES WITH A 2 IN. BY 2 IN. NOMINAL CROSS SECTION.

ONLY INSTALL WATTLE(S) TO A HEIGHT IN DITCH SO FLOW WILL NOT WASH AROUND WATTLE AND SCOUR DITCH SLOPES AND AS DIRECTED.

INSTALL A MINIMUM OF 2 UPSLOPE STAKES AND 4 DOWNSLOPE STAKES AT AN ANGLE TO WEDGE WATTLE TO BOTTOM OF DITCH.

PROVIDE STAPLES MADE OF 0.125 IN. DIAMETER STEEL WIRE FORMED INTO A U SHAPE NOT LESS THAN 12″ IN LENGTH.

INSTALL STAPLES APPROXIMATELY EVERY 1 LINEAR FOOT ON BOTH SIDES OF WATTLE AND AT EACH END TO SECURE IT TO THE SOIL.

INSTALL MATTING IN ACCORDANCE WITH SECTION 1631 OF THE STANDARD SPECIFICATIONS.

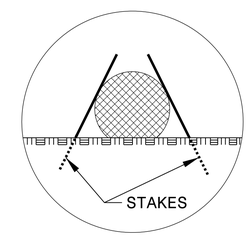

INSET A

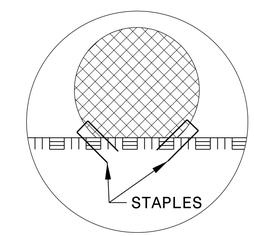

INSET B

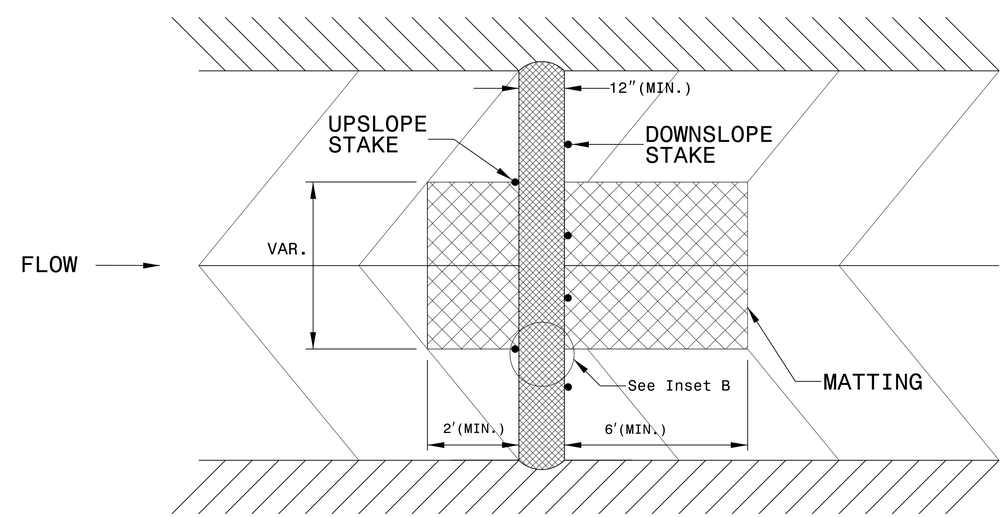

TOP VIEW

PROJECT REFERENCE NO.	SHEET NO.
17BP.3.R.59	EC-3
ROADWAY DESIGN ENGINEER	HYDRAULICS ENGINEER

DIVISION OF HIGHWAYS
STATE OF NORTH CAROLINA

SOIL STABILIZATION TIMEFRAMES

SITE DESCRIPTION	STABILIZATION TIME	TIMEFRAME EXCEPTIONS
PERIMETER DIKES, SWALES, DITCHES AND SLOPES	7 DAYS	NONE
HIGH QUALITY WATER (HQW) ZONES	7 DAYS	NONE
SLOPES STEEPER THAN 3:1	7 DAYS	IF SLOPES ARE 10' OR LESS IN LENGTH AND ARE NOT STEEPER THAN 2:1, 14 DAYS ARE ALLOWED.
SLOPES 3:1 OR FLATTER	14 DAYS	7 DAYS FOR SLOPES GREATER THAN 50' IN LENGTH.
ALL OTHER AREAS WITH SLOPES FLATTER THAN 4:1	14 DAYS	NONE, EXCEPT FOR PERIMETERS AND HQW ZONES.

PROJECT REFERENCE NO.	SHEET NO.
17BP.3.R.59	EC-4
R/W SHEET NO.	
ROADWAY DESIGN ENGINEER	HYDRAULICS ENGINEER

CDM Smith
CDM Smith Inc.
5400 Glenwood Avenue
Suite 400
Raleigh, NC 27612-3228
NC CDA No. F-1255

SUMMIT
Summit Design and Engineering Services
504 Meadowland Drive
Hillsborough, NC 27278
NC FIRM LICENSE No: P-0339

NOTE:
PERIMETER EROSION CONTROL MEASURES SHALL BE INSTALLED DURING CLEARING AND GRUBBING PHASE.

NOTE:
PLACE TEMPORARY ROCK SEDIMENT DAMS TYPE – B AND TEMPORARY ROCK SILT CHECKS TYPE – A AT DRAINAGE OUTLETS.

CLEARING AND GRUBBING
EROSION CONTROL FOR
CONSTRUCTION SHEET 4

NOTE:
UTILIZE TEMPORARY SEDIMENT BASIN OR SPECIAL STILLING BASIN(S) AS STILLING BASIN WHERE APPLICABLE.

PI Sta 14+97.44	PI Sta 24+85.49
Δ = 2° 46' 32.2" (LT)	Δ = 1° 00' 53.8" (RT)
D = 0° 53' 22.9"	D = 0° 40' 58.5"
L = 311.98'	L = 148.62'
T = 156.02'	T = 74.31'
R = 6,440.00'	R = 8,390.00'
E = NC	E = NC
RUNOFF = N/A	RUNOFF = N/A
DS = 60 MPH	DS = 60 MPH

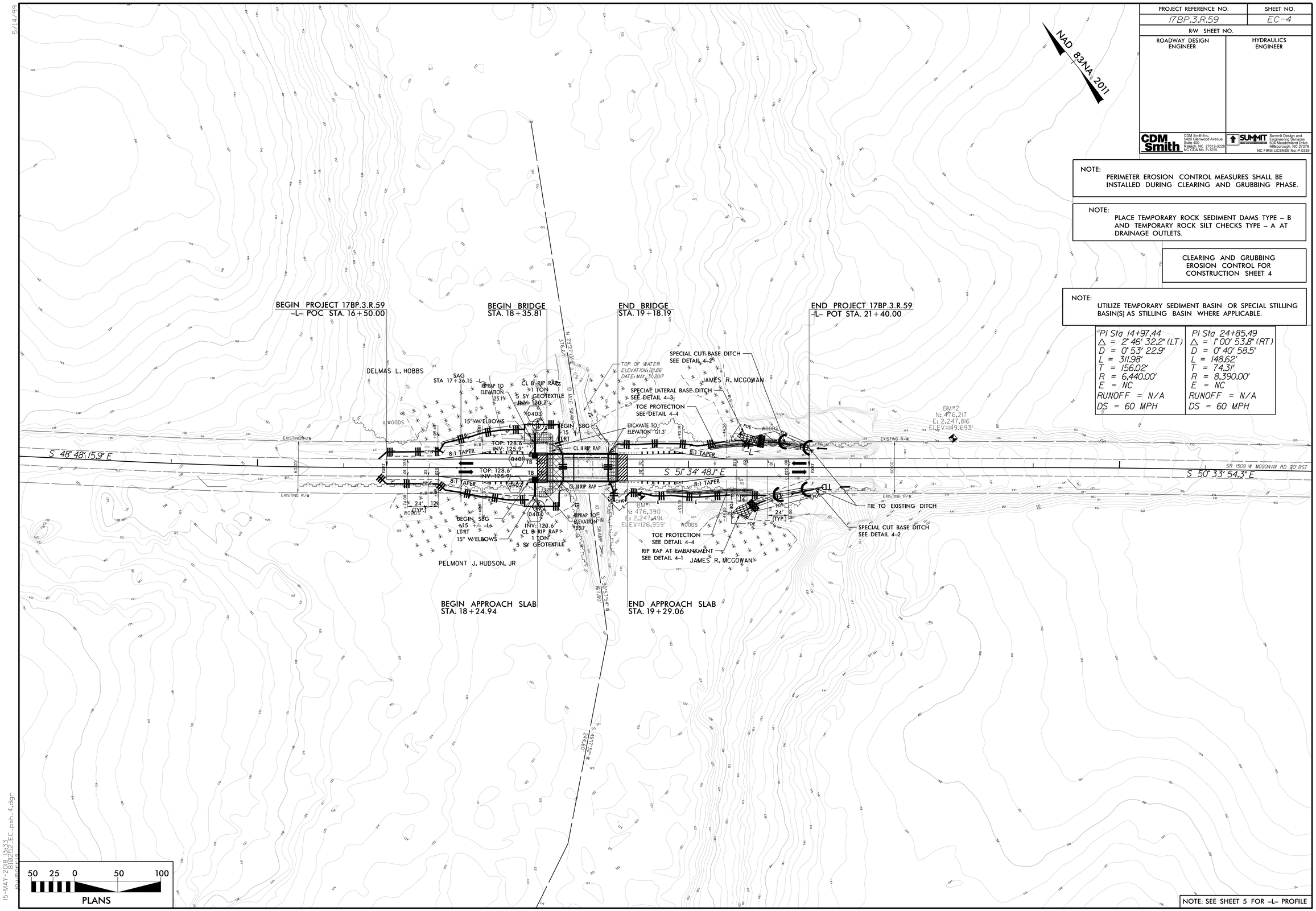

NOTE: SEE SHEET 5 FOR -L- PROFILE

5/14/99

15-MAY-2018 13:33
jowmorris
17BP.3.R.59_EC_psh_4.dgn

PROJECT REFERENCE NO.	SHEET NO.
17BP.3.R.59	EC-5
R/W SHEET NO.	
ROADWAY DESIGN ENGINEER	HYDRAULICS ENGINEER

CDM Smith — CDM Smith Inc, 5400 Glenwood Avenue Suite 400, Raleigh, NC 27612-3228, NC CDA No. F-1255

SUMMIT — Summit Design and Engineering Services, 504 Meadowland Drive, Hillsborough, NC 27278, NC FIRM LICENSE No: P-0339

NOTE:
UTILIZE TEMPORARY SEDIMENT BASIN OR SPECIAL STILLING BASIN(S) AS STILLING BASIN WHERE APPLICABLE.

NAD 83/NA 2011

Place Matting for Erosion Control on Slopes Adjacent to Permitted Wetlands as Work Allows.

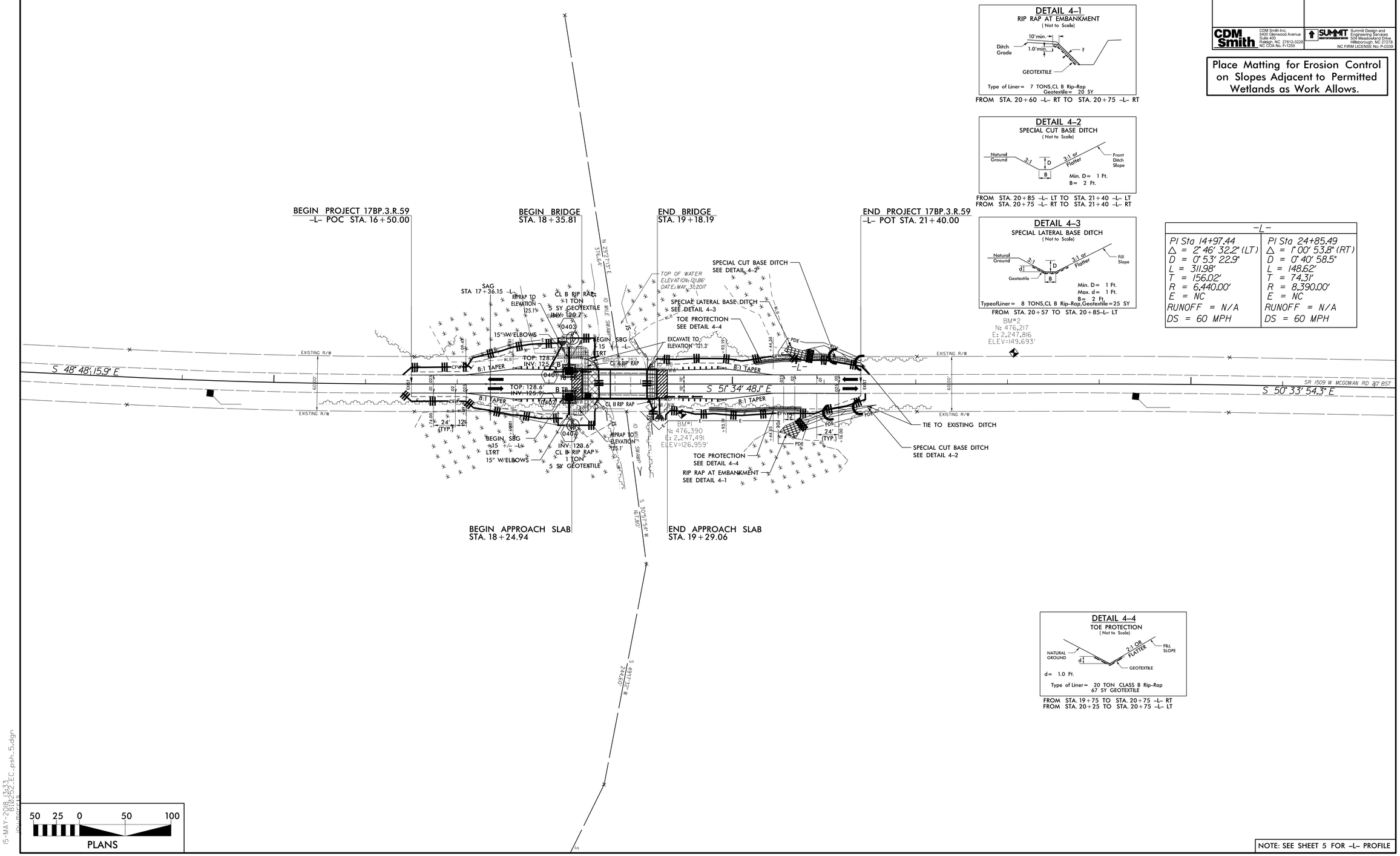

DETAIL 4-1
RIP RAP AT EMBANKMENT
(Not to Scale)

Type of Liner = 7 TONS,CL B Rip-Rap
Geotextile = 20 SY

FROM STA. 20+60 -L- RT TO STA. 20+75 -L- RT

DETAIL 4-2
SPECIAL CUT BASE DITCH
(Not to Scale)

Min. D = 1 Ft.
B = 2 Ft.

FROM STA. 20+85 -L- LT TO STA. 21+40 -L- LT
FROM STA. 20+75 -L- RT TO STA. 21+40 -L- RT

DETAIL 4-3
SPECIAL LATERAL BASE DITCH
(Not to Scale)

Min. D = 1 Ft.
Max. d = 1 Ft.
B = 2 Ft.

TypeofLiner = 8 TONS,CL B Rip-Rap,Geotextile = 25 SY

FROM STA. 20+57 TO STA. 20+85-L- LT

-L-	
PI Sta 14+97.44	PI Sta 24+85.49
△ = 2° 46' 32.2" (LT)	△ = 1° 00' 53.8" (RT)
D = 0° 53' 22.9"	D = 0° 40' 58.5"
L = 311.98'	L = 148.62'
T = 156.02'	T = 74.31'
R = 6,440.00'	R = 8,390.00'
E = NC	E = NC
RUNOFF = N/A	RUNOFF = N/A
DS = 60 MPH	DS = 60 MPH

DETAIL 4-4
TOE PROTECTION
(Not to Scale)

d = 1.0 Ft.

Type of Liner = 20 TON CLASS B Rip-Rap
67 SY GEOTEXTILE

FROM STA. 19+75 TO STA. 20+75 -L- RT
FROM STA. 20+25 TO STA. 20+75 -L- LT

NOTE: SEE SHEET 5 FOR -L- PROFILE

5/14/99

15-MAY-2018 13:33
jowilliams
17BP.3.R.59_EC_psh_5.dgn

CROSS SECTION SHEET INDEX

Note: "Quantities are approximate only. The Resident Engineer will re–cross–section the work accurately when the project is staked out. These cross–section notes will be used in computing the final quantities for which the contractor will be paid."

8/23/99

0 2.5 5	PROJ. REFERENCE NO.	SHEET NO.
	17BP.3.R.59	X-2

Note: Approximate quantities only. Unclassified Excavation, Borrow Excavation, Fine Grading, Clearing and Grubbing, and Removal of Existing Pavement will be paid for at the contract lump sum price for "Grading."

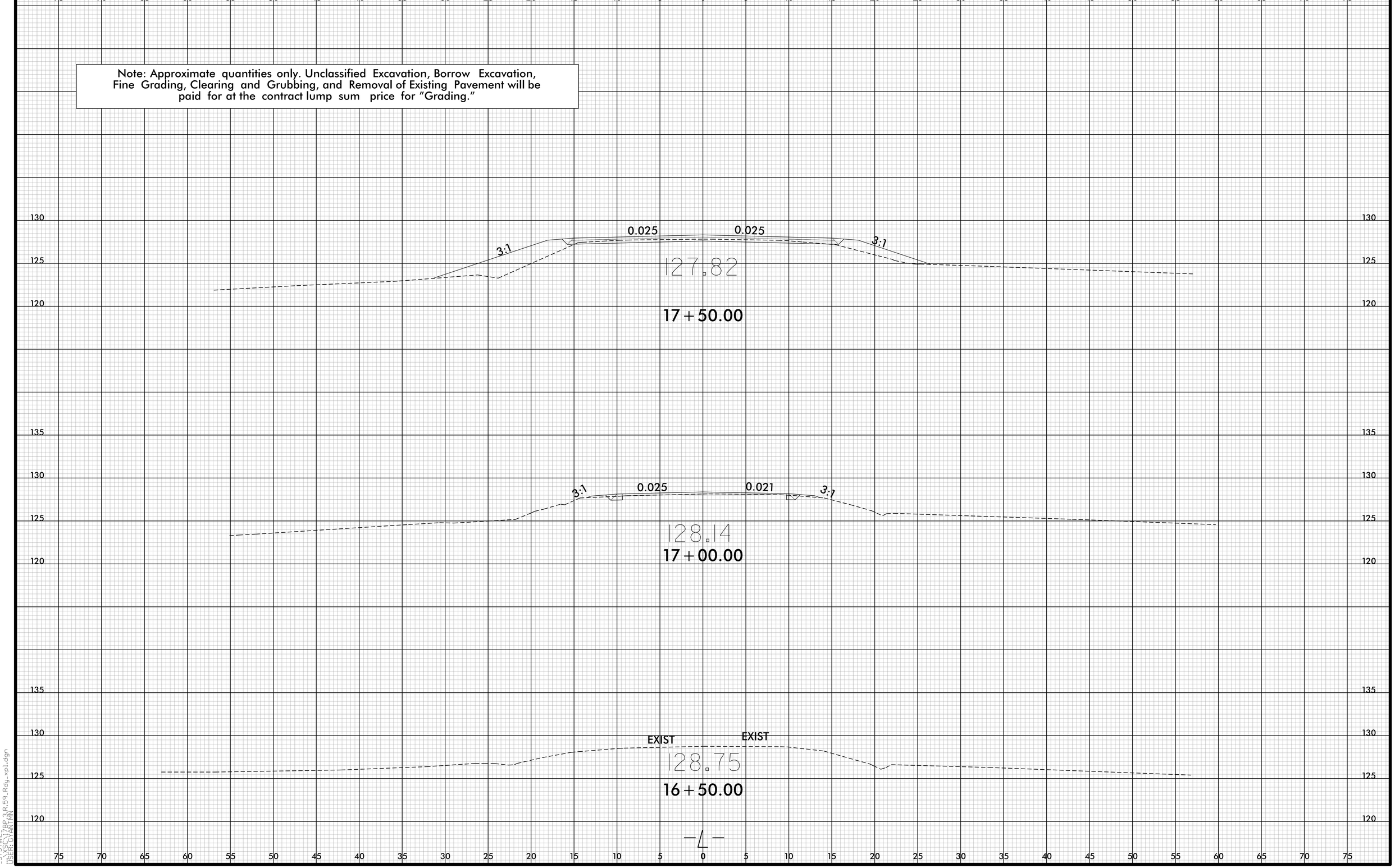

SYSTIME = 17BP.3.R.59_Rdy_xpl.dgn
USER: GYARTMN

0 2.5 5	PROJ. REFERENCE NO.	SHEET NO.
	17BP.3.R.59	X-3

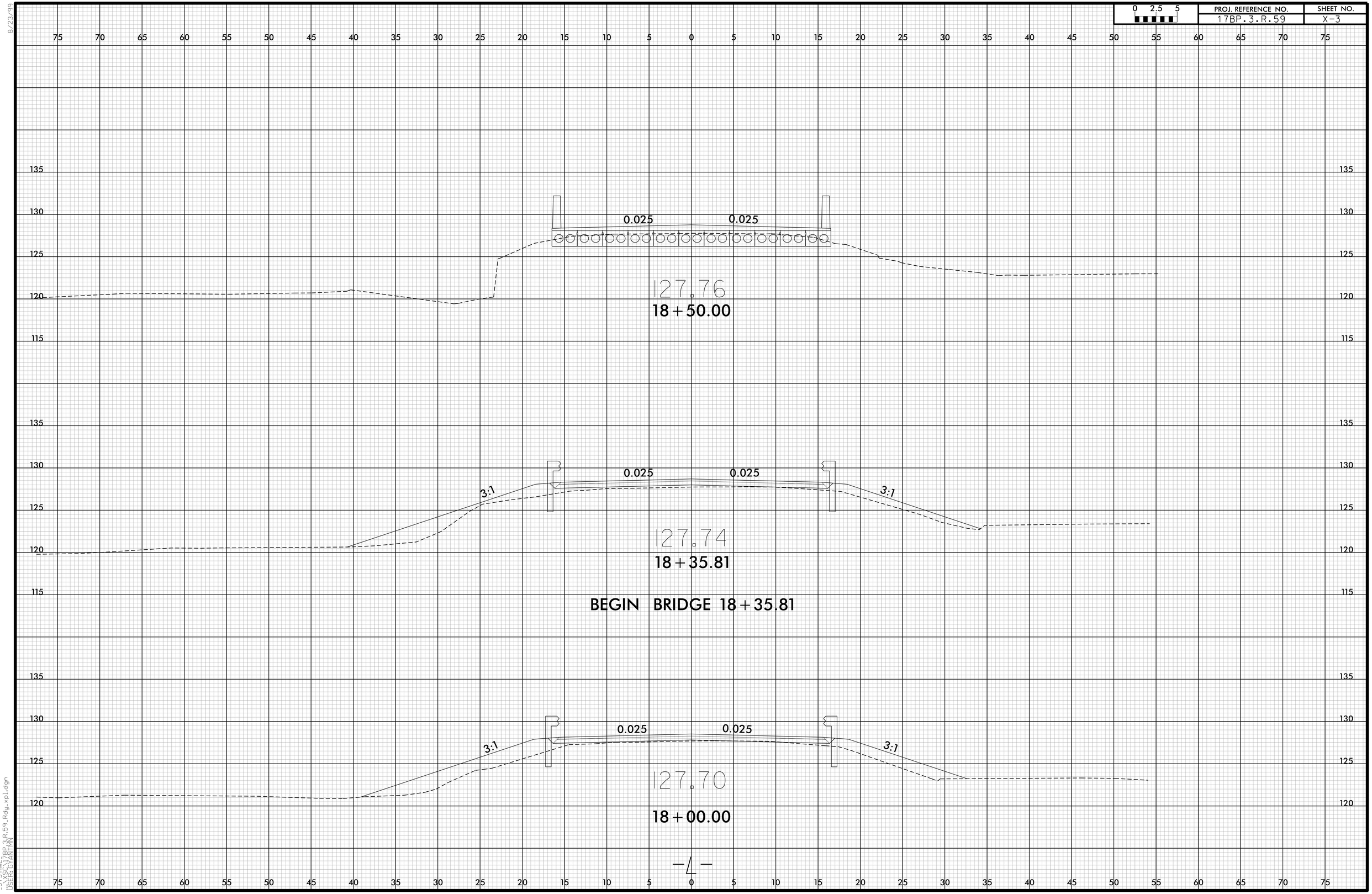

8/23/99

SYSTIME = 17BP.3.R.59_Rdy_xpl.dgn
USER: CYARTAN

8/23/99

0 2.5 5	PROJ. REFERENCE NO.	SHEET NO.
	17BP.3.R.59	X-4

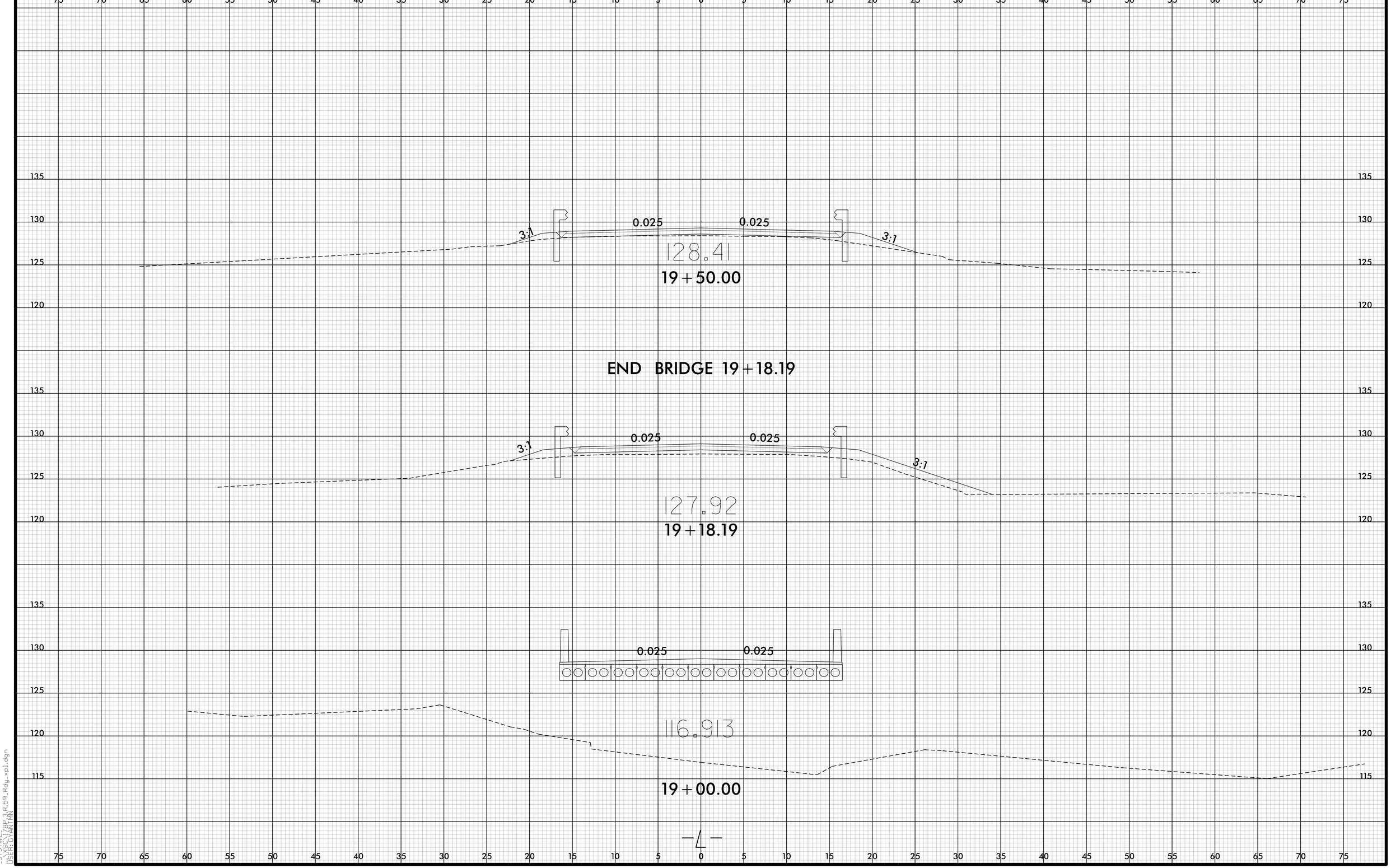

SYSTIME = 17BP.3.R.59_Rdg_xpl.dgn
USER: CYARTON

8/23/99

0 2.5 5	PROJ. REFERENCE NO.	SHEET NO.
	17BP.3.R.59	X-5

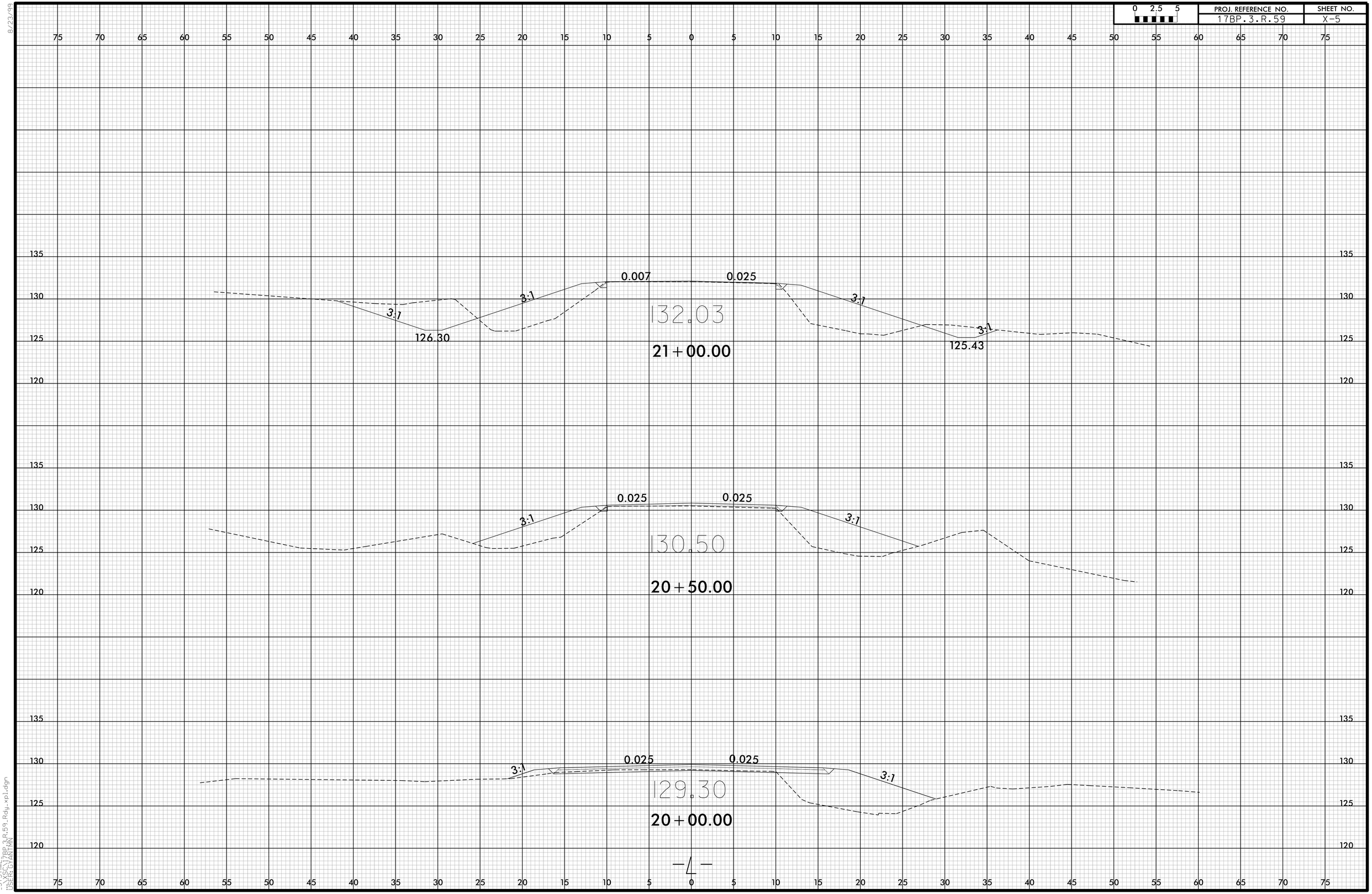

SYSTIME = 17BP.3.R.59_Rdy_xpl.dgn
USER: GYARTMN

8/23/99

0 2.5 5	PROJ. REFERENCE NO.	SHEET NO.
	17BP.3.R.59	X-6

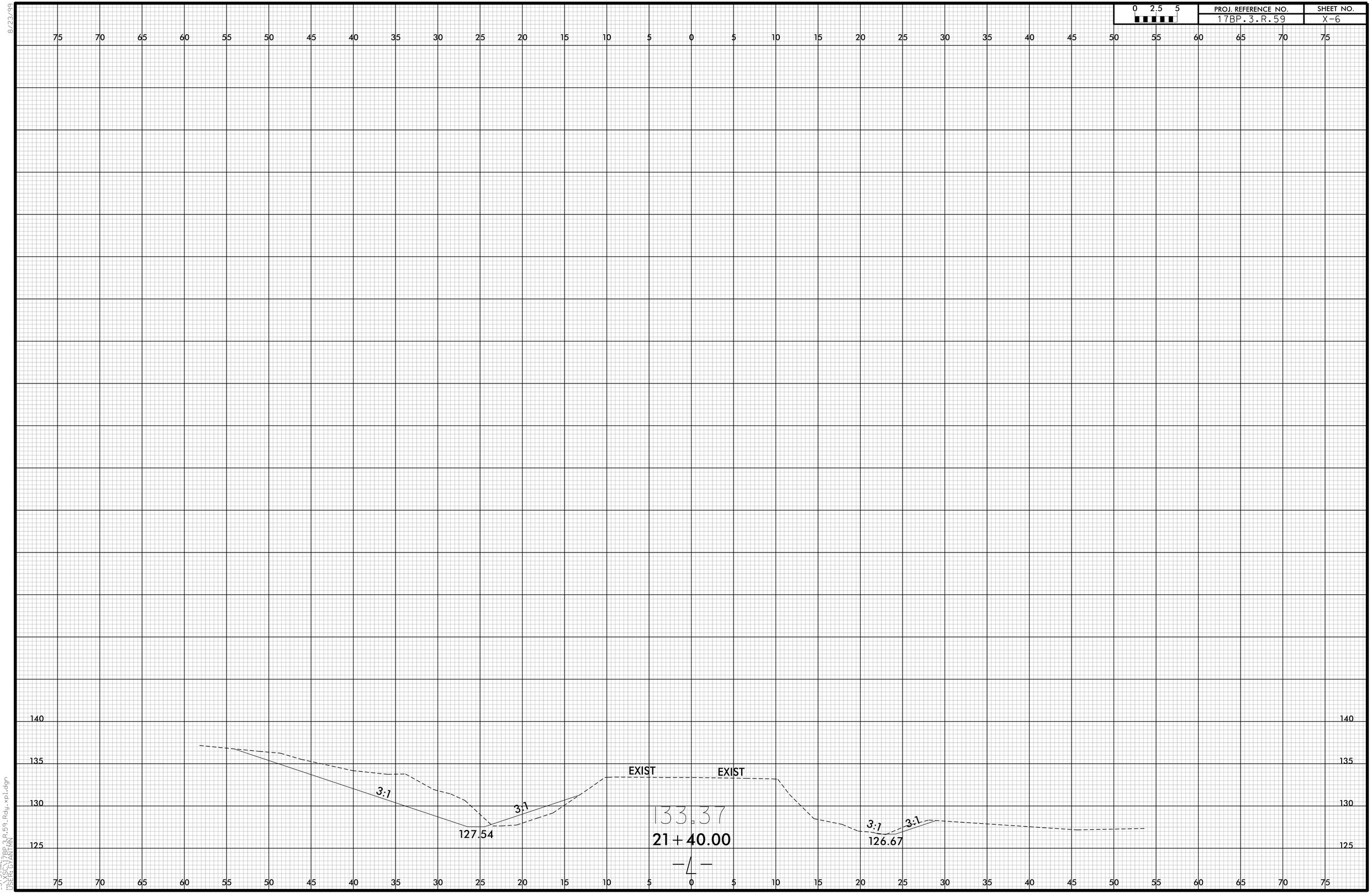

SYSTIME = 08/23/99
USER: GYARTMN
17BP.3.R.59_Rdy_xpl.dgn

PROJECT: 17BP.3.R.59

CONTRACT: DC00210

STRUCTURE

STATE	STATE PROJECT REFERENCE NO.	SHEET NO.	TOTAL SHEETS
N.C.	17BP.3.R.59		19

STATE PROJ. NO.	F. A. PROJ. NO.	DESCRIPTION
17BP.3.R.59	N/A	P.E.
17BP.3.R.59	N/A	UTIL & R/W
17BP.3.R.59	N/A	CONSTR.

STATE OF NORTH CAROLINA
DIVISION OF HIGHWAYS

SAMPSON COUNTY

LOCATION: REPLACE BRIDGE 252 OVER TEN MILE SWAMP ON SR 1905 (W. MCGOWAN ROAD)

TYPE OF WORK: GRADING, DRAINAGE, PAVING, AND STRUCTURE

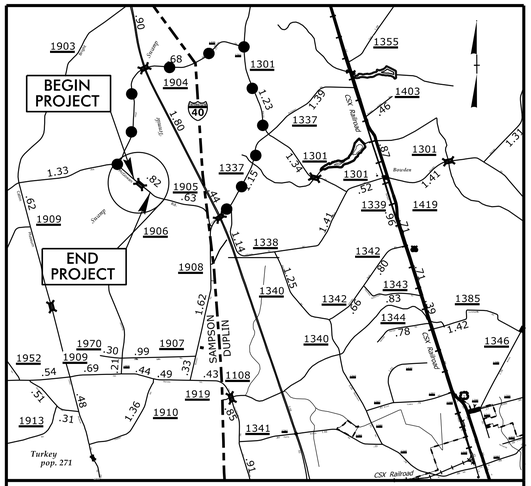

VICINITY MAP

OFF-SITE DETOUR ROUTE

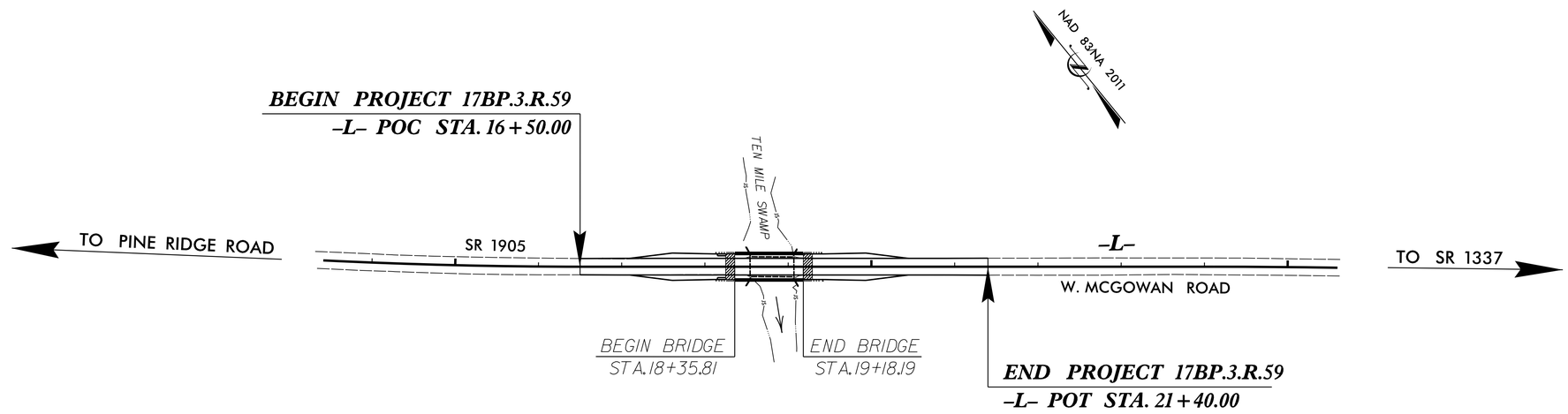

NORTH CAROLINA PROFESSIONAL SEAL 15301 ENGINEER TING HSILUNG FANG
7/31/2018

DocuSigned by: Ting H. Fang
60E43C9AEA60462...

STATE OF NORTH CAROLINA DEPARTMENT OF TRANSPORTATION

DESIGN DATA

ADT 2018 = 477 VPD
ADT 2038 = 861 VPD
DHV = N/A %
D = N/A %
T = N/A %
V = 60 MPH

FUNC CLASS = LOCAL
SUB-REGIONAL TIER

PROJECT LENGTH

LENGTH ROADWAY TIP PROJECT 17BP.3.R.59 = 0.078 MILES

LENGTH STRUCTURE TIP PROJECT 17BP.3.R.59 = 0.015 MILES

TOTAL LENGTH OF TIP PROJECT 17BP.3.R.59 = 0.093 MILES

Prepared In the Office of:

DIVISION OF HIGHWAYS
STRUCTURES MANAGEMENT UNIT
1000 BIRCH RIDGE DR.
RALEIGH, N.C. 27610

2018 STANDARD SPECIFICATIONS

LETTING DATE : SEPTEMBER 6, 2018

DAVID Z. KEISER, P.E.
PROJECT ENGINEER

TING H. FANG, P.E.
PROJECT DESIGN ENGINEER

CDM Smith

CDM SMITH
5400 Glenwood Avenue, Suite 400
Raleigh, NC 27612-3228
NC COA No. F-1255

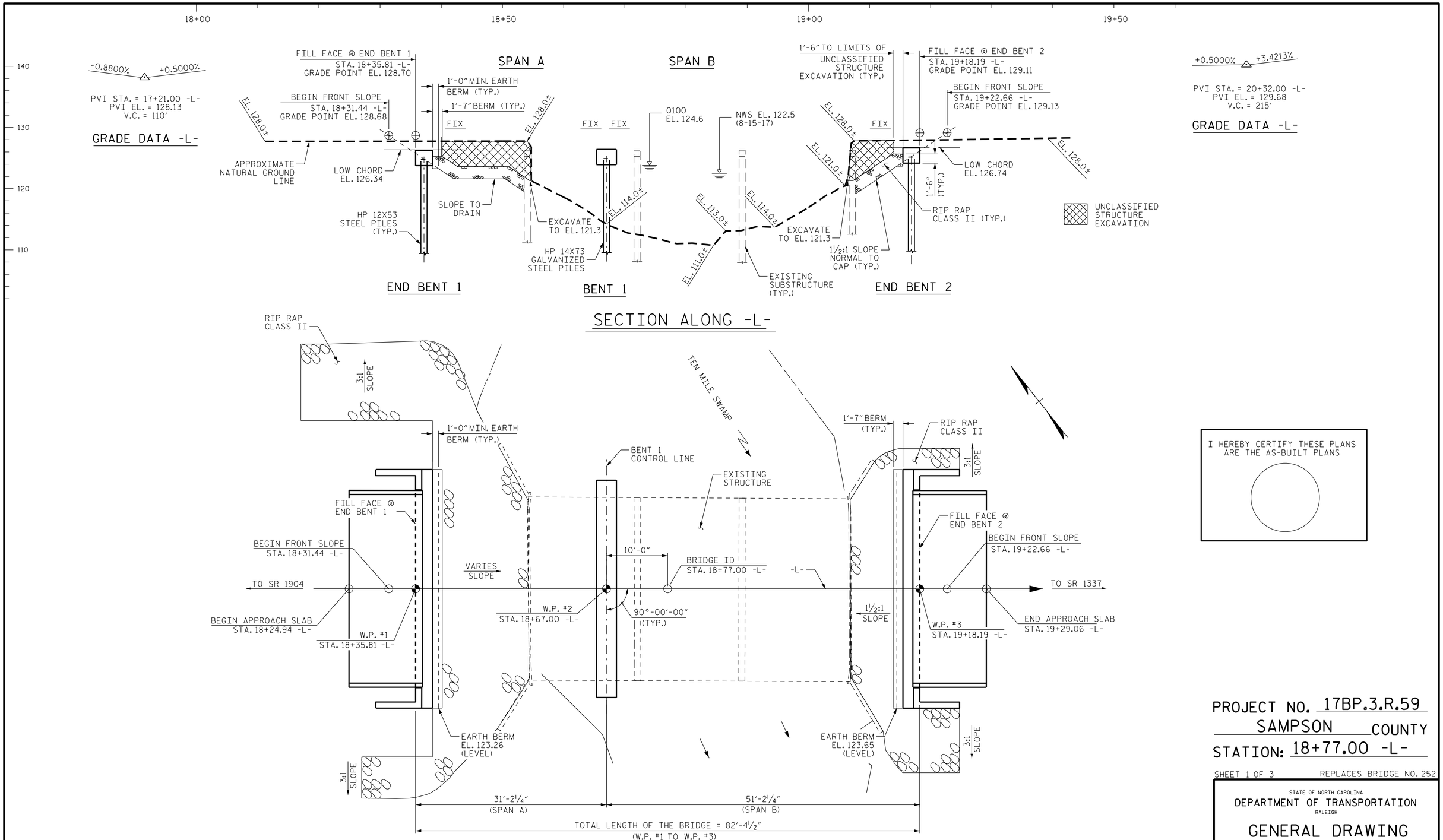

I HEREBY CERTIFY THESE PLANS ARE THE AS-BUILT PLANS

PROJECT NO. 17BP.3.R.59

SAMPSON COUNTY

STATION: 18+77.00 -L-

SHEET 1 OF 3 REPLACES BRIDGE NO. 252

DOCUMENT NOT CONSIDERED FINAL UNLESS ALL SIGNATURES COMPLETED

CDM Smith

CDM SMITH
5400 Glenwood Avenue, Suite 400
Raleigh, NC 27612-3228
NC COA No. F-1255

DRAWN BY : VDK DATE : 2/18
CHECKED BY : THF DATE : 2/18
DESIGN ENGINEER : VDK DATE : 2/18

DWG. No.

NORTH CAROLINA PROFESSIONAL SEAL 016301 ENGINEER TING H FANG
4/24/2018

STATE OF NORTH CAROLINA
DEPARTMENT OF TRANSPORTATION
RALEIGH

GENERAL DRAWING

FOR BRIDGE OVER
TEN MILE SWAMP ON SR 1905
BETWEEN SR 1904 &
SR 1906

REVISIONS							
NO.	BY:	DATE:	NO.	BY:	DATE:		
1			3				
2			4				

SHEET NO. S-01

TOTAL SHEETS 19

FILE: c:\pw_pll\bangh\d0928835\401_001_17BP3R59_SMU_GD01_001_810232.dgn
DATE: 4/2/2018 11:07:40 PM

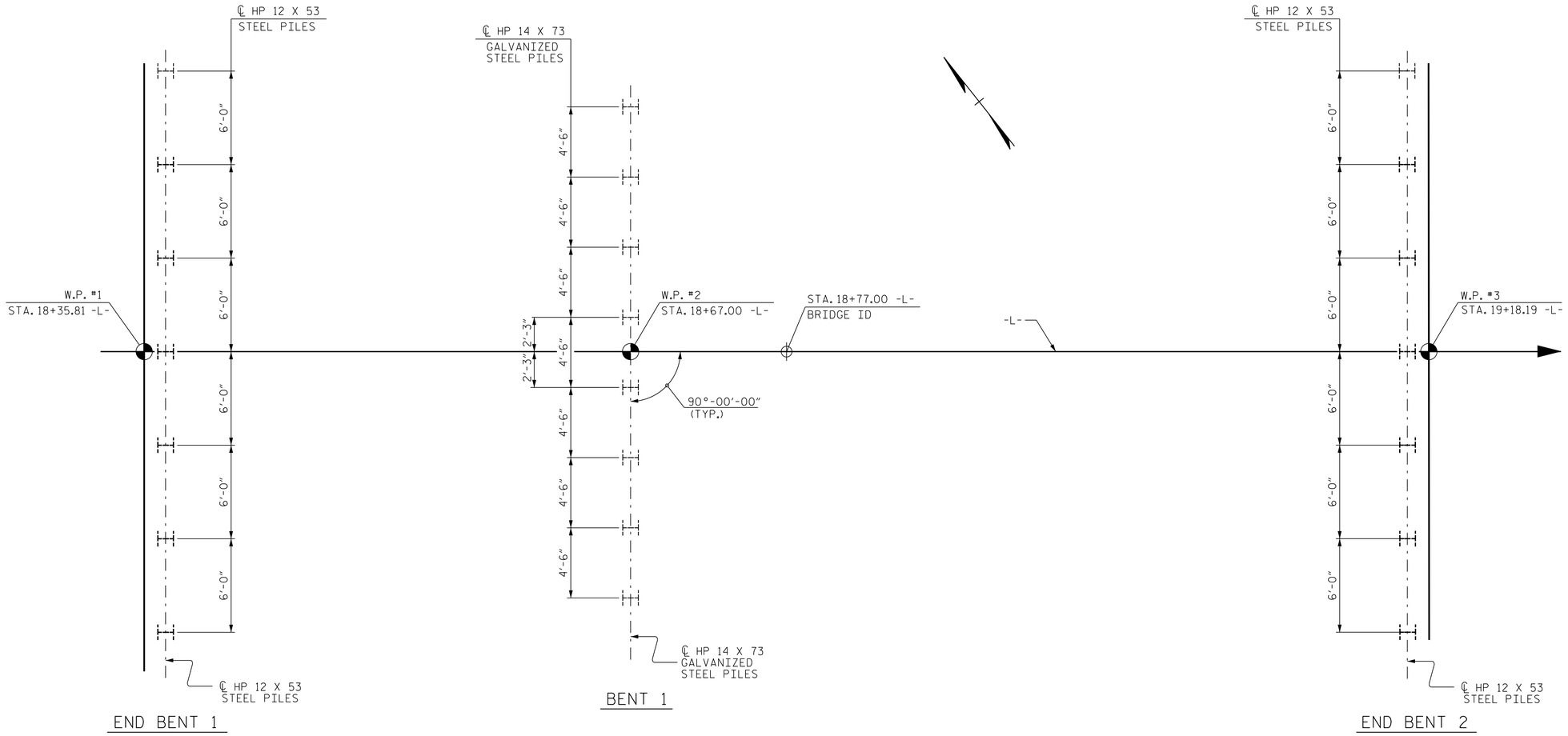

FOUNDATION LAYOUT

DIMENSIONS LOCATING PILES ARE SHOWN TO THE CENTERLINE OF PILES.

NOTES

FOR PILES, SEE SECTION 450 OF THE STANDARD SPECIFICATIONS.

PILES AT END BENT 1 ARE DESIGNED FOR A FACTORED RESISTANCE OF 55 TONS PER PILE.

PILES AT BENT 1 ARE DESIGNED FOR A FACTORED RESISTANCE OF 90 TONS PER PILE.

PILES AT END BENT 2 ARE DESIGNED FOR A FACTORED RESISTANCE OF 70 TONS PER PILE.

DRIVE PILES AT END BENT 1 TO A REQUIRED DRIVING RESISTANCE OF 95 TONS PER PILE.

DRIVE PILES AT BENT 1 TO A REQUIRED DRIVING RESISTANCE OF 155 TONS PER PILE. THIS REQUIRED DRIVING RESISTANCE INCLUDES ADDITIONAL RESISTANCE FOR SCOUR.

DRIVE PILES AT END BENT 2 TO A REQUIRED DRIVING RESISTANCE OF 120 TONS PER PILE.

INSTALL PILES AT END BENT 1 TO A TIP ELEVATION NO HIGHER THAN 100.0 FT.

INSTALL PILES AT BENT 1 TO A TIP ELEVATION NO HIGHER THAN 90.0 FT.

INSTALL PILES AT END BENT 2 TO A TIP ELEVATION NO HIGHER THAN 98.0 FT.

THE SCOUR CRITICAL ELEVATION FOR BENT 1 IS ELEVATION 106.0 FT. SCOUR CRITICAL ELEVATIONS ARE USED TO MONITOR POSSIBLE SCOUR PROBLEM DURING THE LIFE OF THE STRUCTURE.

TESTING PILES WITH THE PDA DURING DRIVING, RESTRIKING OR REDRIVING MAY BE REQUIRED. THE ENGINEER WILL DETERMINE THE NEED FOR PDA TESTING. FOR PDA TESTING, SEE SECTION 450 OF THE STANDARD SPECIFICATIONS.

PROJECT NO. 17BP.3.R.59
SAMPSON COUNTY
STATION: 18+77.00 -L-

SHEET 2 OF 3

DOCUMENT NOT CONSIDERED FINAL UNLESS ALL SIGNATURES COMPLETED

CDM Smith
CDM SMITH
5400 Glenwood Avenue, Suite 400
Raleigh, NC 27612-3228
NC COA No. F-1255

DRAWN BY :	VDK	DATE :	2/18
CHECKED BY :	THF	DATE :	2/18
DESIGN ENGINEER :	VDK	DATE :	2/18

DWG. No.

NORTH CAROLINA PROFESSIONAL SEAL 016301 ENGINEER TING H FANG
4/24/2018

STATE OF NORTH CAROLINA
DEPARTMENT OF TRANSPORTATION
RALEIGH

GENERAL DRAWING

FOR BRIDGE OVER
TEN MILE SWAMP ON SR 1905
BETWEEN SR 1904
AND SR 1906

REVISIONS						SHEET NO.
NO.	BY:	DATE:	NO.	BY:	DATE:	S-02
1			3			TOTAL SHEETS
2			4			19

FILE: c:\pw_pll\length\d0928835\d01_003_17BP3R59_SMU_GD02_002_810223.dgn
DATE: 4/23/2018 11:07:47 PM

TOTAL BILL OF MATERIAL

	REMOVAL OF EXISTING STRUCTURE	ASBESTOS ASSESSMENT	PDA TESTING	UNCLASSIFIED STRUCTURE EXCAVATION	CLASS A CONCRETE	BRIDGE APPROACH SLABS	REINFORCING STEEL	PILE DRIVING EQUIPMENT SETUP FOR HP 12X53 STEEL PILES	PILE DRIVING EQUIPMENT SETUP FOR HP 14X73 GALVANIZED STEEL PILES	HP 12 X 53 STEEL PILES		HP 14 X 73 GALVANIZED STEEL PILES		PILE REDRIVES	VERTICAL CONCRETE BARRIER RAIL	RIP RAP CLASS II (2'-0" THICK)	GEOTEXTILE FOR DRAINAGE	ELASTOMERIC BEARINGS	3'-0" X 1'-9" PRESTRESSED CONCRETE CORED SLABS	
	LUMP SUM	LUMP SUM	EA.	LUMP SUM	CU. YDS.	LUMP SUM	LBS.	EA.	EA.	NO.	LIN. FT.	NO.	LIN. FT.	EA.	LIN. FT.	TON	SQ. YD.	LUMP SUM	NO.	LIN. FT.
SUPERSTRUCTURE															160.25			LUMP SUM	22	880
END BENT 1				LUMP SUM	14.2		2,115	7		7	350.0			4		117	130			
BENT 1					10.7		2,136		8			8	520.0	4						
END BENT 2				LUMP SUM	14.2		2,115	7		7	420.0			4		45	50			
TOTAL	LUMP SUM	LUMP SUM	1	LUMP SUM	39.1	LUMP SUM	6,366	14	8	14	770.0	8	520.0	12	160.25	162	180	LUMP SUM	22	880

B.M. #: 1 RR SPIKE IN 18" GUM, 32.61' RIGHT OF STA. 19+44.85 -L-, EL. 126.96

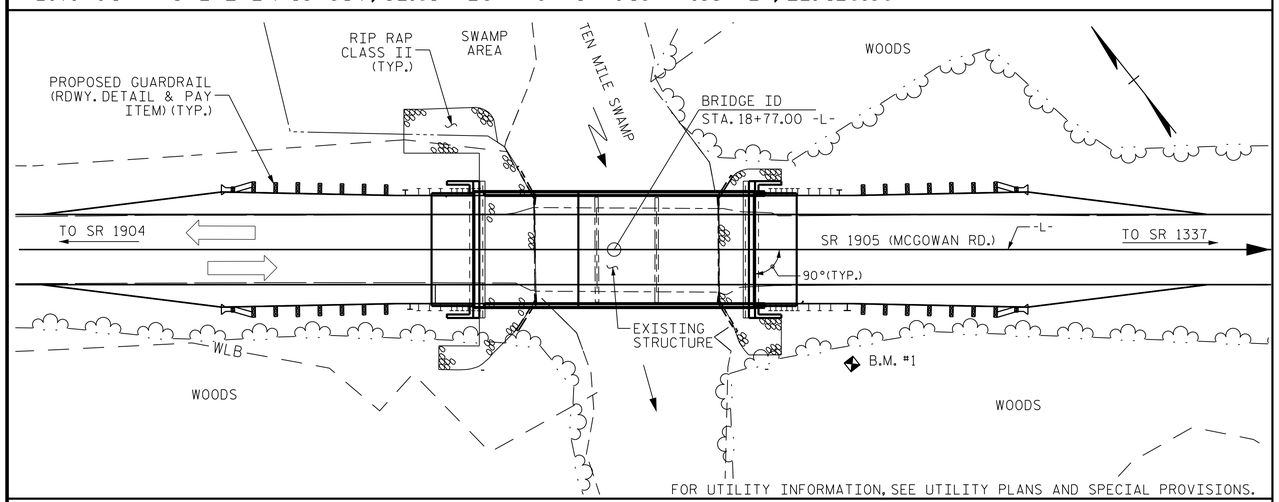

LOCATION SKETCH

NOTES:

ASSUMED LIVE LOAD = HL-93 OR ALTERNATE LOADING.

THIS BRIDGE HAS BEEN DESIGNED IN ACCORDANCE WITH THE AASHTO LRFD BRIDGE DESIGN SPECIFICATIONS

THIS BRIDGE IS LOCATED IN SEISMIC PERFORMANCE ZONE 1.

FOR OTHER DESIGN DATA AND GENERAL NOTES, SEE SHEET SN.

FOR EROSION CONTROL MEASURES SEE EROSION CONTROL PLANS.

THIS STRUCTURE HAS BEEN DESIGNED IN ACCORDANCE WITH "HEC-18 EVALUATING SCOUR AT BRIDGES".

THIS BRIDGE SHALL BE CONSTRUCTED USING TOP-DOWN CONSTRUCTION METHODS. THE USE OF A TEMPORARY CAUSEWAY OR WORK BRIDGE IS NOT PERMITTED.

REMOVAL OF THE EXISTING BRIDGE SHALL BE PERFORMED SO AS NOT TO ALLOW DEBRIS TO FALL INTO THE WATER. THE CONTRACTOR SHALL REMOVE THE BRIDGE AND SUBMIT PLANS FOR DEMOLITION IN ACCORDANCE WITH ARTICLE 402-2 OF THE STANDARD SPECIFICATIONS.

THE SUBSTRUCTURE OF THE EXISTING BRIDGE INDICATED ON THE PLANS IS FROM THE BEST INFORMATION AVAILABLE. SINCE THIS INFORMATION IS SHOWN FOR THE CONVENIENCE OF THE CONTRACTOR, THE CONTRACTOR SHALL HAVE NO CLAIM WHATSOEVER AGAINST THE DEPARTMENT OF TRANSPORTATION FOR ANY DELAYS OR ADDITIONAL COST INCURRED BASED ON DIFFERENCES BETWEEN THE EXISTING BRIDGE SUBSTRUCTURE SHOWN ON THE PLANS AND THE ACTUAL CONDITIONS AT THE PROJECT SITE.

FOR BENT 1, ONLY PARTIAL GALVANIZING OF THE PILES IS REQUIRED. SEE BENT 1 SHEET FOR REQUIRED GALVANIZED LENGTHS. PAYMENT FOR PARTIALLY GALVANIZED PILES WILL BE MADE UNDER THE CONTRACT UNIT PRICE FOR GALVANIZED STEEL PILES.

THE MATERIAL SHOWN IN THE CROSS-HATCHED AREA SHALL BE EXCAVATED FOR A DISTANCE OF 30 FT. LEFT SIDE, 35 FT. RIGHT SIDE AT END BENT 1 AND 30 FT. LEFT SIDE, 25 FT. RIGHT SIDE AT END BENT 2 OF CENTERLINE ROADWAY AS DIRECTED BY THE ENGINEER. THIS WORK WILL BE PAID FOR AT THE CONTRACT LUMP SUM PRICE FOR UNCLASSIFIED STRUCTURE EXCAVATION. SEE SECTION 412 OF THE STANDARD SPECIFICATIONS.

THE EXISTING STRUCTURE CONSISTING OF 3 SPANS: 1 @ 17'-10", 1 @ 17'-1" & 1 @ 17'-10" WITH A CLEAR ROADWAY WIDTH OF 24'-0" AND RC FLOOR ON TIMBER JOISTS; SUBSTRUCTURE CONSISTING OF TIMBER CAPS ON TIMBER PILES AT END BENTS AND INTERIOR BENTS LOCATED AT THE SITE OF THE PROPOSED BRIDGE SHALL BE REMOVED. THE EXISTING BRIDGE IS PRESENTLY POSTED FOR LOAD LIMIT.

FOR FALSEWORK AND FORMWORK, SEE SPECIAL PROVISIONS.

FOR SUBMITTAL OF WORKING DRAWINGS, SEE SPECIAL PROVISIONS.

FOR CRANE SAFETY, SEE SPECIAL PROVISIONS.

FOR GROUT FOR STRUCTURES, SEE SPECIAL PROVISIONS.

FOR ASBESTOS ASSESSMENT FOR BRIDGE DEMOLITION AND RENOVATION ACTIVITIES, SEE SPECIAL PROVISIONS.

ASPHALT WEARING SURFACE IS INCLUDED IN ROADWAY QUANTITY ON ROADWAY PLANS.

HYDRAULIC DATA

DESIGN DISCHARGE	= 550 CFS
FREQUENCY OF DESIGN FLOOD	= 25 YR.
DESIGN HIGH WATER ELEVATION	= 124.1 FT.
DRAINAGE AREA	= 3.65 SQ. MI.
BASE DISCHARGE (Q100)	= 1060 CFS
BASE HIGH WATER ELEVATION	= 125.1 FT.

OVERTOPPING FLOOD DATA

OVERTOPPING DISCHARGE	= 3300 CFS
FREQUENCY OF OVERTOPPING FLOOD	= 500+ YRS.
OVERTOPPING FLOOD ELEVATION (AT STA. 17+35.00 -L-)	= 128.4 FT.

PROJECT NO. 17BP.3.R.59
SAMPSON COUNTY
STATION: 18+77.00 -L-

SHEET 3 OF 3

STATE OF NORTH CAROLINA
DEPARTMENT OF TRANSPORTATION
RALEIGH

GENERAL DRAWING

FOR BRIDGE OVER TEN MILE SWAMP ON SR 1905 BETWEEN SR 1904 & SR 1906

DOCUMENT NOT CONSIDERED FINAL UNLESS ALL SIGNATURES COMPLETED

CDM Smith
CDM SMITH
5400 Glenwood Avenue, Suite 400
Raleigh, NC 27612-3228
NC COA No. F-1255

DRAWN BY : VDK DATE : 2/18
CHECKED BY : THF DATE : 2/18
DESIGN ENGINEER : VDK DATE : 2/18

DWG. No.

NORTH CAROLINA PROFESSIONAL SEAL 016301 ENGINEER TING H FANG
4/24/2018

REVISIONS						SHEET NO.
NO.	BY:	DATE:	NO.	BY:	DATE:	S-03
1			3			TOTAL SHEETS
2			4			19

FILE: c:\pw_pll\length\d0938835\401_005_17BP3R59_SAMJ_GD03_003_810232.dgn
DATE: 4/22/18 11:07:55 PM

LOAD AND RESISTANCE FACTOR RATING (LRFD) SUMMARY FOR PRESTRESSED CONCRETE CORED SLAB UNITS

LEVEL		VEHICLE	WEIGHT (W) (TONS)	CONTROLLING LOAD RATING	MINIMUM RATING FACTORS (RF)	TONS = W X RF	STRENGTH I LIMIT STATE											SERVICE III LIMIT STATE						COMMENT NUMBER
								MOMENT					SHEAR						MOMENT					
							LIVELOAD FACTORS	DISTRIBUTION FACTORS (DF)	RATING FACTOR	SPAN	GIRDER LOCATION	DISTANCE FROM LEFT END OF SPAN (ft)	DISTRIBUTION FACTORS (DF)	RATING FACTOR	SPAN	GIRDER LOCATION	DISTANCE FROM LEFT END OF SPAN (ft)	LIVELOAD FACTORS	DISTRIBUTION FACTORS (DF)	RATING FACTOR	SPAN	GIRDER LOCATION	DISTANCE FROM LEFT END OF SPAN (ft)	
DESIGN LOAD RATING		HL-93(Inv)	N/A	1	1.037	--	1.75	0.283	1.83	30'	EL	14.5	0.574	**1.04**	30'	EL	**1.45**	0.80	0.283	1.58	30'	EL	14.5	
		HL-93(Opr)	N/A	--	1.344	--	1.35	0.283	2.38	30'	EL	14.5	0.574	1.34	30'	EL	1.45	N/A	--	--	--	--	--	
		HS-20(Inv)	36.000	2	1.183	42.587	1.75	0.283	2.53	30'	EL	11.6	0.574	**1.18**	30'	EL	**1.45**	0.80	0.283	2.20	30'	EL	11.6	
		HS-20(Opr)	36.000	--	1.533	55.205	1.35	0.283	3.28	30'	EL	11.6	0.574	1.53	30'	EL	1.45	N/A	--	--	--	--	--	
LEGAL LOAD RATING	SV	SNSH	13.500	--	2.895	39.081	1.4	0.283	5.18	30'	EL	14.5	0.574	2.89	30'	EL	1.45	0.80	0.283	3.56	30'	EL	14.5	
		SNGARBS2	20.000	--	2.240	44.792	1.4	0.283	4.53	30'	EL	11.6	0.574	2.24	30'	EL	1.45	0.80	0.283	3.15	30'	EL	11.6	
		SNAGRIS2	22.000	--	2.157	47.463	1.4	0.283	4.60	30'	EL	11.6	0.574	2.16	30'	EL	1.45	0.80	0.283	3.20	30'	EL	11.6	
		SNCOTTS3	27.250	--	1.462	39.849	1.4	0.283	2.60	30'	EL	14.5	0.574	1.46	30'	EL	1.45	0.80	0.283	1.79	30'	EL	14.5	
		SNAGGRS4	34.925	--	1.346	46.999	1.4	0.283	2.50	30'	EL	14.5	0.574	1.35	30'	EL	1.45	0.80	0.283	1.72	30'	EL	14.5	
		SNS5A	35.550	--	1.427	50.733	1.4	0.283	2.42	30'	EL	14.5	0.574	1.43	30'	EL	1.45	0.80	0.283	1.67	30'	EL	14.5	
		SNS6A	39.950	--	1.341	53.590	1.4	0.283	2.29	30'	EL	14.5	0.574	1.34	30'	EL	1.45	0.80	0.283	1.58	30'	EL	14.5	
		SNS7B	42.000	--	1.369	57.505	1.4	0.283	2.23	30'	EL	14.5	0.574	1.37	30'	EL	1.45	0.80	0.283	1.53	30'	EL	14.5	
	TTST	TNAGRIT3	33.000	--	1.593	52.580	1.4	0.283	2.97	30'	EL	14.5	0.574	1.59	30'	EL	1.45	0.80	0.283	2.04	30'	EL	14.5	
		TNT4A	33.075	--	1.483	49.043	1.4	0.283	2.82	30'	EL	14.5	0.574	1.48	30'	EL	1.45	0.80	0.283	1.94	30'	EL	14.5	
		TNT6A	41.600	--	1.433	59.622	1.4	0.283	2.56	30'	EL	14.5	0.574	1.43	30'	EL	1.45	0.80	0.283	1.76	30'	EL	14.5	
		TNT7A	42.000	--	1.363	57.264	1.4	0.283	2.64	30'	EL	14.5	0.574	1.36	30'	EL	1.45	0.80	0.283	1.82	30'	EL	14.5	
		TNT7B	42.000	--	1.331	55.915	1.4	0.283	2.49	30'	EL	14.5	0.574	1.33	30'	EL	1.45	0.80	0.283	1.72	30'	EL	14.5	
		TNAGRIT4	43.000	--	1.287	55.356	1.4	0.283	2.58	30'	EL	14.5	0.574	1.29	30'	EL	1.45	0.80	0.283	1.78	30'	EL	14.5	
		TNAGT5A	45.000	--	1.381	62.151	1.4	0.283	2.50	30'	EL	14.5	0.574	1.38	30'	EL	1.45	0.80	0.283	1.72	30'	EL	14.5	
		TNAGT5B	45.000	3	1.212	54.540	1.4	0.283	2.41	30'	EL	11.6	0.574	**1.21**	30'	EL	**1.45**	0.80	0.283	1.66	30'	EL	11.6	

LOAD FACTORS:

DESIGN LOAD RATING FACTORS	LIMIT STATE	γ_{DC}	γ_{DW}
	STRENGTH I	1.25	1.50
	SERVICE III	1.00	1.00

NOTES:

MINIMUM RATING FACTORS ARE BASED ON THE STRENGTH I AND SERVICE III LIMIT STATES.

ALLOWABLE STRESSES FOR SERVICE III LIMIT STATE ARE AS REQUIRED FOR DESIGN.

COMMENTS:

1.
2.
3.
4.

 # CONTROLLING LOAD RATING

1 DESIGN LOAD RATING (HL-93)
2 DESIGN LOAD RATING (HS-20)
3 LEGAL LOAD RATING **
** SEE CHART FOR VEHICLE TYPE

GIRDER LOCATION

I - INTERIOR GIRDER
EL - EXTERIOR LEFT GIRDER
ER - EXTERIOR RIGHT GIRDER

LRFR SUMMARY
FOR SPAN A

PROJECT NO. 17BP.3.R.59
SAMPSON COUNTY
STATION: 18+77.00 -L-

SHEET 1 OF 2

STATE OF NORTH CAROLINA
DEPARTMENT OF TRANSPORTATION
RALEIGH

LRFR SUMMARY FOR 30' CORED SLAB UNIT 90° SKEW SPAN A
(NON-INTERSTATE TRAFFIC)

DOCUMENT NOT CONSIDERED FINAL UNLESS ALL SIGNATURES COMPLETED

CDM Smith
CDM SMITH
5400 Glenwood Avenue, Suite 400
Raleigh, NC 27612-3228
NC COA No. F-1255

DRAWN BY : VDK DATE : 2/18
CHECKED BY : THF DATE : 2/18
DESIGN ENGINEER : VDK DATE : 2/18

DWG. No.

NORTH CAROLINA PROFESSIONAL SEAL 016301 ENGINEER TING H FANG
4/24/2018

REVISIONS						SHEET NO.
NO.	BY:	DATE:	NO.	BY:	DATE:	S-04
1			3			TOTAL SHEETS
2			4			19

FILE: C:\pw_pll\tmgh\d0938835\d01_007_17BP.3.R.59_SMU_LRFR_004_810252.dgn
DATE: 4/25/2018 11:06:03 PM

STD. NO. 21LRFR1_75&90S_30L

LOAD AND RESISTANCE FACTOR RATING (LRFD) SUMMARY FOR PRESTRESSED CONCRETE CORED SLAB UNITS

LEVEL		VEHICLE	WEIGHT (W) (TONS)	CONTROLLING LOAD RATING	MINIMUM RATING FACTORS (RF)	TONS = W X RF	STRENGTH I LIMIT STATE											SERVICE III LIMIT STATE						COMMENT NUMBER
								MOMENT					SHEAR						MOMENT					
							LIVELOAD FACTORS	DISTRIBUTION FACTORS (DF)	RATING FACTOR	SPAN	GIRDER LOCATION	DISTANCE FROM LEFT END OF SPAN (ft)	DISTRIBUTION FACTORS (DF)	RATING FACTOR	SPAN	GIRDER LOCATION	DISTANCE FROM LEFT END OF SPAN (ft)	LIVELOAD FACTORS	DISTRIBUTION FACTORS (DF)	RATING FACTOR	SPAN	GIRDER LOCATION	DISTANCE FROM LEFT END OF SPAN (ft)	
DESIGN LOAD RATING		HL-93(Inv)	N/A	(1)	1.394	--	1.75	0.276	1.57	50'	EL	24.5	0.531	**1.39**	50'	EL	**2.45**	0.80	0.276	1.44	50'	EL	24.5	
		HL-93(Opr)	N/A	--	1.807	--	1.35	0.276	2.03	50'	EL	24.5	0.531	1.81	50'	EL	2.45	N/A	--	--	--	--	--	
		HS-20(Inv)	36.000	(2)	1.667	60.007	1.75	0.276	1.95	50'	EL	24.5	0.531	**1.67**	50'	EL	**2.45**	0.80	0.276	1.79	50'	EL	24.5	
		HS-20(Opr)	36.000	--	2.161	77.787	1.35	0.276	2.52	50'	EL	24.5	0.531	2.16	50'	EL	2.45	N/A	--	--	--	--	--	
LEGAL LOAD RATING	SV	SNSH	13.500	--	3.635	49.079	1.4	0.276	4.95	50'	EL	24.5	0.531	4.70	50'	EL	2.45	0.80	0.276	3.64	50'	EL	24.5	
		SNGARBS2	20.000	--	2.871	57.420	1.4	0.276	3.91	50'	EL	24.5	0.531	3.42	50'	EL	2.45	0.80	0.276	2.87	50'	EL	24.5	
		SNAGRIS2	22.000	--	2.778	61.109	1.4	0.276	3.78	50'	EL	19.6	0.531	3.21	50'	EL	2.45	0.80	0.276	2.78	50'	EL	24.5	
		SNCOTTS3	27.250	--	1.814	49.418	1.4	0.276	2.47	50'	EL	24.5	0.531	2.36	50'	EL	2.45	0.80	0.276	1.81	50'	EL	24.5	
		SNAGGRS4	34.925	--	1.577	55.063	1.4	0.276	2.15	50'	EL	24.5	0.531	2.01	50'	EL	2.45	0.80	0.276	1.58	50'	EL	24.5	
		SNS5A	35.550	--	1.537	54.657	1.4	0.276	2.09	50'	EL	24.5	0.531	2.07	50'	EL	2.45	0.80	0.276	1.54	50'	EL	24.5	
		SNS6A	39.950	--	1.438	57.430	1.4	0.276	1.96	50'	EL	24.5	0.531	1.91	50'	EL	2.45	0.80	0.276	1.44	50'	EL	24.5	
		SNS7B	42.000	--	1.370	57.540	1.4	0.276	1.87	50'	EL	24.5	0.531	1.91	50'	EL	2.45	0.80	0.276	1.37	50'	EL	24.5	
	TTST	TNAGRIT3	33.000	--	1.761	58.118	1.4	0.276	2.40	50'	EL	24.5	0.531	2.25	50'	EL	2.45	0.80	0.276	1.76	50'	EL	24.5	
		TNT4A	33.075	--	1.777	58.759	1.4	0.276	2.42	50'	EL	24.5	0.531	2.17	50'	EL	2.45	0.80	0.276	1.78	50'	EL	24.5	
		TNT6A	41.600	--	1.480	61.558	1.4	0.276	2.01	50'	EL	24.5	0.531	2.08	50'	EL	2.45	0.80	0.276	1.48	50'	EL	24.5	
		TNT7A	42.000	--	1.502	63.087	1.4	0.276	2.05	50'	EL	24.5	0.531	1.94	50'	EL	2.45	0.80	0.276	1.50	50'	EL	24.5	
		TNT7B	42.000	--	1.566	65.773	1.4	0.276	2.13	50'	EL	24.5	0.531	1.84	50'	EL	2.45	0.80	0.276	1.57	50'	EL	24.5	
		TNAGRIT4	43.000	--	1.486	63.902	1.4	0.276	2.02	50'	EL	24.5	0.531	1.77	50'	EL	2.45	0.80	0.276	1.49	50'	EL	24.5	
		TNAGT5A	45.000	--	1.388	62.470	1.4	0.276	1.89	50'	EL	24.5	0.531	1.80	50'	EL	2.45	0.80	0.276	1.39	50'	EL	24.5	
		TNAGT5B	45.000	(3)	1.360	61.206	1.4	0.276	1.85	50'	EL	24.5	0.531	1.68	50'	EL	2.45	0.80	0.276	**1.36**	50'	EL	**24.5**	

LOAD FACTORS:

DESIGN LOAD RATING FACTORS	LIMIT STATE	γ_{DC}	γ_{DW}
	STRENGTH I	1.25	1.50
	SERVICE III	1.00	1.00

NOTES:

MINIMUM RATING FACTORS ARE BASED ON THE STRENGTH I AND SERVICE III LIMIT STATES.

ALLOWABLE STRESSES FOR SERVICE III LIMIT STATE ARE AS REQUIRED FOR DESIGN.

COMMENTS:

1.
2.
3.
4.

(#) CONTROLLING LOAD RATING

(1) DESIGN LOAD RATING (HL-93)

(2) DESIGN LOAD RATING (HS-20)

(3) LEGAL LOAD RATING **

** SEE CHART FOR VEHICLE TYPE

GIRDER LOCATION

I - INTERIOR GIRDER
EL - EXTERIOR LEFT GIRDER
ER - EXTERIOR RIGHT GIRDER

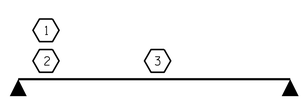

LRFR SUMMARY

FOR SPAN B

PROJECT NO. 17BP.3.R.59

SAMPSON COUNTY

STATION: 18+77.00 -L-

SHEET 2 OF 2

STATE OF NORTH CAROLINA
DEPARTMENT OF TRANSPORTATION
RALEIGH

LRFR SUMMARY FOR 50' CORED SLAB UNIT 90° SKEW SPAN B

(NON-INTERSTATE TRAFFIC)

DOCUMENT NOT CONSIDERED FINAL UNLESS ALL SIGNATURES COMPLETED

CDM Smith

CDM SMITH
5400 Glenwood Avenue, Suite 400
Raleigh, NC 27612-3228
NC COA No. F-1255

DRAWN BY : VDK DATE : 2/18
CHECKED BY : THF DATE : 2/18
DESIGN ENGINEER : VDK DATE : 2/18

DWG. No.

NORTH CAROLINA PROFESSIONAL SEAL 016301 ENGINEER JING H FANG
4/24/2018

REVISIONS						SHEET NO.
NO.	BY:	DATE:	NO.	BY:	DATE:	S-05
1			3			TOTAL SHEETS
2			4			19

STD. NO. 21LRFR1_75&90S_50L

FILE: C:\pw_pll\length\d0938835\d01_009_17BP3R59_SMU_LRFR_005_810252.dgn
DATE: 4/25/2018 11:08:11 PM

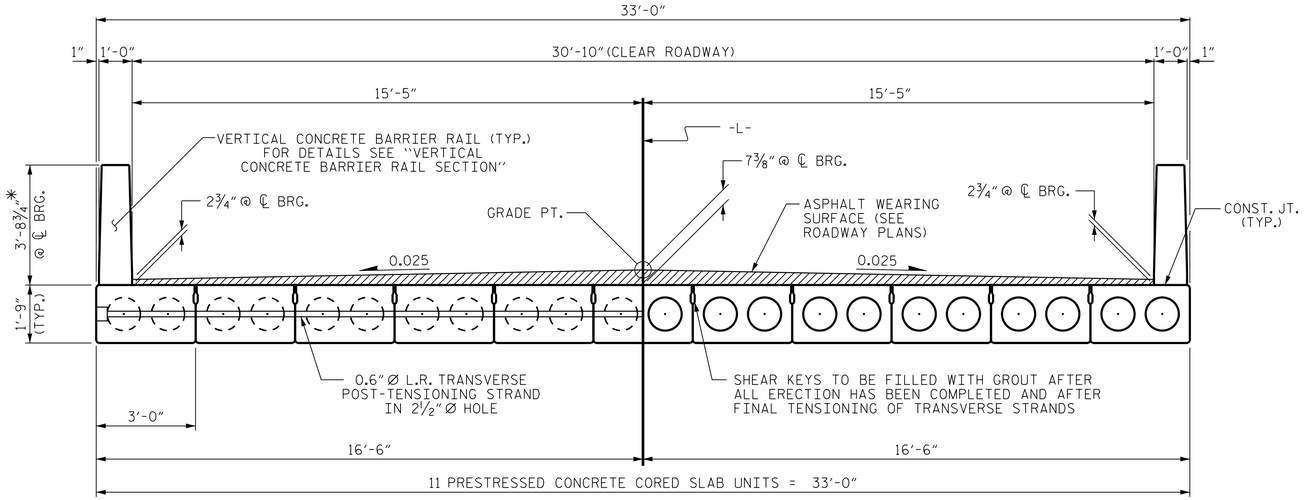

HALF SECTION
AT INTERMEDIATE DIAPHRAGMS

HALF SECTION
THROUGH VOIDS

TYPICAL SECTION

* - THE MAXIMUM BARRIER RAIL HEIGHT AND ASPHALT THICKNESS IS SHOWN. THE HEIGHT OF THE BARRIER RAIL AND ASPHALT THICKNESS VARIES WHILE THE TOP OF THE BARRIER RAIL FOLLOWS THE PROFILE OF THE GUTTERLINE. FOR RAIL HEIGHT DETAILS AND ASPHALT THICKNESS SEE THE "VERTICAL CONCRETE BARRIER RAIL SECTION" DETAIL.

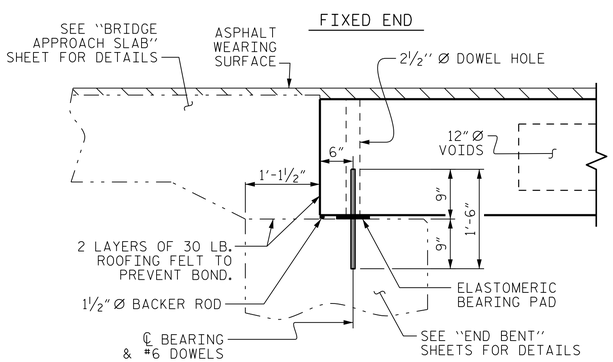

SECTION AT END BENT

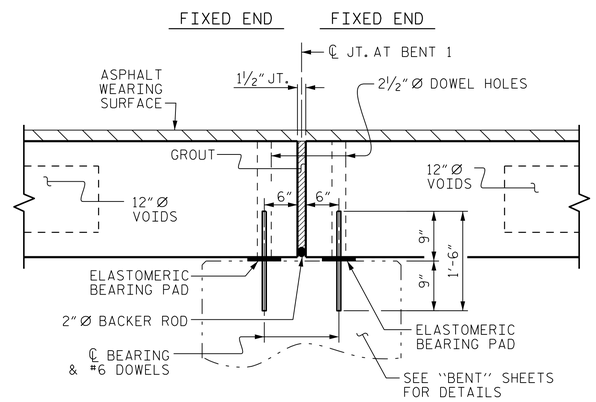

SECTION AT BENT 1

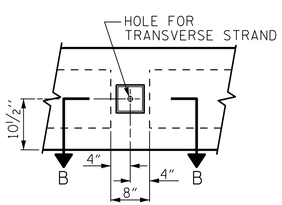

ELEVATION VIEW

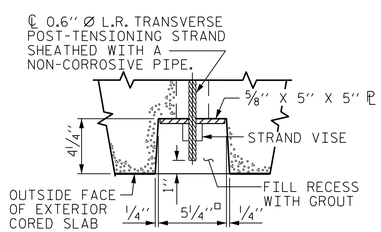

SECTION B-B

GROUTED RECESS AT END OF POST-TENSIONED STRAND OF CORED SLABS

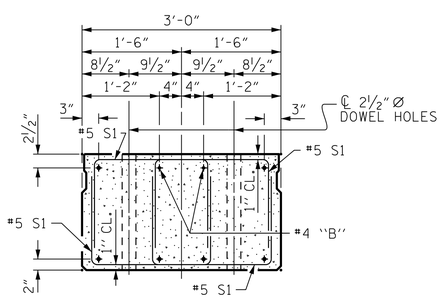

END ELEVATION

SHOWING PLACEMENT OF DOUBLE STIRRUPS AND LOCATION OF DOWEL HOLES. (STRAND LAYOUT NOT SHOWN.) INTERIOR SLAB UNIT SHOWN-EXTERIOR SLAB UNIT SIMILAR EXCEPT SHEAR KEY LOCATION.

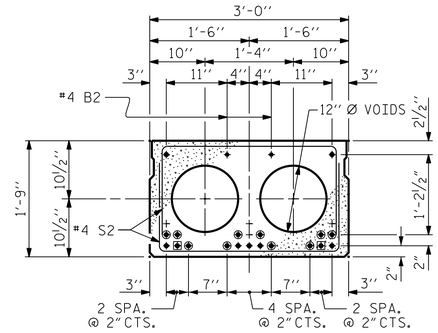

INTERIOR SLAB SECTION
(30' UNIT)
(9 STRANDS REQUIRED)

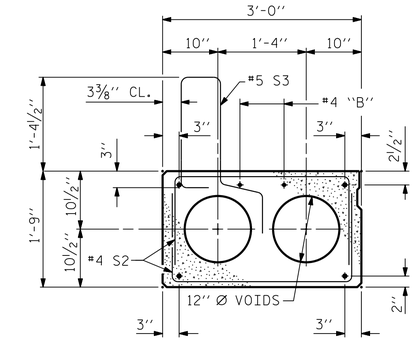

EXT. SLAB SECTION
(FOR PRESTRESSED STRAND LAYOUT, SEE INTERIOR SLAB SECTION.)

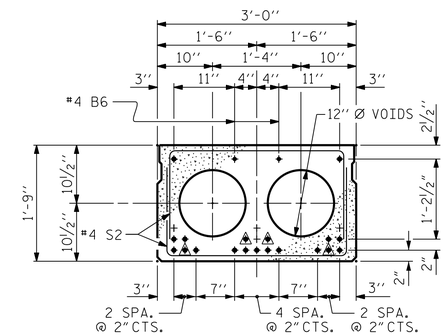

INTERIOR SLAB SECTION
(50' UNIT)
(19 STRANDS REQUIRED)

0.6" Ø LOW RELAXATION STRAND LAYOUT

BOND SHALL BE BROKEN ON THESE STRANDS FOR A DISTANCE OF 6'-0" FROM END OF CORED SLAB UNIT. SEE STANDARD SPECIFICATIONS, ARTICLE 1078-7.

BOND SHALL BE BROKEN ON THESE STRANDS FOR A DISTANCE OF 2'-0" FROM END OF CORED SLAB UNIT. SEE STANDARD SPECIFICATIONS, ARTICLE 1078-7.

OPTIONAL FULL LENGTH DEBONDED STRANDS. THESE STRANDS ARE NOT REQUIRED. IF THE FABRICATOR CHOOSES TO INCLUDE THESE STRANDS IN THE CORED SLAB UNIT, THE STRANDS SHALL BE DEBONDED FOR THE FULL LENGTH OF THE UNIT AT NO ADDITIONAL COST. SEE STANDARD SPECIFICATIONS, ARTICLE 1078-7.

DEBONDING LEGEND

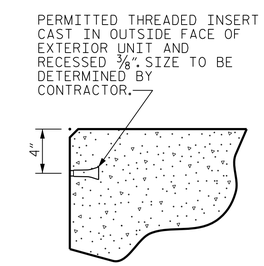

THREADED INSERT DETAIL

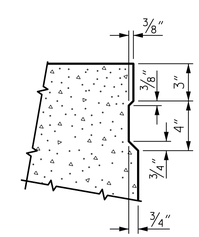

SHEAR KEY DETAIL

NOTE: OMIT SHEAR KEY ON OUTSIDE FACE OF EXTERIOR CORED SLABS.

PROJECT NO. 17BP.3.R.59
SAMPSON COUNTY
STATION: 18+77.00 -L-

SHEET 1 OF 5

STATE OF NORTH CAROLINA
DEPARTMENT OF TRANSPORTATION
RALEIGH

3'-0" X 1'-9" PRESTRESSED CONCRETE CORED SLAB UNIT 90° SKEW SPANS A & B

DOCUMENT NOT CONSIDERED FINAL UNLESS ALL SIGNATURES COMPLETED

CDM Smith
CDM SMITH
5400 Glenwood Avenue, Suite 400
Raleigh, NC 27612-3228
NC COA No. F-1255

DRAWN BY :	VDK	DATE :	2/18
CHECKED BY :	THF	DATE :	2/18
DESIGN ENGINEER :	VDK	DATE :	2/18

DWG. No.

NORTH CAROLINA PROFESSIONAL SEAL 016301 ENGINEER TING H FANG
4/24/2018

REVISIONS						
NO.	BY:	DATE:	NO.	BY:	DATE:	
1			3			
2			4			

SHEET NO. S-06
TOTAL SHEETS 19

STD. NO. 21" PCS2_33_90S

FILE: c:\pw_pll\longfh\d0938833\401_011_17BP3R59_SMU_CS1_006_810232.dgn
DATE: 4/22/18 11:08:18 PM

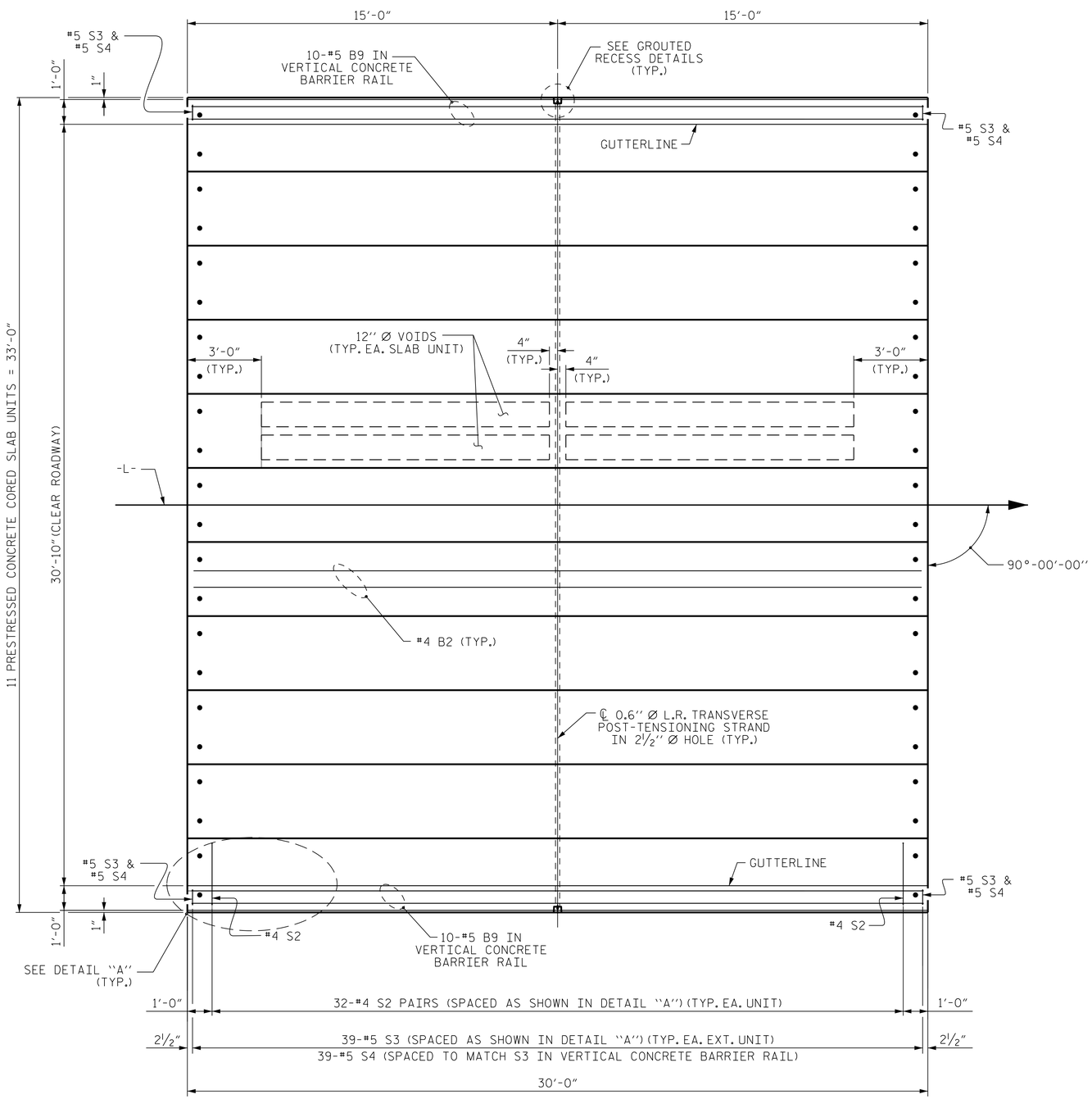

PLAN OF SPAN A

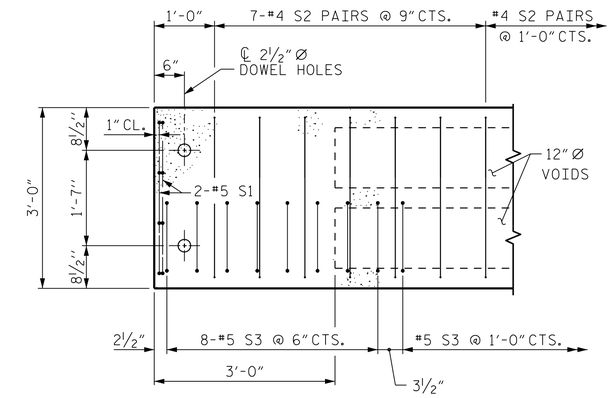

DETAIL "A"

(TYPICAL EACH END OF UNIT)
NOTE: EXTERIOR UNIT SHOWN - INTERIOR UNIT SIMILAR EXCEPT OMIT #5 S3 BARS.

PROJECT NO. 17BP.3.R.59
SAMPSON COUNTY
STATION: 18+77.00 -L-

SHEET 2 OF 5

DOCUMENT NOT CONSIDERED FINAL UNLESS ALL SIGNATURES COMPLETED

CDM Smith
CDM SMITH
5400 Glenwood Avenue, Suite 400
Raleigh, NC 27612-3228
NC COA No. F-1255

DRAWN BY : VDK DATE : 2/18
CHECKED BY : THF DATE : 2/18
DESIGN ENGINEER : VDK DATE : 2/18

DWG. No.

NORTH CAROLINA PROFESSIONAL SEAL 016301 ENGINEER TING H FANG
4/24/2018

STATE OF NORTH CAROLINA
DEPARTMENT OF TRANSPORTATION
RALEIGH

PLAN OF 30' UNIT
30'-10" CLEAR ROADWAY
90° SKEW

SPAN A

REVISIONS						SHEET NO.
NO.	BY:	DATE:	NO.	BY:	DATE:	S-07
1			3			TOTAL SHEETS
2			4			19

FILE: c:\pw_pll\langth\d0938835\401_013_17BP3R59_SMU_CS2_007_810232.dgn
DATE: 4/2/2018 11:08:26 PM

STD. NO. 21" PCS_33_90S_30L

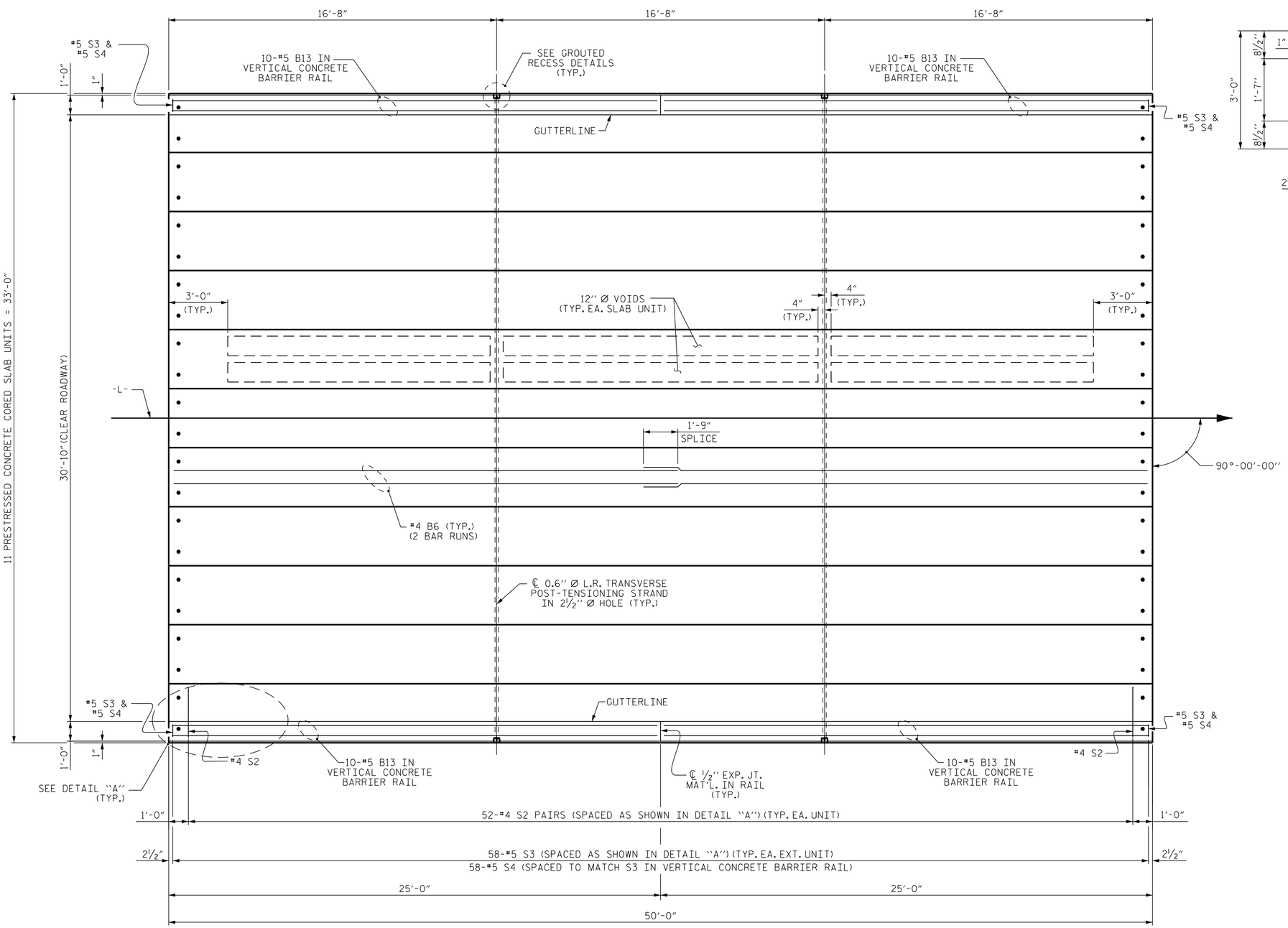

PLAN OF SPAN B

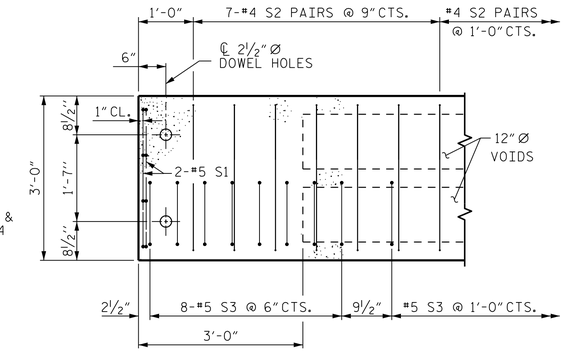

DETAIL "A"

(TYPICAL EACH END OF UNIT)
NOTE: EXTERIOR UNIT SHOWN - INTERIOR UNIT SIMILAR EXCEPT OMIT #5 S3 BARS.

PROJECT NO. 17BP.3.R.59
SAMPSON COUNTY
STATION: 18+77.00 -L-

SHEET 3 OF 5

STATE OF NORTH CAROLINA
DEPARTMENT OF TRANSPORTATION
RALEIGH

PLAN OF 50' UNIT 30'-10" CLEAR ROADWAY 90° SKEW

SPAN B

DOCUMENT NOT CONSIDERED FINAL UNLESS ALL SIGNATURES COMPLETED

CDM Smith
CDM SMITH
5400 Glenwood Avenue, Suite 400
Raleigh, NC 27612-3228
NC COA No. F-1255

DRAWN BY :	VDK	DATE :	2/18
CHECKED BY :	THF	DATE :	2/18
DESIGN ENGINEER :	VDK	DATE :	2/18

DWG. No.

NORTH CAROLINA PROFESSIONAL SEAL 016301 ENGINEER TING H FANG
4/24/2018

REVISIONS						SHEET NO.
NO.	BY:	DATE:	NO.	BY:	DATE:	S-08
1			3			TOTAL SHEETS
2			4			19

STD. NO. 21" PCS_33_90S_50L

FILE: c:\pw_pll\length\d0938835\401_015_17BP.2.R.59_SMU_CS3_008_810252.dgn
DATE: 4/23/18 11:08:34 PM

CONCRETE RELEASE STRENGTH

UNIT	PSI
SPAN A (30′ UNITS)	4000
SPAN B (50′ UNITS)	4900

DEAD LOAD DEFLECTION AND CAMBER

ALL UNITS, 0.6″ Ø L.R. STRAND	SPAN A 30′ - 21″CS UNIT	SPAN B 50′ - 21″CS UNIT
CAMBER (SLAB ALONE IN PLACE)	¼″ ↑	1½″↑
DEFLECTION DUE TO SUPERIMPOSED DEAD LOAD ✱✱	⅛″ ↓	⅜″ ↓
FINAL CAMBER	⅛″ ↑	1⅛″↑

✱✱ INCLUDES FUTURE WEARING SURFACE

GRADE 270 STRANDS

	0.6″ Ø L.R.
AREA (SQUARE INCHES)	0.217
ULTIMATE STRENGTH (LBS. PER STRAND)	58,600
APPLIED PRESTRESS (LBS. PER STRAND)	43,950

CORED SLABS REQUIRED

SPAN A (30′ UNITS)

	NUMBER	LENGTH	TOTAL LENGTH
EXTERIOR C.S.	2	30′-0″	60′-0″
INTERIOR C.S.	9	30′-0″	270′-0″
TOTAL	11	30′-0″	330′-0″

SPAN B (50′ UNITS)

	NUMBER	LENGTH	TOTAL LENGTH
EXTERIOR C.S.	2	50′-0″	100′-0″
INTERIOR C.S.	9	50′-0″	450′-0″
TOTAL	11	50′-0″	550′-0″

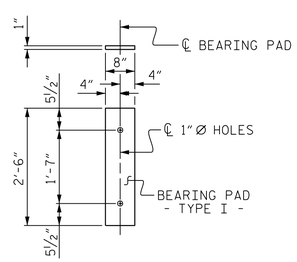

FIXED END
(TYPE I - 44 REQ'D)

ELASTOMERIC BEARING DETAILS

ELASTOMER IN ALL BEARINGS SHALL BE 50 DUROMETER HARDNESS.

BAR TYPES

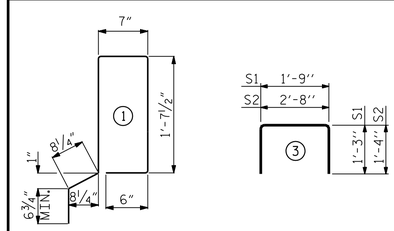

ALL BAR DIMENSIONS ARE OUT TO OUT

BILL OF MATERIAL FOR ONE CORED SLAB UNIT

SPAN A (30′ - 21″CORED SLAB UNIT)

				EXTERIOR UNIT		INTERIOR UNIT	
BAR	NUMBER	SIZE	TYPE	LENGTH	WEIGHT	LENGTH	WEIGHT
B2	2	#4	STR	29′-8″	40	29′-8″	40
S1	8	#5	3	4′-3″	35	4′-3″	35
S2	64	#4	3	5′-4″	228	5′-4″	228
✱ S3	39	#5	1	5′-7″	227		
REINFORCING STEEL			LBS.		303		303
✱ EPOXY COATED REINFORCING STEEL			LBS.		227		
5000 P.S.I. CONCRETE			CU. YDS.		4.4		4.4
0.6″ Ø L.R. STRANDS			No.		9		9

SPAN B (50′ - 21″CORED SLAB UNIT)

				EXTERIOR UNIT		INTERIOR UNIT	
BAR	NUMBER	SIZE	TYPE	LENGTH	WEIGHT	LENGTH	WEIGHT
B6	4	#4	STR	25′-9″	69	25′-9″	69
S1	8	#5	3	4′-3″	35	4′-3″	35
S2	104	#4	3	5′-4″	371	5′-4″	371
✱ S3	58	#5	1	5′-7″	338		
REINFORCING STEEL			LBS.		475		475
✱ EPOXY COATED REINFORCING STEEL			LBS.		338		
6500 P.S.I. CONCRETE			CU. YDS.		7.1		7.1
0.6″ Ø L.R. STRANDS			No.		19		19

NOTES

ALL PRESTRESSING STRANDS SHALL BE 7-WIRE LOW RELAXATION GRADE 270 STRANDS AND SHALL CONFORM TO AASHTO M203 EXCEPT FOR SAMPLING REQUIREMENTS WHICH SHALL BE IN ACCORDANCE WITH THE STANDARD SPECIFICATIONS.

ALL REINFORCING STEEL CAST WITH THE CORED SLAB SECTIONS SHALL BE GRADE 60 AND SHALL BE INCLUDED IN THE UNIT PRICE BID FOR PRESTRESSED CONCRETE CORED SLABS.

RECESSES FOR TRANSVERSE STRANDS SHALL BE GROUTED AFTER THE TENSIONING OF THE STRANDS.

THE 2½″Ø DOWEL HOLES AT FIXED ENDS OF SLAB SECTIONS SHALL BE FILLED WITH NON-SHRINK GROUT.

THE BACKER RODS SHALL CONFORM TO THE REQUIREMENTS OF TYPE M BOND BREAKER. SEE SECTION 1028 OF THE STANDARD SPECIFICATIONS.

WHEN CORED SLABS ARE CAST, AN INTERNAL HOLD-DOWN SYSTEM SHALL BE EMPLOYED TO PREVENT VOIDS FROM RISING OR MOVING SIDEWAYS. AT LEAST SIX WEEKS PRIOR TO CASTING CORED SLABS, THE CONTRACTOR SHALL SUBMIT TO THE ENGINEER FOR REVIEW AND COMMENT, DETAILED DRAWINGS OF THE PROPOSED HOLD-DOWN SYSTEM. IN ADDITION TO STRUCTURAL DETAILS, LOCATION AND SPACING OF THE HOLD-DOWNS SHALL BE INDICATED.

ALL REINFORCING STEEL IN THE VERTICAL CONCRETE BARRIER RAIL SHALL BE EPOXY COATED.

PRESTRESSING STRANDS SHALL BE CUT FLUSH WITH THE CORED SLAB UNIT ENDS.

APPLY EPOXY PROTECTIVE COATING TO CORED SLAB UNIT ENDS.

GROOVED CONTRACTION JOINTS, ½″ IN DEPTH, SHALL BE TOOLED IN ALL EXPOSED FACES OF THE BARRIER RAIL AND IN ACCORDANCE WITH ARTICLE 825-10(B) OF THE STANDARD SPECIFICATIONS. A CONTRACTION JOINT SHALL BE LOCATED AT EACH THIRD POINT BETWEEN BARRIER RAIL EXPANSION JOINTS. ONLY ONE CONTRACTION JOINT IS REQUIRED AT MIDPOINT OF BARRIER RAIL SEGMENTS LESS THAN 20 FEET IN LENGTH AND NO CONTRACTION JOINTS ARE REQUIRED FOR THOSE SEGMENTS LESS THAN 10 FEET IN LENGTH.

FLAME CUTTING OF THE TRANSVERSE POST-TENSIONING STRAND IS NOT ALLOWED.

THE TRANSFER OF LOAD FROM THE ANCHORAGES TO THE CORED SLAB UNIT SHALL BE DONE WHEN THE CONCRETE HAS REACHED A COMPRESSIVE STRENGTH OF NOT LESS THAN THE REQUIRED STRENGTH SHOWN IN THE "CONCRETE RELEASE STRENGTH" TABLE.

FOR GROUT FOR STRUCTURES, SEE SPECIAL PROVISIONS.

THE PERMITTED THREADED INSERTS ARE DETAILED AS AN OPTION FOR THE CONTRACTOR TO ATTACH FALSEWORK AND FORMWORK DURING CONSTRUCTION.

THE PERMITTED THREADED INSERTS IN THE EXTERIOR UNITS SHALL BE SIZED BY THE CONTRACTOR, SPACED AT 4′-0″CENTERS AND GALVANIZED IN ACCORDANCE WITH SECTION 1076 OF THE STANDARD SPECIFICATIONS. STAINLESS STEEL THREADED INSERTS MAY BE USED AS AN ALTERNATE.

THE PERMITTED THREADED INSERTS SHALL BE GROUTED BY THE CONTRACTOR IMMEDIATELY FOLLOWING REMOVAL OF THE FALSEWORK.

THE COST OF THE PERMITTED THREADED INSERTS SHALL BE INCLUDED IN THE PRICE BID FOR THE PRECAST UNITS.

PROJECT NO. 17BP.3.R.59
SAMPSON COUNTY
STATION: 18+77.00 -L-

SHEET 4 OF 5

DOCUMENT NOT CONSIDERED FINAL UNLESS ALL SIGNATURES COMPLETED

CDM Smith
CDM SMITH
5400 Glenwood Avenue, Suite 400
Raleigh, NC 27612-3228
NC COA No. F-1255

DRAWN BY : VDK DATE : 2/18
CHECKED BY : THF DATE : 2/18
DESIGN ENGINEER : VDK DATE : 2/18

DWG. No.

NORTH CAROLINA PROFESSIONAL SEAL 016301 ENGINEER TING H FANG
4/24/2018

STATE OF NORTH CAROLINA
DEPARTMENT OF TRANSPORTATION
RALEIGH

3′-0″ x 1′-9″
PRESTRESSED CONCRETE
CORED SLAB UNIT
90° SKEW
SPANS A & B

REVISIONS						SHEET NO.
NO.	BY:	DATE:	NO.	BY:	DATE:	S-09
1			3			TOTAL SHEETS
2			4			19

FILE: c:\pw_pll\angth\d0938835\40_017_17BP3R59_SAU_CS4_009_810232.dgn
DATE: 4/2/2018 11:28:42 PM

STD. NO. 21″ BOM INFO_33_90S

BILL OF MATERIAL FOR VERTICAL CONCRETE BARRIER RAIL

BAR	BARS PER PAIR OF EXTERIOR UNITS	TOTAL NO.	SIZE	TYPE	LENGTH	WEIGHT
	SPAN A (30' UNIT)					
✳ B9	20	20	#5	STR	29'-7"	617
✳ S4	78	78	#5	2	7'-2"	583
✳ EPOXY COATED REINFORCING STEEL				LBS.		1200
CLASS AA CONCRETE				CU.YDS.		7.7
TOTAL VERTICAL CONCRETE BARRIER RAIL				LN. FT.		60.125
	SPAN B (50' UNIT)					
✳ B13	40	40	#5	STR	24'-7"	1026
✳ S4	116	116	#5	2	7'-2"	867
✳ EPOXY COATED REINFORCING STEEL				LBS.		1893
CLASS AA CONCRETE				CU.YDS.		12.8
TOTAL VERTICAL CONCRETE BARRIER RAIL				LN. FT.		100.125

TOTAL VERTICAL CONCRETE BARRIER RAIL FOR ENTIRE BRIDGE: 160.25 LN.FT.

BAR TYPE

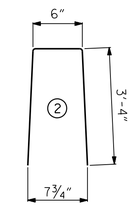

ALL BAR DIMENSIONS ARE OUT TO OUT

GUTTERLINE ASPHALT THICKNESS & RAIL HEIGHT

	ASPHALT OVERLAY THICKNESS @ MID-SPAN	RAIL HEIGHT @ MID-SPAN
SPAN A (30' UNITS)	2⅝"	3'-8⅝"
SPAN B (50' UNITS)	1⅝"	3'-7⅝"

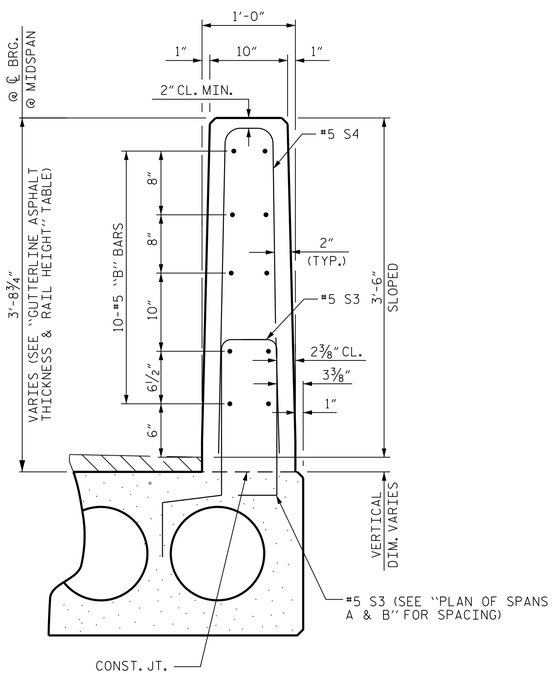

VERTICAL CONCRETE BARRIER RAIL SECTION

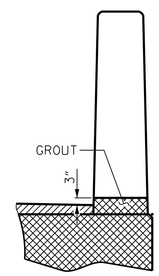

SECTION T-T
AT OPEN JOINT AT BENT
(THIS IS TO BE USED WHERE FOAM JOINT IS NOT USED)

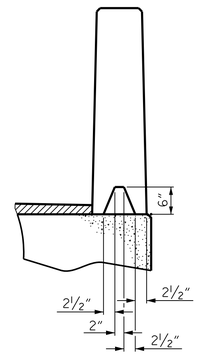

SECTION S-S
AT DAM IN OPEN JOINT
(THIS IS TO BE USED ONLY WHEN SLIP FORM IS USED)

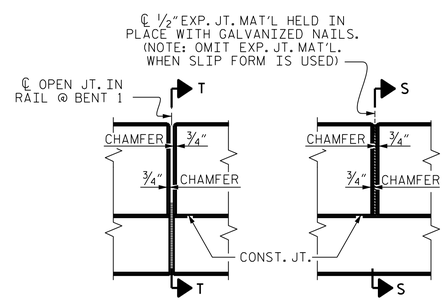

ELEVATION AT EXPANSION JOINTS

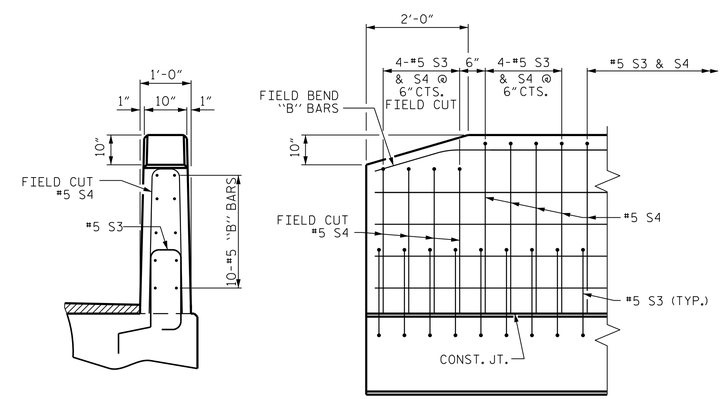

END VIEW

SIDE VIEW

END OF RAIL DETAILS

PROJECT NO. 17BP.3.R.59
SAMPSON COUNTY
STATION: 18+77.00 -L-

SHEET 5 OF 5

STATE OF NORTH CAROLINA
DEPARTMENT OF TRANSPORTATION
RALEIGH

VERTICAL CONCRETE BARRIER RAIL DETAILS

DOCUMENT NOT CONSIDERED FINAL UNLESS ALL SIGNATURES COMPLETED

CDM Smith
CDM SMITH
5400 Glenwood Avenue, Suite 400
Raleigh, NC 27612-3228
NC COA No. F-1255

DRAWN BY : VDK DATE : 2/18
CHECKED BY : THF DATE : 2/18
DESIGN ENGINEER : VDK DATE : 2/18

DWG. No.

NORTH CAROLINA PROFESSIONAL SEAL 016301 ENGINEER TING H FANG
4/24/2018

REVISIONS						SHEET NO.
NO.	BY:	DATE:	NO.	BY:	DATE:	S-10
1			3			TOTAL SHEETS
2			4			19

FILE: c:\pw_pll\length\d0928835\d01_019_17BP2R59_SMU_CS5_010_810232.dgn
DATE: 4/2/2018 11:06:50 PM

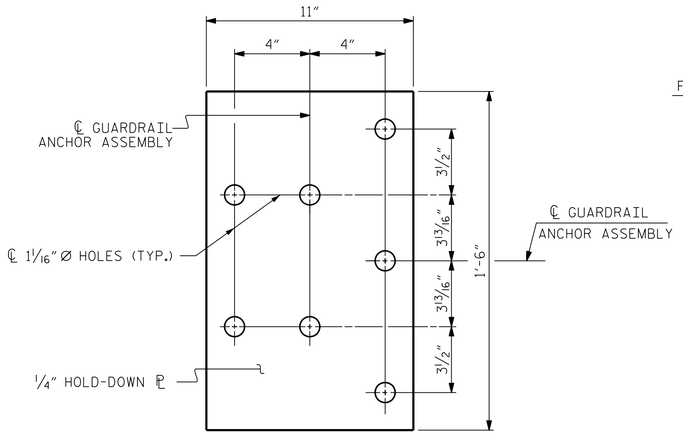

PLAN

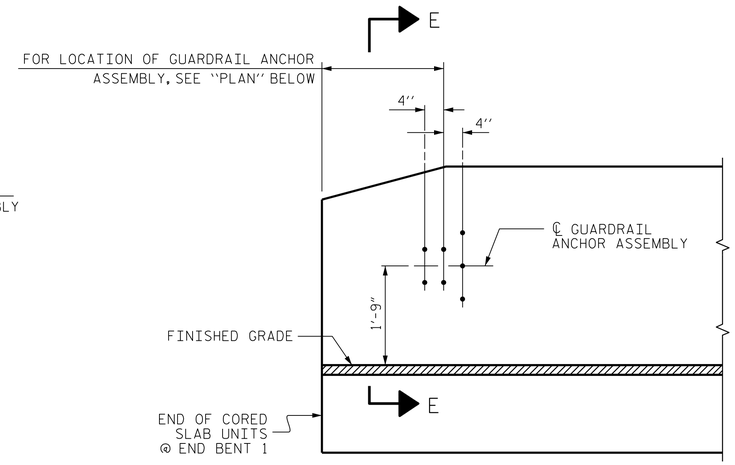

ELEVATION

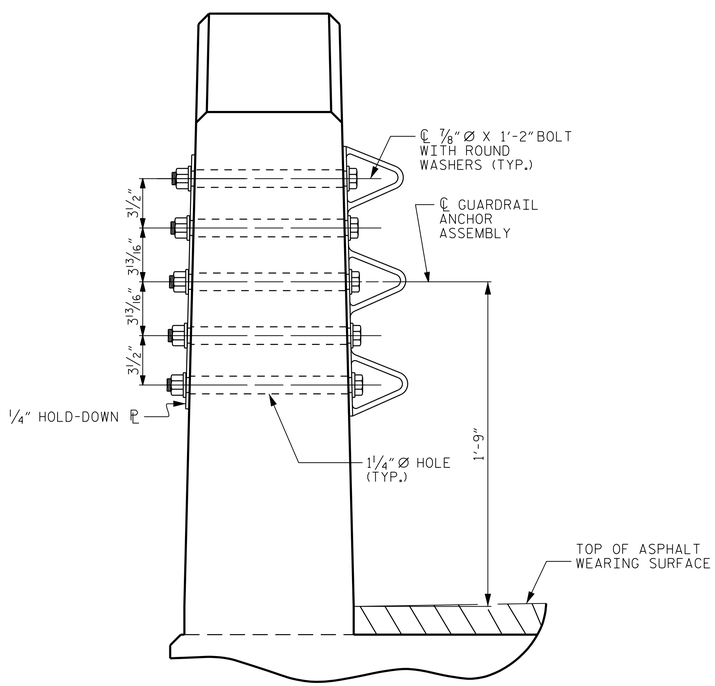

SECTION E-E

GUARDRAIL ANCHOR ASSEMBLY DETAILS

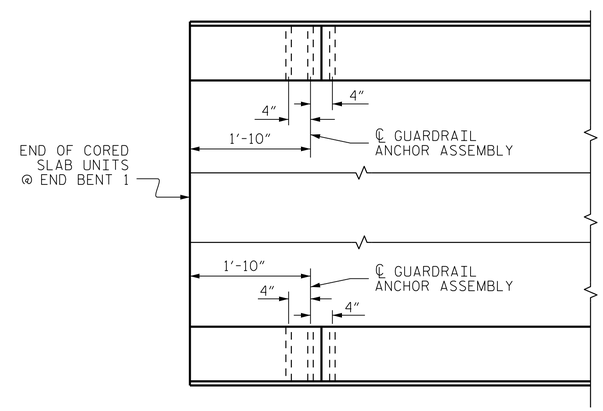

PLAN

LOCATION OF ANCHORS FOR GUARDRAIL

END BENT 1 SHOWN, END BENT 2 SIMILAR.

NOTES

THE GUARDRAIL ANCHOR ASSEMBLY SHALL CONSIST OF A 1/4" HOLD DOWN PLATE AND 7 - 7/8" Ø BOLTS WITH NUTS AND WASHERS.

THE HOLD-DOWN PLATE SHALL CONFORM TO AASHTO M270 GRADE 36. AFTER FABRICATION, THE HOLD-DOWN PLATE SHALL BE HOT-DIP GALVANIZED IN ACCORDANCE WITH AASHTO M111.

BOLTS SHALL CONFORM TO THE REQUIREMENTS OF ASTM A307 AND NUTS SHALL CONFORM TO THE REQUIREMENTS OF AASHTO M291. BOLTS, NUTS AND WASHERS SHALL BE GALVANIZED. (AT THE CONTRACTOR'S OPTION, STAINLESS STEEL BOLTS, NUTS AND WASHERS MAY BE USED AS AN ALTERNATE FOR THE 7/8" Ø GALVANIZED BOLTS, NUTS AND WASHERS. THEY SHALL CONFORM TO OR EXCEED THE MECHANICAL REQUIREMENTS OF ASTM A307. THE USE OF THIS ALTERNATE SHALL BE APPROVED BY THE ENGINEER.)

THE GUARDRAIL ANCHOR ASSEMBLY IS REQUIRED AT ALL POINTS WHERE APPROACH GUARDRAIL IS TO BE ATTACHED TO THE END OF BARRIER RAIL. FOR POINTS OF ATTACHMENT, SEE SKETCH.

AFTER INSTALLATION, THE EXPOSED THREAD OF THE BOLT SHALL BE BURRED WITH A SHARP POINTED TOOL.

THE COST OF THE GUARDRAIL ANCHOR ASSEMBLY SHALL BE INCLUDED IN THE UNIT CONTRACT PRICE BID FOR VERTICAL CONCRETE BARRIER RAIL.

THE VERTICAL REINFORCING BARS MAY BE SHIFTED SLIGHTLY IN THE VERTICAL CONCRETE BARRIER RAIL TO CLEAR ASSEMBLY BOLTS.

THE 1 1/4" Ø HOLES SHALL BE FORMED OR DRILLED WITH A CORE BIT. IMPACT TOOLS WILL NOT BE PERMITTED. ANY CONCRETE DAMAGED BY THIS WORK SHALL BE REPAIRED TO THE SATISFACTION OF THE ENGINEER.

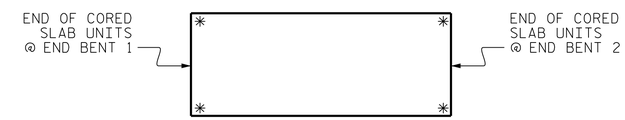

SKETCH SHOWING POINTS OF ATTACHMENT

✳ DENOTES GUARDRAIL ANCHOR ASSEMBLY

PROJECT NO. 17BP.3.R.59
SAMPSON COUNTY
STATION: 18+77.00 -L-

DOCUMENT NOT CONSIDERED FINAL UNLESS ALL SIGNATURES COMPLETED

CDM Smith
CDM SMITH
5400 Glenwood Avenue, Suite 400
Raleigh, NC 27612-3228
NC COA No. F-1255

DRAWN BY : VDK DATE : 2/18
CHECKED BY : THF DATE : 2/18
DESIGN ENGINEER : VDK DATE : 2/18

DWG. No.

NORTH CAROLINA PROFESSIONAL SEAL 016301 ENGINEER TING H FANG
4/24/2018

STATE OF NORTH CAROLINA
DEPARTMENT OF TRANSPORTATION
RALEIGH
SUPERSTRUCTURE

STANDARD GUARDRAIL ANCHORAGE FOR VERTICAL CONCRETE BARRIER RAIL

REVISIONS								SHEET NO.
NO.	BY:	DATE:	NO.	BY:	DATE:			S-11
1			3					TOTAL SHEETS
2			4					19

FILE: c:\pw_pll\length\d0938535\401_021_17BP3R59_SMU_GR_011_810232.dgn
DATE: 4/22/18 11:08:38 PM

STD. NO. GRA3

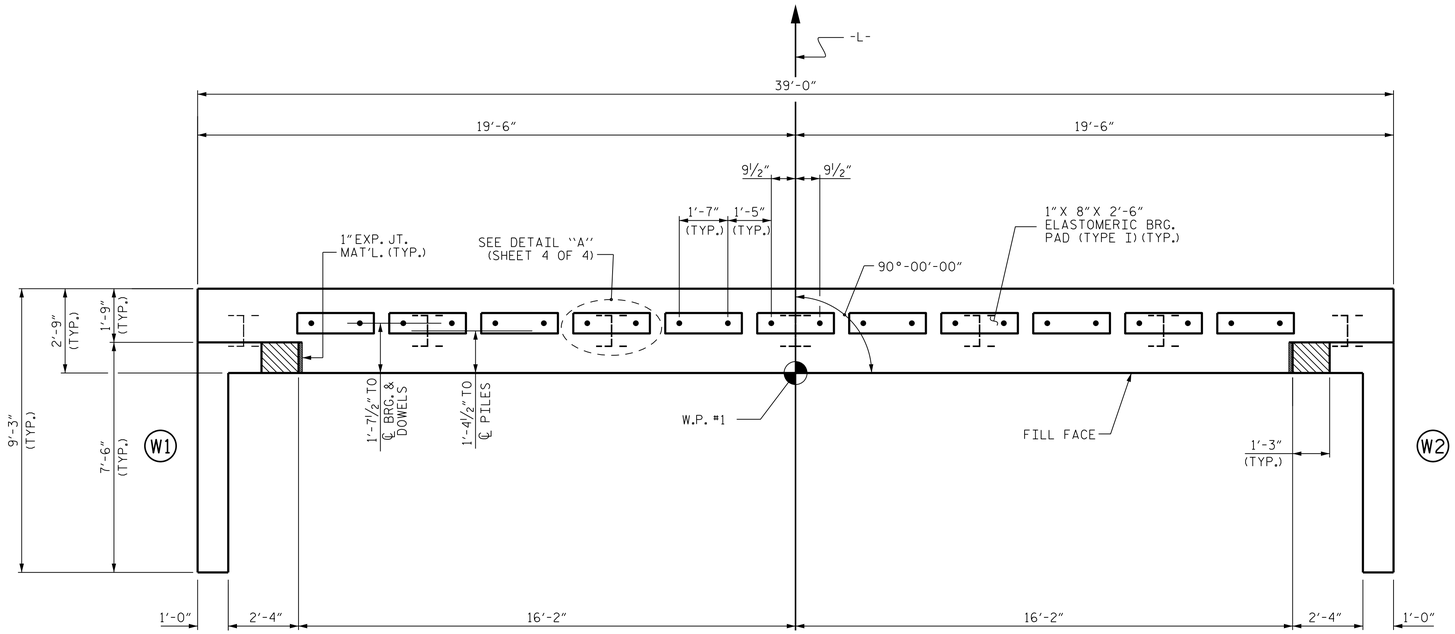

PLAN

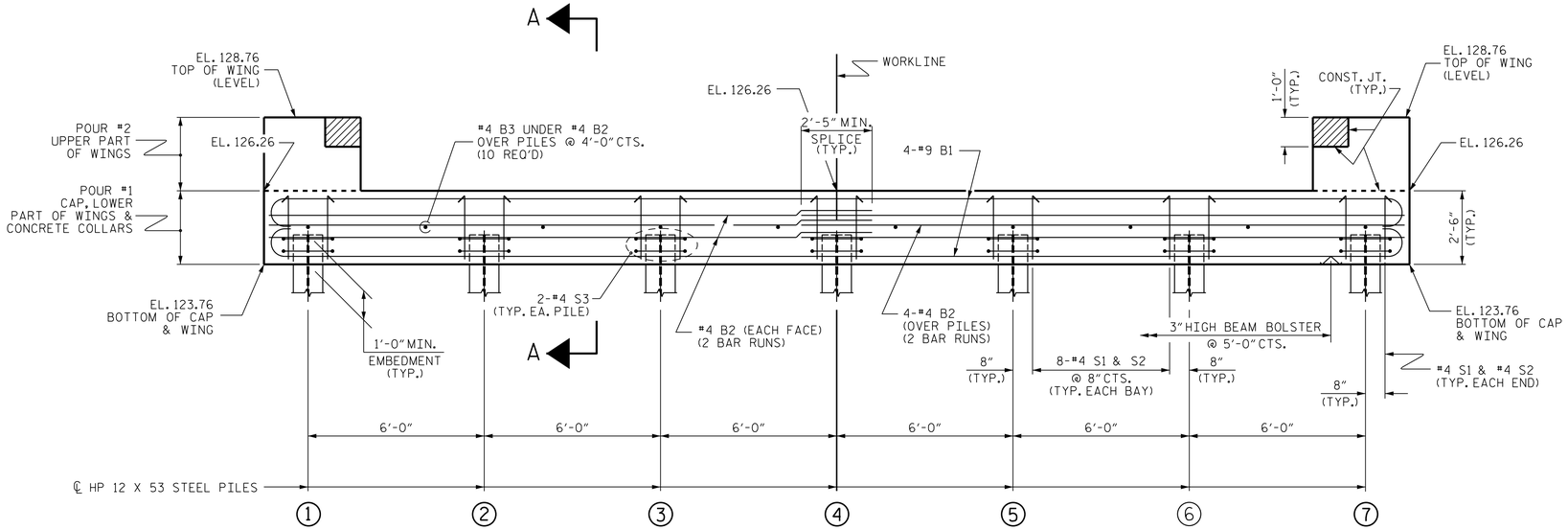

ELEVATION

WINGS NOT SHOWN FOR CLARITY.
FOR SECTION A-A, SEE SHEET 4 OF 4.
CONCRETE COLLARS FOR STEEL PILES NOT SHOWN IN PLAN AND ELEVATION VIEWS FOR CLARITY.
SEE "CORROSION PROTECTION FOR STEEL PILES DETAIL", SHEET 4 OF 4.

NOTES

STIRRUPS IN CAP MAY BE SHIFTED AS NECESSARY TO CLEAR DOWELS.

THE CONCRETE IN THE SHADED AREA OF THE WING SHALL BE POURED AFTER THE VERTICAL CONCRETE BARRIER RAIL IS CAST IF SLIP FORMING IS USED.

FOR PILE SPLICE DETAILS, SEE SHEET 4 OF 4.

FOR WING DETAILS, SEE SHEET 3 OF 4.

PROJECT NO. 17BP.3.R.59
SAMPSON COUNTY
STATION: 18+77.00 -L-

SHEET 1 OF 4

DOCUMENT NOT CONSIDERED FINAL UNLESS ALL SIGNATURES COMPLETED

CDM Smith
CDM SMITH
5400 Glenwood Avenue, Suite 400
Raleigh, NC 27612-3228
NC COA No. F-1255

DRAWN BY : VDK DATE : 2/18
CHECKED BY : THF DATE : 2/18
DESIGN ENGINEER : VDK DATE : 2/18

DWG. No.

NORTH CAROLINA PROFESSIONAL SEAL 016301 ENGINEER TING H FANG
4/24/2018

STATE OF NORTH CAROLINA
DEPARTMENT OF TRANSPORTATION
RALEIGH

SUBSTRUCTURE

END BENT 1

REVISIONS						SHEET NO.
NO.	BY:	DATE:	NO.	BY:	DATE:	S-12
1			3			TOTAL SHEETS
2			4			19

STD. NO. EB_33_90S

FILE: c:\pw_pll\angth\d0938535\401_023_17BP3R59_SAU_E1_012_810232.dgn
DATE: 4/22/18 11:09:06 PM

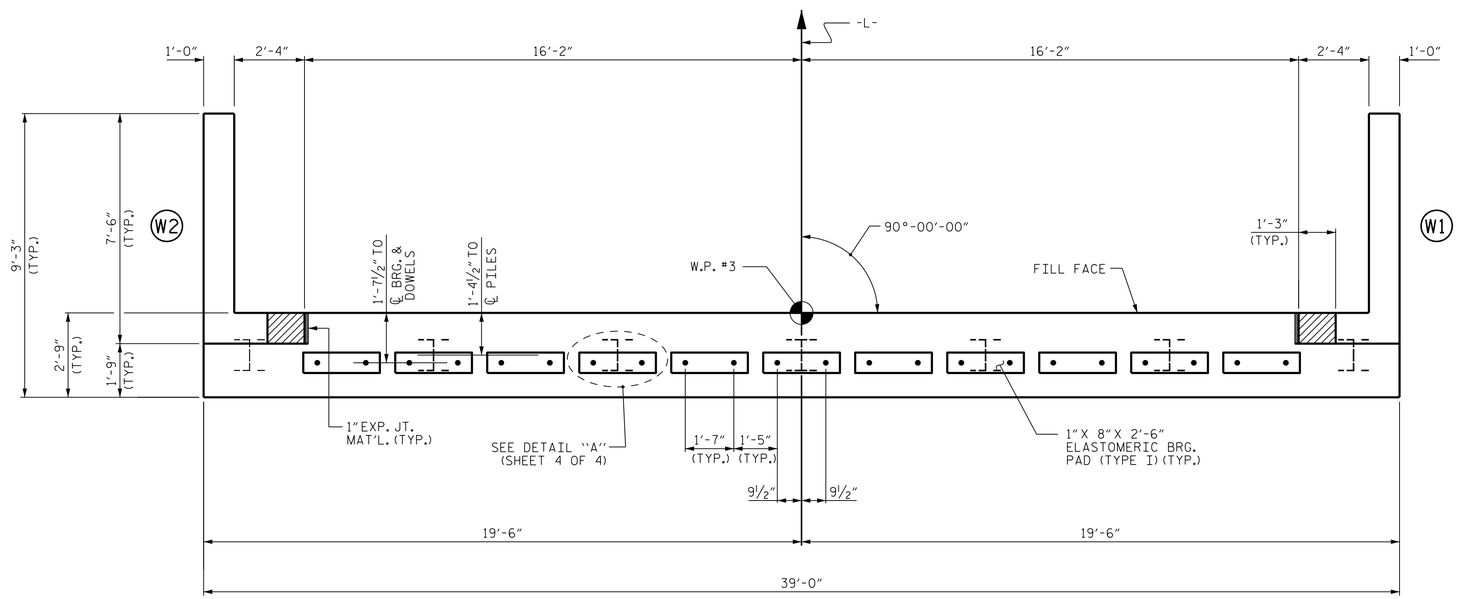

PLAN

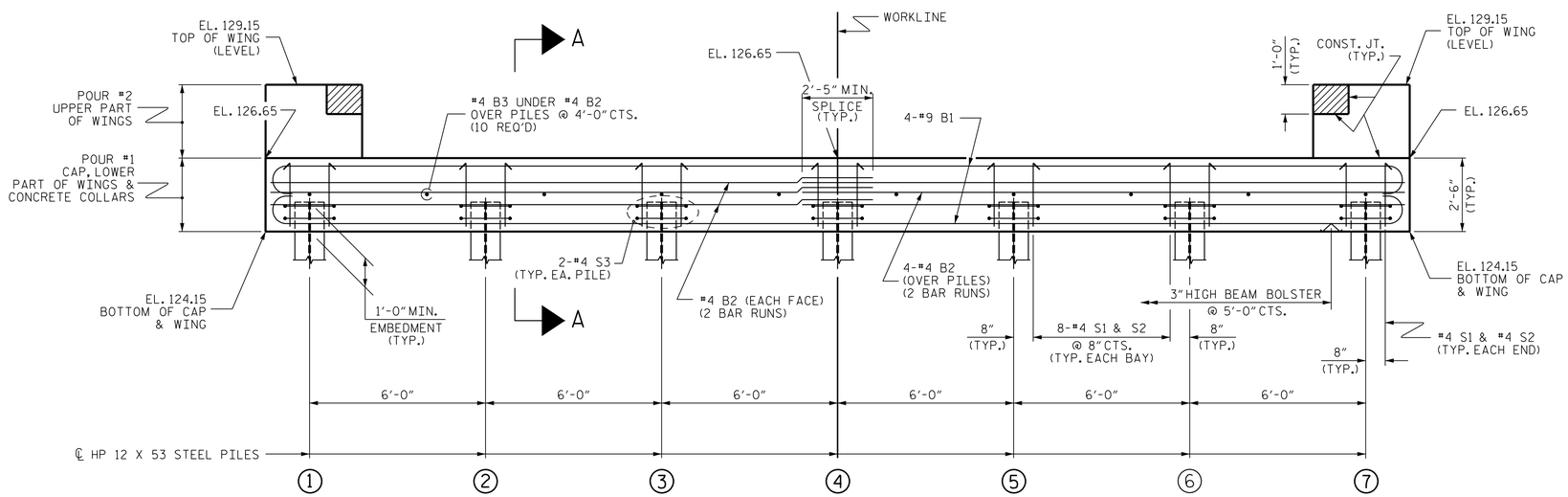

ELEVATION

WINGS NOT SHOWN FOR CLARITY.
FOR SECTION A-A, SEE SHEET 4 OF 4.
CONCRETE COLLARS FOR STEEL PILES NOT SHOWN IN PLAN AND ELEVATION VIEWS FOR CLARITY.
SEE "CORROSION PROTECTION FOR STEEL PILES DETAIL", SHEET 4 OF 4.

NOTES

STIRRUPS IN CAP MAY BE SHIFTED AS NECESSARY TO CLEAR DOWELS.

THE CONCRETE IN THE SHADED AREA OF THE WING SHALL BE POURED AFTER THE VERTICAL CONCRETE BARRIER RAIL IS CAST IF SLIP FORMING IS USED.

FOR PILE SPLICE DETAILS, SEE SHEET 4 OF 4.

FOR WING DETAILS, SEE SHEET 3 OF 4.

PROJECT NO. 17BP.3.R.59
SAMPSON COUNTY
STATION: 18+77.00 -L-

SHEET 2 OF 4

STATE OF NORTH CAROLINA
DEPARTMENT OF TRANSPORTATION
RALEIGH

SUBSTRUCTURE

END BENT 2

DOCUMENT NOT CONSIDERED FINAL UNLESS ALL SIGNATURES COMPLETED

CDM Smith
CDM SMITH
5400 Glenwood Avenue, Suite 400
Raleigh, NC 27612-3228
NC COA No. F-1255

DRAWN BY : VDK DATE : 2/18
CHECKED BY : THF DATE : 2/18
DESIGN ENGINEER : VDK DATE : 2/18

DWG. No.

NORTH CAROLINA PROFESSIONAL SEAL 016301 ENGINEER TING H FANG
4/25/2018

REVISIONS						SHEET NO.
NO.	BY:	DATE:	NO.	BY:	DATE:	S-13
1			3			TOTAL SHEETS
2			4			19

STD. NO. EB_33_90S

FILE: c:\pw_pll\tangh\d0928835\401_025_17BP3R59_SMU_E2_013_010232.dgn
DATE: 4/25/2018 11:09:14 PM

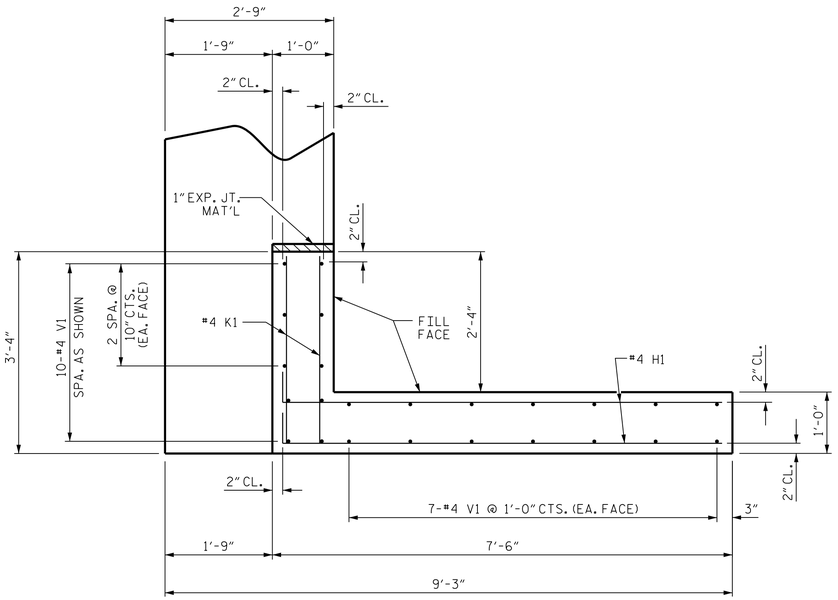

PLAN OF WING (W1)

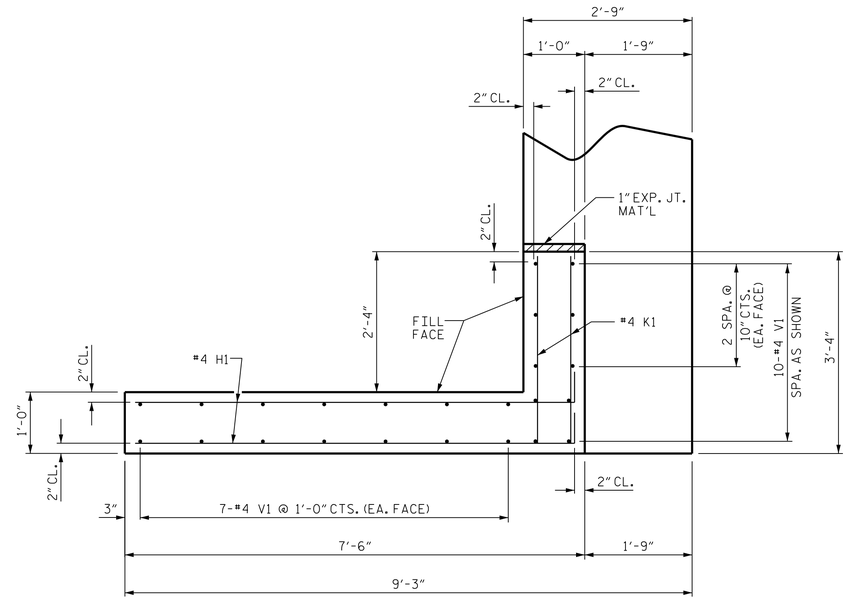

PLAN OF WING (W2)

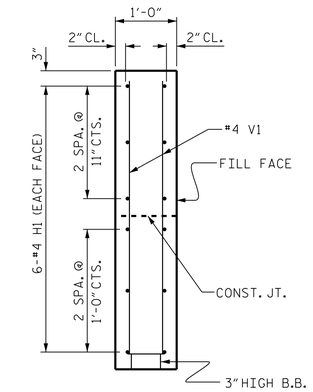

SECTION X-X

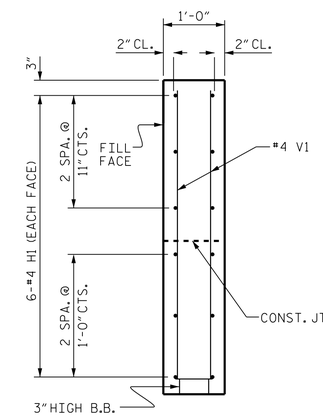

SECTION Y-Y

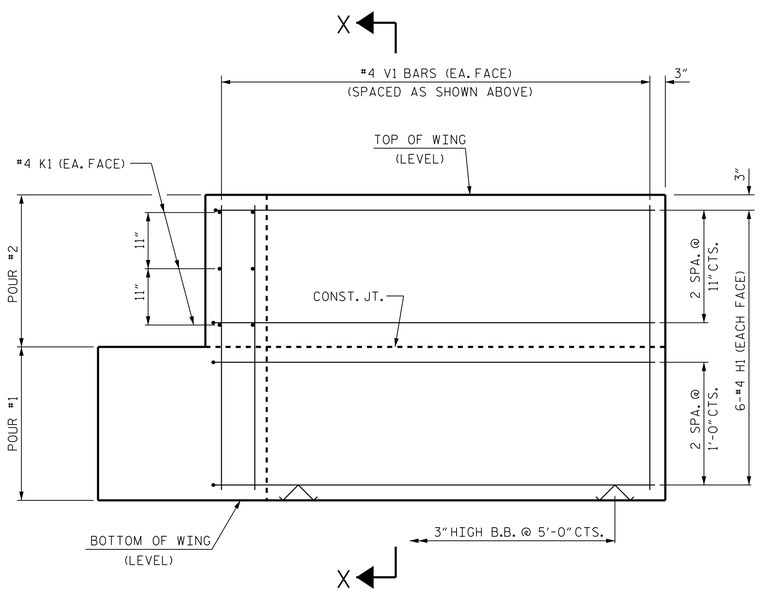

ELEVATION OF WING (W1)

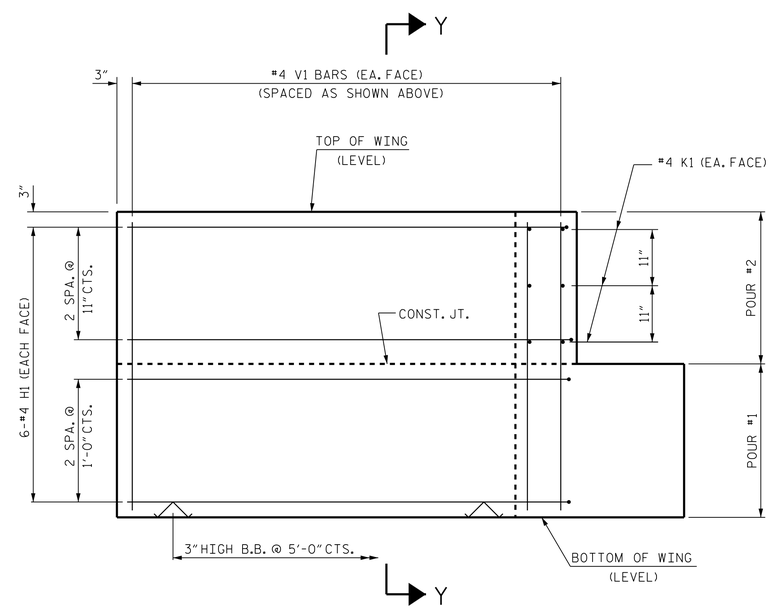

ELEVATION OF WING (W2)

WING DETAILS

PROJECT NO. 17BP.3.R.59
SAMPSON COUNTY
STATION: 18+77.00 -L-

SHEET 3 OF 4

STATE OF NORTH CAROLINA
DEPARTMENT OF TRANSPORTATION
RALEIGH

SUBSTRUCTURE

END BENTS 1 & 2
WING DETAILS

DOCUMENT NOT CONSIDERED FINAL UNLESS ALL SIGNATURES COMPLETED

CDM Smith
CDM SMITH
5400 Glenwood Avenue, Suite 400
Raleigh, NC 27612-3228
NC COA No. F-1255

DRAWN BY :	VDK	DATE :	2/18
CHECKED BY :	THF	DATE :	2/18
DESIGN ENGINEER :	VDK	DATE :	2/18

DWG. No.

NORTH CAROLINA PROFESSIONAL SEAL 016301 ENGINEER JING H FANG
4/25/2018

REVISIONS						SHEET NO.
NO.	BY:	DATE:	NO.	BY:	DATE:	S-14
1			3			TOTAL SHEETS
2			4			19

STD. NO. EB_33_90S

FILE: c:\pw_pll\angh\d0938835\d0_027_17BP3R59_SMU_E3_014_810232.dgn
DATE: 4/25/2018 11:09:21 PM

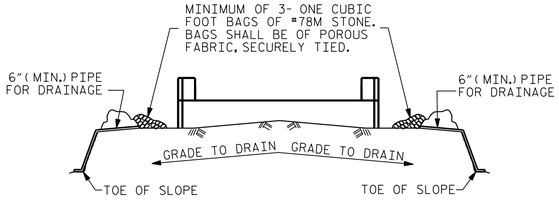

BAGGED STONE AND PIPE SHALL BE PLACED IMMEDIATELY AFTER COMPLETION OF END BENT EXCAVATION. PIPE MAY BE EITHER CONCRETE, CORRUGATED STEEL, CORRUGATED ALUMINUM ALLOY, OR CORRUGATED PLASTIC. PERFORATED PIPE WILL NOT BE ALLOWED.

BAGGED STONE SHALL REMAIN IN PLACE UNTIL THE ENGINEER DIRECTS THAT IT BE REMOVED. THE CONTRACTOR SHALL REMOVE AND DISPOSE OF SILT ACCUMULATIONS AT BAGGED STONE WHEN SO DIRECTED BY THE ENGINEER. BAGS SHALL BE REMOVED AND REPLACED WHENEVER THE ENGINEER DETERMINES THAT THEY HAVE DETERIORATED AND LOST THEIR EFFECTIVENESS.

NO SEPARATE PAYMENT WILL BE MADE FOR THIS WORK AND THE ENTIRE COST OF THIS WORK SHALL BE INCLUDED IN THE UNIT CONTRACT PRICE BID FOR THE SEVERAL PAY ITEMS.

TEMPORARY DRAINAGE AT END BENT

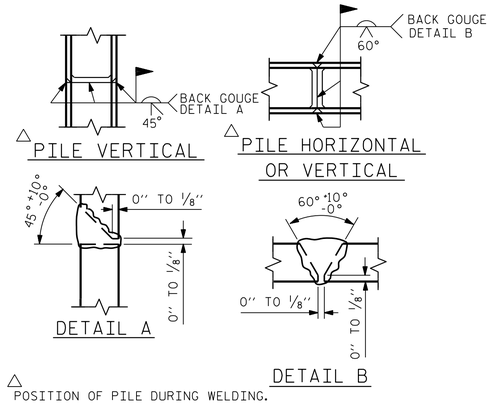

PILE SPLICE DETAILS

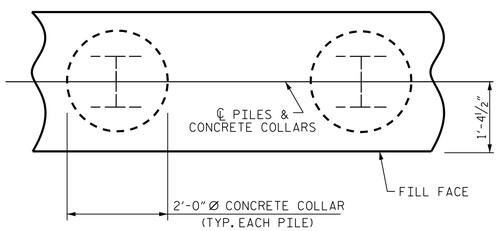

PLAN

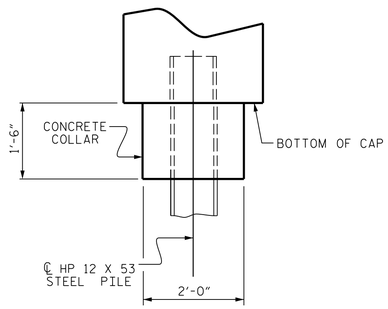

ELEVATION

CORROSION PROTECTION FOR STEEL PILES DETAIL

(END BENT 1 SHOWN, END BENT 2 SIMILAR BY ROTATION)

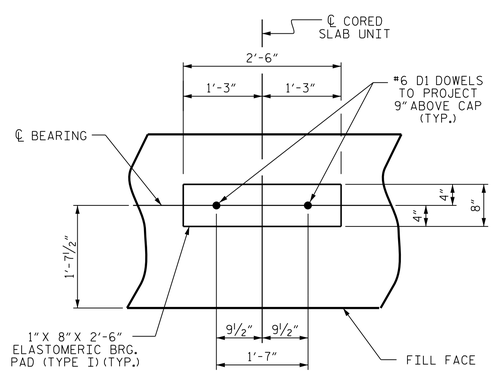

DETAIL "A"

(END BENT 1 SHOWN, END BENT 2 SIMILAR BY ROTATION)

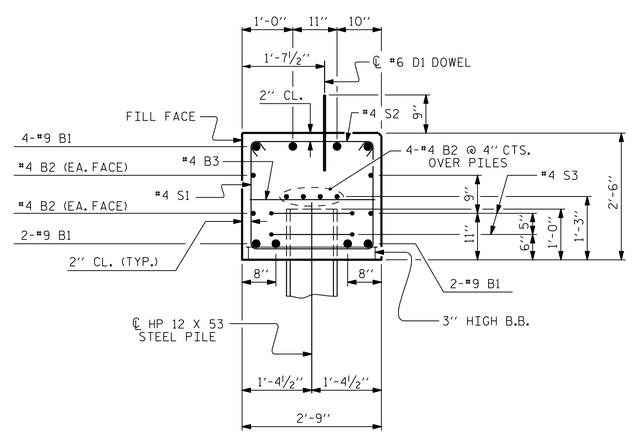

SECTION A-A

(CONCRETE COLLAR NOT SHOWN FOR CLARITY. SEE "CORROSION PROTECTION FOR STEEL PILES DETAIL.")

BAR TYPES

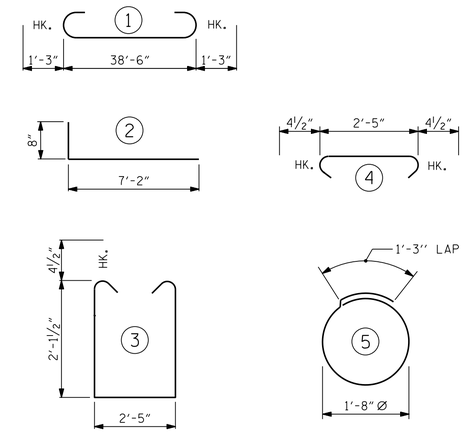

ALL BAR DIMENSIONS ARE OUT TO OUT.

END BENT 1		END BENT 2	
HP 12 X 53 STEEL PILES		HP 12 X 53 STEEL PILES	
NO: 7	LIN. FT.= 350	NO: 7	LIN. FT.= 420
PILE DRIVING EQUIP. SETUP	EA. 7	PILE DRIVING EQUIP. SETUP	EA. 7
PILE REDRIVES	EA. 4	PILE REDRIVES	EA. 4

BILL OF MATERIAL

FOR ONE END BENT

(2 REQUIRED)

BAR	NO.	SIZE	TYPE	LENGTH	WEIGHT
B1	8	#9	1	41'-0"	1115
B2	16	#4	STR	20'-7"	220
B3	10	#4	STR	2'-5"	16
D1	22	#6	STR	1'-6"	50
H1	24	#4	2	7'-10"	126
K1	12	#4	STR	2'-11"	23
S1	50	#4	3	7'-5"	248
S2	50	#4	4	3'-2"	106
S3	14	#4	5	6'-6"	61
V1	48	#4	STR	4'-8"	150
REINFORCING STEEL					2115 LBS.

CLASS A CONCRETE BREAKDOWN:

POUR #1	CAP, LOWER PART OF WINGS & COLLARS	12.4 C.Y.
POUR #2	UPPER PART OF WINGS	1.8 C.Y.
	TOTAL	14.2 C.Y.

PROJECT NO. 17BP.3.R.59
SAMPSON COUNTY
STATION: 18+77.00 -L-

SHEET 4 OF 4

STATE OF NORTH CAROLINA
DEPARTMENT OF TRANSPORTATION
RALEIGH

SUBSTRUCTURE

END BENTS 1 & 2 DETAILS

DOCUMENT NOT CONSIDERED FINAL UNLESS ALL SIGNATURES COMPLETED

CDM Smith
CDM SMITH
5400 Glenwood Avenue, Suite 400
Raleigh, NC 27612-3228
NC COA No. F-1255

DRAWN BY :	VDK	DATE :	2/18
CHECKED BY :	THF	DATE :	2/18
DESIGN ENGINEER :	VDK	DATE :	2/18

DWG. No.

NORTH CAROLINA PROFESSIONAL SEAL 016301 ENGINEER TING H FANG
4/25/2018

REVISIONS						SHEET NO.
NO.	BY:	DATE:	NO.	BY:	DATE:	S-15
1			3			TOTAL SHEETS
2			4			19

STD. NO. EB_33_90S

FILE: c:\pw_pll\length\d0928835\d01_029_17BP3R59_SAU_E4_015_810253.dgn
DATE: 4/25/2018 11:09:29 PM

NOTES

STIRRUPS IN CAP MAY BE SHIFTED AS NECESSARY TO CLEAR DOWELS.

★ INVERT ALTERNATE STIRRUPS.

GALVANIZE THE TOP OF EACH INTERIOR BENT PILE A MINIMUM OF 31 FEET. GALVANIZE IN ACCORDANCE WITH SECTION 1076 OF THE STANDARD SPECIFICATIONS.

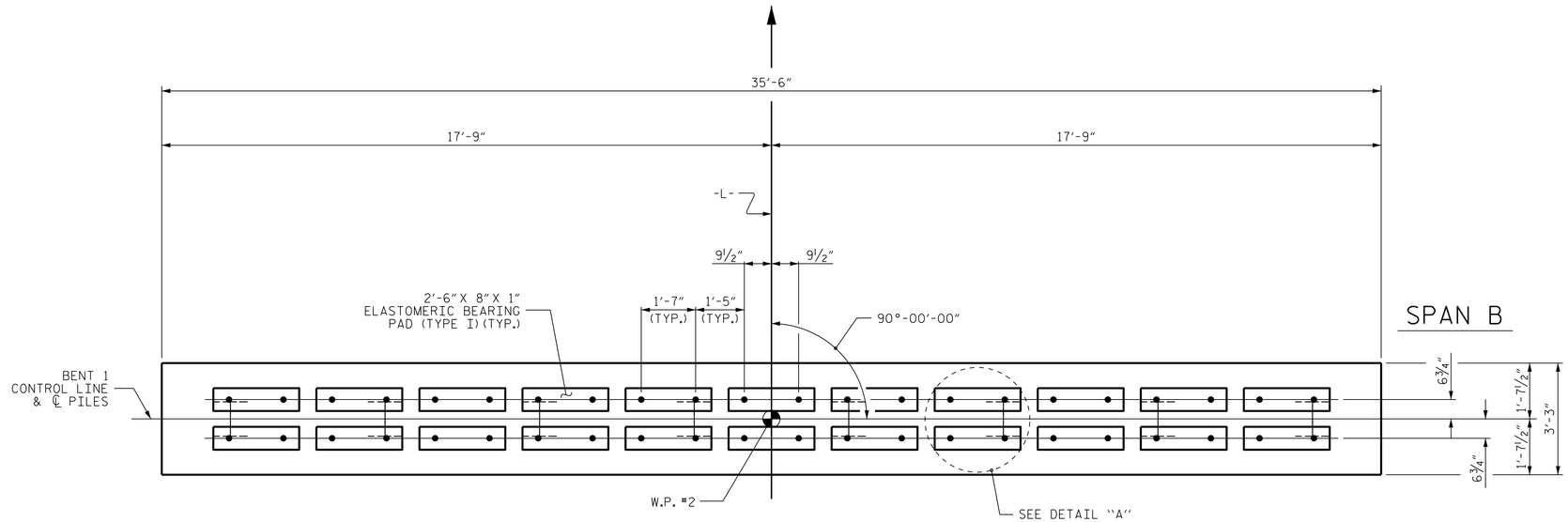

PLAN

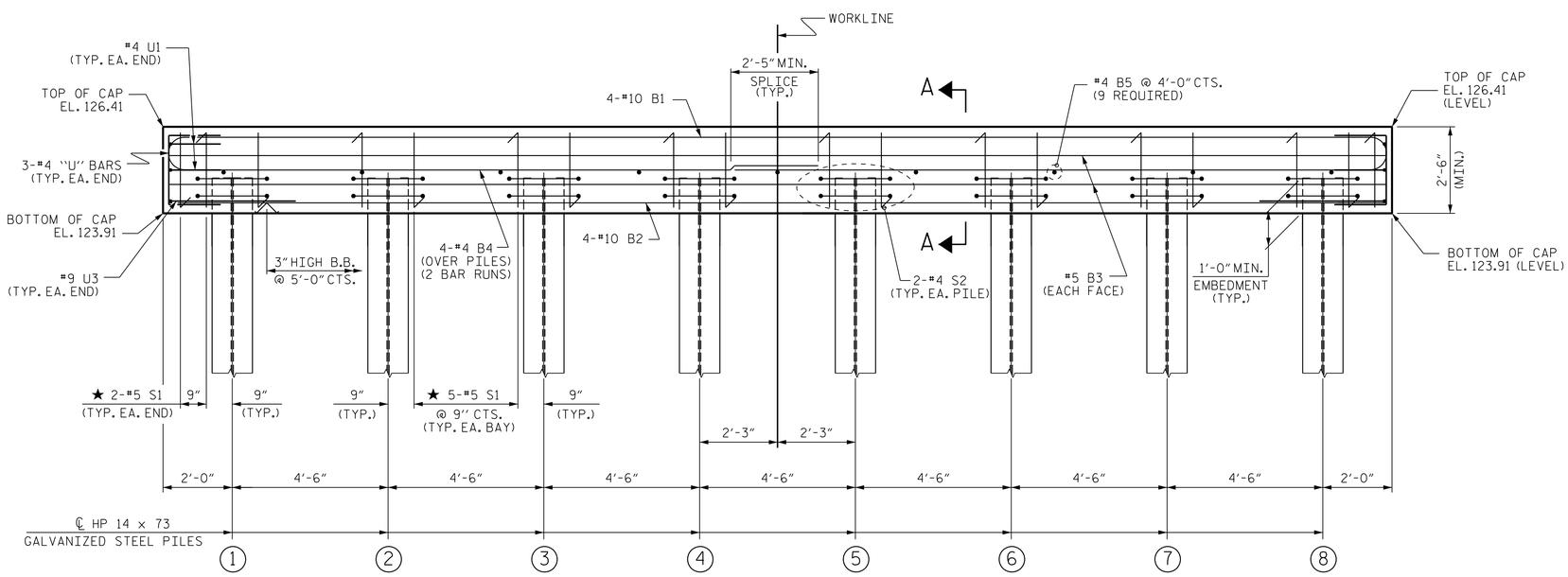

ELEVATION

FOR SECTION A-A, SEE SHEET 2 OF 2

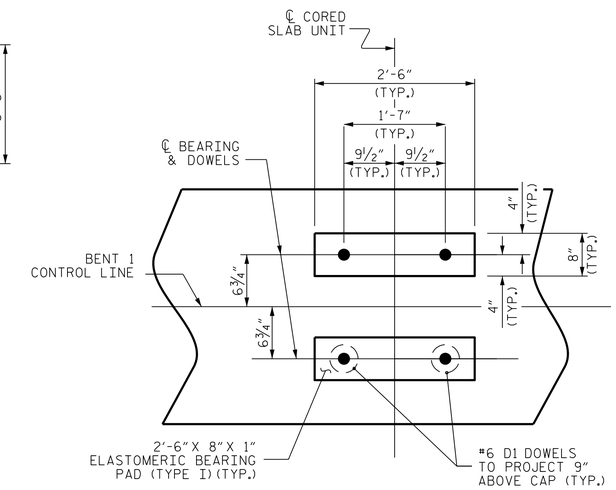

DETAIL "A"

(DIMENSIONS ARE TYPICAL EACH BEARING)

PROJECT NO. 17BP.3.R.59

SAMPSON COUNTY

STATION: 18+77.00 -L-

SHEET 1 OF 2

STATE OF NORTH CAROLINA
DEPARTMENT OF TRANSPORTATION
RALEIGH

SUBSTRUCTURE

BENT 1

DOCUMENT NOT CONSIDERED FINAL UNLESS ALL SIGNATURES COMPLETED

CDM Smith

CDM SMITH
5400 Glenwood Avenue, Suite 400
Raleigh, NC 27612-3228
NC COA No. F-1255

DRAWN BY :	VDK	DATE :	2/18
CHECKED BY :	THF	DATE :	2/18
DESIGN ENGINEER :	VDK	DATE :	2/18

DWG. No.

NORTH CAROLINA PROFESSIONAL SEAL 016301 ENGINEER TING H FANG
4/25/2018

REVISIONS							
NO.	BY:	DATE:	NO.	BY:	DATE:	SHEET NO.	
1			3			S-16	
2			4			TOTAL SHEETS	
						19	

FILE: c:\pw_pll\length\d0938835\401_03_17BP3R59_SMU_B1_016_810232.dgn
DATE: 4/2/2018 11:09:37 PM

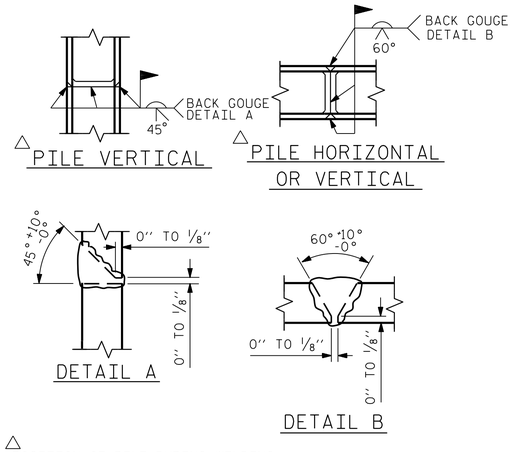

△ POSITION OF PILE DURING WELDING.

PILE SPLICE DETAILS

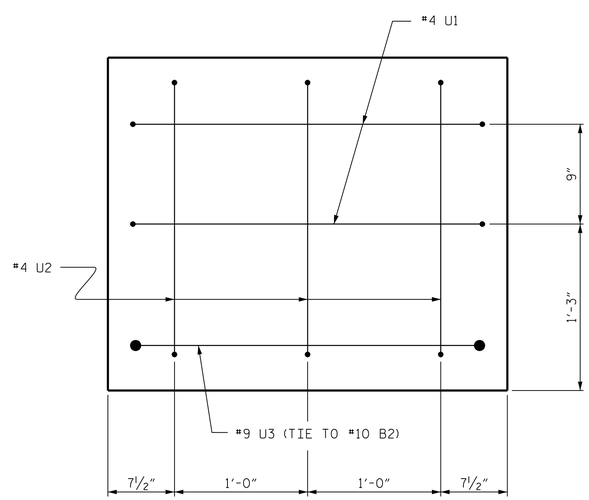

END OF CAP VIEW

(TYPICAL BOTH ENDS)

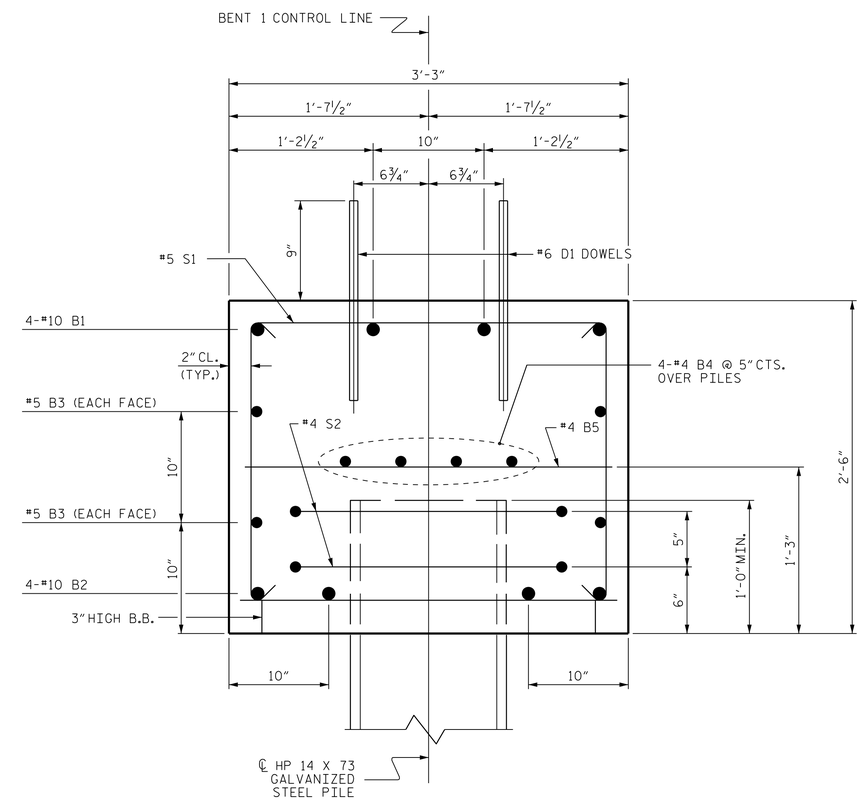

SECTION A-A

BAR TYPES

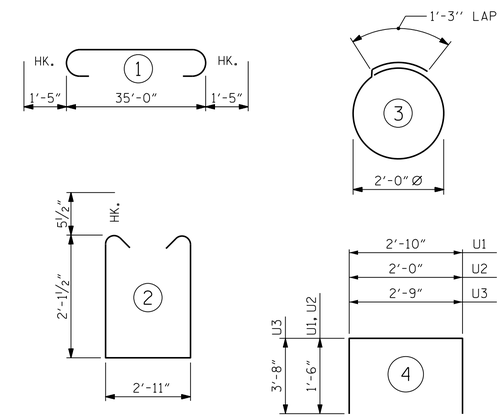

ALL BAR DIMENSIONS ARE OUT TO OUT.

BILL OF MATERIAL

BENT 1

BAR	NO.	SIZE	TYPE	LENGTH	WEIGHT
B1	4	#10	1	37'-10"	651
B2	4	#10	STR	35'-2"	605
B3	4	#5	STR	35'-2"	147
B4	8	#4	STR	18'-10"	101
B5	9	#4	STR	2'-11"	18
D1	44	#6	STR	1'-6"	99
S1	39	#5	2	8'-1"	329
S2	16	#4	3	7'-7"	81
U1	4	#4	4	5'-10"	16
U2	6	#4	4	5'-0"	20
U3	2	#9	4	10'-1"	69
REINFORCING STEEL					2136 LBS
TOTAL CLASS A CONCRETE					10.7 C.Y.

HP 14 X 73 GALVANIZED STEEL PILES

No. 8	LIN. FT.	520
PILE DRIVING EQUIPMENT SETUP	EA.	8
PILE REDRIVES	EA.	4

PROJECT NO. 17BP.3.R.59
SAMPSON COUNTY
STATION: 18+77.00 -L-

SHEET 2 OF 2

DOCUMENT NOT CONSIDERED FINAL UNLESS ALL SIGNATURES COMPLETED

CDM Smith
CDM SMITH
5400 Glenwood Avenue, Suite 400
Raleigh, NC 27612-3228
NC COA No. F-1255

DRAWN BY :	VDK	DATE :	2/18
CHECKED BY :	THF	DATE :	2/18
DESIGN ENGINEER :	VDK	DATE :	2/18

DWG. No.

NORTH CAROLINA PROFESSIONAL SEAL 016301 ENGINEER TING H FANG
4/25/2018

STATE OF NORTH CAROLINA
DEPARTMENT OF TRANSPORTATION
RALEIGH

SUBSTRUCTURE

BENT 1

REVISIONS								SHEET NO.
NO.	BY:	DATE:	NO.	BY:	DATE:			S-17
1			3					TOTAL SHEETS
2			4					19

FILE: c:\pw_pll\langth\d0923835\401.033.17BP3R59_SMU_B1_017_B10252.dgn
DATE: 4/25/2018 11:09:45 PM

ESTIMATED QUANTITIES		
BRIDGE @ STA. 18+77.00 -L-	RIP RAP CLASS II	GEOTEXTILE FOR DRAINAGE
	TONS	SQUARE YARDS
END BENT 1	117	130
END BENT 2	45	50
TOTAL	162	180

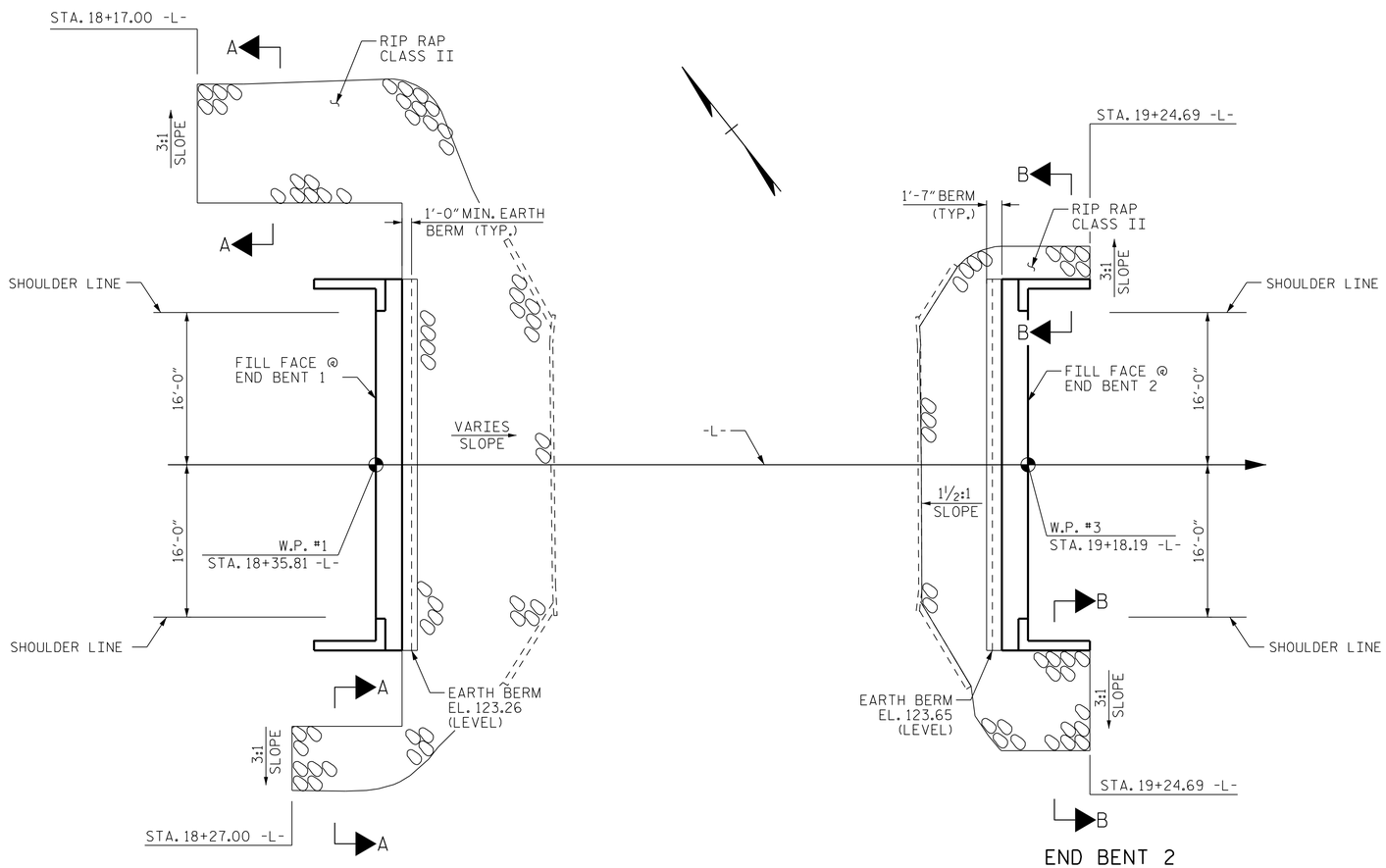

PLAN

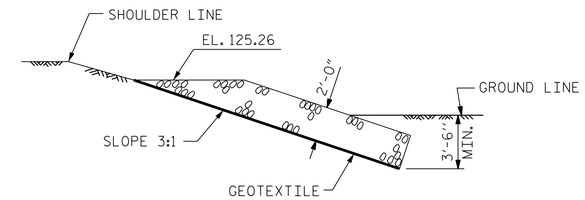

SECTION A-A

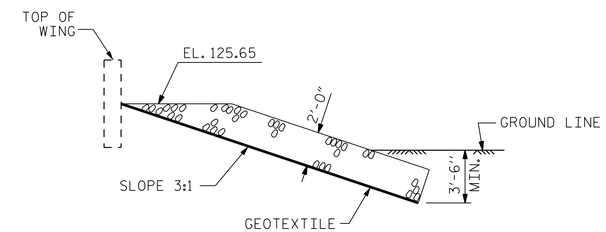

SECTION B-B

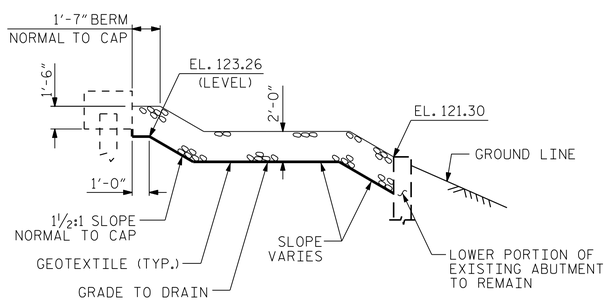

℄ SECTION @ END BENT 1

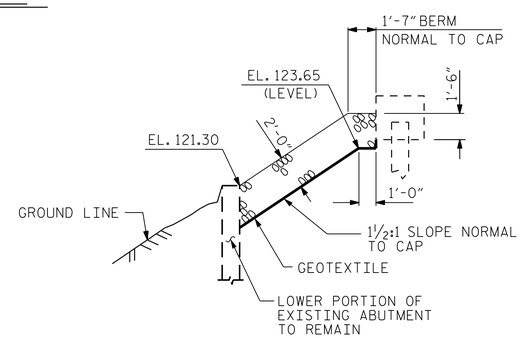

℄ SECTION @ END BENT 2

BERM RIP RAPPED

PROJECT NO. 17BP.3.R.59
SAMPSON COUNTY
STATION: 18+77.00 -L-

DOCUMENT NOT CONSIDERED FINAL UNLESS ALL SIGNATURES COMPLETED

CDM Smith
CDM SMITH
5400 Glenwood Avenue, Suite 400
Raleigh, NC 27612-3228
NC COA No. F-1255

DRAWN BY :	VDK	DATE :	2/18
CHECKED BY :	THF	DATE :	2/18
DESIGN ENGINEER :	VDK	DATE :	2/18

DWG. No.

NORTH CAROLINA PROFESSIONAL SEAL 016301 ENGINEER TING H FANG 4/25/2018

STATE OF NORTH CAROLINA
DEPARTMENT OF TRANSPORTATION
RALEIGH

STANDARD

RIP RAP DETAILS

REVISIONS						
NO.	BY:	DATE:	NO.	BY:	DATE:	
1			3			
2			4			

SHEET NO. S-18
TOTAL SHEETS 19

FILE: c:\pw_pll\fangth\d0938835\401_035_17BP.3.R.59_SMU_RR_018_810252.dgn
DATE: 4/25/2018 11:09:34 PM

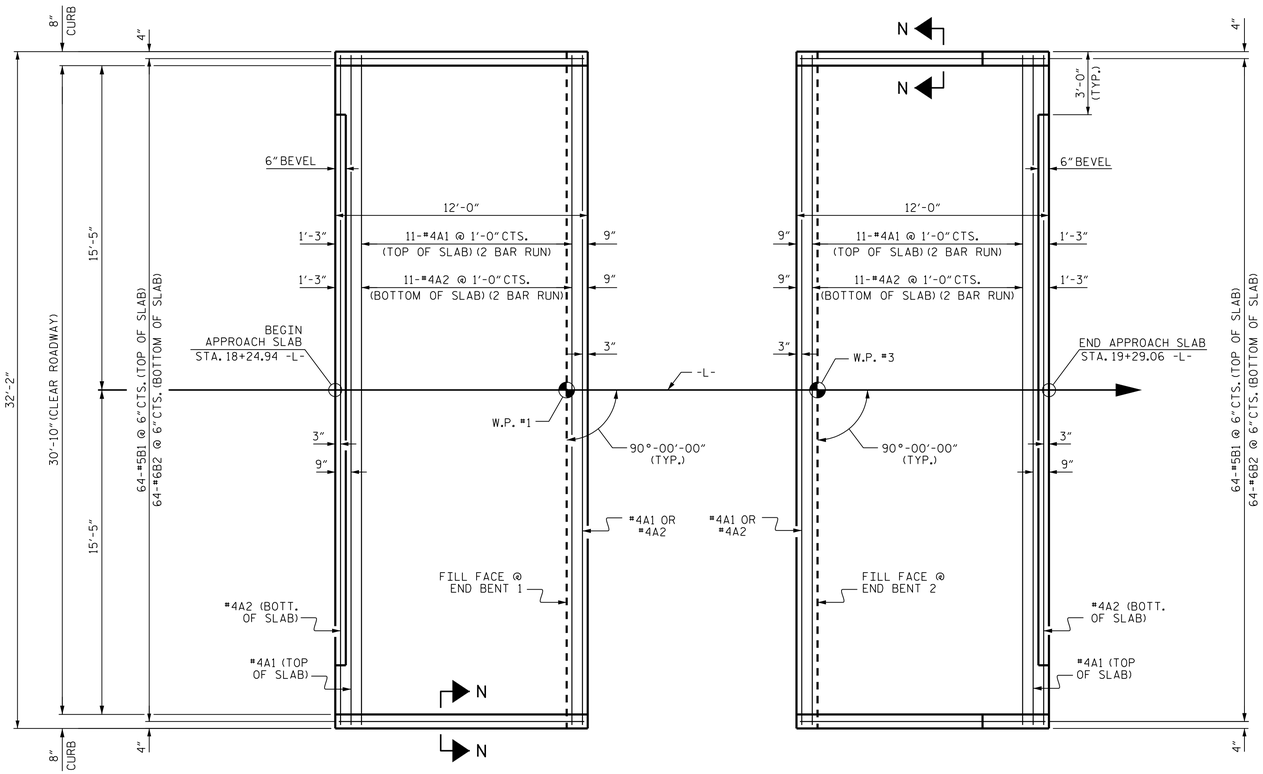

AT END BENT 1

AT END BENT 2

PLAN

DIMENSIONS SHOWN ARE TYPICAL FOR BOTH APPROACH SLABS

NOTES

FOR BRIDGE APPROACH FILL INCLUDING GEOTEXTILE, 4" Ø DRAINAGE PIPE, AND SELECT MATERIAL BACKFILL, SEE ROADWAY PLANS.

GEOTEXTILE SHALL BE TYPE 1 IN ACCORDANCE WITH THE STANDARD SPECIFICATIONS SECTION 1056.

SELECT MATERIAL BACKFILL (CLASS V OR CLASS VI) SHALL BE IN ACCORDANCE WITH STANDARD SPECIFICATIONS SECTION 1016.

SELECT MATERIAL BACKFILL IS TO BE CONTINUOUS ALONG FILL FACE OF BACKWALL FROM OUTSIDE EDGE TO OUTSIDE EDGE OF APPROACH SLAB.

FOR THE 4" Ø DRAINAGE PIPE OUTLET(S), SEE ROADWAY STANDARD DRAWINGS.

AREA BETWEEN THE WINGWALL AND APPROACH SLAB SHALL BE GRADED TO DRAIN THE WATER AWAY FROM THE FILL FACE OF THE BRIDGE AND SHALL BE PAVED. SEE ROADWAY PLANS.

APPROACH SLAB GROOVING IS NOT REQUIRED.

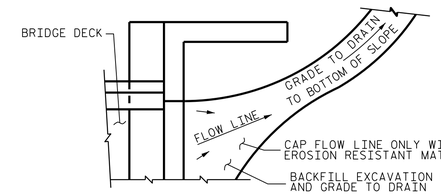

NOTE: IF THE APPROACH SLAB IS NOT CONSTRUCTED IMMEDIATELY AFTER THE BACKFILLING OF THE END BENT EXCAVATION, GRADE TO DRAIN TO THE BOTTOM OF THE SLOPE AND PROVIDE EROSION RESISTANT MATERIAL, SUCH AS FIBERGLASS ROVING OR AS DIRECTED BY THE ENGINEER TO PREVENT SOIL EROSION AND TO PROTECT THE AREA ADJACENT TO THE STRUCTURE. THE CONTRACTOR WILL BE REQUIRED TO REMOVE THESE MATERIALS PRIOR TO CONSTRUCTION OF THE APPROACH SLAB.

BILL OF MATERIAL

APPROACH SLAB AT EB 1

BAR	NO.	SIZE	TYPE	LENGTH	WEIGHT
* A1	26	#4	STR	16'-11"	294
A2	26	#4	STR	16'-9"	291
* B1	64	#5	STR	11'-2"	745
B2	64	#6	STR	11'-8"	1121
REINFORCING STEEL				LBS.	1412
* EPOXY COATED REINFORCING STEEL				LBS.	1039
CLASS AA CONCRETE				C. Y.	18.4

APPROACH SLAB AT EB 2

BAR	NO.	SIZE	TYPE	LENGTH	WEIGHT
* A1	26	#4	STR	16'-11"	294
A2	26	#4	STR	16'-9"	291
* B1	64	#5	STR	11'-2"	745
B2	64	#6	STR	11'-8"	1121
REINFORCING STEEL				LBS.	1412
* EPOXY COATED REINFORCING STEEL				LBS.	1039
CLASS AA CONCRETE				C. Y.	18.4

SPLICE LENGTHS

BAR SIZE	EPOXY COATED	UNCOATED
#4	2'-0"	1'-9"
#5	2'-6"	2'-2"
#6	3'-10"	2'-7"

TEMPORARY DRAINAGE DETAIL

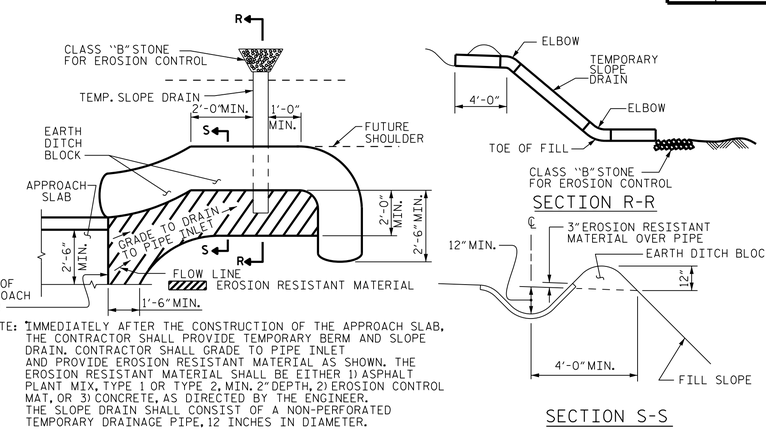

NOTE: IMMEDIATELY AFTER THE CONSTRUCTION OF THE APPROACH SLAB, THE CONTRACTOR SHALL PROVIDE TEMPORARY BERM AND SLOPE DRAIN. CONTRACTOR SHALL GRADE TO PIPE INLET AND PROVIDE EROSION RESISTANT MATERIAL AS SHOWN. THE EROSION RESISTANT MATERIAL SHALL BE EITHER 1) ASPHALT PLANT MIX, TYPE 1 OR TYPE 2, MIN. 2" DEPTH, 2) EROSION CONTROL MAT, OR 3) CONCRETE, AS DIRECTED BY THE ENGINEER. THE SLOPE DRAIN SHALL CONSIST OF A NON-PERFORATED TEMPORARY DRAINAGE PIPE, 12 INCHES IN DIAMETER.

PLAN VIEW

SECTION R-R

SECTION S-S

TEMPORARY BERM AND SLOPE DRAIN DETAILS

(TO BE USED WHEN SHOULDER BERM GUTTER IS REQUIRED)

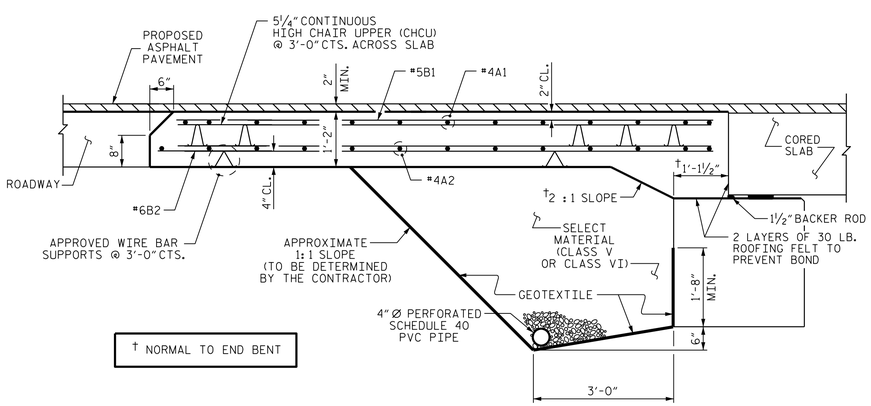

† NORMAL TO END BENT

SECTION THRU SLAB

(TYPE II - MODIFIED APPROACH FILL)

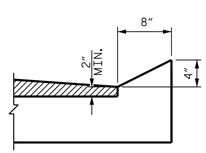

SECTION N-N

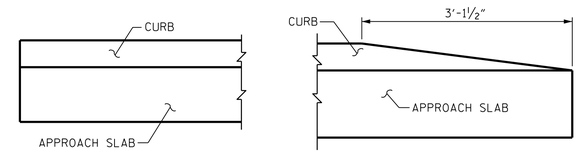

END OF CURB WITH SHOULDER BERM GUTTER

AT END BENT 1 (SEE ROADWAY PLANS)

END OF CURB WITHOUT SHOULDER BERM GUTTER

AT END BENT 2 (SEE ROADWAY PLANS)

CURB DETAILS

PROJECT NO. 17BP.3.R.59

SAMPSON COUNTY

STATION: 18+77.00 -L-

DOCUMENT NOT CONSIDERED FINAL UNLESS ALL SIGNATURES COMPLETED

CDM Smith
CDM SMITH
5400 Glenwood Avenue, Suite 400
Raleigh, NC 27612-3228
NC COA No. F-1255

DRAWN BY :	VDK	DATE :	2/18
CHECKED BY :	THF	DATE :	2/18
DESIGN ENGINEER :	VDK	DATE :	2/18

DWG. No.

NORTH CAROLINA PROFESSIONAL SEAL 016301 ENGINEER TING H FANG
4/25/2018

STATE OF NORTH CAROLINA
DEPARTMENT OF TRANSPORTATION
RALEIGH

STANDARD
BRIDGE APPROACH SLAB
FOR PRESTRESSED CONCRETE
CORED SLAB UNIT
(SUB-REGIONAL TIER)
90° SKEW

REVISIONS							
NO.	BY:	DATE:	NO.	BY:	DATE:	SHEET NO.	S-19
1			3			TOTAL SHEETS	19
2			4				

STD. NO. BAS_33_90S

FILE: c:\pw_pll\langth\d0938835\401_037_17BP3R59_SMU_AS_019_810232.dgn
DATE: 4/25/2018 11:10:02 PM

STANDARD NOTES

DESIGN DATA:

SPECIFICATIONS	A.A.S.H.T.O. (CURRENT)
LIVE LOAD	SEE PLANS
IMPACT ALLOWANCE	SEE A.A.S.H.T.O.
STRESS IN EXTREME FIBER OF	
STRUCTURAL STEEL - AASHTO M270 GRADE 36	20,000 LBS. PER SQ. IN.
- AASHTO M270 GRADE 50W	27,000 LBS. PER SQ. IN.
- AASHTO M270 GRADE 50	27,000 LBS. PER SQ. IN.
REINFORCING STEEL IN TENSION	
GRADE 60	24,000 LBS. PER SQ. IN.
CONCRETE IN COMPRESSION	1,200 LBS. PER SQ. IN.
CONCRETE IN SHEAR	SEE A.A.S.H.T.O.
STRUCTURAL TIMBER - TREATED OR	
UNTREATED - EXTREME FIBER STRESS	1,800 LBS. PER SQ. IN.
COMPRESSION PERPENDICULAR TO GRAIN OF TIMBER	375 LBS. PER SQ. IN.
EQUIVALENT FLUID PRESSURE OF EARTH	30 LBS. PER CU. FT. (MINIMUM)

MATERIAL AND WORKMANSHIP:

EXCEPT AS MAY OTHERWISE BE SPECIFIED ON PLANS OR IN THE SPECIAL PROVISIONS, ALL MATERIAL AND WORKMANSHIP SHALL BE IN ACCORDANCE WITH THE 2018 "STANDARD SPECIFICATIONS FOR ROADS AND STRUCTURES" OF THE N. C. DEPARTMENT OF TRANSPORTATION.

STEEL SHEET PILING FOR PERMANENT OR TEMPORARY APPLICATIONS SHALL BE HOT ROLLED.

CONCRETE:

UNLESS OTHERWISE REQUIRED ON PLANS, CLASS A CONCRETE SHALL BE USED FOR ALL PORTIONS OF ALL STRUCTURES WITH THE EXCEPTION THAT: CLASS AA CONCRETE SHALL BE USED IN BRIDGE SUPERSTRUCTURES, ABUTMENT BACKWALLS, AND APPROACH SLABS; AND CLASS B CONCRETE SHALL BE USED FOR SLOPE PROTECTION AND RIP RAP.

CONCRETE CHAMFERS:

UNLESS OTHERWISE NOTED ON THE PLANS, ALL EXPOSED CORNERS ON STRUCTURES SHALL BE CHAMFERED 3/4" WITH THE FOLLOWING EXCEPTIONS: TOP CORNERS OF CURBS MAY BE ROUNDED TO 1-1/2" RADIUS WHICH IS BUILT INTO CURB FORMS; CORNERS OF TRANSVERSE FLOOR EXPANSION JOINTS SHALL BE ROUNDED WITH A 1/4" FINISHING TOOL UNLESS OTHERWISE REQUIRED ON PLANS; AND CORNERS OF EXPANSION JOINTS IN THE ROADWAY FACES AND TOPS OF CURBS AND SIDEWALKS SHALL BE ROUNDED TO A 1/4" RADIUS WITH A FINISHING STONE OR TOOL UNLESS OTHERWISE REQUIRED ON PLANS.

DOWELS:

DOWELS WHEN INDICATED ON PLANS AS FOR CULVERT EXTENSIONS, SHALL BE EMBEDDED AT LEAST 12" INTO THE OLD CONCRETE AND GROUTED INTO PLACE WITH 1:2 CEMENT MORTAR.

ALLOWANCE FOR DEAD LOAD DEFLECTION, SETTLEMENT, ETC. IN CASTING SUPERSTRUCTURES:

BRIDGES SHALL BE BUILT ON THE GRADE OR VERTICAL CURVE SHOWN ON PLANS. SLABS, CURBS AND PARAPETS SHALL CONFORM TO THE GRADE OR CURVE.

ALL DIMENSIONS WHICH ARE GIVEN IN SECTION AND ARE AFFECTED BY DEAD LOAD DEFLECTIONS ARE DIMENSIONS AT CENTER LINE OF BEARING UNLESS OTHERWISE NOTED ON PLANS. IN SETTING FORMS FOR STEEL BEAM BRIDGES AND PRESTRESSED CONCRETE GIRDER BRIDGES, ADJUSTMENTS SHALL BE MADE DUE TO THE DEAD LOAD DEFLECTIONS FOR THE ELEVATIONS SHOWN. WHERE BLOCKS ARE SHOWN OVER BEAMS FOR BUILDING UP TO THE SLAB, THE VERTICAL DIMENSIONS OF THE BLOCKS SHALL BE ADJUSTED BETWEEN BEARINGS TO COMPENSATE FOR DEAD LOAD DEFLECTIONS, VERTICAL CURVE ORDINATE, AND ACTUAL BEAM CAMBER. WHERE BOTTOM OF SLAB IS IN LINE WITH BOTTOM OF TOP FLANGES, DEPTH OF SLAB BETWEEN BEARINGS SHALL BE ADJUSTED TO COMPENSATE FOR DEAD LOAD DEFLECTION, VERTICAL CURVE ORDINATE, AND ACTUAL BEAM CAMBER.

IN SETTING FALSEWORK AND FORMS FOR REINFORCED CONCRETE SPANS, AN ALLOWANCE SHALL BE MADE FOR DEAD LOAD DEFLECTIONS, SETTLEMENT OF FALSEWORK, AND PERMANENT CAMBER WHICH SHALL BE PROVIDED FOR IN ADDITION TO THE ELEVATIONS SHOWN. AFTER REMOVAL OF THE FALSEWORK, THE FINISHED STRUCTURES SHALL CONFORM TO THE PROFILE AND ELEVATIONS SHOWN ON THE PLANS AND CONSTRUCTION ELEVATIONS FURNISHED BY THE ENGINEER.

DETAILED DRAWINGS FOR FALSEWORK OR FORMS FOR BRIDGE SUPERSTRUCTURE AND ANY STRUCTURE OR PARTS OF A STRUCTURE AS NOTED ON THE PLANS SHALL BE SUBMITTED TO THE ENGINEER FOR APPROVAL BEFORE CONSTRUCTION OF THE FALSEWORK OR FORMS IS STARTED.

REINFORCING STEEL:

ALL REINFORCING STEEL SHALL BE DEFORMED. DIMENSIONS RELATIVE TO PLACEMENT OF REINFORCING ARE TO CENTERS OF BARS UNLESS OTHERWISE INDICATED IN THE PLANS. DIMENSIONS ON BAR DETAILS ARE TO CENTERS OF BARS OR ARE OUT TO OUT AS INDICATED ON PLANS.

WIRE BAR SUPPORTS SHALL BE PROVIDED FOR REINFORCING STEEL WHERE INDICATED ON THE PLANS. WHEN BAR SUPPORT PIECES ARE PLACED IN CONTINUOUS LINES, THEY SHALL BE SO PLACED THAT THE ENDS OF THE SUPPORTING WIRES SHALL BE LAPPED TO LOCK LEGS ON ADJOINING PIECES.

STRUCTURAL STEEL:

AT THE CONTRACTOR'S OPTION, HE MAY SUBSTITUTE 7/8" Ø SHEAR STUDS FOR THE 3/4" Ø STUDS SPECIFIED ON THE PLANS. THIS SUBSTITUTION SHALL BE MADE AT THE RATE OF 3 - 7/8" Ø STUDS FOR 4 - 3/4" Ø STUDS, AND STUD SPACING CHANGES SHALL BE MADE AS NECESSARY TO PROVIDE THE SAME EQUIVALENT NUMBER OF 7/8" Ø STUDS ALONG THE BEAM AS SHOWN FOR 3/4" Ø STUDS BASED ON THE RATIO OF 3 - 7/8" Ø STUDS FOR 4 - 3/4" Ø STUDS. STUDS OF THE LENGTH SPECIFIED ON THE PLANS MUST BE PROVIDED. THE MAXIMUM SPACING SHALL BE 2'-0".

EXCEPT AT THE INTERIOR SUPPORTS OF CONTINUOUS BEAMS WHERE THE COVER PLATE IS IN CONTACT WITH BEARING PLATE, THE CONTRACTOR MAY, AT HIS OPTION, SUBSTITUTE FOR THE COVER PLATES DESIGNATED ON THE PLANS COVER PLATES OF THE EQUIVALENT AREA PROVIDED THESE PLATES ARE AT LEAST 5/16" IN THICKNESS AND DO NOT EXCEED A WIDTH EQUAL TO THE FLANGE WIDTH LESS 2" OR A THICKNESS EQUAL TO 2 TIMES THE FLANGE THICKNESS. THE SIZE OF FILLET WELDS SHALL CONFORM TO THE REQUIREMENTS OF THE CURRENT ANSI/AASHTO/AWS "BRIDGE WELDING CODE". ELECTROSLAG WELDING WILL NOT BE PERMITTED.

WITH THE SOLE EXCEPTION OF EDGES AT SURFACES WHICH BEAR ON OTHER SURFACES, ALL SHARP EDGES AND ENDS OF SHAPES AND PLATES SHALL BE SLIGHTLY ROUNDED BY SUITABLE MEANS TO A RADIUS OF APPROXIMATELY 1/16 INCH OR EQUIVALENT FLAT SURFACE AT A SUITABLE ANGLE PRIOR TO PAINTING, GALVANIZING, OR METALLIZING.

HANDRAILS AND POSTS:

METAL STANDARDS AND FACES OF THE CONCRETE END POSTS FOR THE METAL RAIL SHALL BE SET NORMAL TO THE GRADE OF THE CURB, UNLESS OTHERWISE SHOWN ON PLANS. THE METAL RAIL AND TOPS OF CONCRETE POSTS USED WITH THE ALUMINUM RAIL SHALL BE BUILT PARALLEL TO THE GRADE OF THE CURB.

METAL HANDRAILS SHALL BE IN ACCORDANCE WITH THE PLANS. RAILS SHALL BE AS MANUFACTURED FOR BRIDGE RAILING. CASTINGS SHALL BE OF A UNIFORM APPEARANCE. FINS AND OTHER DEFORMATIONS RESULTING FROM CASTING OR OTHERWISE SHALL BE REMOVED IN A MANNER SO THAT A UNIFORM COLORING OF THE COMPLETED CASTING SHALL BE OBTAINED. CASTINGS WITH DISCOLORATIONS OR OF NON-UNIFORM COLORING WILL NOT BE ACCEPTED. CERTIFIED MILL REPORTS ARE REQUIRED FOR METAL RAILS AND POSTS.

SPECIAL NOTES:

GENERALLY, IN CASE OF DISCREPANCY, THIS STANDARD SHEET OF NOTES SHALL GOVERN OVER THE SPECIFICATIONS, BUT THE REMAINDER OF THE PLANS SHALL GOVERN OVER NOTES HEREON, AND SPECIAL PROVISIONS SHALL GOVERN OVER ALL. SEE SPECIFICATIONS ARTICLE 105-4.

ENGLISH

JANUARY, 1990