DocuSign Envelope ID: 616F2EEF-EE65-45E5-A032-EE01B0061212

09/08/99

TIP: B-5651

See Sheet 1A For Index of Sheets
See Sheet 1B For Conventional Symbols

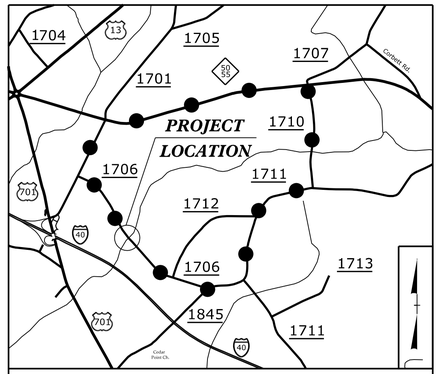

FINAL PLANS

DETOUR

VICINITY MAP N.T.S.

STATE OF NORTH CAROLINA
DIVISION OF HIGHWAYS

SAMPSON COUNTY

STATE	STATE PROJECT REFERENCE NO.	SHEET NO.	TOTAL SHEETS
N.C.	B-5651	1	

STATE PROJ. NO.	F.A. PROJ. NO.	DESCRIPTION
45606.1.2	BRZ-1706(005)	PE
45606.2.1	BRZ-1706(005)	ROW, UTL.
45606.3.1		CONST.

LOCATION: BRIDGE NO. 214 OVER KILL CREEK ON SR 1706 (KORNEGAY TOWN RD.)

TYPE OF WORK: GRADING, DRAINAGE, PAVING AND STRUCTURE (BRIDGE)

NAD 83/
NSRS 2007

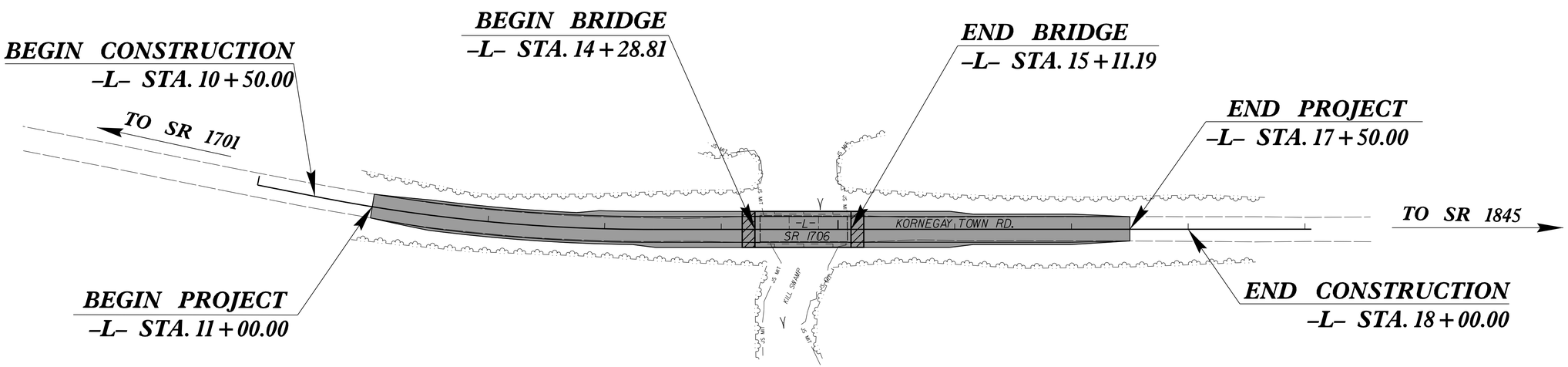

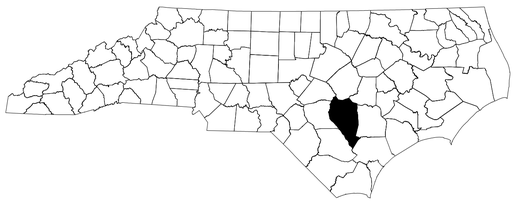

RS&H

DOCUMENT NOT CONSIDERED FINAL UNLESS ALL SIGNATURES COMPLETED

THERE IS NO CONTROL OF ACCESS ON THIS PROJECT.

CONTRACT: DC00250

GRAPHIC SCALES

50 25 0 50 100
PLANS

50 25 0 50 100
PROFILE (HORIZONTAL)

10 5 0 10 20
PROFILE (VERTICAL)

DESIGN DATA

ADT 2014 = 450
ADT 2025 = 900
T = 6 %
V = 60 MPH

FUNC CLASS =
LOCAL
SUBREGIONAL TIER

PROJECT LENGTH

LENGTH ROADWAY = 0.107 MILES
LENGTH STRUCTURE = 0.016 MILES
TOTAL LENGTH = 0.123 MILES

Prepared In the Office of:
RS&H
ARCHITECTS-ENGINEERS-PLANNERS, INC.
8521 SIX FORKS ROAD, SUITE 400
RALEIGH, NC 27615

2018 STANDARD SPECIFICATIONS

RIGHT OF WAY DATE:
DECEMBER 13, 2018

LETTING DATE:
SEPTEMBER 19, 2019

RICHARD BOLLINGER, PE
PROJECT ENGINEER

CHARLES YOUNG, PE
PROJECT DESIGN ENGINEER

DAVID LEONARD, PE
NCDOT CONTACT

HYDRAULICS ENGINEER
SEAL 18442
8/5/2019
P.E.
SIGNATURE:

ROADWAY DESIGN ENGINEER
SEAL 046062
8/2/2019
P.E.
SIGNATURE:

STATE OF NORTH CAROLINA DEPARTMENT OF TRANSPORTATION

02-AUG-2019 07:49
R:\Roadway\Proj\B5651_Rdy_tsh.dgn
$$$$USERNAME$$$$

DocuSign Envelope ID: 616F2EEF-EE65-45E5-A032-EE01B0061212

8/17/99

PROJECT REFERENCE NO.	SHEET NO.
B-5651	1A

ROADWAY DESIGN ENGINEER

NORTH CAROLINA PROFESSIONAL ENGINEER SEAL 046062 CHARLES J. YOUNG 8/2/2019

DOCUMENT NOT CONSIDERED FINAL UNLESS ALL SIGNATURES COMPLETED

INDEX OF SHEETS

SHEET NUMBER	SHEET
1	TITLE SHEET
1A	INDEX OF SHEETS, GENERAL NOTES, AND LIST OF STANDARD DRAWINGS
1B	CONVENTIONAL SYMBOLS
1C-1 THRU 1E-1	SURVEY CONTROL SHEETS
2A-1	PAVEMENT SCHEDULE AND TYPICAL SECTIONS
2B-1	MODIFIED METHOD III CLEARING DETAIL
2C-1	TYPE III - STRUCTURE ANCHOR UNIT
2C-2	W-BEAM RAIL SECTION DETAIL
3B-1	SUMMARY OF DRAINAGE QUANTITIES SUMMARY OF GUARDRAIL, EARTHWORK SUMMARY, PAVEMENT REMOVAL SUMMARY AND SHOULDER BERM GUTTER SUMMARY
4	PLAN SHEET
5	PROFILE SHEET
TMP-1 THRU TMP-2A	TRAFFIC MANAGEMENT PLANS
PMP-1 THRU PMP-2	PAVEMENT MARKING PLANS
EC-1 THRU EC-5	EROSION CONTROL PLANS
UO-1 THRU UO-2	UTILITIES BY OTHERS
X-1A	CROSS-SECTION SUMMARY SHEET
X-1 THRU X-5	CROSS-SECTIONS
S-1 THRU S-17	STRUCTURE PLANS
SN	STRUCTURE STANDARD NOTES SHEET

GENERAL NOTES

GENERAL NOTES: 2018 SPECIFICATIONS
EFFECTIVE: 01-16-2018
REVISED:

GRADE LINE:

GRADING AND SURFACING:

THE GRADE LINES SHOWN DENOTE THE FINISHED ELEVATION OF THE PROPOSED SURFACING AT GRADE POINTS SHOWN ON THE TYPICAL SECTIONS. GRADE LINES MAY BE ADJUSTED AT THEIR BEGINNING AND ENDING AND AT STRUCTURES AS DIRECTED BY THE ENGINEER IN ORDER TO SECURE A PROPER TIE-IN.

CLEARING:

CLEARING ON THIS PROJECT SHALL BE PERFORMED TO THE LIMITS ESTABLISHED BY MODIFIED METHOD III.

SUPERELEVATION:

ALL CURVES ON THIS PROJECT SHALL BE SUPERELEVATED IN ACCORDANCE WITH STD. NO. 225.04 USING THE RATE OF SUPERELEVATION AND RUNOFF SHOWN ON THE PLANS. SUPERELEVATION IS TO BE REVOLVED ABOUT THE GRADE POINTS SHOWN ON THE TYPICAL SECTIONS.

SHOULDER CONSTRUCTION:

ASPHALT, EARTH, AND CONCRETE SHOULDER CONSTRUCTION ON THE HIGH SIDE OF SUPERELEVATED CURVES SHALL BE IN ACCORDANCE WITH STD. NO. 560.01

GUARDRAIL:

THE GUARDRAIL LOCATIONS SHOWN ON THE PLANS MAY BE ADJUSTED DURING CONSTRUCTION AS DIRECTED BY THE ENGINEER. THE CONTRACTOR SHOULD CONSULT WITH THE ENGINEER PRIOR TO ORDERING GUARDRAIL MATERIAL.

END BENTS:

THE ENGINEER SHALL CHECK THE STRUCTURE END BENT PLANS, DETAILS, AND CROSS-SECTION PRIOR TO SETTING OF THE SLOPE STAKES FOR THE EMBANKMENT OR EXCAVATION APPROACHING A BRIDGE.

UTILITIES:

UTILITY OWNERS ON THIS PROJECT ARE CENTURYLINK.

ANY RELOCATION OF EXISTING UTILITIES WILL BE ACCOMPLISHED BY OTHERS, EXCEPT AS SHOWN ON THE PLANS.

RIGHT-OF-WAY MARKERS:

ALL RIGHT-OF-WAY & PERMANENT EASEMENT MARKERS ON THIS PROJECT ARE PLACED BY L&S. THE CONTRACT SURVEYOR WILL BE RESPONSIBLE FOR RESETTING ANY POINTS DISTURBED DURING CONSTRUCTION.

STANDARD DRAWINGS

EFF. 01-16-2018
REV.

2018 ROADWAY ENGLISH STANDARD DRAWINGS

The following Roadway Standards as appear in "Roadway Standard Drawings" Highway Design Branch - N. C. Department of Transportation - Raleigh, N. C., Dated January, 2018 are applicable to this project and by reference hereby are considered a part of these plans:

STD.NO.	TITLE
DIVISION 2 - EARTHWORK	
225.02	Guide for Grading Subgrade - Secondary and Local
225.04	Method of Obtaining Superelevation - Two Lane Pavement
DIVISION 3 - PIPE CULVERTS	
300.01	Method of Pipe Installation
DIVISION 4 - MAJOR STRUCTURES	
422.02	Bridge Approach Fills - Type II Modified Approach Fill
DIVISION 5 - SUBGRADE, BASES AND SHOULDERS	
560.01	Method of Shoulder Construction - High Side of Superelevated Curve - Method I
DIVISION 8 - INCIDENTALS	
816.01	Concrete Pads - for Shoulder Drain Installation
840.14	Concrete Drop Inlet - 12" thru 30" Pipe
840.29	Frames and Narrow Slot Flat Grates
840.35	Traffic Bearing Grated Drop Inlet - for Cast Iron Double Frame and Grates
846.04	Drop Inlet Installation in Shoulder Berm Gutter
862.01	Guardrail Placement
862.02	Guardrail Installation
862.03	Structure Anchor Units
876.02	Guide for Rip Rap at Pipe Outlets

02-AUG-2019 07:50
R:\Roadway\Proj\B5651_Rdy_tsh.dgn
$$USERNAME$$

DocuSign Envelope ID: 616F2EEF-EE65-45E5-A032-EE01B0061212

12/2/2016

PROJECT REFERENCE NO.	SHEET NO.
B-5651	1B

STATE OF NORTH CAROLINA, DIVISION OF HIGHWAYS

CONVENTIONAL PLAN SHEET SYMBOLS

Note: Not to Scale

**S.U.E. = Subsurface Utility Engineering*

BOUNDARIES AND PROPERTY:

- State Line
- County Line
- Township Line
- City Line
- Reservation Line
- Property Line
- Existing Iron Pin — EIP
- Computed Property Corner
- Property Monument — ECM
- Parcel/Sequence Number — 123
- Existing Fence Line
- Proposed Woven Wire Fence
- Proposed Chain Link Fence
- Proposed Barbed Wire Fence
- Existing Wetland Boundary — WLB
- Proposed Wetland Boundary — WLB
- Existing Endangered Animal Boundary — EAB
- Existing Endangered Plant Boundary — EPB
- Existing Historic Property Boundary — HPB
- Known Contamination Area: Soil — S
- Potential Contamination Area: Soil — S
- Known Contamination Area: Water — W
- Potential Contamination Area: Water — W
- Contaminated Site: Known or Potential

BUILDINGS AND OTHER CULTURE:

- Gas Pump Vent or U/G Tank Cap
- Sign — S
- Well — W
- Small Mine
- Foundation
- Area Outline
- Cemetery
- Building
- School
- Church
- Dam

HYDROLOGY:

- Stream or Body of Water
- Hydro, Pool or Reservoir
- Jurisdictional Stream — JS
- Buffer Zone 1 — BZ 1
- Buffer Zone 2 — BZ 2
- Flow Arrow
- Disappearing Stream
- Spring
- Wetland
- Proposed Lateral, Tail, Head Ditch — FLOW
- False Sump

RAILROADS:

- Standard Gauge — CSX TRANSPORTATION
- RR Signal Milepost — MILEPOST 35
- Switch — SWITCH
- RR Abandoned
- RR Dismantled

RIGHT OF WAY & PROJECT CONTROL:

- Secondary Horiz and Vert Control Point
- Primary Horiz Control Point
- Primary Horiz and Vert Control Point
- Exist Permanent Easment Pin and Cap
- New Permanent Easement Pin and Cap
- Vertical Benchmark
- Existing Right of Way Marker
- Existing Right of Way Line
- New Right of Way Line — RW
- New Right of Way Line with Pin and Cap — RW
- New Right of Way Line with Concrete or Granite R/W Marker — RW
- New Control of Access Line with Concrete C/A Marker — CA
- Existing Control of Access — CA
- New Control of Access — CA
- Existing Easement Line — E
- New Temporary Construction Easement — E
- New Temporary Drainage Easement — TDE
- New Permanent Drainage Easement — PDE
- New Permanent Drainage / Utility Easement — DUE
- New Permanent Utility Easement — PUE
- New Temporary Utility Easement — TUE
- New Aerial Utility Easement — AUE

ROADS AND RELATED FEATURES:

- Existing Edge of Pavement
- Existing Curb
- Proposed Slope Stakes Cut — C
- Proposed Slope Stakes Fill — F
- Proposed Curb Ramp — CR
- Existing Metal Guardrail
- Proposed Guardrail
- Existing Cable Guiderail
- Proposed Cable Guiderail
- Equality Symbol
- Pavement Removal

VEGETATION:

- Single Tree
- Single Shrub
- Hedge
- Woods Line
- Orchard
- Vineyard — Vineyard

EXISTING STRUCTURES:

MAJOR:

- Bridge, Tunnel or Box Culvert — CONC
- Bridge Wing Wall, Head Wall and End Wall — CONC WW

MINOR:

- Head and End Wall — CONC HW
- Pipe Culvert
- Footbridge
- Drainage Box: Catch Basin, DI or JB — CB
- Paved Ditch Gutter
- Storm Sewer Manhole — S
- Storm Sewer — S

UTILITIES:

POWER:

- Existing Power Pole
- Proposed Power Pole
- Existing Joint Use Pole
- Proposed Joint Use Pole
- Power Manhole — P
- Power Line Tower
- Power Transformer
- U/G Power Cable Hand Hole
- H-Frame Pole
- U/G Power Line LOS B (S.U.E.*) — P
- U/G Power Line LOS C (S.U.E.*) — P
- U/G Power Line LOS D (S.U.E.*) — P

TELEPHONE:

- Existing Telephone Pole
- Proposed Telephone Pole
- Telephone Manhole — T
- Telephone Pedestal — T
- Telephone Cell Tower
- U/G Telephone Cable Hand Hole
- U/G Telephone Cable LOS B (S.U.E.*) — T
- U/G Telephone Cable LOS C (S.U.E.*) — T
- U/G Telephone Cable LOS D (S.U.E.*) — T
- U/G Telephone Conduit LOS B (S.U.E.*) — TC
- U/G Telephone Conduit LOS C (S.U.E.*) — TC
- U/G Telephone Conduit LOS D (S.U.E.*) — TC
- U/G Fiber Optics Cable LOS B (S.U.E.*) — T FO
- U/G Fiber Optics Cable LOS C (S.U.E.*) — T FO
- U/G Fiber Optics Cable LOS D (S.U.E.*) — T FO

WATER:

- Water Manhole — W
- Water Meter
- Water Valve
- Water Hydrant
- U/G Water Line LOS B (S.U.E*) — W
- U/G Water Line LOS C (S.U.E*) — W
- U/G Water Line LOS D (S.U.E*) — W
- Above Ground Water Line — A/G Water

TV:

- TV Pedestal — C
- TV Tower
- U/G TV Cable Hand Hole — HH
- U/G TV Cable LOS B (S.U.E.*) — TV
- U/G TV Cable LOS C (S.U.E.*) — TV
- U/G TV Cable LOS D (S.U.E.*) — TV
- U/G Fiber Optic Cable LOS B (S.U.E.*) — TV FO
- U/G Fiber Optic Cable LOS C (S.U.E.*) — TV FO
- U/G Fiber Optic Cable LOS D (S.U.E.*) — TV FO

GAS:

- Gas Valve
- Gas Meter
- U/G Gas Line LOS B (S.U.E.*) — G
- U/G Gas Line LOS C (S.U.E.*) — G
- U/G Gas Line LOS D (S.U.E.*) — G
- Above Ground Gas Line — A/G Gas

SANITARY SEWER:

- Sanitary Sewer Manhole
- Sanitary Sewer Cleanout
- U/G Sanitary Sewer Line — SS
- Above Ground Sanitary Sewer — A/G Sanitary Sewer
- SS Forced Main Line LOS B (S.U.E.*) — FSS
- SS Forced Main Line LOS C (S.U.E.*) — FSS
- SS Forced Main Line LOS D (S.U.E.*) — FSS

MISCELLANEOUS:

- Utility Pole
- Utility Pole with Base
- Utility Located Object
- Utility Traffic Signal Box — S
- Utility Unknown U/G Line LOS B (S.U.E.*) — ?UTL
- U/G Tank; Water, Gas, Oil
- Underground Storage Tank, Approx. Loc. — UST
- A/G Tank; Water, Gas, Oil
- Geoenvironmental Boring
- U/G Test Hole LOS A (S.U.E.*)
- Abandoned According to Utility Records — AATUR
- End of Information — E.O.I.

DocuSign Envelope ID: 616F2EEF-EE65-45E5-A032-EE01B0061212

PROJECT REFERENCE NO.	SHEET NO.
B-5651	1C-1
Location and Surveys	

SURVEY CONTROL SHEET

W/ EXISTING CENTERLINE ALIGNMENTS PRIOR TO CONSTRUCTION

BL POINT	DESC.	NORTH	EAST	ELEVATION	BL STATION	OFFSET
BL1	TRV CAP & REBAR	537994.5100	2198062.5740	150.80	5+00.00	0.00
BL3	TRV CAP & REBAR	537747.3820	2198250.8580	143.30	8+10.68	0.00
BL2	TRV CAP & REBAR	537445.8700	2198522.2840	148.43	12+16.37	0.00

NC GRID
NAD 83/NSRS 2007

****
BM1 ELEVATION = 142.25
N 537699 E 2198207
BL STATION 8+18 65 RIGHT
R/R SPIKE SET IN 28" CYPRESS
****

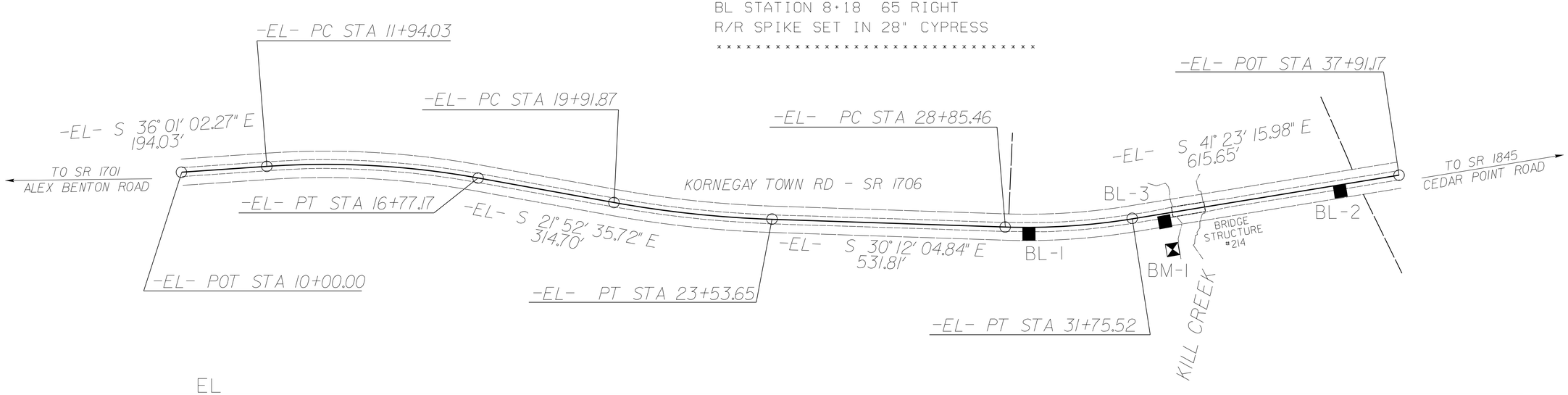

EL

POINT	N	E	BEARING	DIST	DELTA	D	L	T	R
POT	539703.660	2197157.118							
LINE			S 36°01'02.3" E	194.03					
PC	539546.720	2197271.214							
CURVE			S 28°56'49.0" E	481.91	14°08'26.5"(RT)	02°55'36.7"	483.14	242.80	1957.58
PT	539125.016	2197504.458							
LINE			S 21°52'35.7" E	314.70					
PC	538832.977	2197621.718							
CURVE			S 26°02'20.3" E	361.47	08°19'29.1"(LT)	02°18'03.6"	361.79	181.21	2490.03
PT	538508.198	2197780.397							
LINE			S 30°12'04.8" E	531.81					
PC	538048.576	2198047.918							
CURVE			S 35°47'40.4" E	289.60	11°11'11.1"(LT)	03°51'23.8"	290.06	145.49	1485.65
PT	537813.677	2198217.299							
LINE			S 41°23'16.0" E	615.65					
POT	537351.784	2198624.337							

NOTES:

1. PROJECT CONTROL WAS ESTABLISHED USING GNSS, THE GLOBAL NAVIGATION SATELLITE SYSTEM.

2. THE SURVEY CONTROL DATA FOR THIS PROJECT HAS BEEN COMPILED FROM VARIOUS SOURCES. IF FURTHER INFORMATION REGARDING PROJECT CONTROL IS NEEDED, PLEASE CONTACT THE LOCATION AND SURVEYS UNIT.

REVISIONS

6/2/99

15-MAY-2019 13:01
X:\PA\10030019 Div 3 Sampson 214 B-5651\Design\Roadway\Proj\b5651_ls_1c-1_190515.dgn
$$$$USERNAME$$$$

DocuSign Envelope ID: 616F2EEF-EE65-45E5-A032-EE01B0061212

PROJECT REFERENCE NO.	SHEET NO.
B-5651	1D-1
Location and Surveys	

PROPOSED ALIGNMENT CONTROL SHEET

L

TYPE	STATION	NORTH	EAST
POT	10+00.00	538092.5461	2198022.3255
PC	10+49.47	538049.7902	2198047.2114
PT	13+42.33	537812.6229	2198218.2276
POT	19+05.49	537390.1088	2198590.5637

NOTES:

1. PROJECT CONTROL WAS ESTABLISHED USING GNSS, THE GLOBAL NAVIGATION SATELLITE SYSTEM.

2. THE PROPOSED ALIGNMENT CONTROL DATA FOR THIS PROJECT HAS BEEN COMPILED FROM VARIOUS SOURCES. IF FURTHER INFORMATINO REGARDING PROJECT CONTROL IS NEEDED, PLEASE CONTACT THE LOCATION AND SURVEYS UNIT.

REVISIONS

6/2/99

15-MAY-2018 7:02
X:\WA\02003304 Div 3 Sampson 214 B-5651\Design\Roadway\Proj\b5651_ls_1d-1_190515.dgn
$$$$ FRAME $$$$

DocuSign Envelope ID: 616F2EEF-EE65-45E5-A032-EE01B0061212

PROJECT REFERENCE NO.	SHEET NO.
B-5651	1E-1

RIGHT OF WAY CONTROL SHEET

ROW CAP & REBAR MARKER-E

ALIGN	STATION	OFFSET	NORTH	EAST
L	11+75.00	-30.00	537961.27297	2198139.39652
L	11+75.00	-45.00	537969.87580	2198151.68437
L	13+42.33	-45.00	537842.37469	2198251.98898
L	13+70.00	-45.00	537821.61590	2198270.28245
L	15+55.00	-30.00	537672.90197	2198381.34174

NOTES:

1. IF FURTHER INFORMATION REGARDING PROJECT CONTROL IS NEEDED, PLEASE CONTACT THE LOCATION AND SURVEYS UNIT.

2. PROJECT CONTROL WAS ESTABLISHED USING GNSS, THE GLOBAL NAVIGATION SATELLITE SYSTEM.

REVISIONS

6/2/99

15-MAY-2019 15:03
$$$$USERNAME$$$$ Div 3 Sampson 214 B-5651\Design\Roadway\Proj\b5651_ls_1e-1_190515.dgn

DocuSign Envelope ID: 616F2EEF-EE65-45E5-A032-EE01B0061212

6/2/99

PAVEMENT SCHEDULE

(FINAL PAVEMENT SCHEDULE)

C1	PROP. APPROX. 1.5″ ASPHALT CONCRETE SURFACE COURSE, TYPE S9.5B, AT AN AVERAGE RATE OF 165 LBS. PER SQ. YD.
C2	PROP. APPROX. 3″ ASPHALT CONCRETE SURFACE COURSE, TYPE S9.5B, AT AN AVERAGE RATE OF 165 LBS. PER SQ. YD. IN EACH OF TWO LAYERS.
C3	PROP. VAR. DEPTH ASPHALT CONCRETE SURFACE COURSE, TYPE S9.5B, AT AN AVERAGE RATE OF 110 LBS. PER SQ. YD. PER 1″ DEPTH. TO BE PLACED IN LAYERS NOT LESS THAN 1″ IN DEPTH OR GREATER THAN 1.5″ IN DEPTH.
E1	PROP. APPROX. 5½″ ASPHALT CONCRETE BASE COURSE, TYPE B25.0C, AT AN AVERAGE RATE OF 627 LBS. PER SQ. YD.
E2	PROP. APPROX. VAR. DEPTH ASPHALT CONCRETE BASE COURSE, TYPE B25.0C, AT AN AVERAGE RATE OF 114 LBS. PER SQ. YD. PER 1″ DEPTH TO BE PLACED IN LAYERS NOT LESS THAN 4″ IN DEPTH OR GREATER THAN 5 ½″ IN DEPTH.
R1	SHOULDER BERM GUTTER
T	EARTH MATERIAL
U	EXISTING PAVEMENT
V	MILLING EXISTING PAVEMENT (1½″)
W	VARIABLE DEPTH ASPHALT PAVEMENT (SEE WEDGING DETAIL)

NOTE: ALL PAVEMENT SLOPES ARE 1:1 UNLESS NOTED OTHERWISE

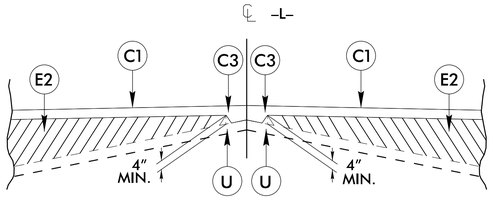

STANDARD WEDGING DETAIL

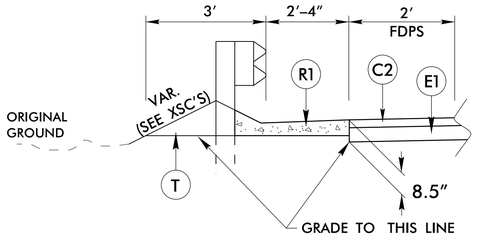

SHOULDER BERM GUTTER DETAIL

–L– STA. 13+55.25 TO L– STA. 14+18.00 (LT)

BRIDGE NO. 214

PROJECT REFERENCE NO.	SHEET NO.
B-5651	2A-1
ROADWAY DESIGN ENGINEER	PAVEMENT DESIGN ENGINEER

NORTH CAROLINA PROFESSIONAL SEAL 046062 ENGINEER CHARLES J. YOUNG
8/2/2019

DOCUMENT NOT CONSIDERED FINAL UNLESS ALL SIGNATURES COMPLETED

RS&H

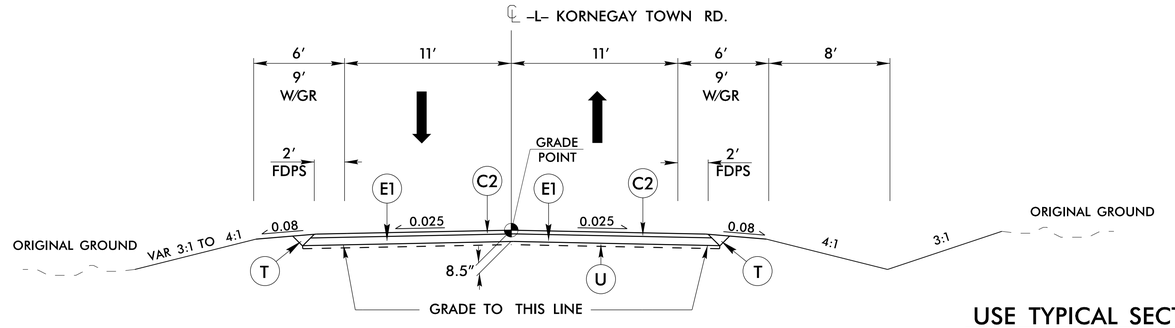

TYPICAL SECTION NO. 1

USE TYPICAL SECTION NO. 1

–L– 11+00.00 TO –L– STA. 14+28.81 (BEGIN BRIDGE)
–L– 15+11.19 (END BRIDGE) TO –L– STA. 16+00.00

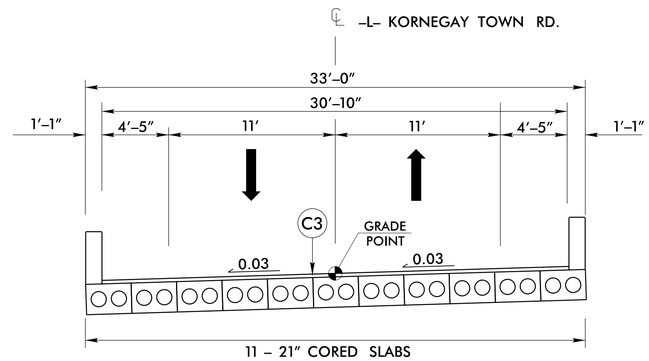

TYPICAL SECTION NO. 2

USE TYPICAL SECTION NO. 2

–L– STA. 14+28.81 TO –L– STA. 15+11.19

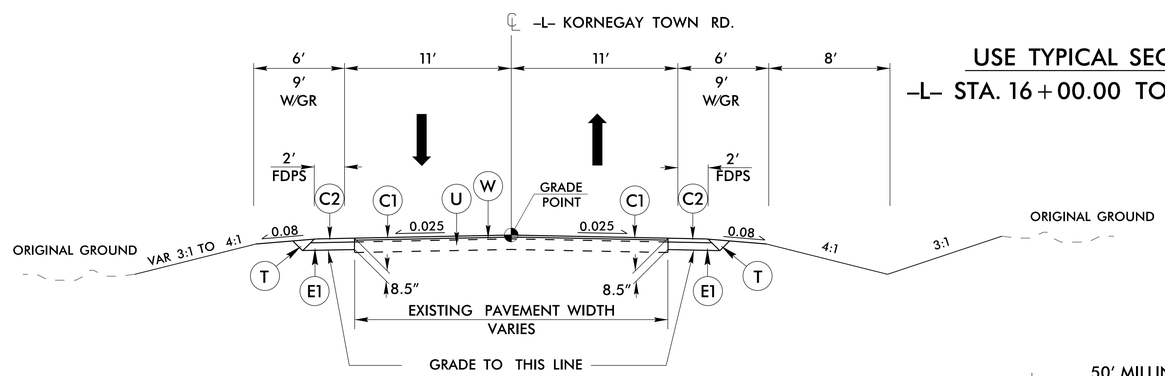

TYPICAL SECTION NO. 3

USE TYPICAL SECTION NO. 3

–L– STA. 16+00.00 TO –L– STA. 17+50.00

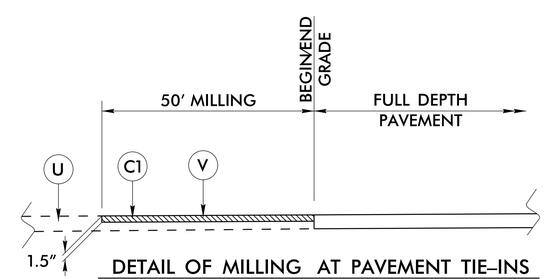

DETAIL OF MILLING AT PAVEMENT TIE–INS

–L– STA. 10+50.00 TO –L– STA. 11+00.00
–L– STA. 17+50.00 TO –L– STA. 18+00.00

02-AUG-2019 08:08
R:\Roadway\Proj\B5651_Rdy_typ.dgn
$$$$USERNAME$$$$

DocuSign Envelope ID: 616F2EEF-EE65-45E5-A032-EE01B0061212

5/14/99

PROJECT REFERENCE NO.	SHEET NO.
B-5651	2B-1

STATE OF
NORTH CAROLINA
DEPT. OF TRANSPORTATION
DIVISION OF HIGHWAYS
RALEIGH, N.C.

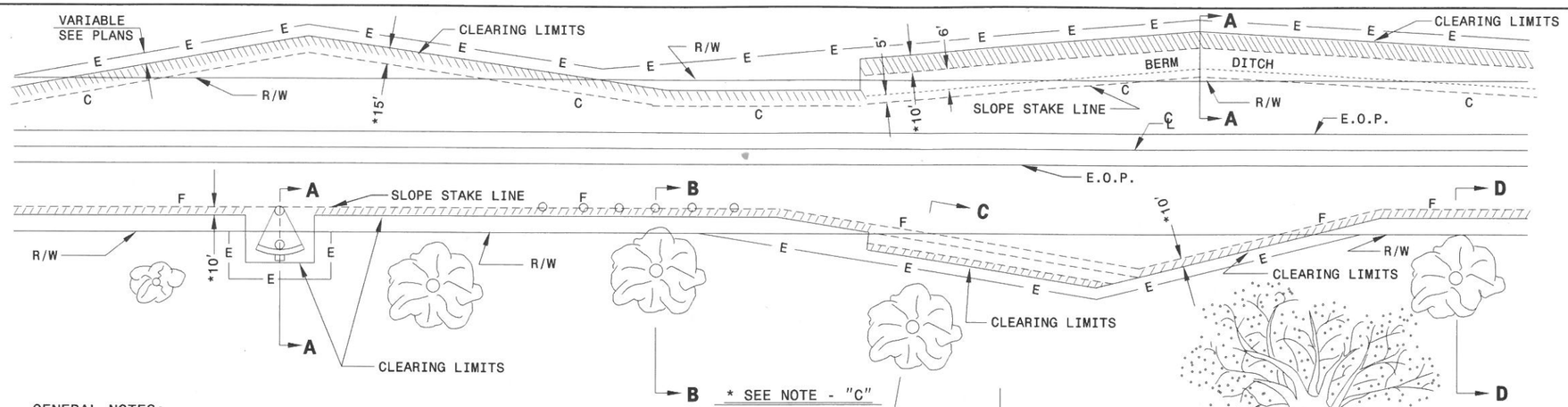

GENERAL NOTES:

1. REMOVE TREES OUTSIDE THE CLEARING LIMIT WHEN, IN THE OPINION OF THE ENGINEER, THE UTILITY OF A TREE WILL BE DESTROYED BY THE CONSTRUCTION OR THE CLEARING OPERATION.
2. CLEAR IN ACCORDANCE WITH THIS STANDARD EXCEPT WHERE ADDITIONAL CLEARING IS REQUIRED FOR SAFETY AS SHOWN ON THE PLANS.

METHOD III CLEARING LIMITS

(A) CUTS -- CLEAR TO CONSTRUCTION LIMITS.
(B) FILLS - CLEAR TO 5'/10' * BEYOND CONSTRUCTION LIMITS, UNLESS SPECIFIED OTHERWISE BY WETLAND PERMIT.
(C) CUTS AND FILLS - WHEN THE CLEARING LIMITS (A AND B) EXCEED THE PROPOSED R/W OR PROPOSED CONSTRUCTION EASEMENTS, THEN CLEAR ONLY TO THE R/W OR CONSTRUCTION EASEMENT WHICHEVER IS GREATER.

* FOR FILL HEIGHTS LESS THAN 10' CLEAR TO 5' BEYOND CONSTRUCTION LIMITS.
* FOR FILL HEIGHTS 10' OR GREATER CLEAR TO 10' BEYOND CONSTRUCTION LIMITS.
** PLACE SILT FENCE AT 5' BEYOND TOE OF SLOPE IN FILL SECTIONS WITH LESS THAN 10'.
PLACE SILT FENCE AT 10' BEYOND TOE OF SLOPE IN FILL SECTIONS WITH 10' OR GREATER.

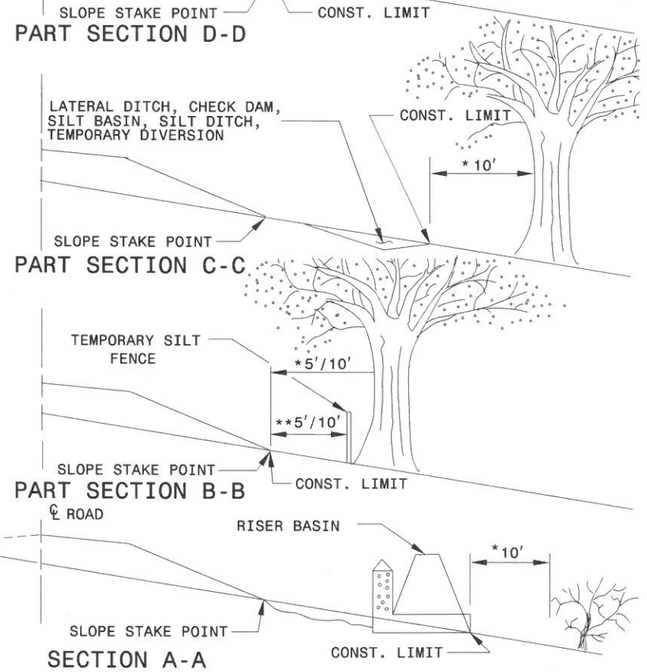

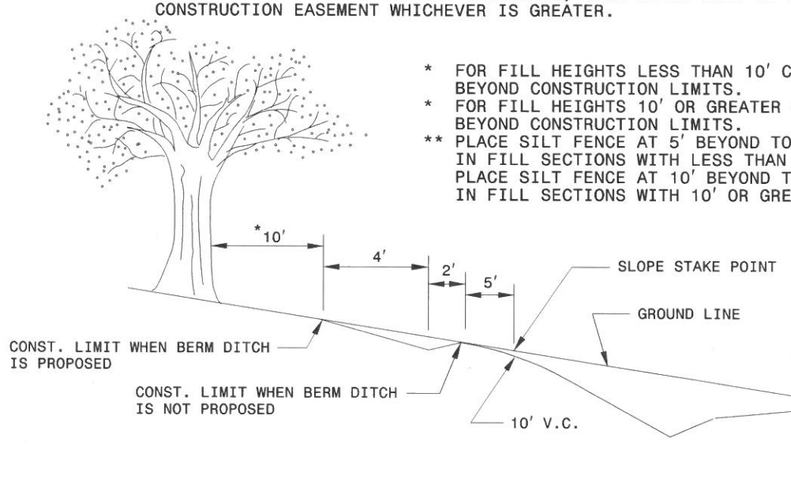

ENGLISH DETAIL DRAWING FOR
METHOD OF CLEARING
MODIFIED METHOD - III

SHEET 1 OF 1
200D03

STATE OF
NORTH CAROLINA
DEPT. OF TRANSPORTATION
DIVISION OF HIGHWAYS
RALEIGH, N.C.

ENGLISH DETAIL DRAWING FOR
METHOD OF CLEARING
MODIFIED METHOD

SHEET 1 OF 1
200D03

CONTRACT STANDARDS AND DEVELOPMENT UNIT
Office 919-707-6950 FAX 919-250-4119

SEE TITLE BLOCK

ORIGINAL BY:	T.S.S.	DATE:	FEB.2000
MODIFIED BY:	K.A.K.	DATE:	AUG.2016
CHECKED BY:		DATE:	
FILE SPEC.:	kkempf/english/0200d301.dgn		

$$$$SYSTIME$$$$
$$$$USERNAME$$$$

DocuSign Envelope ID: 61EF2EEF-EE66-45E5-A032-EE01B0061212

14-DEC-2017 10:36
S:\Contracts\Contracts\Special Details\jhowerton\Standard Drawings\2018 Standard Drawings\Details in Lieu of Standards\Division 8\0862d0301.dgn
jhowerton AT CSD-292595

STATE OF NORTH CAROLINA
DEPT. OF TRANSPORTATION
DIVISION OF HIGHWAYS
RALEIGH, N.C.

ROADWAY DETAIL DRAWING FOR
STRUCTURE ANCHOR UNITS
GUARDRAIL ANCHOR UNIT, TYPE III
FOR ATTACHMENT TO RAIL ON BRIDGE

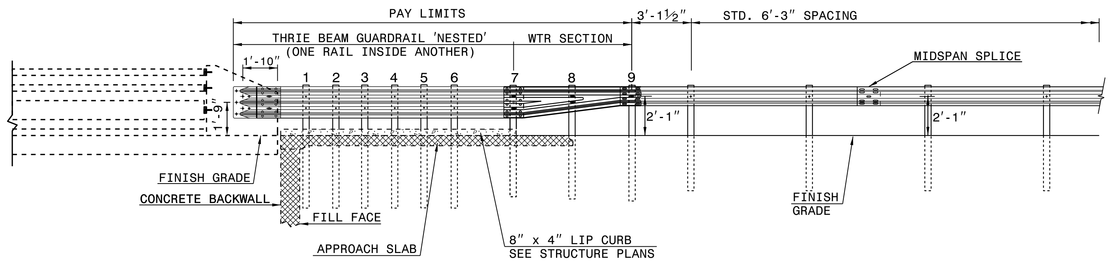

ELEVATION

NOTE:
**POST NOT REQUIRED FOR SKEW ANGLES GREATER THAN 150° OR LESS THAN 30° UNLESS OTHERWISE DIRECTED BY THE ENGINEER.
*THE DISTANCE FROM END OF BRIDGE RAIL TO CENTER LINE OF THE FIRST POST SHOULD BE 11½" IF CONCRETE BACKWALL IS NOT PRESENT.
-SHOULDER BERM GUTTER MUST BE INSTALLED TO THE LIMITS 8" x 4" LIP CURB IS SHOWN IF ANCHOR UNIT IS NOT ADJACENT TO AN APPROACH SLAB.
-MEASURE GUARDRAIL HEIGHT FROM THE TOP OF ADJACENT SURFACE (SHOULDER, BERM, OR GUTTER).
-LAP JOINTS IN THE DIRECTION OF TRAFFIC FLOW.
-SEE SHEET 3 FOR POST SECTIONS 1 THRU 9.

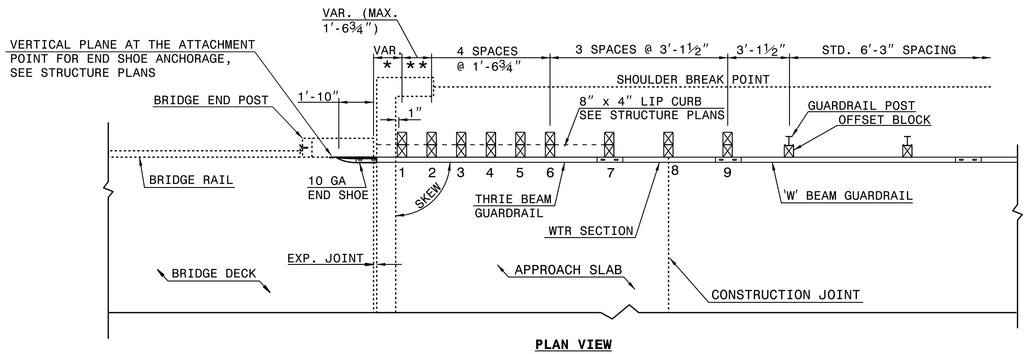

PLAN VIEW

GUARDRAIL ANCHOR UNIT, TYPE III FOR ATTACHMENT TO RAIL ON BRIDGE

SHEET 1 OF 7
862D03

STATE OF NORTH CAROLINA
DEPT. OF TRANSPORTATION
DIVISION OF HIGHWAYS
RALEIGH, N.C.

ROADWAY DETAIL DRAWING FOR
STRUCTURE ANCHOR UNITS
GUARDRAIL ANCHOR UNIT, TYPE III
FOR ATTACHMENT TO RAIL ON BRIDGE

SHEET 1 OF 7
862D03

STATE OF NORTH CAROLINA
DEPT. OF TRANSPORTATION
DIVISION OF HIGHWAYS
RALEIGH, N.C.

ROADWAY DETAIL DRAWING FOR
STRUCTURE ANCHOR UNITS
GUARDRAIL ANCHOR UNIT, TYPE III FOR ATTACHMENT TO
RAIL ON BRIDGE - SUB REGIONAL TIER

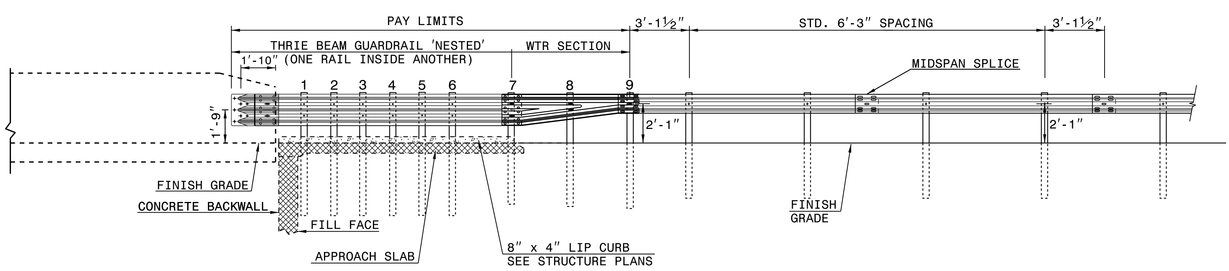

ELEVATION

NOTE:
**POST NOT REQUIRED FOR SKEW ANGLES GREATER THAN 150° OR LESS THAN 30° UNLESS OTHERWISE DIRECTED BY THE ENGINEER.
*THE DISTANCE FROM END OF BRIDGE RAIL TO CENTER LINE OF THE FIRST POST SHOULD BE 11½" IF CONCRETE BACKWALL IS NOT PRESENT.
-SHOULDER BERM GUTTER MUST BE INSTALLED TO THE LIMITS 8" x 4" LIP CURB IS SHOWN IF ANCHOR UNIT IS NOT ADJACENT TO AN APPROACH SLAB.
-MEASURE GUARDRAIL HEIGHT FROM THE TOP OF ADJACENT SURFACE (SHOULDER, BERM, OR GUTTER).
-LAP JOINTS IN THE DIRECTION OF TRAFFIC FLOW.
-SEE SHEET 3 FOR POST SECTIONS 1 THRU 9.

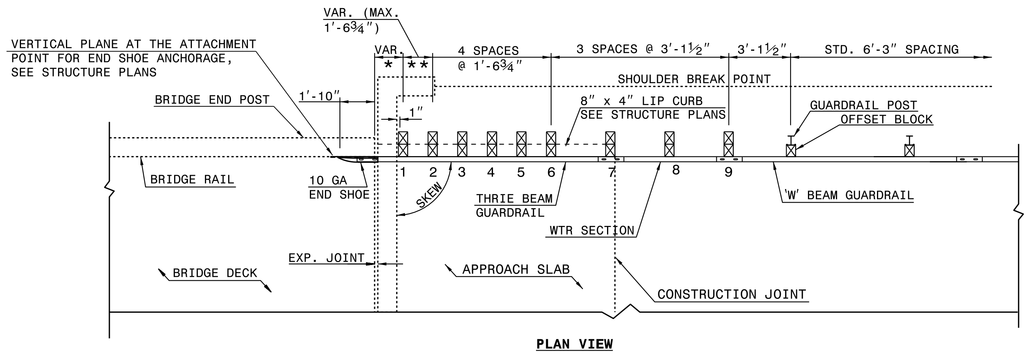

PLAN VIEW

GUARDRAIL ANCHOR UNIT, TYPE III FOR ATTACHMENT TO RAIL ON BRIDGE - SUB REGIONAL TIER

SHEET 2 OF 7
862D03

STATE OF NORTH CAROLINA
DEPT. OF TRANSPORTATION
DIVISION OF HIGHWAYS
RALEIGH, N.C.

ROADWAY DETAIL DRAWING FOR
STRUCTURE ANCHOR UNITS
GUARDRAIL ANCHOR UNIT, TYPE III FOR ATTACHMENT TO
RAIL ON BRIDGE - SUB REGIONAL TIER

SHEET 2 OF 7
862D03

SEE TITLE BLOCK

ORIGINAL BY: J. HOWERTON DATE: 06-22-12
MODIFIED BY: DATE:
CHECKED BY: DATE:
FILE SPEC.:

CONTRACT STANDARDS AND DEVELOPMENT UNIT
Office 919-707-6950 FAX 919-250-4119

DOCUMENT NOT CONSIDERED FINAL UNLESS ALL SIGNATURES COMPLETED

5/16/2019

PROJECT REFERENCE NO. B-5651
SHEET NO. 2C-1

DocuSign Envelope ID: 616F2EEF-EE65-45E5-A032-EE01B0061212

PROJECT REFERENCE NO.	SHEET NO.
B-5651	2C-2

DOCUMENT NOT CONSIDERED FINAL UNLESS ALL SIGNATURES COMPLETED

STATE OF NORTH CAROLINA
DEPT. OF TRANSPORTATION
DIVISION OF HIGHWAYS
RALEIGH, N.C.

ROADWAY DETAIL DRAWING FOR
GUARDRAIL INSTALLATION

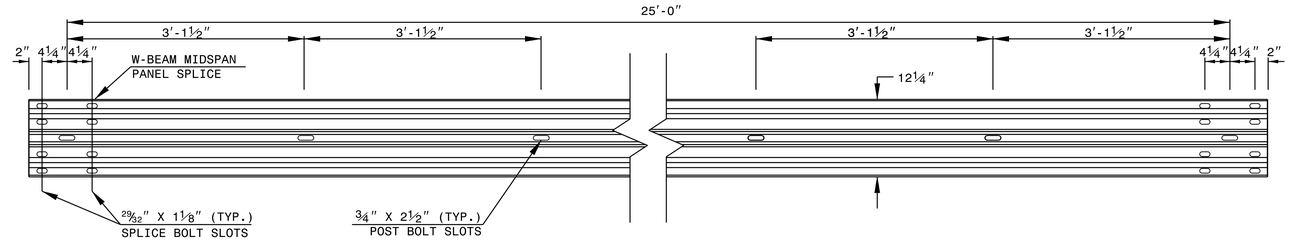

STANDARD W-BEAM GUARDRAIL

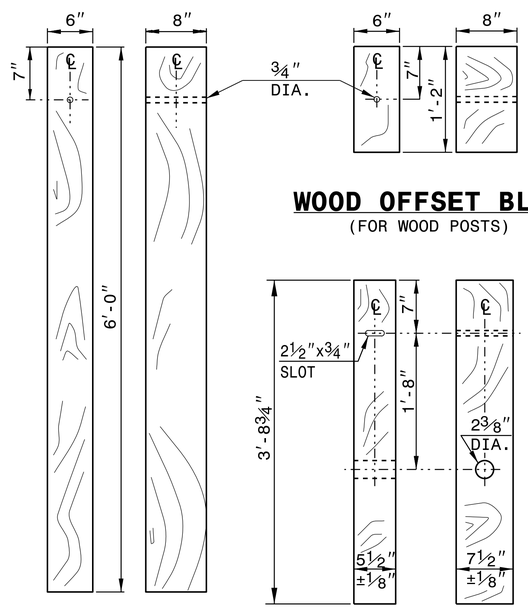

STANDARD LINE POST

WOOD OFFSET BLOCK
(FOR WOOD POSTS)

SHORT WOOD BREAKAWAY POST

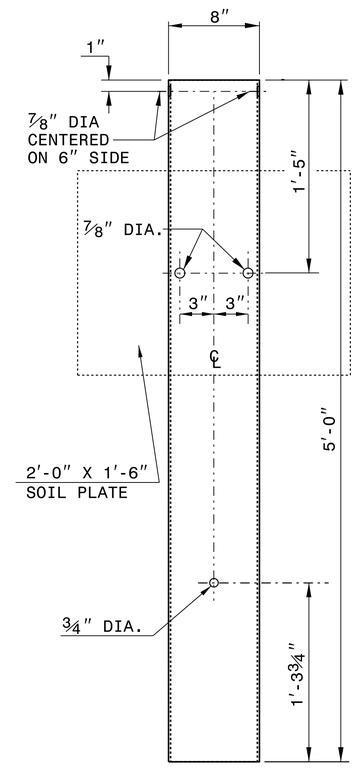

STEEL TUBE
TS 6"x8"x0.1875"

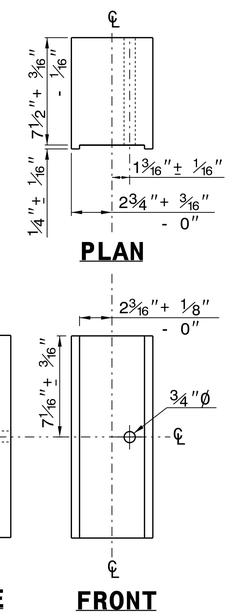

ROUTED OFFSET BLOCK

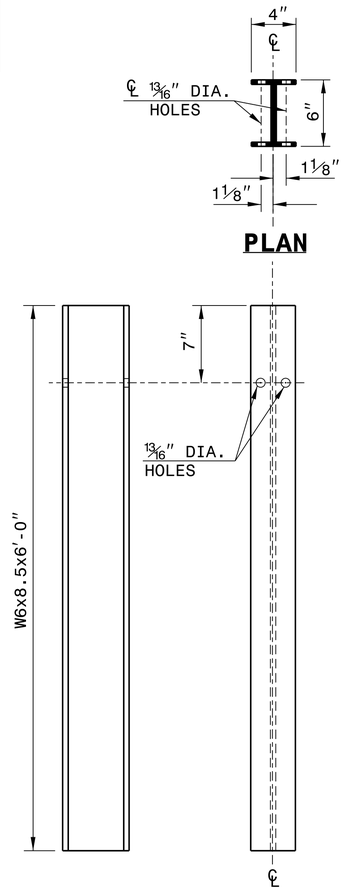

"W6" STEEL POST

SYSTEM PARTS

SHEET 6 OF 8
862D02

STATE OF NORTH CAROLINA
DEPT. OF TRANSPORTATION
DIVISION OF HIGHWAYS
RALEIGH, N.C.

ROADWAY DETAIL DRAWING FOR
GUARDRAIL INSTALLATION

SHEET 6 OF 8
862D02

NORTH CAROLINA PROFESSIONAL ENGINEER SEAL 022966 JOEL S. HOWERTON
5/16/2019

CONTRACTS STANDARDS AND DEVELOPMENT UNIT
Office 919-707-6950 FAX 919-250-4119

SEE TITLE BLOCK

ORIGINAL BY: J.HOWERTON DATE: 3-7-2018
MODIFIED BY: DATE:
CHECKED BY: DATE:
FILE SPEC.:

DocuSign Envelope ID: 616F2EEF-EE65-45E5-A032-EE01B0061212

12/06/07

COMPUTED BY: MLK	DATE: 11/13/2018
CHECKED BY: CJY	DATE: 11/15/2018

STATE OF NORTH CAROLINA
DIVISION OF HIGHWAYS

PROJECT REFERENCE NO.	SHEET NO.
B-5651	3B-1

SUMMARY OF EARTHWORK

STATION	STATION	UNCL. EXCAV.	EMBANK. (+%)	BORROW	WASTE
11+00.00	14+28.81	516	54		462
15+11.19	17+50.00	73	54		19
SUBTOTALS:		589	107		481
TOTALS:		589	107		481
PROJECT TOTALS:		589	107		481
EST. 5% TO REPLACE SOIL IN BORROW PIT					
GRAND TOTALS:		589	107		481
SAY:		650			

PAVEMENT REMOVAL SUMMARY

SURVEY LINE	STATION	STATION	LOCATION LT/RT/CL	SQUARE YARDS
-L-	11+00.00	14+33.34	CL	765.90
-L-	15+08.01	16+00.00	CL	210.10
			TOTAL:	976.00
			SAY:	980.00

SHOULDER BERM GUTTER SUMMARY

SURVEY LINE	STATION	STATION	LENGTH
-L-	13+55.25	14+17.94	62.69
		TOTAL:	62.69
		SAY:	70.00

LIST OF PIPES, ENDWALLS, ETC. (FOR PIPES 48" & UNDER)

STATION	LOCATION (LT,RT, OR CL)	STRUCTURE NO. FROM	STRUCTURE NO. TO	TOP ELEVATION	INVERT ELEVATION	INVERT ELEVATION	SLOPE CRITICAL	DRAINAGE PIPE (RCP, CSP, CAAP, HDPE, or PVC) 12"	15"	18"	24"	30"	36"	42"	48"	C.S. PIPE (UNLESS NOTED OTHRWISE) 12"	15"	18"	24"	30"	36"	42"	48"
SIZE / THICKNESS OR GAUGE																.064	.064	.064	.064	.079	.079	.109	.109
-L- 14+08.00	15 LT	0401		144.10																			
		0401	0402		142.18	142.10																	
TOTALS																							

STATION	CLASS III R.C. PIPE (UNLESS OTHERWISE NOTED) 12"	15"	18"	24"	30"	36"	42"	48"	15" SIDE DRAIN PIPE	18" SIDE DRAIN PIPE	24" SIDE DRAIN PIPE	ENDWALLS STD. 838.01, STD. 838.11 OR STD. 838.80 (UNLESS NOTED OTHERWISE) CU. YDS. R.C.P.	C.S.P.	QUANTITIES FOR DRAINAGE STRUCTURES * TOTAL L.F. FOR PAY QUANTITY SHALL BE COL. "A" + (1.3 X COL. "B") PER EACH (0' THRU 5.0')	LIN. *FT. A (5.0' THRU 10.0')	B (10.0' AND ABOVE)	C.B. STD. 840.01 OR STD. 840.02	FRAME, GRATES AND HOOD STANDARD 840.03 TYPE OF GRATE E	F	G	D.I. STD. 840.14 OR STD. 840.15	D.I. FRAME & GRATE STD. 840.16	G.D.I. TYPE "A" STD. 840.17 OR 840.26	G.D.I. TYPE "B" STD. 840.18 OR 840.27	G.D.I. TYPE "D" STD. 840.19 OR 840.28	G.D.I. FRAME WITH GRATE STD. 840.22	G.D.I. FRAME WITH TWO GRATES STD. 840.22	G.D.I. (N.S.) FRAME WITH GRATE STD. 840.24	G.D.I. (N.S.) FRAME WITH TWO GRATES STD. 840.24	T.B.G.D.I. STD. 840.35	15" CORR. STEEL ELBOW	FRAMES AND TWO NARROW SLOT FLAT GRATES STD. 840.29	CONC. COLLARS CL. "B" C.Y. STD 840.72	CONC. & BRICK PIPE PLUG, C.Y. STD. 840.71	PIPE REMOVAL LIN.FT.	REMARKS
-L- 14+08.00		12												1								1		1									
TOTALS		12												1								1		1									

"N" = DISTANCE FROM EDGE OF LANE TO FACE OF GUARDRAIL.
TOTAL SHOULDER WIDTH = DISTANCE FROM EDGE OF TRAVEL LANE TO SHOULDER BREAK POINT.
FLARE LENGTH = DISTANCE FROM LAST SECTION OF PARALLEL GUARDRAIL TO END OF GUARDRAIL.
W = TOTAL WIDTH OF FLARE FROM BEGINNING OF TAPER TO END OF GUARDRAIL.
G = GATING IMPACT ATTENUATOR TYPE 350
NG = NON-GATING IMPACT ATTENUATOR TYPE 350

ABBREVIATIONS

C.B.	CATCH BASIN
N.D.I.	NARROW DROP INLET
D.I.	DROP INLET
G.D.I.	GRATED DROP INLET
G.D.I. (N.S.)	GRATED DROP INLET (NARROW SLOT)
J.B.	JUNCTION BOX
M.H.	MANHOLE
T.B.D.I.	TRAFFIC BEARING DROP INLET
T.B.J.B.	TRAFFIC BEARING JUNCTION BOX

GUARDRAIL SUMMARY

SURVEY LINE	BEG. STA.	END STA.	LOCATION	LENGTH STRAIGHT	SHOP CURVED	DOUBLE FACED	WARRANT POINT APPROACH END	TRAILING END	"N" DIST. FROM E.O.L.	TOTAL SHOUL. WIDTH	FLARE LENGTH APPROACH END	TRAILING END	W APPROACH END	TRAILING END	ANCHORS TYPE III	TL-3	IMPACT ATTENUATOR TYPE 350 EA	G	NG	SINGLE FACED GUARDRAIL	REMOVE EXISTING GUARDRAIL	REMOVE AND STOCKPILE EXISTING GUARDRAIL	REMARKS
-L-	12+97.56	14+28.81		131.25				14+28.81 (BR)	4.42	9.00		50.00'		1	1	1							GUARDRAIL CALCULATED USING SUBREGIONAL TIER GUIDELINES
-L-	15+11.19	15+92.44	LT	81.25			15+11.19 (BR)		4.42	9.00	50.00'		1		1	1							GUARDRAIL CALCULATED USING SUBREGIONAL TIER GUIDELINES
-L-	13+47.56	14+28.81	RT	81.25			14+28.81 (BR)		4.42	9.00	50.00'		1		1	1							GUARDRAIL CALCULATED USING SUBREGIONAL TIER GUIDELINES
-L-	15+11.19	15+92.44	RT	81.25				15+11.19 (BR)	4.42	9.00		50.00'		1	1	1							GUARDRAIL CALCULATED USING SUBREGIONAL TIER GUIDELINES
			SUBTOTALS	375.00																			
			ANCHOR DEDUCTION	275.00																			
			TOTAL	100.00																			
			SAY	112.50																			

ANCHOR DEDUCTION
TYPE III: 4 @ 18.75' = 75'
TYPE TL-3: 4 @ 50' = 200'
GRAND TOTAL = 275.00
ADDITIONAL GUARDRAIL POSTS = 5

08-MAY-2019 JH:01
R:\Roadway\Proj\B5651_Rdy_sum.dgn
$$$$USERNAME$$$$

DocuSign Envelope ID: 616F2EEF-EE65-45E5-A032-EE01B0061212

8/17/99

PROJECT REFERENCE NO.	SHEET NO.
B-5651	4
R/W SHEET NO.	
ROADWAY DESIGN ENGINEER	HYDRAULICS ENGINEER

NORTH CAROLINA PROFESSIONAL SEAL 046062 ENGINEER CHARLES J. YOUNG — 8/2/2019

NORTH CAROLINA PROFESSIONAL SEAL 18442 ENGINEER RICHARD LEON BOLLINGER — 8/5/2019

DOCUMENT NOT CONSIDERED FINAL UNLESS ALL SIGNATURES COMPLETED

RS&H

NAD 83/NSRS 2007

-L- CURVE DATA
PI Sta 11+96.37
△ = 11° 11' 11.1" (LT)
D = 3° 49' 11.0"
L = 292.86'
T = 146.90'
R = 1,500.00'
SE = 04
RO = SEE PLANS
V = 60 MPH

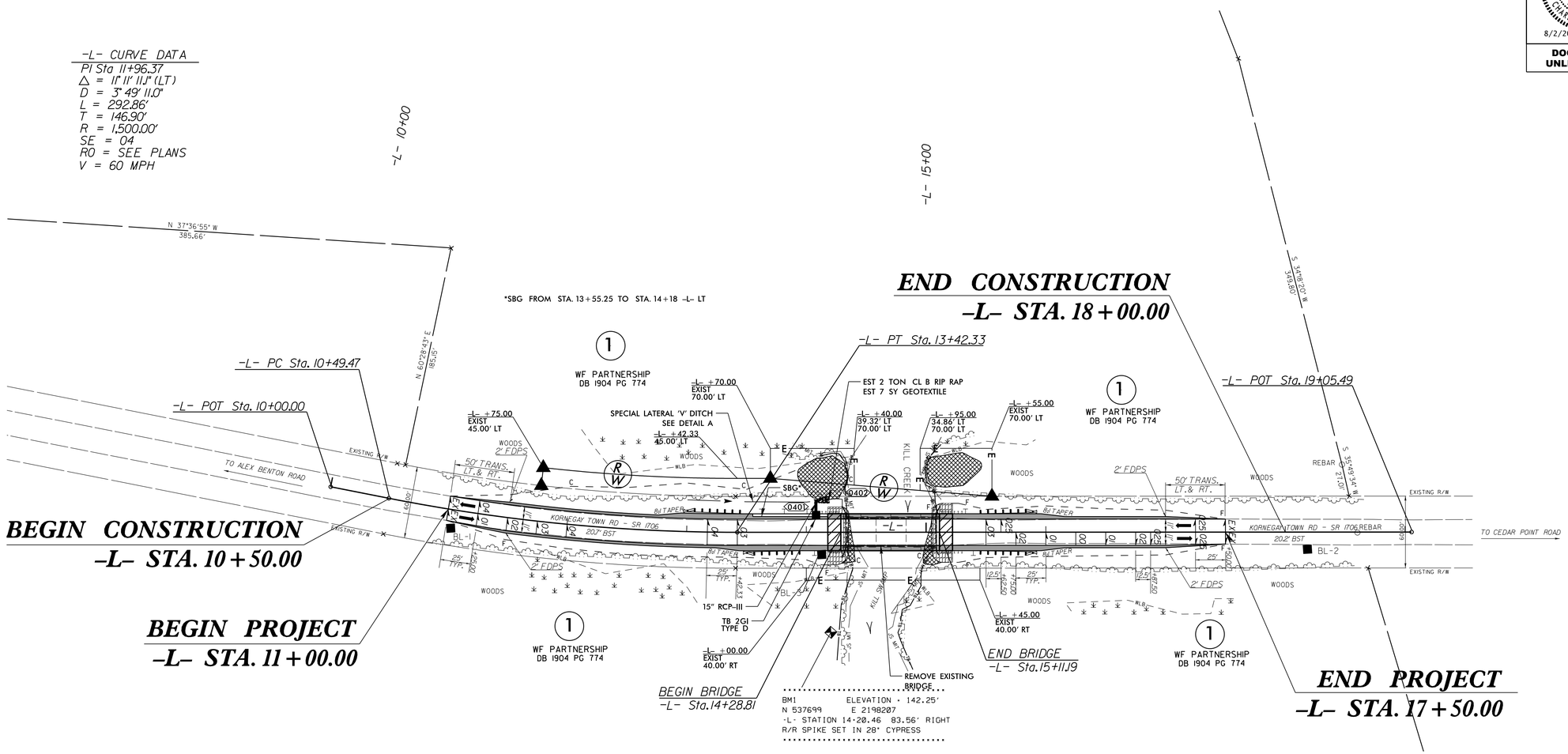

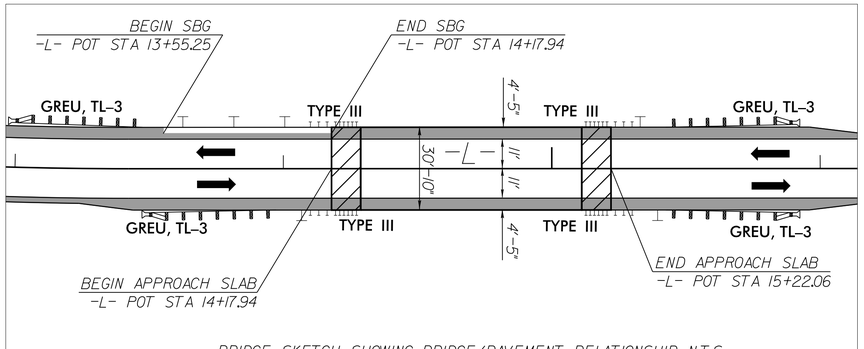

BRIDGE SKETCH SHOWING BRIDGE/PAVEMENT RELATIONSHIP N.T.S.

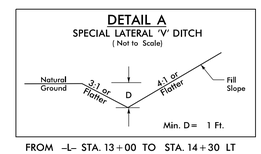

FROM -L- STA. 13+00 TO STA. 14+30 LT

EXCAVATION FOR BRIDGE
BRIDGE APPROACH SLAB

FOR -L- PROFILE SEE SHEET 5

FOR STRUCTURE PLANS, SEE SHEET S-1 THRU S-17

02-AUG-2019 08:15
R:\Roadway\Proj\B5651_Rdy_psh_4.dgn
$$USERNAME$$

DocuSign Envelope ID: 616F2EEF-EE65-45E5-A032-EE01B0061212

5/28/99

PROJECT REFERENCE NO.	SHEET NO.
B-5651	5

ROADWAY DESIGN ENGINEER

NORTH CAROLINA PROFESSIONAL SEAL 046062 ENGINEER CHARLES L. YOUNG
8/2/2019

HYDRAULICS ENGINEER

NORTH CAROLINA PROFESSIONAL SEAL 18442 ENGINEER LEON BOLLINGER III
8/5/2019

DOCUMENT NOT CONSIDERED FINAL UNLESS ALL SIGNATURES COMPLETED

RS&H

BRIDGE HYDRAULIC DATA

DRAINAGE AREA	= 7.6	SQ.MI.
DESIGN DISCHARGE	= 830	CFS
DESIGN FREQUENCY	= 25	YRS
DESIGN HW ELEVATION	= 142.9	FT
BASE DISCHARGE	= 1300	CFS
BASE FREQUENCY	= 100	YRS
BASE HW ELEVATION	= 145.1	FT
OVERTOPPING DISCHARGE	= 1260	CFS
OVERTOPPING FREQUENCY	= 50+	YRS
OVERTOPPING ELEVATION	= 144.8	FT

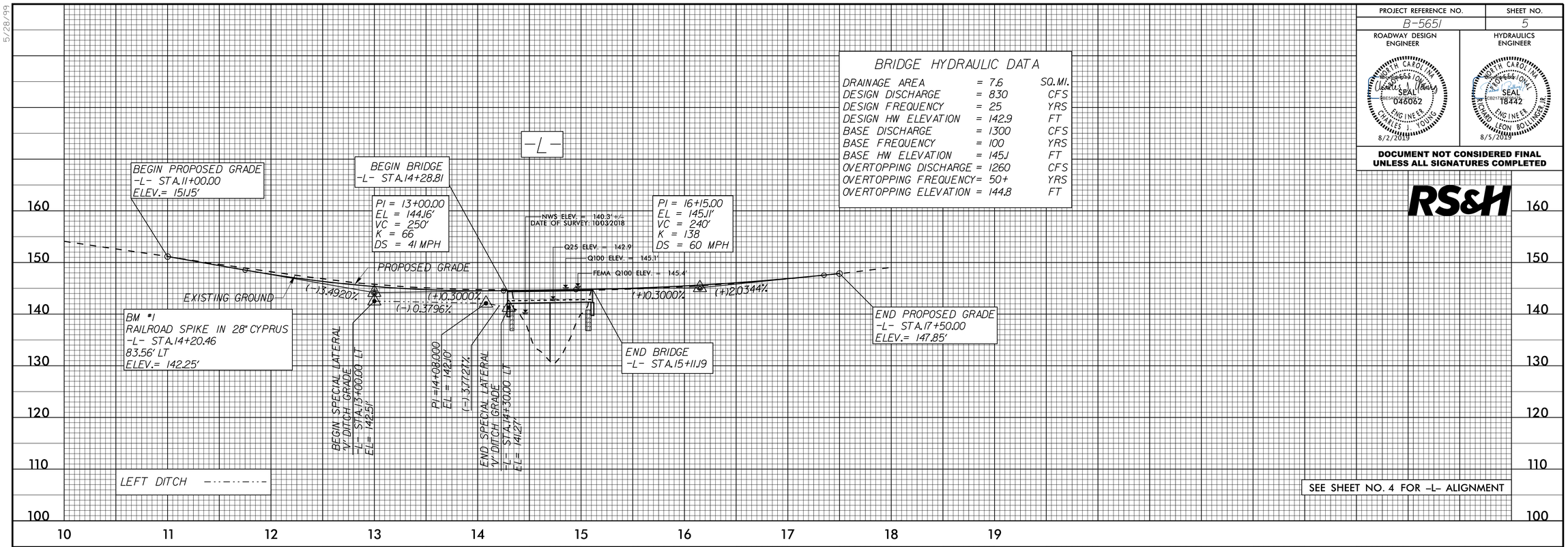

SEE SHEET NO. 4 FOR -L- ALIGNMENT

HORIZ. SCALE 1" = 50'
VERT. SCALE 1" = 10'

02-AUG-2019 08:16
R:\Roadway\Proj\B5651_Rdy_pfl_5.dgn
$$$$USERNAME$$$$

DocuSign Envelope ID: 616F2EEF-EE65-45E5-A032-EE01B0061212

STATE OF NORTH CAROLINA
DIVISION OF HIGHWAYS

TRANSPORTATION MANAGEMENT PLAN

SAMPSON COUNTY

LOCATION: BRIDGE NO. 214 OVER KILL CREEK ON SR 1706 (KORNEGAY TOWN RD.)

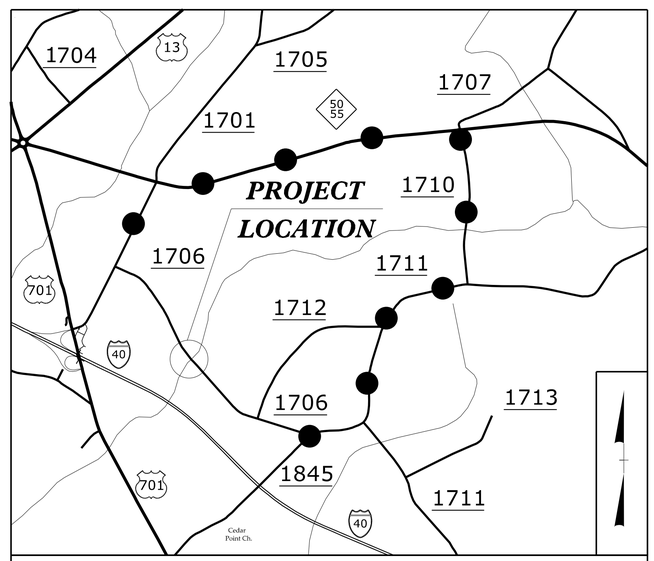

DETOUR

VICINITY MAP N.T.S

INDEX OF SHEETS

SHEET NO.	TITLE
TMP-1	TITLE SHEET, VICINITY MAP, AND INDEX OF SHEETS
TMP-1A	LIST OF APPLICABLE ROADWAY STANDARD DRAWINGS, AND LEGEND
TMP-1B	TRANSPORTATION OPERATIONS PLAN: MANAGEMENT STRATEGY AND GENERAL NOTES
TMP-2	KORNEGAY TOWN ROAD SIGN DESIGN
TMP-2A	KORNEGAY TOWN ROAD SIGN DETOUR

SHEET NO.
TMP-1

TIP PROJECT: B-5651

DOCUMENT NOT CONSIDERED FINAL UNLESS ALL SIGNATURES COMPLETED

WORK ZONE SAFETY & MOBILITY
"from the MOUNTAINS to the COAST"

PLANS PREPARED BY:

ANNIE C. PILZ, PE
PROJECT ENGINEER

MAILE L. KAWAHAKUI, EI
PROJECT DESIGN ENGINEER

NCDOT CONTACTS:

DAVID LEONARD, PE
DIVISION PROJECT TEAM LEAD

DIVISION OF HIGHWAYS · STATE OF NORTH CAROLINA · DEPARTMENT OF TRANSPORTATION · WORK ZONE TRAFFIC CONTROL

RS&H

APPROVED: DocuSigned by: Annie C. Pilz
DATE: 5/16/2019

NORTH CAROLINA PROFESSIONAL SEAL 038700 ENGINEER ANNIE C. PILZ

3/20/2019
R:\Traffic\TrafficControl\TCP\B5651_tmp_tsh.dgn
User:YoungCJ

DocuSign Envelope ID: 616F2EEF-EE65-45E5-A032-EE01B0061212

PROJ. REFERENCE NO.	SHEET NO.
B-5651	TMP-1A

ROADWAY STANDARD DRAWINGS

THE FOLLOWING ROADWAY STANDARDS AS SHOWN IN "ROADWAY STANDARD DRAWINGS" - N.C. DEPARTMENT OF TRANSPORTATION - RALEIGH, N.C., DATED JANUARY 2018 ARE APPLICABLE TO THIS PROJECT AND BY REFERENCE HEREBY ARE CONSIDERED A PART OF THESE PLANS:

STD. NO.	TITLE
1101.03	TEMPORARY ROAD CLOSURES
1101.11	TRAFFIC CONTROL DESIGN TABLES
1110.01	STATIONARY WORK ZONE SIGNS
1145.01	BARRICADES

LEGEND

GENERAL

- DIRECTION OF TRAFFIC FLOW
- DIRECTION OF PEDESTRIAN TRAFFIC FLOW
- EXIST. PVMT.
- NORTH ARROW
- PROPOSED PVMT.
- TEMP. SHORING (LOCATION PURPOSES ONLY)
- WORK AREA
- REMOVAL

SIGNALS

- EXISTING
- PROPOSED
- TEMPORARY

PAVEMENT MARKINGS

- EXISTING LINES
- TEMPORARY LINES

TRAFFIC CONTROL DEVICES

- BARRICADE (TYPE III)
- CONE
- DRUM
- SKINNY DRUM
- TUBULAR MARKER
- TEMPORARY CRASH CUSHION
- FLASHING ARROW BOARD
- FLAGGER
- LAW ENFORCEMENT
- TRUCK MOUNTED ATTENUATOR (TMA)
- CHANGEABLE MESSAGE SIGN

TEMPORARY SIGNING

- PORTABLE SIGN
- STATIONARY SIGN
- STATIONARY OR PORTABLE SIGN

PAVEMENT MARKERS

- CRYSTAL/CRYSTAL
- CRYSTAL/RED
- YELLOW/YELLOW

PAVEMENT MARKING SYMBOLS

- PAVEMENT MARKING SYMBOLS

RS&H

APPROVED: Annie C. Pilz (DocuSigned by: 5F9BC0DEB3D94E...)

DATE: 5/16/2019

NORTH CAROLINA PROFESSIONAL SEAL 038700 ENGINEER ANNIE C. PILZ

DOCUMENT NOT CONSIDERED FINAL UNLESS ALL SIGNATURES COMPLETED

DIVISION OF HIGHWAYS · STATE OF NORTH CAROLINA · DEPARTMENT OF TRANSPORTATION · WORK ZONE TRAFFIC CONTROL

ROADWAY STANDARD DRAWINGS & LEGEND

3/20/2019
R:\Traffic\TrafficControl\TCP\B5651_tmp_1A.dgn
User:YoungCJ

DocuSign Envelope ID: 616F2EEF-EE65-45E5-A032-EE01B0061212

PROJ. REFERENCE NO.	SHEET NO.
B-5651	TMP-1B

MANAGEMENT STRATEGIES

THE PROPOSED STRUCTURE (BR. NO. 810214 OVER KILL SWAMP) AND ROADWAY ON -L- SR 1706 (KORNEGAY TOWN RD.) WILL BE CONSTRUCTED UTILIZING ROAD CLOSURES AND ON OFFSITE DETOUR ALONG CEDAR POINT ROAD (SR 1845), WILLIAM R. KING ROAD (SR 1711), EMMET THORNTON ROAD (SR 1710), NC 50/55, AND ALEX BENTON ROAD (SR 1701).

GENERAL NOTES

CHANGES MAY BE REQUIRED WHEN PHYSICAL DIMENSIONS IN THE DETAIL DRAWINGS, STANDARD DETAILS, AND ROADWAY DETAILS ARE NOT ATTAINABLE TO MEET FIELD CONDITIONS OR RESULT IN DUPLICATE OR UNDESIRED OVERLAPPING OF DEVICES. MODIFICATION MAY INCLUDE: MOVING, SUPPLEMENTING, COVERING, OR REMOVAL OF DEVICES AS DIRECTED BY THE ENGINEER.

THE FOLLOWING GENERAL NOTES APPLY AT ALL TIMES FOR THE DURATION OF THE CONSTRUCTION PROJECT EXCEPT WHEN OTHERWISE NOTED IN THE PLAN OR DIRECTED BY THE ENGINEER.

TRAFFIC PATTERN ALTERATIONS

A) NOTIFY THE ENGINEER THIRTY (30) CALENDAR DAYS PRIOR TO ANY TRAFFIC PATTERN ALTERATION.

SIGNING

B) PROVIDE SIGNING AND DEVICES REQUIRED TO CLOSE THE ROAD ACCORDING TO THE ROADWAY STANDARD DRAWINGS AND TRAFFIC CONTROL PLANS.

PROVIDE SIGNING REQUIRED FOR THE OFF-SITE DETOUR ROUTE AS SHOWN IN THE TRAFFIC CONTROL PLANS.

C) COVER OR REMOVE ALL SIGNS AND DEVICES REQUIRED TO CLOSE THE ROAD WHEN ROAD CLOSURE IS NOT IN OPERATION.

COVER OR REMOVE ALL SIGNS REQUIRED FOR THE OFF-SITE DETOUR WHEN THE DETOUR IS NOT IN OPERATION.

D) ENSURE ALL NECESSARY SIGNING IS IN PLACE PRIOR TO ALTERING ANY TRAFFIC PATTERN.

TRAFFIC CONTROL DEVICES

E) PLACE TYPE III BARRICADES, WITH "ROAD CLOSED" SIGN R11-2 ATTACHED, OF SUFFICIENT LENGTH TO CLOSE ENTIRE ROADWAY.

RS&H

APPROVED: Annie C. Pilz (DocuSigned by:)

DATE: 5/16/2019

NORTH CAROLINA PROFESSIONAL SEAL 038700 ENGINEER ANNIE C. PILZ

DOCUMENT NOT CONSIDERED FINAL UNLESS ALL SIGNATURES COMPLETED

DIVISION OF HIGHWAYS · STATE OF NORTH CAROLINA · DEPARTMENT OF TRANSPORTATION · WORK ZONE TRAFFIC CONTROL

MANAGEMENT STRATEGY AND GENERAL NOTES

3/20/2019
R:\Traffic\TrafficControl\TCP\B5651_tmp_GN.dgn
User:YoungCJ

DocuSign Envelope ID: 616F2EEF-EE65-45E5-A032-EE01B0061212

PROJ. REFERENCE NO.	SHEET NO.
B-5651	TMP-2

SIGN NUMBER: Kornegay Town Road
TYPE: STATIONARY
QUANTITY: SEE PLANS

BACKG COLOR: Fluorescent Orange
COPY COLOR: Black

SYMBOL	X	Y	WID	HT

MAT'L: 0.080" (2.0 mm) ALUMINUM

SIGN WIDTH: 2'-6"
HEIGHT: 2'-6"
TOTAL AREA: 6.3 Sq.Ft.

BORDER TYPE: INSET
RECESS: 0.5"
WIDTH: 0.75"
RADII: 1.88"

NO. Z BARS:
LENGTH:

USE NOTES: 1,2

1. Legend and border shall be direct applied black non-reflective sheeting.
2. Background shall be NC GRADE B fluorescent orange retroreflective sheeting.

DESIGN BY: MLK
PROJECT ID: 810214

CHECKED BY: ACP
LOCATION: SAMPSON

Nov 15, 2018
DIV: 3

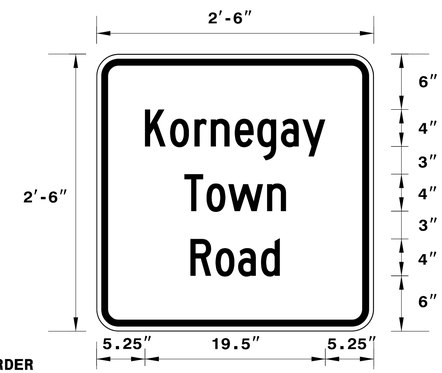

BORDER
R=1.88"
TH=0.75"
IN=0.5"

Spacing Factor is 1 unless specified otherwise

LETTER POSITIONS

Letter spacings are to start of next letter

																										Series/Size Text Length
		K	o	r	n	e	g	a	y																	C 2000
	5.2	2.7	2.6	1.8	2.6	2.4	2.6	2.3	2.5	5.2																19.5
		T	o	w	n																					C 2000
	9.5	2.4	2.4	4.2	2	9.5																				11
		R	o	a	d																					C 2000
	10.2	2.7	2.4	2.5	2	10.2																				9.7

FILENAME: B5651_tmp_sign_design

NORTH CAROLINA D.O.T. SIGN DETAIL

RS&H

APPROVED: DocuSigned by: Annie C. Pilz
DATE: 5/16/2019

NORTH CAROLINA PROFESSIONAL SEAL 038700 ENGINEER ANNIE C. PILZ

DOCUMENT NOT CONSIDERED FINAL UNLESS ALL SIGNATURES COMPLETED

DIVISION OF HIGHWAYS · STATE OF NORTH CAROLINA · DEPARTMENT OF TRANSPORTATION · WORK ZONE TRAFFIC CONTROL

KORNEGAY TOWN ROAD
SIGN DESIGN

3/20/2019
R:\Traffic\TrafficControl\TCP\B5651_tmp_sign_design.dgn
User:YoungCJ

DocuSign Envelope ID: 616F2EEF-EE65-45E5-A032-EE01B0061212

PROJ. REFERENCE NO.	SHEET NO.
B-5651	TMP-2A

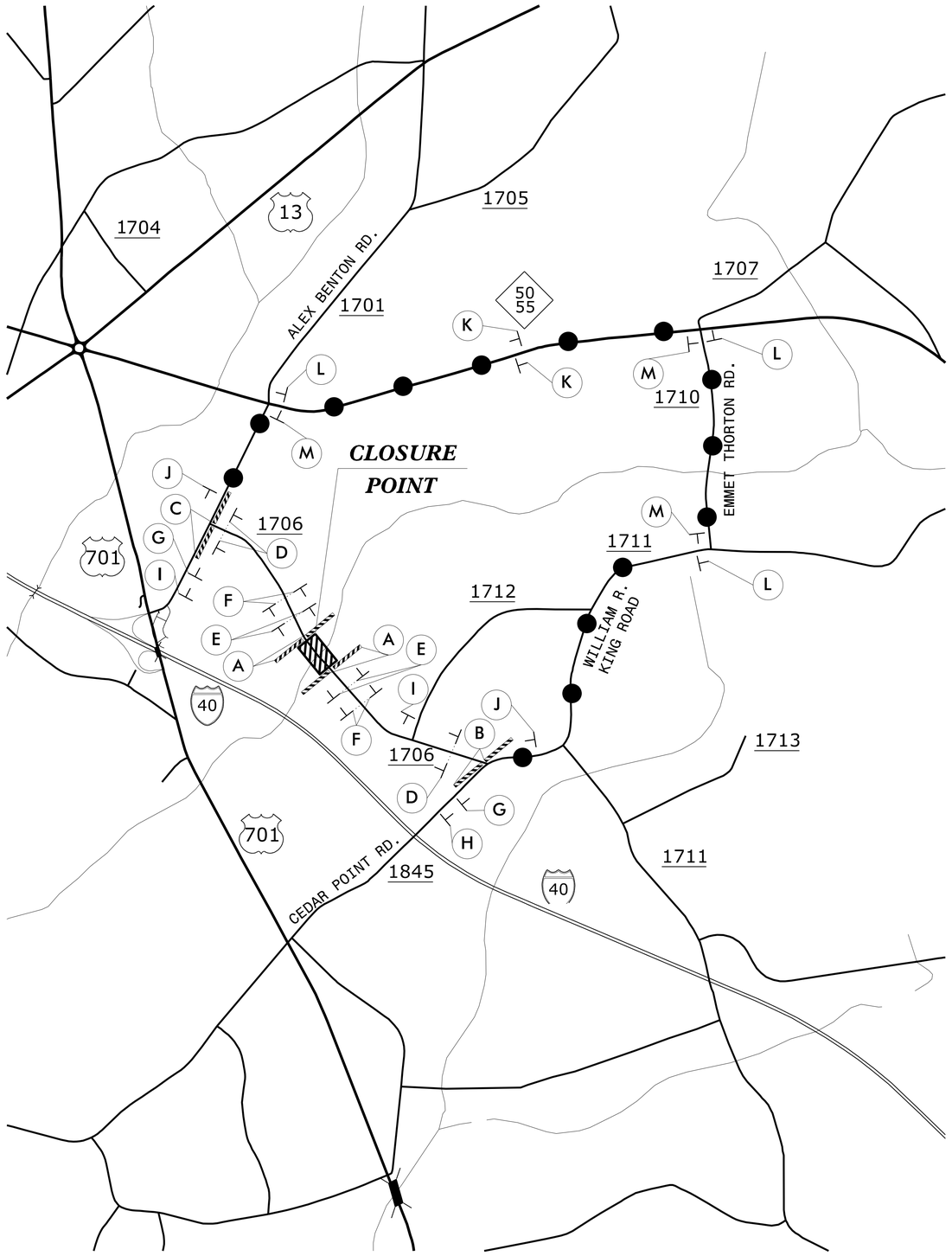

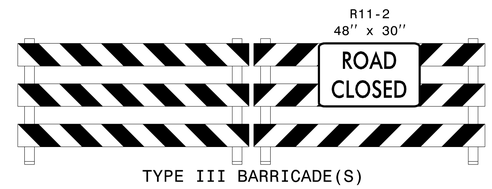

TYPE III BARRICADE(S)

A

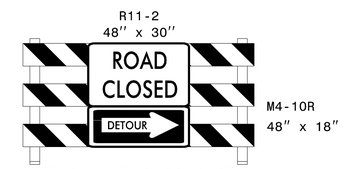

TYPE III BARRICADE

B

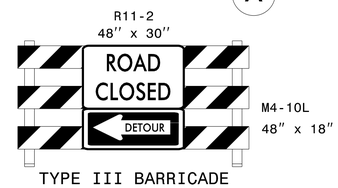

TYPE III BARRICADE

C

D

E

F

G

NEXT LEFT SP-4L 42" X 12"

H

NEXT RIGHT SP-4R 42" X 12"

I

END DETOUR M4-8 A 24" X 18"

J

M6-3 21" X 15"

K

M6-1 L 21" X 15"

L

M6-1 21" X 15"

M

RS&H

APPROVED: Annie C. Pilz

DATE: 5/16/2019

NORTH CAROLINA PROFESSIONAL SEAL 038700 ENGINEER ANNIE C. PILZ

DOCUMENT NOT CONSIDERED FINAL UNLESS ALL SIGNATURES COMPLETED

DIVISION OF HIGHWAYS STATE OF NORTH CAROLINA DEPARTMENT OF TRANSPORTATION WORK ZONE TRAFFIC CONTROL

KORNEGAY TOWN ROAD DETOUR

3/20/2019
R:\Traffic\TrafficControl\TCP\B5651_tmp_detour.dgn
User:YoungCJ

DocuSign Envelope ID: 616F2EEF-EE65-45E5-A032-EE01B0061212

T.I.P.: B-5651

TIP NO.	SHEET NO.
B-5651	PMP-1

APPROVED: Annie C. Pilz (DocuSigned by: 52F8BC0DE83C48E...)

DATE: 5/16/2019

SEAL

NORTH CAROLINA PROFESSIONAL SEAL 038700 ENGINEER ANNIE C. PILZ

DOCUMENT NOT CONSIDERED FINAL UNLESS ALL SIGNATURES COMPLETED

STATE OF NORTH CAROLINA
DEPARTMENT OF TRANSPORTATION

PAVEMENT MARKING PLAN
SAMPSON COUNTY

INDEX

SHEET NO.	DESCRIPTION
PMP-1	PAVEMENT MARKING PLAN TITLE SHEET AND PAVEMENT MARKING SCHEDULE
PMP-2	PAVEMENT MARKING DETAIL

ROADWAY STANDARD DRAWING

THE FOLLOWING ROADWAY STANDARDS AS APPEAR IN "ROADWAY STANDARD DRAWINGS" - PROJECT SERVICES UNIT - N.C. DEPARTMENT OF TRANSPORTATION - RALEIGH, N.C., DATED JANUARY 2018 ARE APPLICABLE TO THIS PROJECT AND BY REFERENCE HEREBY ARE CONSIDERED A PART OF THESE PLANS:

STD. NO.	TITLE
1205.01	PAVEMENT MARKINGS - LINE TYPES AND OFFSETS
1205.02	PAVEMENT MARKINGS - TWO-LANE AND MULTILANE ROADWAYS
1205.12	PAVEMENT MARKINGS - BRIDGES
1250.01	RAISED PAVEMENT MARKERS - INSTALLATION SPACING
1251.01	RAISED PAVEMENT MARKERS - PERMANENT AND TEMPORARY
1261.01	GUARDRAIL AND BARRIER DELINEATORS - INSTALLATION SPACING
1261.02	GUARDRAIL AND BARRIER DELINEATORS - TYPES AND MOUNTING
1262.01	GUARDRAIL END DELINEATION

GENERAL NOTES

THE FOLLOWING GENERAL NOTES APPLY AT ALL TIMES FOR THE DURATION OF THE CONSTRUCTION PROJECT, EXCEPT WHEN OTHERWISE NOTED IN THE PLAN, OR DIRECTED BY THE ENGINEER.

A) INSTALL PAVEMENT MARKINGS AND PAVEMENT MARKERS ON THE FINAL SURFACE AS FOLLOWS:

ROAD NAME	MARKING	MARKER
SR 1706 (KORNEGAY TOWN RD.)	PAINT	PERMANENT RAISED

B) PLACE TWO APPLICATIONS OF PAINT PAVEMENT MARKINGS ON THE FINAL WEARING SURFACE. PLACE THE SECOND APPLICATION OF PAINT UPON SUFFICIENT DRYING TIME OF THE FIRST.

C) TIE PROPOSED PAVEMENT MARKING LINES TO EXISTING PAVEMENT MARKING LINES.

D) REMOVE/REPLACE ANY CONFLICTING/DAMAGED PAVEMENT MARKINGS AND MARKERS.

E) REMOVE ALL RESIDUE AND SURFACE LAITANCE BY ACCEPTABLE METHODS ON CONCRETE BRIDGE DECKS PRIOR TO PLACING PAINT PAVEMENT MARKING MATERIAL.

PAVEMENT MARKING SCHEDULE

PA	WHITE EDGELINE	PAINT (4")
PI	YELLOW DOUBLE CENTER	PAINT (4")

PLAN SUBMITTED TO: NCDOT DIVISION 3

DAVID B. LEONARD, PE — DIVISION 3 BRIDGE PROGRAM MANAGER

STATE OF NORTH CAROLINA DEPARTMENT OF TRANSPORTATION

Prepared in the Office of:
RS&H
ARCHITECTS-ENGINEERS-PLANNERS, INC.

ANNIE C. PILZ, PE — PROJECT ENGINEER

MAILE KAWAHAKUI, EI — DESIGN ENGINEER

RS&H

3/20/2019
B-5651_PMP_Delineation\B5651_pmp_tsh.dgn
User:YoungCJ

DocuSign Envelope ID: 616F2EEF-EE65-45E5-A032-EE01B0061212

TIP NO.	SHEET NO.
B-5651	PMP-2

APPROVED: DocuSigned by: Annie C. Pitz

DATE: 5/16/2019

NORTH CAROLINA PROFESSIONAL SEAL 038700 ENGINEER ANNIE C. PITZ

DOCUMENT NOT CONSIDERED FINAL UNLESS ALL SIGNATURES COMPLETED

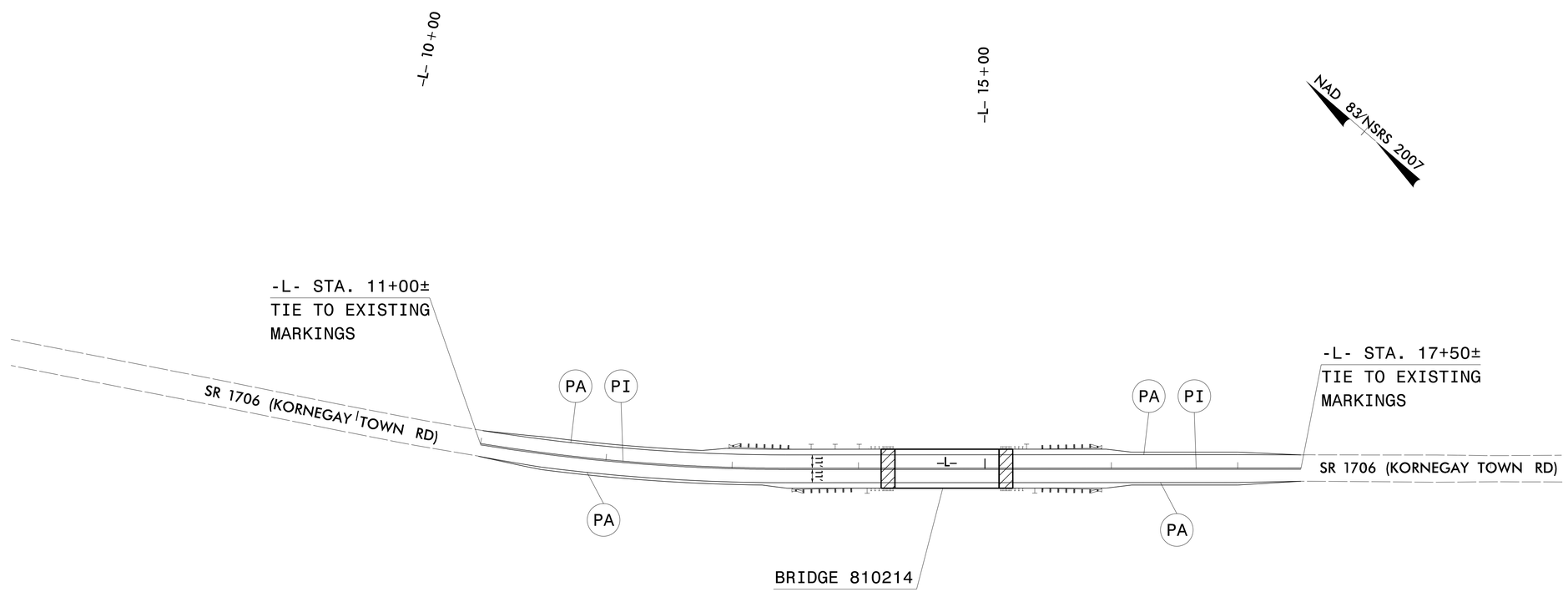

RS&H

PAVEMENT MARKING DETAIL

3/20/2019
R:\Traffic\Delineation\B5651_pmp_dtl_01.dgn
User:YoungCJ

DocuSign Envelope ID: 616F2EEF-EE65-45E5-A032-EE01B0061212

TIP PROJECT: B-5651

STATE	STATE PROJECT REFERENCE NO.	SHEET NO.	TOTAL SHEETS
N.C.	B-5651	EC-1	7

STATE PROJ. NO.	F. A. PROJ. NO.	DESCRIPTION
45606.1.2	BRZ–1706(005)	PE
45606.2.1	BRZ–1706(005)	ROW /UTL.
45606.3.1		CONST.

STATE OF NORTH CAROLINA
DIVISION OF HIGHWAYS

PLAN FOR PROPOSED
HIGHWAY EROSION CONTROL

SAMPSON COUNTY

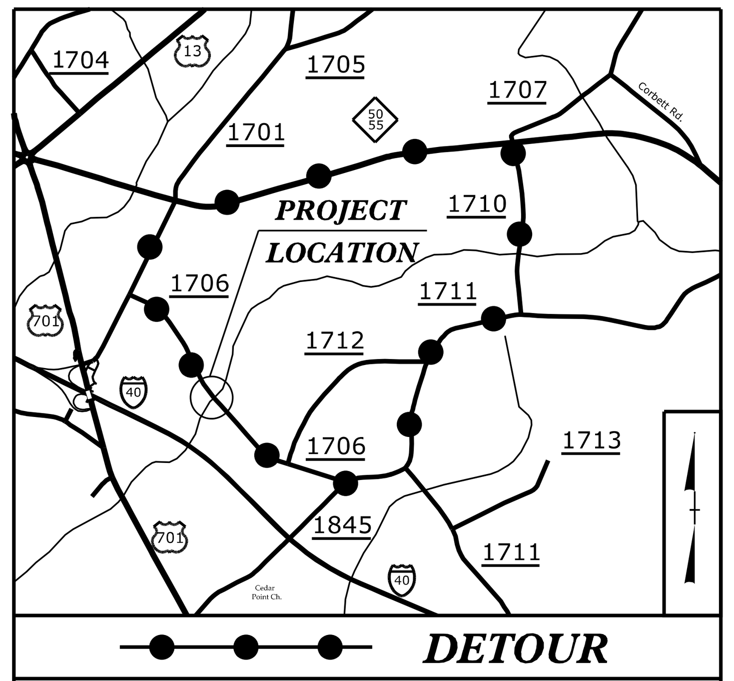

VICINITY MAP N.T.S.

LOCATION: BRIDGE NO. 214 OVER KILL CREEK ON SR 1706 (KORNEGAY TOWN RD.)

TYPE OF WORK: GRADING, DRAINAGE, PAVING AND STRUCTURE (BRIDGE)

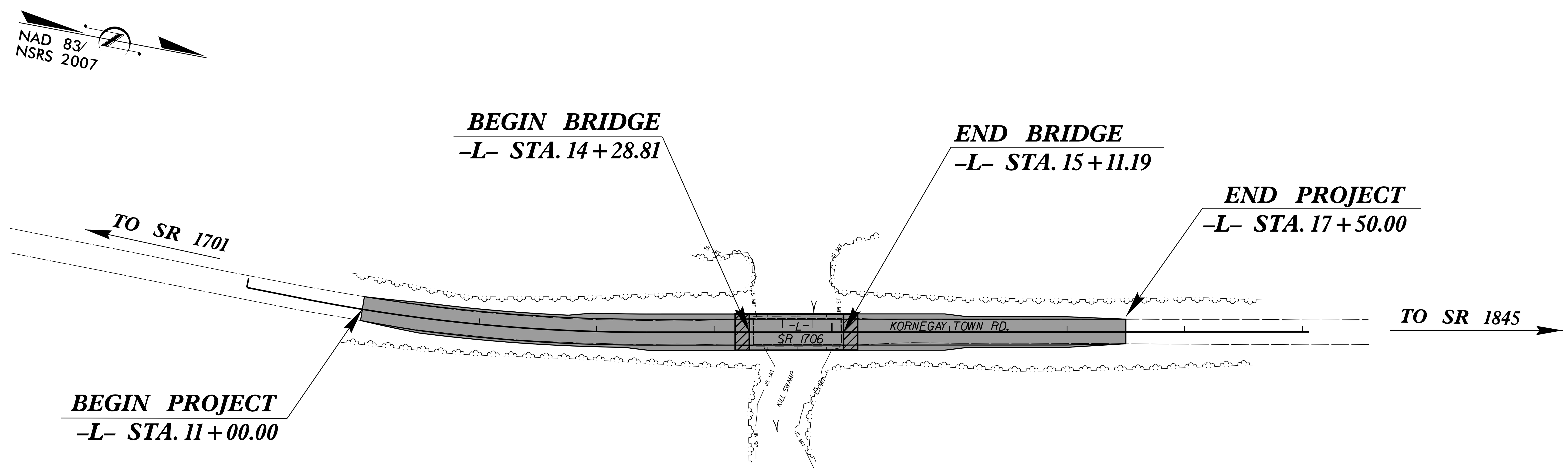

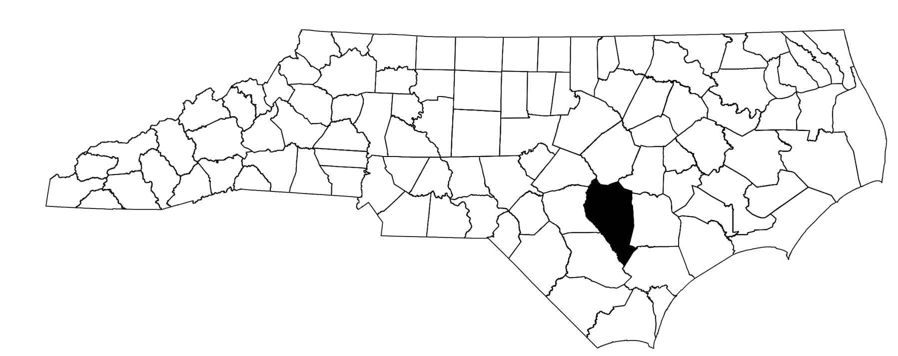

EROSION AND SEDIMENT CONTROL MEASURES

Std. #	Description
1630.03	Temporary Silt Ditch
1630.05	Temporary Diversion
1605.01	Temporary Silt Fence
1606.01	Special Sediment Control Fence
1622.01	Temporary Berms and Slope Drains
1630.02	Silt Basin Type B
1633.01	Temporary Rock Silt Check Type-A
	Temporary Rock Silt Check Type-A with Matting and Polyacrylamide (PAM)
1633.02	Temporary Rock Silt Check Type-B
	Wattle / Coir Fiber Wattle
	Wattle / Coir Fiber Wattle with Polyacrylamide (PAM)
1634.01	Temporary Rock Sediment Dam Type-A
1634.02	Temporary Rock Sediment Dam Type-B
1635.01	Rock Pipe Inlet Sediment Trap Type-A
1635.02	Rock Pipe Inlet Sediment Trap Type-B
1630.04	Stilling Basin
1630.06	Special Stilling Basin
	Rock Inlet Sediment Trap:
1632.01	Type A
1632.02	Type B
1632.03	Type C
	Skimmer Basin
	Tiered Skimmer Basin
	Infiltration Basin

THIS PROJECT CONTAINS EROSION CONTROL PLANS FOR CLEARING AND GRUBBING PHASE OF CONSTRUCTION.

THERE IS NO CONTROL OF ACCESS ON THIS PROJECT.
THIS PROJECT IS NOT WITHIN ANY MUNICIPAL BOUNDARIES.
CLEARING ON THIS PROJECT SHALL BE PERFORMED TO THE LIMITS ESTABLISHED BY MODIFIED METHOD III.

GRAPHIC SCALE

25 0 50
PLANS

25 0 50
PROFILE (HORIZONTAL)

5 0 10
PROFILE (VERTICAL)

THESE EROSION AND SEDIMENT CONTROL PLANS COMPLY WITH THE REGULATIONS SET FORTH BY THE NCG-010000 GENERAL CONSTRUCTION PERMIT EFFECTIVE AUGUST 1, 2016 AND ISSUED BY THE NORTH CAROLINA DEPARTMENT OF ENVIRONMENTAL QUALITY DIVISION OF WATER RESOURCES.

Prepared In the Office of:

RS&H

8521 SIX FORKS ROAD, SUITE 400
RALEIGH, NC 27615
NC FIRM LICENSE No: F-0493

Designed by:

COLE BENJAMIN, P.E. 3977
NAME LEVEL III CERTIFICATION NO.

Reviewed In the Office of:

ROADSIDE ENVIRONMENTAL UNIT
1 South Wilmington St.
Raleigh, NC 27611

2018 STANDARD SPECIFICATIONS

Reviewed by:

MARK STALEY, EI, CPESC, CPSWQ

Roadway Standard Drawings

The following roadway english standards as appear in "Roadway Standard Drawings"– Roadway Design Unit – N. C. Department of Transportation – Raleigh, N. C., dated January 2018 and the latest revison thereto are applicable to this project and by reference hereby are considered a part of these plans.

1604.01 Railroad Erosion Control Detail
1605.01 Temporary Silt Fence
1606.01 Special Sediment Control Fence
1607.01 Gravel Construction Entrance
1622.01 Temporary Berms and Slope Drains
1630.01 Riser Basin
1630.02 Silt Basin Type B
1630.03 Temporary Silt Ditch
1630.04 Stilling Basin
1630.05 Temporary Diversion
1630.06 Special Stilling Basin
1631.01 Matting Installation
1632.01 Rock Inlet Sediment Trap Type A
1632.02 Rock Inlet Sediment Trap Type B
1632.03 Rock Inlet Sediment Trap Type C
1633.01 Temporary Rock Silt Check Type A
1633.02 Temporary Rock Silt Check Type B
1634.01 Temporary Rock Sediment Dam Type A
1634.02 Temporary Rock Sediment Dam Type B
1635.01 Rock Pipe Inlet Sediment Trap Type A
1635.02 Rock Pipe Inlet Sediment Trap Type B
1640.01 Coir Fiber Baffle
1645.01 Temporary Stream Crossing

DocuSign Envelope ID: 616F2EEF-EE65-45E5-A032-EE01B0061212

PROJECT REFERENCE NO.	SHEET NO.
B-5651	EC-2

COIR FIBER WATTLE BARRIER DETAIL

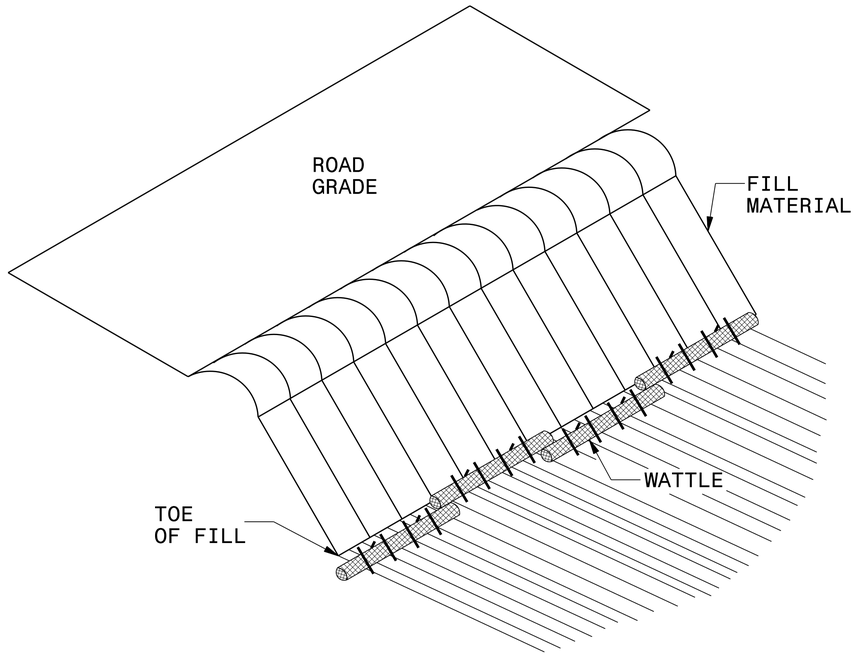

ISOMETRIC VIEW

NOTES:

USE MINIMUM 18 IN. NOMINAL DIAMETER COIR FIBER (COCONUT) WATTLE AND LENGTH OF 10 FT.

EXCAVATE A 2 TO 3 INCH TRENCH FOR WATTLE TO BE PLACED.

DO NOT PLACE WATTLES ON TOE OF SLOPE.

USE 2 FT. WOODEN STAKES WITH A 2 IN. BY 2 IN. NOMINAL CROSS SECTION.

INSTALL A MINIMUM OF 2 UPSLOPE STAKES AND 4 DOWNSLOPE STAKES AT AN ANGLE TO WEDGE WATTLE TO GROUND.

PROVIDE STAPLES MADE OF 0.125 IN. DIAMETER STEEL WIRE FORMED INTO A U SHAPE NOT LESS THAN 12″ IN LENGTH.

INSTALL STAPLES APPROXIMATELY EVERY 1 LINEAR FOOT ON BOTH SIDES OF WATTLE AND AT EACH END TO SECURE IT TO THE SOIL.

FOR BREAKS ALONG LARGE SLOPES, USE MAXIMUM SPACING OF 25 FT.

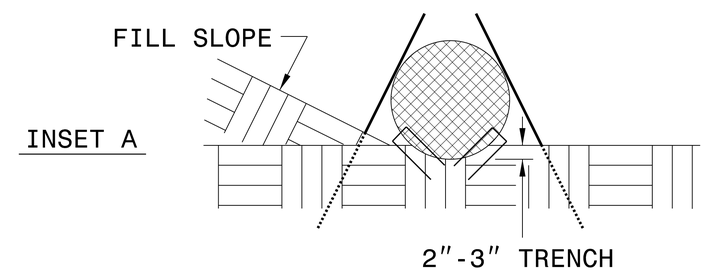

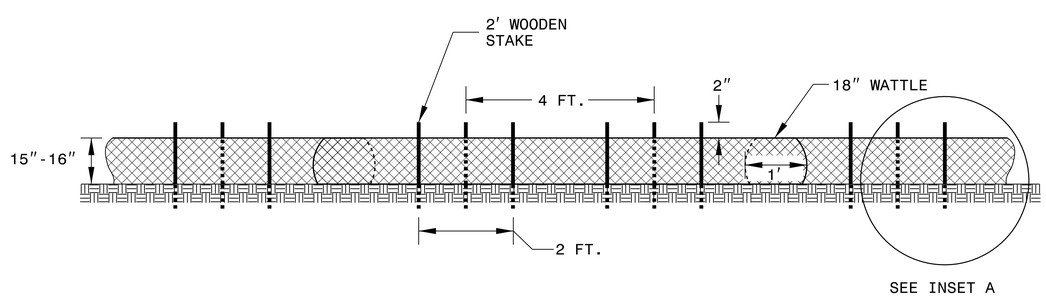

FRONT VIEW

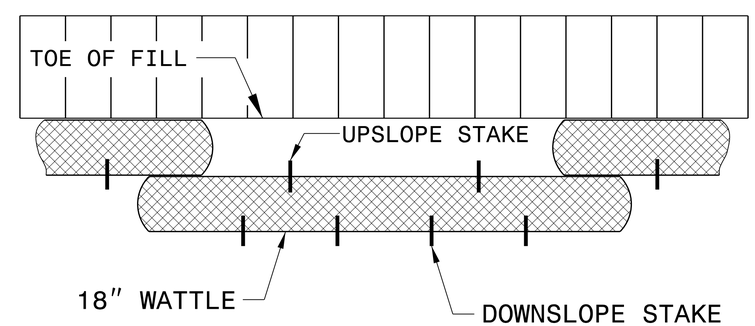

TOP VIEW

NOT TO SCALE

DocuSign Envelope ID: 616F2EEF-EE65-45E5-A032-EE01B0061212

PROJECT REFERENCE NO.	SHEET NO.
B-5651	EC-2A

TEMPORARY ROCK SILT CHECK TYPE 'A' WITH EXCELSIOR MATTING AND POLYACRYLAMIDE (PAM)

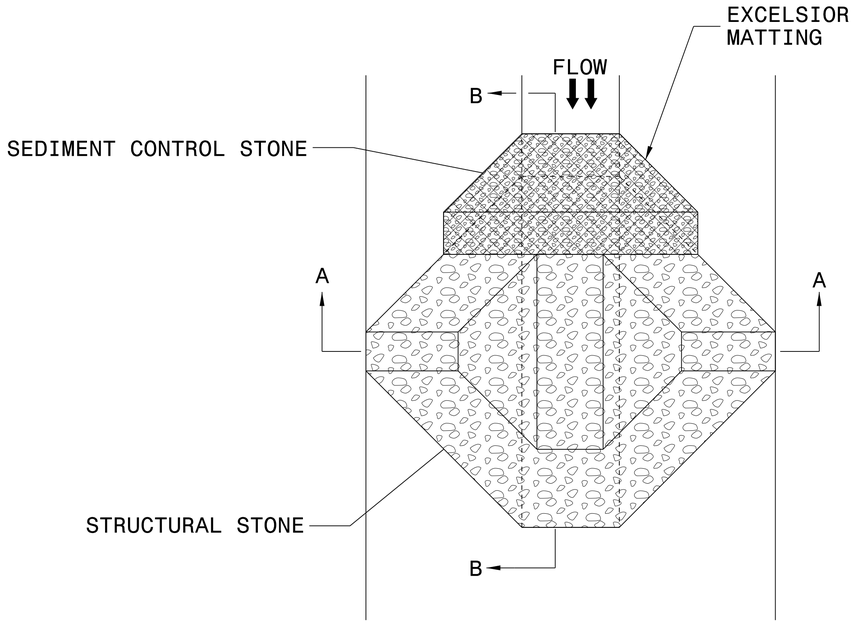

PLAN

NOTES:

INSTALL TEMPORARY ROCK SILT CHECK TYPE A IN ACCORDANCE WITH ROADWAY STANDARD DRAWING NO. 1633.01.

USE EXCELSIOR FOR MATTING MATERIAL AND ANCHOR MATTING SECTION AT TOP AND BOTTOM WITH CLASS B STONE.

PRIOR TO POLYACRYLAMIDE (PAM) APPLICATION, OBTAIN A SOIL SAMPLE FROM PROJECT LOCATION, AND FROM OFFSITE MATERIAL, AND ANALYZE FOR APPROPRIATE PAM FLOCCULANT TO BE APPLIED TO EACH ROCK SILT CHECK.

INITIALLY APPLY 4 OUNCES OF POLYACRYLAMIDE (PAM) TO TOP OF MATTING SECTION AND AFTER EVERY RAINFALL EVENT THAT EQUALS OR EXCEEDS 0.50 INCHES.

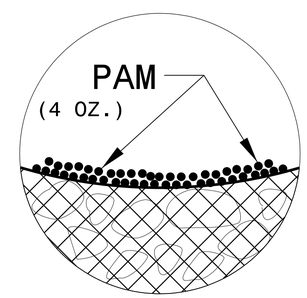

INSET A

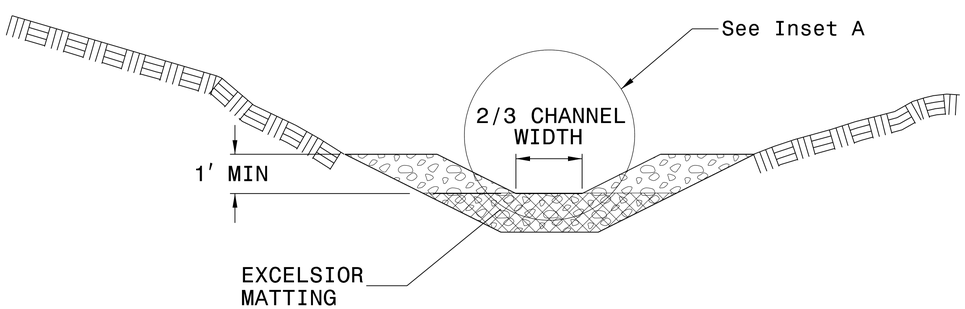

SECTION A-A

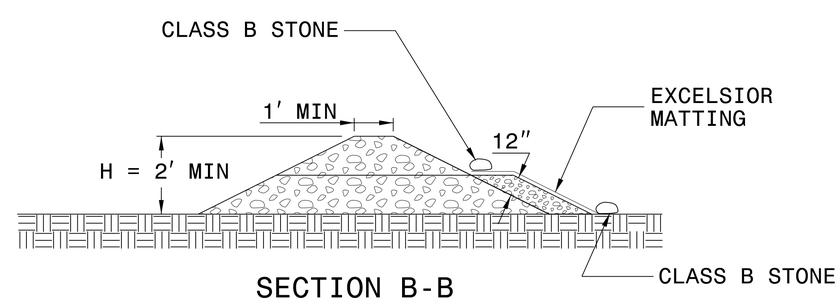

SECTION B-B

NOT TO SCALE

DocuSign Envelope ID: 616F2EEF-EE65-45E5-A032-EE01B0061212

PROJECT REFERENCE NO.	SHEET NO.
B-5651	EC-2B

SILT FENCE COIR FIBER WATTLE BREAK DETAIL

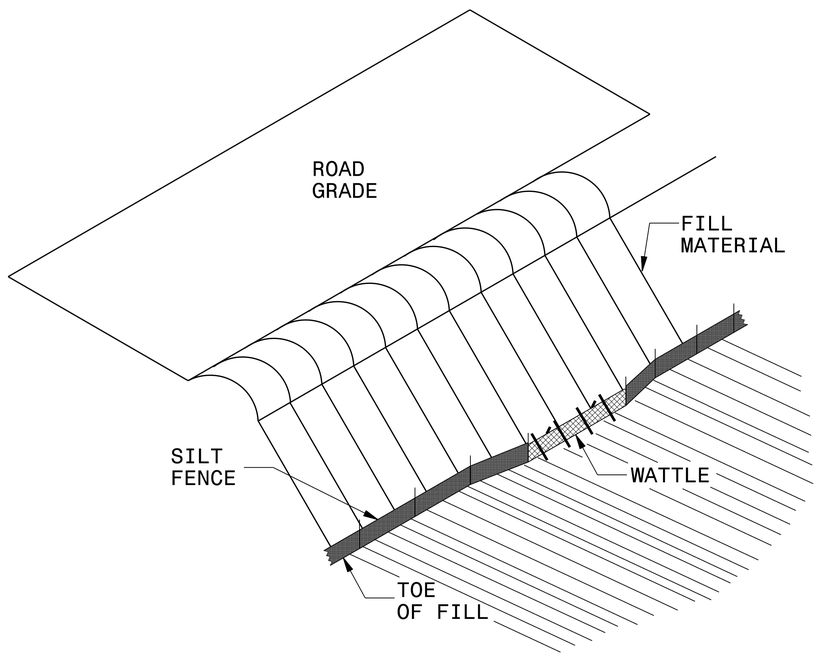

ISOMETRIC VIEW

NOTES:

USE MINIMUM 12 IN. DIAMETER COIR FIBER (COCONUT FIBER) WATTLE AND LENGTH OF 10 FT.

EXCAVATE A 1 TO 2 INCH TRENCH FOR WATTLE TO BE PLACED.

DO NOT PLACE WATTLE ON TOE OF SLOPE.

USE 2 FT. WOODEN STAKES WITH A 2 IN. BY 2 IN. NOMINAL CROSS SECTION.

INSTALL A MINIMUM OF 2 UPSLOPE STAKES AND 4 DOWNSLOPE STAKES AT AN ANGLE TO WEDGE WATTLE TO GROUND.

PROVIDE STAPLES MADE OF 0.125 IN. DIAMETER STEEL WIRE FORMED INTO A U SHAPE NOT LESS THAN 12″ IN LENGTH.

INSTALL STAPLES APPROXIMATELY EVERY 1 LINEAR FOOT ON BOTH SIDES OF WATTLE AND AT EACH END TO SECURE IT TO THE SOIL.

WATTLE INSTALLATION CAN BE ON OUTSIDE OF THE SILT FENCE AS DIRECTED.

INSTALL TEMPORARY SILT FENCE IN ACCORDANCE WITH SECTION 1605 OF THE STANDARD SPECIFICATIONS.

INSET A

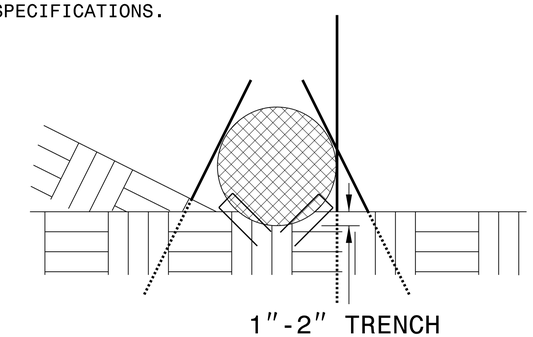

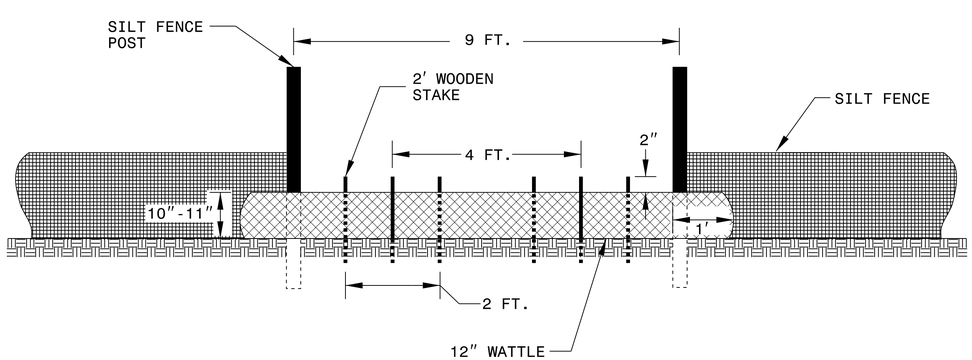

VIEW FROM SLOPE

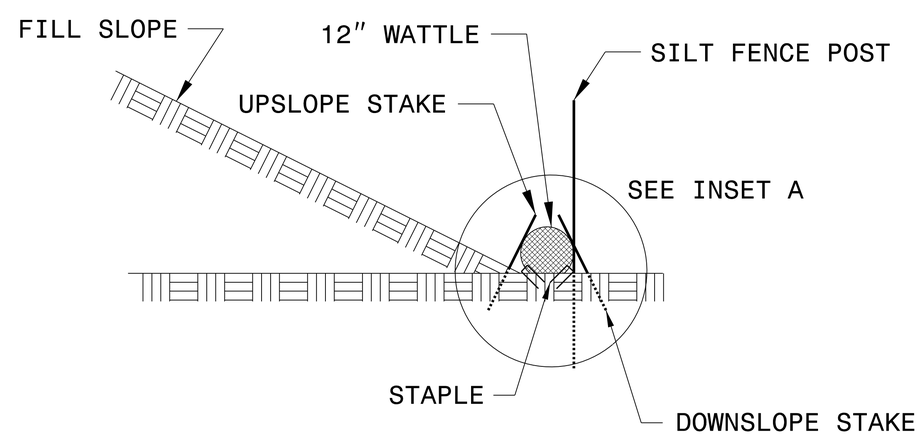

SIDE VIEW

DocuSign Envelope ID: 616F2EEF-EE65-45E5-A032-EE01B0061212

PROJECT REFERENCE NO.	SHEET NO.
B-5651	EC-3

DIVISION OF HIGHWAYS
STATE OF NORTH CAROLINA

SOIL STABILIZATION TIMEFRAMES

SITE DESCRIPTION	STABILIZATION TIME	TIMEFRAME EXCEPTIONS
PERIMETER DIKES, SWALES, DITCHES AND SLOPES	7 DAYS	NONE
HIGH QUALITY WATER (HQW) ZONES	7 DAYS	NONE
SLOPES STEEPER THAN 3:1	7 DAYS	IF SLOPES ARE 10' OR LESS IN LENGTH AND ARE NOT STEEPER THAN 2:1, 14 DAYS ARE ALLOWED.
SLOPES 3:1 OR FLATTER	14 DAYS	7 DAYS FOR SLOPES GREATER THAN 50' IN LENGTH.
ALL OTHER AREAS WITH SLOPES FLATTER THAN 4:1	14 DAYS	NONE, EXCEPT FOR PERIMETERS AND HQW ZONES.

DocuSign Envelope ID: 616F2EEF-EE65-45E5-A032-EE01B0061212

BRIDGE NO. 810214

PROJECT REFERENCE NO.	SHEET NO.
B-5651	EC-4/CONST.4

RS&H
NC FIRM LICENSE No: F-0493

NAD 83/NSRS 2007

8/17/99

REVISIONS

-L- CURVE DATA
PI Sta 11+96.37
△ = 11° 11' 11.1" (LT)
D = 3° 49' 11.0"
L = 292.86'
T = 146.90'
R = 1,500.00'
SE = 04
RO = SEE PLANS
V = 60 MPH

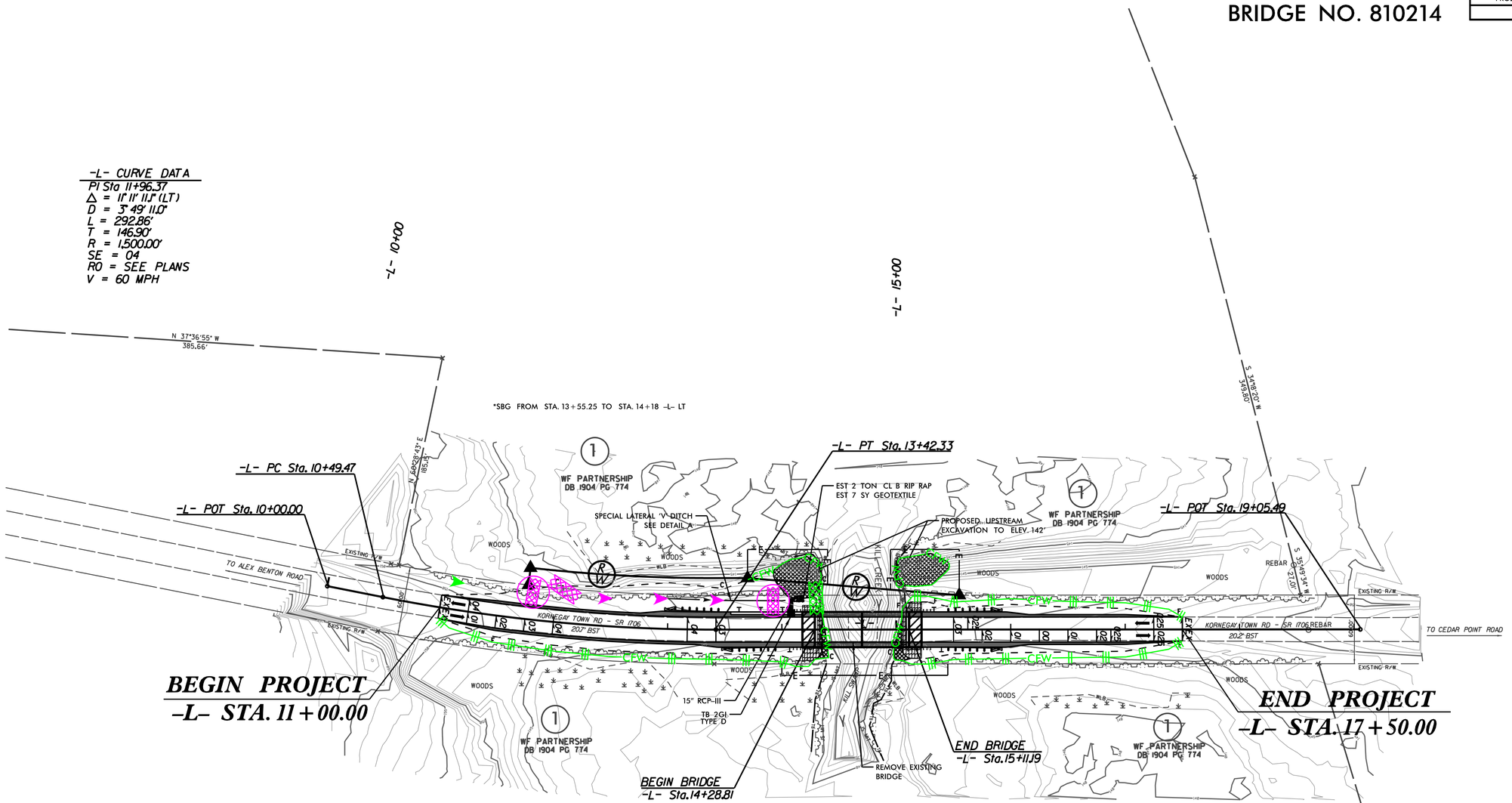

DETAIL A
SPECIAL LATERAL 'V' DITCH
(Not to Scale)

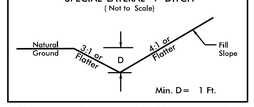

FROM -L- STA. 13+00 TO STA. 14+30 LT

NOTE: UTILIZE COIR FIBER MATTING ADJACENT TO WETLANDS,/JURISDICTIONAL AREAS, AND AS DIRECTED

NOTE: UTILIZE SPECIAL STILLING BASIN(S) AS STILLING BASIN(S) WHERE APPLICABLE.

NOTE: PLACE TEMPORARY ROCK SEDIMENT DAMS TYPE – B AND TEMPORARY ROCK SILT CHECKS TYPE – A AT DRAINAGE OUTLETS.

NOTES: ANY DEVIATION FROM OPTIONS GIVEN WILL REQUIRE PRIOR APPROVAL BY ENGINEER.

ADDITIONAL EROSION CONTROL DEVICES MAY NEED TO BE INSTALLED AS DIRECTED BY THE ENGINEER.

NOTE: UTILIZE FLOATING TURBIDITY CURTAIN AS NECESSARY.

CLEARING AND GRUBBING EROSION CONTROL FOR CONSTRUCTION SHEET 4

3/6/2019
R:\Environmental\Design\Plan Sheets\B-5651_EC_psh_EC-4.dgn
3:23:12 PM

DocuSign Envelope ID: 616F2EEF-EE65-45E5-A032-EE01B0061212

BRIDGE NO. 810214

PROJECT REFERENCE NO.	SHEET NO.
B-5651	EC-5/CONST.4

RS&H
NC FIRM LICENSE No: F-0493

NAD 83/NSRS 2007

-L- CURVE DATA
PI Sta 11+96.37
△ = 11° 11' 11.1" (LT)
D = 3° 49' 11.0"
L = 292.86'
T = 146.90'
R = 1,500.00'
SE = 04
R0 = SEE PLANS
V = 60 MPH

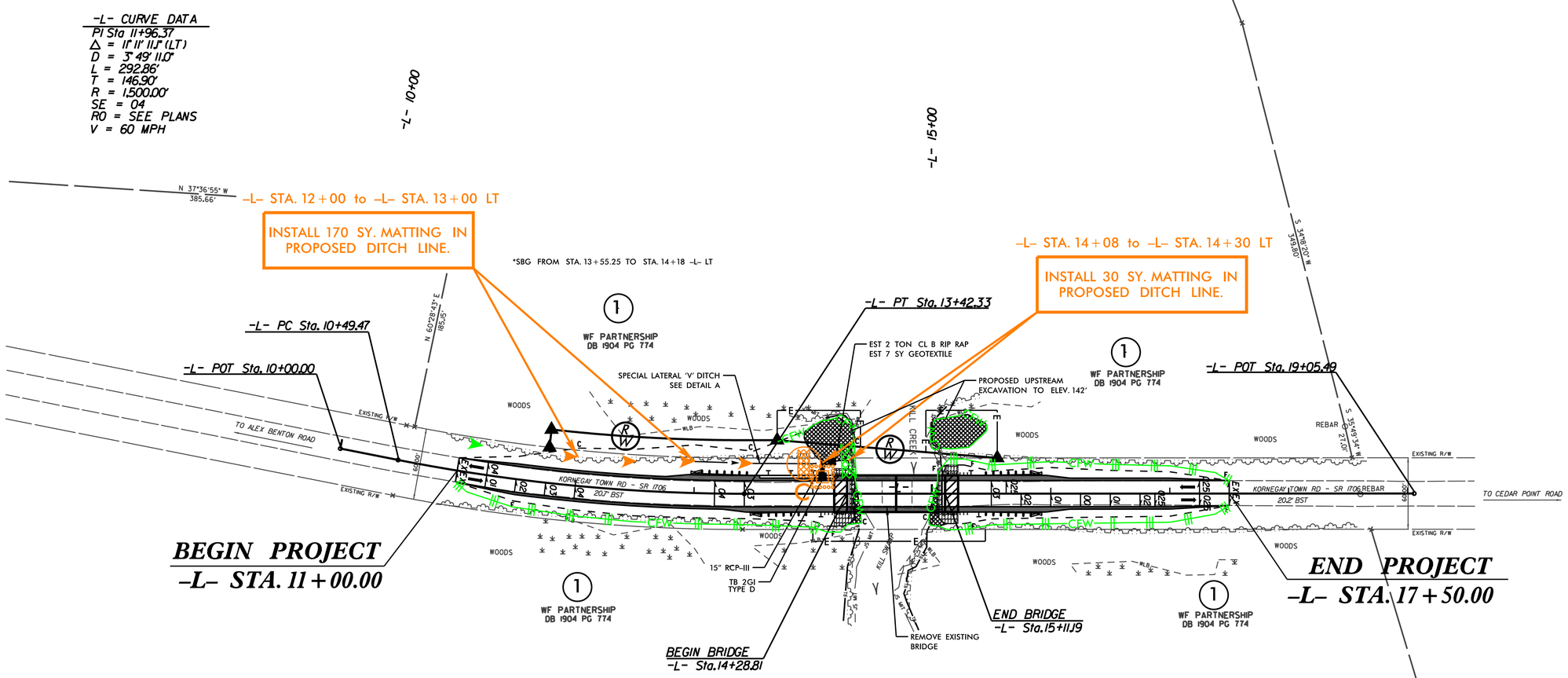

DETAIL A
SPECIAL LATERAL 'V' DITCH
(Not to Scale)

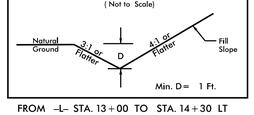

FROM -L- STA. 13+00 TO STA. 14+30 LT

NOTE: UTILIZE FLOATING TURBIDITY CURTAIN AS NECESSARY.

NOTE: UTILIZE COIR FIBER MATTING ADJACENT TO WETLANDS/JURISDICTIONAL AREAS, AND AS DIRECTED

NOTE: UTILIZE SPECIAL STILLING BASIN(S) AS STILLING BASIN(S) WHERE APPLICABLE.

NOTES: ANY DEVIATION FROM OPTIONS GIVEN WILL REQUIRE PRIOR APPROVAL BY ENGINEER.

ADDITIONAL EROSION CONTROL DEVICES MAY NEED TO BE INSTALLED AS DIRECTED BY THE ENGINEER.

REVISIONS

8/17/99

3/6/2019
R:\Environmental\Design\Plan Sheets\B-5651_EC_psh_EC-5.dgn
3:24:17 PM

DocuSign Envelope ID: 616F2EEF-EE65-45E5-A032-EE01B0061212

TIP PROJECT: B-5651

CONTRACT:

STATE OF NORTH CAROLINA
DIVISION OF HIGHWAYS

SAMPSON COUNTY

T.I.P. NO.	SHEET NO.
B-5651	UO-1

NOTE:
ALL UTILITY WORK SHOWN ON THIS SHEET WILL BE DONE BY OTHERS. NO PAYMENT WILL BE MADE TO THE CONTRACTOR FOR UTILITY WORK SHOWN ON THIS SHEET.

LOCATION: BRIDGE NO. 214 OVER KILL CREEK ON SR 1706 (KORNEGAY TOWN RD.)

TYPE OF WORK:COMMUNICATIONS

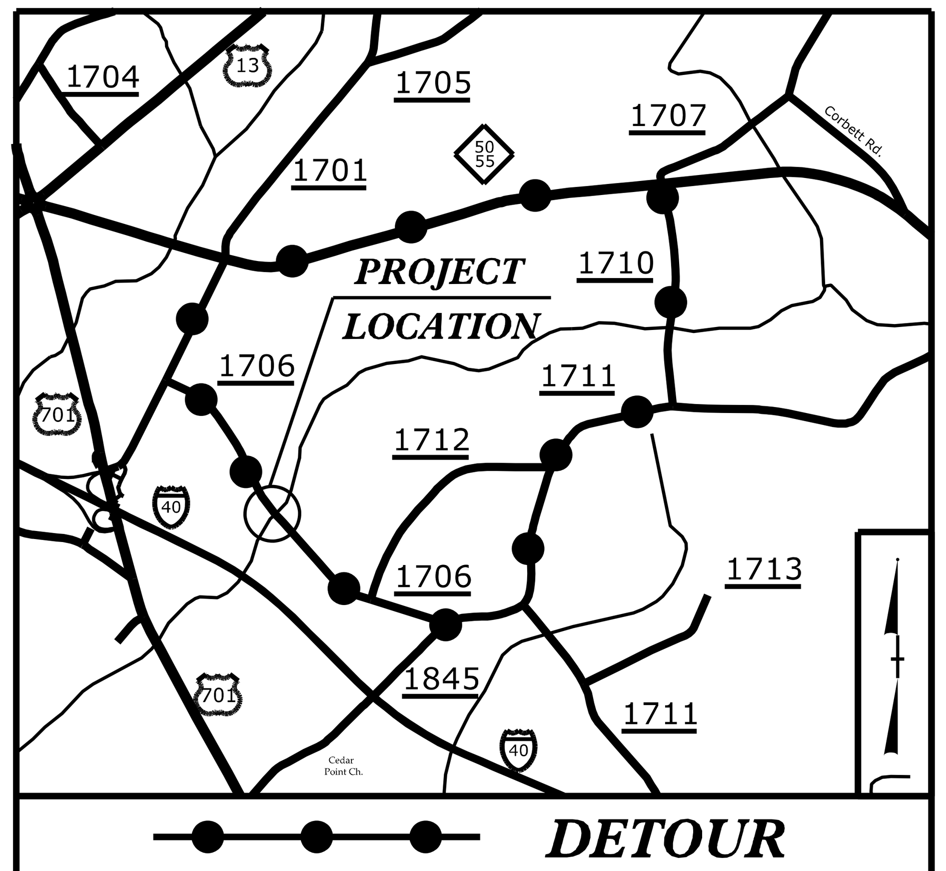

VICINITY MAP N.T.S.

NAD 83/
NSRS 2007

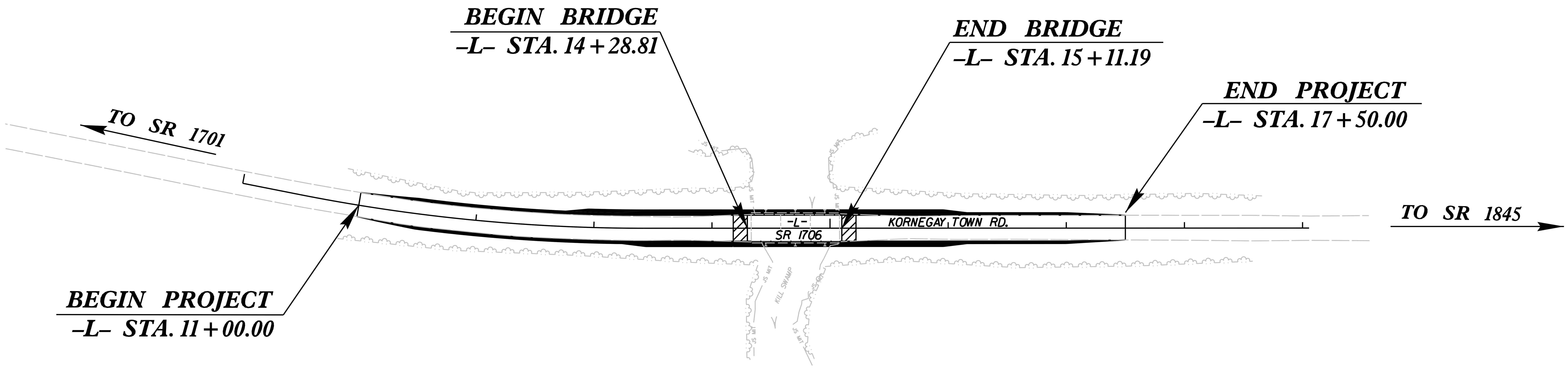

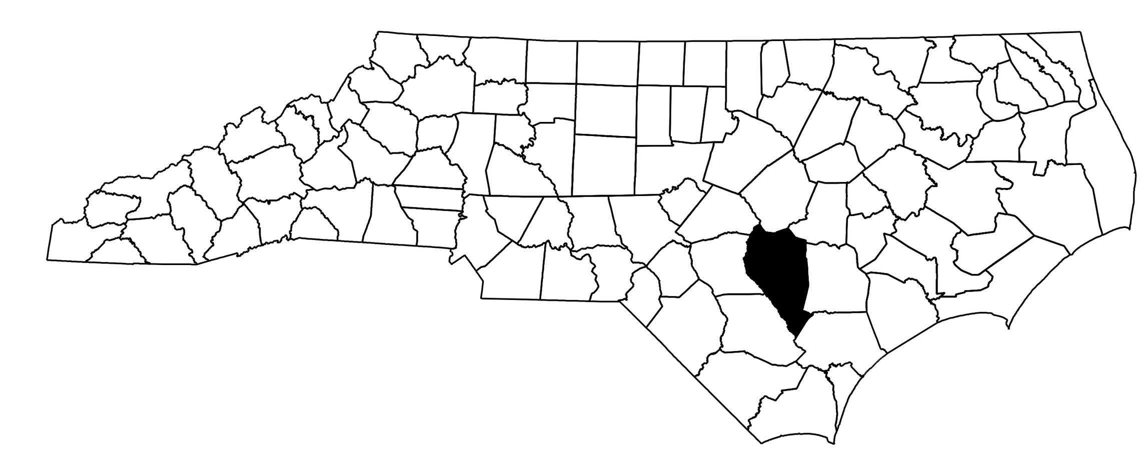

GRAPHIC SCALES

50 25 0 50 100 — PLANS

50 25 0 50 100 — PROFILE (HORIZONTAL)

10 5 0 10 20 — PROFILE (VERTICAL)

INDEX OF SHEETS

SHEET NO.:	DESCRIPTION:
UO-1	TITLE SHEET
UO-2	UBO PLAN SHEET

UTILITY OWNERS WITH CONFLICTS

(A) COMMUNICATIONS - CENTURYLINK

PREPARED IN THE OFFICE OF:

SO-DEEP | SAM NC™

SO-DEEP | SAM NC, Inc.
A SAM COMPANY
2800-154 Sumner Boulevard, Raleigh, NC 27616 Tel 919-878-7466

Keith Garry	UTILITY PROJECT MANAGER
Chris Travis	PROJECT UTILITY COORDINATOR

DIVISION OF HIGHWAYS
DIVISION 03
DIV ADDRESS
5501 Barbados Blvd.
Castle Hayne, NC 28429

Monica Duval	DIVISION CONTACT #1
Lonny Sleeper	DIVISION CONTACT #2

$$$$SYSTIME$$$$ $$$$DGN$$$$ $$$$USERNAME$$$$

09/08/99

DocuSign Envelope ID: 616F2EEF-EE65-45E5-A032-EE01B0061212

8/17/99

BRIDGE NO. 214

PROJECT REFERENCE NO.	SHEET NO.
B-5651	U0-2
THIS SHEET CORRESPONDS TO RDY-4	

UTILITIES BY OTHERS

NOTE:
ALL PROPOSED UTILITY WORK SHOWN ON THIS SHEET WILL BE DONE BY OTHERS. NO PAYMENT WILL BE MADE TO THE CONTRACTOR FOR PROPOSED UTILITY WORK SHOWN ON THIS SHEET.

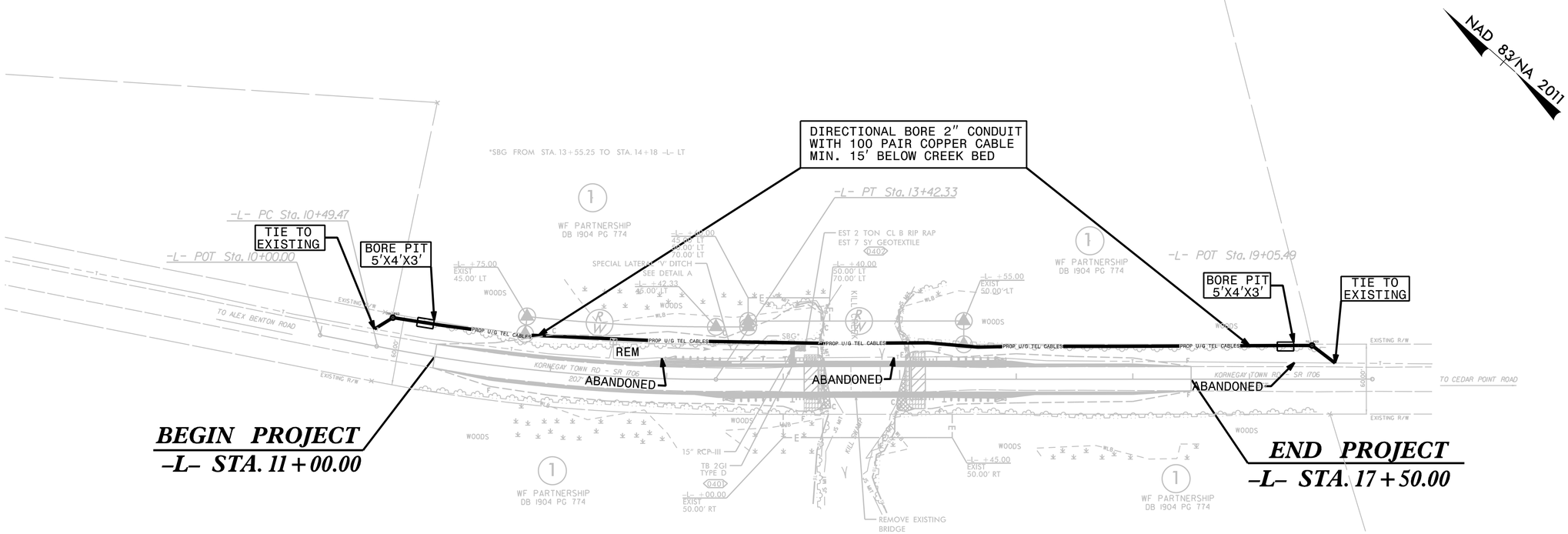

NPF0T6KNURAL,5/7/2019,R:\Roadway\XSC\Copy of Earthwork%20XSC%20Volume%20Summary(1).xls
DocuSign Envelope ID: 616F2EEF-EE65-45E5-A032-EE01B0061212

STATE OF NORTH CAROLINA
DIVISION OF HIGHWAYS

CROSS-SECTION SUMMARY

PROJ. REFERENCE NO.	SHEET NO.
B-5651	X-1A

Unclassified excavation, fine grading, clearing and grubbing and removal of existing pavement will be paid for at the lump sum price for "Grading".

Quantities are approximate only. The Resident Engineer will recross-section the work accurately when the project is staked out. These cross-section notes will be used in computing the final quantities for which the contractor will be paid.

NOTE: EMBANKMENT COLUMN INCLUDES BACKFILL FOR UNDERCUT

Station L	Uncl. Exc. (cu. yd.)	Embt (cu. yd.)
11+00.00	0	0
11+50.00	0	0
12+00.00	60	3
12+50.00	91	4
13+00.00	123	5
13+50.00	111	5
14+00.00	91	8
14+28.81	40	18

Station L	Uncl. Exc. (cu. yd.)	Embt (cu. yd.)
15+11.19	0	0
15+50.00	19	17
16+00.00	26	7
16+50.00	16	9
17+00.00	8	8
17+50.00	4	2

INDEX OF SHEETS

-L-	X-1 THRU X-5

DocuSign Envelope ID: 616F2EEF-EE65-45E5-A032-EE01B0061212

0 2.5 5	PROJ. REFERENCE NO.	SHEET NO.
	B-5651	X-1

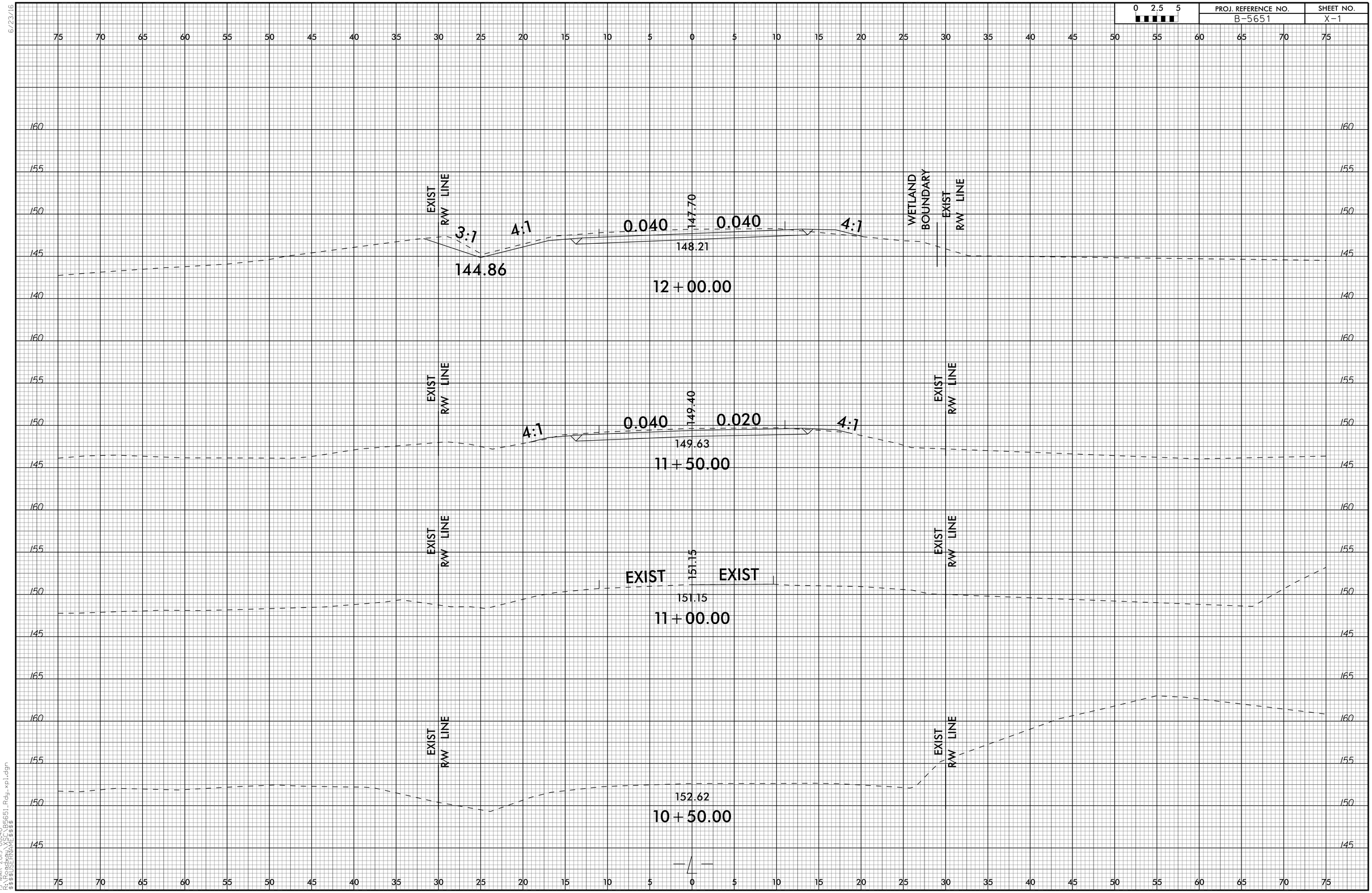

19-MAR-2019 08:40
R:\Work\Projects\B5651\Rdy_xpl.dgn
$$$$USERNAME$$$$

DocuSign Envelope ID: 616F2EEF-EE65-45E5-A032-EE01B0061212

0 2.5 5	PROJ. REFERENCE NO.	SHEET NO.
	B-5651	X-2

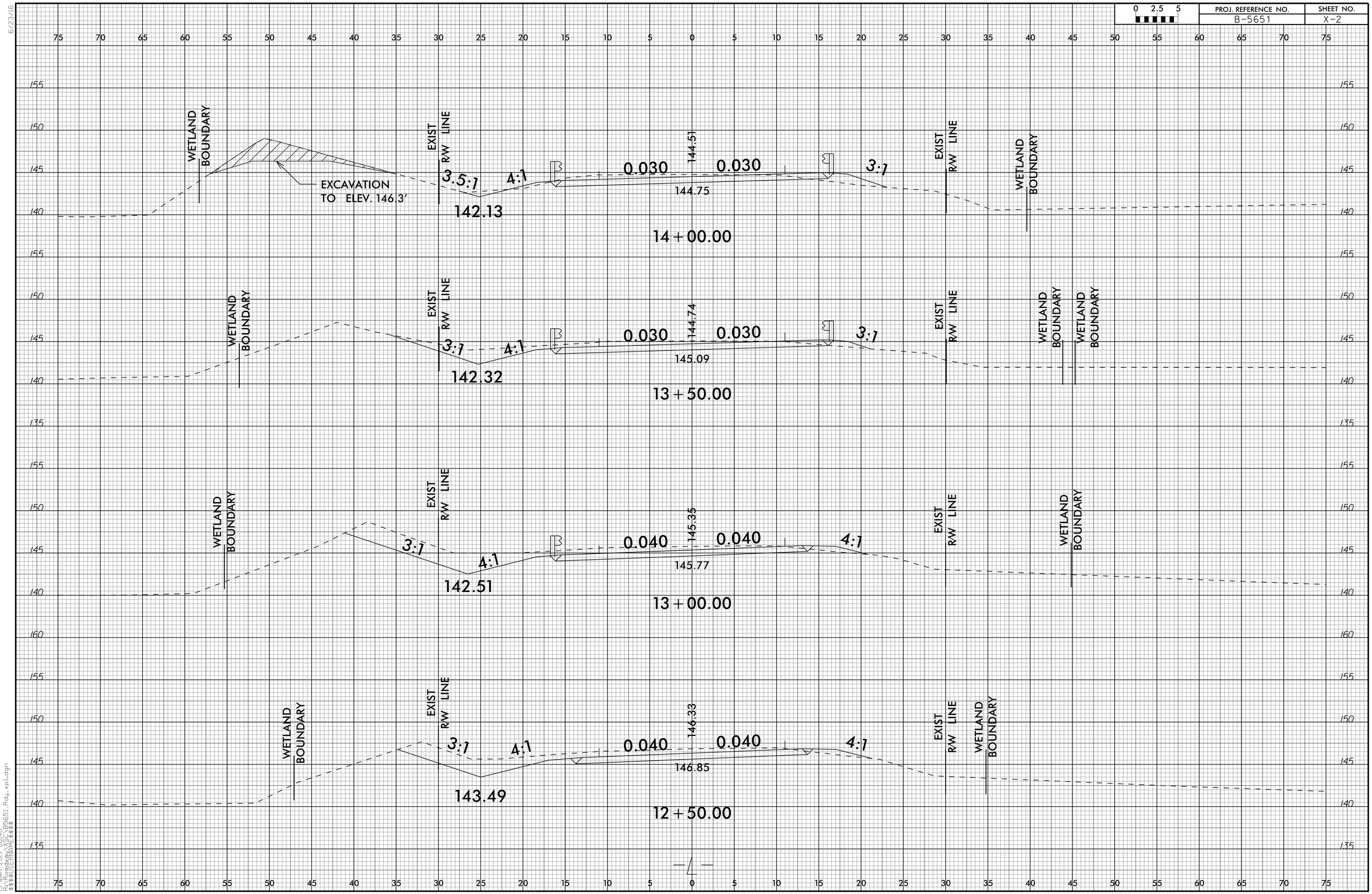

DocuSign Envelope ID: 616F2EEF-EE65-45E5-A032-EE01B0061212

0 2.5 5	PROJ. REFERENCE NO.	SHEET NO.
	B-5651	X-3

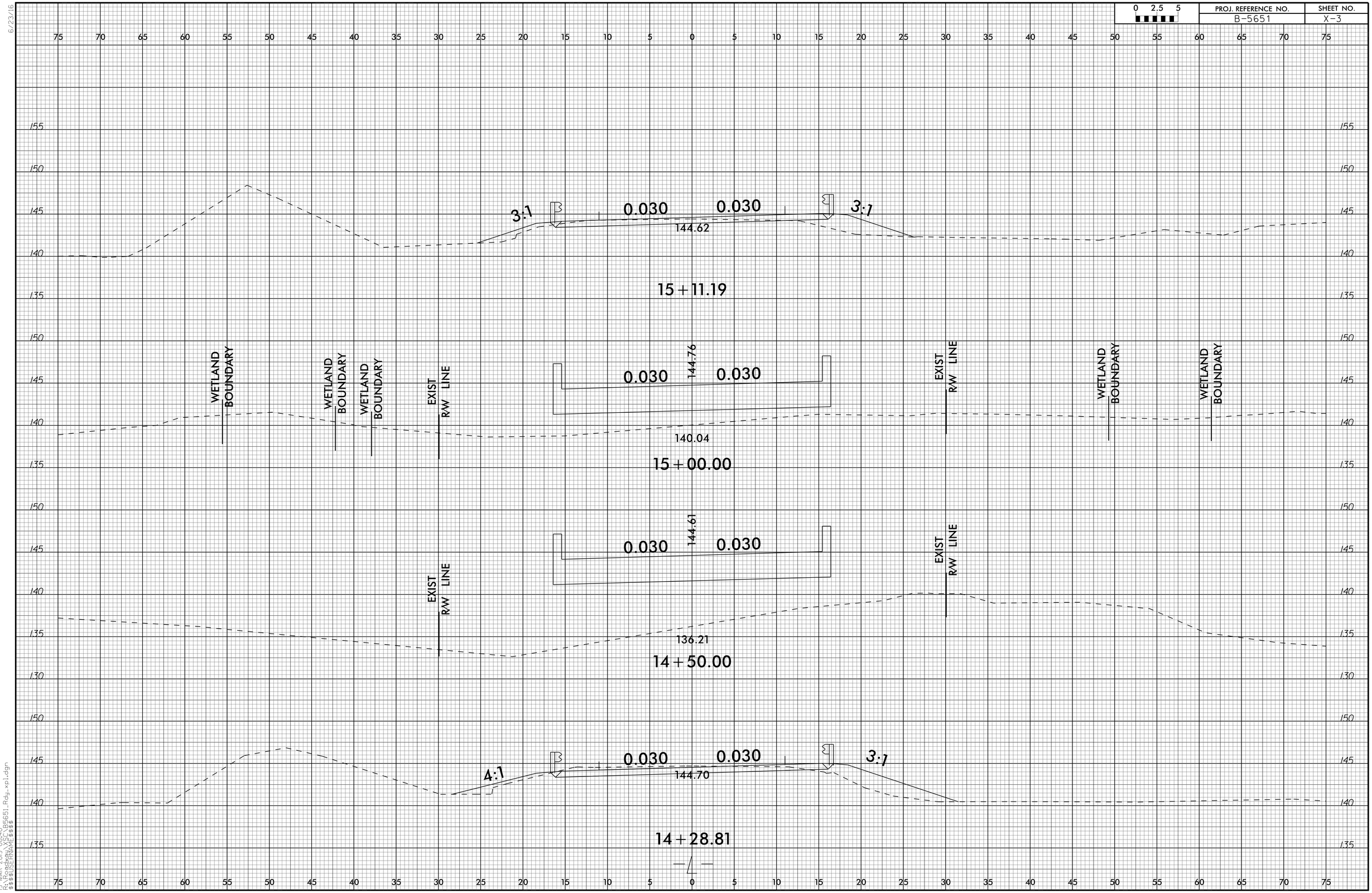

DocuSign Envelope ID: 616F2EEF-EE65-45E5-A032-EE01B0061212

0 2.5 5	PROJ. REFERENCE NO.	SHEET NO.
	B-5651	X-4

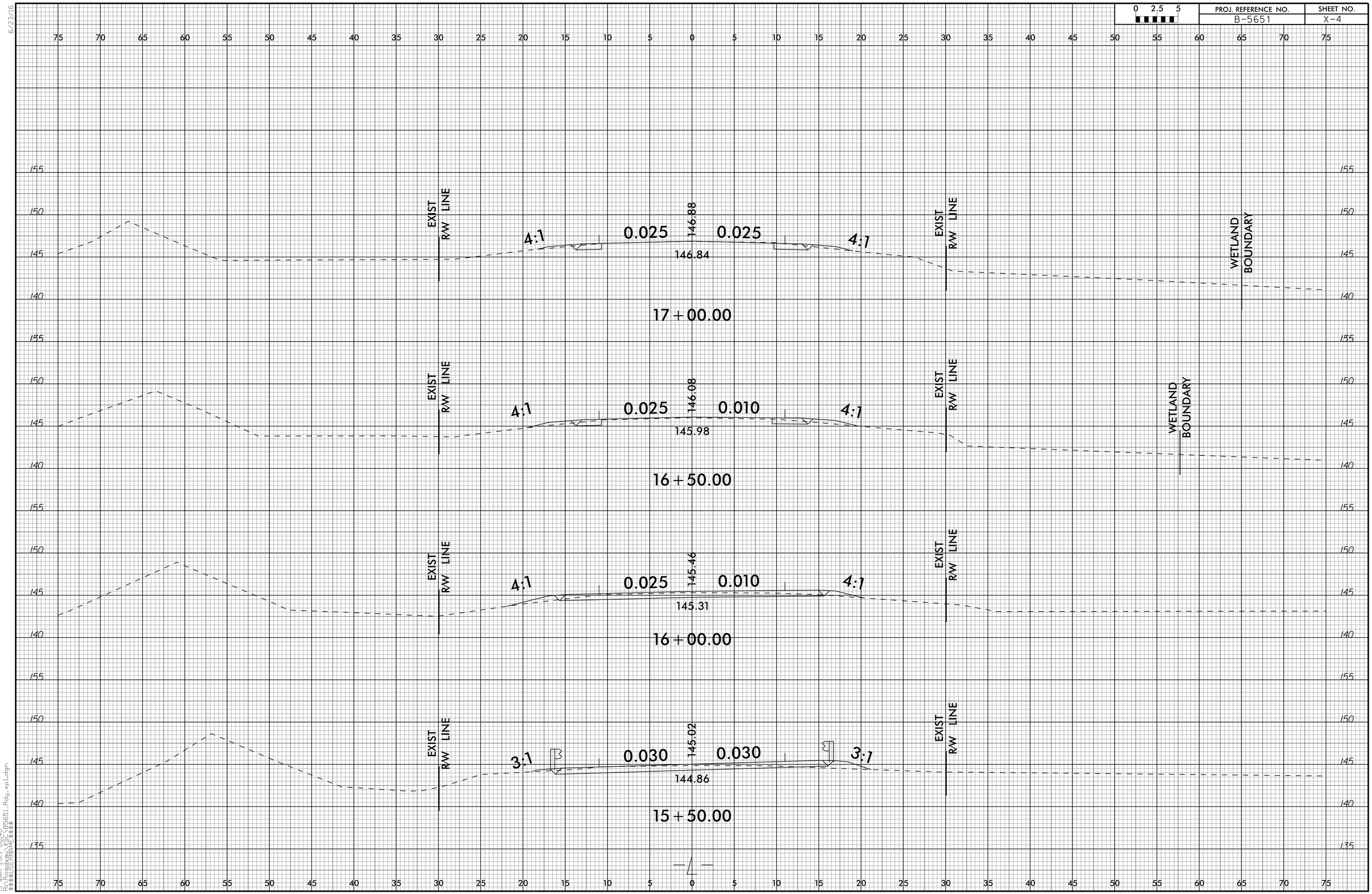

DocuSign Envelope ID: 616F2EEF-EE65-45E5-A032-EE01B0061212

6/23/16

0 2.5 5

PROJ. REFERENCE NO.	SHEET NO.
B-5651	X-5

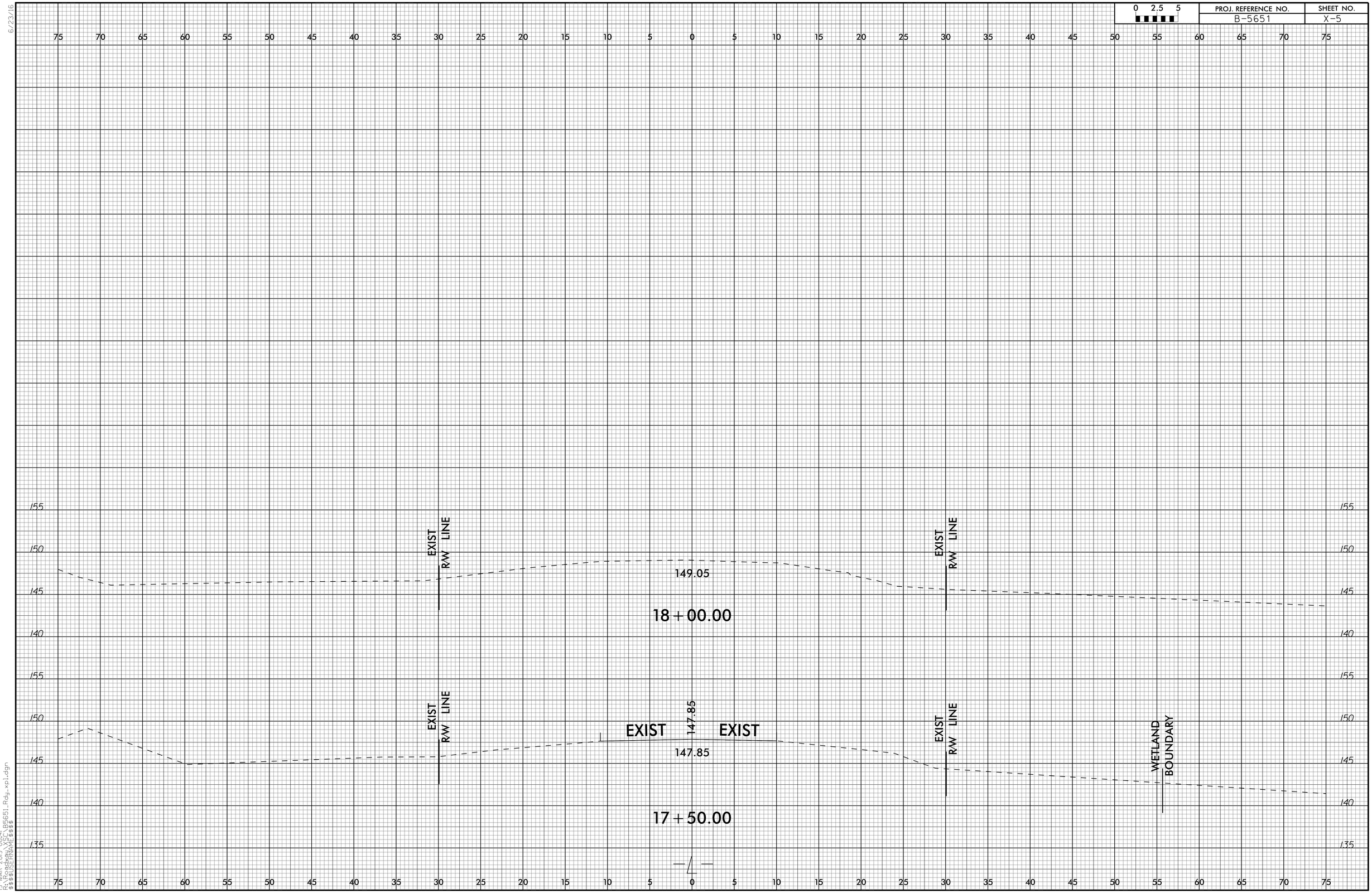

19-MAR-2019 08:41
R:\Roadway\Proj\B5651_Rdy_xpl.dgn
$$$$USERNAME$$$$

DocuSign Envelope ID: 616F2EEF-EE65-45E5-A032-EE01B0061212

F.A. PROJECT NO.: BRZ-1706(005)

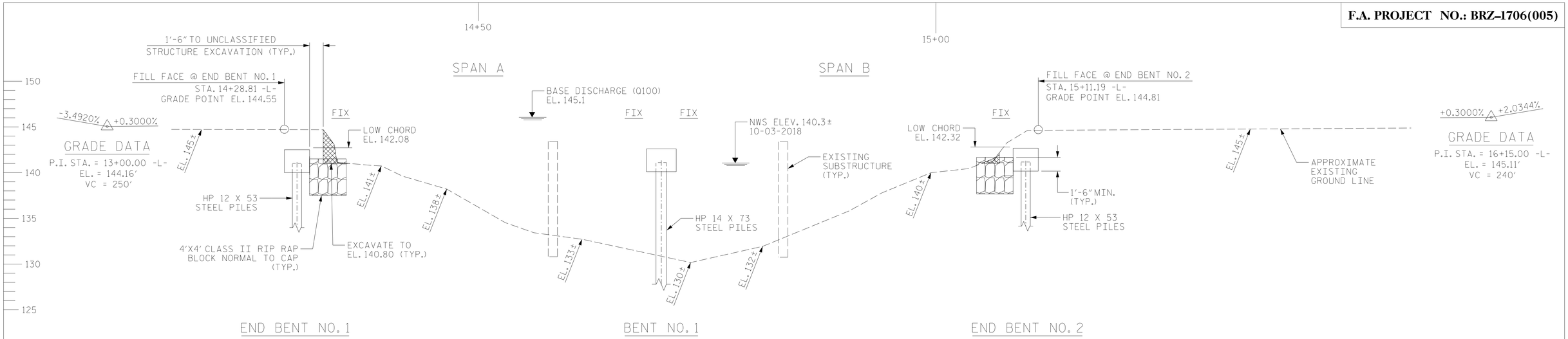

SECTION ALONG ℄ SURVEY -L-

UNCLASSIFIED STRUCTURE EXCAVATION

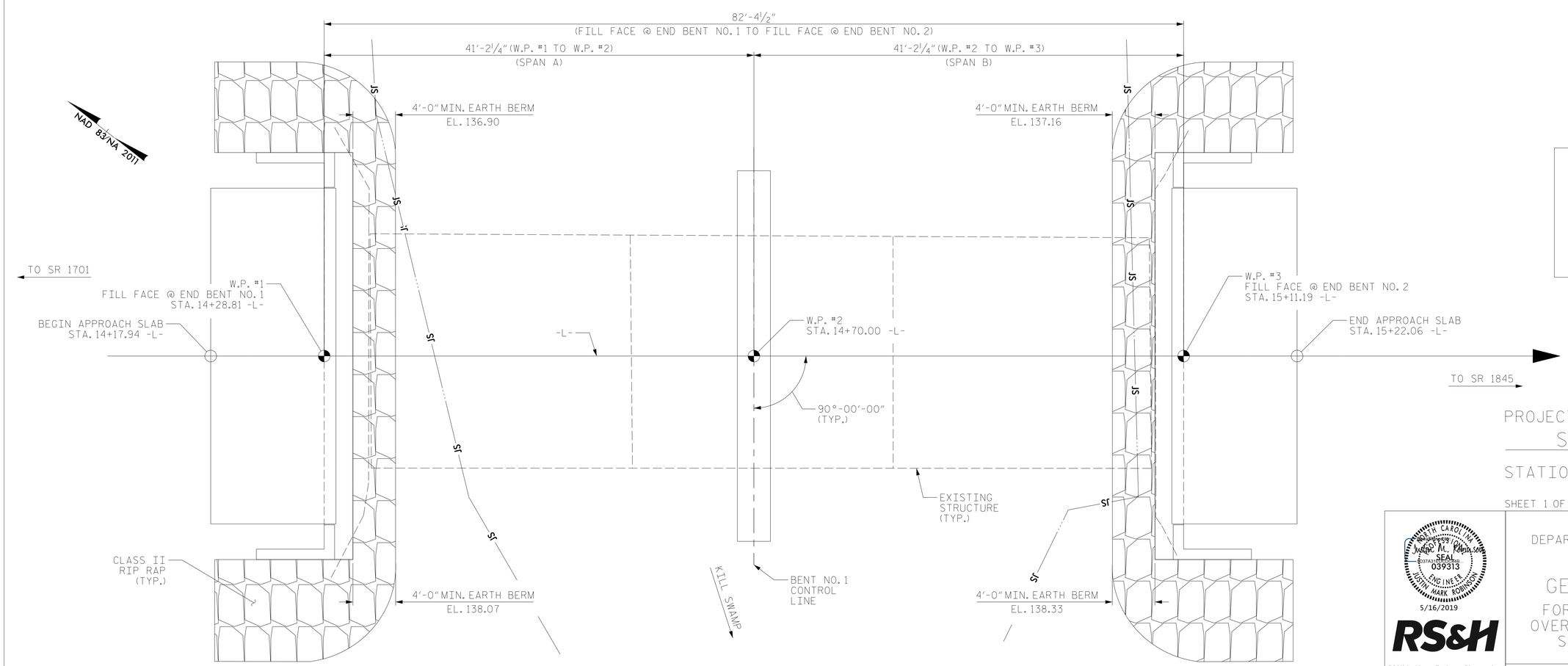

PLAN

(PILES NOT SHOWN FOR CLARITY)

I HEREBY CERTIFY THESE PLANS ARE THE AS-BUILT PLANS

PROJECT NO. B-5651

SAMPSON COUNTY

STATION: 14+70.00 -L-

SHEET 1 OF 3 REPLACES BRIDGE NO. 810214

NORTH CAROLINA PROFESSIONAL ENGINEER SEAL 039313 JUSTIN MARK ROBINSON

5/16/2019

RS&H

RS&H Architects-Engineers-Planners, Inc.
8521 Six Forks Road, Suite 400
919-926-4100 FAX 919-846-9080
www.rsandh.com
North Carolina License Nos. 50073 * F-0493 * C-28

STATE OF NORTH CAROLINA
DEPARTMENT OF TRANSPORTATION
RALEIGH

GENERAL DRAWING
FOR BRIDGE ON SR 1706
OVER KILL SWAMP BETWEEN
SR 1701 AND SR 1845

REVISIONS						SHEET NO.
NO.	BY:	DATE:	NO.	BY:	DATE:	S-1
1			3			TOTAL SHEETS
2			4			17

DOCUMENT NOT CONSIDERED FINAL UNLESS ALL SIGNATURES COMPLETED

DRAWN BY :	NSC	DATE :	02/2019
CHECKED BY :	MKO	DATE :	02/2019
DESIGN ENGINEER OF RECORD:	JMR	DATE :	02/2019

5/7/2019
\\rsandh.com\files\Transportation\P\1030036019 Div 3 Sampson 214 B-5651\Design\Structures\CAD\401_001_B5651_SMU_GD1_S-1.dgn
CuanyN

DocuSign Envelope ID: 616F2EEF-EE65-45E5-A032-EE01B0061212

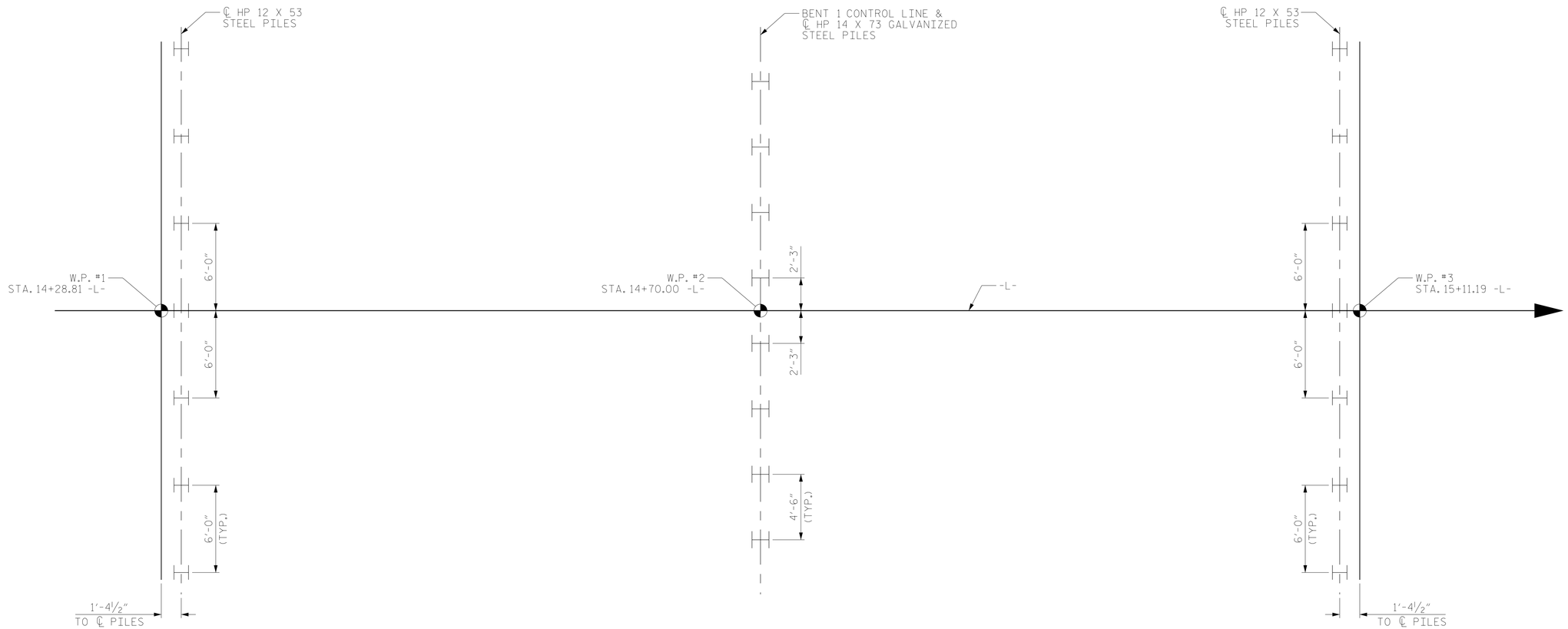

FOUNDATION LAYOUT

FOUNDATION NOTES:

FOR PILES, SEE SECTION 450 OF THE STANDARD SPECIFICATIONS.

PILES AT END BENT NO. 1 ARE DESIGNED FOR A FACTORED RESISTANCE OF 59 TONS PER PILE.

PILES AT BENT NO. 1 ARE DESIGNED FOR A FACTORED RESISTANCE OF 88 TONS PER PILE.

PILES AT END BENT NO. 2 ARE DESIGNED FOR A FACTORED RESISTANCE OF 59 TONS PER PILE.

DRIVE PILES AT END BENT NO. 1 TO A REQUIRED DRIVING RESISTANCE OF 100 TONS PER PILE.

DRIVE PILES AT BENT NO. 1 TO A REQUIRED DRIVING RESISTANCE OF 150 TONS PER PILE.

DRIVE PILES AT END BENT NO. 2 TO A REQUIRED DRIVING RESISTANCE OF 100 TONS PER PILE.

INSTALL PILES AT BENT NO. 1 TO A TIP ELEVATION NO HIGHER THAN 105.0 FT.

THE SCOUR CRITICAL ELEVATIONS FOR BENT NO. 1 IS ELEVATION 124.0 FT. SCOUR CRITICAL ELEVATIONS ARE USED TO MONITOR POSSIBLE SCOUR PROBLEMS DURING THE LIFE OF THE STRUCTURE.

TESTING PILES WITH THE PDA DURING DRIVING, RESTRIKING OR REDRIVING MAY BE REQUIRED. THE ENGINEER WILL DETERMINE THE NEED FOR PDA TESTING. FOR PDA TESTING, SEE SECTION 450 OF THE STANDARD SPECIFICATION.

PROJECT NO. B-5651
SAMPSON COUNTY
STATION: 14+70.00 -L-

SHEET 2 OF 3

NORTH CAROLINA PROFESSIONAL SEAL 039313 ENGINEER JUSTIN MARK ROBINSON
5/16/2019

RS&H

RS&H Architects-Engineers-Planners, Inc.
8521 Six Forks Road, Suite 400
919-926-4100 FAX 919-846-9080
www.rsandh.com
North Carolina License Nos. 50073 * F-0493 * C-28

STATE OF NORTH CAROLINA
DEPARTMENT OF TRANSPORTATION
RALEIGH

GENERAL DRAWING
FOR BRIDGE ON SR 1706
OVER KILL SWAMP BETWEEN
SR 1701 AND SR 1845

REVISIONS						SHEET NO.
NO.	BY:	DATE:	NO.	BY:	DATE:	S-2
1			3			TOTAL SHEETS
2			4			17

DOCUMENT NOT CONSIDERED FINAL UNLESS ALL SIGNATURES COMPLETED

DRAWN BY :	NSC	DATE :	02/2019
CHECKED BY :	MKO	DATE :	02/2019
DESIGN ENGINEER OF RECORD:	JMR	DATE :	02/2019

5/7/2019
\\rsandh.com\files\Transportation\P\1030036019 Div 3 Sampson 214 B-5651\Design\Structures\CAD\401_003_B5651_SMU_GD2_S-2.dgn
CuanyN

DocuSign Envelope ID: 616F2EEF-EE65-45E5-A032-EE01B0061212

BM#1: RR SPIKE IN 28" CYPRESS 83.56' RT. OF STA. 14+20.46 -L-, EL. 142.25

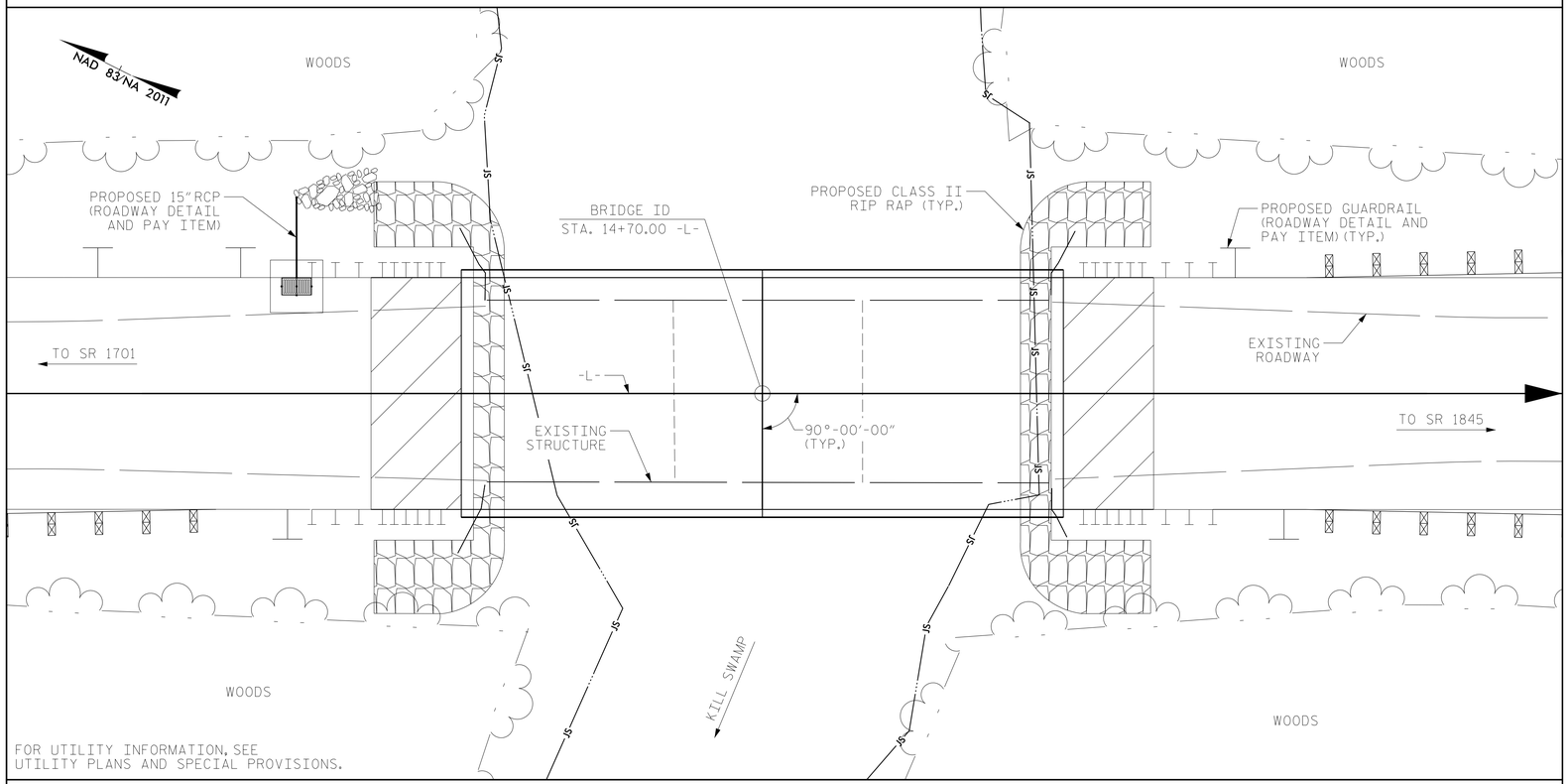

LOCATION SKETCH

NOTES:

ASSUMED LIVE LOAD = HL 93 OR ALTERNATE LOADING.

THIS BRIDGE HAS BEEN DESIGNED IN ACCORDANCE WITH THE AASHTO LRFD BRIDGE DESIGN SPECIFICATIONS.

THIS BRIDGE IS LOCATED IN SEISMIC ZONE 1.

FOR SUBMITTAL OF WORKING DRAWINGS, SEE SPECIAL PROVISIONS.

FOR FALSEWORK AND FORMWORK, SEE SPECIAL PROVISIONS.

FOR CRANE SAFETY, SEE SPECIAL PROVISIONS.

FOR GROUT FOR STRUCTURES, SEE SPECIAL PROVISIONS.

FOR EROSION CONTROL MEASURES, SEE EROSION CONTROL PLAN.

FOR ASBESTOS ASSESSMENT FOR BRIDGE DEMOLITION AND RENOVATION ACTIVITIES, SEE SPECIAL PROVISIONS.

FOR OTHER DESIGN DATA AND GENERAL NOTES, SEE SHEET SN.

THE MATERIAL SHOWN IN THE CROSS-HATCHED AREA ON SHEET 1 OF 3 SHALL BE EXCAVATED FOR A DISTANCE OF 14 FT LEFT AND 26 FT RIGHT FOR END BENT NO. 1 AND 11 FT LEFT AND 27 FT RIGHT FOR END BENT NO. 2 OF CENTERLINE ROADWAY AS DIRECTED BY THE ENGINEER. THIS WORK WILL BE PAID FOR AT THE CONTRACT LUMP SUM PRICE FOR UNCLASSIFIED STRUCTURE EXCAVATION. SEE SECTION 412 OF THE STANDARD SPECIFICATIONS.

THE EXISTING STRUCTURE CONSISTS OF 2 SPAN @ 25'-6" AND 1 SPAN @ 25'-0" WITH PRESTRESSED CONCRETE CHANNELS WITH A CLEAR ROADWAY OF 24'-0" ON REINFORCED CONCRETE CAPS AND TIMBER PILES AT END BENTS 1 AND 2 AND INTERIOR BENTS 1 AND 2 SHALL BE REMOVED. THE EXISTING BRIDGE IS PRESENTLY POSTED FOR LOAD LIMIT. SHOULD THE STRUCTURAL INTEGRITY OF THE BRIDGE DETERIORATE DURING CONSTRUCTION OF THE PROPOSED BRIDGE, A LOAD LIMIT MAY BE POSTED AND MAY BE REDUCED AS FOUND NECESSARY DURING THE LIFE OF THE PROJECT.

THE SUBSTRUCTURE OF THE EXISTING BRIDGE INDICATED ON THE PLANS IS THE BEST INFORMATION AVAILABLE. THIS INFORMATION IS SHOWN FOR THE CONVENIENCE OF THE CONTRACTOR. THE CONTRACTOR SHALL HAVE NO CLAIM WHATSOEVER AGAINST THE DEPARTMENT OF TRANSPORTATION FOR ANY DELAYS OR ADDITIONAL COST INCURRED BASED ON DIFFERENCES BETWEEN THE EXISTING BRIDGE SUBSTRUCTURE SHOWN ON THE PLANS AND THE ACUAL CONDITION AT THE PROJECT SITE.

REMOVAL OF THE EXISTING BRIDGE SHALL BE PERFORMED IN A MANNER THAT PREVENTS DEBRIS FROM FALLING INTO THE WATER. THE CONTRACTOR SHALL SUBMIT DEMOLITION PLANS FOR REVIEW AND REMOVE THE BRIDGE IN ACCORDANCE WITH ARTICLE 402-2 OF THE STANDARD SPECIFICATIONS.

THE CONTRACTOR SHALL PROVIDE INDEPENDENT ASSURANCE SAMPLES OF REINFORCING STEEL AS FOLLOWS: FOR PROJECTS REQUIRING UP TO 400 TONS OF REINFORCING STEEL, ONE 30 INCH SAMPLE OF EACH SIZE BAR USED, AND FOR PROJECTS REQUIRING OVER 400 TONS OF REINFORCING STEEL, TWO 30 INCH SAMPLES OF EACH SIZE BAR USED. THE SAMPLE BARS SHOULD COME FROM STEEL ACTUALLY USED IN THE PROJECT AND THE SAMPLE BARS SHOULD BE REPLACED BY SPLICED BARS AS SPECIFIED IN THE SAMPLE BAR REPLACEMENT CHART. PAYMENT FOR THE SAMPLE BARS AND REPLACEMENT REINFORCING STEEL SHALL BE CONSIDERED INCIDENTAL TO VARIOUS PAY ITEMS.

THIS STRUCTURE HAS BEEN DESIGNED IN ACCORDANCE WITH "HEC 18 - EVALUATING SCOUR AT BRIDGES."

ASPHALT WEARING SURFACE IS INCLUDED IN THE ROADWAY QUANTITIY ON ROADWAY PLANS.

FOR INTERIOR BENT NO 1, ONLY PARTIAL GALVANIZING OF THE PILES IS REQUIRED. SEE INTERIOR BENT SHEETS FOR REQUIRED GALVANIZED LENGTHS. PAYMENT FOR PARTIALLY GALVANIZED PILES WILL BE MADE UNDER THE CONTRACT UNIT PRICE FOR GALVANIZED STEEL PILES.

TOTAL BILL OF MATERIALS

	REMOVAL OF EXISTING STRUCTURE @ STA. 14+70.00 -L-	ASBESTOS ASSESSMENT	PDA TESTING	UNCLASSIFIED STRUCTURE EXCAVATION @ STA. 14+70.00 -L-	CLASS A CONCRETE	BRIDGE APPROACH SLABS	REINFORCING STEEL	PILE DRIVING EQUIPMENT SETUP FOR HP 12 X 53 STEEL PILES	PILE DRIVING EQUIPMENT SETUP FOR HP 14 X 73 GALVANIZED STEEL PILES
	LUMP SUM	LUMP SUM	EACH	LUMP SUM	CU. YDS.	LUMP SUM	LBS.	NO.	NO.
SUPERSTRUCTURE									
END BENT NO. 1					14.2		2,115	7	
BENT NO. 1					10.7		2,136		8
END BENT NO. 2					14.2		2,115	7	
TOTAL	LUMP SUM	LUMP SUM	1	LUMP SUM	39.1	LUMP SUM	6,366	14	8

	HP 12 X 53 STEEL PILES		HP 14 X 73 GALVANIZED STEEL PILES		PILE REDRIVES	VERTICAL CONCRETE BARRIER RAIL	RIP RAP CLASS II	GEOTEXTILE FOR DRAINAGE	ELASTOMERIC BEARINGS	3'-0" X 1'-9" PRESTRESSED CONCRETE CORED SLABS	
	NO.	LIN. FT.	NO.	LIN. FT.	EACH	LIN. FT.	TONS	SQ. YDS.	LUMP SUM	NO.	LIN. FT.
SUPERSTRUCTURE						160.5				22	880.0
END BENT NO. 1	7	385			3		95	50			
BENT NO. 1			8	600	4						
END BENT NO. 2	7	420			3		95	50			
TOTAL	14	805	8	600	10	160.5	190	100	LUMP SUM	22	880.0

SAMPLE BAR REPLACEMENT

SIZE	LENGTH
#3	6'-2"
#4	7'-4"
#5	8'-6"
#6	9'-8"
#7	10'-10"
#8	12'-0"
#9	13'-2"
#10	14'-6"
#11	15'-10"

NOTE:
SAMPLE BAR REPLACEMENT LENGTHS BASED ON 30" (SAMPLE LENGTH) PLUS TWO SPLICE LENGTHS AND Fy = 60 KSI.

HYDRAULIC DATA

DESIGN DISCHARGE	= 830 CFS
FREQUENCY OF THE DESIGN FLOOD	= 25 YRS
DESIGN OF HIGH WATER ELEVATION	= 142.9 FT
DRAINAGE AREA	= 7.55 SQ. MI.
BASE DISCHARGE (Q100)	= 1300 CFS
BASE HIGH WATER ELEVATION	= 145.1 FT.

OVERTOPPING FLOOD DATA

OVERTOPPING DISCHARGE	= 1260 CFS
FREQUENCY OF OVERTOPPING FLOOD	= 50+ YRS
* OVERTOPPING FLOOD ELEVATION	= 144.8 FT

* SAG @ STA. 14+05.22 -L-

PROJECT NO. B-5651
SAMPSON COUNTY
STATION: 14+70.00 -L-

SHEET 3 OF 3

NORTH CAROLINA PROFESSIONAL SEAL 039313 ENGINEER JUSTIN MARK ROBINSON
5/16/2019

RS&H

RS&H Architects-Engineers-Planners, Inc.
8521 Six Forks Road, Suite 400
919-926-4100 FAX 919-846-9080
www.rsandh.com
North Carolina License Nos. 50073 * F-0493 * C-28

STATE OF NORTH CAROLINA
DEPARTMENT OF TRANSPORTATION
RALEIGH

GENERAL DRAWING
FOR BRIDGE ON SR 1706 OVER KILL SWAMP BETWEEN SR 1701 AND SR 1845

REVISIONS						SHEET NO.
NO.	BY:	DATE:	NO.	BY:	DATE:	S-3
1			3			TOTAL SHEETS
2			4			17

DOCUMENT NOT CONSIDERED FINAL UNLESS ALL SIGNATURES COMPLETED

DRAWN BY :	NSC	DATE :	02/2019
CHECKED BY :	MKO	DATE :	02/2019
DESIGN ENGINEER OF RECORD:	JMR	DATE :	02/2019

5/7/2019
\\rsandh.com\files\Transportation\P\1030036019 Div 3 Sampson 214 B-5651\Design\Structures\CAD\401_005_B5651_SMU_GD3_S-3.dgn
CuanyN

DocuSign Envelope ID: 616F2EEF-EE65-45E5-A032-EE01B0061212

LOAD AND RESISTANCE FACTOR RATING (LRFD) SUMMARY FOR PRESTRESSED CONCRETE GIRDERS

LEVEL		VEHICLE	WEIGHT (W) (TONS)	CONTROLLING LOAD RATING	MINIMUM RATING FACTORS (RF)	TONS = W X RF	STRENGTH I LIMIT STATE											SERVICE III LIMIT STATE						COMMENT NUMBER
								MOMENT					SHEAR						MOMENT					
							LIVELOAD FACTORS	DISTRIBUTION FACTORS (DF)	RATING FACTOR	SPAN	GIRDER LOCATION	DISTANCE FROM LEFT END OF SPAN (ft)	DISTRIBUTION FACTORS (DF)	RATING FACTOR	SPAN	GIRDER LOCATION	DISTANCE FROM LEFT END OF SPAN (ft)	LIVELOAD FACTORS	DISTRIBUTION FACTORS (DF)	RATING FACTOR	SPAN	GIRDER LOCATION	DISTANCE FROM LEFT END OF SPAN (ft)	
DESIGN LOAD RATING		HL-93(Inv)	N/A	1	1.319	--	1.75	0.278	1.76	40'	EL	19.5	0.549	1.32	40'	EL	1.95	0.80	0.278	1.55	40'	EL	19.5	
		HL-93(Opr)	N/A	--	1.709	--	1.35	0.278	2.28	40'	EL	19.5	0.549	1.71	40'	EL	1.95	N/A	--	--	--	--	--	
		HS-20(Inv)	36.000	2	1.540	55.449	1.75	0.278	2.21	40'	EL	19.5	0.549	1.54	40'	EL	1.95	0.80	0.278	1.94	40'	EL	19.5	
		HS-20(Opr)	36.000	--	1.997	71.878	1.35	0.278	2.86	40'	EL	19.5	0.549	2	40'	EL	1.95	N/A	--	--	--	--	--	
LEGAL LOAD RATING	SV	SNSH	13.500	--	3.606	48.687	1.4	0.278	5.1	40'	EL	19.5	0.549	4.13	40'	EL	1.95	0.80	0.278	3.61	40'	EL	19.5	
		SNGARBS2	20.000	--	2.964	59.289	1.4	0.278	4.19	40'	EL	15.6	0.549	3.07	40'	EL	1.95	0.80	0.278	2.96	40'	EL	19.5	
		SNAGRIS2	22.000	--	2.906	63.929	1.4	0.278	4.09	40'	EL	15.6	0.549	2.91	40'	EL	1.95	0.80	0.278	2.92	40'	EL	15.6	
		SNCOTTS3	27.250	--	1.803	49.125	1.4	0.278	2.55	40'	EL	19.5	0.549	2.07	40'	EL	1.95	0.80	0.278	1.80	40'	EL	19.5	
		SNAGGRS4	34.925	--	1.623	56.667	1.4	0.278	2.29	40'	EL	19.5	0.549	1.82	40'	EL	1.95	0.80	0.278	1.62	40'	EL	19.5	
		SNS5A	35.550	--	1.578	56.107	1.4	0.278	2.23	40'	EL	19.5	0.549	1.9	40'	EL	1.95	0.80	0.278	1.58	40'	EL	19.5	
		SNS6A	39.950	--	1.502	59.992	1.4	0.278	2.12	40'	EL	19.5	0.549	1.77	40'	EL	1.95	0.80	0.278	1.50	40'	EL	19.5	
		SNS7B	42.000	3	1.432	60.149	1.4	0.278	2.02	40'	EL	19.5	0.549	1.81	40'	EL	1.95	0.80	0.278	1.43	40'	EL	19.5	
	TTST	TNAGRIT3	33.000	--	1.848	60.976	1.4	0.278	2.61	40'	EL	19.5	0.549	2.08	40'	EL	1.95	0.80	0.278	1.85	40'	EL	19.5	
		TNT4A	33.075	--	1.872	61.901	1.4	0.278	2.65	40'	EL	19.5	0.549	1.98	40'	EL	1.95	0.80	0.278	1.87	40'	EL	19.5	
		TNT6A	41.600	--	1.587	66.032	1.4	0.278	2.24	40'	EL	19.5	0.549	1.94	40'	EL	1.95	0.80	0.278	1.59	40'	EL	19.5	
		TNT7A	42.000	--	1.627	68.354	1.4	0.278	2.3	40'	EL	19.5	0.549	1.79	40'	EL	1.95	0.80	0.278	1.63	40'	EL	19.5	
		TNT7B	42.000	--	1.664	69.888	1.4	0.278	2.35	40'	EL	19.5	0.549	1.72	40'	EL	1.95	0.80	0.278	1.66	40'	EL	19.5	
		TNAGRIT4	43.000	--	1.619	69.61	1.4	0.278	2.28	40'	EL	15.6	0.549	1.65	40'	EL	1.95	0.80	0.278	1.62	40'	EL	19.5	
		TNAGT5A	45.000	--	1.498	67.412	1.4	0.278	2.12	40'	EL	19.5	0.549	1.71	40'	EL	1.95	0.80	0.278	1.50	40'	EL	19.5	
		TNAGT5B	45.000	--	1.455	65.486	1.4	0.278	2.06	40'	EL	19.5	0.549	1.56	40'	EL	1.95	0.80	0.278	1.46	40'	EL	19.5	

LOAD FACTORS:

DESIGN LOAD RATING FACTORS	LIMIT STATE	γ_{DC}	γ_{DW}
	STRENGTH I	1.25	1.50
	SERVICE III	1.00	1.00

NOTES:

MINIMUM RATING FACTORS ARE BASED ON THE STRENGTH I AND SERVICE III LIMIT STATES.

ALLOWABLE STRESSES FOR SERVICE III LIMIT STATE ARE AS REQUIRED FOR DESIGN.

COMMENTS:

1.
2.
3.
4.

CONTROLLING LOAD RATING
1 DESIGN LOAD RATING (HL-93)
2 DESIGN LOAD RATING (HS-20)
3 LEGAL LOAD RATING **
** SEE CHART FOR VEHICLE TYPE

GIRDER LOCATION
I - INTERIOR GIRDER
EL - EXTERIOR LEFT GIRDER
ER - EXTERIOR RIGHT GIRDER

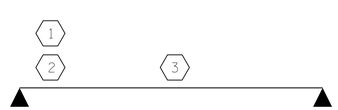

LRFR SUMMARY

FOR SPANS A & B

PROJECT NO. B-5651

SAMPSON COUNTY

STATION: 14+70.00 -L-

NORTH CAROLINA PROFESSIONAL SEAL 039313 ENGINEER JUSTIN MARK ROBINSON

5/16/2019

RS&H

RS&H Architects-Engineers-Planners, Inc.
8521 Six Forks Road, Suite 400
919-926-4100 FAX 919-846-9080
www.rsandh.com
North Carolina License Nos. 50073 * F-0493 * C-28

STATE OF NORTH CAROLINA
DEPARTMENT OF TRANSPORTATION
RALEIGH

STANDARD
LRFR SUMMARY FOR 40' CORED SLAB UNIT 90° SKEW
(NON-INTERSTATE TRAFFIC)

REVISIONS						SHEET NO.
NO.	BY:	DATE:	NO.	BY:	DATE:	S-4
1			3			TOTAL SHEETS
2			4			17

DOCUMENT NOT CONSIDERED FINAL UNLESS ALL SIGNATURES COMPLETED

ASSEMBLED BY :	NSC	DATE :	02/19
CHECKED BY :	MKO	DATE :	02/19
DRAWN BY : CVC	6/10		
CHECKED BY : DNS	6/10		

5/7/2019
\\rsandh.com\files\Transportation\P\1030036019 Div 3 Sampson 214 B-5651\Design\Structures\CAD\401_007_B5651_SMU_LRFR_S-4.dgn
CuanyN

STD. NO. 21LRFR1_90S_40L

DocuSign Envelope ID: 616F2EEF-EE65-45E5-A032-EE01B0061212

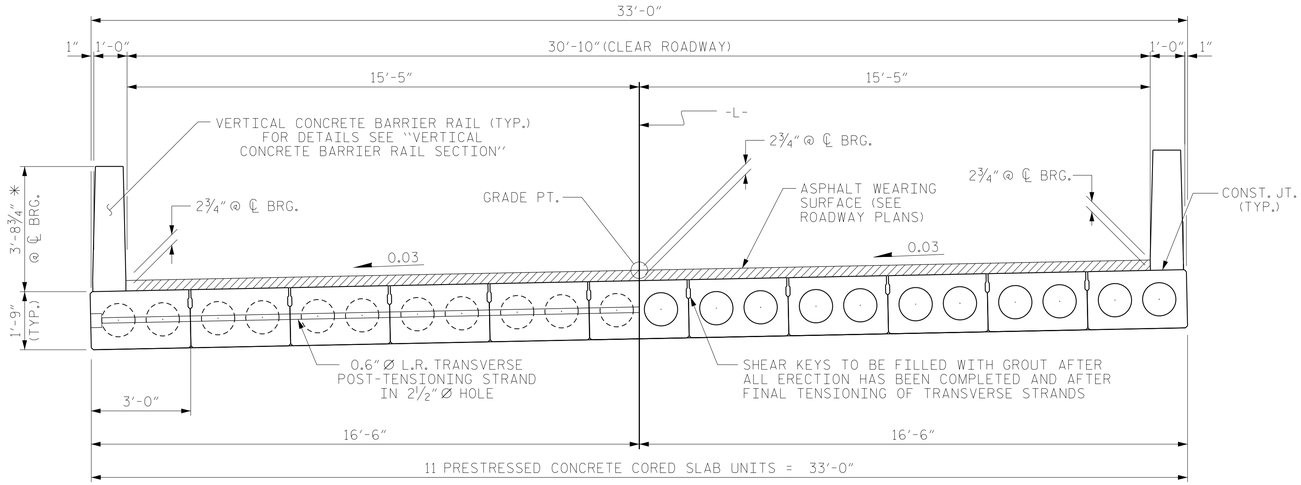

HALF SECTION AT INTERMEDIATE DIAPHRAGMS

HALF SECTION THROUGH VOIDS

TYPICAL SECTION - SPANS A & B

* - THE MAXIMUM BARRIER RAIL HEIGHT AND ASPHALT THICKNESS IS SHOWN. THE HEIGHT OF THE BARRIER RAIL AND ASPHALT THICKNESS VARIES WHILE THE TOP OF THE BARRIER RAIL FOLLOWS THE PROFILE OF THE GUTTERLINE. FOR RAIL HEIGHT DETAILS AND ASPHALT THICKNESS SEE THE "VERTICAL CONCRETE BARRIER RAIL SECTION" DETAIL.

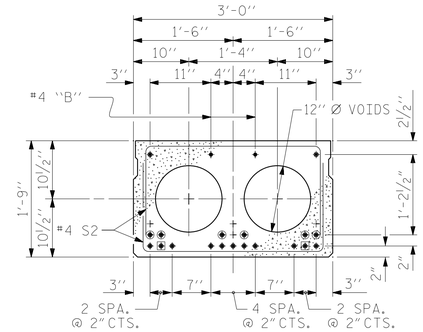

INTERIOR SLAB SECTION (40' UNIT)

(13 STRANDS REQUIRED)

0.6" Ø LOW RELAXATION STRAND LAYOUT

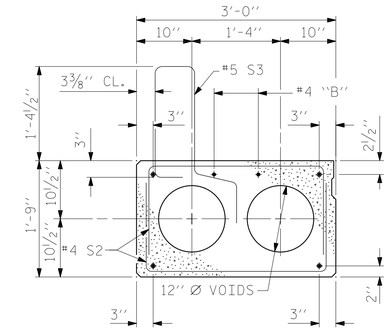

EXT. SLAB SECTION

(FOR PRESTRESSED STRAND LAYOUT, SEE INTERIOR SLAB SECTION.)

◉ BOND SHALL BE BROKEN ON THESE STRANDS FOR A DISTANCE OF 2'-0" FROM END OF CORED SLAB UNIT. SEE STANDARD SPECIFICATIONS, ARTICLE 1078-7.

◉ OPTIONAL FULL LENGTH DEBONDED STRANDS. THESE STRANDS ARE NOT REQUIRED. IF THE FABRICATOR CHOOSES TO INCLUDE THESE STRANDS IN THE CORED SLAB UNIT, THE STRANDS SHALL BE DEBONDED FOR THE FULL LENGTH OF THE UNIT AT NO ADDITIONAL COST. SEE STANDARD SPECIFICATIONS, ARTICLE 1078-7.

DEBONDING LEGEND

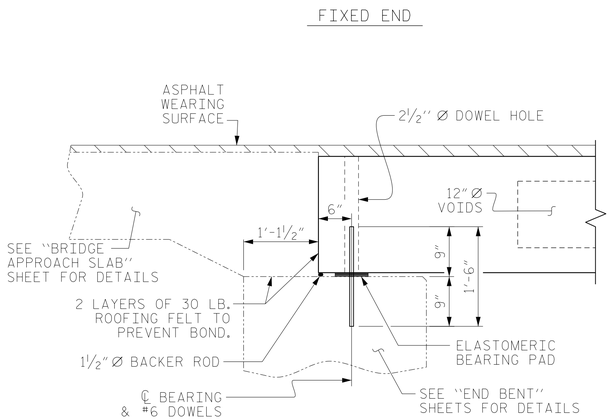

SECTION AT END BENT

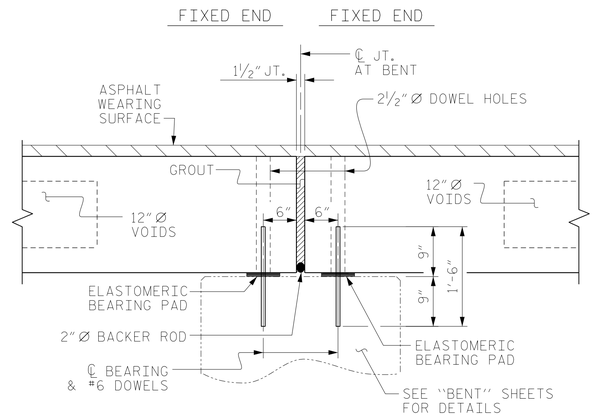

SECTION AT BENT

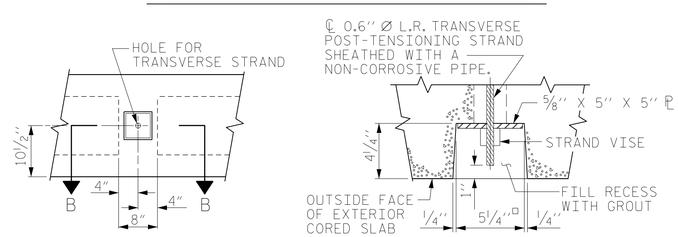

ELEVATION VIEW

SECTION B-B

GROUTED RECESS AT END OF POST-TENSIONED STRAND OF CORED SLABS

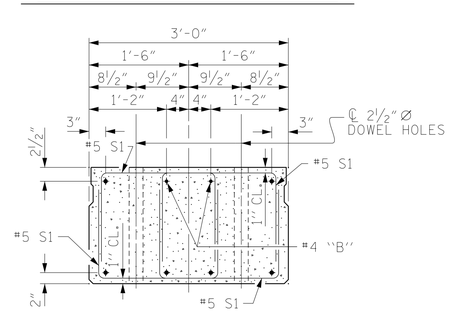

END ELEVATION

SHOWING PLACEMENT OF DOUBLE STIRRUPS AND LOCATION OF DOWEL HOLES. (STRAND LAYOUT NOT SHOWN.) INTERIOR SLAB UNIT SHOWN-EXTERIOR SLAB UNIT SIMILAR EXCEPT SHEAR KEY LOCATION.

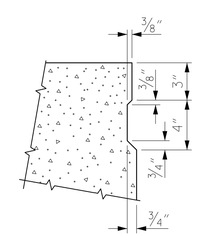

SHEAR KEY DETAIL

NOTE: OMIT SHEAR KEY ON OUTSIDE FACE OF EXTERIOR CORED SLABS.

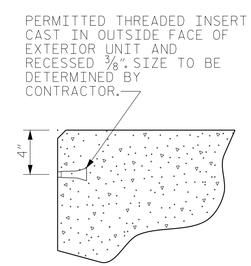

THREADED INSERT DETAIL

PROJECT NO. B-5651

SAMPSON COUNTY

STATION: 14+70.00 -L-

SHEET 1 OF 4

ASSEMBLED BY : NSC	DATE : 02/19		
CHECKED BY : MKO	DATE : 02/19		
DRAWN BY : DGE 5/09	REV. 9/14	MAA/TMG	
CHECKED BY : BCH 6/09			

DOCUMENT NOT CONSIDERED FINAL UNLESS ALL SIGNATURES COMPLETED

NORTH CAROLINA PROFESSIONAL SEAL 039313 ENGINEER MARTIN MARK ROBINSON
5/16/2019

RS&H

RS&H Architects-Engineers-Planners, Inc.
8521 Six Forks Road, Suite 400
919-926-4100 FAX 919-846-9080
www.rsandh.com
North Carolina License Nos. 50073 * F-0493 * C-28

STATE OF NORTH CAROLINA
DEPARTMENT OF TRANSPORTATION
RALEIGH

STANDARD
3'-0" X 1'-9"
PRESTRESSED CONCRETE CORED SLAB UNIT
90° SKEW

REVISIONS						SHEET NO.
NO.	BY:	DATE:	NO.	BY:	DATE:	S-5
1			3			TOTAL SHEETS
2			4			17

STD. NO. 21" PCS2_33_90S

5/7/2019
\\rsandh.com\files\Transportation\P\1030036019 Div 3 Sampson 214 B-5651\Design\Structures\CAD\401_009_B5651_SMU_CS_S-5.dgn
CuanyN

DocuSign Envelope ID: 616F2EEF-EE65-45E5-A032-EE01B0061212

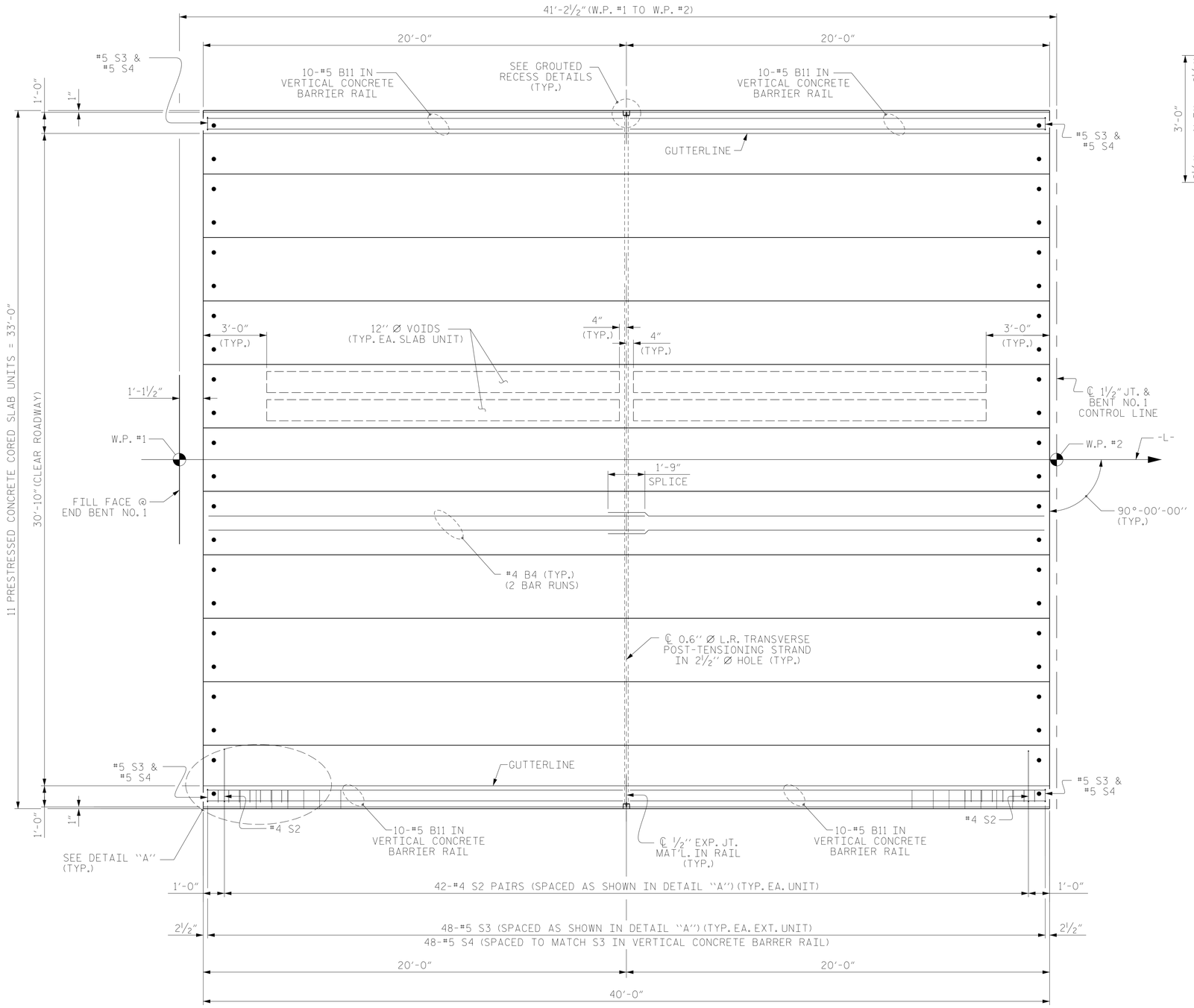

PLAN OF UNIT

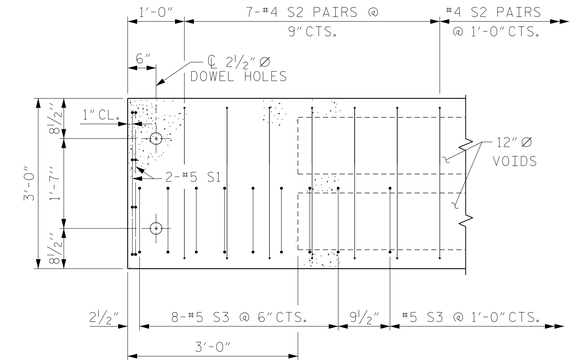

DETAIL "A"

(TYPICAL EACH END OF UNIT)
NOTE: EXTERIOR UNIT SHOWN - INTERIOR UNIT SIMILAR EXCEPT OMIT #5 S3 BARS.

PROJECT NO. B-5651
SAMPSON COUNTY
STATION: 14+70.00 -L-

SHEET 2 OF 4

ASSEMBLED BY :	NSC	DATE :	02/19
CHECKED BY :	MKO	DATE :	02/19
DRAWN BY : DGE	3/09	REV. 12/5/11	MAA/AAC
CHECKED BY : BCH	3/09	REV. 8/14	MAA/TMG

DOCUMENT NOT CONSIDERED FINAL UNLESS ALL SIGNATURES COMPLETED

NORTH CAROLINA PROFESSIONAL SEAL 039313 ENGINEER JUSTIN MARK ROBINSON
5/16/2019

RS&H

RS&H Architects-Engineers-Planners, Inc.
8521 Six Forks Road, Suite 400
919-926-4100 FAX 919-846-9080
www.rsandh.com
North Carolina License Nos. 50073 * F-0493 * C-28

STATE OF NORTH CAROLINA
DEPARTMENT OF TRANSPORTATION
RALEIGH

PLAN OF 40' UNIT
30'-10" CLEAR ROADWAY
90° SKEW
SPAN A

REVISIONS						SHEET NO.
NO.	BY:	DATE:	NO.	BY:	DATE:	S-6
1			3			TOTAL SHEETS
2			4			17

5/7/2019
\\rsandh.com\files\Transportation\P\1030036019 Div 3 Sampson 214 B-5651\Design\Structures\CAD\401_011_B5651_SMU_CS_S-6.dgn
CuanyN

STD. NO. 21" PCS_33_90S_40L

DocuSign Envelope ID: 616F2EEF-EE65-45E5-A032-EE01B0061212

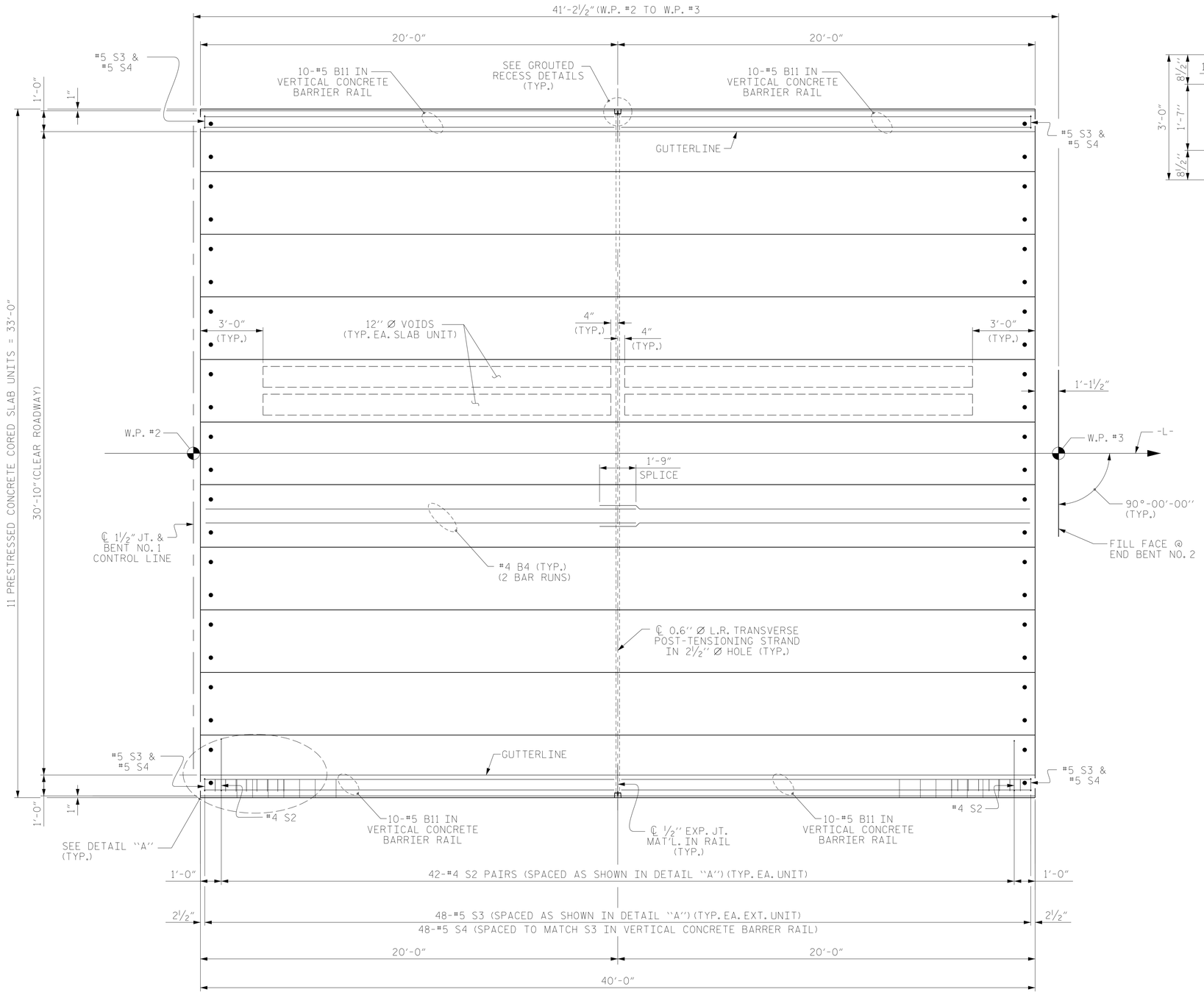

PLAN OF UNIT

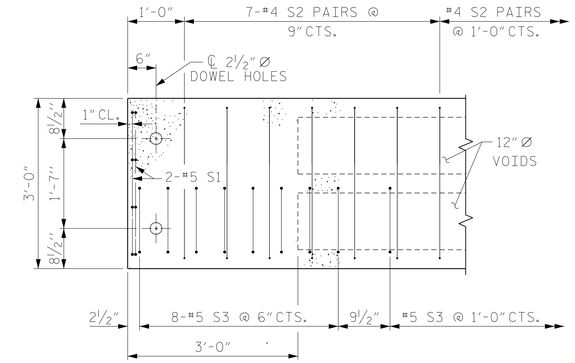

DETAIL "A"

(TYPICAL EACH END OF UNIT)
NOTE: EXTERIOR UNIT SHOWN - INTERIOR UNIT SIMILAR EXCEPT OMIT #5 S3 BARS.

PROJECT NO. B-5651
SAMPSON COUNTY
STATION: 14+70.00 -L-

SHEET 3 OF 4

ASSEMBLED BY : NSC		DATE : 02/19	
CHECKED BY : MKO		DATE : 02/19	
DRAWN BY : DGE 3/09	REV. 12/5/11	MAA/AAC	
CHECKED BY : BCH 3/09	REV. 8/14	MAA/TMG	

DOCUMENT NOT CONSIDERED FINAL UNLESS ALL SIGNATURES COMPLETED

NORTH CAROLINA PROFESSIONAL SEAL 039313 ENGINEER JUSTIN MARK ROBINSON
5/16/2019

RS&H

RS&H Architects-Engineers-Planners, Inc.
8521 Six Forks Road, Suite 400
919-926-4100 FAX 919-846-9080
www.rsandh.com
North Carolina License Nos. 50073 * F-0493 * C-28

STATE OF NORTH CAROLINA
DEPARTMENT OF TRANSPORTATION
RALEIGH

PLAN OF 40' UNIT
30'-10" CLEAR ROADWAY
90° SKEW
SPAN B

REVISIONS						SHEET NO.
NO.	BY:	DATE:	NO.	BY:	DATE:	S-7
1			3			TOTAL SHEETS
2			4			17

5/7/2019
\\rsandh.com\files\Transportation\P\1030036019 Div 3 Sampson 214 B-5651\Design\Structures\CAD\401_013_B5651_SMU_CS_S-7.dgn
CuanyN

STD. NO. 21" PCS_33_90S_40L

DocuSign Envelope ID: 616F2EEF-EE65-45E5-A032-EE01B0061212

GUTTERLINE ASPHALT THICKNESS & RAIL HEIGHT

30'-10" CLEAR ROADWAY	ASPHALT OVERLAY THICKNESS	RAIL HEIGHT
	@ MID-SPAN	@ MID-SPAN
40' UNITS	2"	3'-8"

CORED SLABS REQUIRED

	NUMBER	LENGTH	TOTAL LENGTH
40' UNIT			
EXTERIOR C.S.	4	40'-0"	160'-0"
INTERIOR C.S.	18	40'-0"	720'-0"
TOTAL	22	40'-0"	880'-0"

BILL OF MATERIAL FOR VERTICAL CONCRETE BARRIER RAIL

BAR	BARS PER PAIR OF EXTERIOR UNITS	TOTAL NO.	SIZE	TYPE	LENGTH	WEIGHT
	40' UNIT					
✳ B11	40	80	#5	STR	19'-7"	1634
✳ S4	96	192	#5	2	7'-2"	1436
✳ EPOXY COATED REINFORCING STEEL				LBS.		3070
CLASS AA CONCRETE				CU.YDS.		20.4
TOTAL VERTICAL CONCRETE BARRIER RAIL				LN. FT.		160.50

CONCRETE RELEASE STRENGTH

UNIT	PSI
40' UNITS	4000

BAR TYPES

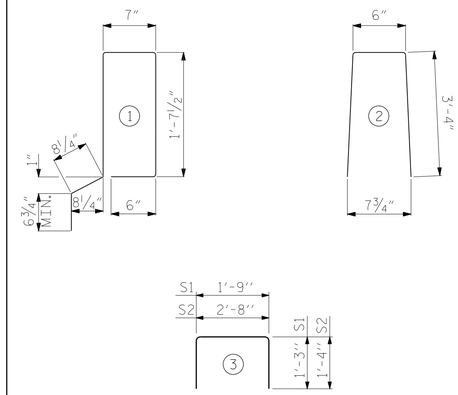

ALL BAR DIMENSIONS ARE OUT TO OUT

NOTES

ALL PRESTRESSING STRANDS SHALL BE 7-WIRE LOW RELAXATION GRADE 270 STRANDS AND SHALL CONFORM TO AASHTO M203 EXCEPT FOR SAMPLING REQUIREMENTS WHICH SHALL BE IN ACCORDANCE WITH THE STANDARD SPECIFICATIONS.

ALL REINFORCING STEEL CAST WITH THE CORED SLAB SECTIONS SHALL BE GRADE 60 AND SHALL BE INCLUDED IN THE UNIT PRICE BID FOR PRESTRESSED CONCRETE CORED SLABS.

RECESSES FOR TRANSVERSE STRANDS SHALL BE GROUTED AFTER THE TENSIONING OF THE STRANDS.

THE 2½" Ø DOWEL HOLES AT FIXED ENDS OF SLAB SECTIONS SHALL BE FILLED WITH NON-SHRINK GROUT.

THE BACKER RODS SHALL CONFORM TO THE REQUIREMENTS OF TYPE M BOND BREAKER. SEE SECTION 1028 OF THE STANDARD SPECIFICATIONS.

WHEN CORED SLABS ARE CAST, AN INTERNAL HOLD-DOWN SYSTEM SHALL BE EMPLOYED TO PREVENT VOIDS FROM RISING OR MOVING SIDEWAYS. AT LEAST SIX WEEKS PRIOR TO CASTING CORED SLABS, THE CONTRACTOR SHALL SUBMIT TO THE ENGINEER FOR REVIEW AND COMMENT, DETAILED DRAWINGS OF THE PROPOSED HOLD-DOWN SYSTEM. IN ADDITION TO STRUCTURAL DETAILS, LOCATION AND SPACING OF THE HOLD-DOWNS SHALL BE INDICATED.

ALL REINFORCING STEEL IN THE VERTICAL CONCRETE BARRIER RAIL SHALL BE EPOXY COATED.

PRESTRESSING STRANDS SHALL BE CUT FLUSH WITH THE CORED SLAB UNIT ENDS.

APPLY EPOXY PROTECTIVE COATING TO CORED SLAB UNIT ENDS.

GROOVED CONTRACTION JOINTS, ½" IN DEPTH, SHALL BE TOOLED IN ALL EXPOSED FACES OF THE BARRIER RAIL AND IN ACCORDANCE WITH ARTICLE 825-10(B) OF THE STANDARD SPECIFICATIONS. A CONTRACTION JOINT SHALL BE LOCATED AT EACH THIRD POINT BETWEEN BARRIER RAIL EXPANSION JOINTS. ONLY ONE CONTRACTION JOINT IS REQUIRED AT MIDPOINT OF BARRIER RAIL SEGMENTS LESS THAN 20 FEET IN LENGTH AND NO CONTRACTION JOINTS ARE REQUIRED FOR THOSE SEGMENTS LESS THAN 10 FEET IN LENGTH.

FLAME CUTTING OF THE TRANSVERSE POST-TENSIONING STRAND IS NOT ALLOWED.

THE TRANSFER OF LOAD FROM THE ANCHORAGES TO THE CORED SLAB UNIT SHALL BE DONE WHEN THE CONCRETE HAS REACHED A COMPRESSIVE STRENGTH OF NOT LESS THAN THE REQUIRED STRENGTH SHOWN IN THE "CONCRETE RELEASE STRENGTH" TABLE.

FOR GROUT FOR STRUCTURES, SEE SPECIAL PROVISIONS.

THE PERMITTED THREADED INSERTS ARE DETAILED AS AN OPTION FOR THE CONTRACTOR TO ATTACH FALSEWORK AND FORMWORK DURING CONSTRUCTION.

THE PERMITTED THREADED INSERTS IN THE EXTERIOR UNITS SHALL BE SIZED BY THE CONTRACTOR, SPACED AT 4'-0" CENTERS AND GALVANIZED IN ACCORDANCE WITH SECTION 1076 OF THE STANDARD SPECIFICATIONS. STAINLESS STEEL THREADED INSERTS MAY BE USED AS AN ALTERNATE.

THE PERMITTED THREADED INSERTS SHALL BE GROUTED BY THE CONTRACTOR IMMEDIATELY FOLLOWING REMOVAL OF THE FALSEWORK.

THE COST OF THE PERMITTED THREADED INSERTS SHALL BE INCLUDED IN THE PRICE BID FOR THE PRECAST UNITS.

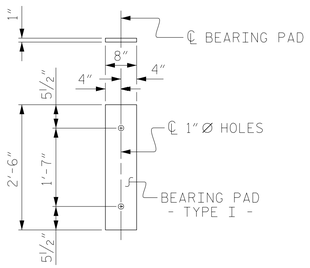

FIXED END
(TYPE I - 44 REQ'D)

ELASTOMERIC BEARING DETAILS

ELASTOMER IN ALL BEARINGS SHALL BE 50 DUROMETER HARDNESS.

BILL OF MATERIAL FOR ONE 40' CORED SLAB UNIT

				EXTERIOR UNIT		INTERIOR UNIT	
BAR	NUMBER	SIZE	TYPE	LENGTH	WEIGHT	LENGTH	WEIGHT
B4	4	#4	STR	20'-9"	55	20'-9"	55
S1	8	#5	3	4'-3"	35	4'-3"	35
S2	84	#4	3	5'-4"	299	5'-4"	299
✳ S3	48	#5	1	5'-7"	280		
REINFORCING STEEL			LBS.		389		389
✳ EPOXY COATED REINFORCING STEEL			LBS.		280		
5000 P.S.I. CONCRETE			CU. YDS.		5.8		5.8
0.6" Ø L.R. STRANDS			No.		13		13

GRADE 270 STRANDS

	0.6" Ø L.R.
AREA (SQUARE INCHES)	0.217
ULTIMATE STRENGTH (LBS. PER STRAND)	58,600
APPLIED PRESTRESS (LBS. PER STRAND)	43,950

DEAD LOAD DEFLECTION AND CAMBER

	3'-0" x 1'-9"
40' CORED SLAB UNIT	0.6" Ø L.R. STRAND
CAMBER (SLAB ALONE IN PLACE)	⅞" ↑
DEFLECTION DUE TO SUPERIMPOSED DEAD LOAD ✳✳	⅛" ↓
FINAL CAMBER	¾" ↑

✳✳ INCLUDES FUTURE WEARING SURFACE

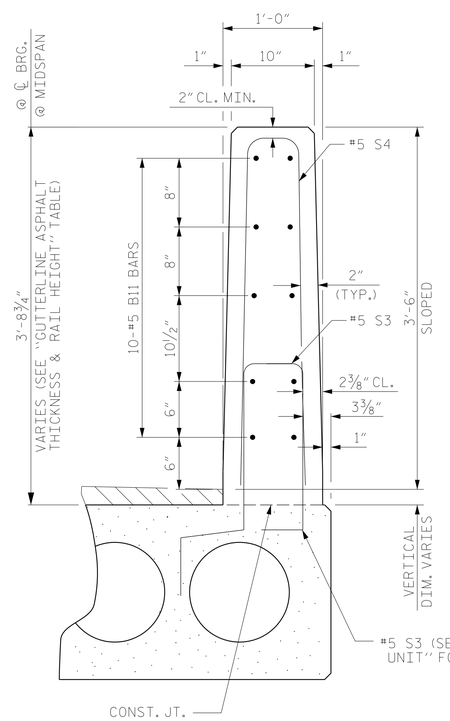

VERTICAL CONCRETE BARRIER RAIL SECTION

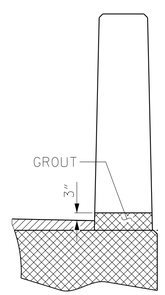

SECTION T-T
AT OPEN JOINT AT BENT
(THIS IS TO BE USED WHERE FOAM JOINT IS NOT USED)

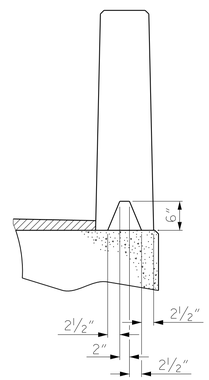

SECTION S-S
AT DAM IN OPEN JOINT
(THIS IS TO BE USED ONLY WHEN SLIP FORM IS USED)

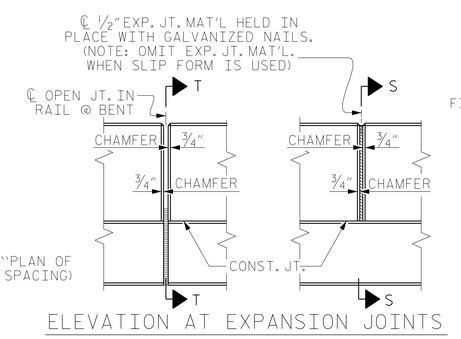

ELEVATION AT EXPANSION JOINTS

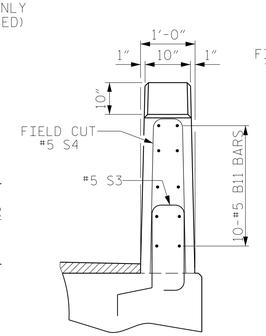

END VIEW

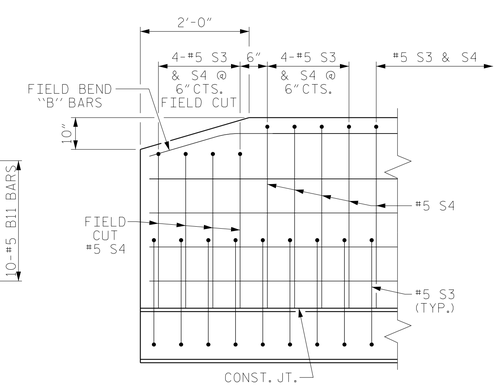

SIDE VIEW

END OF RAIL DETAILS

PROJECT NO. B-5651
SAMPSON COUNTY
STATION: 14+70.00 -L-

SHEET 4 OF 4

STATE OF NORTH CAROLINA
DEPARTMENT OF TRANSPORTATION
RALEIGH

STANDARD
3'-0" X 1'-9"
PRESTRESSED CONCRETE
CORED SLAB UNIT
90° SKEW

NORTH CAROLINA PROFESSIONAL SEAL 039313 ENGINEER JUSTIN MARK ROBINSON
5/16/2019

RS&H
RS&H Architects-Engineers-Planners, Inc.
8521 Six Forks Road, Suite 400
919-926-4100 FAX 919-846-9080
www.rsandh.com
North Carolina License Nos. 50073 · F-0493 · C-28

REVISIONS						SHEET NO.
NO.	BY:	DATE:	NO.	BY:	DATE:	S-8
1			3			TOTAL SHEETS
2			4			17

DOCUMENT NOT CONSIDERED FINAL UNLESS ALL SIGNATURES COMPLETED

ASSEMBLED BY : NSC	DATE : 02/19		
CHECKED BY : MKO	DATE : 02/19		
DRAWN BY : DGE 5/09	REV. 5/18	MAA/THC	
CHECKED BY : BCH 6/09			

5/7/2019
\\rsandh.com\files\Transportation\P\1030036019 Div 3 Sampson 214 B-5651\Design\Structures\CAD\401_015_B5651_SMU_CS_S-8.dgn
CuanyN

STD. NO. 21" PCS3_33_90S

DocuSign Envelope ID: 616F2EEF-EE65-45E5-A032-EE01B0061212

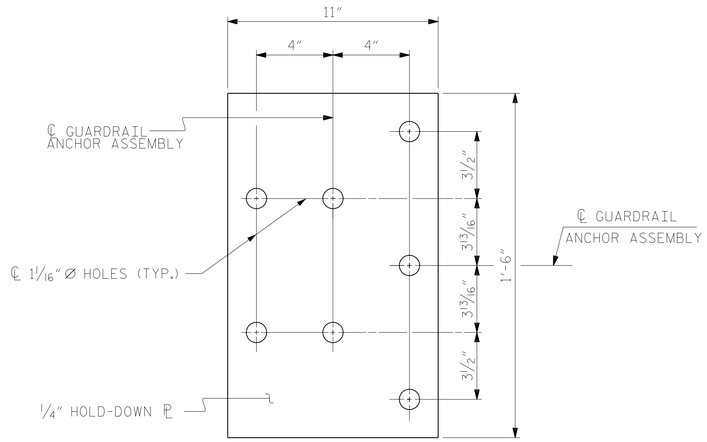

PLAN

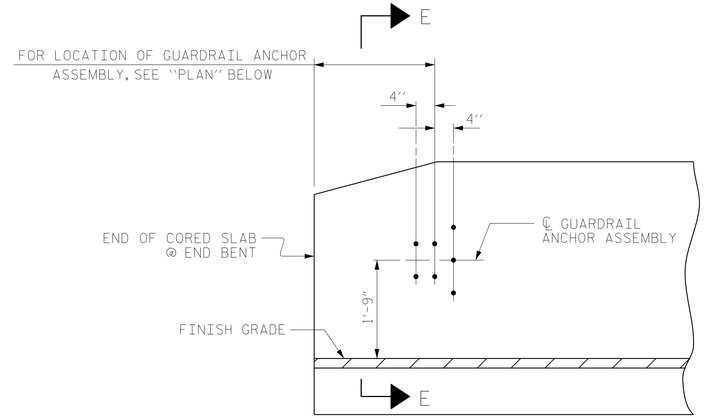

ELEVATION

NOTES

THE GUARDRAIL ANCHOR ASSEMBLY SHALL CONSIST OF A 1/4" HOLD DOWN PLATE AND 7 - 7/8" Ø BOLTS WITH NUTS AND WASHERS.

THE HOLD-DOWN PLATE SHALL CONFORM TO AASHTO M270 GRADE 36. AFTER FABRICATION, THE HOLD-DOWN PLATE SHALL BE HOT-DIP GALVANIZED IN ACCORDANCE WITH AASHTO M111.

BOLTS SHALL CONFORM TO THE REQUIREMENTS OF ASTM A307 AND NUTS SHALL CONFORM TO THE REQUIREMENTS OF AASHTO M291. BOLTS, NUTS AND WASHERS SHALL BE GALVANIZED. (AT THE CONTRACTOR'S OPTION, STAINLESS STEEL BOLTS, NUTS AND WASHERS MAY BE USED AS AN ALTERNATE FOR THE 7/8" Ø GALVANIZED BOLTS, NUTS AND WASHERS. THEY SHALL CONFORM TO OR EXCEED THE MECHANICAL REQUIREMENTS OF ASTM A307. THE USE OF THIS ALTERNATE SHALL BE APPROVED BY THE ENGINEER.)

THE GUARDRAIL ANCHOR ASSEMBLY IS REQUIRED AT ALL POINTS WHERE APPROACH GUARDRAIL IS TO BE ATTACHED TO THE END OF BARRIER RAIL. FOR POINTS OF ATTACHMENT, SEE SKETCH.

AFTER INSTALLATION, THE EXPOSED THREAD OF THE BOLT SHALL BE BURRED WITH A SHARP POINTED TOOL.

THE COST OF THE GUARDRAIL ANCHOR ASSEMBLY SHALL BE INCLUDED IN THE UNIT CONTRACT PRICE BID FOR VERTICAL CONCRETE BARRIER RAIL.

THE VERTICAL REINFORCING BARS MAY BE SHIFTED SLIGHTLY IN THE VERTICAL CONCRETE BARRIER RAIL TO CLEAR ASSEMBLY BOLTS.

THE 1 1/4" Ø HOLES SHALL BE FORMED OR DRILLED WITH A CORE BIT. IMPACT TOOLS WILL NOT BE PERMITTED. ANY CONCRETE DAMAGED BY THIS WORK SHALL BE REPAIRED TO THE SATISFACTION OF THE ENGINEER.

FOR FIBER OPTIC CONDUIT SYSTEM, SEE SPECIAL PROVISIONS.

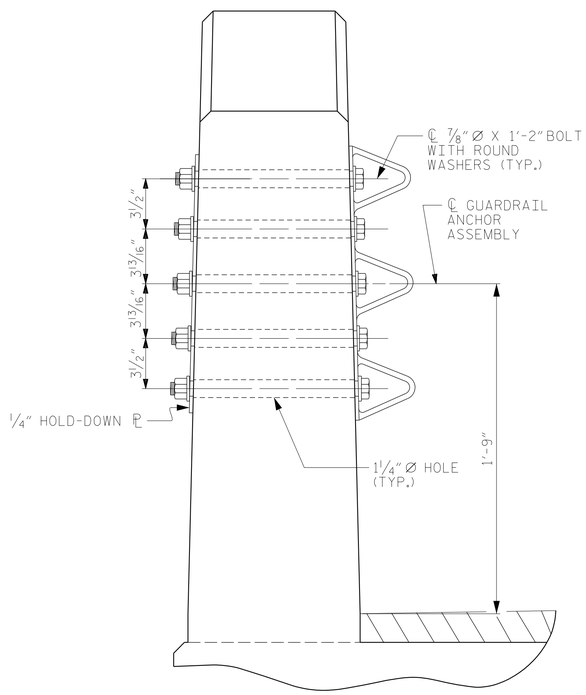

SECTION E-E

GUARDRAIL ANCHOR ASSEMBLY DETAILS

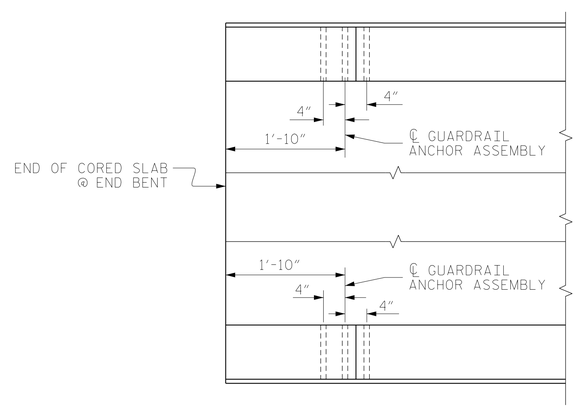

PLAN

LOCATION OF ANCHORS FOR GUARDRAIL

END BENT NO. 1 SHOWN, END BENT NO. 2 SIMILAR.

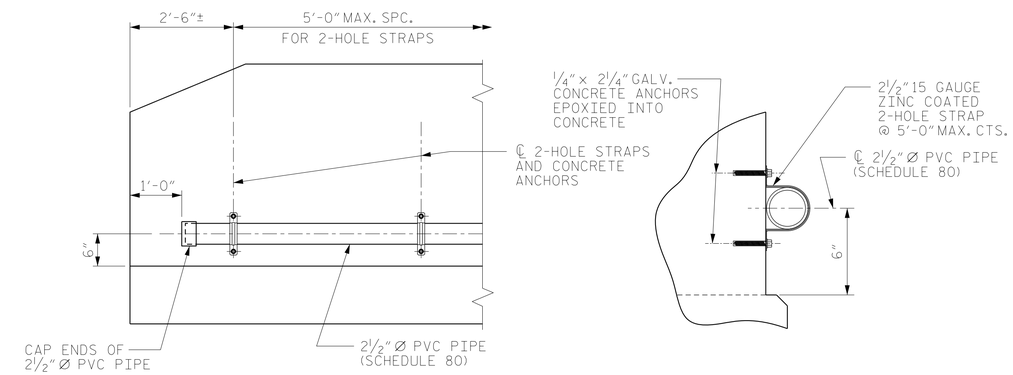

ELEVATION SECTION

FIBER OPTIC CONDUIT SYSTEM DETAILS

2 1/2" Ø SCHEDULE 80 PVC PIPE ATTACHED TO THE BACK OF BOTH RAILS FOR FUTURE FIBER OPTIC CABLE.

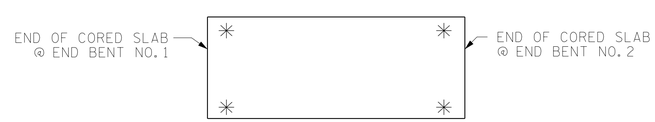

SKETCH SHOWING POINTS OF ATTACHMENT

✳ DENOTES GUARDRAIL ANCHOR ASSEMBLY

PROJECT NO. B-5651

SAMPSON COUNTY

STATION: 14+70.00 -L-

ASSEMBLED BY :	NSC	DATE :	02/19
CHECKED BY :	MKO	DATE :	02/19
DRAWN BY : MAA	5/10	REV. 1/15	MAA/TMG
CHECKED BY : GM	5/10	REV. 12/17	MAA/THC
		REV. 5/18	MAA/THC

DOCUMENT NOT CONSIDERED FINAL UNLESS ALL SIGNATURES COMPLETED

NORTH CAROLINA PROFESSIONAL SEAL ENGINEER 039313 AUSTIN MARK ROBINSON

DocuSigned by: Austin Mark Robinson
5B1B1E2DC0C0B4...

7/17/2019

RS&H

RS&H Architects-Engineers-Planners, Inc.
8521 Six Forks Road, Suite 400
919-926-4100 FAX 919-846-9080
www.rsandh.com
North Carolina License Nos. 50073 * F-0493 * C-28

STATE OF NORTH CAROLINA
DEPARTMENT OF TRANSPORTATION
RALEIGH

STANDARD
GUARDRAIL ANCHORAGE DETAILS
FOR VERTICAL CONCRETE BARRIER RAIL

REVISIONS						SHEET NO.
NO.	BY:	DATE:	NO.	BY:	DATE:	S-9
1			3			TOTAL SHEETS
2			4			17

(SHT 1) STD. NO. GRA3

7/17/2019
\\rsandh.com\files\Transportation\P\1030036019 Div 3 Sampson 214 B-5651\Design\Structures\CAD\401_017_B5651_SMU_VCBR_S-9.dgn
CuanyN

DocuSign Envelope ID: 616F2EEF-EE65-45E5-A032-EE01B0061212

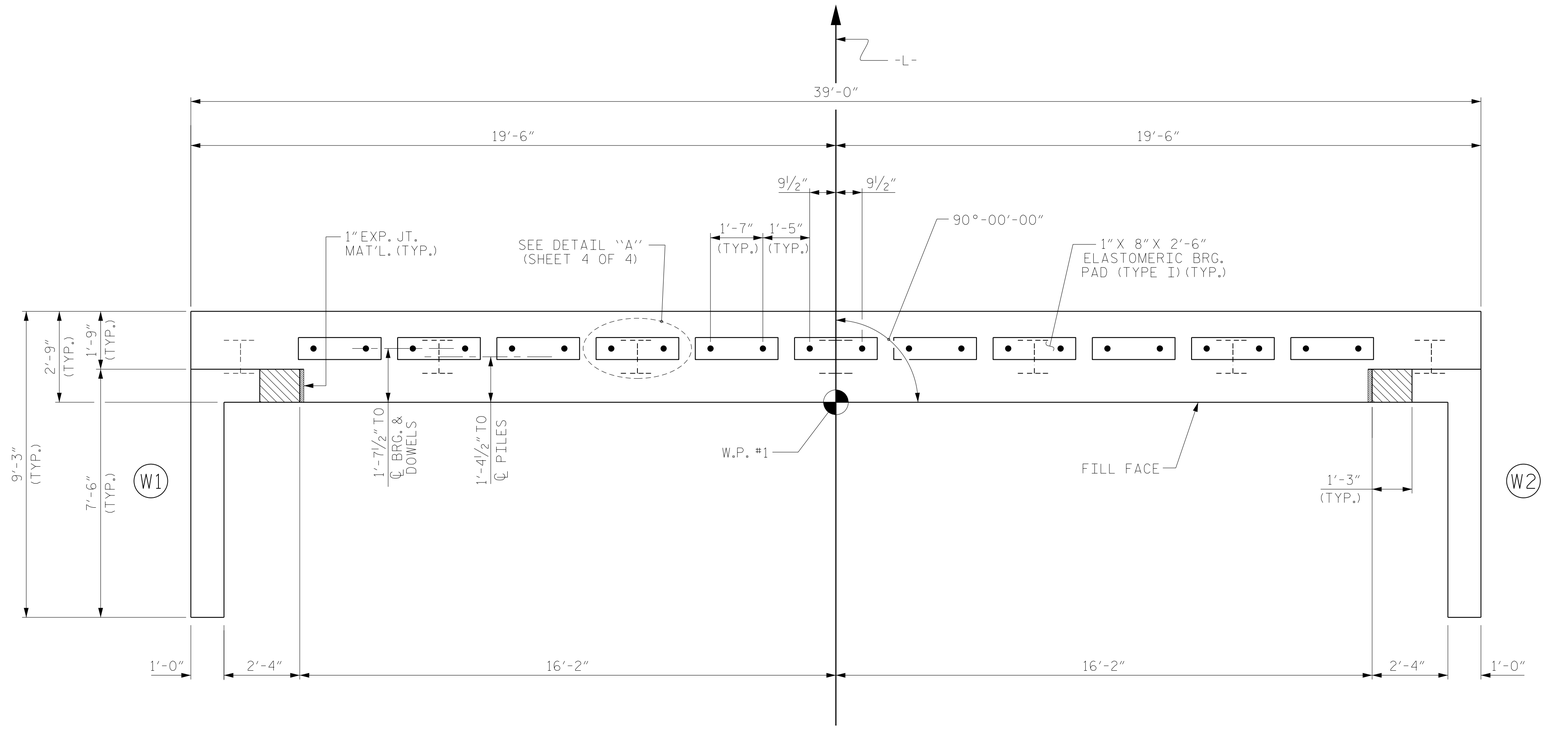

PLAN

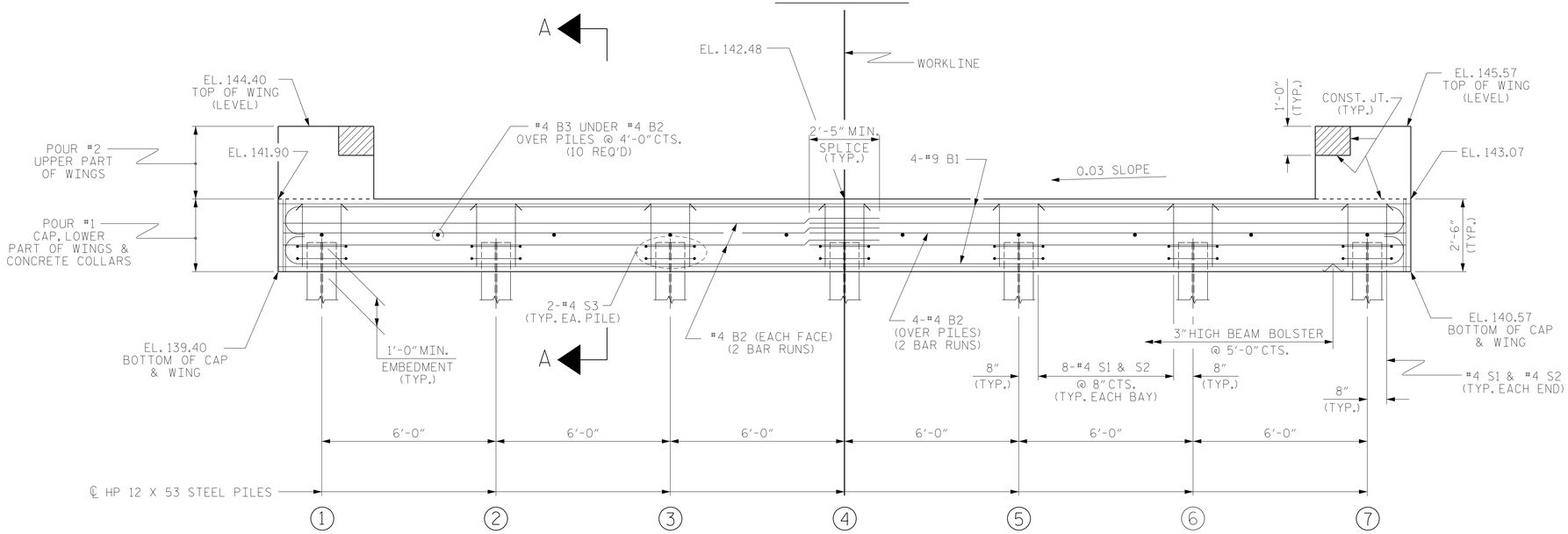

ELEVATION

WINGS NOT SHOWN FOR CLARITY.
FOR SECTION A-A, SEE SHEET 4 OF 4.
CONCRETE COLLARS FOR STEEL PILES NOT SHOWN IN PLAN AND ELEVATION VIEWS FOR CLARITY.
SEE "CORROSION PROTECTION FOR STEEL PILES DETAIL", SHEET 4 OF 4.

NOTES

STIRRUPS IN CAP MAY BE SHIFTED AS NECESSARY TO CLEAR DOWELS.

THE CONCRETE IN THE SHADED AREA OF THE WING SHALL BE POURED AFTER THE VERTICAL CONCRETE BARRIER RAIL IS CAST IF SLIP FORMING IS USED.

FOR PILE SPLICE DETAILS, SEE SHEET 4 OF 4.

FOR WING DETAILS, SEE SHEET 3 OF 4.

TOP OF PILE ELEVATIONS	
1	140.44
2	140.62
3	140.80
4	140.98
5	141.16
6	141.34
7	141.52

PROJECT NO. B-5651
SAMPSON COUNTY
STATION: 14+70.00 -L-

SHEET 1 OF 4

ASSEMBLED BY : NSC	DATE : 02/19		
CHECKED BY : MKO	DATE : 02/19		
DRAWN BY : DGE 01/10	REV. 4/15	MAA/TMG	
CHECKED BY : MKT 01/10			

NORTH CAROLINA PROFESSIONAL SEAL 039313 ENGINEER JUSTIN MARK ROBINSON
5/16/2019

RS&H

RS&H Architects-Engineers-Planners, Inc.
8521 Six Forks Road, Suite 400
919-926-4100 FAX 919-846-9080
www.rsandh.com
North Carolina License Nos. 50073 * F-0493 * C-28

DOCUMENT NOT CONSIDERED FINAL UNLESS ALL SIGNATURES COMPLETED

STATE OF NORTH CAROLINA
DEPARTMENT OF TRANSPORTATION
RALEIGH

SUBSTRUCTURE

END BENT No. 1

REVISIONS						SHEET NO.
NO.	BY:	DATE:	NO.	BY:	DATE:	S-10
1			3			TOTAL SHEETS
2			4			17

5/7/2019
\\rsandh.com\files\Transportation\P\1030036019 Div 3 Sampson 214 B-5651\Design\Structures\CAD\401_019_B5651_SMU_E_S-10.dgn
CuanyN

STD. NO. EB_33_90S

DocuSign Envelope ID: 616F2EEF-EE65-45E5-A032-EE01B0061212

NOTES

STIRRUPS IN CAP MAY BE SHIFTED AS NECESSARY TO CLEAR DOWELS.

THE CONCRETE IN THE SHADED AREA OF THE WING SHALL BE POURED AFTER THE VERTICAL CONCRETE BARRIER RAIL IS CAST IF SLIP FORMING IS USED.

FOR PILE SPLICE DETAILS, SEE SHEET 4 OF 4.

FOR WING DETAILS, SEE SHEET 3 OF 4.

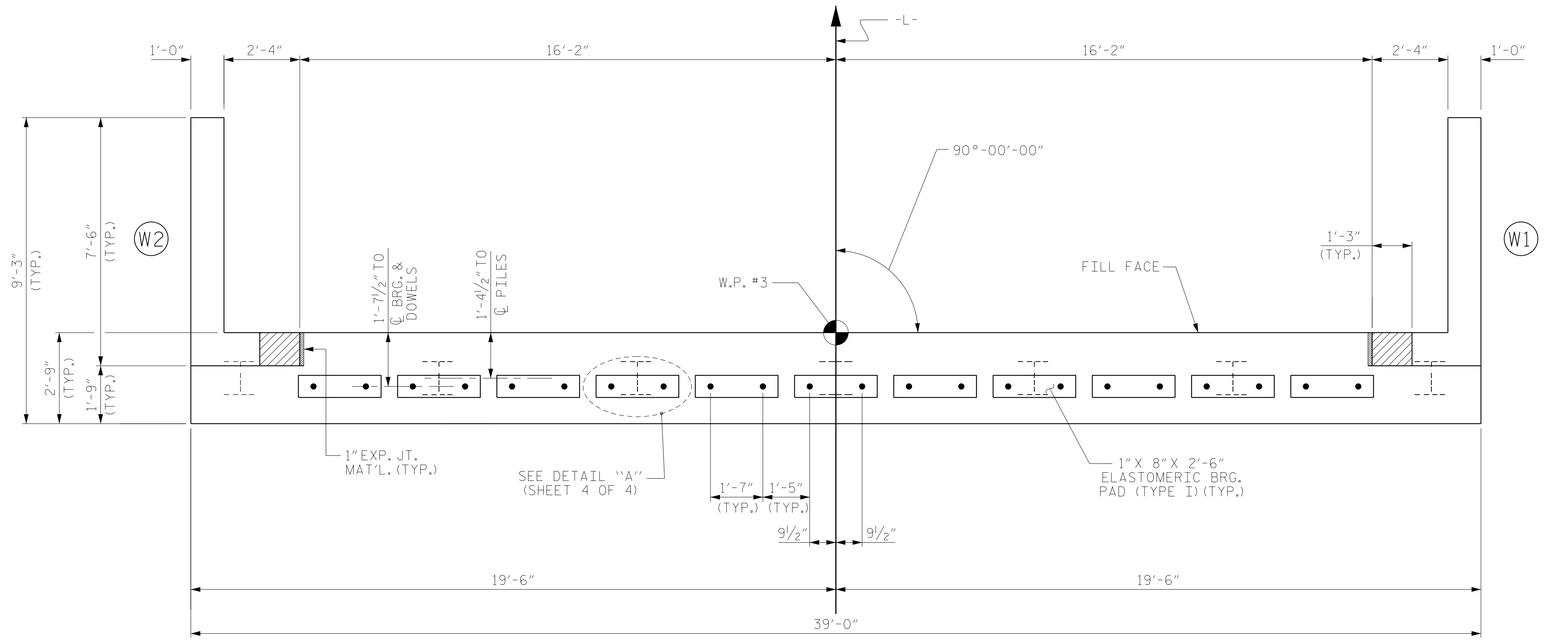

PLAN

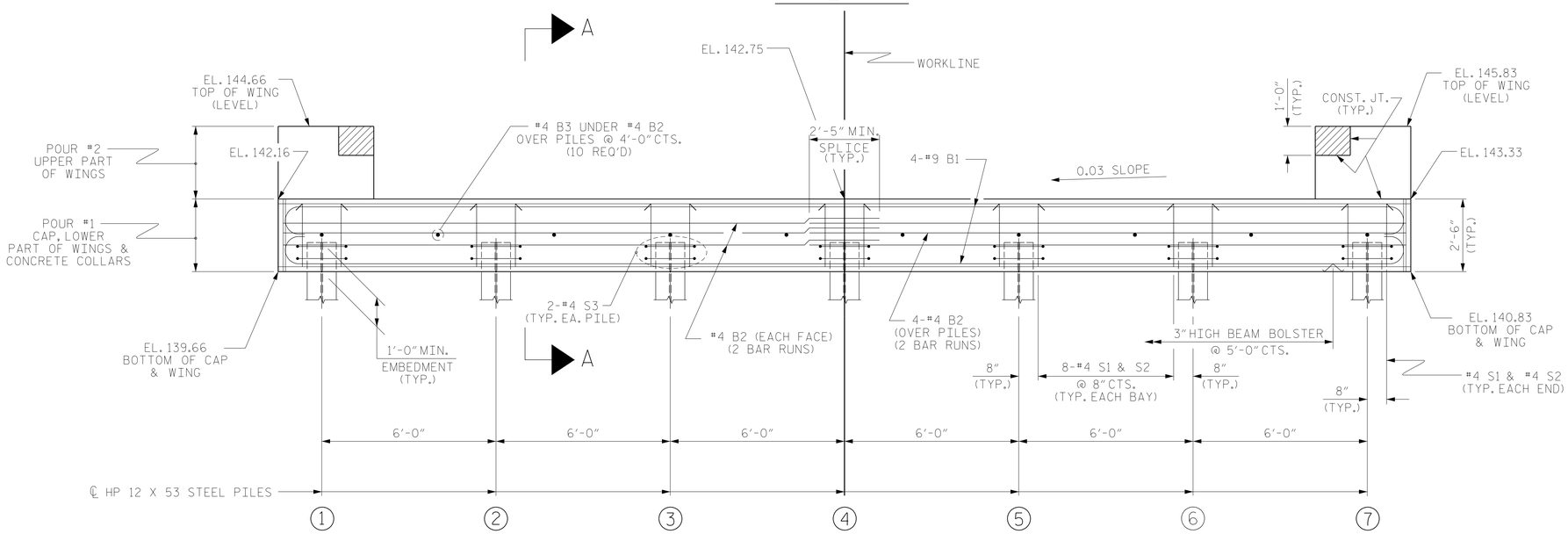

ELEVATION

WINGS NOT SHOWN FOR CLARITY.
FOR SECTION A-A, SEE SHEET 4 OF 4.
CONCRETE COLLARS FOR STEEL PILES NOT SHOWN IN PLAN AND ELEVATION VIEWS FOR CLARITY.
SEE "CORROSION PROTECTION FOR STEEL PILES DETAIL", SHEET 4 OF 4.

TOP OF PILE ELEVATIONS	
1	140.71
2	140.89
3	141.07
4	141.25
5	141.43
6	141.61
7	141.79

PROJECT NO. B-5651
SAMPSON COUNTY
STATION: 14+70.00 -L-

SHEET 2 OF 4

ASSEMBLED BY : NSC	DATE : 02/19		
CHECKED BY : MKO	DATE : 02/19		
DRAWN BY : DGE 01/10	REV. 4/15	MAA/TMG	
CHECKED BY : MKT 01/10			

NORTH CAROLINA PROFESSIONAL SEAL 039313 ENGINEER JUSTIN MARK ROBINSON
5/16/2019

RS&H
RS&H Architects-Engineers-Planners, Inc.
8521 Six Forks Road, Suite 400
919-926-4100 FAX 919-846-9080
www.rsandh.com
North Carolina License Nos. 50073 * F-0493 * C-28

DOCUMENT NOT CONSIDERED FINAL UNLESS ALL SIGNATURES COMPLETED

STATE OF NORTH CAROLINA
DEPARTMENT OF TRANSPORTATION
RALEIGH

SUBSTRUCTURE
END BENT No. 2

REVISIONS						SHEET NO.
NO.	BY:	DATE:	NO.	BY:	DATE:	S-11
1			3			TOTAL SHEETS
2			4			17

5/7/2019
\\rsandh.com\files\Transportation\P\1030036019 Div 3 Sampson 214 B-5651\Design\Structures\CAD\401_021_B5651_SMU_E_S-11.dgn
CuanyN

STD. NO. EB_33_90S

DocuSign Envelope ID: 616F2EEF-EE65-45E5-A032-EE01B0061212

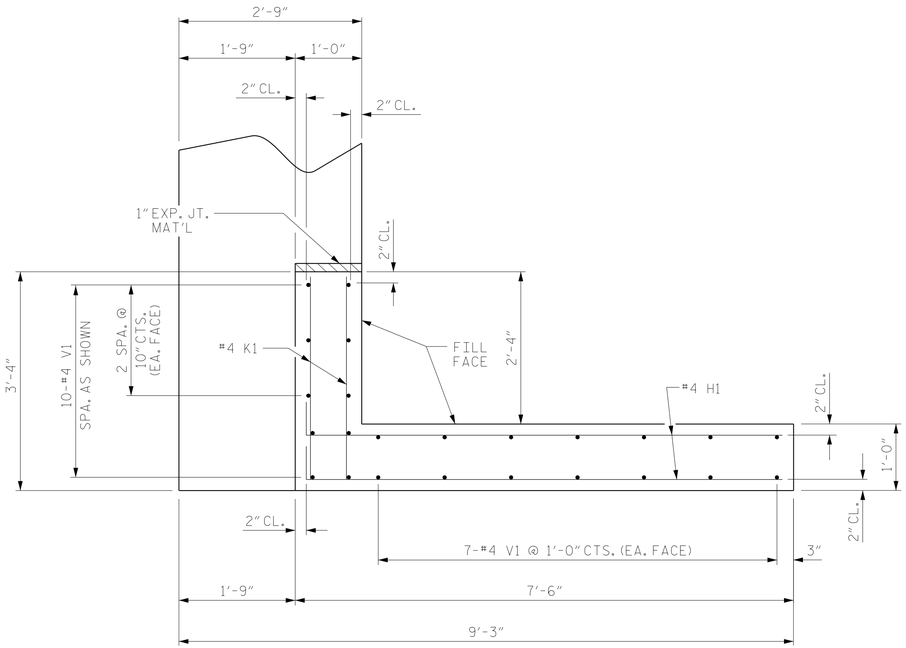

PLAN OF WING (W1)

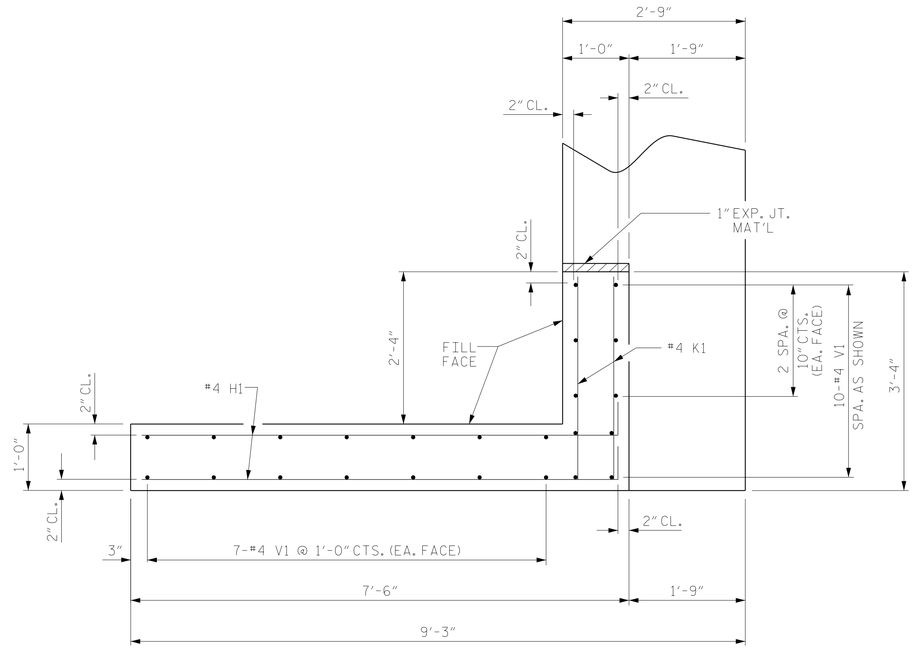

PLAN OF WING (W2)

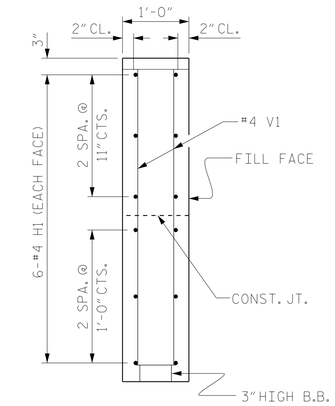

SECTION X-X

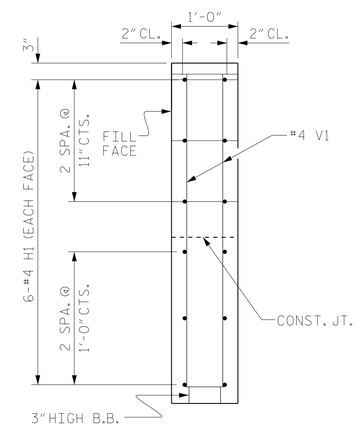

SECTION Y-Y

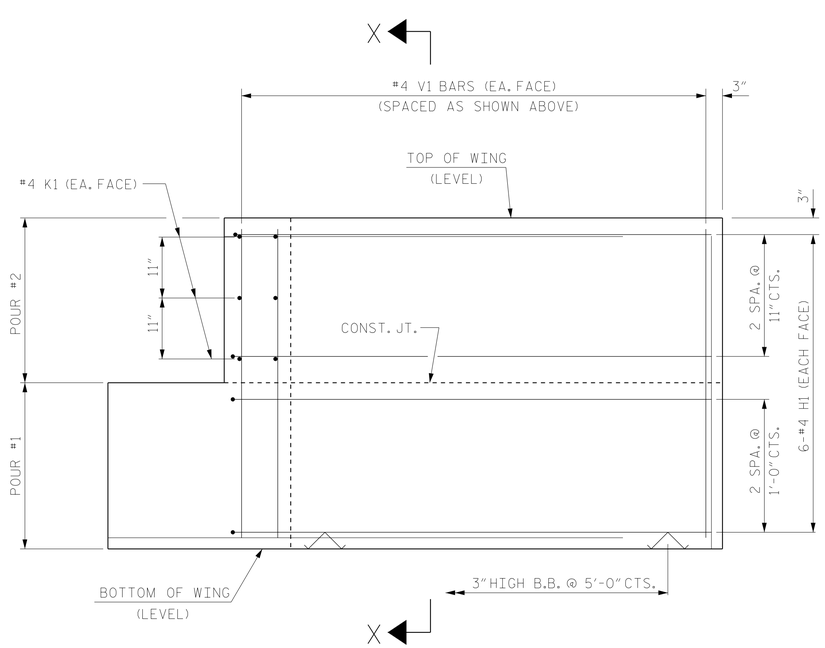

ELEVATION OF WING (W1)

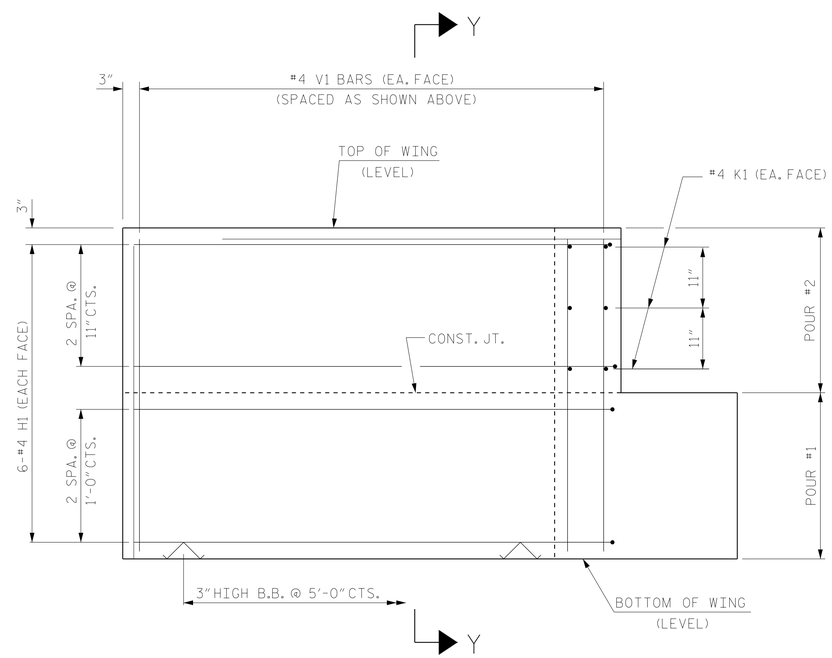

ELEVATION OF WING (W2)

WING DETAILS

PROJECT NO. B-5651

SAMPSON COUNTY

STATION: 14+70.00 -L-

SHEET 3 OF 4

STATE OF NORTH CAROLINA
DEPARTMENT OF TRANSPORTATION
RALEIGH

SUBSTRUCTURE

END BENT
WING DETAILS

NORTH CAROLINA PROFESSIONAL SEAL 039313 ENGINEER JUSTIN MARK ROBINSON
5/16/2019

RS&H

RS&H Architects-Engineers-Planners, Inc.
8521 Six Forks Road, Suite 400
919-926-4100 FAX 919-846-9080
www.rsandh.com
North Carolina License Nos. 50073 * F-0493 * C-28

REVISIONS						SHEET NO.
NO.	BY:	DATE:	NO.	BY:	DATE:	S-12
1			3			TOTAL SHEETS
2			4			17

ASSEMBLED BY :	NSC	DATE :	02/19
CHECKED BY :	MKO	DATE :	02/19
DRAWN BY : DGE	02/10	REV. 4/15	MAA/TMG
CHECKED BY : MKT	02/10		

DOCUMENT NOT CONSIDERED FINAL UNLESS ALL SIGNATURES COMPLETED

5/7/2019
\\rsandh.com\files\Transportation\P\1030036019 Div 3 Sampson 214 B-5651\Design\Structures\CAD\401_023_B5651_SMU_E_S-12.dgn
CuanyN

STD. NO. EB_33_90S

DocuSign Envelope ID: 616F2EEF-EE65-45E5-A032-EE01B0061212

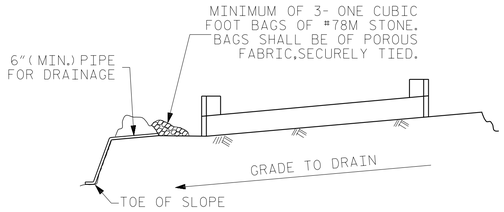

BAGGED STONE AND PIPE SHALL BE PLACED IMMEDIATELY AFTER COMPLETION OF END BENT EXCAVATION. PIPE MAY BE EITHER CONCRETE, CORRUGATED STEEL, CORRUGATED ALUMINUM ALLOY, OR CORRUGATED PLASTIC. PERFORATED PIPE WILL NOT BE ALLOWED.

BAGGED STONE SHALL REMAIN IN PLACE UNTIL THE ENGINEER DIRECTS THAT IT BE REMOVED. THE CONTRACTOR SHALL REMOVE AND DISPOSE OF SILT ACCUMULATIONS AT BAGGED STONE WHEN SO DIRECTED BY THE ENGINEER. BAGS SHALL BE REMOVED AND REPLACED WHENEVER THE ENGINEER DETERMINES THAT THEY HAVE DETERIORATED AND LOST THEIR EFFECTIVENESS.

NO SEPARATE PAYMENT WILL BE MADE FOR THIS WORK AND THE ENTIRE COST OF THIS WORK SHALL BE INCLUDED IN THE UNIT CONTRACT PRICE BID FOR THE SEVERAL PAY ITEMS.

TEMPORARY DRAINAGE AT END BENT

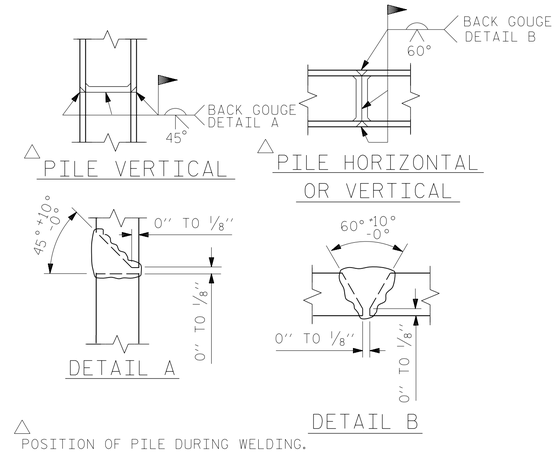

PILE SPLICE DETAILS

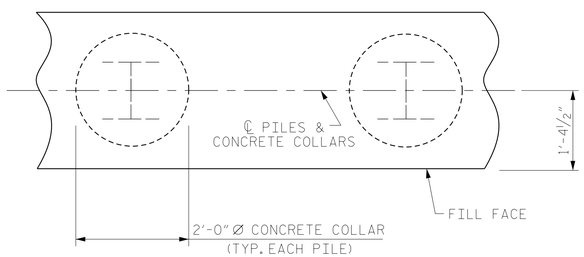

PLAN

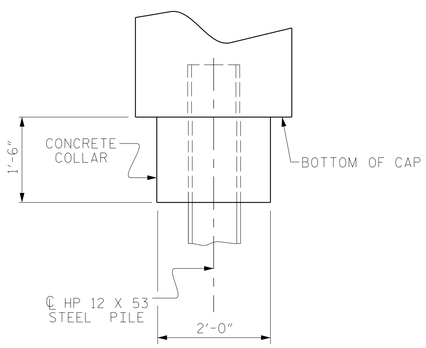

ELEVATION

CORROSION PROTECTION FOR STEEL PILES DETAIL

(END BENT No. 1 SHOWN, END BENT No. 2 SIMILAR BY ROTATION)

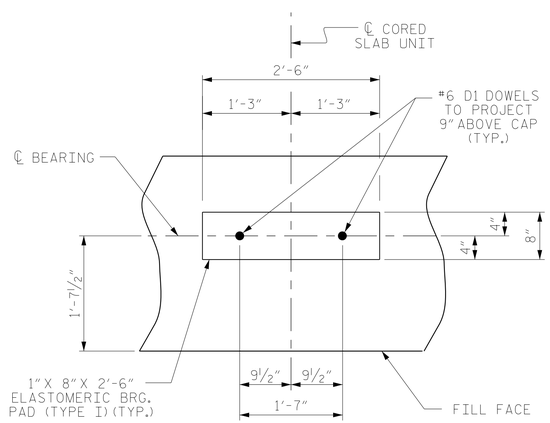

DETAIL "A"

(END BENT No. 1 SHOWN, END BENT No. 2 SIMILAR BY ROTATION)

BAR TYPES

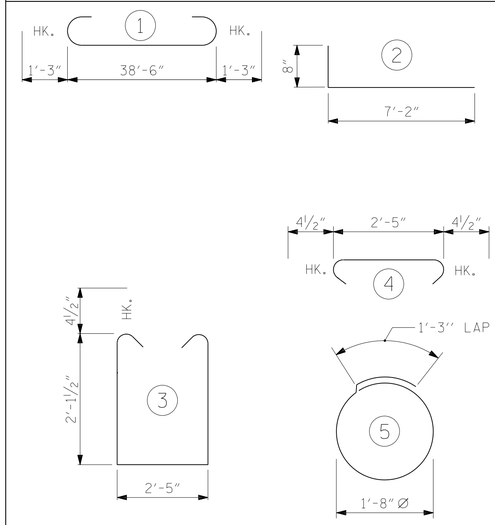

ALL BAR DIMENSIONS ARE OUT TO OUT.

END BENT No. 1	END BENT No. 2
HP 12 X 53 STEEL PILES NO: 7 LIN. FT.= 385	HP 12 X 53 STEEL PILES NO: 7 LIN. FT.= 420
PILE DRIVING EQUIPMENT SETUP FOR HP 12 X 53 STEEL PILES NO: 7	PILE DRIVING EQUIPMENT SETUP FOR HP 12 X 53 STEEL PILES NO: 7
PILE REDRIVES NO: 3	PILE REDRIVES NO: 3

BILL OF MATERIAL FOR ONE END BENT

BAR	NO.	SIZE	TYPE	LENGTH	WEIGHT
B1	8	#9	1	41'-0"	1115
B2	16	#4	STR	20'-7"	220
B3	10	#4	STR	2'-5"	16
D1	22	#6	STR	1'-6"	50
H1	24	#4	2	7'-10"	126
K1	12	#4	STR	2'-11"	23
S1	50	#4	3	7'-5"	248
S2	50	#4	4	3'-2"	106
S3	14	#4	5	6'-6"	61
V1	48	#4	STR	4'-8"	150

REINFORCING STEEL (FOR ONE END BENT) 2115 LBS.

CLASS A CONCRETE BREAKDOWN (FOR ONE END BENT)

POUR #1 CAP, LOWER PART OF WINGS & COLLARS 12.4 C.Y.

POUR #2 UPPER PART OF WINGS 1.8 C.Y.

TOTAL CLASS A CONCRETE 14.2 C.Y.

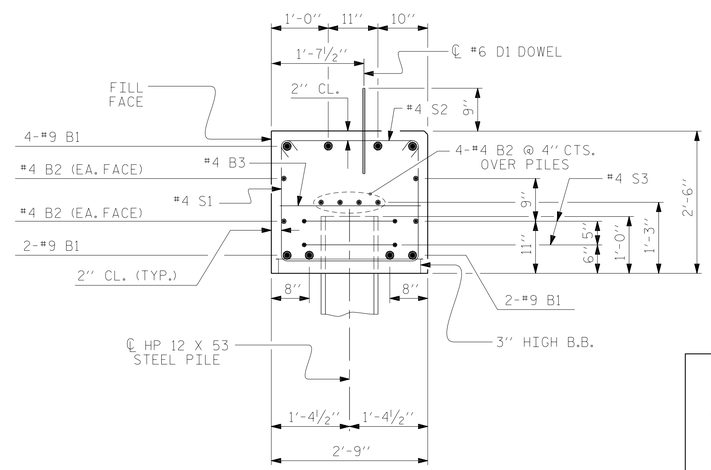

SECTION A-A

(CONCRETE COLLAR NOT SHOWN FOR CLARITY. SEE "CORROSION PROTECTION FOR STEEL PILES DETAIL.")

PROJECT NO. B-5651
SAMPSON COUNTY
STATION: 14+70.00 -L-

SHEET 4 OF 4

STATE OF NORTH CAROLINA
DEPARTMENT OF TRANSPORTATION
RALEIGH

SUBSTRUCTURE

END BENT No. 1 & 2 DETAILS

NORTH CAROLINA PROFESSIONAL ENGINEER SEAL 039313 JUSTIN MARK ROBINSON
5/16/2019

RS&H
RS&H Architects-Engineers-Planners, Inc.
8521 Six Forks Road, Suite 400
919-926-4100 FAX 919-846-9080
www.rsandh.com
North Carolina License Nos. 50073 * F-0493 * C-28

DOCUMENT NOT CONSIDERED FINAL UNLESS ALL SIGNATURES COMPLETED

REVISIONS								SHEET NO.
NO.	BY:	DATE:	NO.	BY:	DATE:			S-13
1			3					TOTAL SHEETS
2			4					17

ASSEMBLED BY : NSC		DATE : 02/19	
CHECKED BY : MKO		DATE : 02/19	
DRAWN BY : DGE	12/09	REV. 4/17	MAA/THC
CHECKED BY : MKT	01/10		

5/7/2019
\\rsandh.com\files\Transportation\P\1030036019 Div 3 Sampson 214 B-5651\Design\Structures\CAD\401_025_B5651_SMU_E_S-13.dgn
CuanyN

STD. NO. EB_33_90S

DocuSign Envelope ID: 616F2EEF-EE65-45E5-A032-EE01B0061212

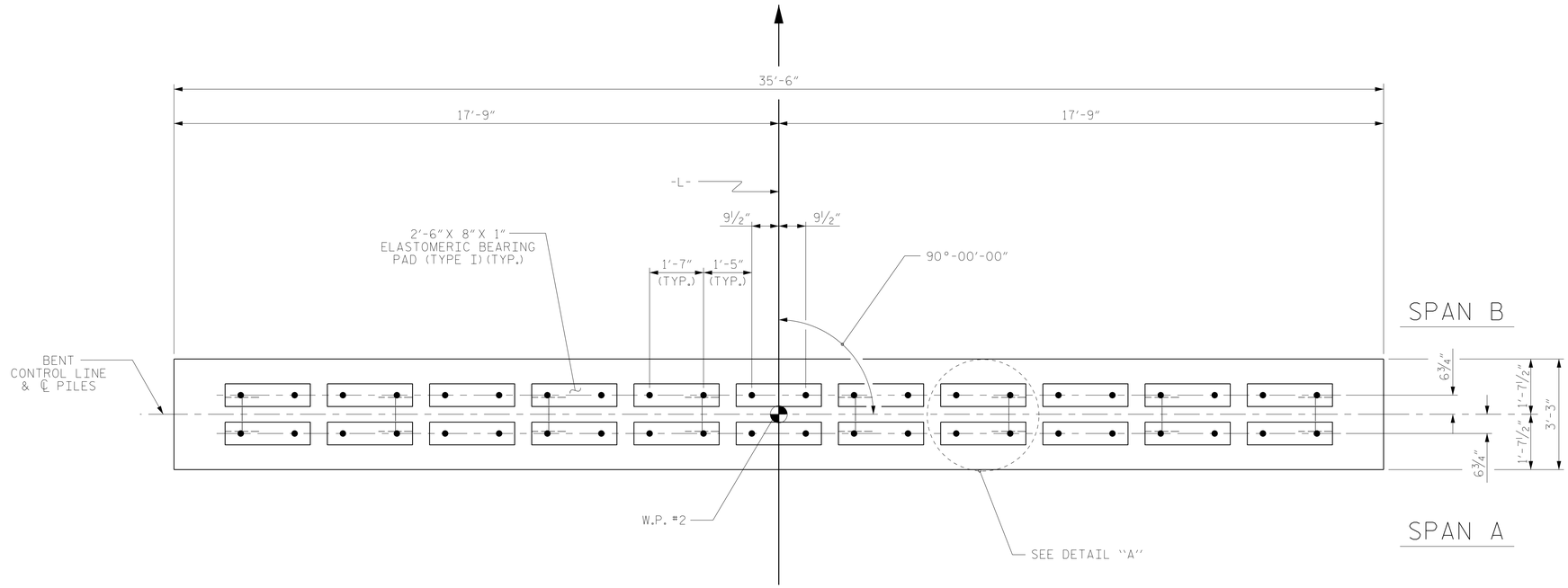

PLAN

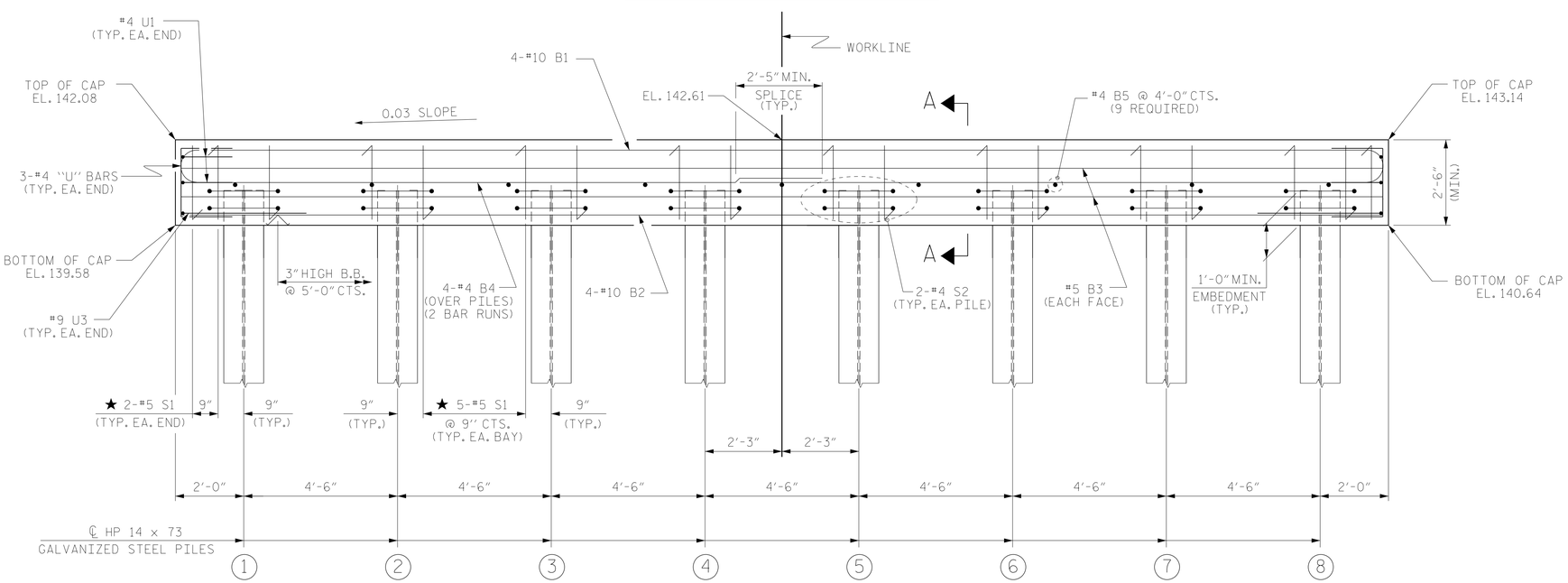

ELEVATION

FOR SECTION A-A, SEE SHEET 2 OF 2

NOTES

STIRRUPS IN CAP MAY BE SHIFTED AS NECESSARY TO CLEAR DOWELS.

★ INVERT ALTERNATE STIRRUPS.

GALVANIZE THE TOP OF EACH INTERIOR BENT PILE A MINIMUM OF 35 FEET. GALVANIZE IN ACCORDANCE WITH SECTION 1076 OF THE STANDARD SPECIFICATIONS.

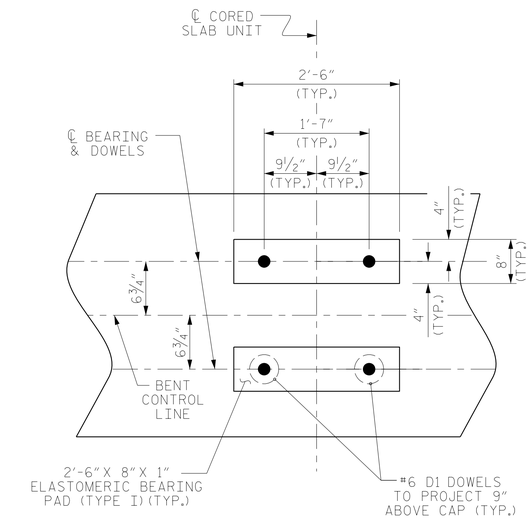

DETAIL "A"

(DIMENSIONS ARE TYPICAL EACH BEARING)

TOP OF PILE ELEVATIONS	
1	140.64
2	140.77
3	140.91
4	141.04
5	141.18
6	141.31
7	141.45
8	141.58

PROJECT NO. B-5651

SAMPSON COUNTY

STATION: 14+70.00 -L-

SHEET 1 OF 2

NORTH CAROLINA PROFESSIONAL SEAL 039313 ENGINEER JUSTIN MARK ROBINSON

5/16/2019

RS&H

RS&H Architects-Engineers-Planners, Inc.
8521 Six Forks Road, Suite 400
919-926-4100 FAX 919-846-9080
www.rsandh.com
North Carolina License Nos. 50073 * F-0493 * C-28

STATE OF NORTH CAROLINA
DEPARTMENT OF TRANSPORTATION
RALEIGH

SUBSTRUCTURE

BENT No. 1

REVISIONS						SHEET NO.
NO.	BY:	DATE:	NO.	BY:	DATE:	S-14
1			3			TOTAL SHEETS
2			4			17

DOCUMENT NOT CONSIDERED FINAL UNLESS ALL SIGNATURES COMPLETED

ASSEMBLED BY :	NSC	DATE :	02/19
CHECKED BY :	MKO	DATE :	02/19
DRAWN BY : DGE 05/10	REV. 6/17	MAA/THC	
CHECKED BY : MKT 05/10			

5/7/2019
\\rsandh.com\files\Transportation\P\1030036019 Div 3 Sampson 214 B-5651\Design\Structures\CAD\401_027_B5651_SMU_B_S-14.dgn
CuanyN

STD. NO. 14" HP_BT_33_90S_<60'

DocuSign Envelope ID: 616F2EEF-EE65-45E5-A032-EE01B0061212

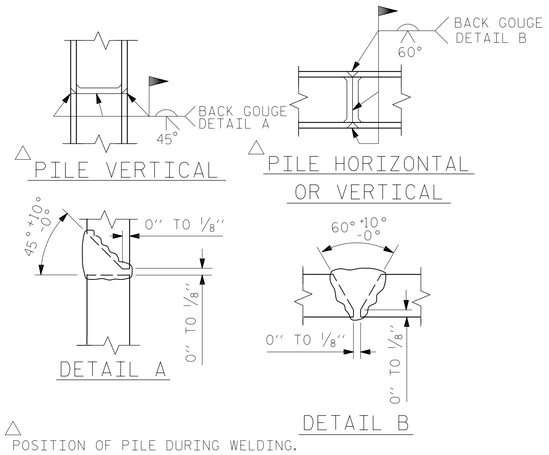

PILE SPLICE DETAILS

BAR TYPES

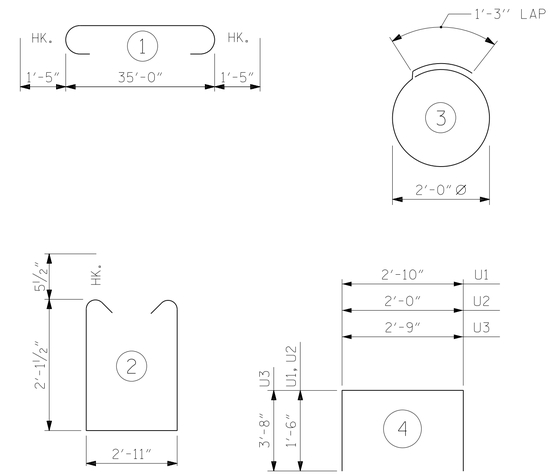

ALL BAR DIMENSIONS ARE OUT TO OUT.

BILL OF MATERIAL
FOR ONE BENT

BAR	NO.	SIZE	TYPE	LENGTH	WEIGHT
B1	4	#10	1	37'-10"	651
B2	4	#10	STR	35'-2"	605
B3	4	#5	STR	35'-2"	147
B4	8	#4	STR	18'-10"	101
B5	9	#4	STR	2'-11"	18
D1	44	#6	STR	1'-6"	99
S1	39	#5	2	8'-1"	329
S2	16	#4	3	7'-7"	81
U1	4	#4	4	5'-10"	16
U2		#4	4	5'-0"	
U3	2	#9	4	10'-1"	69

REINFORCING STEEL (FOR ONE BENT) 2136 LBS

CLASS A CONCRETE BREAKDOWN (FOR ONE BENT)

TOTAL CLASS A CONCRETE 10.7 C.Y.

HP 14 X 73 GALVANIZED STEEL PILES (FOR ONE BENT)

No. 8 LIN. FT. 600

PILE DRIVING EQUIPMENT SETUP FOR HP 14 X 73 GALVANIZED STEEL PILES (FOR ONE BENT) NO: 8

PILE REDRIVES NO: 4

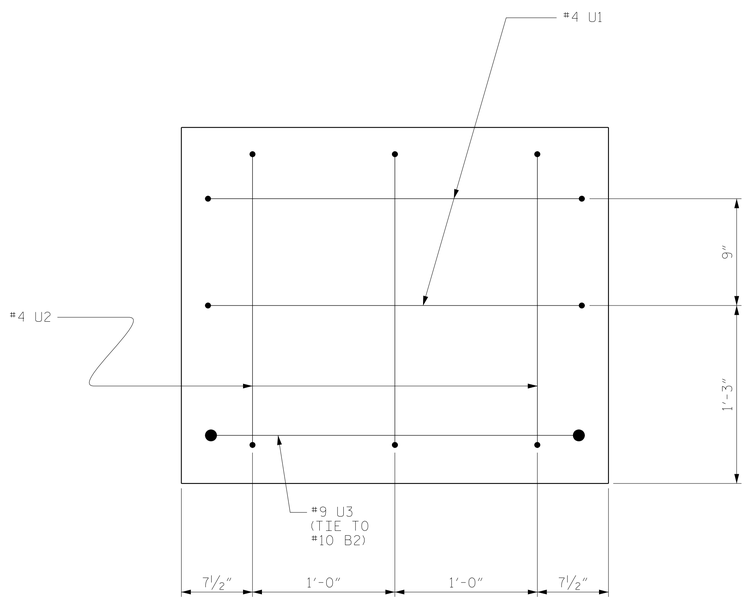

END OF CAP VIEW
(TYPICAL BOTH ENDS)

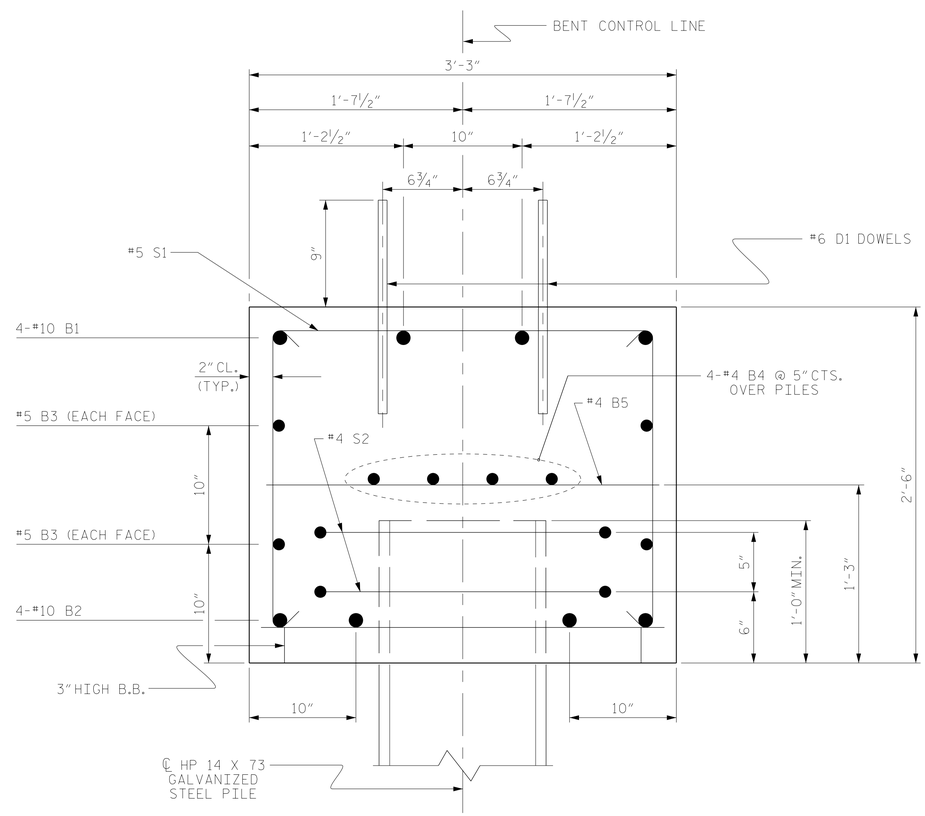

SECTION A-A

PROJECT NO. B-5651

SAMPSON COUNTY

STATION: 14+70.00 -L-

SHEET 2 OF 2

STATE OF NORTH CAROLINA
DEPARTMENT OF TRANSPORTATION
RALEIGH

SUBSTRUCTURE

BENT No. 1

NORTH CAROLINA PROFESSIONAL ENGINEER SEAL 039313 JUSTIN MARK ROBINSON
5/16/2019

RS&H Architects-Engineers-Planners, Inc.
8521 Six Forks Road, Suite 400
919-926-4100 FAX 919-846-9080
www.rsandh.com
North Carolina License Nos. 50073 * F-0493 * C-28

REVISIONS						SHEET NO.
NO.	BY:	DATE:	NO.	BY:	DATE:	S-15
1			3			TOTAL SHEETS
2			4			17

DOCUMENT NOT CONSIDERED FINAL UNLESS ALL SIGNATURES COMPLETED

ASSEMBLED BY :	NSC	DATE :	02/19
CHECKED BY :	MKO	DATE :	02/19
DRAWN BY : DGE 05/10	REV. 6/17	MAA/THC	
CHECKED BY : MKT 05/10			

5/7/2019
\\rsandh.com\files\Transportation\P\1030036019 Div 3 Sampson 214 B-5651\Design\Structures\CAD\401_029_B5651_SMU_B_S-15.dgn
CuanyN

STD. NO. 14" HP_BT_33_90S_<60'

DocuSign Envelope ID: 616F2EEF-EE65-45E5-A032-EE01B0061212

NOTES :

FOR BERM WIDTH DIMENSIONS, SEE GENERAL DRAWING.

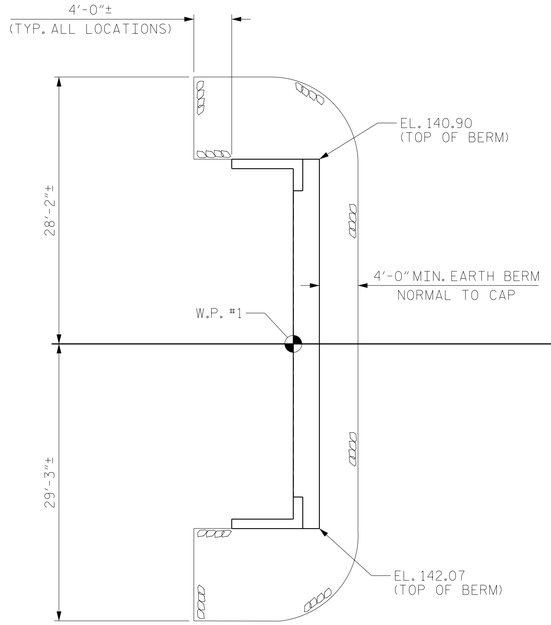

PLAN @ END BENT NO. 1

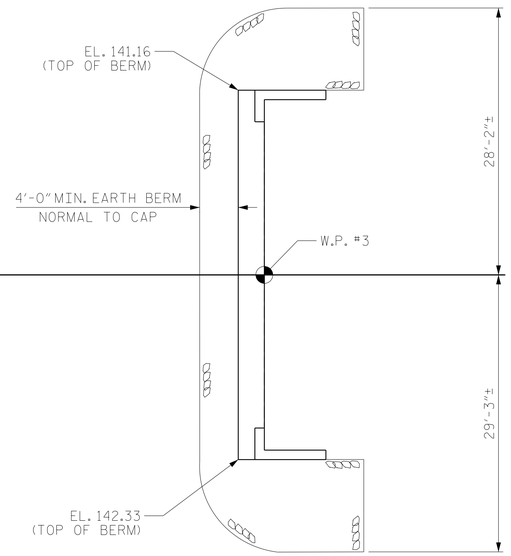

PLAN @ END BENT NO. 2

PLAN OF RIP RAP

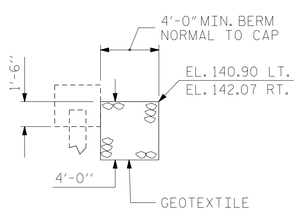

℄ SECTION @ END BENT NO. 1

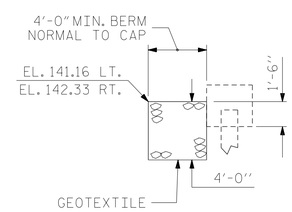

℄ SECTION @ END BENT NO. 2

ESTIMATED QUANTITIES		
BRIDGE @ STA. 14+70.00 -L-	RIP RAP CLASS II	GEOTEXTILE FOR DRAINAGE
	TONS	SQUARE YARDS
END BENT NO. 1	95	50
END BENT NO. 2	95	50

PROJECT NO. B-5651

SAMPSON COUNTY

STATION: 14+70.00 -L-

NORTH CAROLINA PROFESSIONAL SEAL 039313 ENGINEER JUSTIN MARK ROBINSON

5/16/2019

RS&H

RS&H Architects-Engineers-Planners, Inc.
8521 Six Forks Road, Suite 400
919-926-4100 FAX 919-846-9080
www.rsandh.com
North Carolina License Nos. 50073 * F-0493 * C-28

STATE OF NORTH CAROLINA
DEPARTMENT OF TRANSPORTATION
RALEIGH

RIP RAP DETAILS

REVISIONS						SHEET NO.
NO.	BY:	DATE:	NO.	BY:	DATE:	S-16
1			3			TOTAL SHEETS
2			4			17

DOCUMENT NOT CONSIDERED FINAL UNLESS ALL SIGNATURES COMPLETED

DRAWN BY :	NSC	DATE :	02/2019
CHECKED BY :	MKO	DATE :	02/2019
DESIGN ENGINEER OF RECORD:	JMR	DATE :	02/2019

5/7/2019
\\rsandh.com\files\Transportation\P\1030036019 Div 3 Sampson 214 B-5651\Design\Structures\CAD\401_031_B5651_SMU_RR_S-16.dgn
CuanyN

DocuSign Envelope ID: 616F2EEF-EE65-45E5-A032-EE01B0061212

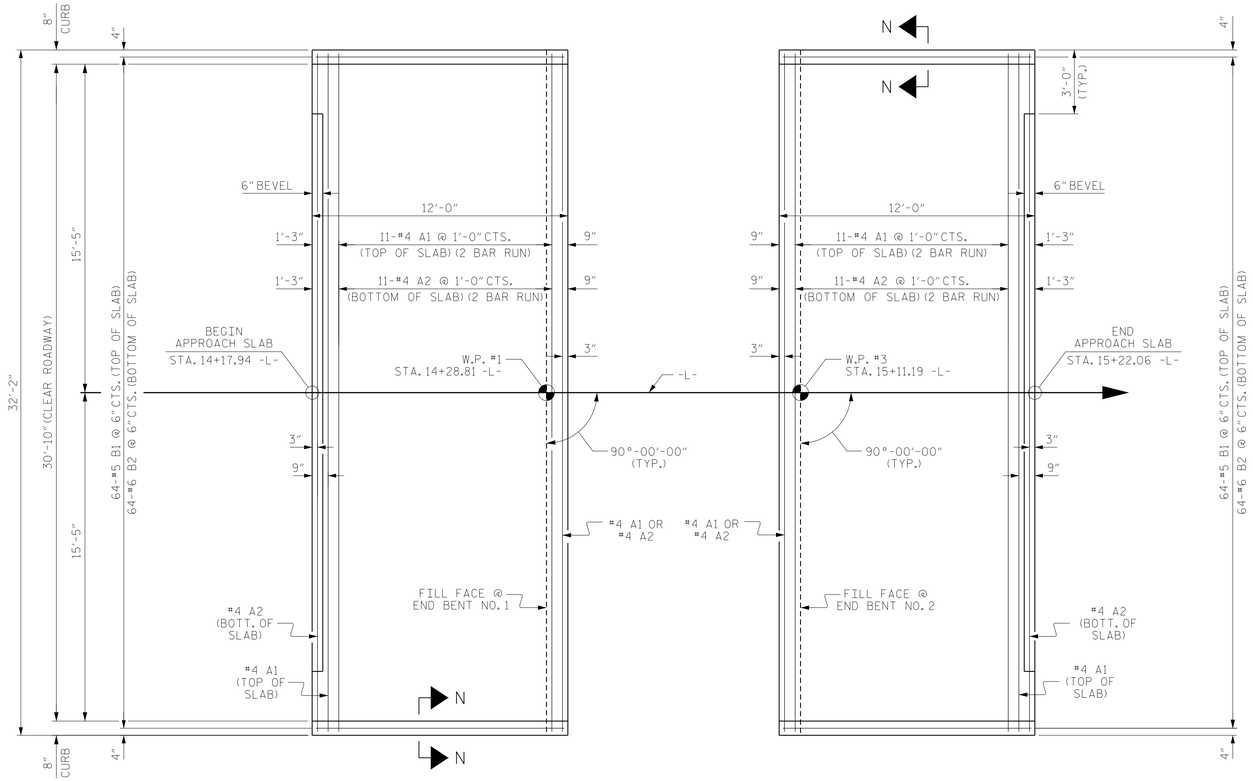

PLAN @ END BENT NO. 1

PLAN @ END BENT NO. 2

DIMENSIONS SHOWN ARE TYPICAL FOR BOTH APPROACH SLABS

NOTES

FOR BRIDGE APPROACH FILL INCLUDING GEOTEXTILE, 4" Ø DRAINAGE PIPE, AND SELECT MATERIAL BACKFILL, SEE ROADWAY PLANS.

GEOTEXTILE SHALL BE TYPE 1 IN ACCORDANCE WITH THE STANDARD SPECIFICATIONS SECTION 1056.

SELECT MATERIAL BACKFILL (CLASS V OR CLASS VI) SHALL BE IN ACCORDANCE WITH STANDARD SPECIFICATIONS SECTION 1016.

SELECT MATERIAL BACKFILL IS TO BE CONTINUOUS ALONG FILL FACE OF BACKWALL FROM OUTSIDE EDGE TO OUTSIDE EDGE OF APPROACH SLAB.

FOR THE 4" Ø DRAINAGE PIPE OUTLET(S), SEE ROADWAY STANDARD DRAWINGS.

AREA BETWEEN THE WINGWALL AND APPROACH SLAB SHALL BE GRADED TO DRAIN THE WATER AWAY FROM THE FILL FACE OF THE BRIDGE AND SHALL BE PAVED. SEE ROADWAY PLANS.

APPROACH SLAB GROOVING IS NOT REQUIRED.

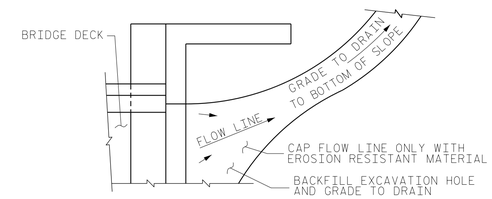

NOTE: IF THE APPROACH SLAB IS NOT CONSTRUCTED IMMEDIATELY AFTER THE BACKFILLING OF THE END BENT EXCAVATION, GRADE TO DRAIN TO THE BOTTOM OF THE SLOPE AND PROVIDE EROSION RESISTANT MATERIAL, SUCH AS FIBERGLASS ROVING OR AS DIRECTED BY THE ENGINEER TO PREVENT SOIL EROSION AND TO PROTECT THE AREA ADJACENT TO THE STRUCTURE. THE CONTRACTOR WILL BE REQUIRED TO REMOVE THESE MATERIALS PRIOR TO CONSTRUCTION OF THE APPROACH SLAB.

TEMPORARY DRAINAGE DETAIL

BILL OF MATERIAL

APPROACH SLAB AT EB NO. 1					
BAR	NO.	SIZE	TYPE	LENGTH	WEIGHT
* A1	26	#4	STR	16'-11"	294
A2	26	#4	STR	16'-9"	291
* B1	64	#5	STR	11'-2"	745
B2	64	#6	STR	11'-8"	1121
REINFORCING STEEL				LBS.	1412
* EPOXY COATED REINFORCING STEEL				LBS.	1039
CLASS AA CONCRETE				C. Y.	18.4

APPROACH SLAB AT EB NO. 2					
BAR	NO.	SIZE	TYPE	LENGTH	WEIGHT
* A1	26	#4	STR	16'-11"	294
A2	26	#4	STR	16'-9"	291
* B1	64	#5	STR	11'-2"	745
B2	64	#6	STR	11'-8"	1121
REINFORCING STEEL				LBS.	1412
* EPOXY COATED REINFORCING STEEL				LBS.	1039
CLASS AA CONCRETE				C. Y.	18.4

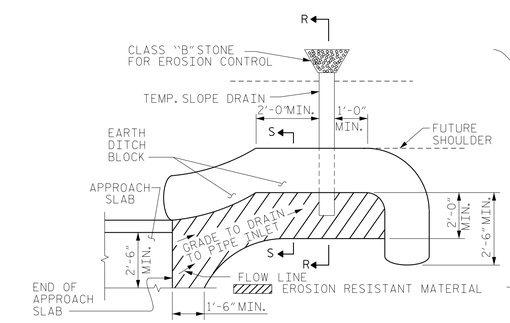

NOTE: IMMEDIATELY AFTER THE CONSTRUCTION OF THE APPROACH SLAB, THE CONTRACTOR SHALL PROVIDE TEMPORARY BERM AND SLOPE DRAIN. CONTRACTOR SHALL GRADE TO PIPE INLET AND PROVIDE EROSION RESISTANT MATERIAL AS SHOWN. THE EROSION RESISTANT MATERIAL SHALL BE EITHER 1) ASPHALT PLANT MIX, TYPE 1 OR TYPE 2, MIN. 2" DEPTH, 2) EROSION CONTROL MAT, OR 3) CONCRETE, AS DIRECTED BY THE ENGINEER. THE SLOPE DRAIN SHALL CONSIST OF A NON-PERFORATED TEMPORARY DRAINAGE PIPE, 12 INCHES IN DIAMETER.

PLAN VIEW

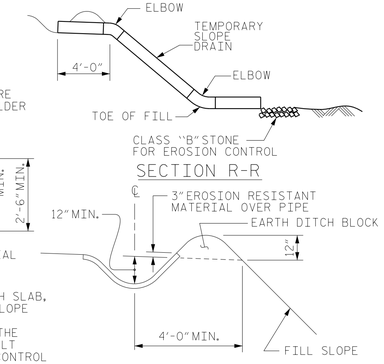

SECTION S-S

TEMPORARY BERM AND SLOPE DRAIN DETAILS

(TO BE USED WHEN SHOULDER BERM GUTTER IS REQUIRED)

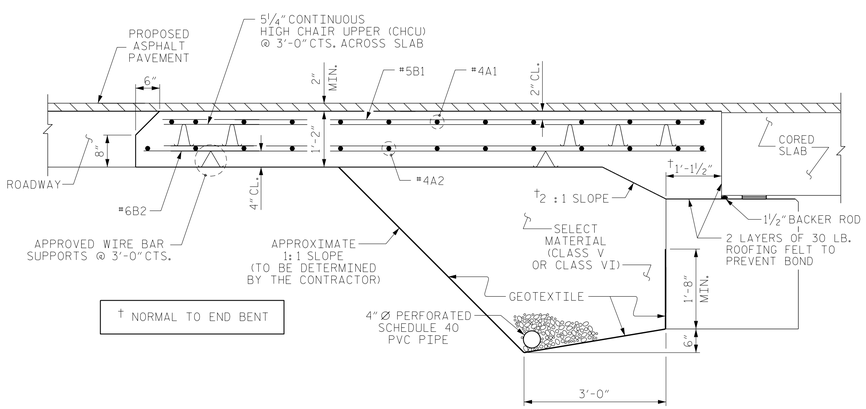

† NORMAL TO END BENT

SECTION THRU SLAB

(TYPE II - MODIFIED APPROACH FILL)

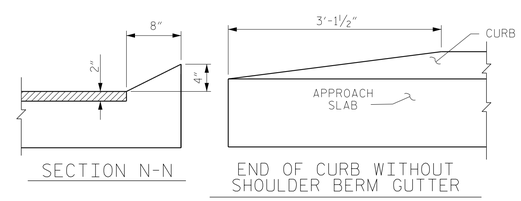

SECTION N-N

END OF CURB WITHOUT SHOULDER BERM GUTTER

CURB DETAILS

SPLICE LENGTHS		
BAR SIZE	EPOXY COATED	UNCOATED
#4	2'-0"	1'-9"
#5	2'-6"	2'-2"
#6	3'-10"	2'-7"

PROJECT NO. B-5651

SAMPSON COUNTY

STATION: 14+70.00 -L-

ASSEMBLED BY : NSC	DATE : 02/19		
CHECKED BY : MKO	DATE : 02/19		
DRAWN BY : SHS/MAA 5-09	REV. 12-17	MAA/THC	
CHECKED BY : BCH 5-09			

DOCUMENT NOT CONSIDERED FINAL UNLESS ALL SIGNATURES COMPLETED

NORTH CAROLINA PROFESSIONAL SEAL 039313 ENGINEER JUSTIN MARK ROBINSON
5/16/2019

RS&H

RS&H Architects-Engineers-Planners, Inc.
8521 Six Forks Road, Suite 400
919-926-4100 FAX 919-846-9080
www.rsandh.com
North Carolina License Nos. 50073 * F-0493 * C-28

STATE OF NORTH CAROLINA
DEPARTMENT OF TRANSPORTATION
RALEIGH

STANDARD
BRIDGE APPROACH SLAB
FOR PRESTRESSED CONCRETE
CORED SLAB UNIT
(SUB-REGIONAL TIER)
90° SKEW

REVISIONS						SHEET NO.
NO.	BY:	DATE:	NO.	BY:	DATE:	S-17
1			3			TOTAL SHEETS
2			4			17

5/7/2019
\\rsandh.com\files\Transportation\P\1030036019 Div 3 Sampson 214 B-5651\Design\Structures\CAD\401_033_B5651_SMU_AS_S-17.dgn
CuanyN

STD. NO. BAS_33_90S

DocuSign Envelope ID: 616F2EEF-EE65-45E5-A032-EE01B0061212

STANDARD NOTES

DESIGN DATA:

SPECIFICATIONS	A.A.S.H.T.O. (CURRENT)
LIVE LOAD	SEE PLANS
IMPACT ALLOWANCE	SEE A.A.S.H.T.O.
STRESS IN EXTREME FIBER OF STRUCTURAL STEEL - AASHTO M270 GRADE 36	20,000 LBS. PER SQ. IN.
- AASHTO M270 GRADE 50W	27,000 LBS. PER SQ. IN.
- AASHTO M270 GRADE 50	27,000 LBS. PER SQ. IN.
REINFORCING STEEL IN TENSION - GRADE 60	24,000 LBS. PER SQ. IN.
CONCRETE IN COMPRESSION	1,200 LBS. PER SQ. IN.
CONCRETE IN SHEAR	SEE A.A.S.H.T.O.
STRUCTURAL TIMBER - TREATED OR UNTREATED EXTREME FIBER STRESS	1,800 LBS. PER SQ. IN.
COMPRESSION PERPENDICULAR TO GRAIN OF TIMBER	375 LBS. PER SQ. IN.
EQUIVALENT FLUID PRESSURE OF EARTH	30 LBS. PER CU. FT. (MINIMUM)

MATERIAL AND WORKMANSHIP:

EXCEPT AS MAY OTHERWISE BE SPECIFIED ON PLANS OR IN THE SPECIAL PROVISIONS, ALL MATERIAL AND WORKMANSHIP SHALL BE IN ACCORDANCE WITH THE 2018 "STANDARD SPECIFICATIONS FOR ROADS AND STRUCTURES" OF THE N. C. DEPARTMENT OF TRANSPORTATION.

STEEL SHEET PILING FOR PERMANENT OR TEMPORARY APPLICATIONS SHALL BE HOT ROLLED.

CONCRETE:

UNLESS OTHERWISE REQUIRED ON PLANS, CLASS A CONCRETE SHALL BE USED FOR ALL PORTIONS OF ALL STRUCTURES WITH THE EXCEPTION THAT: CLASS AA CONCRETE SHALL BE USED IN BRIDGE SUPERSTRUCTURES, ABUTMENT BACKWALLS, AND APPROACH SLABS; AND CLASS B CONCRETE SHALL BE USED FOR SLOPE PROTECTION AND RIP RAP.

CONCRETE CHAMFERS:

UNLESS OTHERWISE NOTED ON THE PLANS, ALL EXPOSED CORNERS ON STRUCTURES SHALL BE CHAMFERED 3/4" WITH THE FOLLOWING EXCEPTIONS: TOP CORNERS OF CURBS MAY BE ROUNDED TO 1 1/2" RADIUS WHICH IS BUILT INTO CURB FORMS; CORNERS OF TRANSVERSE FLOOR EXPANSION JOINTS SHALL BE ROUNDED WITH A 1/4" FINISHING TOOL UNLESS OTHERWISE REQUIRED ON PLANS; AND CORNERS OF EXPANSION JOINTS IN THE ROADWAY FACES AND TOPS OF CURBS AND SIDEWALKS SHALL BE ROUNDED TO A 1/4" RADIUS WITH A FINISHING STONE OR TOOL UNLESS OTHERWISE REQUIRED ON PLANS.

DOWELS:

DOWELS WHEN INDICATED ON PLANS AS FOR CULVERT EXTENSIONS, SHALL BE EMBEDDED AT LEAST 12" INTO THE OLD CONCRETE AND GROUTED INTO PLACE WITH 1:2 CEMENT MORTAR.

ALLOWANCE FOR DEAD LOAD DEFLECTION, SETTLEMENT, ETC. IN CASTING SUPERSTRUCTURES:

BRIDGES SHALL BE BUILT ON THE GRADE OR VERTICAL CURVE SHOWN ON PLANS. SLABS, CURBS AND PARAPETS SHALL CONFORM TO THE GRADE OR CURVE.

ALL DIMENSIONS WHICH ARE GIVEN IN SECTION AND ARE AFFECTED BY DEAD LOAD DEFLECTIONS ARE DIMENSIONS AT CENTER LINE OF BEARING UNLESS OTHERWISE NOTED ON PLANS. IN SETTING FORMS FOR STEEL BEAM BRIDGES AND PRESTRESSED CONCRETE GIRDER BRIDGES, ADJUSTMENTS SHALL BE MADE DUE TO THE DEAD LOAD DEFLECTIONS FOR THE ELEVATIONS SHOWN. WHERE BLOCKS ARE SHOWN OVER BEAMS FOR BUILDING UP TO THE SLAB, THE VERTICAL DIMENSIONS OF THE BLOCKS SHALL BE ADJUSTED BETWEEN BEARINGS TO COMPENSATE FOR DEAD LOAD DEFLECTIONS, VERTICAL CURVE ORDINATE, AND ACTUAL BEAM CAMBER. WHERE BOTTOM OF SLAB IS IN LINE WITH BOTTOM OF TOP FLANGES, DEPTH OF SLAB BETWEEN BEARINGS SHALL BE ADJUSTED TO COMPENSATE FOR DEAD LOAD DEFLECTION, VERTICAL CURVE ORDINATE, AND ACTUAL BEAM CAMBER.

IN SETTING FALSEWORK AND FORMS FOR REINFORCED CONCRETE SPANS, AN ALLOWANCE SHALL BE MADE FOR DEAD LOAD DEFLECTIONS, SETTLEMENT OF FALSEWORK, AND PERMANENT CAMBER WHICH SHALL BE PROVIDED FOR IN ADDITION TO THE ELEVATIONS SHOWN. AFTER REMOVAL OF THE FALSEWORK, THE FINISHED STRUCTURES SHALL CONFORM TO THE PROFILE AND ELEVATIONS SHOWN ON THE PLANS AND CONSTRUCTION ELEVATIONS FURNISHED BY THE ENGINEER.

DETAILED DRAWINGS FOR FALSEWORK OR FORMS FOR BRIDGE SUPERSTRUCTURE AND ANY STRUCTURE OR PARTS OF A STRUCTURE AS NOTED ON THE PLANS SHALL BE SUBMITTED TO THE ENGINEER FOR APPROVAL BEFORE CONSTRUCTION OF THE FALSEWORK OR FORMS IS STARTED.

REINFORCING STEEL:

ALL REINFORCING STEEL SHALL BE DEFORMED. DIMENSIONS RELATIVE TO PLACEMENT OF REINFORCING ARE TO CENTERS OF BARS UNLESS OTHERWISE INDICATED IN THE PLANS. DIMENSIONS ON BAR DETAILS ARE TO CENTERS OF BARS OR ARE OUT TO OUT AS INDICATED ON PLANS.

WIRE BAR SUPPORTS SHALL BE PROVIDED FOR REINFORCING STEEL WHERE INDICATED ON THE PLANS. WHEN BAR SUPPORT PIECES ARE PLACED IN CONTINUOUS LINES, THEY SHALL BE SO PLACED THAT THE ENDS OF THE SUPPORTING WIRES SHALL BE LAPPED TO LOCK LEGS ON ADJOINING PIECES.

STRUCTURAL STEEL:

AT THE CONTRACTOR'S OPTION, HE MAY SUBSTITUTE 7/8" Ø SHEAR STUDS FOR THE 3/4" Ø STUDS SPECIFIED ON THE PLANS. THIS SUBSTITUTION SHALL BE MADE AT THE RATE OF 3 - 7/8" Ø STUDS FOR 4 - 3/4" Ø STUDS, AND STUD SPACING CHANGES SHALL BE MADE AS NECESSARY TO PROVIDE THE SAME EQUIVALENT NUMBER OF 7/8" Ø STUDS ALONG THE BEAM AS SHOWN FOR 3/4" Ø STUDS BASED ON THE RATIO OF 3 - 7/8" Ø STUDS FOR 4 - 3/4" Ø STUDS. STUDS OF THE LENGTH SPECIFIED ON THE PLANS MUST BE PROVIDED. THE MAXIMUM SPACING SHALL BE 2'-0".

EXCEPT AT THE INTERIOR SUPPORTS OF CONTINUOUS BEAMS WHERE THE COVER PLATE IS IN CONTACT WITH BEARING PLATE, THE CONTRACTOR MAY, AT HIS OPTION, SUBSTITUTE FOR THE COVER PLATES DESIGNATED ON THE PLANS COVER PLATES OF THE EQUIVALENT AREA PROVIDED THESE PLATES ARE AT LEAST 5/16" IN THICKNESS AND DO NOT EXCEED A WIDTH EQUAL TO THE FLANGE WIDTH LESS 2" OR A THICKNESS EQUAL TO 2 TIMES THE FLANGE THICKNESS. THE SIZE OF FILLET WELDS SHALL CONFORM TO THE REQUIREMENTS OF THE CURRENT ANSI/AASHTO/AWS "BRIDGE WELDING CODE". ELECTROSLAG WELDING WILL NOT BE PERMITTED.

WITH THE SOLE EXCEPTION OF EDGES AT SURFACES WHICH BEAR ON OTHER SURFACES, ALL SHARP EDGES AND ENDS OF SHAPES AND PLATES SHALL BE SLIGHTLY ROUNDED BY SUITABLE MEANS TO A RADIUS OF APPROXIMATELY 1/16 INCH OR EQUIVALENT FLAT SURFACE AT A SUITABLE ANGLE PRIOR TO PAINTING, GALVANIZING, OR METALLIZING.

HANDRAILS AND POSTS:

METAL STANDARDS AND FACES OF THE CONCRETE END POSTS FOR THE METAL RAIL SHALL BE SET NORMAL TO THE GRADE OF THE CURB, UNLESS OTHERWISE SHOWN ON PLANS. THE METAL RAIL AND TOPS OF CONCRETE POSTS USED WITH THE ALUMINUM RAIL SHALL BE BUILT PARALLEL TO THE GRADE OF THE CURB.

METAL HANDRAILS SHALL BE IN ACCORDANCE WITH THE PLANS. RAILS SHALL BE AS MANUFACTURED FOR BRIDGE RAILING. CASTINGS SHALL BE OF A UNIFORM APPEARANCE. FINS AND OTHER DEFORMATIONS RESULTING FROM CASTING OR OTHERWISE SHALL BE REMOVED IN A MANNER SO THAT A UNIFORM COLORING OF THE COMPLETED CASTING SHALL BE OBTAINED. CASTINGS WITH DISCOLORATIONS OR OF NON-UNIFORM COLORING WILL NOT BE ACCEPTED. CERTIFIED MILL REPORTS ARE REQUIRED FOR METAL RAILS AND POSTS.

SPECIAL NOTES:

GENERALLY, IN CASE OF DISCREPANCY, THIS STANDARD SHEET OF NOTES SHALL GOVERN OVER THE SPECIFICATIONS, BUT THE REMAINDER OF THE PLANS SHALL GOVERN OVER NOTES HEREON, AND SPECIAL PROVISIONS SHALL GOVERN OVER ALL. SEE SPECIFICATIONS ARTICLE 105-4.

ENGLISH

JANUARY, 1990