TIP PROJECT: 17BP.3.PE.88

CONTRACT: DC00409

STATE	STATE PROJECT REFERENCE NO.	SHEET NO.	TOTAL SHEETS
N.C.	17BP.3.PE.88	1	

STATE PROJ. NO.	F.A. PROJ. NO.	DESCRIPTION
17BP.3.PE.88	N/A	PE
17BP.3.ROW.88	N/A	ROW /UTILITIES
17BP.3.R.88	N/A	CONSTRUCTION

STATE OF NORTH CAROLINA
DIVISION OF HIGHWAYS

SAMPSON COUNTY

FORMERLY B–5305

LOCATION: ***BRIDGE NO. 123 OVER BIG SWAMP ON SR 1430 (CARROLL STORE RD.)***

TYPE OF WORK: ***GRADING, DRAINAGE, PAVING, AND STRUCTURE***

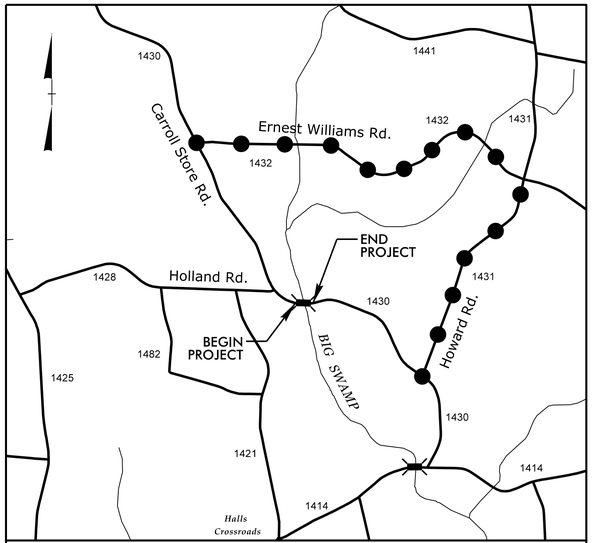

VICINITY MAP

OFF-SITE DETOUR

See Sheet 1A For Index of Sheets
See Sheet 1B For Conventional Symbols

NAD 83/NA 2011

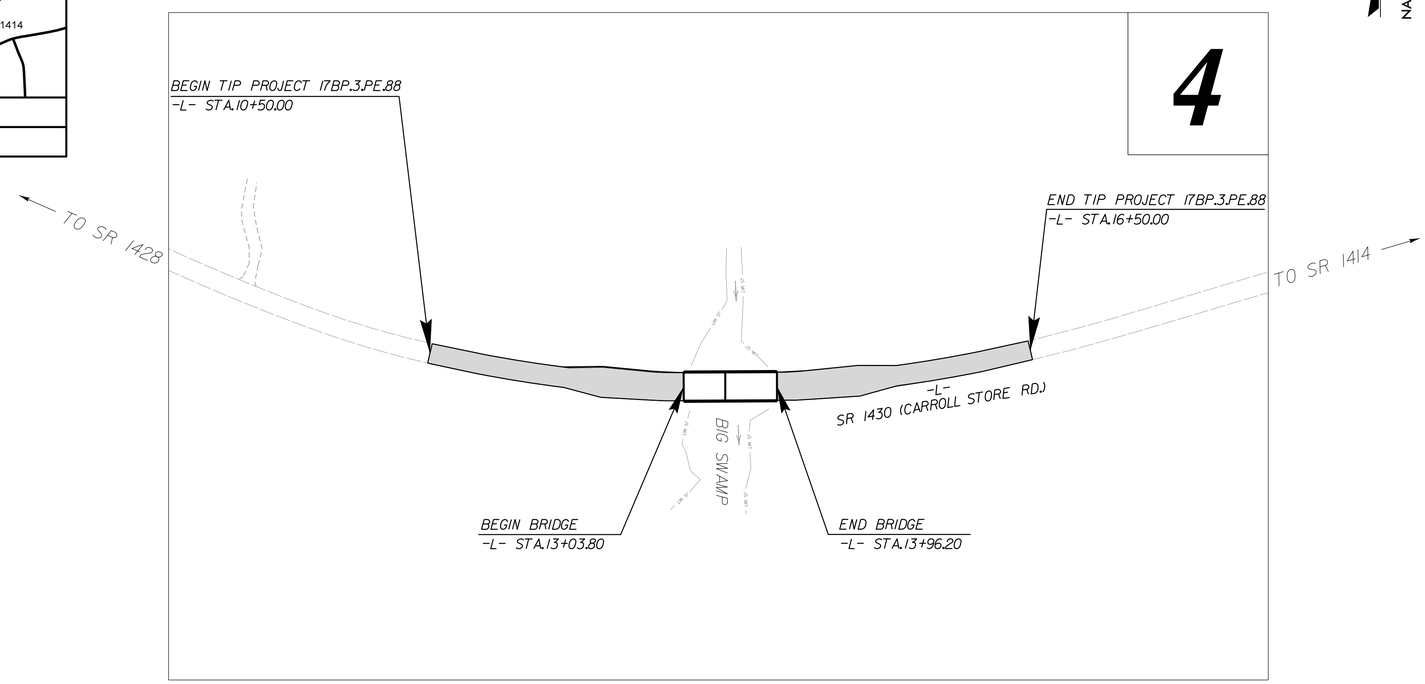

DOCUMENT NOT CONSIDERED FINAL UNLESS ALL SIGNATURES COMPLETED

GRAPHIC SCALES

50 25 0 50 100
PLANS

50 25 0 50 100
PROFILE (HORIZONTAL)

10 5 0 10 20
PROFILE (VERTICAL)

DESIGN DATA

2022 ADT = 341 VPD
2042 ADT = 432 VPD
K = 8%
D = 55%
T = 11% *
V = 60 MPH
* (TTST 3% + DUAL 8%)

FUNC. CLASS. = RURAL LOCAL

SUBREGIONAL TIER

PROJECT LENGTH

LENGTH ROADWAY TIP PROJECT 17BP.3.PE.88	=	0.096 mi.
LENGTH STRUCTURES TIP PROJECT 17BP.3.PE.88	=	0.018 mi.
TOTAL LENGTH TIP PROJECT 17BP.3.PE.88	=	0.114 mi.

Prepared in the Offices of:

STEWART
223 S. WEST ST, STE 1100
RALEIGH, NC 27603
T 919.380.8750
firm License #: C-1051
www.stewartinc.com
PROJECT #1719062.00

vhb
VHB Engineering NC, P.C. (C-3705)
940 Main Campus Drive, Suite 500
Raleigh, NC 27606

2018 STANDARD SPECIFICATIONS

RIGHT OF WAY DATE:
APRIL 26, 2017

LETTING DATE:
SEPTEMBER 29, 2022

ANDY YOUNG, PE
PROJECT ENGINEER

JOSHUA ROEMER, EI
PROJECT DESIGN ENGINEER

DEREK PIELECH, PE
NCDOT CONTACT

HYDRAULICS ENGINEER

DocuSigned by:
Frank Fleming
4BD47ff7f7f7C4A...
SIGNATURE: ***P.E.***
8/28/2022

NORTH CAROLINA PROFESSIONAL SEAL 20147 ENGINEER FRANK T. FLEMING

ROADWAY DESIGN ENGINEER

DocuSigned by:
Andrew P. Young
EF21D93DD62F4EF...
SIGNATURE: ***P.E.***
8/22/2022

NORTH CAROLINA PROFESSIONAL SEAL 034407 ENGINEER ANDREW P. YOUNG

STATE OF NORTH CAROLINA DEPARTMENT OF TRANSPORTATION

09/08/99

8/18/2022
...\Roadway\Proj\B5305_RDY_TSH.dgn
USER:jroemer

PROJECT REFERENCE NO.	SHEET NO.
I7BP.3.PE.88	1A

ROADWAY DESIGN ENGINEER

8/16/2022

NORTH CAROLINA PROFESSIONAL SEAL 034407 ENGINEER ANDREW P. YOUNG

DocuSigned by:
Andrew P. Young
EF21D93DD62E4EF...

Firm License No. C-1053
223 S. West St.
Suite 1100
Raleigh, NC 27603
T: 919.362.8750
www.stewartinc.com

STEWART

DOCUMENT NOT CONSIDERED FINAL UNLESS ALL SIGNATURES COMPLETED

INDEX OF SHEETS

SHEET NUMBER	SHEET
1	TITLE SHEET
1A	INDEX OF SHEETS, GENERAL NOTES, AND STANDARD DRAWINGS
1B	CONVENTIONAL SYMBOLS
2A-1	PAVEMENT SCHEDULE AND TYPICAL SECTIONS
2C-1	METHOD OF CLEARING DETAIL
2C-2	MODIFIED SHOULDER BERM GUTTER DETAIL
2C-3 THRU 2C-4	STRUCTURE ANCHOR UNITS DETAIL
3B-1	ROADWAY SUMMARIES
3D-1	DRAINAGE SUMMARY
3G-1	GEOTECHNICAL SUMMARIES
4	PLAN SHEET
5	PROFILE SHEET
RW01 THRU RW04	SURVEY CONTROL, EXISTING CENTERLINES, RIGHT OF WAY, EASEMENTS AND PROPERTY TIE SHEETS
TMP-1 THRU TMP-3	TRANSPORTATION MANAGEMENT PLANS
PMP-1 THRU PMP-2	PAVEMENT MARKING PLANS
EC-1 THRU EC-5	EROSION CONTROL PLANS
UO-1 THRU UO-2	UTILITIES BY OTHERS PLANS
X-1A	CROSS-SECTION INDEX SHEET
X-1B	CROSS-SECTION SUMMARY SHEET
X-1 THRU X-4	CROSS-SECTIONS
S-1 THRU S-19	STRUCTURE PLANS

EFF. 01-16-2018
REV.

2018 ROADWAY ENGLISH STANDARD DRAWINGS

The following Roadway Standards as appear in "Roadway Standard Drawings" Highway Design Branch - N. C. Department of Transportation - Raleigh, N. C., Dated January, 2018 are applicable to this project and by reference hereby are considered a part of these plans:

STD.NO.	TITLE
DIVISION 2 - EARTHWORK	
225.02	Guide for Grading Subgrade - Secondary and Local
225.04	Method of Obtaining Superelevation - Two Lane Pavement
DIVISION 3 - PIPE CULVERTS	
300.01	Method of Pipe Installation
DIVISION 5 - SUBGRADE, BASES AND SHOULDERS	
560.01	Method of Shoulder Construction - High Side of Superelevated Curve - Method I
DIVISION 6 - ASPHALT BASES AND PAVEMENTS	
654.01	Pavement Repairs
DIVISION 8 - INCIDENTALS	
840.00	Concrete Base Pad for Drainage Structures
840.29	Frames and Narrow Slot Flat Grates
846.01	Concrete Curb, Gutter and Curb & Gutter
846.04	Drop Inlet Installation in Shoulder Berm Gutter
862.01	Guardrail Placement
862.02	Guardrail Installation (Special Detail in lieu of Sheet 6 of 8)
862.03	Structure Anchor Units (Special Detail in lieu of Sheet 1 of 7 and Sheet 2 of 7)
876.02	Guide for Rip Rap at Pipe Outlets

GENERAL NOTES:

2018 SPECIFICATIONS
EFFECTIVE: 01-16-2018
REVISED:

GRADE LINE:
GRADING AND SURFACING:

THE GRADE LINES SHOWN DENOTE THE FINISHED ELEVATION OF THE PROPOSED SURFACING AT GRADE POINTS SHOWN ON THE TYPICAL SECTIONS. GRADE LINES MAY BE ADJUSTED AT THEIR BEGINNING AND ENDING AND AT STRUCTURES AS DIRECTED BY THE ENGINEER IN ORDER TO SECURE A PROPER TIE-IN.

CLEARING:

CLEARING ON THIS PROJECT SHALL BE PERFORMED TO THE LIMITS ESTABLISHED BY MODIFIED METHOD III.

SUPERELEVATION:

ALL CURVES ON THIS PROJECT SHALL BE SUPERELEVATED IN ACCORDANCE WITH STD. NO. 225.04 USING THE RATE OF SUPERELEVATION AND RUNOFF SHOWN ON THE PLANS. SUPERELEVATION IS TO BE REVOLVED ABOUT THE GRADE POINTS SHOWN ON THE TYPICAL SECTIONS.

SHOULDER CONSTRUCTION:

ASPHALT, EARTH, AND CONCRETE SHOULDER CONSTRUCTION ON THE HIGH SIDE OF SUPERELEVATED CURVES SHALL BE IN ACCORDANCE WITH STD. NO. 560.01

GUARDRAIL:

THE GUARDRAIL LOCATIONS SHOWN ON THE PLANS MAY BE ADJUSTED DURING CONSTRUCTION AS DIRECTED BY THE ENGINEER. THE CONTRACTOR SHOULD CONSULT WITH THE ENGINEER PRIOR TO ORDERING GUARDRAIL MATERIAL.

TEMPORARY SHORING:

SHORING REQUIRED FOR THE MAINTENANCE OF TRAFFIC WILL BE PAID FOR AS "EXTRA WORK" IN ACCORDANCE WITH SECTION 104-7.

END BENTS:

THE ENGINEER SHALL CHECK THE STRUCTURE END BENT PLANS, DETAILS, AND CROSS-SECTION PRIOR TO SETTING OF THE SLOPE STAKES FOR THE EMBANKMENT OR EXCAVATION APPROACHING A BRIDGE.

UTILITIES:

UTILITY OWNERS ON THIS PROJECT ARE

South River Electric Membership Corporation - Power

Star Telephone Membership Corporation - Telecommunications

ANY RELOCATION OF EXISTING UTILITIES WILL BE ACCOMPLISHED BY OTHERS.

RIGHT-OF-WAY MARKERS:

ALL RIGHT-OF-WAY MARKERS ON THIS PROJECT SHALL BE PLACED BY OTHERS.

8/17/99
8/16/2022
I7BP.3.PE.88_RDY_PSH01A.dgn
USER: ypenner

9/10/2021

PROJECT REFERENCE NO.	SHEET NO.
17BP.3.PE.88	1B

STATE OF NORTH CAROLINA, DIVISION OF HIGHWAYS

CONVENTIONAL PLAN SHEET SYMBOLS

Note: Not to Scale

BOUNDARIES AND PROPERTY:

- State Line
- County Line
- Township Line
- City Line
- Reservation Line
- Property Line
- Existing Iron Pin (EIP)
- Computed Property Corner
- Existing Concrete Monument (ECM)
- Parcel/Sequence Number
- Existing Fence Line
- Proposed Woven Wire Fence
- Proposed Chain Link Fence
- Proposed Barbed Wire Fence
- Existing Wetland Boundary
- Proposed Wetland Boundary
- Existing Endangered Animal Boundary
- Existing Endangered Plant Boundary
- Existing Historic Property Boundary
- Known Contamination Area: Soil
- Potential Contamination Area: Soil
- Known Contamination Area: Water
- Potential Contamination Area: Water
- Contaminated Site: Known or Potential

BUILDINGS AND OTHER CULTURE:

- Gas Pump Vent or U/G Tank Cap
- Sign
- Well
- Small Mine
- Foundation
- Area Outline
- Cemetery
- Building
- School
- Church
- Dam

HYDROLOGY:

- Stream or Body of Water
- Hydro, Pool or Reservoir
- Jurisdictional Stream
- Buffer Zone 1
- Buffer Zone 2
- Flow Arrow
- Disappearing Stream
- Spring
- Wetland
- Proposed Lateral, Tail, Head Ditch
- False Sump

RAILROADS:

- Standard Gauge
- RR Signal Milepost
- Switch
- RR Abandoned
- RR Dismantled

RIGHT OF WAY & PROJECT CONTROL:

- Primary Horiz Control Point
- Primary Horiz and Vert Control Point
- Secondary Horiz and Vert Control Point
- Vertical Benchmark
- Existing Right of Way Monument
- Proposed Right of Way Monument (Rebar and Cap)
- Proposed Right of Way Monument (Concrete)
- Existing Permanent Easement Monument
- Proposed Permanent Easement Monument (Rebar and Cap)
- Existing C/A Monument
- Proposed C/A Monument (Rebar and Cap)
- Proposed C/A Monument (Concrete)
- Existing Right of Way Line
- Proposed Right of Way Line
- Existing Control of Access Line
- Proposed Control of Access Line
- Proposed ROW and CA Line
- Existing Easement Line
- Proposed Temporary Construction Easement
- Proposed Temporary Drainage Easement
- Proposed Permanent Drainage Easement
- Proposed Permanent Drainage/Utility Easement
- Proposed Permanent Utility Easement
- Proposed Temporary Utility Easement
- Proposed Aerial Utility Easement

ROADS AND RELATED FEATURES:

- Existing Edge of Pavement
- Existing Curb
- Proposed Slope Stakes Cut
- Proposed Slope Stakes Fill
- Proposed Curb Ramp
- Existing Metal Guardrail
- Proposed Guardrail
- Existing Cable Guiderail
- Proposed Cable Guiderail
- Equality Symbol
- Pavement Removal

VEGETATION:

- Single Tree
- Single Shrub
- Hedge
- Woods Line
- Orchard
- Vineyard

EXISTING STRUCTURES:

MAJOR:

- Bridge, Tunnel or Box Culvert
- Bridge Wing Wall, Head Wall and End Wall

MINOR:

- Head and End Wall
- Pipe Culvert
- Footbridge
- Drainage Box: Catch Basin, DI or JB
- Paved Ditch Gutter
- Storm Sewer Manhole
- Storm Sewer

UTILITIES:

** SUE – Subsurface Utility Engineering*
LOS – Level of Service – A,B,C or D (Accuracy)

POWER:

- Existing Power Pole
- Proposed Power Pole
- Existing Joint Use Pole
- Proposed Joint Use Pole
- Power Manhole
- Power Line Tower
- Power Transformer
- U/G Power Cable Hand Hole
- H-Frame Pole
- U/G Power Line Test Hole (SUE – LOS A)*
- U/G Power Line (SUE – LOS B)*
- U/G Power Line (SUE – LOS C)*
- U/G Power Line (SUE – LOS D)*

TELEPHONE:

- Existing Telephone Pole
- Proposed Telephone Pole
- Telephone Manhole
- Telephone Pedestal
- Telephone Cell Tower
- U/G Telephone Cable Hand Hole
- U/G Telephone Test Hole (SUE – LOS A)*
- U/G Telephone Cable (SUE – LOS B)*
- U/G Telephone Cable (SUE – LOS C)*
- U/G Telephone Cable (SUE – LOS D)*
- U/G Telephone Conduit (SUE – LOS B)*
- U/G Telephone Conduit (SUE – LOS C)*
- U/G Telephone Conduit (SUE – LOS D)*
- U/G Fiber Optics Cable (SUE – LOS B)*
- U/G Fiber Optics Cable (SUE – LOS C)*
- U/G Fiber Optics Cable (SUE – LOS D)*

WATER:

- Water Manhole
- Water Meter
- Water Valve
- Water Hydrant
- U/G Water Line Test Hole (SUE – LOS A)*
- U/G Water Line (SUE – LOS B)*
- U/G Water Line (SUE – LOS C)*
- U/G Water Line (SUE – LOS D)*
- Above Ground Water Line

TV:

- TV Pedestal
- TV Tower
- U/G TV Cable Hand Hole
- U/G TV Test Hole (SUE – LOS A)*
- U/G TV Cable (SUE – LOS B)*
- U/G TV Cable (SUE – LOS C)*
- U/G TV Cable (SUE – LOS D)*
- U/G Fiber Optic Cable (SUE – LOS B)*
- U/G Fiber Optic Cable (SUE – LOS C)*
- U/G Fiber Optic Cable (SUE – LOS D)*

GAS:

- Gas Valve
- Gas Meter
- U/G Gas Line Test Hole (SUE – LOS A)*
- U/G Gas Line (SUE – LOS B)*
- U/G Gas Line (SUE – LOS C)*
- U/G Gas Line (SUE – LOS D)*
- Above Ground Gas Line

SANITARY SEWER:

- Sanitary Sewer Manhole
- Sanitary Sewer Cleanout
- U/G Sanitary Sewer Line
- Above Ground Sanitary Sewer
- SS Force Main Line Test Hole (SUE – LOS A)*
- SS Force Main Line (SUE – LOS B)*
- SS Force Main Line (SUE – LOS C)*
- SS Force Main Line (SUE – LOS D)*

MISCELLANEOUS:

- Utility Pole
- Utility Pole with Base
- Utility Located Object
- Utility Traffic Signal Box
- Utility Unknown U/G Line (SUE – LOS B)*
- U/G Tank; Water, Gas, Oil
- Underground Storage Tank, Approx. Loc.
- A/G Tank; Water, Gas, Oil
- Geoenvironmental Boring
- Abandoned According to Utility Records — AATUR
- End of Information — E.O.I.

STEWART
Firm License No. C-1051
223 S. West St.
Suite 1100
Raleigh, NC 27603
T 919.380.8750
www.stewartinc.com

PROJECT REFERENCE NO.	SHEET NO.
17BP.3.PE.88	2A-1

ROADWAY DESIGN ENGINEER
NORTH CAROLINA PROFESSIONAL SEAL 034407 ENGINEER ANDREW P. YOUNG
DocuSigned by: Andrew P. Young EF21D93DD62F4EF... 8/2/2022

PAVEMENT DESIGN ENGINEER
NORTH CAROLINA PROFESSIONAL SEAL 022896 ENGINEER CARK S. MORRISON
DocuSigned by: Cark S. Morrison B0A110DD1E004C4... 8/2/2022

DOCUMENT NOT CONSIDERED FINAL UNLESS ALL SIGNATURES COMPLETED

PAVEMENT SCHEDULE

(FINAL PAVEMENT DESIGN)

C1	PROP. APPROX. 2½" ASPHALT CONCRETE SURFACE COURSE, TYPE S9.5B, AT AN AVERAGE RATE OF 137.5 LBS. PER SQ. YD. IN EACH OF TWO LAYERS.
C2	PROP. VAR. DEPTH ASPHALT CONCRETE SURFACE COURSE, TYPE S9.5B, AT AN AVERAGE RATE OF 110 LBS. PER SQ. YD. PER 1" DEPTH. TO BE PLACED IN LAYERS NOT TO EXCEED 1½" IN DEPTH.
E1	PROP. APPROX. 4" ASPHALT CONCRETE BASE COURSE, TYPE B25.0C, AT AN AVERAGE RATE OF 456 LBS. PER SQ. YD.
E2	PROP. VAR. DEPTH ASPHALT CONCRETE BASE COURSE, TYPE B25.0C, AT AN AVERAGE RATE OF 114 LBS. PER SQ. YD. PER 1" DEPTH. TO BE PLACED IN LAYERS NOT LESS THAN 3" IN DEPTH OR GREATER THAN 5½" IN DEPTH.
R1	MODIFIED SHOULDER BERM GUTTER (SEE DETAIL SHEET 2C-2)
T	EARTH MATERIAL
U	EXISTING PAVEMENT
W	ASPHALT WEDGING (SEE DETAIL)

NOTE: PAVEMENT EDGE SLOPES ARE 1:1, UNLESS SHOWN OTHERWISE

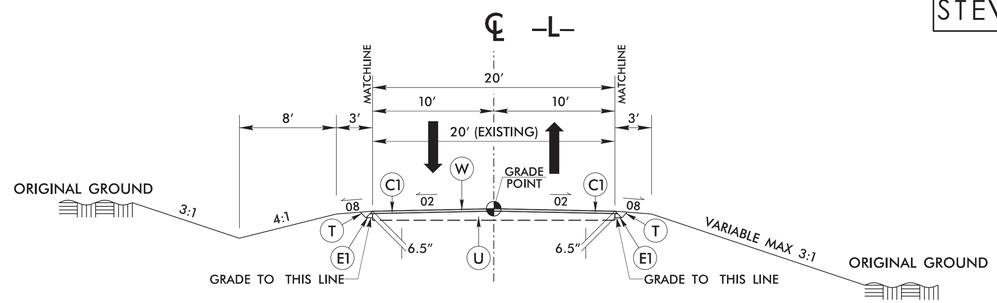

TYPICAL SECTION NO. 1

–L– STA. 10+50.00 TO –L– STA. 12+50.00
–L– STA. 14+50.00 TO –L– STA. 16+50.00

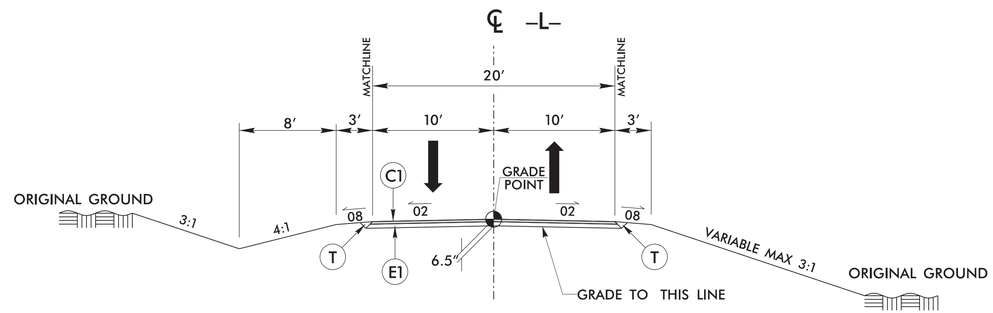

TYPICAL SECTION NO. 2

–L– STA. 12+50.00 TO –L– STA. 13+03.80 (BEGIN BRIDGE)
–L– STA. 13+96.20 (END BRIDGE) TO –L– STA. 14+50.00

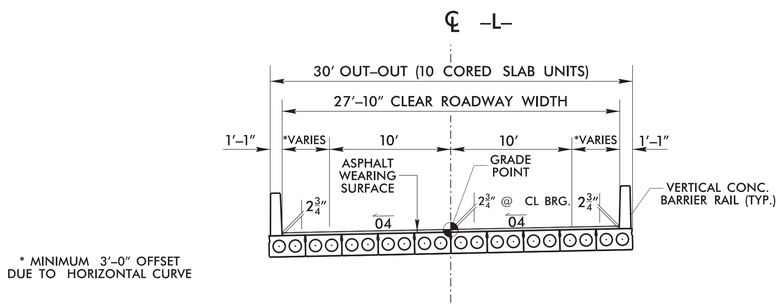

* MINIMUM 3′–0″ OFFSET DUE TO HORIZONTAL CURVE

TYPICAL SECTION NO. 3

–L– STA. 13+03.80 (BEGIN BRIDGE) TO –L– STA. 13+96.20 (END BRIDGE)

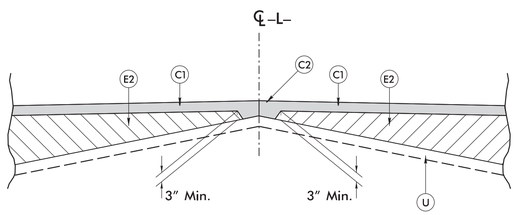

DETAIL SHOWING METHOD OF WEDGING

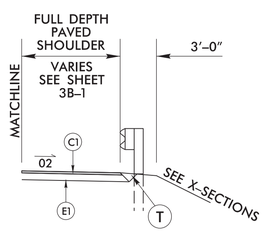

DETAIL SHOWING PAVING TO THE FACE OF GUARDRAIL

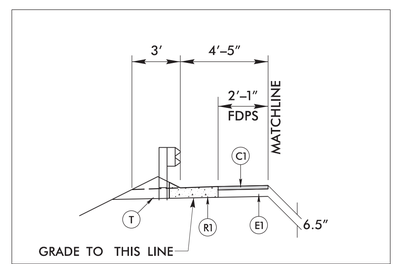

DETAIL SHOWING GUARDRAIL WITH MODIFIED SHOULDER BERM GUTTER

–L– STA. 14+07.06 TO –L– STA. 14+22.00 (LEFT)

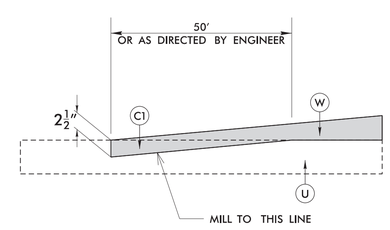

DETAIL SHOWING MILLED PAVEMENT PROFILE TIE–IN

REVISIONS

8/17/99

8/1/2022
r:\Roadway\Proj\B5305_RDY_TYP.dgn
USER:ddavis

PROJECT REFERENCE NO.	SHEET NO.
17BP.3.PE.88	2C-1

STATE OF NORTH CAROLINA
DEPT. OF TRANSPORTATION
DIVISION OF HIGHWAYS
RALEIGH, N.C.

ENGLISH DETAIL DRAWING FOR
METHOD OF CLEARING
MODIFIED METHOD - III

SHEET 1 OF 1
200D03

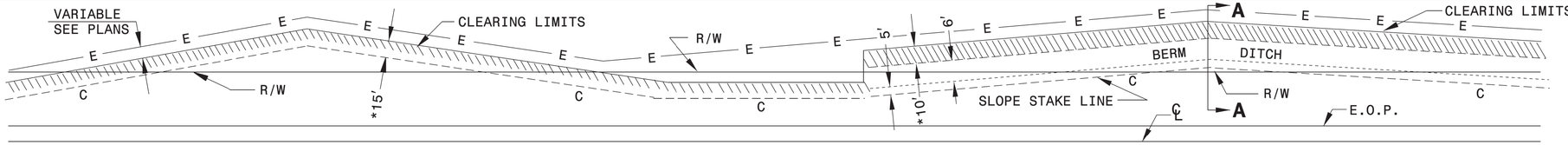

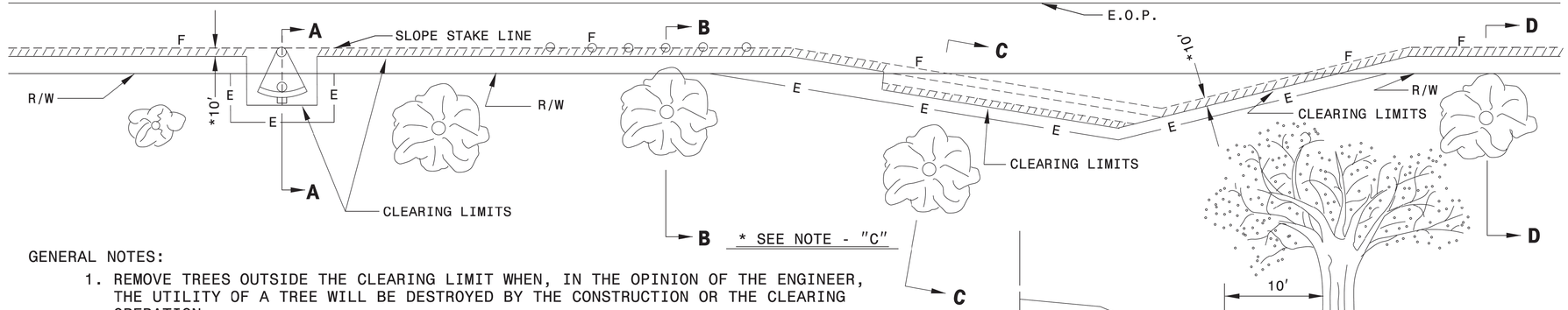

GENERAL NOTES:

1. REMOVE TREES OUTSIDE THE CLEARING LIMIT WHEN, IN THE OPINION OF THE ENGINEER, THE UTILITY OF A TREE WILL BE DESTROYED BY THE CONSTRUCTION OR THE CLEARING OPERATION.
2. CLEAR IN ACCORDANCE WITH THIS STANDARD EXCEPT WHERE ADDITIONAL CLEARING IS REQUIRED FOR SAFETY AS SHOWN ON THE PLANS.

METHOD III CLEARING LIMITS

(A) CUTS -- CLEAR TO CONSTRUCTION LIMITS.
(B) FILLS - CLEAR TO 5'/10' * BEYOND CONSTRUCTION LIMITS, UNLESS SPECIFIED OTHERWISE BY WETLAND PERMIT.
(C) CUTS AND FILLS - WHEN THE CLEARING LIMITS (A AND B) EXCEED THE PROPOSED R/W OR PROPOSED CONSTRUCTION EASEMENTS, THEN CLEAR ONLY TO THE R/W OR CONSTRUCTION EASEMENT WHICHEVER IS GREATER.

* FOR FILL HEIGHTS LESS THAN 10' CLEAR TO 5' BEYOND CONSTRUCTION LIMITS.
* FOR FILL HEIGHTS 10' OR GREATER CLEAR TO 10' BEYOND CONSTRUCTION LIMITS.
** PLACE SILT FENCE AT 5' BEYOND TOE OF SLOPE IN FILL SECTIONS WITH LESS THAN 10'. PLACE SILT FENCE AT 10' BEYOND TOE OF SLOPE IN FILL SECTIONS WITH 10' OR GREATER.

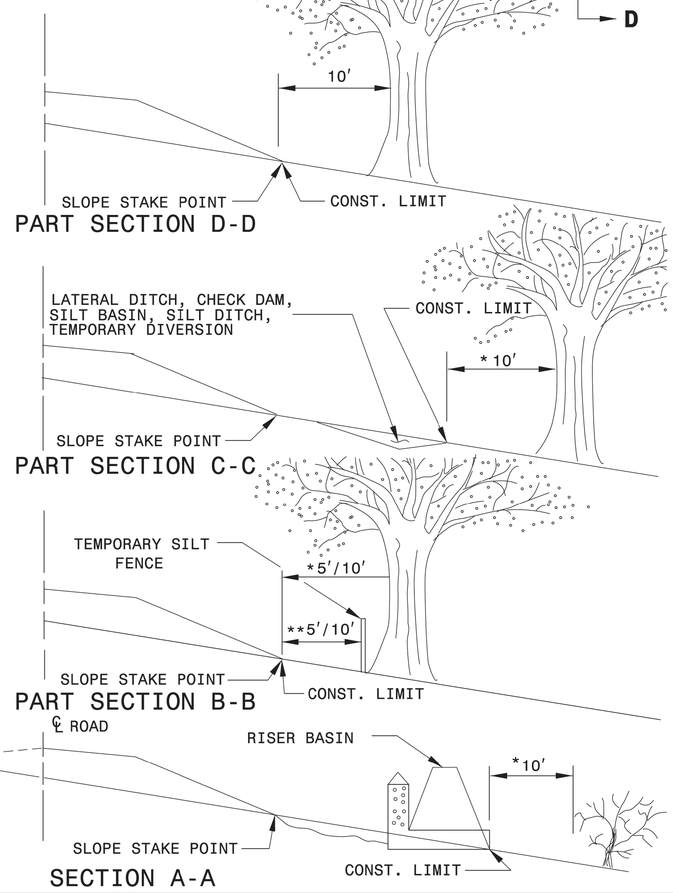

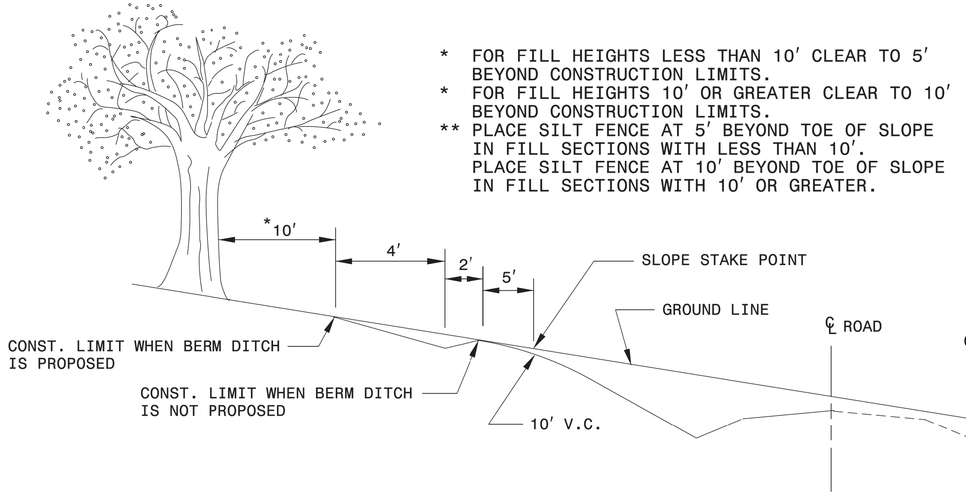

STATE OF NORTH CAROLINA
DEPT. OF TRANSPORTATION
DIVISION OF HIGHWAYS
RALEIGH, N.C.

ENGLISH DETAIL DRAWING FOR
METHOD OF CLEARING
MODIFIED METHOD - III

SHEET 1 OF 1
200D03

NORTH CAROLINA PROFESSIONAL SEAL 022071 ENGINEER RONALD HILTON DAVENPORT JR.
8/9/2022
DocuSigned by: Ron Davenport
F81B6038A47A442...

DOCUMENT NOT CONSIDERED FINAL UNLESS ALL SIGNATURES COMPLETED

CONTRACT STANDARDS AND DEVELOPMENT UNIT
Office 919-707-6950 FAX 919-250-4119

SEE TITLE BLOCK

ORIGINAL BY:	T.S.S.	DATE:	FEB.2000
MODIFIED BY:	K.A.K.	DATE:	AUG.2016
CHECKED BY:		DATE:	
FILE SPEC.:	kkempf/english/0200d301.dgn		

5/14/99

PROJECT REFERENCE NO.	SHEET NO.
17BP.3.PE.88	2C-2

STATE OF
NORTH CAROLINA
DEPT. OF TRANSPORTATION
DIVISION OF HIGHWAYS
RALEIGH, N.C.

ENGLISH DETAIL DRAWING FOR
MODIFIED SHOULDER BERM GUTTER

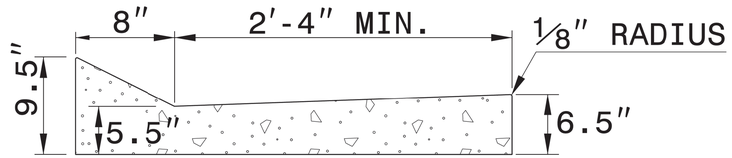

MODIFIED SHOULDER BERM GUTTER

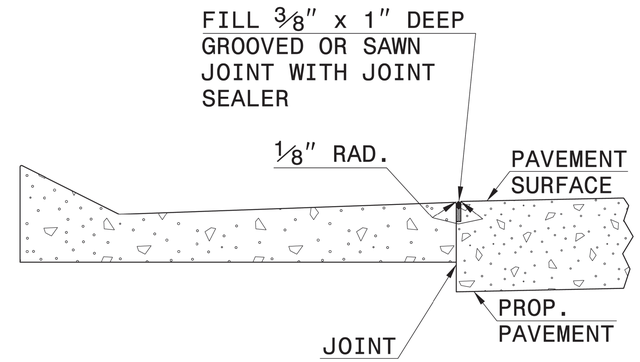

LONGITUDINAL JOINT

GENERAL NOTES:
- PLACE CONTRACTION JOINTS AT 10′ INTERVALS, EXCEPT THAT A 15′ SPACING MAY BE USED WHEN A MACHINE IS USED OR WHEN SATISFACTORY SUPPORT FOR THE FACE FORM CAN BE OBTAINED WITHOUT THE USE OF TEMPLATES AT 10′ INTERVALS.
- JOINT SPACING MAY BE ALTERED IF REQUIRED BY THE ENGINEER.
- CONTRACTION JOINTS MAY BE INSTALLED WITH THE USE OF TEMPLATES OR FORMED BY OTHER APPROVED METHODS. CONSTRUCT NON-TEMPLATE FORMED JOINTS A MIN. OF 1½″ DEEP.
- FILL ALL CONSTRUCTION JOINTS WITH JOINT FILLER AND SEALER.
- SPACE EXPANSION JOINTS AT 90′ INTERVALS AND ADJACENT TO ALL RIGID OBJECTS.

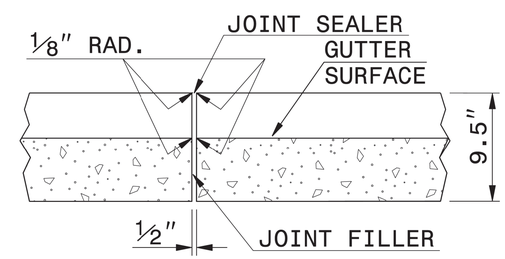

TRANSVERSE EXPANSION JOINT IN CURB AND GUTTER

SECTION VIEW OF JOINTS

SHEET OF
846D01

STATE OF
NORTH CAROLINA
DEPT. OF TRANSPORTATION
DIVISION OF HIGHWAYS
RALEIGH, N.C.

ENGLISH DETAIL DRAWING FOR
MODIFIED SHOULDER BERM GUTTER

SHEET OF
846D01

NORTH CAROLINA PROFESSIONAL SEAL 022071 ENGINEER RONALD ELTON DAVENPORT JR.
8/9/2022
DocuSigned by: Ron Davenport
F8186038A47A442...

DOCUMENT NOT CONSIDERED FINAL UNLESS ALL SIGNATURES COMPLETED

CONTRACT STANDARDS AND DEVELOPMENT UNIT
Office 919-707-6950 FAX 919-250-4119

SEE TITLE BLOCK

ORIGINAL BY: kkempf DATE: 11/13/08
MODIFIED BY: DATE:
CHECKED BY: DATE:
FILE SPEC.: special details/kkempf/english/117x79 tbdi.dgn

$$$$$$$$$$CSTLWE$$$$
$$$$$$$$$$DGN$$$$$$$$
$$$$$$$$$$USERNAME$$$$

$$$$$$SYSTIME$$$$$
$$$$$$$$$$$$$$$$$$DGN$$$$$$$$$$$$$$$$
$$$$USERNAME$$$$

STATE OF NORTH CAROLINA
DEPT. OF TRANSPORTATION
DIVISION OF HIGHWAYS
RALEIGH, N.C.

ENGLISH DETAIL DRAWING FOR
STRUCTURE ANCHOR UNITS
GUARDRAIL ANCHOR UNIT, TYPE III FOR ATTACHMENT TO
RAIL ON BRIDGE - SUB REGIONAL TIER

SHEET 2 OF 7
862d03

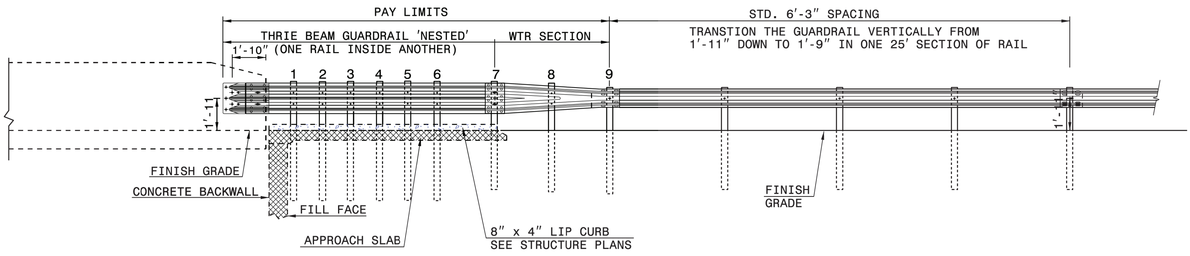

ELEVATION

NOTE:
**POST NOT REQUIRED FOR SKEW ANGLES GREATER THAN 150° OR LESS THAN 30° UNLESS OTHERWISE DIRECTED BY THE ENGINEER.
*THE DISTANCE FROM END OF BRIDGE RAIL TO CENTER LINE OF THE FIRST POST SHOULD BE 11½" IF CONCRETE BACKWALL IS NOT PRESENT.
-SHOULDER BERM GUTTER MUST BE INSTALLED TO THE LIMITS 8" x 4" LIP CURB IS SHOWN IF ANCHOR UNIT IS NOT ADJACENT TO AN APPROACH SLAB.
-MEASURE GUARDRAIL HEIGHT FROM THE TOP OF ADJACENT SURFACE (SHOULDER, BERM, OR GUTTER).
-LAP JOINTS IN THE DIRECTION OF TRAFFIC FLOW.
-SEE SHEET 5 FOR POST SECTIONS 1 THRU 9.

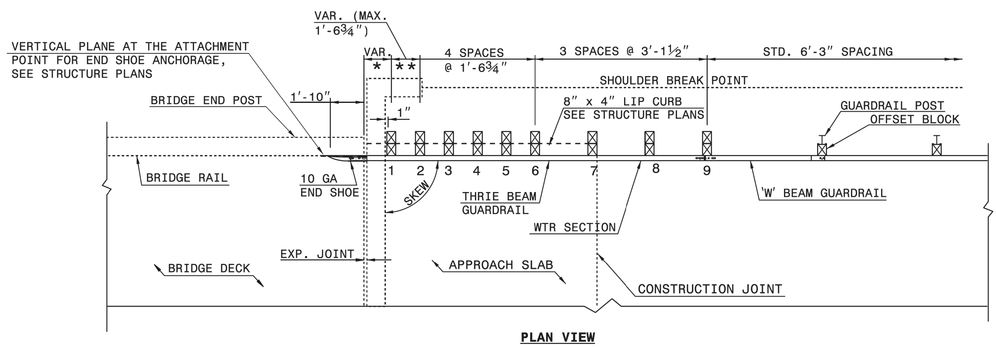

PLAN VIEW

GUARDRAIL ANCHOR UNIT, TYPE III FOR ATTACHMENT TO RAIL ON BRIDGE - SUB REGIONAL TIER

STATE OF NORTH CAROLINA
DEPT. OF TRANSPORTATION
DIVISION OF HIGHWAYS
RALEIGH, N.C.

ENGLISH DETAIL DRAWING FOR
STRUCTURE ANCHOR UNITS
GUARDRAIL ANCHOR UNIT, TYPE III FOR ATTACHMENT TO
RAIL ON BRIDGE - SUB REGIONAL TIER

SHEET 2 OF 7
862d03

STATE OF NORTH CAROLINA
DEPT. OF TRANSPORTATION
DIVISION OF HIGHWAYS
RALEIGH, N.C.

ENGLISH DETAIL DRAWING FOR
STRUCTURE ANCHOR UNITS
GUARDRAIL ANCHOR UNIT, TYPE III

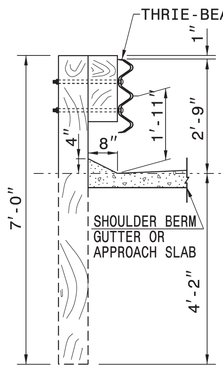

SECTION OF THRIE BEAM POSTS 1 THRU 6

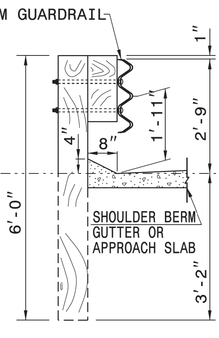

SECTION OF THRIE BEAM POST 7

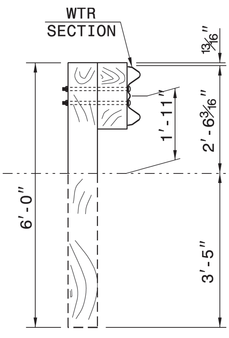

SECTION OF WTR BEAM POST 8

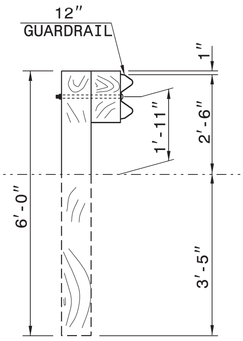

SECTION OF 'W' BEAM POST 9

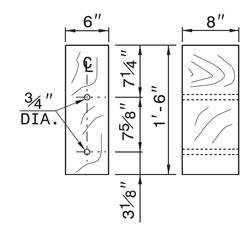

THRIE BEAM OFFSET BLOCK

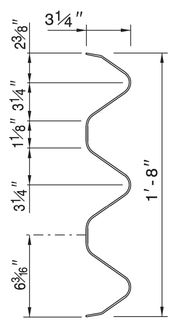

THRIE-BEAM SECTION

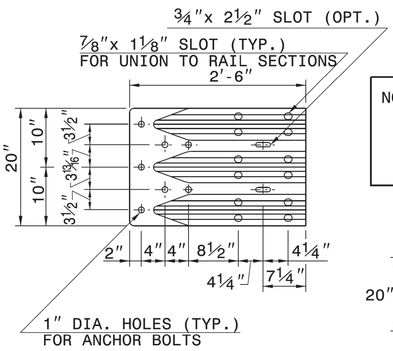

END SHOE

NOTE: THE MID POST AND OFFSET BLOCK OF THE WTR SECTION WILL REQUIRE SPECIAL BOLT HOLE DRILLING IN THE THRIE BEAM OFFSET BLOCK AND LINE POST.

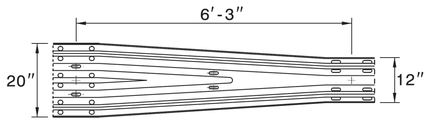

WTR SECTION
ELEVATION VIEW

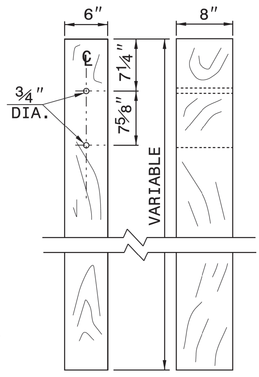

THRIE BEAM LINE POST

STATE OF NORTH CAROLINA
DEPT. OF TRANSPORTATION
DIVISION OF HIGHWAYS
RALEIGH, N.C.

ENGLISH DETAIL DRAWING FOR
STRUCTURE ANCHOR UNITS
GUARDRAIL ANCHOR UNIT, TYPE III

SHEET 3 OF 7
862d03

DOCUMENT NOT CONSIDERED FINAL UNLESS ALL SIGNATURES COMPLETED

SEE TITLE BLOCK

ORIGINAL BY: J. HOWERTON DATE: 06-22-12
MODIFIED BY: DATE:
CHECKED BY: DATE:
FILE SPEC.:

CONTRACT STANDARDS AND DEVELOPMENT UNIT
Office 919-707-6950 FAX 919-250-4119

Digitally signed by Ron Davenport
DN: cn=Ron Davenport, c=US, o=NCDOT, ou=Contract Standards and Development Unit, email=rdavenport@ncdot.gov
Date: 2022.08.09 08:39:00 -04'00'

NORTH CAROLINA PROFESSIONAL SEAL 022071 ENGINEER RONALD E. DAVENPORT 8/9/2022

PROJECT REFERENCE NO.	SHEET NO.
17BP.3.PE.88	2C-3

PROJECT REFERENCE NO.	SHEET NO.
17BP.3.PE.88	2C-4

STATE OF
NORTH CAROLINA
DEPT. OF TRANSPORTATION
DIVISION OF HIGHWAYS
RALEIGH, N.C.

ENGLISH DETAIL DRAWING FOR

TYPE III - SHOP CURVED
STRUCTURE ANCHOR UNIT

SHEET 1 OF 1

TYPE III SC

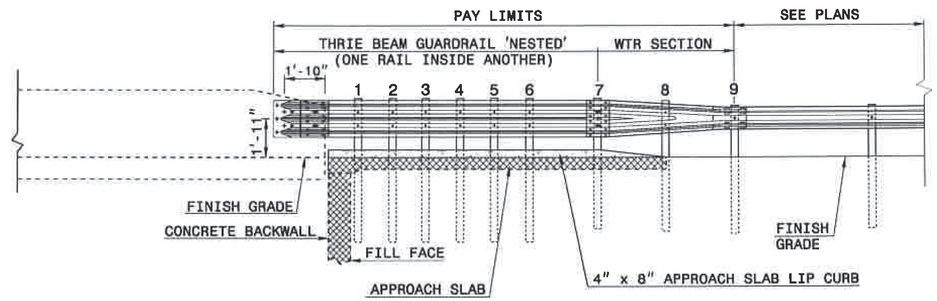

ELEVATION

SEE ROADWAY PLANS FOR END TREATMENT

NOTE:
- **POST NOT REQUIRED FOR SKEW ANGLES GREATER THAN 150° OR LESS THAN 30° UNLESS OTHERWISE DIRECTED BY THE ENGINEER.
- *THE DISTANCE FROM END OF BRIDGE RAIL TO CENTER LINE OF THE FIRST POST SHOULD BE 11½" IF CONCRETE BACKWALL IS NOT PRESENT.
- -SHOULDER BERM GUTTER MUST BE INSTALLED TO THE LIMITS 8" x 4" LIP CURB IS SHOWN IF ANCHOR UNIT IS NOT ADJACENT TO AN APPROACH SLAB.
- -MEASURE GUARDRAIL HEIGHT FROM THE TOP OF ADJACENT SURFACE (SHOULDER, BERM, OR GUTTER).
- -USE NO STEEL POSTS WITHIN THE GUARDRAIL ANCHOR UNIT LIMITS.
- -LAP JOINTS IN THE DIRECTION OF TRAFFIC FLOW.
- -SEE STANDARD 862.03 SHEET 4 FOR POST SECTIONS 1 THRU 9.

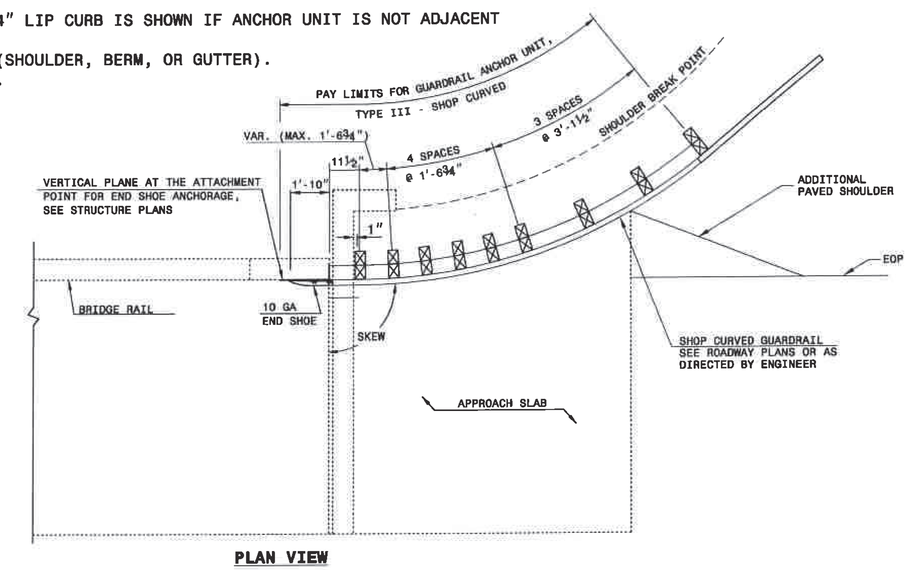

PLAN VIEW

GUARDRAIL ANCHOR UNIT, TYPE III - SHOP CURVED FOR ATTACHMENT TO RAIL ON BRIDGE

STATE OF
NORTH CAROLINA
DEPT. OF TRANSPORTATION
DIVISION OF HIGHWAYS
RALEIGH, N.C.

ENGLISH DETAIL DRAWING FOR

TYPE III - SHOP CURVED
STRUCTURE ANCHOR UNIT

SHEET 1 OF 1

TYPE III SC

NORTH CAROLINA PROFESSIONAL SEAL 022071 ENGINEER RONALD ELTON DAVENPORT, JR.
8/9/2022

DocuSigned by:
Ron Davenport
F81B6038A47A442...

CONTRACT STANDARDS AND DEVELOPMENT UNIT
Office 919-707-6950 FAX 919-250-4119

SEE PLATE FOR TITLE

ORIGINAL BY: E.E.Ward DATE: 4-4-02
MODIFIED BY: T.S.Spell DATE: 5-29-09
CHECKED BY: DATE:
FILE SPEC.: ward:\usr\details\stand\862stds\typeiiisc.dgn

DOCUMENT NOT CONSIDERED FINAL UNLESS ALL SIGNATURES COMPLETED

SUMMARY OF EARTHWORK

IN CUBIC YARDS

Station	Station	Uncl. Excav.	Embank. +%	Borrow	Waste
-L- Sta. 10+50.00	-L- Sta. 13+03.80	3	152	149	
-L- Sta. 13+96.20	-L- Sta. 16+50.00	11	70	59	
SUBTOTAL:		14	222	208	
EST. 5% REPLACE TOPSOIL ON BORROW PIT				11	
PROJECT TOTALS:		14	222	219	
GRAND TOTAL:		14	222	219	
SAY:		**15**		**230**	

UNDERCUT EXCAVATION = 600 C.Y. (CONTINGENCY)
SELECT GRANULAR MATERIAL = 600 C.Y. (CONTINGENCY)
GEOTEXTILE FOR SOIL STABILIZATION = 600 S.Y. (CONTINGENCY)*

*Total square yards of Geotextile for Soil Stabilization is only the estimated quantity Contingency and only represents a portion of the geotextile quantity shown in the Item Sheets of the Proposal.

Note: Earthwork quantities are calculated by the Roadway Design Unit. These earthwork quantities are based in part on subsurface data provided by the Geotechnical Engineering Unit.	Note: Approximate quantities only. Unclassified Excavation, Borrow Excavation, Fine Grading, Clearing and Grubbing, and Removal of Existing Pavement will be paid for at the contract lump sum price for grading.

MODIFIED SHOULDER BERM GUTTER SUMMARY

IN LINEAR FEET

LINE	Station	Station	LENGTH
-L- (LT.)	14+07.06	14+22.00	14.94
		TOTAL:	14.94
		SAY:	15

"N" = DISTANCE FROM EDGE OF LANE TO FACE OF GUARDRAIL
TOTAL SHOULDER WIDTH = DISTANCE FROM EDGE OF TRAVEL LANE TO SHOULDER BREAK POINT.
FLARE LENGTH = DISTANCE FROM LAST SECTION OF PARALLEL GUARDRAIL TO END OF GUARDRAIL
W = TOTAL WIDTH OF FLARE FROM BEGINNING OF TAPER TO END OF GUARDRAIL

GUARDRAIL SUMMARY

G = GATING IMPACT ATTENUATOR TYPE 350
NG = NON-GATING IMPACT ATTENUATOR TYPE 350

SURVEY LINE	BEG. STA.	END STA.	LOCATION	LENGTH			WARRANT POINT		"N" DIST. FROM E.O.L.	TOTAL SHOUL WIDTH	FLARE LENGTH		W		ANCHORS									IMPACT ATTENUATOR TYPE 350		SINGLE FACED CONCRETE BARRIER	REMOVE EXISTING GUARDRAIL	REMOVE & STOCKPILE EXISTING GUARDRAIL	REMARKS
				STRAIGHT	SHOP CURVED	DOUBLE FACED	APPROACH END	TRAILING END			APPROACH END	TRAILING END	APPROACH END	TRAILING END	XI MOD	XI	GREU, TL-3	M-350	SHOP CURVE TYPE III	TYPE III	CAT-1	VI MOD	BIC	G	NG				
-L-	12+23.05	13+04.30	RT	81.25'			13+04.30		4'-9"	7'-9"	50'		1'				1			1									GRAU 350 TL-3, SEE DETAIL SHEET 2C-3
-L-	12+22.04	13+03.29	LT	81.25'				13+03.29	3'-11"	6'-11"		50'		1'			1		1										GRAU 350 TL-3, SEE DETAIL SHEET 2C-3 & 2C-4
-L-	13+95.70	14+76.95	RT	81.25'				13+95.70	4'-9"	7'-9"		50'		1'			1			1									GRAU 350 TL-3, SEE DETAIL SHEET 2C-3
-L-	13+96.71	14+77.96	LT	81.25'			13+96.71		3'-11"	6'-11"	50'		1'				1		1										GRAU 350 TL-3, SEE DETAIL SHEET 2C-3 & 2C-4
			SUBTOTAL:	325.00'													4		2	2									
		LESS ANCHOR DEDUCTIONS:																											
		SHOP CURVE TYPE III (2 @ 18.75')		-37.50'																									
		TYPE III (2 @ 18.75')		-37.50'																									
		GREU, TL-3 (4 @ 50')		-200.00'																									
			TOTAL:	50.00'													4		2	2									
			SAY:	50.00'													4		2	2									
		ADDITIONAL GUARDRAIL POSTS = 5 EA																											

REVISIONS

8/17/99

7/14/2022
11:56:14 AM
I:\SHP\PROJECTS\R5305_RDY_SUM_03B-1.dgn

COMPUTED BY: CAC	DATE: 7/15/2016
CHECKED BY: ECOLOGICAL ENGINEERING, LLP	DATE: 7/15/2016

PROJECT REFERENCE NO.	SHEET NO.
17BP.3.PE.88	3D-1

NORTH CAROLINA DEPARTMENT OF TRANSPORTATION
DIVISION OF HIGHWAYS

Note: Invert Elevations indicated are for Bid Purposes only and shall not be used for project construction stakeout. See "Standard Specifications For Roads and Structures, Section 300-5".

LIST OF PIPES, ENDWALLS, ETC. (FOR PIPES 48 INCHES & UNDER)

STATION / SIZE / THICKNESS OR GAUGE	LOCATION (LT, RT, OR CL)	STRUCTURE NO. FROM	STRUCTURE NO. TO	TOP ELEVATION	INVERT ELEVATION	INVERT ELEVATION	SLOPE CRITICAL	DRAINAGE PIPE (RCP, CSP, CAAP, HDPE, or PVC) 12"	15"	18"	24"	30"	36"	42"	48"	DO NOT USE RCP	DO NOT USE CSP	DO NOT USE CAAP	DO NOT USE HDPE	C.S. PIPE 12" .064	15" .064	18" .064	24" .064	30" .079	36" .079	42" .109	48" .109	R.C. PIPE CLASS III 12"	15"	18"	24"	30"	36"	42"	48"	R.C. PIPE CLASS IV 12"	15"	18"	24"	30"	36"	42"	48"
14+17 -L-	LT	0401		130.82	128.07																																						
		0401	0402		128.07	127.49			12																																		
SHEET TOTALS									12																																		

STATION	** " R.C. PIPE (CLASS V)	***" RC PIPE CULVERTS, CONTRACTOR DESIGN	***" RC PIPE CULVERTS, CONTRACTOR DESIGN	15" SIDE DRAIN PIPE	18" SIDE DRAIN PIPE	ENDWALLS STD. 838.01 838.11 OR STD. 838.80 (UNLESS NOTED OTHERWISE) CU. YARDS R.C.P.	C.S.P.	QUANTITIES FOR DRAINAGE STRUCTURES PER EACH (0' THRU 5.0')	*TOTAL L.F. FOR PAY QUANTITY SHALL BE COL. "A" + (1.3 X COL. "B") LIN. FT. A 5.0' THRU 10.0'	B 10.0' AND ABOVE	C.B. STD. 840.01 OR STD. 840.02	FRAME, GRATES, AND HOOD STANDARD 840.03 TYPE OF GRATE E	F	G	CONCRETE TRANSITIONAL SECTION DROP INLET	CATCH BASIN	D.I. STD. 840.14 OR STD. 840.15	D.I. FRAME WITH TWO GRATES STD. 840.16	G.D.I. TYPE "A" STD. 840.17 OR 840.26	G.D.I. TYPE "B" STD. 840.18 OR 840.27	G.D.I. TYPE "D" STD. 840.19 OR 840.28	G.D.I. FRAME WITH GRATE STD. 840.20	G.D.I. FRAME WITH TWO GRATES STD. 840.22	G.D.I. (N.S.) FRAME WITH GRATE STD. 840.24	G.D.I. (N.S.) FRAME WITH TWO GRATES STD. 840.24	J.B. STD. 840.31 OR 840.32	G.D.I. (N.S. FLAT) FRAME W/ 2 GRATES STD. 840.29	T.B.D.I. STD. 840.35			DRAINAGE PIPE ELBOWS NO. & SIZE	CONC. & BRICK PIPE PLUG, C.Y. STD. 840.71	CONC. COLLARS CL. "B" C.Y. STD. 840.72	PIPE REMOVAL LIN. FT.	REMARKS
14+17 -L-								1																			1	1							
SHEET TOTALS								1																			1	1							

ABBREVIATIONS

C.B.	CATCH BASIN
N.D.I.	NARROW DROP INLET
D.I.	DROP INLET
G.D.I.	GRATED DROP INLET
G.D.I.(N.S.)	(NARROW SLOT)
J.B.	JUNCTION BOX
M.H.	MANHOLE
T.B.D.I.	TRAFFIC BEARING DROP INLET
T.B.J.B.	TRAFFIC BEARING JUNCTION BOX

REVISIONS

8/17/99

7/11/2022 ...\Proj\B5305_RDY_SUM_03D-1.dgn
...

STATE OF NORTH CAROLINA
DIVISION OF HIGHWAYS

SUMMARY OF SUBSURFACE DRAINAGE

LINE	Station	Station	Location LT/RT/CL	Drain Type* UD/BD/SD	LF
CONTINGENCY				SD	200
				TOTAL LF:	200

*UD = Underdrain
*BD = Blind Drain
*SD = Subsurface Drain

SUMMARY OF BRIDGE WAITING PERIODS

Bridge Description	End Bent/ Bent No.	MONTHS

SUMMARY OF SETTLEMENT GAUGES

Gauge No.	LINE	Approx. Station	Approx. Offset
		TOTAL GAUGES (EACH):	

SUMMARY OF ROCK PLATING

LINE	Beginning Slope	Approx. Station	Ending Slope	Approx. Station	Location LT/RT	Rock Plating Detail No. 1/2/3/4	Riprap Class* 1/2/B	SY
							TOTAL SY:	0

*Use Class 1, 2 or B riprap if riprap class is not shown for rock plating location.

SUMMARY OF EMBANKMENT WAITING PERIODS

LINE	Station	Station	MONTHS

SUMMARY OF SURCHARGES AND SURCHARGE WAITING PERIODS

LINE	Station	Station	Surcharge Height FT	MONTHS

SUMMARY OF REINFORCED SOIL SLOPES (RSS)

LINE	Beginning Slope	Approx. Station	Ending Slope	Approx. Station	Location LT/RT	SY
					TOTAL SY:	0

SUMMARY OF GEOTEXTILE FOR PAVEMENT STABILIZATION

LINE	Station	Station	SY
CONTINGENCY			
		TOTAL SY:	0

SUMMARY OF AGGREGATE SUBGRADE/STABILIZATION

LINE	Station	Station	Aggregate Type ASU/AST	Aggregate Thickness INCHES	Shallow Undercut CY	Class IV Subgrade Stabilization TONS	Geotextile for Soil Stabilization SY	Stabilizer Aggregate TONS	Class IV Aggregate Stabilization TONS
CONTINGENCY			100			190	300		
			TOTAL CY/TONS/SY:		0	190	300*	0	0

ASU = Aggregate Subgrade, AST = Aggregate Stabilization
*Total square yards of Geotextile for Soil Stabilization is only the estimated quantity for ASU/AST and may only represent a portion of the geotextile quantity shown in the Item Sheets of the Proposal.

REVISIONS

8/17/99

7/11/2022
...\Proj\B5305_RDY_SUM_03G-1.dgn
USER: ...

PROJECT REFERENCE NO.	SHEET NO.
17BP.3.PE.88	4

ROADWAY DESIGN ENGINEER
NORTH CAROLINA PROFESSIONAL SEAL 034407 ENGINEER ANDREW P. YOUNG
DocuSigned by: Andrew P. Young EF21D93DD62F4EF... 8/8/2022
STEWART
Firm License No. C-0833 223 S. West St. Suite 1100 Raleigh, NC 27603 T 919.380.8750 www.stewartinc.com

HYDRAULICS ENGINEER
NORTH CAROLINA PROFESSIONAL SEAL 20147 ENGINEER FRANK F. FLEMING
DocuSigned by: Frank Fleming ABD478727EC464... 8/8/2022
vhb
VHB Engineering NC, P.C. (C-3705) 940 Main Campus Drive, Suite 500 Raleigh, NC 27606

DOCUMENT NOT CONSIDERED FINAL UNLESS ALL SIGNATURES COMPLETED

NAD 83/NA 2011

-L-

PI Sta 10+50.38	PI Sta 13+62.95	PI Sta 16+82.92
Δ = 4° 26' 20.4" (LT)	Δ = 23° 14' 38.8" (LT)	Δ = 4° 17' 29.1" (LT)
D = 4° 24' 26.5"	D = 4° 29' 37.6"	D = 3° 18' 17.8"
L = 100.72'	L = 517.25'	L = 129.85'
T = 50.38'	T = 262.23'	T = 64.95'
R = 1,300.00'	R = 1,275.00'	R = 1,733.63'
Runoff = Exist.	Runoff = 100'	Runoff = Exist.
V_D = 55 MPH	S_e = 4%	
	V_D = 55 MPH	

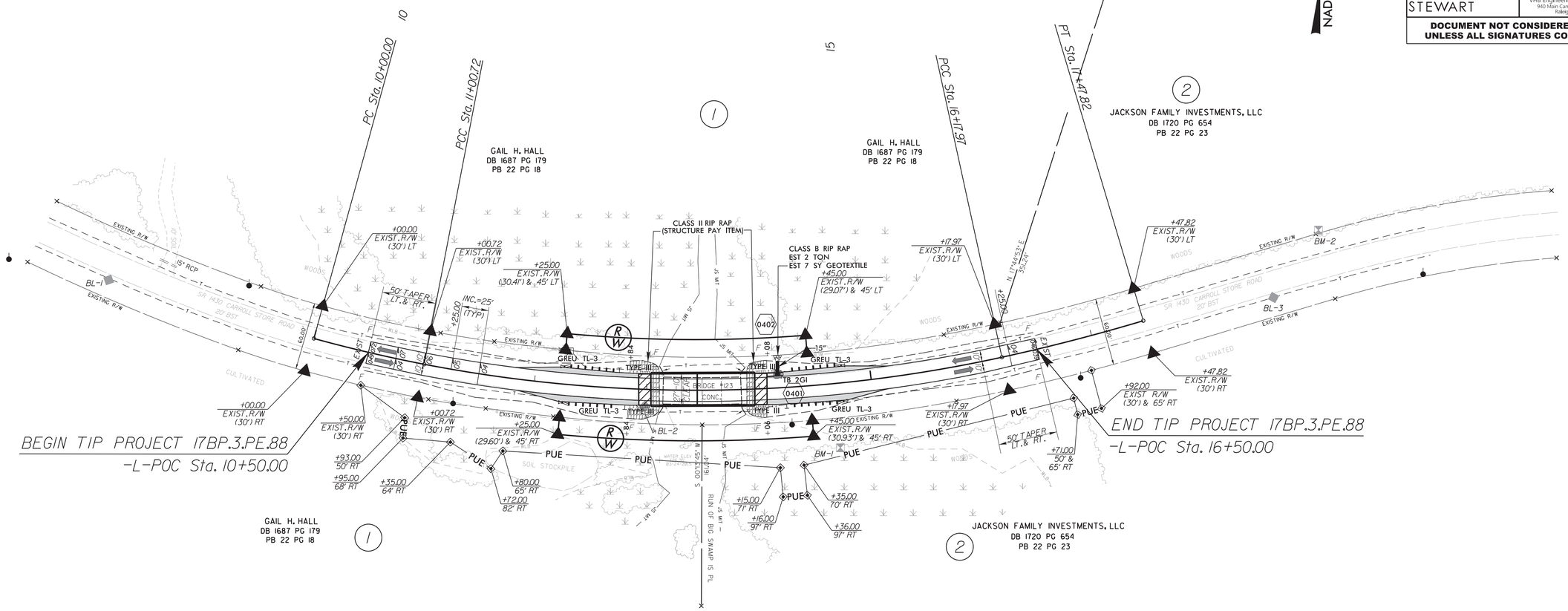

FOR -L- PROFILE, SEE SHEET 5

FOR STRUCTURE PLANS, SEE SHEETS S-1 THRU S-19

REVISIONS

8/17/99

8/2/2022
R:\Roadway\Proj\17BP.3.PE.88_RDY_PSH04.dgn
USER: dhowe

PROJECT REFERENCE NO.	SHEET NO.
17BP.3.PE.88	5

ROADWAY DESIGN ENGINEER

NORTH CAROLINA PROFESSIONAL SEAL 034407 ENGINEER ANDREW P. YOUNG

DocuSigned by: Andrew P. Young EF21D930D62F4EF... 8/8/2022

STEWART

Firm License No. C-0824
223 S. West St.
Suite 1100
Raleigh, NC 27603
T 919.380.8750
www.stewartinc.com

HYDRAULICS ENGINEER

NORTH CAROLINA PROFESSIONAL SEAL 20147 ENGINEER FRANK F. FLEMING

DocuSigned by: Frank Fleming ABD478727EC464... 8/8/2022

vhb

VHB Engineering NC, P.C. (C-3705)
940 Main Campus Drive, Suite 500
Raleigh, NC 27606

DOCUMENT NOT CONSIDERED FINAL UNLESS ALL SIGNATURES COMPLETED

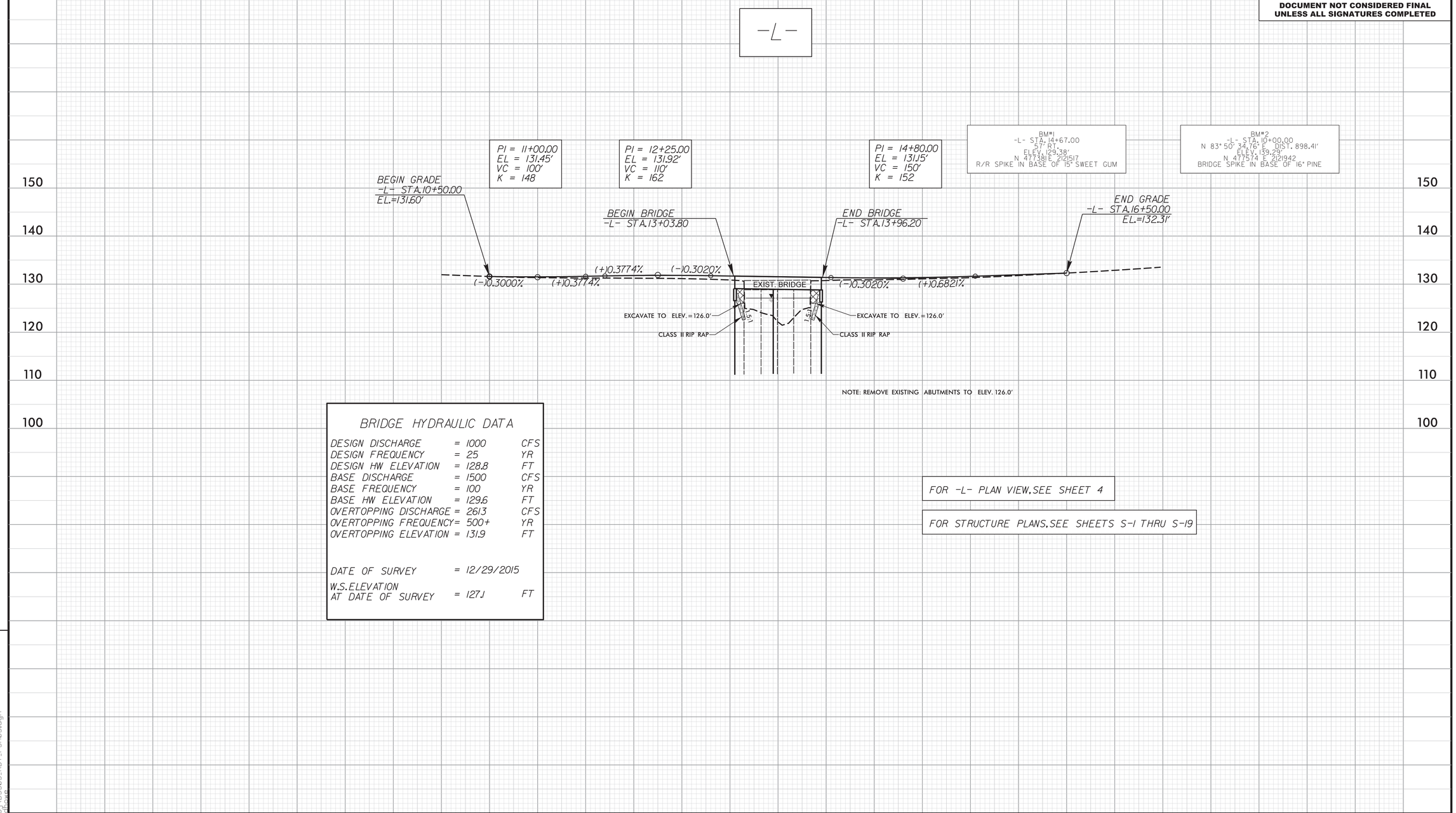

BRIDGE HYDRAULIC DATA

DESIGN DISCHARGE	=	1000	CFS
DESIGN FREQUENCY	=	25	YR
DESIGN HW ELEVATION	=	128.8	FT
BASE DISCHARGE	=	1500	CFS
BASE FREQUENCY	=	100	YR
BASE HW ELEVATION	=	129.6	FT
OVERTOPPING DISCHARGE	=	2613	CFS
OVERTOPPING FREQUENCY	=	500+	YR
OVERTOPPING ELEVATION	=	131.9	FT
DATE OF SURVEY	=	12/29/2015	
W.S. ELEVATION AT DATE OF SURVEY	=	127.1	FT

FOR -L- PLAN VIEW, SEE SHEET 4

FOR STRUCTURE PLANS, SEE SHEETS S-1 THRU S-19

REVISIONS

5/28/99

8/2/2022
17BP.3.PE.88_B5305_RDY_PSH05.dgn
USER: ahowe

STATE	STATE PROJECT REFERENCE NO.	SHEET NO.	TOTAL SHEETS
N.C.	17BP.3.R.88	RW01	5

STATE OF NORTH CAROLINA
DIVISION OF HIGHWAYS

SURVEY CONTROL, EXISTING CENTERLINES, RIGHT OF WAY, EASEMENTS AND PROPERTY TIES

SAMPSON COUNTY

LOCATION: BRIDGE NO. 123 OVER BIG SWAMP ON SR 1430 (CARROLL STORE ROAD)

NAD 83/NA 2011

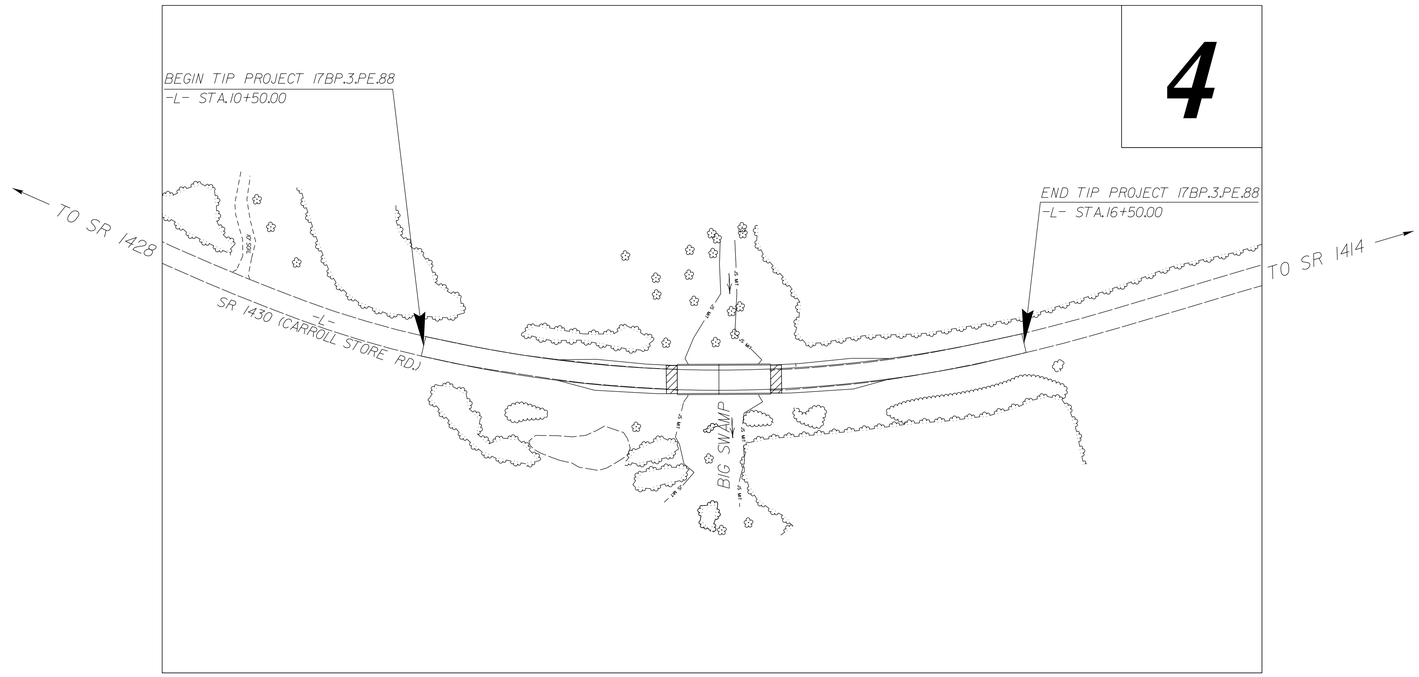

TIP PROJECT: 17BP.3.R.88

09/08/99

29-AUG-2022 12:06
S:\Units\Div03\Projects\BRIDGE\Sampson\B5305_SR1430#123\working\150 series\17BP.3.R.88_LS_RW01_rev_220829.dgn
mjduval AT LS-299896

GRAPHIC SCALE
FOR RW04

50 25 0 50 100
PLANS

DATUM DESCRIPTION

THE LOCALIZED COORDINATE SYSTEM DEVELOPED FOR THIS PROJECT IS BASED ON THE STATE PLANE COORDINATES ESTABLISHED BY NCGS FOR MONUMENT "B5305-2"
WITH NAD 83/NA 2011 STATE PLANE GRID COORDINATES OF
NORTHING: 477501.190(ft) EASTING: 2122574.856(ft)
ELEVATION: 143.041(ft)
THE AVERAGE COMBINED GRID FACTOR USED ON THIS PROJECT (GROUND TO GRID) IS: 0.999876824
THE N.C. LAMBERT GRID BEARING AND LOCALIZED HORIZONTAL GROUND DISTANCE FROM "B5305-2" TO -L- STATION 10+00.00 IS
S 89-07'49.4" W 1526.02(ft)
ALL LINEAR DIMENSIONS ARE LOCALIZED HORIZONTAL DISTANCES
VERTICAL DATUM USED IS NAVD 88

Prepared In the Office of:

LOCATION AND SURVEYS UNIT
DIVISION 3
5310 BARBADOS BLVD, SUITE 102
CASTLE HAYNE, NORTH CAROLINA 28409

2018 STANDARD SPECIFICATIONS

RIGHT OF WAY DATE:	*LETTING DATE:*
APRIL 26, 2017	*SEPTEMBER 29, 2022*

PROFESSIONAL LAND SURVEYOR

NORTH CAROLINA PROFESSIONAL SEAL L-4526 LAND SURVEYOR CHRISTOPHER J. SAWYER

DocuSigned by: 08/29/2022
A2B0F0B0C1D21467

SIGNATURE: *Date:*

STATE OF NORTH CAROLINA DEPARTMENT OF TRANSPORTATION

SURVEY CONTROL SHEET

W/ EXISTING CENTERLINE ALIGNMENTS PRIOR TO CONSTRUCTION

PROJECT REFERENCE NO.	SHEET NO.
17BP.3.R.88	RW02C-1

Location and Surveys

LOCATION AND SURVEYS UNIT
DIVISION 3
5310 BARBADOS BLVD, SUITE 102
CASTLE HAYNE, NORTH CAROLINA 28429

PROJECT SURVEYOR

NORTH CAROLINA PROFESSIONAL SEAL L-4526 LAND SURVEYOR CHRISTOPHER J. SAWYER

DOCUMENT NOT CONSIDERED FINAL UNLESS ALL SIGNATURES COMPLETED

N
NC GRID
NAD 83 NA 2011

POINT	N	E	BEARING	DIST	DELTA	D	L	T	R
PC	477573.152	2120807.352							
CURVE			S 67°19'23.2" E	199.91	06°01'52.1"(LT)	03°00'56.0"	200.00	100.09	1900.00
PCC	477496.080	2120991.806							
CURVE			S 72°29'14.1" E	59.99	04°17'49.9"(LT)	07°09'43.1"	60.00	30.01	800.00
PCC	477478.029	2121049.011							
CURVE			S 77°03'35.6" E	109.97	04°50'53.2"(LT)	04°24'26.5"	110.00	55.03	1300.00
PCC	477453.404	2121156.186							
CURVE			S 81°04'31.8" E	49.99	03°10'59.2"(LT)	06°21'58.3"	50.00	25.01	900.00
PCC	477445.649	2121205.574							
CURVE			S 83°09'29.4" E	60.00	00°58'56.0"(LT)	01°38'13.3"	60.00	30.00	3500.00
PCC	477438.501	2121265.146							
CURVE			N 87°47'34.0" E	349.79	17°06'57.4"(LT)	04°52'30.1"	351.09	176.86	1175.29
PCC	477451.973	2121614.677							
CURVE			N 76°18'44.0" E	176.78	05°50'42.6"(LT)	03°18'17.8"	176.86	88.51	1733.63
PT	477493.805	2121786.440							
LINE			N 73°23'22.6" E	169.11					
PC	477542.148	2121948.494							
CURVE			N 79°33'14.3" E	206.60	12°19'43.4"(RT)	05°57'21.2"	207.00	103.90	962.00
PT	477579.606	2122151.670							

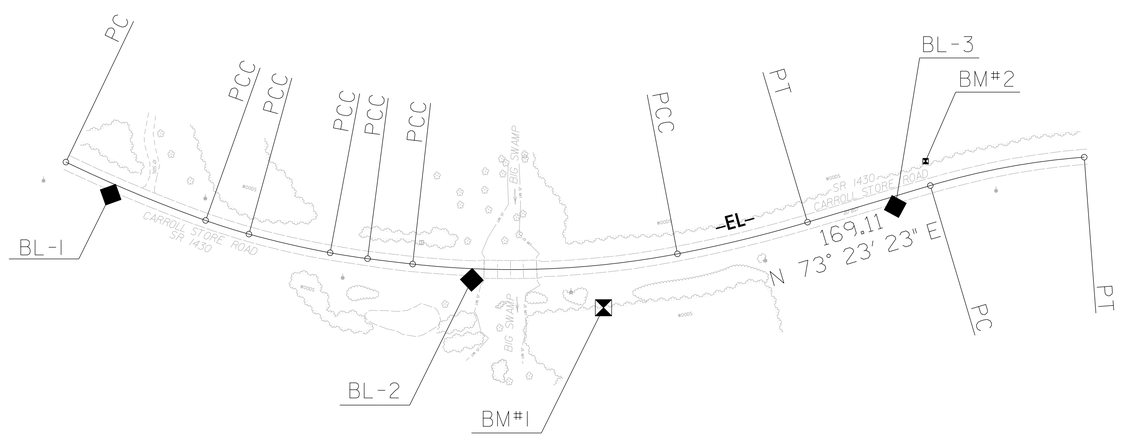

B5305-2

B5305-1

I, Christopher J. Sawyer, PLS, certify that the Project Control was performed under my supervision from an actual GPS survey made under my supervision and the following information was used to perform the survey:

Class of survey: ***AA***
Type of GPS field procedure: RTN
Dates of survey: MARCH 2015
Datum/Epoch: NAD 83/ NA 2011
Published/Fixed-control use: N/A FOR RTN
Localized around: B5305-2
Northing: 477501.190
Easting: 2122574.856
Combined grid factor: 0.999876824
Geoid model: G12NC
Units: Survey Feet

I also certify that the Baseline Control for this project was completed under my direct and responsible charge from an actual survey made under my supervision; that all horizontal closures had a minimum ratio of precision of 1:20,000 (Class AA) and Vertical accuracy to Class A. Field work was performed from MARCH, 2015, and all coordinates are based on NAD 83/2011 and all elevations are based on NAVD 88; that this survey was performed to meet the requirements of 21NCAC 56.1600 as applicable.

This 10TH day of August, 2022.

DocuSigned by:
Christopher J. Sawyer
9200C92E1D274E7...

Professional Land Surveyor L-4526

BL

POINT	DESC.	NORTH	EAST	ELEVATION
BL-1	TRV CAP & REBAR	477530.0021	2120866.4694	133.61
BL-2	TRV CAP & REBAR	477417.5864	2121343.2565	130.90
BL-3	TRV CAP & REBAR	477514.4181	2121902.3031	134.48
B53052	GPS CAP AND REBAR	477501.1900	2122574.8560	143.04
B53051	GPS CAP AND REBAR	477120.3960	2123565.5580	144.09

```
****************************************
BM#1        ELEVATION = 129.38
N 477381       E 2121517
BM#1 RR SPIKE IN BASE OF 15" SWEET GUM
****************************************

****************************************
BM#2        ELEVATION = 139.29
N 477574       E 2121942
BM#2 BRIDGE SPIKE IN BASE OF 16" PINE
****************************************
```

NOTES:

1. PROJECT CONTROL WAS ESTABLISHED USING GNSS, THE GLOBAL NAVIGATION SATELLITE SYSTEM.

2. THE SURVEY CONTROL DATA FOR THIS PROJECT HAS BEEN COMPILED FROM VARIOUS SOURCES. IF FURTHER INFORMATION REGARDING PROJECT CONTROL IS NEEDED, PLEASE CONTACT THE LOCATION AND SURVEYS UNIT.

6/2/99
08-AUG-2022 16:13
S:\Units\Div03\Projects\BRIDGE\Sampson\B5305_SR1430#123\working\150 series\17BP.3.R.88_LS_RW02C-1.dgn
mjduval AT LS-299896

PROPOSED ALIGNMENT CONTROL SHEET

PROJECT REFERENCE NO.	SHEET NO.
17BP.3.R.88	RW02D-1

Location and Surveys

LOCATION AND SURVEYS UNIT
DIVISION 3
5310 BARBADOS BLVD, SUITE 102
CASTLE HAYNE, NORTH CAROLINA 28429

PROJECT SURVEYOR

NORTH CAROLINA PROFESSIONAL SEAL L-4526 LAND SURVEYOR CHRISTOPHER J. SAWYER

DOCUMENT NOT CONSIDERED FINAL UNLESS ALL SIGNATURES COMPLETED

I, Christopher J. Sawyer, PLS, certify that the data compiled came from available surveys/mapping performed by others and provided to me by NCDOT and do not certify to the accuracy or quality of the individual data sources.

This 10TH day of August, 2022.

DocuSigned by:
Christopher J. Sawyer
9700CB2E152F487...

Professional Land Surveyor L-4526

L

TYPE	STATION	NORTH	EAST
PC	10+00.00	477478.0295	2121049.0112
PCC	11+00.72	477455.1310	2121147.0654
PCC	16+17.97	477461.3792	2121660.7375
PT	17+47.82	477493.8055	2121786.4404

NOTES:

1. PROJECT CONTROL WAS ESTABLISHED USING GNSS, THE GLOBAL NAVIGATION SATELLITE SYSTEM.

2. THE PROPOSED ALIGNMENT CONTROL DATA FOR THIS PROJECT HAS BEEN COMPILED FROM VARIOUS SOURCES. IF FURTHER INFORMATION REGARDING PROJECT CONTROL IS NEEDED, PLEASE CONTACT THE LOCATION AND SURVEYS UNIT.

REVISIONS

6/2/99

02-AUG-2022 13:22
S:\Units\Projects\BRIDGE\Sampson\B5305_SR1430*123\working\150 series\17BP.3.R.88_LS_rw02d-1.dgn
mduval AT LS-299896

RIGHT OF WAY CONTROL SHEET

PROJECT REFERENCE NO.	SHEET NO.
17BP.3.R.88	RW03E-1

Location and Surveys

LOCATION AND SURVEYS UNIT
DIVISION 3
5310 BARBADOS BLVD, SUITE 102
CASTLE HAYNE, NORTH CAROLINA 28409

PROJECT SURVEYOR

NORTH CAROLINA PROFESSIONAL SEAL L-4526 LAND SURVEYOR CHRISTOPHER J. SAWYER

DOCUMENT NOT CONSIDERED FINAL UNLESS ALL SIGNATURES COMPLETED

I , Christopher J. Sawyer , certify that the right of way and permanent easement monumentation for this project shown herein was completed under my direct and responsible charge from an actual survey made under my supervision; that all horizontal closures had a minimum ratio of precision of 1:10,000 (Class A). Field work was performed from July 12, 2022, and all coordinates are based on NAD83/2011; That this survey was performed to meet the requirements of 21NCAC 56.1600 as applicable.

This 10TH day of Ausgust, 2022.

DocuSigned by:
Christopher J. Sawyer

Professional Land Surveyor L-4526

ROW MARKER IRON PIN AND CAP-E

ALIGN	STATION	OFFSET	NORTH	EAST
L	10+00.00	-30.00	477506.9573	2121056.9598
L	10+00.00	30.00	477449.1017	2121041.0626
L	11+00.72	-30.00	477484.5873	2121152.7512
L	11+00.72	30.00	477425.6747	2121141.3796
L	12+25.00	45.00	477392.7516	2121265.8611
L	12+25.00	-45.00	477482.3610	2121274.2373
L	12+25.00	-30.41	477467.8342	2121272.8794
L	12+25.00	29.60	477408.0892	2121267.2948
L	14+45.00	-45.00	477480.8922	2121486.2043
L	14+45.00	45.00	477391.1754	2121493.3379
L	14+45.00	30.93	477405.2041	2121492.2225
L	14+45.00	-29.07	477465.0154	2121487.4667
L	16+17.97	30.00	477432.0699	2121667.1381
L	16+17.97	-30.00	477490.6884	2121654.3369
L	17+47.82	30.00	477465.0573	2121795.0163
L	17+47.82	-30.00	477522.5536	2121777.8646

ROW MARKER PERMANENT EASEMENT

ALIGN	STATION	OFFSET	NORTH	EAST	
L	10+50.00	30.00	477436.5001	2121090.6368	
L	10+93.00	50.00	477407.5795	2121129.7245	
L	10+95.00	68.00	477389.5168	2121128.2725	
L	11+35.00	64.00	477385.9434	2121170.3739	
L	11+72.00	82.00	477362.3277	2121206.3791	
L	11+80.00	65.00	477378.0700	2121216.9983	
L	14+15.00	71.00	477363.1185	2121463.8012	
L	14+16.00	97.00	477337.2195	2121466.3260	BRIDGE SPIKE SET IN MAPLE STUMP
L	14+35.00	70.00	477365.4591	2121484.8005	
L	14+36.00	97.00	477338.6054	2121487.8027	
L	16+71.00	50.00	477424.9849	2121724.5246	
L	16+71.00	65.00	477410.4350	2121728.1716	
L	16+92.00	30.00	477449.7043	2121740.3522	
L	16+92.00	65.00	477415.8601	2121749.2726	

NOTES:

1. IF FURTHER INFORMATION REGARDING PROJECT CONTROL IS NEEDED PLEASE CONTACT THE LOCATION AND SURVEYS UNIT.
2. PROJECT CONTROL WAS ESTABLISHED USING GNSS, THE GLOBAL NAVIGATION SATELLITE SYSTEM.
3. RIGHT OF WAY MONUMENTATION ESTABLISHED JULY 12, 2022.

REVISIONS

6/2/99

02-AUG-2022 12:48
S:\Units\Projects\BRIDGE\Sampson\B5305_SR1430*123\working\150 series\17BP.3.R.88_LS_RW03E-1.dgn
mduval A1 LS-29896

PROJECT REFERENCE NO.	SHEET NO.
17BP.3.R.88	RW04

Location and Surveys

LOCATION AND SURVEYS UNIT
DIVISION 3
5310 BARBADOS BLVD, SUITE 102
CASTLE HAYNE, NORTH CAROLINA 28429

PROJECT SURVEYOR

NORTH CAROLINA PROFESSIONAL SEAL L-4526 LAND SURVEYOR CHRISTOPHER J. SAWYER

DOCUMENT NOT CONSIDERED FINAL UNLESS ALL SIGNATURES COMPLETED

I , Christohper J. Sawer, PLS , certify that the right of way and permanent easement monumentation for this project shown herein was completed under my direct and responsible charge from an actual survey made under my supervision; that all horizontal closures had a minimum ratio of precision of 1:10,000 (Class A). Field work was performed from July 12, 2022, and all coordinates are based on NAD83/2011; That this survey was performed to meet the requirements of 21NCAC 56.1600 as applicable.

This 10TH day of August, 2022.

DocuSigned by:
9700CB2E1D21467...

Professional Land Surveyor L-4526

-L-

PI Sta 10+50.38	PI Sta 13+62.95	PI Sta 16+82.92
△ = 4° 26' 20.4" (LT)	△ = 23° 14' 38.8" (LT)	△ = 4° 17' 29.1" (LT)
D = 4° 24' 26.5'	D = 4° 29' 37.6'	D = 3° 18' 17.8"
L = 100.72'	L = 517.25'	L = 129.85'
T = 50.38'	T = 262.23'	T = 64.95'
R = 1,300.00'	R = 1,275.00'	R = 1,733.63'

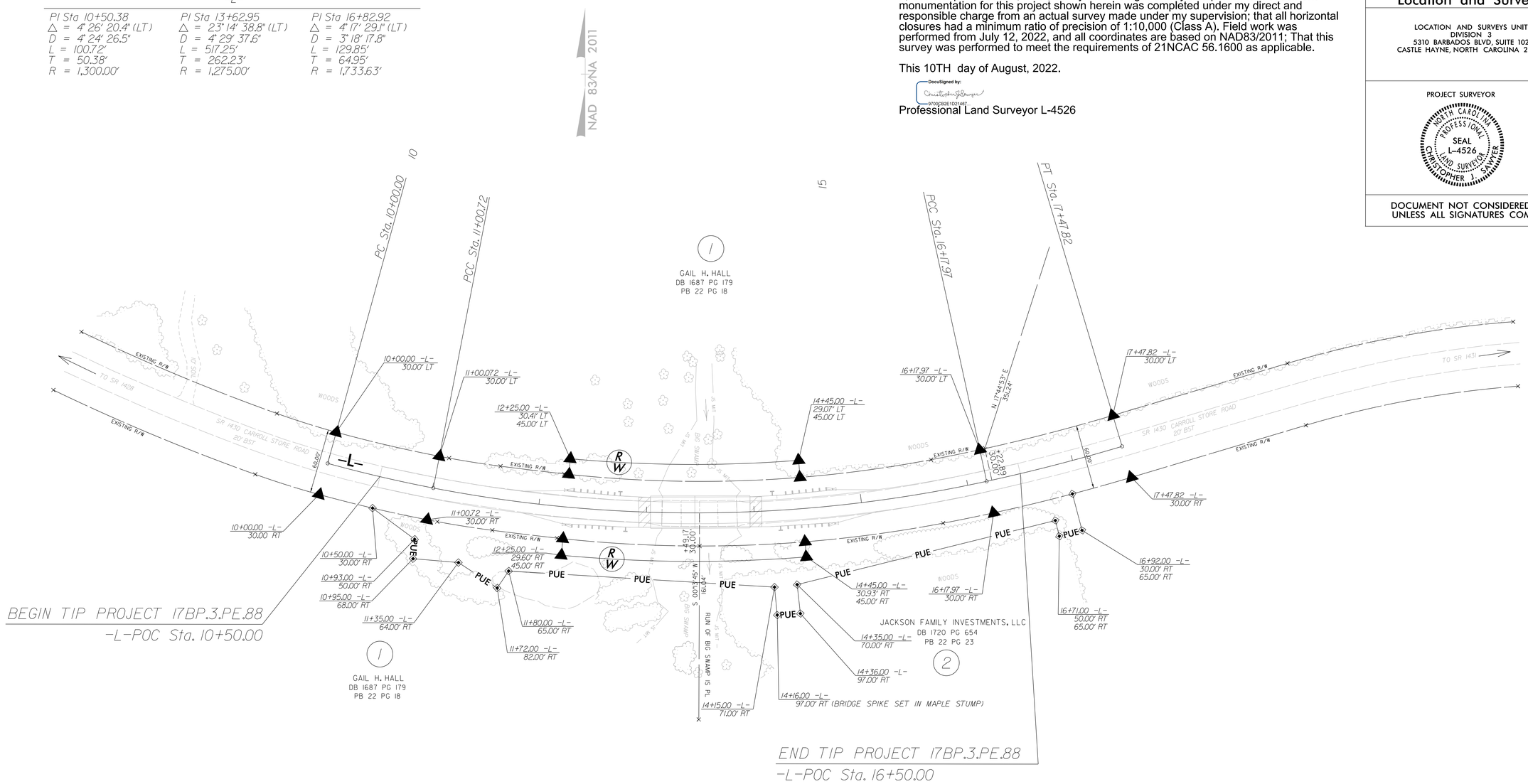

NOTES:

1. IF FURTHER INFORMATION REGARDING PROJECT CONTROL IS NEEDED PLEASE CONTACT THE LOCATION AND SURVEYS UNIT.
2. PROJECT CONTROL WAS ESTABLISHED USING GNSS, THE GLOBAL NAVIGATION SATELLITE SYSTEM.
3. RIGHT OF WAY MONUMENTATION ESTABLISHED JULY 12, 2022.

REVISIONS

6/2/99

02-AUG-2022 5:14
S:\Units\Div03\Projects\BRIDGE\Sampson\B5305_SR1430*123\working\150 series\17BP.3.R.88_LS_RW04.dgn
mjduval ATLS_299896

STATE OF NORTH CAROLINA
DIVISION OF HIGHWAYS

TRANSPORTATION MANAGEMENT PLAN

SAMPSON COUNTY

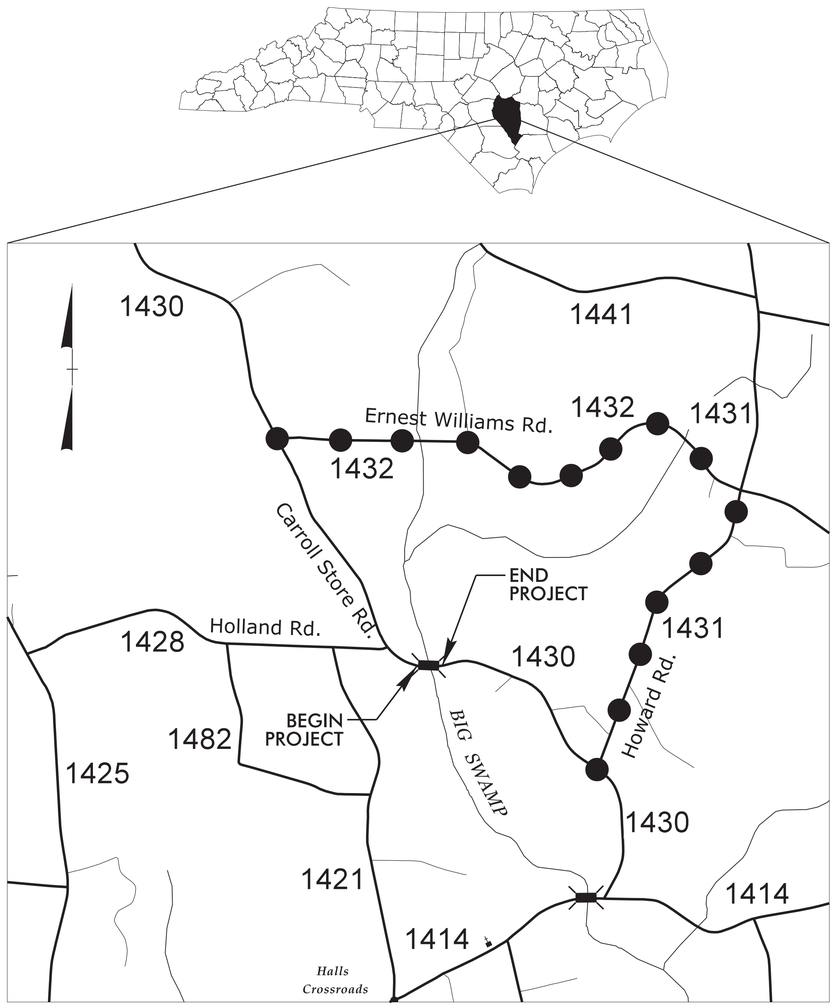

OFF-SITE DETOUR

INDEX OF SHEETS

SHEET NO.	TITLE
TMP-1	TITLE SHEET, VICINITY MAP, AND INDEX OF SHEETS
TMP-1A	LIST OF APPLICABLE ROADWAY STANDARD DRAWINGS, AND LEGEND
TMP-1B	TRANSPORTATION OPERATIONS PLAN: (MANAGEMENT STRATEGIES, GENERAL NOTES, AND PHASING)
TMP-2	SPECIAL SIGN DESIGN
TMP-3	OFF-SITE DETOUR

SHEET NO.
TMP-1

17BP.3.PE.88

TIP PROJECT:

DOCUMENT NOT CONSIDERED FINAL UNLESS ALL SIGNATURES COMPLETED

WORK ZONE SAFETY & MOBILITY
"from the MOUNTAINS to the COAST"

PLANS PREPARED BY:

ANDY YOUNG, PE

JOSHUA ROEMER

NCDOT CONTACTS:

DON PARKER, PE
PROJECT ENGINEER

SPENCER JENNINGS
PROJECT DESIGN ENGINEER

PLANS PREPARED BY:

STEWART
223 S. WEST ST, STE 1100
RALEIGH, NC 27603
T 919.380.8750
Firm License #: C-1051
www.stewartinc.com

APPROVED: DocuSigned by: Andrew P. Young EF21D93DD62F4EF...

DATE: 8/8/2022

SEAL

NORTH CAROLINA PROFESSIONAL SEAL 034407 ENGINEER ANDREW P. YOUNG

8/8/2022
...\TCP\17BP3PE88_TC_TMP_01.dgn
USER:ayoung

PROJ. REFERENCE NO.	SHEET NO.
17BP.3.PE.88	TMP-1A

ROADWAY STANDARD DRAWINGS

THE FOLLOWING ROADWAY STANDARDS AS SHOWN IN "ROADWAY STANDARD DRAWINGS" - N.C. DEPARTMENT OF TRANSPORTATION - RALEIGH, N.C., DATED JANUARY 2018 ARE APPLICABLE TO THIS PROJECT AND BY REFERENCE HEREBY ARE CONSIDERED A PART OF THESE PLANS:

STD. NO.	TITLE
1101.01	WORK ZONE WARNING SIGNS
1101.03	TEMPORARY ROAD CLOSURES
1110.01	STATIONARY WORK ZONE SIGNS
1130.01	DRUMS
1145.01	BARRICADES

LEGEND

GENERAL

- DIRECTION OF TRAFFIC FLOW
- DIRECTION OF PEDESTRIAN TRAFFIC FLOW
- EXIST. PVMT.
- NORTH ARROW
- PROPOSED PVMT.
- TEMP. SHORING (LOCATION PURPOSES ONLY)
- WORK AREA
- REMOVAL

SIGNALS

- EXISTING
- PROPOSED
- TEMPORARY (TEMP)
- PORTABLE (PORT)

PAVEMENT MARKINGS

- EXISTING LINES
- TEMPORARY LINES

TRAFFIC CONTROL DEVICES

- BARRICADE (TYPE III)
- CONE
- DRUM
- SKINNY DRUM
- TUBULAR MARKER
- TEMPORARY CRASH CUSHION
- FLASHING ARROW BOARD
- FLAGGER
- LAW ENFORCEMENT
- TRUCK MOUNTED ATTENUATOR (TMA)
- CHANGEABLE MESSAGE SIGN

TEMPORARY SIGNING

- PORTABLE SIGN
- STATIONARY SIGN
- STATIONARY OR PORTABLE SIGN

PAVEMENT MARKERS

- CRYSTAL/CRYSTAL
- CRYSTAL/RED
- YELLOW/YELLOW

PAVEMENT MARKING SYMBOLS

- PAVEMENT MARKING SYMBOLS

STEWART
Firm License No. C-1051
223 S. West St,
Suite 1100
Raleigh, NC 27603
T 919.380.8750
www.stewartinc.com

APPROVED: DocuSigned by: Andrew P. Young EF21D93DD62F4EF...

DATE: 8/8/2022

SEAL

NORTH CAROLINA PROFESSIONAL SEAL 034407 ENGINEER ANDREW P. YOUNG

DOCUMENT NOT CONSIDERED FINAL UNLESS ALL SIGNATURES COMPLETED

DIVISION OF HIGHWAYS · STATE OF NORTH CAROLINA · DEPARTMENT OF TRANSPORTATION · WORK ZONE TRAFFIC CONTROL

ROADWAY STANDARD DRAWINGS & LEGEND

8/2/2022
...\TCP\17BP.3.PE.88_TC_TMP_01A.dgn
USER:dhowe

PROJ. REFERENCE NO.	SHEET NO.
17BP.3.PE.88	TMP-1B

MANAGEMENT STRATEGIES

DURING CONSTRUCTION OF PROPOSED STRUCTURE BRIDGE No. 123 OVER BIG SWAMP, SR 1430 (CARROLL STORE RD.) WILL BE CLOSED TO THROUGH TRAFFIC. THROUGH TRAFFIC ON SR 1430 (CARROLL STORE RD.) WILL BE MAINTAINED USING AN OFF-SITE DETOUR.

THE OFF-SITE DETOUR WILL INCLUDE SR 1432 (ERNEST WILLIAMS RD.) AND SR 1431 (HOWARD RD.) (SEE SHEET TMP-3).

ACCESS TO ALL RESIDENCES WITHIN THE PROJECT LIMITS MUST BE MAINTAINED AT ALL TIMES.

GENERAL NOTES

CHANGES MAY BE REQUIRED WHEN PHYSICAL DIMENSIONS IN THE DETAIL DRAWINGS, STANDARD DETAILS, AND ROADWAY DETAILS ARE NOT ATTAINABLE TO MEET FIELD CONDITIONS OR RESULT IN DUPLICATE OR UNDESIRED OVERLAPPING OF DEVICES. MODIFICATION MAY INCLUDE: MOVING, SUPPLEMENTING, COVERING, OR REMOVAL OF DEVICES AS DIRECTED BY THE ENGINEER.

THE FOLLOWING GENERAL NOTES APPLY AT ALL TIMES FOR THE DURATION OF THE CONSTRUCTION PROJECT EXCEPT WHEN OTHERWISE NOTED IN THE PLAN OR DIRECTED BY THE ENGINEER.

TRAFFIC PATTERN ALTERATIONS

A) NOTIFY THE ENGINEER THIRTY (30) CALENDAR DAYS PRIOR TO ANY TRAFFIC PATTERN ALTERATION.

SIGNING

B) PROVIDE SIGNING AND DEVICES REQUIRED TO CLOSE THE ROAD ACCORDING TO THE ROADWAY STANDARD DRAWINGS AND TRAFFIC CONTROL PLANS.

PROVIDE SIGNING REQUIRED FOR THE OFF-SITE DETOUR ROUTE AS SHOWN IN THE TRAFFIC CONTROL PLANS.

C) COVER OR REMOVE ALL SIGNS AND DEVICES REQUIRED TO CLOSE THE ROAD WHEN ROAD CLOSURE IS NOT IN OPERATION.

COVER OR REMOVE ALL SIGNS REQUIRED FOR THE OFF-SITE DETOUR WHEN THE DETOUR IS NOT IN OPERATION.

D) ENSURE ALL NECESSARY SIGNING IS IN PLACE PRIOR TO ALTERING ANY TRAFFIC PATTERN.

TRAFFIC CONTROL DEVICES

E) PLACE TYPE III BARRICADES, WITH "ROAD CLOSED" SIGN R11-2 ATTACHED, OF SUFFICIENT LENGTH TO CLOSE ENTIRE ROADWAY.

PHASING

STEP 1:

PROVIDE AND MAINTAIN CHANGEABLE MESSAGE SIGNS AT EACH END OF SR 1430 (CARROLL STORE RD.) FOR FOURTEEN (14) CALENDAR DAYS PRIOR TO ROAD CLOSURE. (SEE SHEET TMP-3).

STEP 2:

USING RSD 1101.03, SHEET 1 OF 9, AND SHEET TMP-3, INSTALL ROAD CLOSURE AND DETOUR SIGNS, PLACE TYPE III BARRICADES TO CLOSE SR 1430 (CARROLL STORE RD.) TO THROUGH TRAFFIC, AND DETOUR TRAFFIC OFF-SITE. REMOVE CHANGEABLE MESSAGE SIGNS ONCE DETOUR IS IN PLACE.

STEP 3:

REMOVE THE EXISTING STRUCTURE.

STEP 4:

CONSTRUCT THE PROPOSED STRUCTURE AND ROADWAY.

STEP 5:

PLACE FINAL PAVEMENT MARKINGS ACCORDING TO THE PAVEMENT MARKING PLANS.

STEP 6:

REMOVE ALL WORK ZONE TRAFFIC CONTROL DEVICES AND OPEN SR 1430 (CARROLL STORE RD.) TO TRAFFIC.

STEWART
Firm License No. C-1051
223 S. West St,
Suite 1100
Raleigh, NC 27603
T 919.380.8750
www.stewartinc.com

APPROVED: DocuSigned by: Andrew P. Young EF21D93DD62F4EF...

DATE: 8/8/2022

SEAL

NORTH CAROLINA PROFESSIONAL SEAL 034407 ENGINEER ANDREW P. YOUNG

DOCUMENT NOT CONSIDERED FINAL UNLESS ALL SIGNATURES COMPLETED

DIVISION OF HIGHWAYS STATE OF NORTH CAROLINA DEPARTMENT OF TRANSPORTATION WORK ZONE TRAFFIC CONTROL

TRANSPORTATION OPERATIONS PLAN

8/2/2022
...\TCP\17BP3PE88_TC_TMP_01B.dgn
USER:dhowe

PROJ. REFERENCE NO.	SHEET NO.
17BP.3.PE.88	TMP-2

SIGN NUMBER: SP-1
TYPE: STATIONARY
QUANTITY: SEE PLANS

SIGN WIDTH: 2′-6″
HEIGHT: 2′-6″
TOTAL AREA: 6.3 Sq.Ft.

BORDER TYPE: INSET
RECESS: 0.47″
WIDTH: 0.63″
RADII: 1.5″

NO. Z BARS:
LENGTH:

BACKG COLOR: Fluorescent Orange
COPY COLOR: Black

SYMBOL	X	Y	WID	HT

MAT′L: 0.080″ (2.0 mm) ALUMINUM

DESIGN BY: Joshua Roemer, EI
PROJECT ID: 17BP.3.PE.88

CHECKED BY: Andy Young, PE
LOCATION: Sampson County

Apr 13, 2022
DIV: 3

USE NOTES: 1,2

1. Legend and border shall be direct applied black non-reflective sheeting.
2. Background shall be NC GRADE B fluorescent orange retroreflective sheeting.

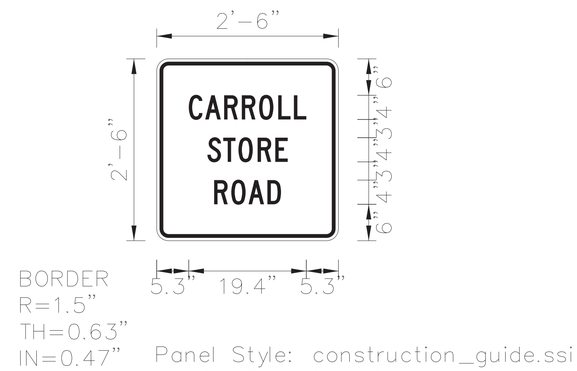

Spacing Factor is 1 unless specified otherwise

LETTER POSITIONS

Letter locations are panel edge to lower left corner

																										Series/Size Text Length
	C	A	R	R	O	L	L																			C 2000
	5.3	8	11.1	14.1	16.9	20.1	22.7																			19.4
	S	T	O	R	E																					C 2000
	8.4	11	13.5	16.7	19.6																					13.2
	R	O	A	D																						C 2000
	9.5	12.3	15.2	18.3																						11

FILENAME: 17BP3PE88_TC_TMP_02

NORTH CAROLINA D.O.T. SIGN DETAIL

STEWART
Firm License No. C-1051
223 S. West St.
Suite 1100
Raleigh, NC 27603
T 919.380.8750
www.stewartinc.com

APPROVED: DocuSigned by: Andrew P. Young EF21D930D62F4EF...
DATE: 8/8/2022
SEAL

NORTH CAROLINA PROFESSIONAL ENGINEER SEAL 034407 ANDREW P. YOUNG

DOCUMENT NOT CONSIDERED FINAL UNLESS ALL SIGNATURES COMPLETED

DIVISION OF HIGHWAYS · STATE OF NORTH CAROLINA · DEPARTMENT OF TRANSPORTATION · WORK ZONE TRAFFIC CONTROL

SPECIAL SIGN DESIGN

8/2/2022
...\TCP\17BP3PE88_TC_TMP_02.dgn
USER:dhowe

PROJ. REFERENCE NO.	SHEET NO.
17BP.3.PE.88	TMP-3

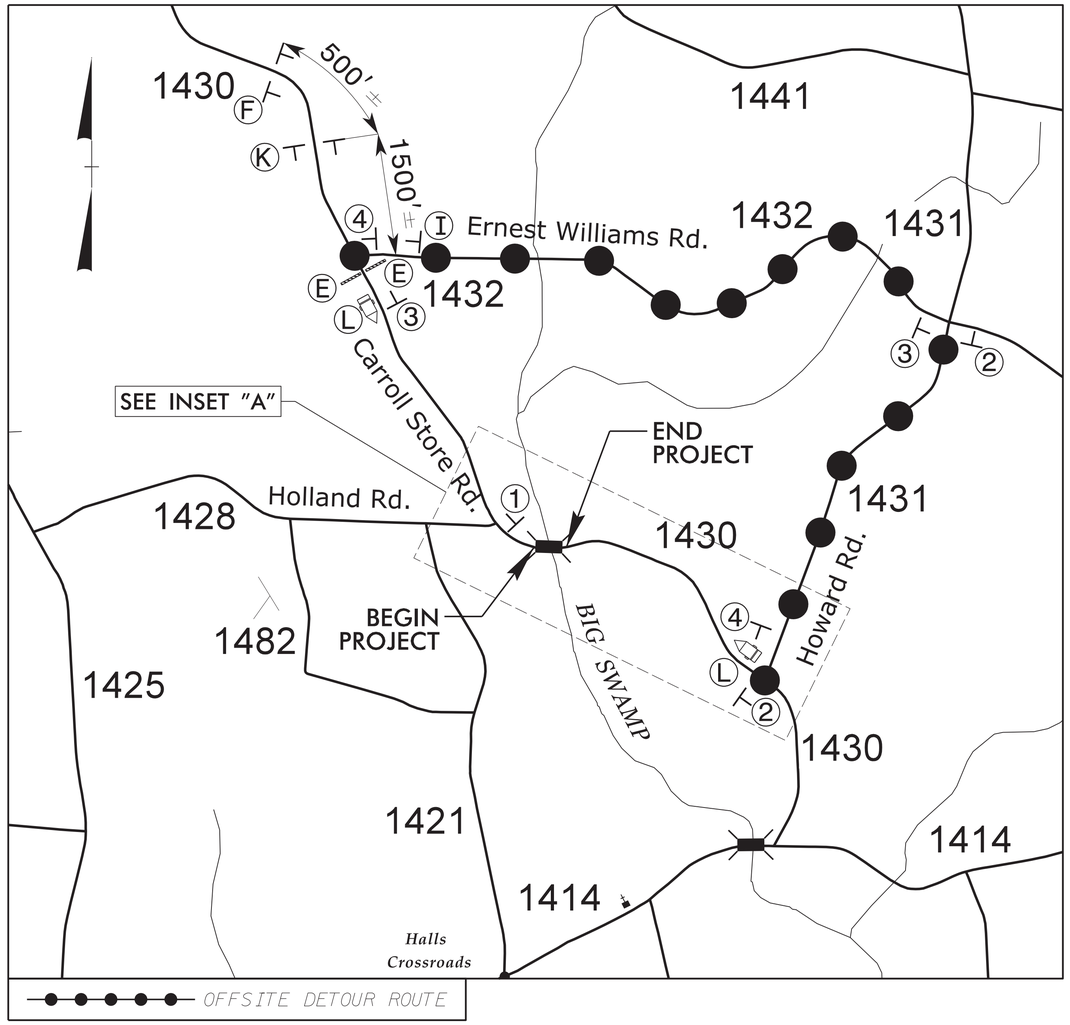

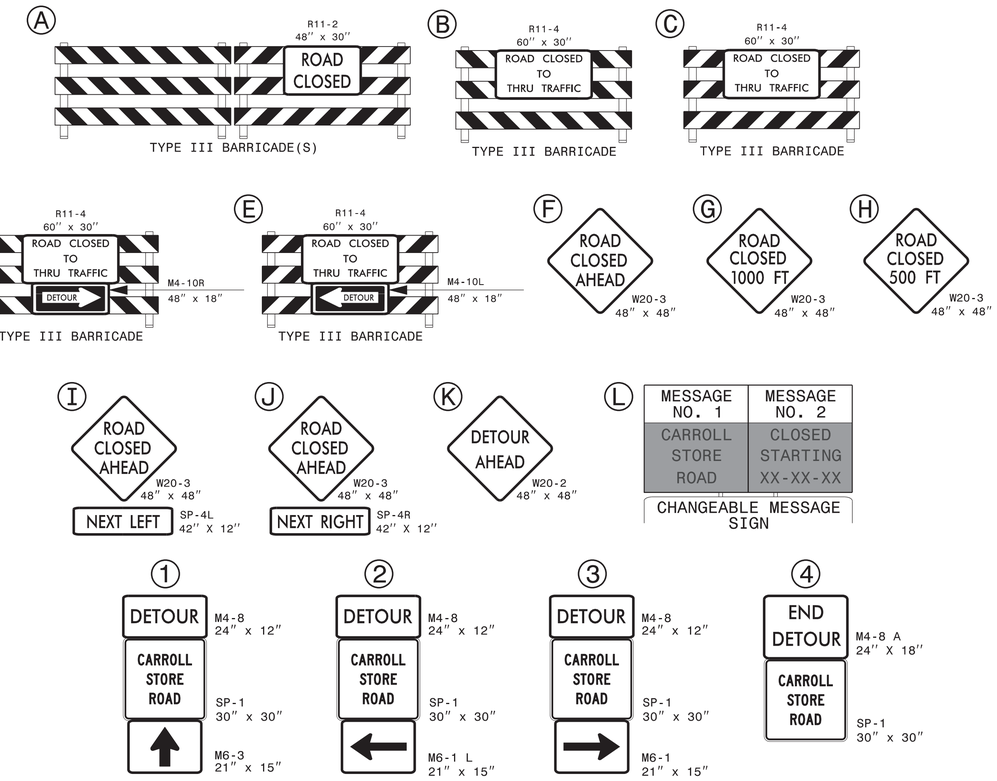

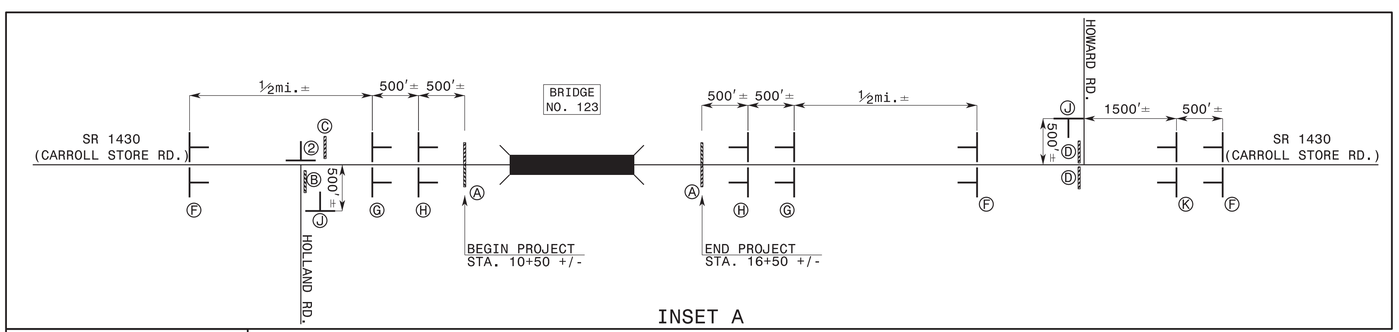

REFER TO ROADWAY STANDARD DRAWING 1101.03, SHEET 1 OF 9 FOR APPLICABLE NOTES.

STEWART
Firm License No. C-1051
223 S. West St,
Suite 1100
Raleigh, NC 27603
T 919.380.8750
www.stewartinc.com

APPROVED: DocuSigned by: Andrew P. Young EF21D93DD62F4EF...

DATE: 8/8/2022

SEAL

NORTH CAROLINA PROFESSIONAL ENGINEER SEAL 034407 ANDREW P. YOUNG

DOCUMENT NOT CONSIDERED FINAL UNLESS ALL SIGNATURES COMPLETED

DIVISION OF HIGHWAYS · STATE OF NORTH CAROLINA · DEPARTMENT OF TRANSPORTATION · WORK ZONE TRAFFIC CONTROL

OFF-SITE DETOUR

8/2/2022
...\TCP\17BP3PE88_TC_TMP_03.dgn
USER:dhowe

T.I.P.: 17BP.3.PE.88

CONTRACT: DC00409

TIP NO.	SHEET NO.
17BP.3.PE.88	PMP-1

APPROVED: DocuSigned by: Andrew P. Young EF21D93DD62F4EF...

DATE: 8/8/2022

SEAL

NORTH CAROLINA PROFESSIONAL SEAL 034407 ENGINEER ANDREW P. YOUNG

DOCUMENT NOT CONSIDERED FINAL UNLESS ALL SIGNATURES COMPLETED

STATE OF NORTH CAROLINA
DEPARTMENT OF TRANSPORTATION

PAVEMENT MARKING PLAN
SAMPSON COUNTY

INDEX

SHEET NO.	DESCRIPTION
PMP-1	INDEX, ROADWAY STANDARD DRAWINGS, GENERAL NOTES, AND PAVEMENT MARKING SCHEDULE
PMP-2	PAVEMENT MARKING DETAILS

ROADWAY STANDARD DRAWING

THE FOLLOWING ROADWAY STANDARDS AS APPEAR IN "ROADWAY STANDARD DRAWINGS" - PROJECT SERVICES UNIT - N.C. DEPARTMENT OF TRANSPORTATION - RALEIGH, N.C., DATED JANUARY 2018 ARE APPLICABLE TO THIS PROJECT AND BY REFERENCE HEREBY ARE CONSIDERED A PART OF THESE PLANS:

STD. NO.	TITLE
1205.01	PAVEMENT MARKINGS - LINE TYPES AND OFFSETS
1205.02	PAVEMENT MARKINGS - TWO-LANE AND MULTILANE ROADWAYS
1205.12	PAVEMENT MARKINGS - BRIDGES
1250.01	RAISED PAVEMENT MARKERS - INSTALLATION SPACING
1253.01	RAISED PAVEMENT MARKERS - SNOWPLOWABLE
1261.01	GUARDRAIL AND BARRIER DELINEATORS - INSTALLATION SPACING
1261.02	GUARDRAIL AND BARRIER DELINEATORS - TYPES AND MOUNTING
1262.01	GUARDRAIL END DELINEATION

GENERAL NOTES

THE FOLLOWING GENERAL NOTES APPLY AT ALL TIMES FOR THE DURATION OF THE CONSTRUCTION PROJECT, EXCEPT WHEN OTHERWISE NOTED IN THE PLAN, OR DIRECTED BY THE ENGINEER.

A) INSTALL PAVEMENT MARKINGS AND PAVEMENT MARKERS ON THE FINAL SURFACE AS FOLLOWS:

ROAD NAME	MARKING	MARKER
-L- SR 1430 (CARROLL STORE RD.)	THERMOPLASTIC	SNOWPLOWABLE
BRIDGE	THERMOPLASTIC	SNOWPLOWABLE

B) TIE PROPOSED PAVEMENT MARKING LINES TO EXISTING PAVEMENT MARKING LINES.

C) REMOVE/REPLACE ANY CONFLICTING/DAMAGED PAVEMENT MARKINGS AND MARKERS.

D) PASSING ZONES WILL BE DETERMINED IN THE FIELD AND MUST BE APPROVED BY THE ENGINEER.

PAVEMENT MARKING SCHEDULE

SYMBOL	DESCRIPTION
T1	THERMOPLASTIC WHITE EDGELINE (4", 90 MIL)
T13	THERMOPLASTIC YELLOW DOUBLE CENTER (4", 90 MIL)

PAVEMENT MARKING SCHEDULE

SNOWPLOWABLE PAVEMENT MARKERS

SYMBOL	DESCRIPTION
ME	YELLOW & YELLOW

PLAN SUBMITTED TO:

AYMAN I. ALQUDWAH, PE — SIGNING AND DELINEATION REGIONAL ENGINEER

DERRICK H. BEARD — SIGNING AND DELINEATION PROJECT DESIGN ENGINEER

STATE OF NORTH CAROLINA DEPARTMENT OF TRANSPORTATION

PLAN PREPARED BY: STEWART

ANDY YOUNG, PE — PROJECT ENGINEER

JOSHUA ROEMER, EI — PROJECT DESIGN ENGINEER

STEWART
Firm License No. C-1051
223 S. West St.
Suite 1100
Raleigh, NC 27603
T 919.380.8750
www.stewartinc.com

8/8/2022
...\17BP3PE88_Sgn_PMP_01.dgn
USER: jroemer

TIP NO.	SHEET NO.
17BP.3.PE.88	PMP-2

APPROVED: DocuSigned by: Andrew P. Young EF21D93DD62F4EF...

DATE: 8/8/2022

SEAL

NORTH CAROLINA PROFESSIONAL SEAL 034407 ENGINEER ANDREW P. YOUNG

DOCUMENT NOT CONSIDERED FINAL UNLESS ALL SIGNATURES COMPLETED

NAD 83/NA 2011

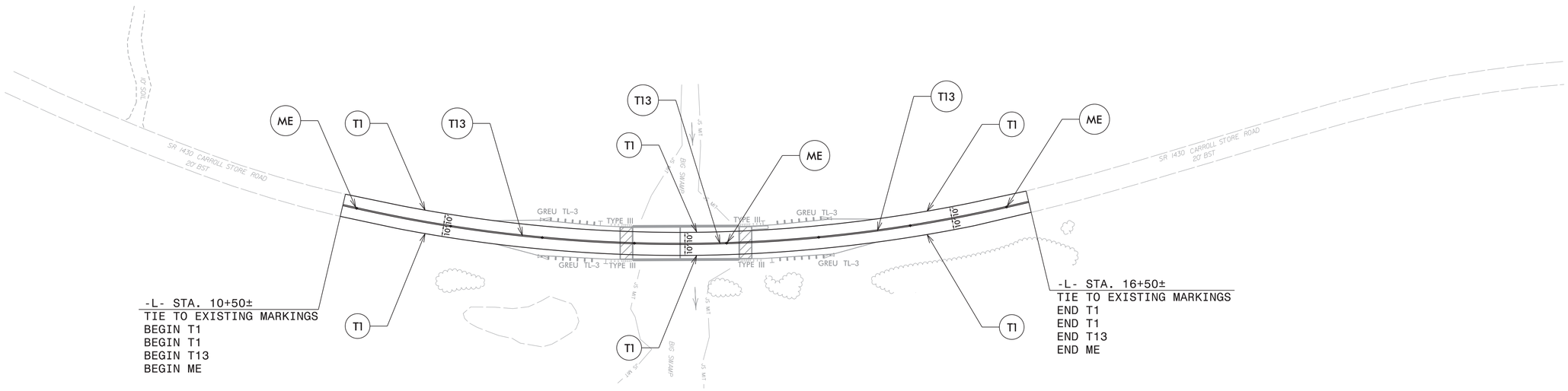

REVISIONS

Firm License No. C-1051
223 S. West St,
Suite 1100
Raleigh, NC 27603
T 919.380.8750
www.stewartinc.com
STEWART

8/8/2022
...\17BP.3.PE.88_Sgn_PMP_02.dgn
USER:jroemer

PAVEMENT MARKING PLANS

TIP PROJECT: 17BP.3.PE.88

STATE OF NORTH CAROLINA
DIVISION OF HIGHWAYS

PLAN FOR PROPOSED
HIGHWAY EROSION CONTROL

SAMPSON COUNTY

LOCATION: ***BRIDGE NO. 123 OVER BIG SWAMP ON SR 1430 (CARROL STORE RD.)***

TYPE OF WORK: ***GRADING, DRAINAGE, PAVING, AND STRUCTURE***

STATE	STATE PROJECT REFERENCE NO.	SHEET NO.	TOTAL SHEETS
N.C.	17BP.3.PE.88	EC-1	

17BP3EC88		EC

NAD 83/NA 2011

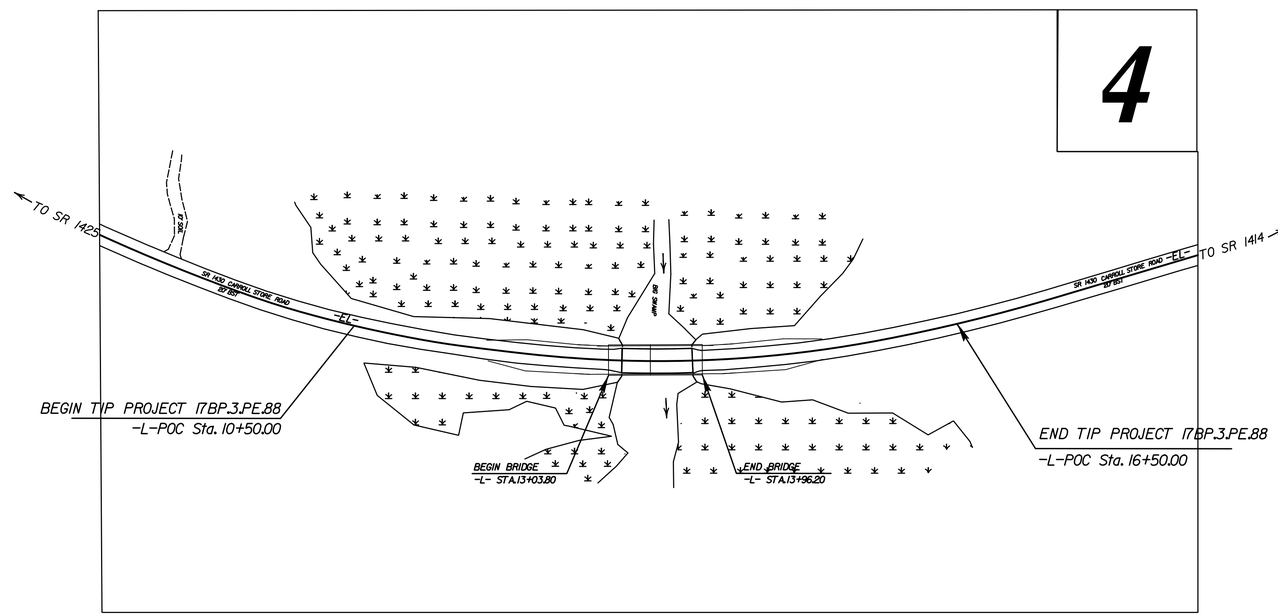

EROSION AND SEDIMENT CONTROL MEASURES

Std. #	Description	Symbol
1630.03	Temporary Silt Ditch	TSD
1630.05	Temporary Diversion	TD
1605.01	Temporary Silt Fence	
1606.01	Special Sediment Control Fence	
1622.01	Temporary Berms and Slope Drains	
1630.02	Silt Basin Type B	
1633.01	Temporary Rock Silt Check Type-A	
	Temporary Rock Silt Check Type-A with Matting and Polyacrylamide (PAM)	
1633.02	Temporary Rock Silt Check Type-B	
	Wattle / Coir Fiber Wattle	CW
	Wattle / Coir Fiber Wattle with Polyacrylamide (PAM)	
1634.01	Temporary Rock Sediment Dam Type-A	
1634.02	Temporary Rock Sediment Dam Type-B	
1635.01	Rock Pipe Inlet Sediment Trap Type-A	
1635.02	Rock Pipe Inlet Sediment Trap Type-B	
1630.04	Stilling Basin	
1630.06	Special Stilling Basin	
	Rock Inlet Sediment Trap:	
1632.01	Type A	A
1632.02	Type B	B
1632.03	Type C	C
	Skimmer Basin	
	Tiered Skimmer Basin	
	Infiltration Basin	

THIS PROJECT CONTAINS EROSION CONTROL PLANS FOR CLEARING AND GRUBBING PHASE OF CONSTRUCTION.

GRAPHIC SCALE

25 0 50
PLANS

25 0 50
PROFILE (HORIZONTAL)

5 0 10
PROFILE (VERTICAL)

THESE EROSION AND SEDIMENT CONTROL PLANS COMPLY WITH THE REGULATIONS SET FORTH BY THE NCG-010000 GENERAL CONSTRUCTION PERMIT EFFECTIVE APRIL 1, 2019 AND ISSUED BY THE NORTH CAROLINA DEPARTMENT OF ENVIRONMENT AND NATURAL RESOURCES DIVISION OF WATER RESOURCES.

Prepared In the Office of:

VHB Engineering NC, P.C. (C-3705)
940 Main Campus Drive, Suite 500
Raleigh, NC 27606

Designed by:

Courtney A. Carpenter, EI ***3811***
NAME *LEVEL III CERTIFICATION NO.*

Reviewed In the Office of:

ROADSIDE ENVIRONMENTAL UNIT
1 South Wilmington St.
Raleigh, NC 27611

2018 STANDARD SPECIFICATIONS

Reviewed by:

Wes Chandler, PE

Roadway Standard Drawings

The following roadway english standards as appear in "Roadway Standard Drawings"– Roadway Design Unit – N. C. Department of Transportation – Raleigh, N. C., dated January 2018 and the latest revison thereto are applicable to this project and by reference hereby are considered a part of these plans.

1604.01	*Railroad Erosion Control Detail*	1632.01	*Rock Inlet Sediment Trap Type A*
1605.01	*Temporary Silt Fence*	1632.02	*Rock Inlet Sediment Trap Type B*
1606.01	*Special Sediment Control Fence*	1632.03	*Rock Inlet Sediment Trap Type C*
1607.01	*Gravel Construction Entrance*	1633.01	*Temporary Rock Silt Check Type A*
1622.01	*Temporary Berms and Slope Drains*	1633.02	*Temporary Rock Silt Check Type B*
1630.01	*Riser Basin*	1634.01	*Temporary Rock Sediment Dam Type A*
1630.02	*Silt Basin Type B*	1634.02	*Temporary Rock Sediment Dam Type B*
1630.03	*Temporary Silt Ditch*	1635.01	*Rock Pipe Inlet Sediment Trap Type A*
1630.04	*Stilling Basin*	1635.02	*Rock Pipe Inlet Sediment Trap Type B*
1630.05	*Temporary Diversion*	1640.01	*Coir Fiber Baffle*
1630.06	*Special Stilling Basin*	1645.01	*Temporary Stream Crossing*
1631.01	*Matting Installation*		

R:\Environmental\Design\B5305_REU_EC_TSH.dgn
8:39:19 AM
mbishop

PROJECT REFERENCE NO.	SHEET NO.
17BP.3.PE.88	EC-2
R/W SHEET NO.	
ROADWAY DESIGN ENGINEER	HYDRAULICS ENGINEER

SILT FENCE COIR FIBER WATTLE BREAK DETAIL

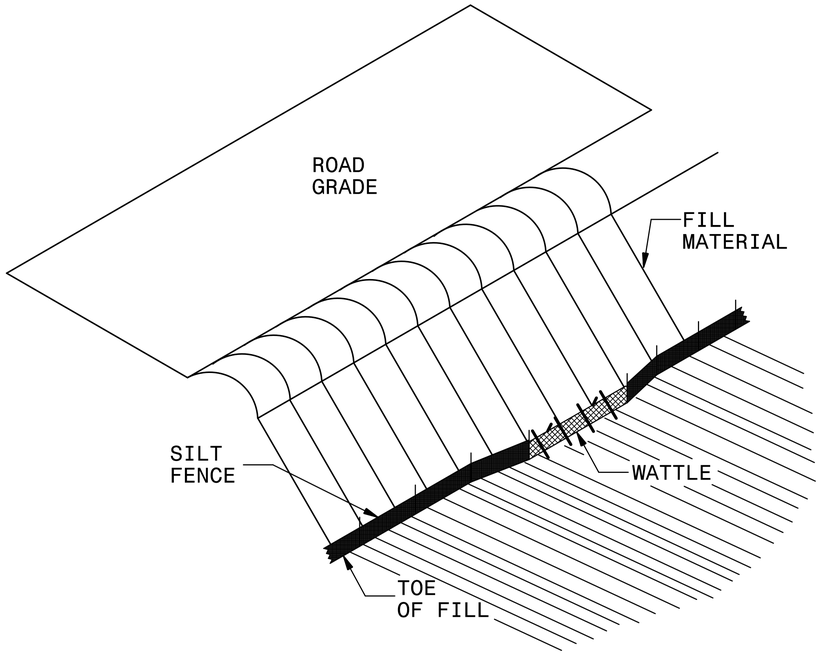

ISOMETRIC VIEW

NOTES:

USE MINIMUM 12 IN. DIAMETER COIR FIBER (COCONUT FIBER) WATTLE AND LENGTH OF 10 FT.

EXCAVATE A 1 TO 2 INCH TRENCH FOR WATTLE TO BE PLACED.

DO NOT PLACE WATTLE ON TOE OF SLOPE.

USE 2 FT. WOODEN STAKES WITH A 2 IN. BY 2 IN. NOMINAL CROSS SECTION.

INSTALL A MINIMUM OF 2 UPSLOPE STAKES AND 4 DOWNSLOPE STAKES AT AN ANGLE TO WEDGE WATTLE TO GROUND.

PROVIDE STAPLES MADE OF 0.125 IN. DIAMETER STEEL WIRE FORMED INTO A U SHAPE NOT LESS THAN 12″ IN LENGTH.

INSTALL STAPLES APPROXIMATELY EVERY 1 LINEAR FOOT ON BOTH SIDES OF WATTLE AND AT EACH END TO SECURE IT TO THE SOIL.

WATTLE INSTALLATION CAN BE ON OUTSIDE OF THE SILT FENCE AS DIRECTED.

INSTALL TEMPORARY SILT FENCE IN ACCORDANCE WITH SECTION 1605 OF THE STANDARD SPECIFICATIONS.

INSET A

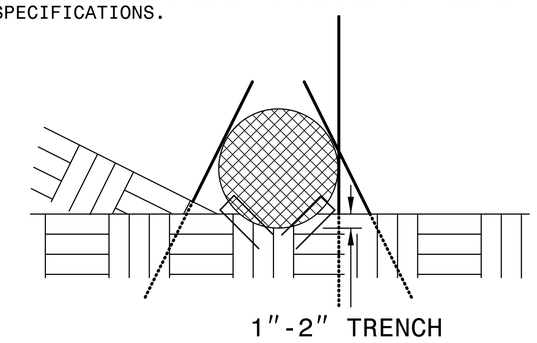

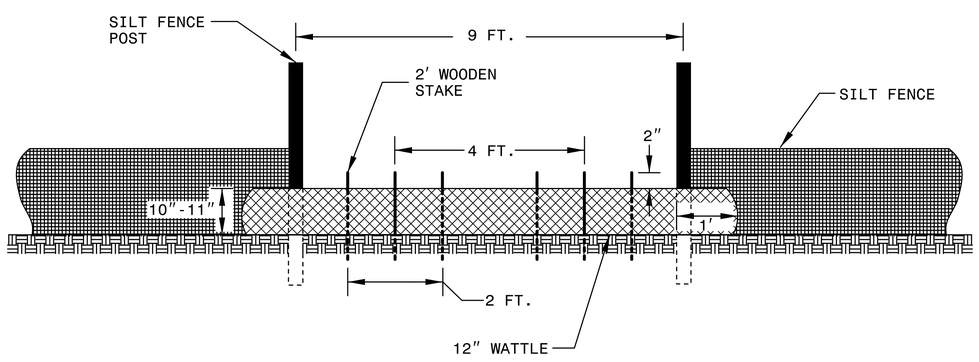

VIEW FROM SLOPE

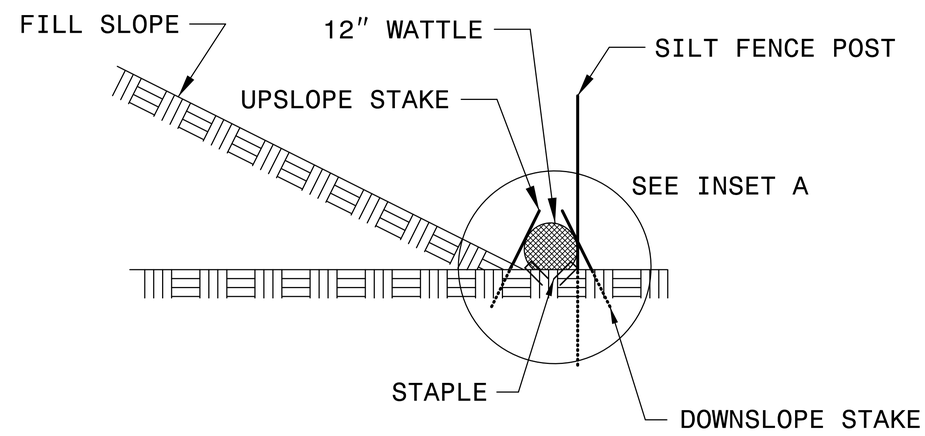

SIDE VIEW

PROJECT REFERENCE NO.	SHEET NO.
17BP.3.PE.88	EC-3
ROADWAY DESIGN ENGINEER	HYDRAULICS ENGINEER

DIVISION OF HIGHWAYS
STATE OF NORTH CAROLINA

SOIL STABILIZATION TIMEFRAMES

SITE DESCRIPTION	STABILIZATION TIME	TIMEFRAME EXCEPTIONS
PERIMETER DIKES, SWALES, DITCHES AND SLOPES	7 DAYS	NONE
HIGH QUALITY WATER (HQW) ZONES	7 DAYS	NONE
SLOPES STEEPER THAN 3:1	7 DAYS	IF SLOPES ARE 10' OR LESS IN LENGTH AND ARE NOT STEEPER THAN 2:1, 14 DAYS ARE ALLOWED.
SLOPES 3:1 OR FLATTER	14 DAYS	7 DAYS FOR SLOPES GREATER THAN 50' IN LENGTH.
ALL OTHER AREAS WITH SLOPES FLATTER THAN 4:1	14 DAYS	NONE, EXCEPT FOR PERIMETERS AND HQW ZONES.

PROJECT REFERENCE NO.	SHEET NO.
17BP.3.PE.88	EC-04/CONST.04
ROADWAY DESIGN ENGINEER	HYDRAULICS ENGINEER

STEWART — Firm License No. C-1051, 421 Fayetteville St., Suite 400, Raleigh, NC 27601, T 919.380.8750, www.stewartinc.com

vhb — VHB Engineering NC, P.C. (C-3705), 940 Main Campus Drive, Suite 500, Raleigh, NC 27606

-L-

PI Sta 10+50.38	PI Sta 13+62.95	PI Sta 16+82.92
Δ = 4° 26′ 20.4″ (LT)	Δ = 23° 14′ 38.8″ (LT)	Δ = 4° 17′ 29.1″ (LT)
D = 4° 24′ 26.5″	D = 4° 29′ 37.6″	D = 3° 18′ 17.8″
L = 100.72′	L = 517.25′	L = 129.85′
T = 50.38′	T = 262.23′	T = 64.95′
R = 1,300.00′	R = 1,275.00′	R = 1,733.63′
Runoff = Ex1st.	Runoff = 100′	Runoff = Ex1st.
V_D = 55 MPH	S_e = 4%	
	V_D = 55 MPH	

CLEARING AND GRUBBING
EROSION CONTROL FOR
CONSTRUCTION SHEET 4

NOTE:
UTILIZE SPECIAL STILLING BASIN(S) AS STILLING BASIN WHERE APPLICABLE.

NOTE:
PLACE TEMPORARY ROCK SEDIMENT DAMS TYPE – B AND TEMPORARY ROCK SILT CHECKS TYPE – A AT DRAINAGE OUTLETS.

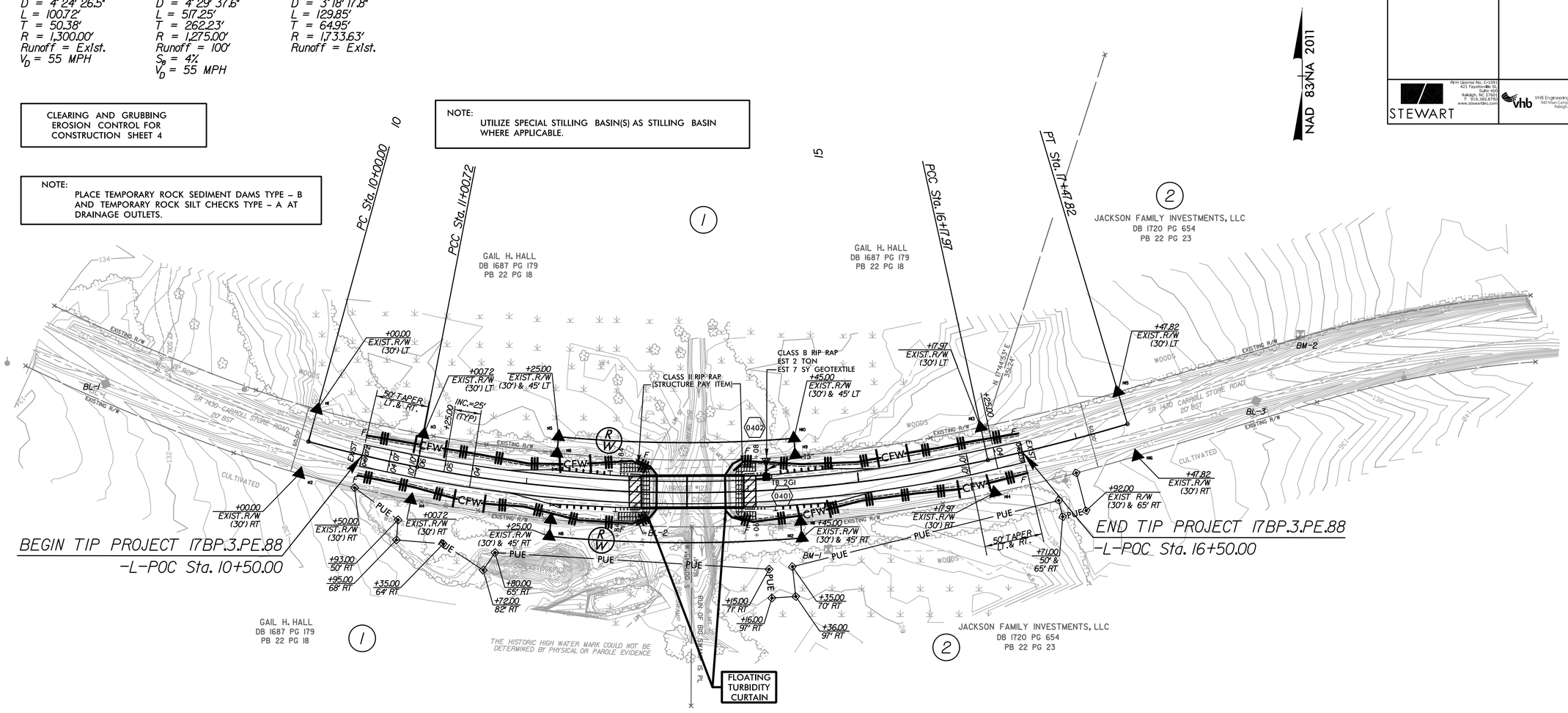

NOTE:
THE OUTISDE BUFFER, WETLAND OR WATER BOUNDARY SHALL BE CLEARLY MARKED BY HIGHLY VISIBLE FENCING (ORANGE SAFETY FENCE)

FOR -L- PROFILE, SEE SHEET 5

FOR STRUCTURE PLANS, SEE SHEETS S-1 THRU S-7

REVISIONS

8/17/99

3:00:42 PM
R:\Hydraulics\Environmental\Design\B5305_REV_EC_PSH04_C3.dgn
chlehut

PROJECT REFERENCE NO.	SHEET NO.
17BP.3.PE.88	EC-05/CONST.04
ROADWAY DESIGN ENGINEER	HYDRAULICS ENGINEER

STEWART — Firm License No. C-1051, 421 Fayetteville St., Suite 400, Raleigh, NC 27601, T 919.380.8750, www.stewartinc.com

vhb — VHB Engineering NC, P.C. (C-3705), 940 Main Campus Drive, Suite 500, Raleigh, NC 27606

8/17/99

REVISIONS

-L-

PI Sta 10+50.38	PI Sta 13+62.95	PI Sta 16+82.92
Δ = 4° 26′ 20.4″ (LT)	Δ = 23° 14′ 38.8″ (LT)	Δ = 4° 17′ 29.1″ (LT)
D = 4° 24′ 26.5″	D = 4° 29′ 37.6″	D = 3° 18′ 17.8″
L = 100.72′	L = 517.25′	L = 129.85′
T = 50.38′	T = 262.23′	T = 64.95′
R = 1,300.00′	R = 1,275.00′	R = 1,733.63′
Runoff = Exist.	Runoff = 100′	Runoff = Exist.
V_D = 55 MPH	S_e = 4%	
	V_D = 55 MPH	

Place Matting for Erosion Control on Slopes Adjacent to Permitted Wetlands as Work Allows.

NOTE:
UTILIZE SPECIAL STILLING BASIN(S) AS STILLING BASIN WHERE APPLICABLE.

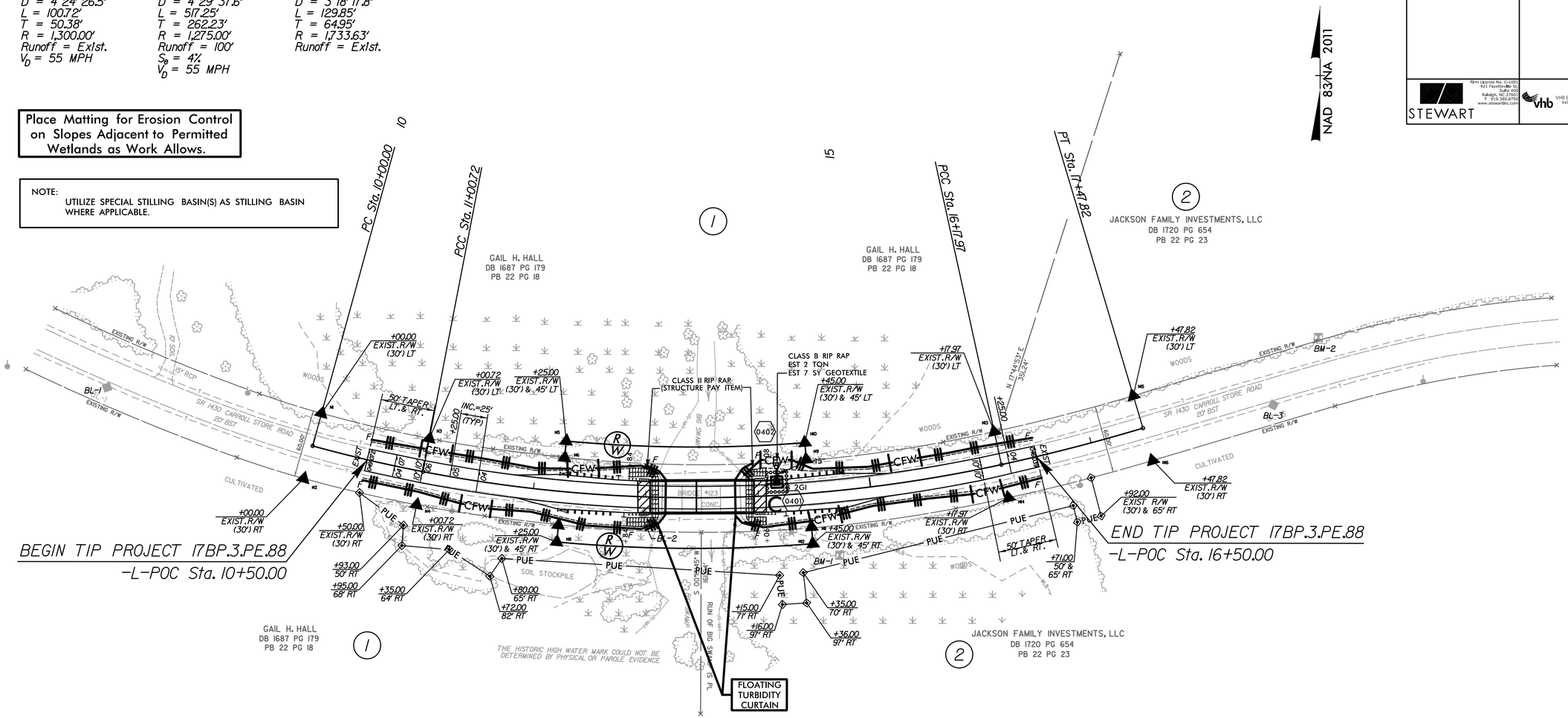

NOTE:
THE OUTISDE BUFFER, WETLAND OR WATER BOUNDARY SHALL BE CLEARLY MARKED BY HIGHLY VISIBLE FENCING (ORANGE SAFETY FENCE)

FOR -L- PROFILE, SEE SHEET 5

FOR STRUCTURE PLANS, SEE SHEETS S-1 THRU S-?

2:05:05 PM
R:\Environmental\Design\B5305_REU_EC_PSH04_Final.dgn
dbishut

09/08/99

TIP PROJECT: 17BP.3.PE.88

CONTRACT: DC00409

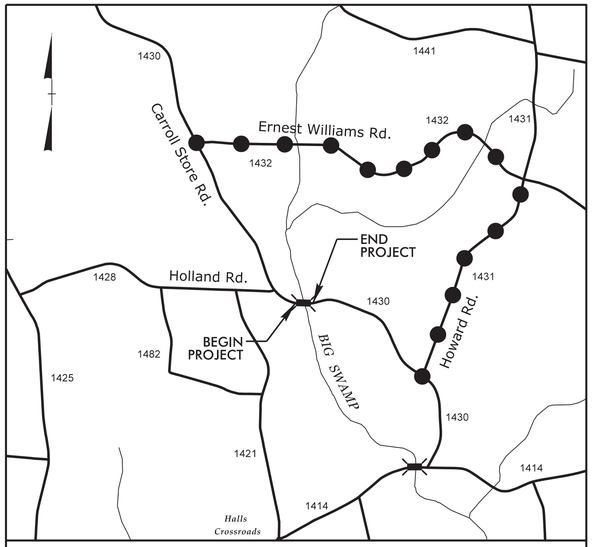

VICINITY MAP

OFF-SITE DETOUR

STATE OF NORTH CAROLINA
DIVISION OF HIGHWAYS

T.I.P. NO.	SHEET NO.
17BP.3.PE.88	UO-1

UTILITIES BY OTHERS PLANS
SAMPSON COUNTY

LOCATION: BRIDGE NO. 123 OVER BIG SWAMP ON SR 1430 (CARROLL STORE RD.)

TYPE OF WORK: TELECOMMUNICATIONS AND POWER RELOCATION

NAD 83/NA 2011

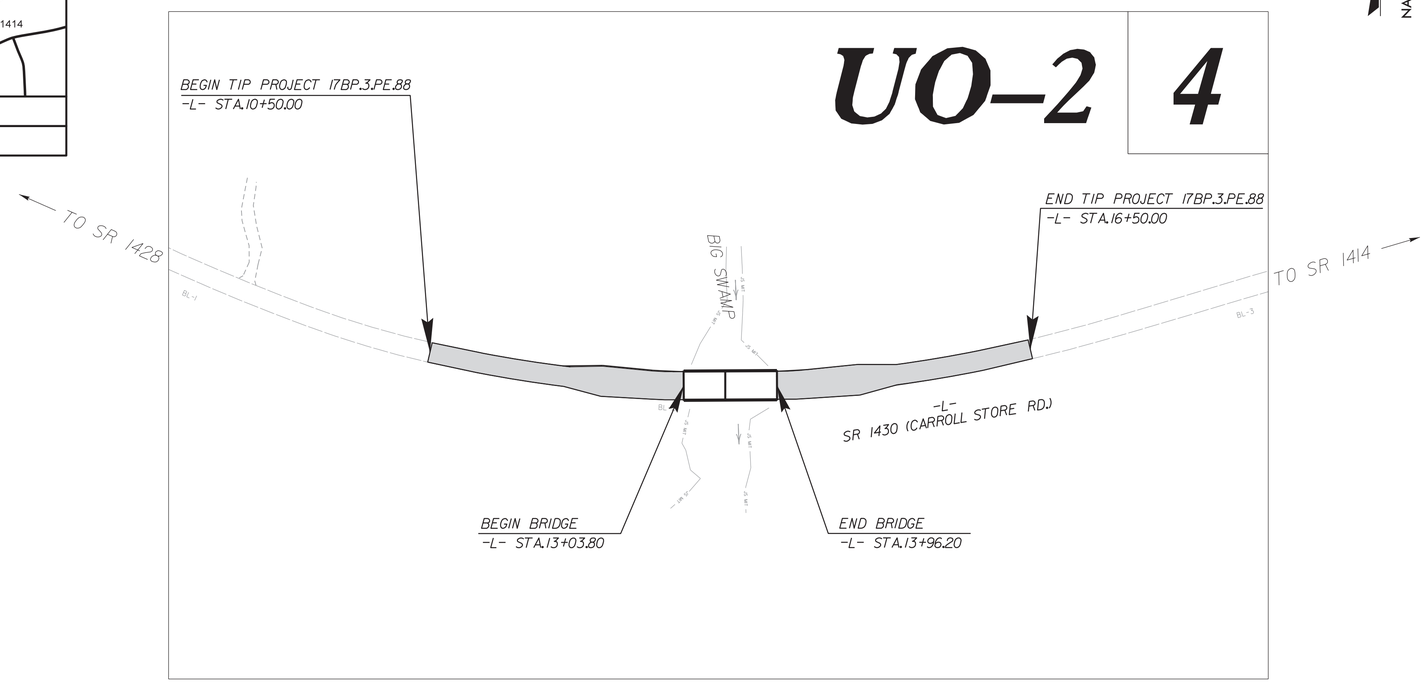

DOCUMENT NOT CONSIDERED FINAL UNLESS ALL SIGNATURES COMPLETED

GRAPHIC SCALES

50 25 0 50 100
PLANS

50 25 0 50 100
PROFILE (HORIZONTAL)

10 5 0 10 20
PROFILE (VERTICAL)

INDEX OF SHEETS

SHEET NO.	DESCRIPTION
UO-1	TITLE SHEET
UO-2	UTILITY BY OTHERS PLAN SHEET

UTILITY OWNERS ON PROJECT

(A) SOUTH RIVER ELECTRIC MEMBERSHIP CORPORATION - POWER

(B) STAR TELEPHONE MEMBERSHIP CORPORATION - TELECOMMUNICATIONS

PREPARED IN THE OFFICE OF:

STEWART
223 S. West St, Suite 1100
RALEIGH, NC 27603
T 919.380.8750
Firm License #: C-1051
www.stewartinc.com
PROJECT #:T18002.00

ANDY YOUNG, PE — PROJECT ENGINEER

JOSHUA ROEMER — PROJECT DESIGN ENGINEER

SEAL

NORTH CAROLINA PROFESSIONAL SEAL 034407 ENGINEER ANDREW P. YOUNG
8/9/2022
DocuSigned by: Andrew P. Young
EF21D93DD60F4EF...

STATE OF NORTH CAROLINA DEPARTMENT OF TRANSPORTATION

DIVISION OF HIGHWAYS
DIVISION 3
5501 BARBADOS BOULEVARD
CASTLE HAYNE NC 28429
PHONE (910) 341-2150
FAX (910) 675-0143

LONNY A. SLEEPER — UTILITIES REGIONAL ENGINEER

ROY (CHRIS) SUTTON — UTILITIES ENGINEER

UTILITIES AREA COORDINATOR

UTILITIES COORDINATOR

8/4/2022
...\UBO\Proj\B5305_UTL_TSH.dgn
USER:dnowe

PROJECT REFERENCE NO.	SHEET NO.
17BP.3.PE.88	U0-2
THIS SHEET CORRESPONDS TO RDY-4	

UTILITIES BY OTHERS

NOTE:
ALL PROPOSED UTILITY WORK SHOWN ON THIS SHEET WILL BE DONE BY OTHERS

NAD 83/NA 2011

Firm License No. C-1051
223 S West St
Suite 1100
Raleigh, NC 27603
T: 919.380.8750
www.stewartinc.com
STEWART

SOUTH RIVER ELECTRIC MEMBERSHIP CORPORATION SHALL TEMPORARILY REMOVE TWO SPANS OF OVERHEAD LINE BEFORE CONSTRUCTION.

CONTRACTOR SHALL CONTACT THE RESIDENT ENGINEER TO COORDINATE WITH SOUTH RIVER ELECTRIC MEMBERSHIP CORPORATION FOUR WEEKS PRIOR TO STARTING CONSTRUCTION TO CONFIRM REMOVAL OF TWO SPANS OF OVERHEAD LINE WILL BE COMPLETE BEFORE CONSTRUCTION MOBILIZATION.

CONTRACTOR SHALL CONTACT THE RESIDENT ENGINEER TO COORDINATE WITH SOUTH RIVER ELECTRIC MEMBERSHIP CORPORATION AFTER CONSTRUCTION TO REPLACE OVERHEAD LINES.

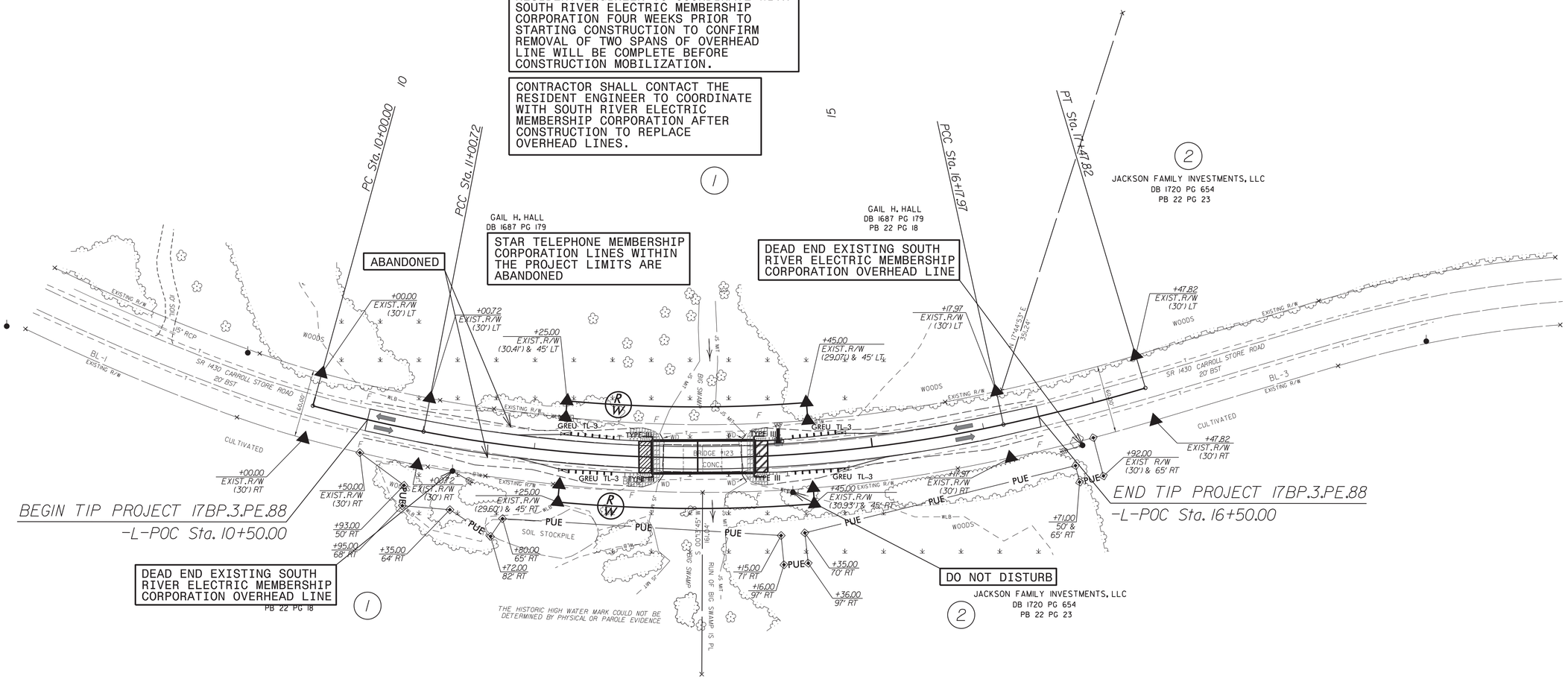

REVISIONS

5/14/99

8/3/2022
17BP.3.PE.88_B5305_UTL_02.dgn
HSE Drawing

CROSS SECTION INDEX OF SHEETS

CROSS SECTION SUMMARY X–1B

–L– X–1 THRU X–4

REVISIONS

8/17/99

7/11/2023
15:55:05 RDY_XPL_X-1A.dgn
USER:hhowe

PROJECT REFERENCE NO.	SHEET NO.
17BP.3.PE.88	X-1B

STATE OF NORTH CAROLINA
DIVISION OF HIGHWAYS

CROSS-SECTION SUMMARY

NOTE: EMBANKMENT COLUMN DOES NOT INCLUDE BACKFILL FOR UNDERCUT

Station L	Uncl. Exc. (cu. yd.)	Embt (cu. yd.)
10+50.00	0	0
11+00.00	2	5
11+50.00	1	10
12+00.00	0	13
12+50.00	0	26
13+00.00	0	61
13+03.80	0	7

Station L	Uncl. Exc. (cu. yd.)	Embt (cu. yd.)
13+96.20	0	0
14+00.00	0	3
14+50.00	3	26
15+00.00	4	10
15+50.00	1	5
16+00.00	1	6
16+50.00	2	6

Approximate quantities only. Unclassified excavation, borrow excavation, fine grading, clearing and grubbing and removal of existing pavement will be paid for at the lump sum price for "Grading".

REVISIONS

8/17/99

7/11/2023
15:55:05 RDY_XPL_X-1B.dgn
usr: Brighows

0 2.5 5	PROJ. REFERENCE NO.	SHEET NO.
	17BP.3.PE.88	X-1

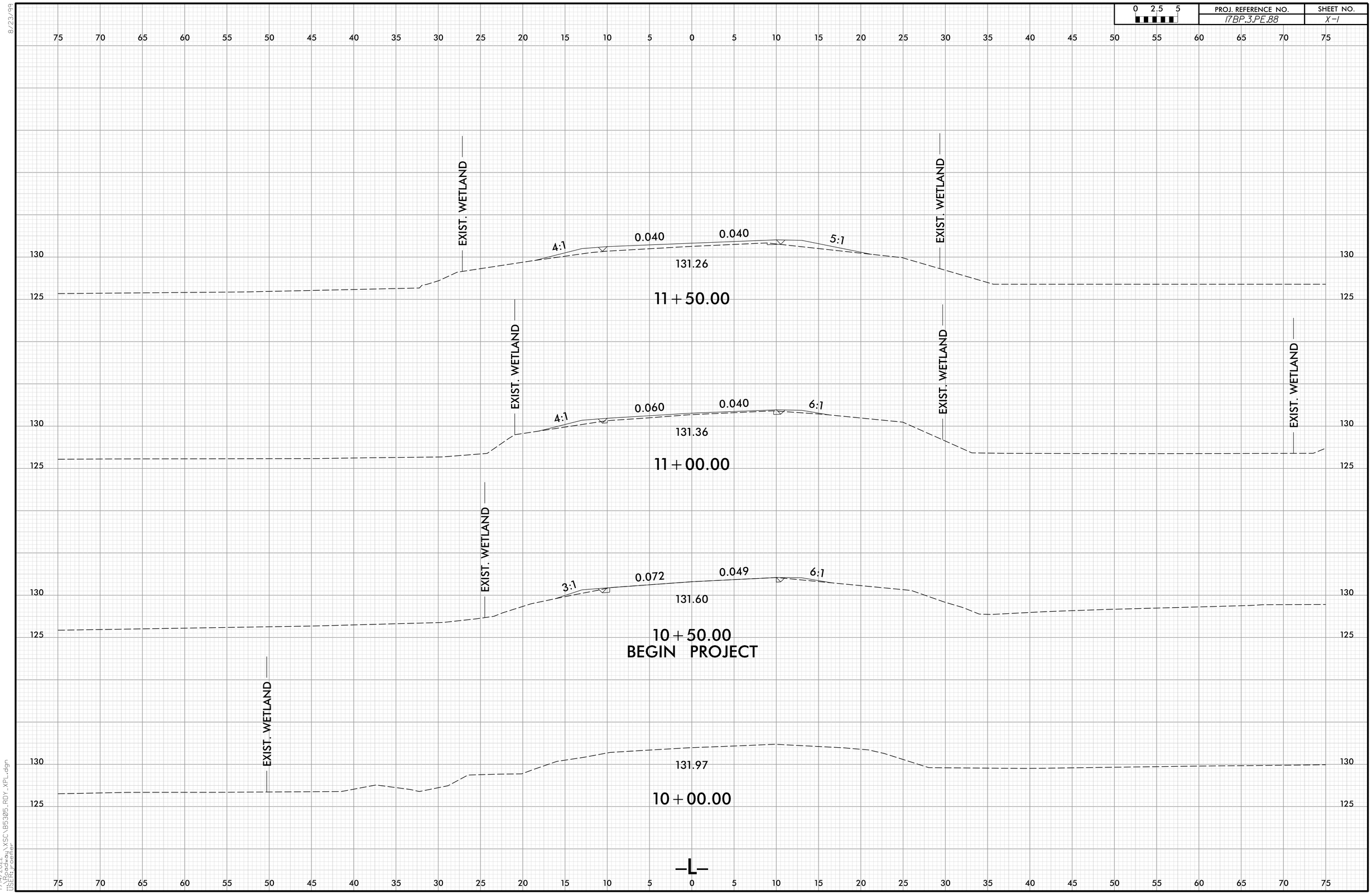

8/23/99

7/14/2022
R:\Roadway\XSC\B5305_RDY_XPL.dgn
USER: jroemer

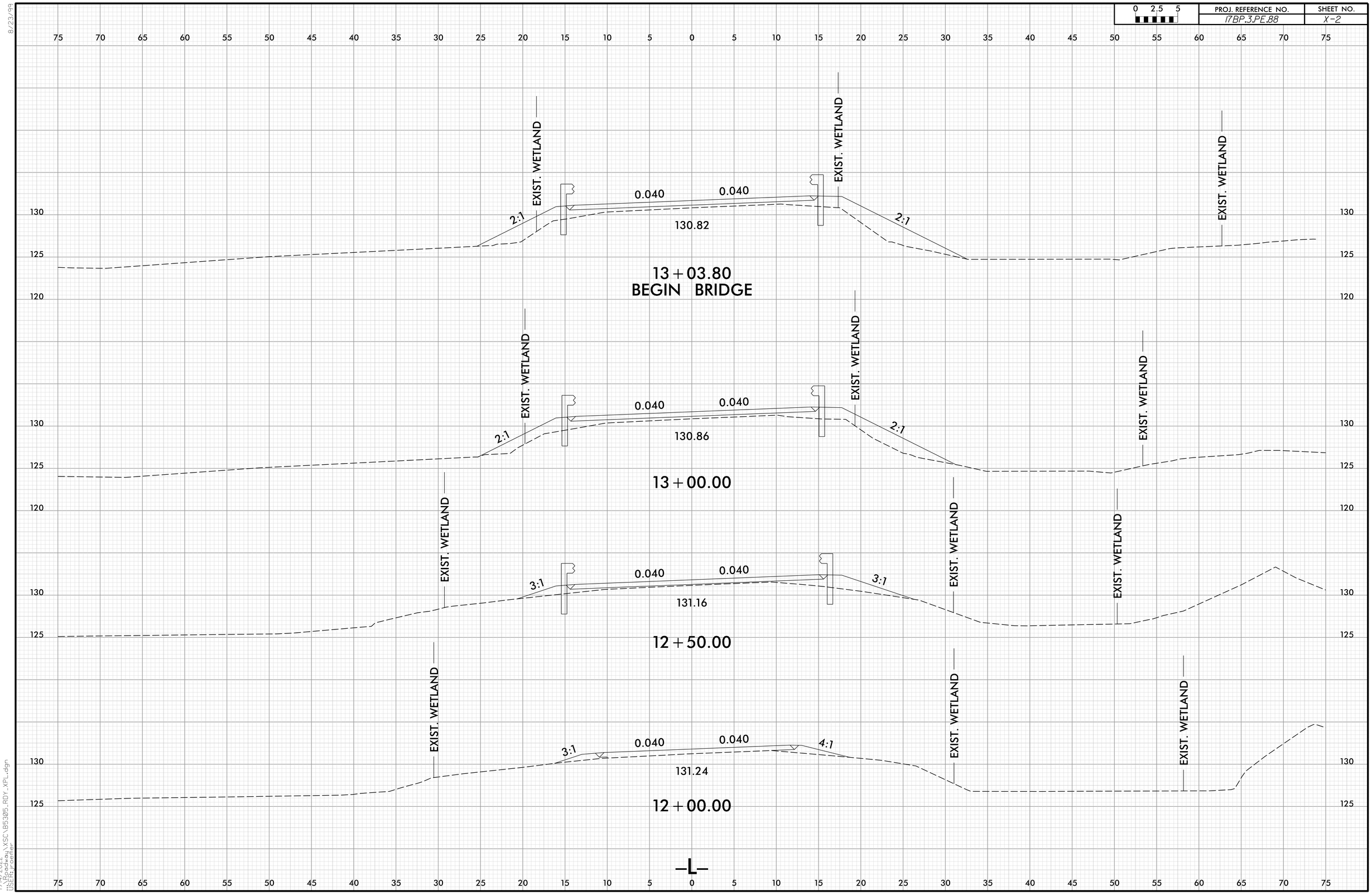

8/23/99

7/14/2022
R:\Roadway\XSC\B5305_RDY_XPL.dgn
USER: jroemer

0 2.5 5	PROJ. REFERENCE NO.	SHEET NO.
	17BP.3.PE.88	X-3

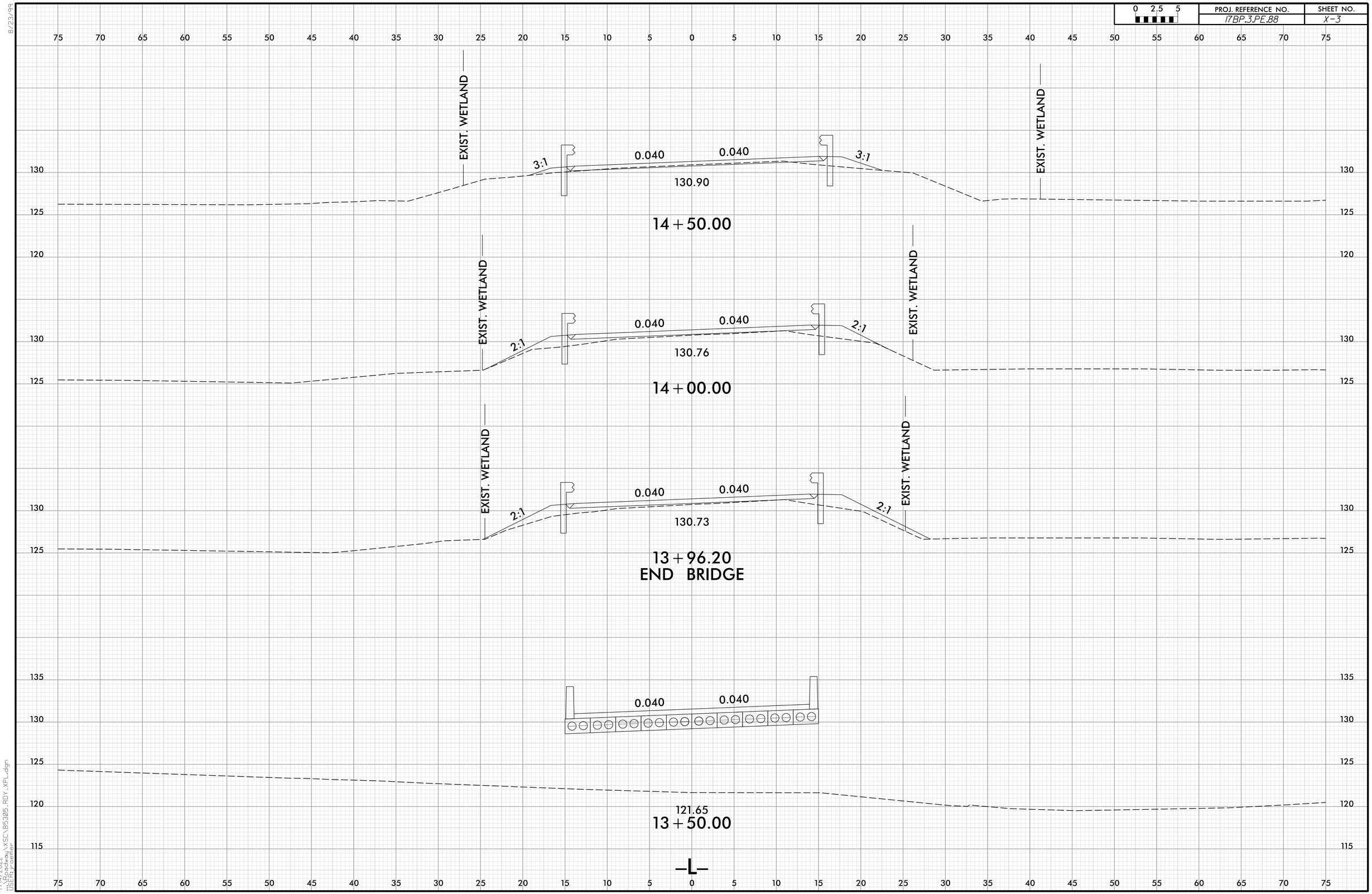

8/23/99

7/14/2022
R:\Roadway\XSC\B5305_RDY_XPL.dgn
USER: rcerner

8/23/99

0 2.5 5	PROJ. REFERENCE NO.	SHEET NO.
	17BP.3.PE.88	X-4

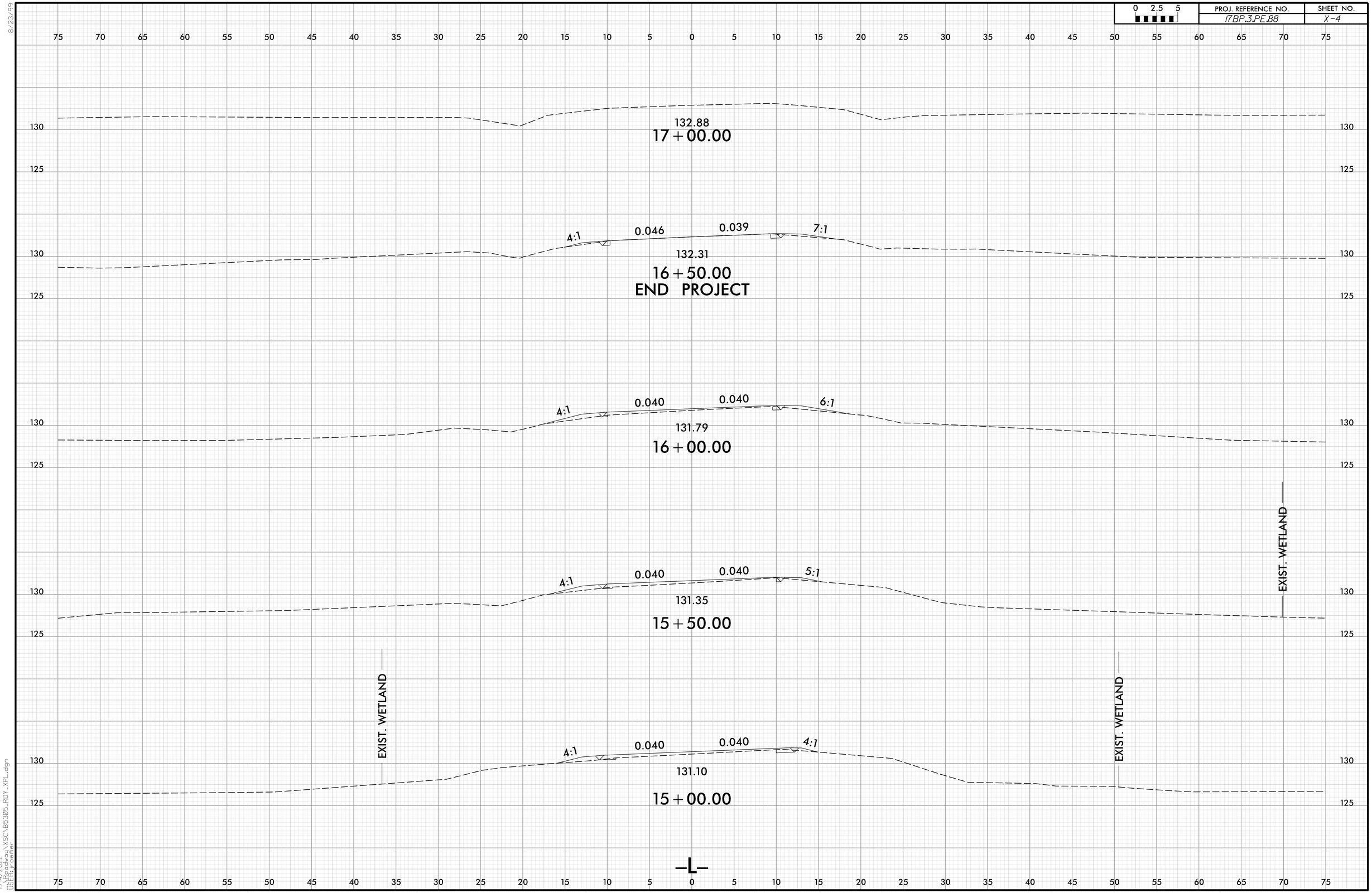

7/14/2022
USER: jroemer

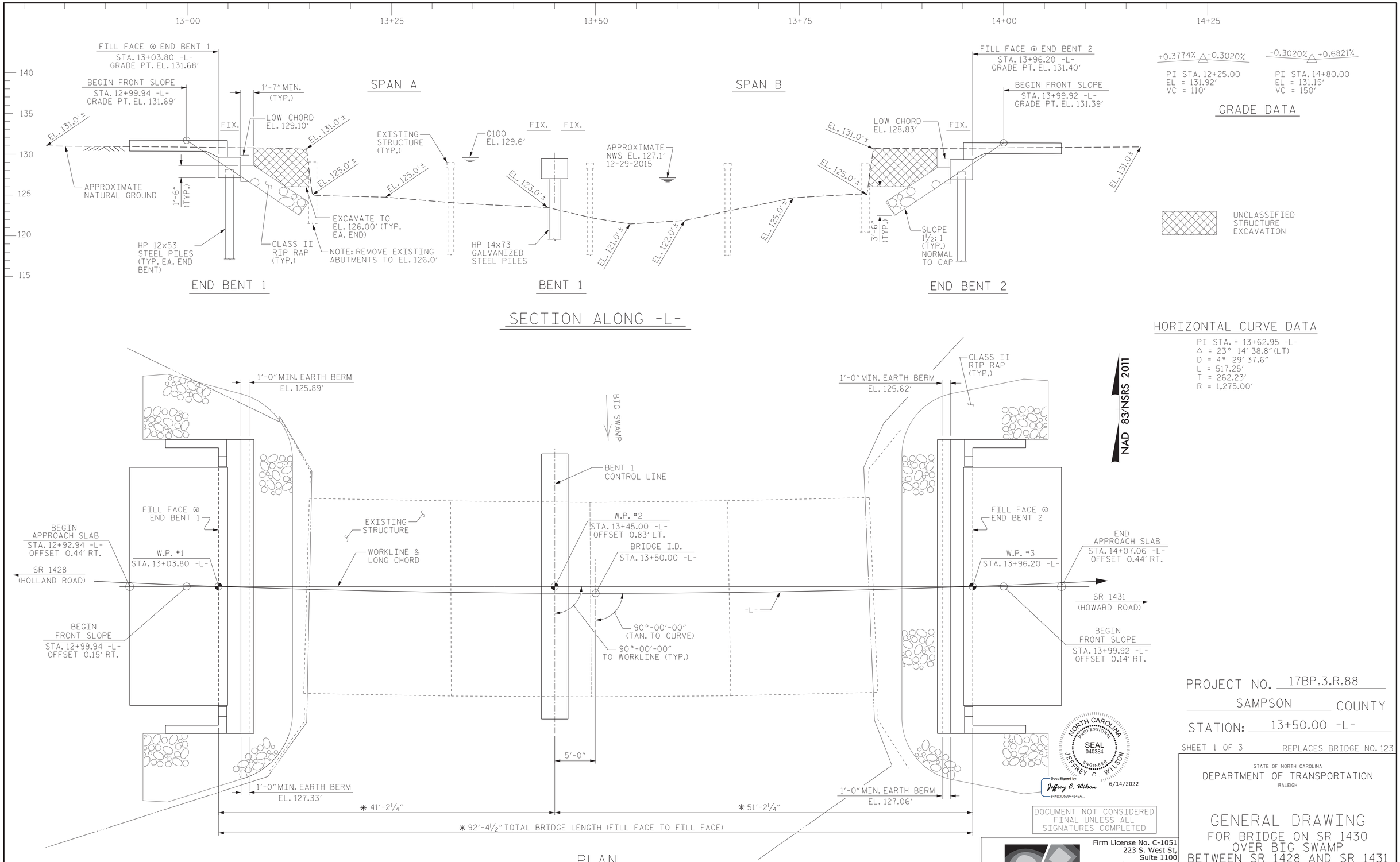

PLAN

(FOR CLARITY, PILES ARE NOT SHOWN IN PLAN VIEW)
* MEASURED ALONG WORKLINE

NORTH CAROLINA PROFESSIONAL SEAL 040384 ENGINEER JEFFREY C. WILSON

DocuSigned by: Jeffrey C. Wilson 844D3D599F4642A... 6/14/2022

DOCUMENT NOT CONSIDERED FINAL UNLESS ALL SIGNATURES COMPLETED

STEWART

Firm License No. C-1051
223 S. West St,
Suite 1100
Raleigh, NC 27603
T 919.380.8750
www.stewartinc.com

PROJECT NO. 17BP.3.R.88

SAMPSON COUNTY

STATION: 13+50.00 -L-

SHEET 1 OF 3 REPLACES BRIDGE NO. 123

STATE OF NORTH CAROLINA
DEPARTMENT OF TRANSPORTATION
RALEIGH

GENERAL DRAWING
FOR BRIDGE ON SR 1430 OVER BIG SWAMP BETWEEN SR 1428 AND SR 1431

REVISIONS						SHEET NO.
NO.	BY:	DATE:	NO.	BY:	DATE:	S-1
1			3			TOTAL SHEETS
2			4			19

DRAWN BY: J. WILSON	DATE : 06-22	
CHECKED BY: D. RUGGLES	DATE : 06-22	
DESIGN ENGINEER OF RECORD: J. WILSON	DATE : 06-22	

6/14/2022
...\17BP.3.R.88_SMU_GD1_810123.dgn
USER:jwilson

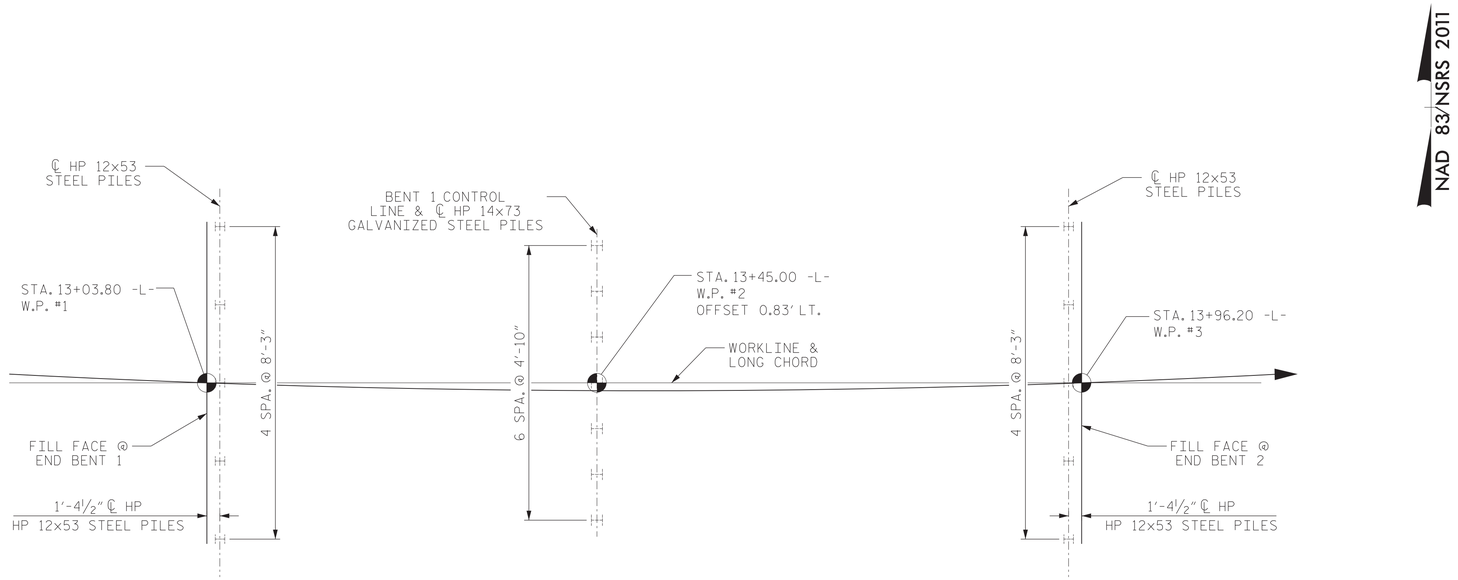

FOUNDATION LAYOUT

DIMENSIONS LOCATING PILES ARE SHOWN TO CENTERLINE OF PILES

FOUNDATION NOTES

1) FOR PILES, SEE GEOTECHNICAL SPECIAL PROVISIONS AND SECTION 450 OF THE STANDARD SPECIFICATIONS.

2) PILES AT END BENT 1 ARE DESIGNED FOR A FACTORED RESISTANCE OF 70 TONS PER PILE.

3) PILES AT BENT 1 ARE DESIGNED FOR A FACTORED RESISTANCE OF 100 TONS PER PILE.

4) PILES AT END BENT 2 ARE DESIGNED FOR A FACTORED RESISTANCE OF 85 TONS PER PILE

5) DRIVE PILES AT END BENT 1 TO A REQUIRED DRIVING RESISTANCE OF 120 TONS PER PILE.

6) DRIVE PILES AT BENT 1 TO A REQUIRED DRIVING RESISTANCE OF 170 TONS PER PILE. THIS REQUIRED DRIVING RESISTANCE INCLUDES ADDITIONAL RESISTANCE FOR SCOUR.

7) DRIVE PILES AT END BENT 2 TO A REQUIRED DRIVING RESISTANCE OF 145 TONS PER PILE.

8) INSTALL PILES AT BENT 1 TO A TIP ELEVATION NO HIGHER THAN 98 FT.

9) THE SCOUR CRITICAL ELEVATION FOR BENT 1 IS ELEVATION 115 FT. SCOUR CRITICAL ELEVATIONS ARE USED TO MONITOR POSSIBLE SCOUR PROBLEMS DURING THE LIFE OF THE STRUCTURE.

10) TESTING PILES WITH THE PDA DURING DRIVING, RESTRIKING OR REDRIVING MAY BE REQUIRED. THE ENGINEER WILL DETERMINE THE NEED FOR PDA TESTING. FOR PDA TESTING, SEE SECTION 450 OF THE STANDARD SPECIFICATIONS.

NORTH CAROLINA PROFESSIONAL SEAL 040384 ENGINEER JEFFREY C. WILSON

DocuSigned by: Jeffrey C. Wilson 844D3D599F4642A...

6/14/2022

DOCUMENT NOT CONSIDERED FINAL UNLESS ALL SIGNATURES COMPLETED

STEWART

Firm License No. C-1051
223 S. West St,
Suite 1100
Raleigh, NC 27603
T 919.380.8750
www.stewartinc.com

PROJECT NO. 17BP.3.R.88

SAMPSON COUNTY

STATION: 13+50.00 -L-

SHEET 2 OF 3

STATE OF NORTH CAROLINA
DEPARTMENT OF TRANSPORTATION
RALEIGH

GENERAL DRAWING
FOR BRIDGE ON SR 1430
OVER BIG SWAMP
BETWEEN SR 1428 AND SR 1431

REVISIONS						SHEET NO.
NO.	BY:	DATE:	NO.	BY:	DATE:	S-2
1			3			TOTAL SHEETS
2			4			19

DRAWN BY:	J. WILSON	DATE :	06-22
CHECKED BY:	D. RUGGLES	DATE :	06-22
DESIGN ENGINEER OF RECORD:	J. WILSON	DATE :	06-22

6/14/2022
...\17BP.3.R.88_SMU_FL_810123.dgn
USER:jwilson

BENCH MARK #1: RR SPIKE IN BASE OF 15" SWEET GUM, 57' RIGHT OF STA. 14+67.00 -L-, EL. 129.38

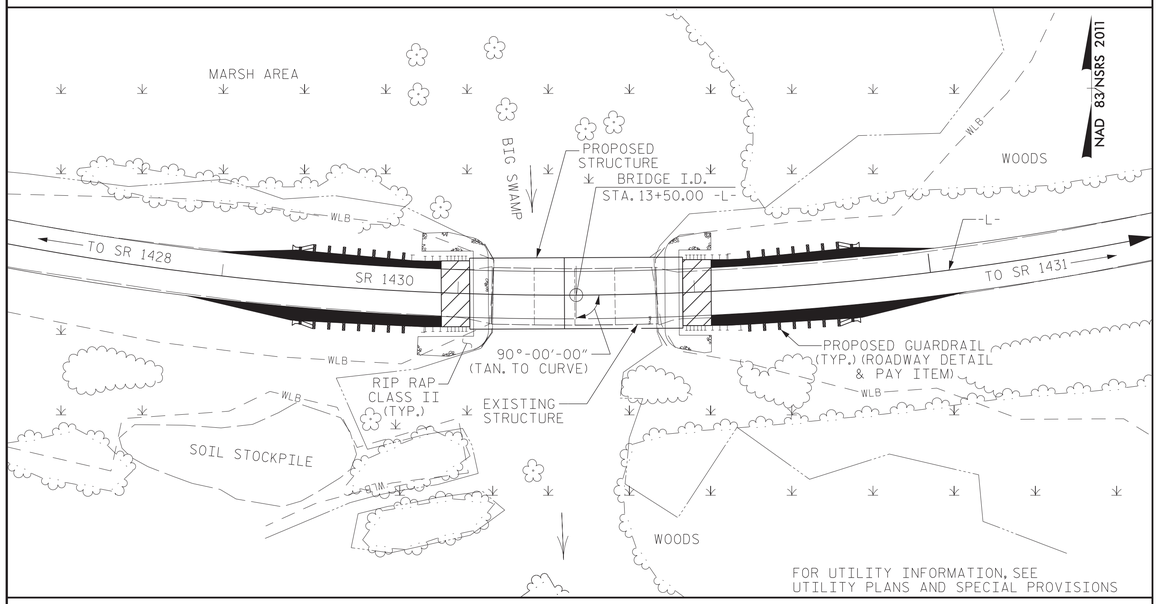

LOCATION SKETCH

HYDRAULIC DATA

DESIGN DISCHARGE	= 1000 C.F.S.
FREQUENCY OF DESIGN DISCHARGE	= 25 YRS.
DESIGN HIGH WATER ELEVATION	= 128.8'
DRAINAGE AREA	= 10.4 SQ. MI.
BASE DISCHARGE (Q100)	= 1500 C.F.S.
BASE HIGH WATER ELEVATION	= 129.6'

OVERTOPPING FLOOD DATA

OVERTOPPING DISCHARGE	= 2613 C.F.S.
FREQUENCY OF OVERTOPPING FLOOD	= 500+ YRS.
OVERTOPPING FLOOD ELEVATION	= 131.9'

OVERTOPPING OCCURS AT APPROXIMATE STA. 15+00.00 -L-

TOTAL BILL OF MATERIAL

	REMOVAL OF EXISTING STRUCTURE	ASBESTOS ASSESSMENT	PDA TESTING	UNCLASSIFIED STRUCTURE EXCAVATION	CLASS A CONCRETE	BRIDGE APPROACH SLABS	REINFORCING STEEL	PILE DRIVING EQUIPMENT SETUP FOR HP 12x53 STEEL PILES	PILE DRIVING EQUIPMENT SETUP FOR HP 14x73 GALVANIZED STEEL PILES	HP 12x53 STEEL PILES		HP 14x73 GALVANIZED STEEL PILES		PILE REDRIVES
	LUMP SUM	LUMP SUM	EACH	LUMP SUM	CY	LUMP SUM	LBS	EACH	EACH	No.	LF	No.	LF	EACH
SUPERSTRUCTURE						LUMP SUM								
END BENT No. 1				LUMP SUM	13.0		1,965	5		5	225			5
BENT No. 1					9.8		1,932		7			7	315	7
END BENT No. 2				LUMP SUM	13.0		1,965	5		5	250			5
TOTAL	LUMP SUM	LUMP SUM	1	LUMP SUM	35.8	LUMP SUM	5,862	10	7	10	475	7	315	17

TOTAL BILL OF MATERIAL (CONT'D)

	VERTICAL CONCRETE BARRIER RAIL	RIP RAP CLASS II (2'-0" THICK)	GEOTEXTILE FOR DRAINAGE	ELASTOMERIC BEARINGS	3'-0" x 1'-9" PRESTRESSED CONCRETE CORED SLAB	
	LF	TON	SY	LUMP SUM	No.	LF
SUPERSTRUCTURE	180.50			LUMP SUM	20	900
END BENT No. 1		67	75			
BENT No. 1						
END BENT No. 2		48	53			
TOTAL	180.50	115	128	LUMP SUM	20	900

NOTES

ASSUMED LIVE LOAD = HL-93 OR ALTERNATE LOADING.

THIS BRIDGE HAS BEEN DESIGNED IN ACCORDANCE WITH THE AASHTO LRFD BRIDGE DESIGN SPECIFICATIONS.

THIS BRIDGE IS LOCATED IN SEISMIC ZONE 1.

THIS BRIDGE SHALL BE CONSTRUCTED USING TOP-DOWN CONSTRUCTION METHODS. THE USE OF A TEMPORARY CAUSEWAY OR WORK BRIDGE IS NOT PERMITTED.

THIS STRUCTURE HAS BEEN DESIGNED IN ACCORDANCE WITH "HEC 18 - EVALUATING SCOUR AT BRIDGES."

THE SUBSTRUCTURE OF THE EXISTING BRIDGE INDICATED ON THE PLANS IS FROM THE BEST INFORMATION AVAILABLE. SINCE THIS INFORMATION IS SHOWN FOR THE CONVENIENCE OF THE CONTRACTOR, THE CONTRACTOR SHALL HAVE NO CLAIM WHATSOEVER AGAINST THE DEPARTMENT OF TRANSPORTATION FOR ANY DELAYS OR ADDITIONAL COST INCURRED BASED ON DIFFERENCE BETWEEN THE EXISTING BRIDGE SUBSTRUCTURE SHOWN ON THE PLANS AND THE ACTUAL CONDITIONS AT THE PROJECT SITE.

REMOVAL OF THE EXISTING BRIDGE SHALL BE PERFORMED SO AS NOT TO ALLOW DEBRIS TO FALL INTO THE WATER. THE CONTRACTOR SHALL REMOVE THE BRIDGE AND SUBMIT PLANS FOR DEMOLITION IN ACCORDANCE WITH ARTICLE 402-2 OF THE STANDARD SPECIFICATIONS.

FOR OTHER DESIGN DATA AND GENERAL NOTES, SEE SHEET SN.

FOR SUBMITTAL OF WORKING DRAWINGS, SEE SPECIAL PROVISIONS.

FOR FALSEWORK AND FRAMEWORK, SEE SPECIAL PROVISIONS.

FOR CRANE SAFETY, SEE SPECIAL PROVISIONS.

FOR GROUT FOR STRUCTURES, SEE SPECIAL PROVISIONS.

FOR EROSION CONTROL MEASURES, SEE EROSION CONTROL PLANS.

ASPHALT WEARING SURFACE IS INCLUDED IN ROADWAY QUANTITY ON ROADWAY PLANS.

THE MATERIAL SHOWN IN THE CROSS-HATCHED AREA SHALL BE EXCAVATED FOR A DISTANCE OF 20'± LEFT SIDE AND 20'± RIGHT SIDE OF THE CENTERLINE ROADWAY AS DIRECTED BY THE ENGINEER. THIS WORK WILL BE PAID FOR AT THE CONTRACT LUMP SUM PRICE FOR UNCLASSIFIED STRUCTURE EXCAVATION. SEE SECTION 412 OF THE STANDARD SPECIFICATIONS.

THE EXISTING STRUCTURE CONSISTING OF FOUR (4) TIMBER JOIST SPANS @ 17'-10", 2 @ 17'-1", AND 18'-1", 24'-0" ± CLEAR ROADWAY WIDTH AND REINFORCED CONCRETE SLAB ON TIMBER PILES WITH STEEL CRUTCH BENTS LOCATED AT THE PROPOSED STRUCTURE SHALL BE REMOVED. THE EXISTING BRIDGE IS PRESENTLY POSTED FOR LOAD LIMIT.

FOR ASBESTOS ASSESSMENT FOR BRIDGE DEMOLITION AND RENOVATION ACTIVITIES, SEE SPECIAL PROVISIONS.

INASMUCH AS THE PAINT SYSTEM ON THE EXISTING STRUCTURAL STEEL CONTAINS LEAD, THE CONTRACTOR'S ATTENTION IS DIRECTED TO ARTICLE 107-1 OF THE STANDARD SPECIFICATIONS. ANY COSTS RESULTING FROM COMPLIANCE WITH APPLICABLE STATE OR FEDERAL REGULATIONS PERTAINING TO HANDLING OF MATERIALS CONTAINING LEAD BASED PAINT SHALL BE INCLUDE IN THE BID PRICE FOR "REMOVAL OF EXISTING STRUCTURE AT STATION 13+50.00 -L-.

FOR INTERIOR BENT 1, ONLY PARTIAL GALVANIZING OF THE PILES IS REQUIRED. SEE INTERIOR BENT SHEETS FOR REQUIRED GALVANIZED LENGTHS. PAYMENT FOR PARTIALLY GALVANIZED PILES WILL BE MADE UNDER THE CONTRACT UNIT PRICE FOR GALVANIZED STEEL PILES.

CONTRACTOR SHOULD BE AWARE THAT BENT CAP MAY BE BELOW WATER SURFACE. BENT CONSTRUCTION SHOULD ALLOW FOR THIS POSSIBILITY. NO ADDITIONAL PAYMENT WILL BE MADE FOR BENT CONSTRUCTION BELOW WATER. THE ENTIRE COST OF THIS WORK SHALL BE INCLUDED WITH THE VARIOUS PAY ITEMS.

AT THE CONTRACTOR'S OPTION, PRESTRESSED CONCRETE END BENT AND BENT CAPS MAY BE SUBSTITUTED IN PLACE OF THE CAST-IN-PLACE CAPS. THE CONTRACTOR SHALL COORDINATE WITH THE RESIDENT ENGINEER TO RECEIVE REVISED PLANS AND DETAILS FROM THE STRUCTURES MANAGEMENT UNIT. THE REDESIGN AND ANY ADDITIONAL MATERIALS NEEDED WILL BE AT NO ADDITIONAL COST TO THE CONTRACTOR.

PROJECT NO. 17BP.3.R.88

SAMPSON COUNTY

STATION: 13+50.00 -L-

SHEET 3 OF 3

NORTH CAROLINA PROFESSIONAL SEAL 040384 ENGINEER JEFFREY C. WILSON

DocuSigned by: Jeffrey C. Wilson 844D3D559F4642A... 6/14/2022

DOCUMENT NOT CONSIDERED FINAL UNLESS ALL SIGNATURES COMPLETED

STEWART
Firm License No. C-1051
223 S. West St,
Suite 1100
Raleigh, NC 27603
T 919.380.8750
www.stewartinc.com

STATE OF NORTH CAROLINA
DEPARTMENT OF TRANSPORTATION
RALEIGH

GENERAL DRAWING
FOR BRIDGE ON SR 1430
OVER BIG SWAMP
BETWEEN SR 1428 AND SR 1431

REVISIONS						SHEET NO.
NO.	BY:	DATE:	NO.	BY:	DATE:	S-3
1			3			TOTAL SHEETS
2			4			19

DRAWN BY:	J. WILSON	DATE: 06-22
CHECKED BY:	D. RUGGLES	DATE: 06-22
DESIGN ENGINEER OF RECORD:	J. WILSON	DATE: 06-22

6/14/2022
...\17BP.3.R.88_SMU_GD2_810123.dgn
USER:jwilson

LOAD AND RESISTANCE FACTOR RATING (LRFD) SUMMARY FOR PRESTRESSED CONCRETE GIRDERS

LEVEL		VEHICLE	WEIGHT (W) (TONS)	CONTROLLING LOAD RATING	MINIMUM RATING FACTORS (RF)	TONS = W X RF	STRENGTH I LIMIT STATE											SERVICE III LIMIT STATE						COMMENT NUMBER
								MOMENT					SHEAR						MOMENT					
							LIVELOAD FACTORS	DISTRIBUTION FACTORS (DF)	RATING FACTOR	SPAN	GIRDER LOCATION	DISTANCE FROM LEFT END OF SPAN (ft)	DISTRIBUTION FACTORS (DF)	RATING FACTOR	SPAN	GIRDER LOCATION	DISTANCE FROM LEFT END OF SPAN (ft)	LIVELOAD FACTORS	DISTRIBUTION FACTORS (DF)	RATING FACTOR	SPAN	GIRDER LOCATION	DISTANCE FROM LEFT END OF SPAN (ft)	
DESIGN LOAD RATING		HL-93(Inv)	N/A	1	1.319	--	1.75	0.278	1.76	40'	EL	19.5	0.549	1.32	40'	EL	1.95	0.80	0.278	1.55	40'	EL	19.5	
		HL-93(Opr)	N/A	--	1.709	--	1.35	0.278	2.28	40'	EL	19.5	0.549	1.71	40'	EL	1.95	N/A	--	--	--	--	--	
		HS-20(Inv)	36.000	2	1.540	55.449	1.75	0.278	2.21	40'	EL	19.5	0.549	1.54	40'	EL	1.95	0.80	0.278	1.94	40'	EL	19.5	
		HS-20(Opr)	36.000	--	1.997	71.878	1.35	0.278	2.86	40'	EL	19.5	0.549	2	40'	EL	1.95	N/A	--	--	--	--	--	
LEGAL LOAD RATING	SV	SNSH	13.500	--	3.606	48.687	1.4	0.278	5.1	40'	EL	19.5	0.549	4.13	40'	EL	1.95	0.80	0.278	3.61	40'	EL	19.5	
		SNGARBS2	20.000	--	2.964	59.289	1.4	0.278	4.19	40'	EL	15.6	0.549	3.07	40'	EL	1.95	0.80	0.278	2.96	40'	EL	19.5	
		SNAGRIS2	22.000	--	2.906	63.929	1.4	0.278	4.09	40'	EL	15.6	0.549	2.91	40'	EL	1.95	0.80	0.278	2.92	40'	EL	15.6	
		SNCOTTS3	27.250	--	1.803	49.125	1.4	0.278	2.55	40'	EL	19.5	0.549	2.07	40'	EL	1.95	0.80	0.278	1.80	40'	EL	19.5	
		SNAGGRS4	34.925	--	1.623	56.667	1.4	0.278	2.29	40'	EL	19.5	0.549	1.82	40'	EL	1.95	0.80	0.278	1.62	40'	EL	19.5	
		SNS5A	35.550	--	1.578	56.107	1.4	0.278	2.23	40'	EL	19.5	0.549	1.9	40'	EL	1.95	0.80	0.278	1.58	40'	EL	19.5	
		SNS6A	39.950	--	1.502	59.992	1.4	0.278	2.12	40'	EL	19.5	0.549	1.77	40'	EL	1.95	0.80	0.278	1.50	40'	EL	19.5	
		SNS7B	42.000	3	1.432	60.149	1.4	0.278	2.02	40'	EL	19.5	0.549	1.81	40'	EL	1.95	0.80	0.278	1.43	40'	EL	19.5	
	TTST	TNAGRIT3	33.000	--	1.848	60.976	1.4	0.278	2.61	40'	EL	19.5	0.549	2.08	40'	EL	1.95	0.80	0.278	1.85	40'	EL	19.5	
		TNT4A	33.075	--	1.872	61.901	1.4	0.278	2.65	40'	EL	19.5	0.549	1.98	40'	EL	1.95	0.80	0.278	1.87	40'	EL	19.5	
		TNT6A	41.600	--	1.587	66.032	1.4	0.278	2.24	40'	EL	19.5	0.549	1.94	40'	EL	1.95	0.80	0.278	1.59	40'	EL	19.5	
		TNT7A	42.000	--	1.627	68.354	1.4	0.278	2.3	40'	EL	19.5	0.549	1.79	40'	EL	1.95	0.80	0.278	1.63	40'	EL	19.5	
		TNT7B	42.000	--	1.664	69.888	1.4	0.278	2.35	40'	EL	19.5	0.549	1.72	40'	EL	1.95	0.80	0.278	1.66	40'	EL	19.5	
		TNAGRIT4	43.000	--	1.619	69.61	1.4	0.278	2.28	40'	EL	15.6	0.549	1.65	40'	EL	1.95	0.80	0.278	1.62	40'	EL	19.5	
		TNAGT5A	45.000	--	1.498	67.412	1.4	0.278	2.12	40'	EL	19.5	0.549	1.71	40'	EL	1.95	0.80	0.278	1.50	40'	EL	19.5	
		TNAGT5B	45.000	--	1.455	65.486	1.4	0.278	2.06	40'	EL	19.5	0.549	1.56	40'	EL	1.95	0.80	0.278	1.46	40'	EL	19.5	

LOAD FACTORS:

DESIGN LOAD RATING FACTORS	LIMIT STATE	γ_{DC}	γ_{DW}
	STRENGTH I	1.25	1.50
	SERVICE III	1.00	1.00

NOTES:

MINIMUM RATING FACTORS ARE BASED ON THE STRENGTH I AND SERVICE III LIMIT STATES.

ALLOWABLE STRESSES FOR SERVICE III LIMIT STATE ARE AS REQUIRED FOR DESIGN.

COMMENTS:

1.
2.
3.
4.

(#) CONTROLLING LOAD RATING

(1) DESIGN LOAD RATING (HL-93)

(2) DESIGN LOAD RATING (HS-20)

(3) LEGAL LOAD RATING **

** SEE CHART FOR VEHICLE TYPE

GIRDER LOCATION

I - INTERIOR GIRDER
EL - EXTERIOR LEFT GIRDER
ER - EXTERIOR RIGHT GIRDER

LRFR SUMMARY

FOR SPAN 'A'

PROJECT NO. 17BP.3.R.88

SAMPSON COUNTY

STATION: 13+50.00 -L-

NORTH CAROLINA PROFESSIONAL SEAL 040384 ENGINEER JEFFREY C. WILSON

DocuSigned by: Jeffrey C. Wilson 844D3D599F4642A... 6/14/2022

DOCUMENT NOT CONSIDERED FINAL UNLESS ALL SIGNATURES COMPLETED

STEWART

Firm License No. C-1051
223 S. West St,
Suite 1100
Raleigh, NC 27603
T 919.380.8750
www.stewartinc.com

STATE OF NORTH CAROLINA
DEPARTMENT OF TRANSPORTATION
RALEIGH

STANDARD

LRFR SUMMARY FOR 40' CORED SLAB UNIT 90° SKEW

(NON-INTERSTATE TRAFFIC)

REVISIONS						SHEET NO.
NO.	BY:	DATE:	NO.	BY:	DATE:	S-4
1			3			TOTAL SHEETS
2			4			19

ASSEMBLED BY :	JCW	DATE :	06/22
CHECKED BY :	DRR	DATE :	06/22
DRAWN BY : CVC	6/10		
CHECKED BY : DNS	6/10		

6/14/2022
...\17BP.3.R.88_SMU_GD3_810123.dgn
USER:jwilson

STD. NO. 21LRFR1_90S_40L

LOAD AND RESISTANCE FACTOR RATING (LRFD) SUMMARY FOR PRESTRESSED CONCRETE GIRDERS

LEVEL		VEHICLE	WEIGHT (W) (TONS)	CONTROLLING LOAD RATING	MINIMUM RATING FACTORS (RF)	TONS = W X RF	STRENGTH I LIMIT STATE											SERVICE III LIMIT STATE						COMMENT NUMBER
								MOMENT					SHEAR						MOMENT					
							LIVELOAD FACTORS	DISTRIBUTION FACTORS (DF)	RATING FACTOR	SPAN	GIRDER LOCATION	DISTANCE FROM LEFT END OF SPAN (ft)	DISTRIBUTION FACTORS (DF)	RATING FACTOR	SPAN	GIRDER LOCATION	DISTANCE FROM LEFT END OF SPAN (ft)	LIVELOAD FACTORS	DISTRIBUTION FACTORS (DF)	RATING FACTOR	SPAN	GIRDER LOCATION	DISTANCE FROM LEFT END OF SPAN (ft)	
DESIGN LOAD RATING		HL-93(Inv)	N/A	1	1.394	--	1.75	0.276	1.57	50'	EL	24.5	0.531	1.39	50'	EL	2.45	0.80	0.276	1.44	50'	EL	24.5	
		HL-93(Opr)	N/A	--	1.807	--	1.35	0.276	2.03	50'	EL	24.5	0.531	1.81	50'	EL	2.45	N/A	--	--	--	--	--	
		HS-20(Inv)	36.000	2	1.667	60.007	1.75	0.276	1.95	50'	EL	24.5	0.531	1.67	50'	EL	2.45	0.80	0.276	1.79	50'	EL	24.5	
		HS-20(Opr)	36.000	--	2.161	77.787	1.35	0.276	2.52	50'	EL	24.5	0.531	2.16	50'	EL	2.45	N/A	--	--	--	--	--	
LEGAL LOAD RATING	SV	SNSH	13.500	--	3.635	49.079	1.4	0.276	4.95	50'	EL	24.5	0.531	4.7	50'	EL	2.45	0.80	0.276	3.64	50'	EL	24.5	
		SNGARBS2	20.000	--	2.871	57.42	1.4	0.276	3.91	50'	EL	24.5	0.531	3.42	50'	EL	2.45	0.80	0.276	2.87	50'	EL	24.5	
		SNAGRIS2	22.000	--	2.778	61.109	1.4	0.276	3.78	50'	EL	19.6	0.531	3.21	50'	EL	2.45	0.80	0.276	2.78	50'	EL	24.5	
		SNCOTTS3	27.250	--	1.814	49.418	1.4	0.276	2.47	50'	EL	24.5	0.531	2.36	50'	EL	2.45	0.80	0.276	1.81	50'	EL	24.5	
		SNAGGRS4	34.925	--	1.577	55.063	1.4	0.276	2.15	50'	EL	24.5	0.531	2.01	50'	EL	2.45	0.80	0.276	1.58	50'	EL	24.5	
		SNS5A	35.550	--	1.537	54.657	1.4	0.276	2.09	50'	EL	24.5	0.531	2.07	50'	EL	2.45	0.80	0.276	1.54	50'	EL	24.5	
		SNS6A	39.950	--	1.438	57.43	1.4	0.276	1.96	50'	EL	24.5	0.531	1.91	50'	EL	2.45	0.80	0.276	1.44	50'	EL	24.5	
		SNS7B	42.000	--	1.370	57.54	1.4	0.276	1.87	50'	EL	24.5	0.531	1.91	50'	EL	2.45	0.80	0.276	1.37	50'	EL	24.5	
	TTST	TNAGRIT3	33.000	--	1.761	58.118	1.4	0.276	2.4	50'	EL	24.5	0.531	2.25	50'	EL	2.45	0.80	0.276	1.76	50'	EL	24.5	
		TNT4A	33.075	--	1.777	58.759	1.4	0.276	2.42	50'	EL	24.5	0.531	2.17	50'	EL	2.45	0.80	0.276	1.78	50'	EL	24.5	
		TNT6A	41.600	--	1.480	61.558	1.4	0.276	2.01	50'	EL	24.5	0.531	2.08	50'	EL	2.45	0.80	0.276	1.48	50'	EL	24.5	
		TNT7A	42.000	--	1.502	63.087	1.4	0.276	2.05	50'	EL	24.5	0.531	1.94	50'	EL	2.45	0.80	0.276	1.50	50'	EL	24.5	
		TNT7B	42.000	--	1.566	65.773	1.4	0.276	2.13	50'	EL	24.5	0.531	1.84	50'	EL	2.45	0.80	0.276	1.57	50'	EL	24.5	
		TNAGRIT4	43.000	--	1.486	63.902	1.4	0.276	2.02	50'	EL	24.5	0.531	1.77	50'	EL	2.45	0.80	0.276	1.49	50'	EL	24.5	
		TNAGT5A	45.000	--	1.388	62.47	1.4	0.276	1.89	50'	EL	24.5	0.531	1.8	50'	EL	2.45	0.80	0.276	1.39	50'	EL	24.5	
		TNAGT5B	45.000	3	1.360	61.206	1.4	0.276	1.85	50'	EL	24.5	0.531	1.68	50'	EL	2.45	0.80	0.276	1.36	50'	EL	24.5	

LOAD FACTORS:

	LIMIT STATE	γ_{DC}	γ_{DW}
DESIGN LOAD RATING FACTORS	STRENGTH I	1.25	1.50
	SERVICE III	1.00	1.00

NOTES:

MINIMUM RATING FACTORS ARE BASED ON THE STRENGTH I AND SERVICE III LIMIT STATES.

ALLOWABLE STRESSES FOR SERVICE III LIMIT STATE ARE AS REQUIRED FOR DESIGN.

COMMENTS:

1.
2.
3.
4.

CONTROLLING LOAD RATING

1 DESIGN LOAD RATING (HL-93)

2 DESIGN LOAD RATING (HS-20)

3 LEGAL LOAD RATING **

** SEE CHART FOR VEHICLE TYPE

GIRDER LOCATION

I - INTERIOR GIRDER
EL - EXTERIOR LEFT GIRDER
ER - EXTERIOR RIGHT GIRDER

LRFR SUMMARY

FOR SPAN 'B'

PROJECT NO. 17BP.3.R.88

SAMPSON COUNTY

STATION: 13+50.00 -L-

NORTH CAROLINA PROFESSIONAL SEAL 040384 ENGINEER JEFFREY C. WILSON

DocuSigned by: Jeffrey C. Wilson 844D3D599F4642A... 6/14/2022

DOCUMENT NOT CONSIDERED FINAL UNLESS ALL SIGNATURES COMPLETED

STEWART

Firm License No. C-1051
223 S. West St,
Suite 1100
Raleigh, NC 27603
T 919.380.8750
www.stewartinc.com

STATE OF NORTH CAROLINA
DEPARTMENT OF TRANSPORTATION
RALEIGH

STANDARD

LRFR SUMMARY FOR 50' CORED SLAB UNIT 90° SKEW (NON-INTERSTATE TRAFFIC)

REVISIONS						SHEET NO.
NO.	BY:	DATE:	NO.	BY:	DATE:	S-5
1			3			TOTAL SHEETS
2			4			19

ASSEMBLED BY :	JCW	DATE :	06/22
CHECKED BY :	DRR	DATE :	06/22
DRAWN BY :	CVC 6/10		
CHECKED BY :	DNS 6/10		

6/14/2022
...\17BP.3.R.88_SMU_GD4_810123.dgn
USER:jwilson

STD. NO. 21LRFR1_90S_50L

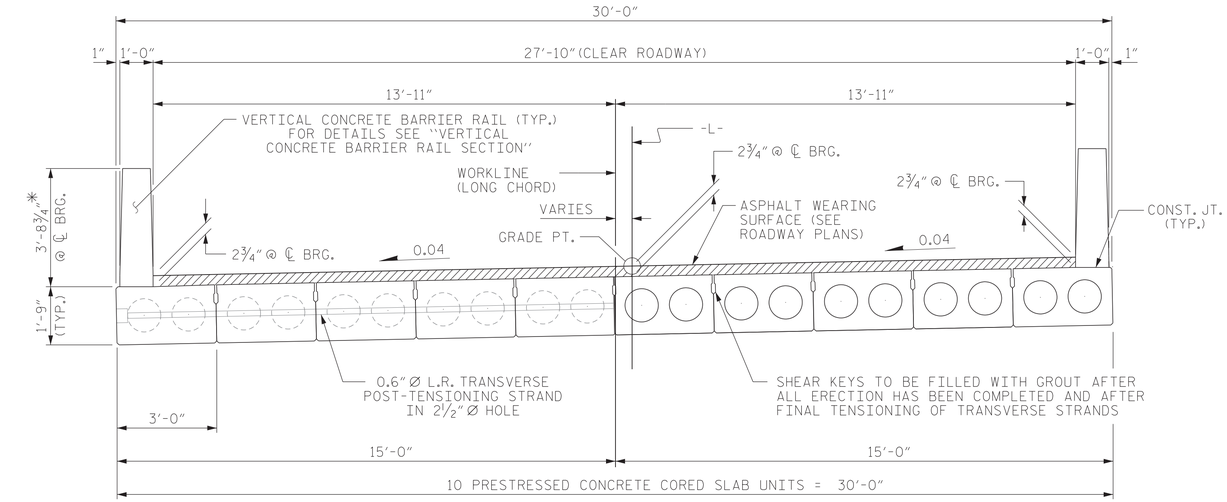

HALF SECTION
AT INTERMEDIATE DIAPHRAGMS

HALF SECTION
THROUGH VOIDS

TYPICAL SECTION

* - THE MAXIMUM BARRIER RAIL HEIGHT AND ASPHALT THICKNESS IS SHOWN. THE HEIGHT OF THE BARRIER RAIL AND ASPHALT THICKNESS VARIES WHILE THE TOP OF THE BARRIER RAIL FOLLOWS THE PROFILE OF THE GUTTERLINE. FOR RAIL HEIGHT DETAILS AND ASPHALT THICKNESS SEE THE "VERTICAL CONCRETE BARRIER RAIL SECTION" DETAIL.

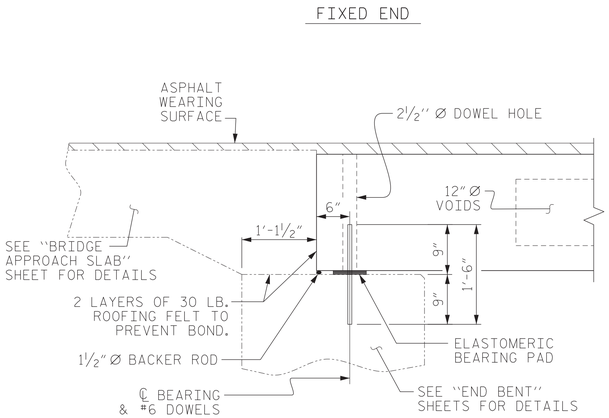

SECTION AT END BENT

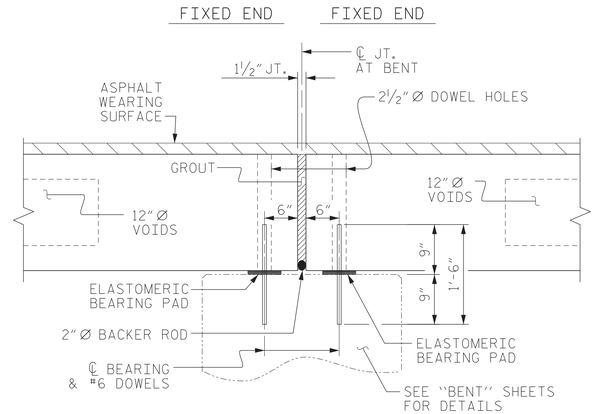

SECTION AT BENT

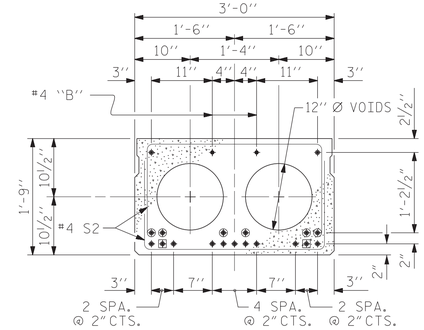

INTERIOR SLAB SECTION (40' UNIT)

(13 STRANDS REQUIRED)

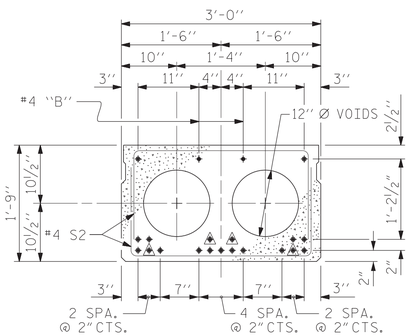

INTERIOR SLAB SECTION (50' UNIT)

(19 STRANDS REQUIRED)

0.6" Ø LOW RELAXATION STRAND LAYOUT

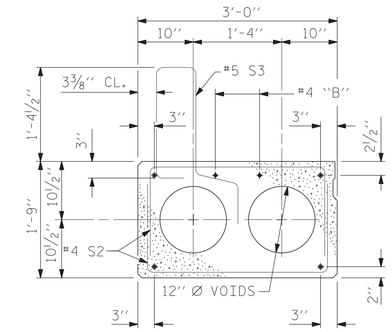

EXT. SLAB SECTION

(FOR PRESTRESSED STRAND LAYOUT, SEE INTERIOR SLAB SECTION.)

- ◉ BOND SHALL BE BROKEN ON THESE STRANDS FOR A DISTANCE OF 6'-0" FROM END OF CORED SLAB UNIT. SEE STANDARD SPECIFICATIONS, ARTICLE 1078-7.
- ◉ BOND SHALL BE BROKEN ON THESE STRANDS FOR A DISTANCE OF 2'-0" FROM END OF CORED SLAB UNIT. SEE STANDARD SPECIFICATIONS, ARTICLE 1078-7.
- ◉ OPTIONAL FULL LENGTH DEBONDED STRANDS. THESE STRANDS ARE NOT REQUIRED. IF THE FABRICATOR CHOOSES TO INCLUDE THESE STRANDS IN THE CORED SLAB UNIT, THE STRANDS SHALL BE DEBONDED FOR THE FULL LENGTH OF THE UNIT AT NO ADDITIONAL COST. SEE STANDARD SPECIFICATIONS, ARTICLE 1078-7.

DEBONDING LEGEND

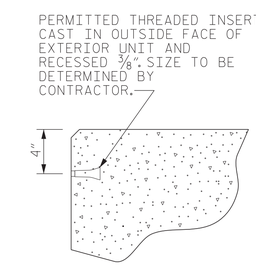

THREADED INSERT DETAIL

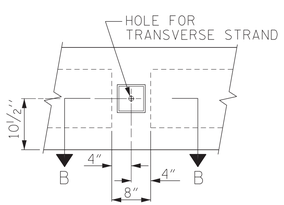

ELEVATION VIEW

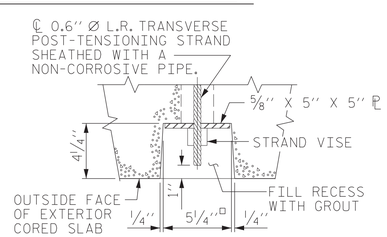

SECTION B-B

GROUTED RECESS AT END OF POST-TENSIONED STRAND OF CORED SLABS

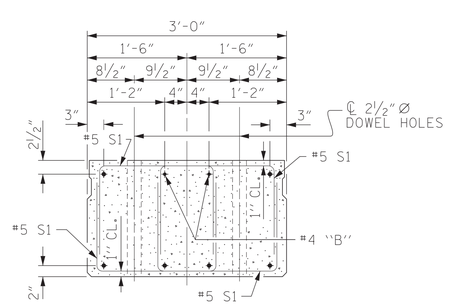

END ELEVATION

SHOWING PLACEMENT OF DOUBLE STIRRUPS AND LOCATION OF DOWEL HOLES. (STRAND LAYOUT NOT SHOWN.) INTERIOR SLAB UNIT SHOWN-EXTERIOR SLAB UNIT SIMILAR EXCEPT SHEAR KEY LOCATION.

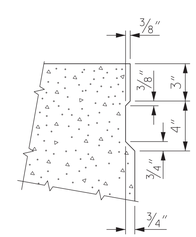

SHEAR KEY DETAIL

NOTE: OMIT SHEAR KEY ON OUTSIDE FACE OF EXTERIOR CORED SLABS.

PROJECT NO. 17BP.3.R.88

SAMPSON COUNTY

STATION: 13+50.00 -L-

SHEET 1 OF 5

NORTH CAROLINA PROFESSIONAL SEAL 040384 ENGINEER JEFFREY C. WILSON

DocuSigned by: Jeffrey C. Wilson 844D3D599F4642A... 6/14/2022

DOCUMENT NOT CONSIDERED FINAL UNLESS ALL SIGNATURES COMPLETED

STEWART

Firm License No. C-1051
223 S. West St,
Suite 1100
Raleigh, NC 27603
T 919.380.8750
www.stewartinc.com

STATE OF NORTH CAROLINA
DEPARTMENT OF TRANSPORTATION
RALEIGH

STANDARD
3'-0" X 1'-9"
PRESTRESSED CONCRETE CORED SLAB UNIT
90° SKEW

REVISIONS						SHEET NO.
NO.	BY:	DATE:	NO.	BY:	DATE:	S-6
1			3			TOTAL SHEETS
2			4			19

ASSEMBLED BY :	JCW	DATE :	06/22
CHECKED BY :	DRR	DATE :	06/22
DRAWN BY : DGE	5/09	REV. 8/14	MAA/TMC
CHECKED BY : BCH	6/09		

6/14/2022
...\17BP.3.R.88_SMU_TS_810123.dgn
USER:jwilson

STD. NO. 21"PCS2_30_90S

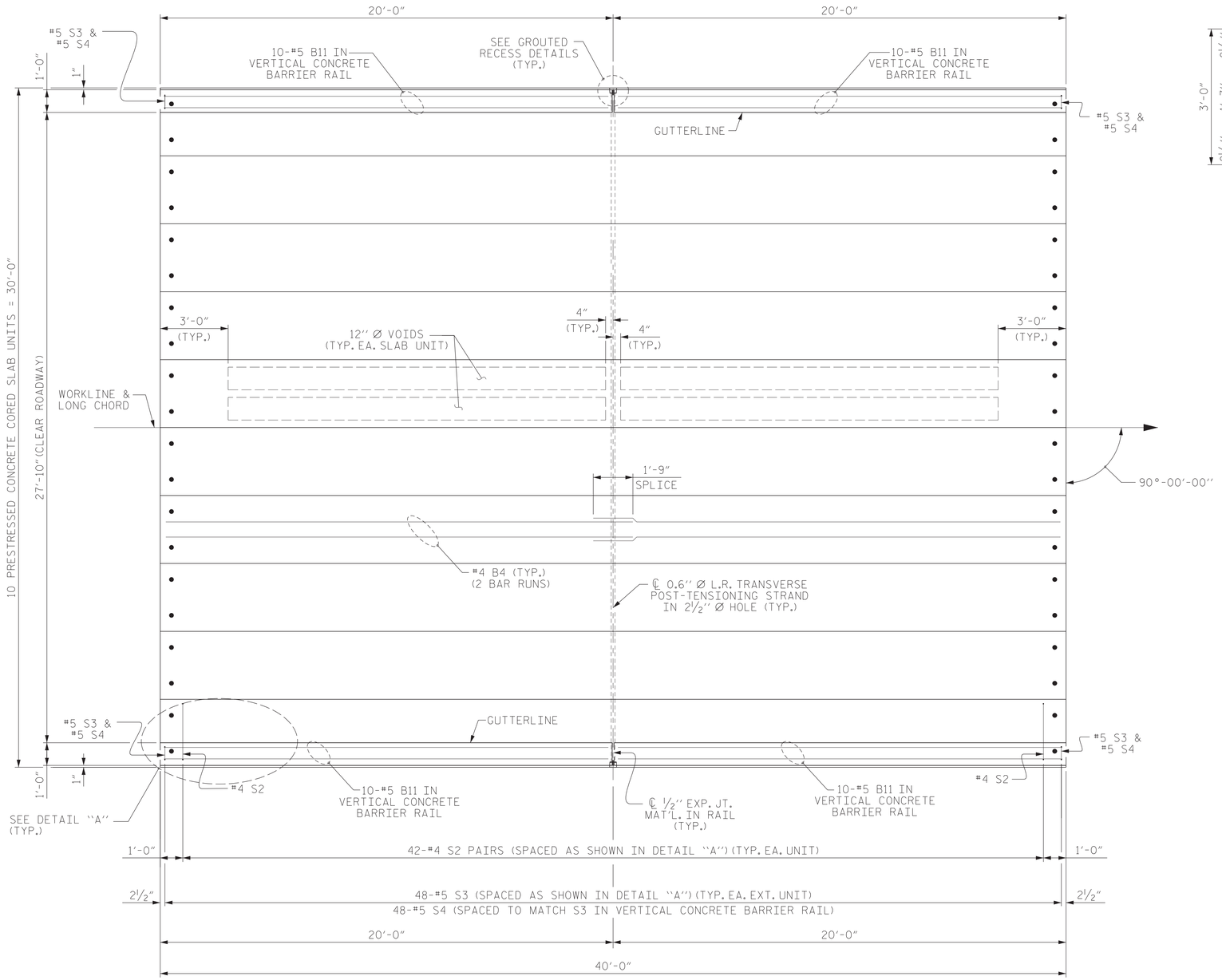

PLAN OF UNIT

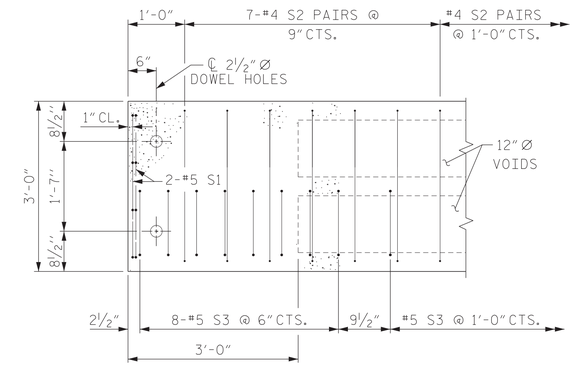

DETAIL "A"

(TYPICAL EACH END OF UNIT)
NOTE: EXTERIOR UNIT SHOWN - INTERIOR UNIT SIMILAR EXCEPT OMIT #5 S3 BARS.

PROJECT NO. 17BP.3.R.88

SAMPSON COUNTY

STATION: 13+50.00 -L-

SHEET 2 OF 5

NORTH CAROLINA PROFESSIONAL SEAL 040384 ENGINEER JEFFREY C. WILSON

DocuSigned by: Jeffrey C. Wilson 844D3D599F4642A... 6/14/2022

DOCUMENT NOT CONSIDERED FINAL UNLESS ALL SIGNATURES COMPLETED

STEWART

Firm License No. C-1051
223 S. West St,
Suite 1100
Raleigh, NC 27603
T 919.380.8750
www.stewartinc.com

STATE OF NORTH CAROLINA
DEPARTMENT OF TRANSPORTATION
RALEIGH

SPAN A

PLAN OF 40' UNIT
27'-10" CLEAR ROADWAY
90° SKEW

REVISIONS						SHEET NO.
NO.	BY:	DATE:	NO.	BY:	DATE:	S-7
1			3			TOTAL SHEETS
2			4			19

ASSEMBLED BY :	JCW		DATE :	06/22
CHECKED BY :	DRR		DATE :	06/22
DRAWN BY : DGE	3/09	REV.	12/5/11	MAA/AAC
CHECKED BY : BCH	3/09	REV.	8/14	MAA/TMG

6/14/2022
...\17BP.3.R.88_SMU_S1_810123.dgn
USER:jwilson

STD. NO. 21" PCS_30_90S_40L

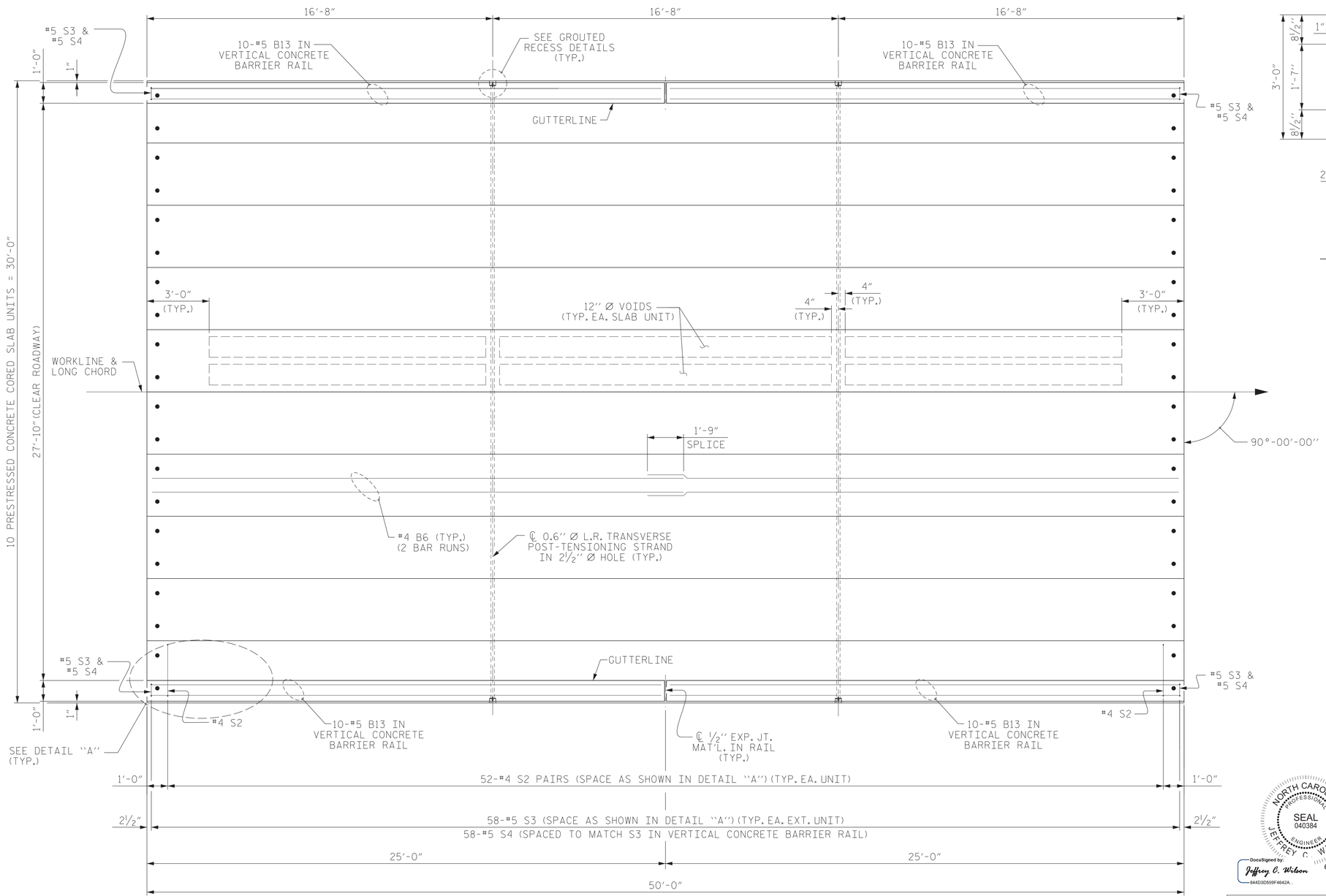

PLAN OF UNIT

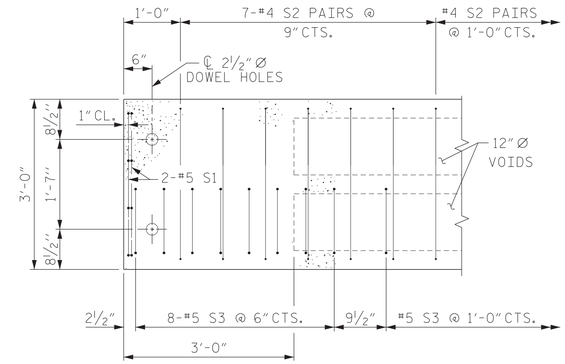

DETAIL "A"

(TYPICAL EACH END OF UNIT)
NOTE: EXTERIOR UNIT SHOWN - INTERIOR UNIT SIMILAR EXCEPT OMIT #5 S3 BARS.

PROJECT NO. 17BP.3.R.88

SAMPSON COUNTY

STATION: 13+50.00 -L-

SHEET 3 OF 5

NORTH CAROLINA PROFESSIONAL SEAL 040384 ENGINEER JEFFREY C. WILSON

DocuSigned by: Jeffrey C. Wilson 844D3D599F4642A... 6/14/2022

DOCUMENT NOT CONSIDERED FINAL UNLESS ALL SIGNATURES COMPLETED

STEWART

Firm License No. C-1051
223 S. West St,
Suite 1100
Raleigh, NC 27603
T 919.380.8750
www.stewartinc.com

STATE OF NORTH CAROLINA
DEPARTMENT OF TRANSPORTATION
RALEIGH

SPAN B

PLAN OF 50' UNIT 27'-10" CLEAR ROADWAY 90° SKEW

REVISIONS							SHEET NO.
NO.	BY:	DATE:	NO.	BY:	DATE:		S-8
1			3				TOTAL SHEETS
2			4				19

ASSEMBLED BY :	JCW		DATE :	06/22	
CHECKED BY :	DRR		DATE :	06/22	
DRAWN BY : DGE	3/09	REV.	12/5/11	MAA/AAC	
CHECKED BY : BCH	3/09	REV.	8/14	MAA/TMG	

6/14/2022
...\17BP.3.R.88_SMU_S2_810123.dgn
USER:jwilson

STD. NO. 21"PCS_30_90S_50L

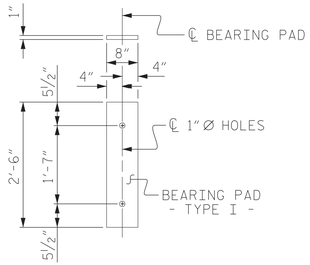

FIXED END
(TYPE I - 40 REQ'D)

ELASTOMERIC BEARING DETAILS

ELASTOMER IN ALL BEARINGS SHALL BE 50 DUROMETER HARDNESS.

CORED SLABS REQUIRED			
	NUMBER	LENGTH	TOTAL LENGTH
40' UNIT			
EXTERIOR C.S.	2	40'-0"	80'-0"
INTERIOR C.S.	8	40'-0"	320'-0"
TOTAL	10		400'-0"

CORED SLABS REQUIRED			
	NUMBER	LENGTH	TOTAL LENGTH
50' UNIT			
EXTERIOR C.S.	2	50'-0"	100'-0"
INTERIOR C.S.	8	50'-0"	400'-0"
TOTAL	10		500'-0"

BAR TYPES

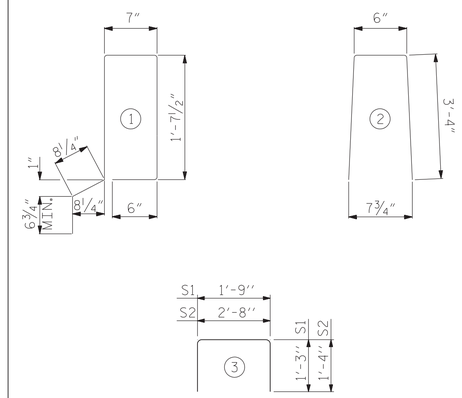

ALL BAR DIMENSIONS ARE OUT TO OUT

CONCRETE RELEASE STRENGTH	
UNIT	PSI
40' UNITS	4000
50' UNITS	4900

DEAD LOAD DEFLECTION AND CAMBER	
	3'-0" x 1'-9"
40' CORED SLAB UNIT	0.6" Ø L.R. STRAND
CAMBER (SLAB ALONE IN PLACE)	⅞" ↑
DEFLECTION DUE TO SUPERIMPOSED DEAD LOAD**	⅛" ↓
FINAL CAMBER	¾" ↑

** INCLUDES FUTURE WEARING SURFACE

DEAD LOAD DEFLECTION AND CAMBER	
	3'-0" x 1'-9"
50' CORED SLAB UNIT	0.6" Ø L.R. STRAND
CAMBER (SLAB ALONE IN PLACE)	1½" ↑
DEFLECTION DUE TO SUPERIMPOSED DEAD LOAD**	⅜" ↓
FINAL CAMBER	1⅛" ↑

** INCLUDES FUTURE WEARING SURFACE

GRADE 270 STRANDS	
	0.6" Ø L.R.
AREA (SQUARE INCHES)	0.217
ULTIMATE STRENGTH (LBS. PER STRAND)	58,600
APPLIED PRESTRESS (LBS. PER STRAND)	43,950

NOTES

ALL PRESTRESSING STRANDS SHALL BE 7-WIRE LOW RELAXATION GRADE 270 STRANDS AND SHALL CONFORM TO AASHTO M203 EXCEPT FOR SAMPLING REQUIREMENTS WHICH SHALL BE IN ACCORDANCE WITH THE STANDARD SPECIFICATIONS.

ALL REINFORCING STEEL CAST WITH THE CORED SLAB SECTIONS SHALL BE GRADE 60 AND SHALL BE INCLUDED IN THE UNIT PRICE BID FOR PRESTRESSED CONCRETE CORED SLABS.

RECESSES FOR TRANSVERSE STRANDS SHALL BE GROUTED AFTER THE TENSIONING OF THE STRANDS.

THE 2½" Ø DOWEL HOLES AT FIXED ENDS OF SLAB SECTIONS SHALL BE FILLED WITH NON-SHRINK GROUT.

THE BACKER RODS SHALL CONFORM TO THE REQUIREMENTS OF TYPE M BOND BREAKER. SEE SECTION 1028 OF THE STANDARD SPECIFICATIONS.

WHEN CORED SLABS ARE CAST, AN INTERNAL HOLD-DOWN SYSTEM SHALL BE EMPLOYED TO PREVENT VOIDS FROM RISING OR MOVING SIDEWAYS. AT LEAST SIX WEEKS PRIOR TO CASTING CORED SLABS, THE CONTRACTOR SHALL SUBMIT TO THE ENGINEER FOR REVIEW AND COMMENT, DETAILED DRAWINGS OF THE PROPOSED HOLD-DOWN SYSTEM. IN ADDITION TO STRUCTURAL DETAILS, LOCATION AND SPACING OF THE HOLD-DOWNS SHALL BE INDICATED.

ALL REINFORCING STEEL IN THE VERTICAL CONCRETE BARRIER RAIL SHALL BE EPOXY COATED.

PRESTRESSING STRANDS SHALL BE CUT FLUSH WITH THE CORED SLAB UNIT ENDS.

APPLY EPOXY PROTECTIVE COATING TO CORED SLAB UNIT ENDS.

GROOVED CONTRACTION JOINTS, ½" IN DEPTH, SHALL BE TOOLED IN ALL EXPOSED FACES OF THE BARRIER RAIL AND IN ACCORDANCE WITH ARTICLE 825-10(B) OF THE STANDARD SPECIFICATIONS. A CONTRACTION JOINT SHALL BE LOCATED AT EACH THIRD POINT BETWEEN BARRIER RAIL EXPANSION JOINTS. ONLY ONE CONTRACTION JOINT IS REQUIRED AT MIDPOINT OF BARRIER RAIL SEGMENTS LESS THAN 20 FEET IN LENGTH AND NO CONTRACTION JOINTS ARE REQUIRED FOR THOSE SEGMENTS LESS THAN 10 FEET IN LENGTH.

FLAME CUTTING OF THE TRANSVERSE POST-TENSIONING STRAND IS NOT ALLOWED.

THE TRANSFER OF LOAD FROM THE ANCHORAGES TO THE CORED SLAB UNIT SHALL BE DONE WHEN THE CONCRETE HAS REACHED A COMPRESSIVE STRENGTH OF NOT LESS THAN THE REQUIRED STRENGTH SHOWN IN THE "CONCRETE RELEASE STRENGTH" TABLE.

FOR GROUT FOR STRUCTURES, SEE SPECIAL PROVISIONS.

THE PERMITTED THREADED INSERTS ARE DETAILED AS AN OPTION FOR THE CONTRACTOR TO ATTACH FALSEWORK AND FORMWORK DURING CONSTRUCTION.

THE PERMITTED THREADED INSERTS IN THE EXTERIOR UNITS SHALL BE SIZED BY THE CONTRACTOR, SPACED AT 4'-0" CENTERS AND GALVANIZED IN ACCORDANCE WITH SECTION 1076 OF THE STANDARD SPECIFICATIONS. STAINLESS STEEL THREADED INSERTS MAY BE USED AS AN ALTERNATE.

THE PERMITTED THREADED INSERTS SHALL BE GROUTED BY THE CONTRACTOR IMMEDIATELY FOLLOWING REMOVAL OF THE FALSEWORK.

THE COST OF THE PERMITTED THREADED INSERTS SHALL BE INCLUDED IN THE PRICE BID FOR THE PRECAST UNITS.

POST-TENSIONING SHALL BE DONE IN ACCORDANCE WITH THE STANDARD SPECIFICATIONS.

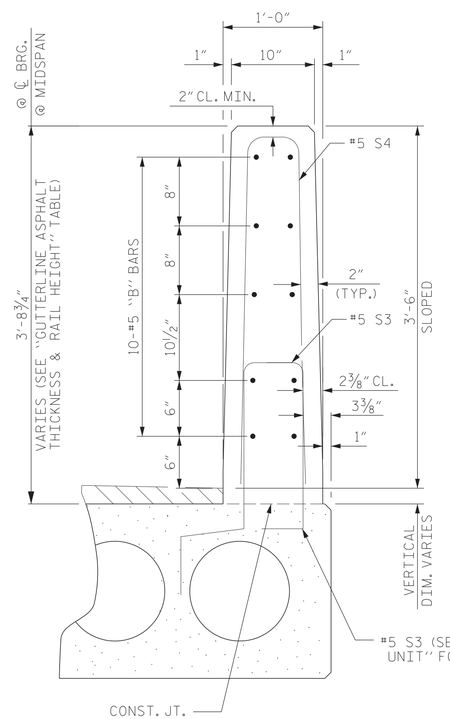

VERTICAL CONCRETE BARRIER RAIL SECTION

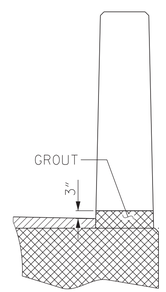

SECTION T-T
AT OPEN JOINT AT BENT
(THIS IS TO BE USED WHERE FOAM JOINT IS NOT USED)

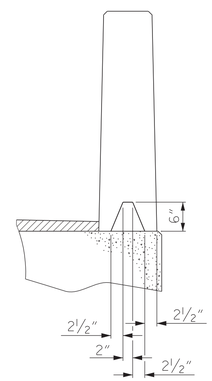

SECTION S-S
AT DAM IN OPEN JOINT
(THIS IS TO BE USED ONLY WHEN SLIP FORM IS USED)

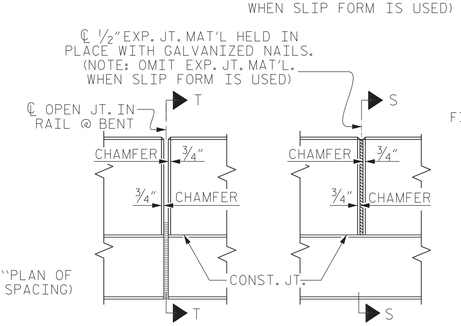

ELEVATION AT EXPANSION JOINTS

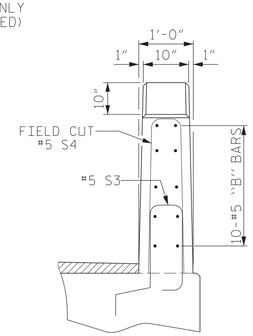

END VIEW

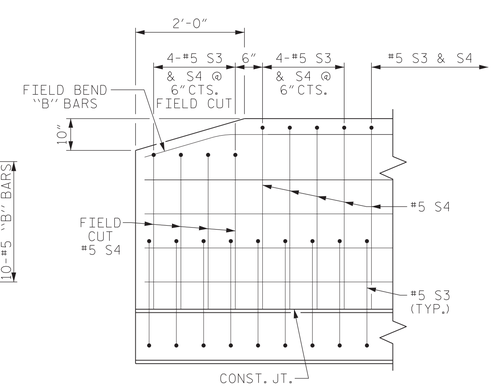

SIDE VIEW

END OF RAIL DETAILS

PROJECT NO. 17BP.3.R.88
SAMPSON COUNTY
STATION: 13+50.00 -L-
SHEET 4 OF 5

NORTH CAROLINA PROFESSIONAL SEAL 040384 ENGINEER JEFFREY C. WILSON
DocuSigned by: Jeffrey C. Wilson 844D3D559F4642A... 6/14/2022

DOCUMENT NOT CONSIDERED FINAL UNLESS ALL SIGNATURES COMPLETED

STEWART
Firm License No. C-1051
223 S. West St, Suite 1100
Raleigh, NC 27603
T 919.380.8750
www.stewartinc.com

STATE OF NORTH CAROLINA
DEPARTMENT OF TRANSPORTATION
RALEIGH

STANDARD
3'-0" X 1'-9"
PRESTRESSED CONCRETE CORED SLAB UNIT
90° SKEW

REVISIONS								SHEET NO.
NO.	BY:	DATE:	NO.	BY:	DATE:			S-9
1			3					TOTAL SHEETS
2			4					19

ASSEMBLED BY : JCW	DATE : 06/22		
CHECKED BY : DRR	DATE : 06/22		
DRAWN BY : DGE 5/09	REV. 5/18	MAA/THC	
CHECKED BY : BCH 6/09			

6/14/2022
...\17BP.3.R.88_SMU_CS1_810123.dgn
USER:jwilson

STD. NO. 21" PCS3_30_90S

BILL OF MATERIAL FOR VERTICAL CONCRETE BARRIER RAIL

BAR	BARS PER PAIR OF EXTERIOR UNITS	TOTAL NO.	SIZE	TYPE	LENGTH	WEIGHT
	40' UNIT					
✳B11	40	40	#5	STR	19'-7"	817
✳S4	96	96	#5	2	7'-2"	718
✳EPOXY COATED REINFORCING STEEL				LBS.		1535
CLASS AA CONCRETE				CU.YDS.		10.2
TOTAL VERTICAL CONCRETE BARRIER RAIL				LN. FT.		80.25

BILL OF MATERIAL FOR VERTICAL CONCRETE BARRIER RAIL

BAR	BARS PER PAIR OF EXTERIOR UNITS	TOTAL NO.	SIZE	TYPE	LENGTH	WEIGHT
	50' UNIT					
✳B13	40	40	#5	STR	24'-7"	1026
✳S4	116	116	#5	2	7'-2"	867
✳EPOXY COATED REINFORCING STEEL				LBS.		1893
CLASS AA CONCRETE				CU.YDS.		12.8
TOTAL VERTICAL CONCRETE BARRIER RAIL				LN. FT.		100.25

BILL OF MATERIAL FOR ONE 40' CORED SLAB UNIT

				EXTERIOR UNIT		INTERIOR UNIT	
BAR	NUMBER	SIZE	TYPE	LENGTH	WEIGHT	LENGTH	WEIGHT
B4	4	#4	STR	20'-9"	55	20'-9"	55
S1	8	#5	3	4'-3"	35	4'-3"	35
S2	84	#4	3	5'-4"	299	5'-4"	299
✳S3	48	#5	1	5'-7"	280		
REINFORCING STEEL			LBS.		389		389
✳EPOXY COATED REINFORCING STEEL			LBS.		280		
5000 P.S.I. CONCRETE			CU. YDS.		5.8		5.8
0.6" Ø L.R. STRANDS			No.		13		13

BILL OF MATERIAL FOR ONE 50' CORED SLAB UNIT

				EXTERIOR UNIT		INTERIOR UNIT	
BAR	NUMBER	SIZE	TYPE	LENGTH	WEIGHT	LENGTH	WEIGHT
B6	4	#4	STR	25'-9"	69	25'-9"	69
S1	8	#5	3	4'-3"	35	4'-3"	35
S2	104	#4	3	5'-4"	371	5'-4"	371
✳S3	58	#5	1	5'-7"	338		
REINFORCING STEEL			LBS.		475		475
✳EPOXY COATED REINFORCING STEEL			LBS.		338		
6500 P.S.I. CONCRETE			CU. YDS.		7.1		7.1
0.6" Ø L.R. STRANDS			No.		19		19

GUTTERLINE ASPHALT THICKNESS & RAIL HEIGHT

	ASPHALT OVERLAY THICKNESS	RAIL HEIGHT
	@ MID-SPAN	@ MID-SPAN
40' UNITS	2"	3'-8"
50' UNITS	1⅝"	3'-7⅝"

PROJECT NO. 17BP.3.R.88

SAMPSON COUNTY

STATION: 13+50.00 -L-

SHEET 5 OF 5

NORTH CAROLINA PROFESSIONAL SEAL 040384 ENGINEER JEFFREY C. WILSON

DocuSigned by: Jeffrey C. Wilson 844D3D599F4642A... 6/14/2022

DOCUMENT NOT CONSIDERED FINAL UNLESS ALL SIGNATURES COMPLETED

STEWART

Firm License No. C-1051
223 S. West St,
Suite 1100
Raleigh, NC 27603
T 919.380.8750
www.stewartinc.com

STATE OF NORTH CAROLINA
DEPARTMENT OF TRANSPORTATION
RALEIGH

STANDARD
3'-0'' X 1'-9''
PRESTRESSED CONCRETE
CORED SLAB UNIT
90° SKEW

REVISIONS						SHEET NO.
NO.	BY:	DATE:	NO.	BY:	DATE:	S-10
1			3			TOTAL SHEETS
2			4			19

ASSEMBLED BY : JCW		DATE : 06/22	
CHECKED BY : DRR		DATE : 06/22	
DRAWN BY : DGE 5/09	REV. 5/18	MAA/THC	
CHECKED BY : BCH 6/09			

6/14/2022
...\17BP.3.R.88_SMU_CS2_810123.dgn
USER:jwilson

STD. NO. 21"PCS3_30_90S

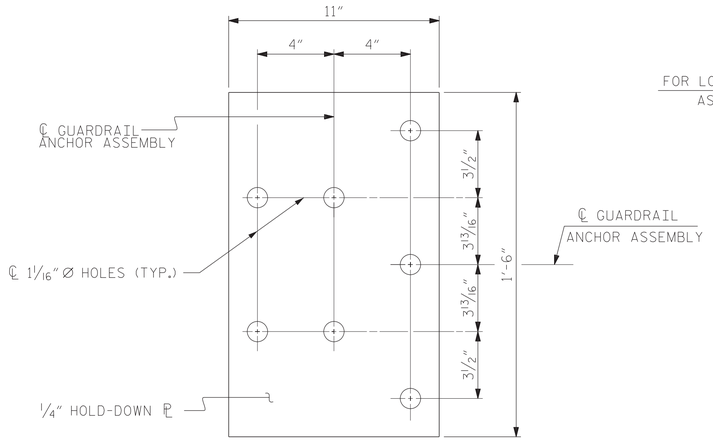

PLAN

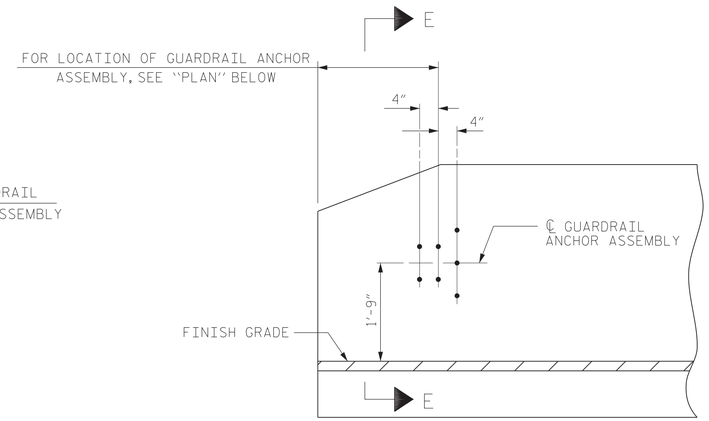

ELEVATION

NOTES

THE GUARDRAIL ANCHOR ASSEMBLY SHALL CONSIST OF A 1/4" HOLD DOWN PLATE AND 7 - 7/8" Ø BOLTS WITH NUTS AND WASHERS.

THE HOLD-DOWN PLATE SHALL CONFORM TO AASHTO M270 GRADE 36. AFTER FABRICATION, THE HOLD-DOWN PLATE SHALL BE HOT-DIP GALVANIZED IN ACCORDANCE WITH AASHTO M111.

BOLTS SHALL CONFORM TO THE REQUIREMENTS OF ASTM A307 AND NUTS SHALL CONFORM TO THE REQUIREMENTS OF AASHTO M291. BOLTS, NUTS AND WASHERS SHALL BE GALVANIZED. (AT THE CONTRACTOR'S OPTION, STAINLESS STEEL BOLTS, NUTS AND WASHERS MAY BE USED AS AN ALTERNATE FOR THE 7/8" Ø GALVANIZED BOLTS, NUTS AND WASHERS. THEY SHALL CONFORM TO OR EXCEED THE MECHANICAL REQUIREMENTS OF ASTM A307. THE USE OF THIS ALTERNATE SHALL BE APPROVED BY THE ENGINEER.)

THE GUARDRAIL ANCHOR ASSEMBLY IS REQUIRED AT ALL POINTS WHERE APPROACH GUARDRAIL IS TO BE ATTACHED TO THE END OF BARRIER RAIL. FOR POINTS OF ATTACHMENT, SEE SKETCH.

AFTER INSTALLATION, THE EXPOSED THREAD OF THE BOLT SHALL BE BURRED WITH A SHARP POINTED TOOL.

THE COST OF THE GUARDRAIL ANCHOR ASSEMBLY SHALL BE INCLUDED IN THE UNIT CONTRACT PRICE BID FOR VERTICAL CONCRETE BARRIER RAIL.

THE VERTICAL REINFORCING BARS MAY BE SHIFTED SLIGHTLY IN THE VERTICAL CONCRETE BARRIER RAIL TO CLEAR ASSEMBLY BOLTS.

THE 1 1/4" Ø HOLES SHALL BE FORMED OR DRILLED WITH A CORE BIT. IMPACT TOOLS WILL NOT BE PERMITTED. ANY CONCRETE DAMAGED BY THIS WORK SHALL BE REPAIRED TO THE SATISFACTION OF THE ENGINEER.

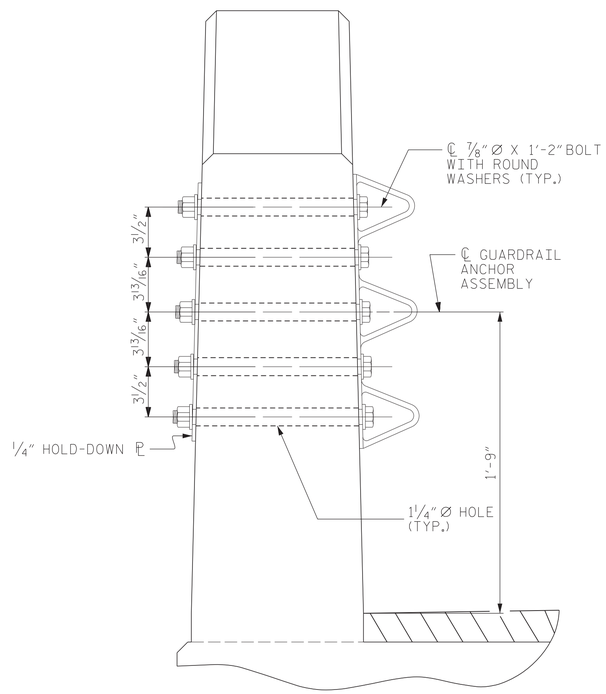

SECTION E-E

GUARDRAIL ANCHOR ASSEMBLY DETAILS

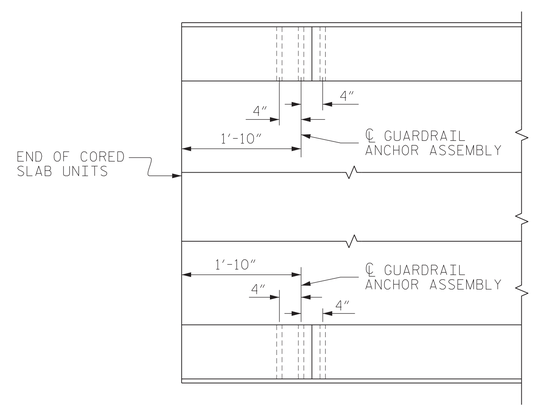

PLAN

LOCATION OF ANCHORS FOR GUARDRAIL

END BENT #1 SHOWN, END BENT #2 SIMILAR.

SKETCH SHOWING POINTS OF ATTACHMENT

✳ DENOTES GUARDRAIL ANCHOR ASSEMBLY

PROJECT NO. 17BP.3.R.88

SAMPSON COUNTY

STATION: 13+50.00 -L-

NORTH CAROLINA PROFESSIONAL SEAL 040384 ENGINEER JEFFREY C. WILSON

DocuSigned by: Jeffrey C. Wilson 844D3D599F4642A... 6/14/2022

DOCUMENT NOT CONSIDERED FINAL UNLESS ALL SIGNATURES COMPLETED

STEWART

Firm License No. C-1051
223 S. West St,
Suite 1100
Raleigh, NC 27603
T 919.380.8750
www.stewartinc.com

STATE OF NORTH CAROLINA
DEPARTMENT OF TRANSPORTATION
RALEIGH

STANDARD
GUARDRAIL ANCHORAGE DETAILS
FOR VERTICAL CONCRETE BARRIER RAIL

REVISIONS						SHEET NO.
NO.	BY:	DATE:	NO.	BY:	DATE:	S-11
1			3			TOTAL SHEETS
2			4			19

ASSEMBLED BY :	JCW	DATE :	06/22
CHECKED BY :	DRR	DATE :	06/22
DRAWN BY : MAA	5/10	REV. 1/15	MAA/TMG
CHECKED BY : GM	5/10	REV. 12/17	MAA/THC
		REV. 5/18	MAA/THC

6/14/2022
...\17BP.3.R.88_SMU_GR_810123.dgn
USER:jwilson

(SHT 1) STD. NO. GRA3

NOTES

STIRRUPS IN CAP MAY BE SHIFTED AS NECESSARY TO CLEAR DOWELS.

THE CONCRETE IN THE SHADED AREA OF THE WING SHALL BE POURED AFTER THE VERTICAL CONCRETE BARRIER RAIL IS CAST IF SLIP FORMING IS USED.

FOR PILE SPLICE DETAILS, SEE SHEET 4 OF 4.

FOR WING DETAILS, SEE SHEET 3 OF 4.

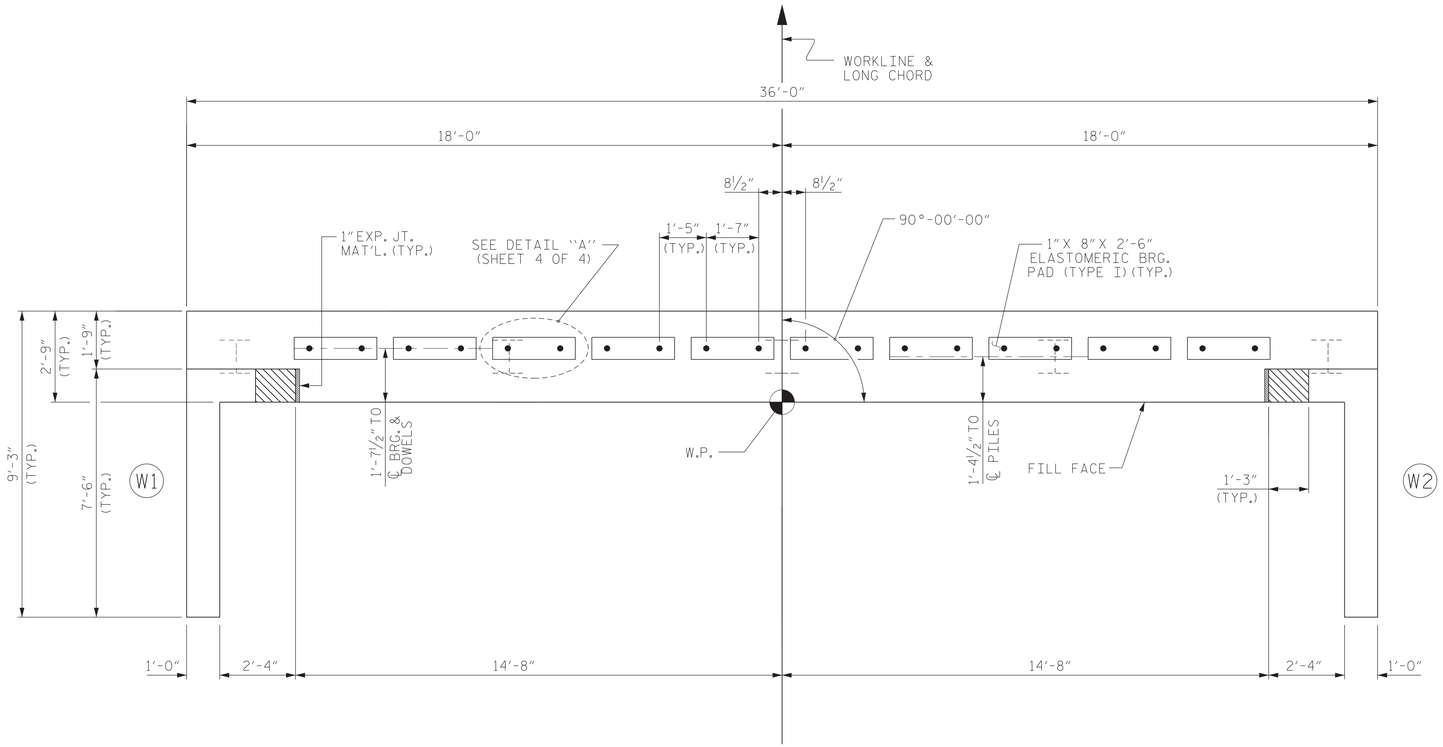

PLAN

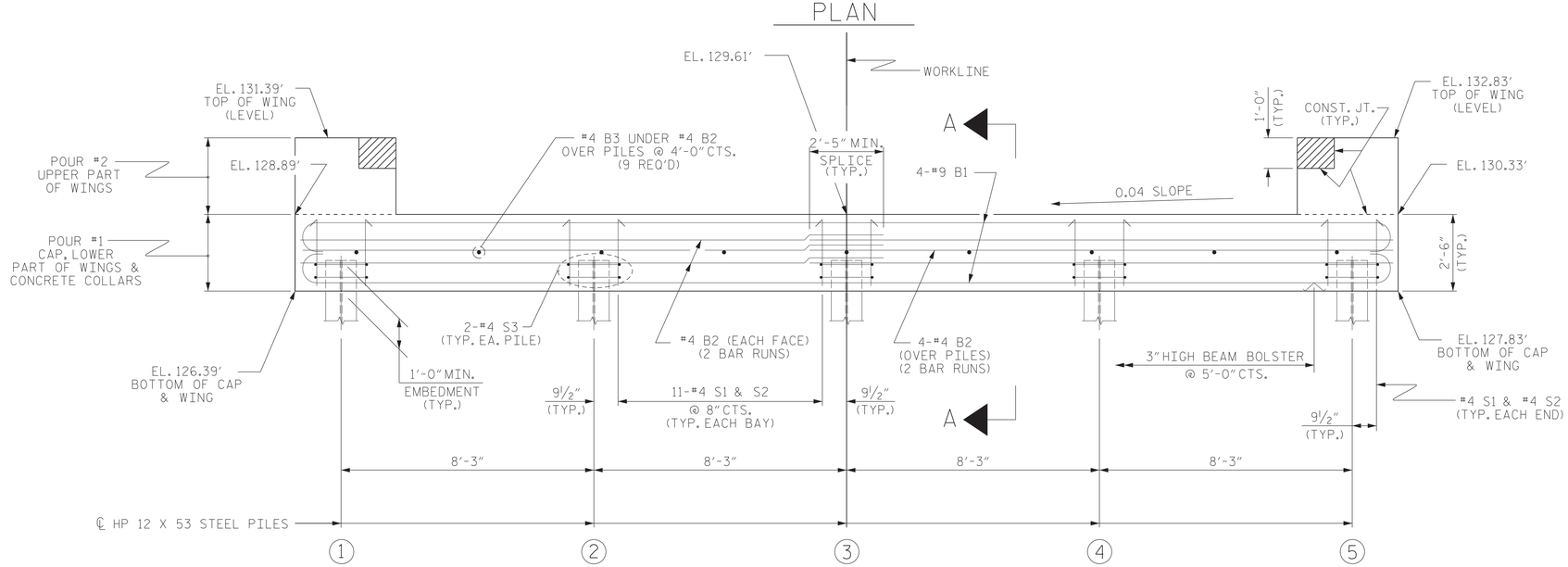

ELEVATION

WINGS NOT SHOWN FOR CLARITY.
FOR SECTION A-A, SEE SHEET 4 OF 4.
CONCRETE COLLARS FOR STEEL PILES NOT SHOWN IN PLAN AND ELEVATION VIEWS FOR CLARITY.
SEE "CORROSION PROTECTION FOR STEEL PILES DETAIL", SHEET 4 OF 4.

TOP OF PILE ELEVATIONS	
1	127.45'
2	127.78'
3	128.11'
4	128.44'
5	128.77'

NORTH CAROLINA PROFESSIONAL SEAL 040384 ENGINEER JEFFREY C. WILSON

DocuSigned by: Jeffrey C. Wilson 844D3D599F4642A... 6/14/2022

DOCUMENT NOT CONSIDERED FINAL UNLESS ALL SIGNATURES COMPLETED

STEWART
Firm License No. C-1051
223 S. West St,
Suite 1100
Raleigh, NC 27603
T 919.380.8750
www.stewartinc.com

PROJECT NO. 17BP.3.R.88
SAMPSON COUNTY
STATION: 13+50.00 -L-

SHEET 1 OF 4

STATE OF NORTH CAROLINA
DEPARTMENT OF TRANSPORTATION
RALEIGH

SUBSTRUCTURE
END BENT No. 1

REVISIONS						SHEET NO.
NO.	BY:	DATE:	NO.	BY:	DATE:	S-12
1			3			TOTAL SHEETS
2			4			19

ASSEMBLED BY :	JCW	DATE :	06/22
CHECKED BY :	DRR	DATE :	06/22
DRAWN BY : DGE	01/10	REV. 4/15	MAA/TMG
CHECKED BY : MKT	01/10		

6/14/2022
...\17BP.3.R.88_SMU_E1_810123.dgn
USER:jwilson

STD. NO. EB_30_90S

NOTES

STIRRUPS IN CAP MAY BE SHIFTED AS NECESSARY TO CLEAR DOWELS.

THE CONCRETE IN THE SHADED AREA OF THE WING SHALL BE POURED AFTER THE VERTICAL CONCRETE BARRIER RAIL IS CAST IF SLIP FORMING IS USED.

FOR PILE SPLICE DETAILS, SEE SHEET 4 OF 4.

FOR WING DETAILS, SEE SHEET 3 OF 4.

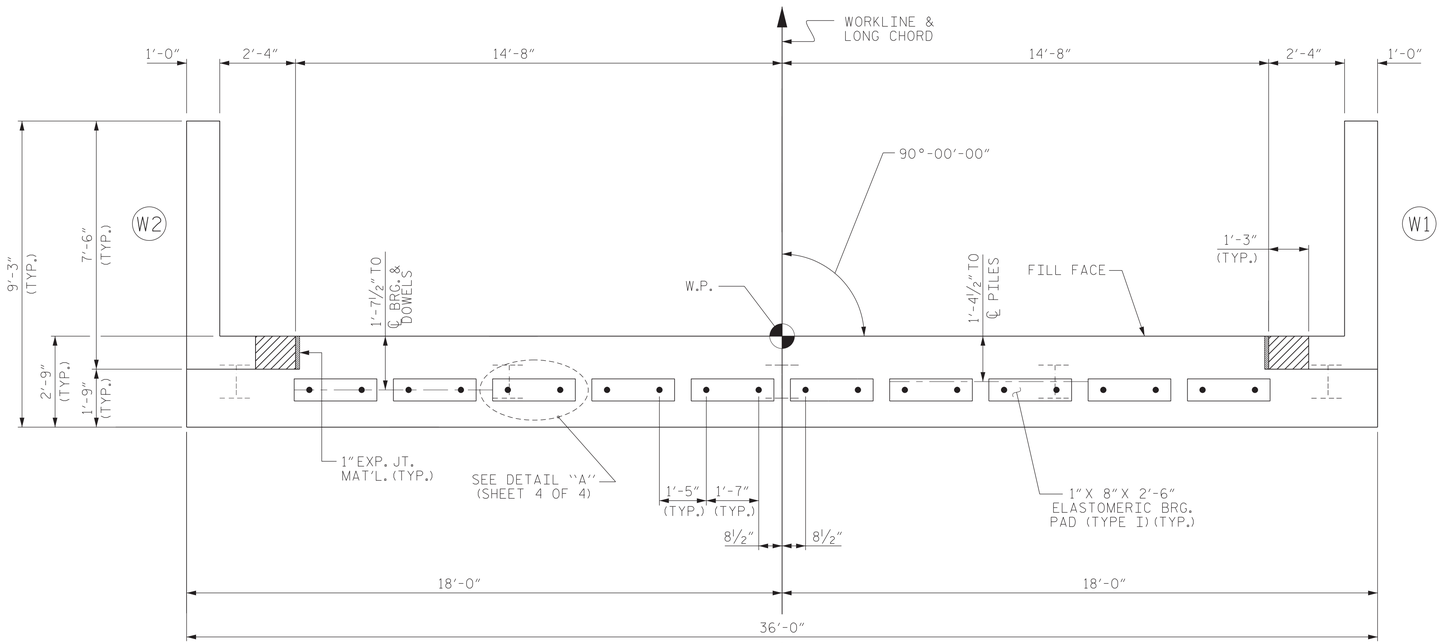

PLAN

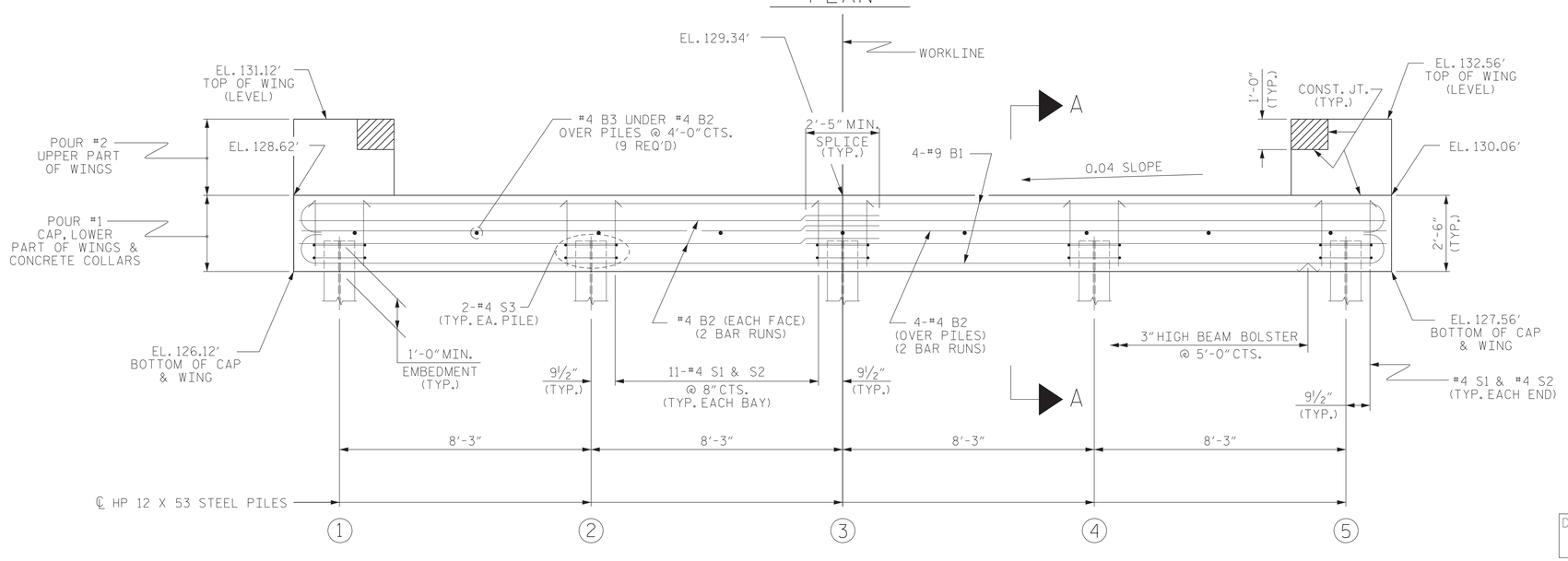

ELEVATION

WINGS NOT SHOWN FOR CLARITY.
FOR SECTION A-A, SEE SHEET 4 OF 4.
CONCRETE COLLARS FOR STEEL PILES NOT SHOWN IN PLAN AND ELEVATION VIEWS FOR CLARITY.
SEE "CORROSION PROTECTION FOR STEEL PILES DETAIL", SHEET 4 OF 4.

TOP OF PILE ELEVATIONS	
1	127.18'
2	127.51'
3	127.84'
4	128.17'
5	128.50'

NORTH CAROLINA PROFESSIONAL SEAL 040384 ENGINEER JEFFREY C. WILSON

DocuSigned by: Jeffrey C. Wilson 844D3D599F4642A... 6/14/2022

DOCUMENT NOT CONSIDERED FINAL UNLESS ALL SIGNATURES COMPLETED

STEWART
Firm License No. C-1051
223 S. West St,
Suite 1100
Raleigh, NC 27603
T 919.380.8750
www.stewartinc.com

PROJECT NO. 17BP.3.R.88
SAMPSON COUNTY
STATION: 13+50.00 -L-

SHEET 2 OF 4

STATE OF NORTH CAROLINA
DEPARTMENT OF TRANSPORTATION
RALEIGH

SUBSTRUCTURE
END BENT No. 2

ASSEMBLED BY : JCW	DATE : 06/22
CHECKED BY : DRR	DATE : 06/22
DRAWN BY : DGE 01/10	REV. 4/15 MAA/TMG
CHECKED BY : MKT 01/10	

REVISIONS						SHEET NO.
NO.	BY:	DATE:	NO.	BY:	DATE:	S-13
1			3			TOTAL SHEETS
2			4			19

STD. NO. EB_30_90S

6/14/2022
...\17BP.3.R.88_SMU_E2_810123.dgn
USER:jwilson

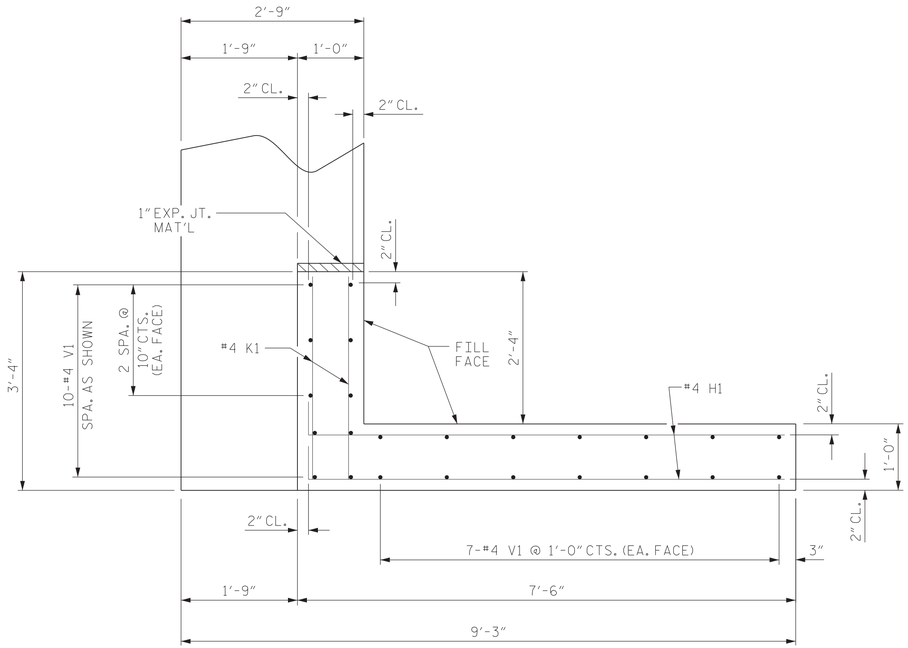

PLAN OF WING (W1)

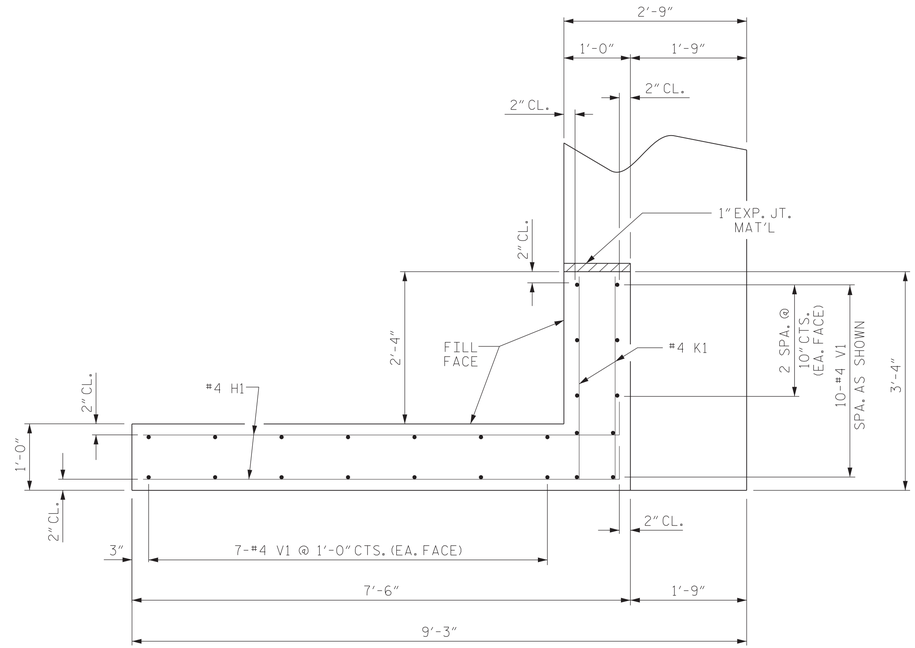

PLAN OF WING (W2)

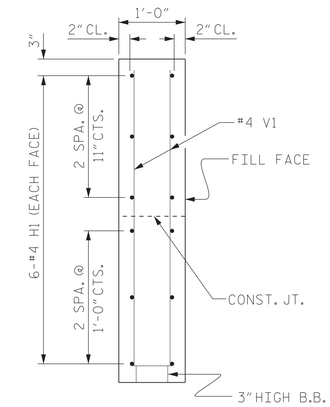

SECTION X-X

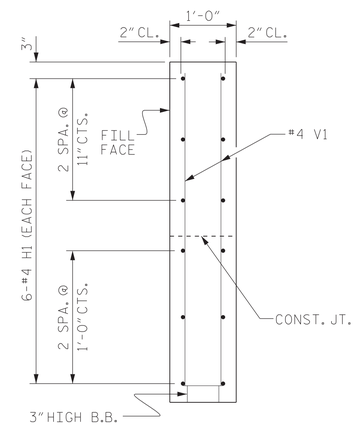

SECTION Y-Y

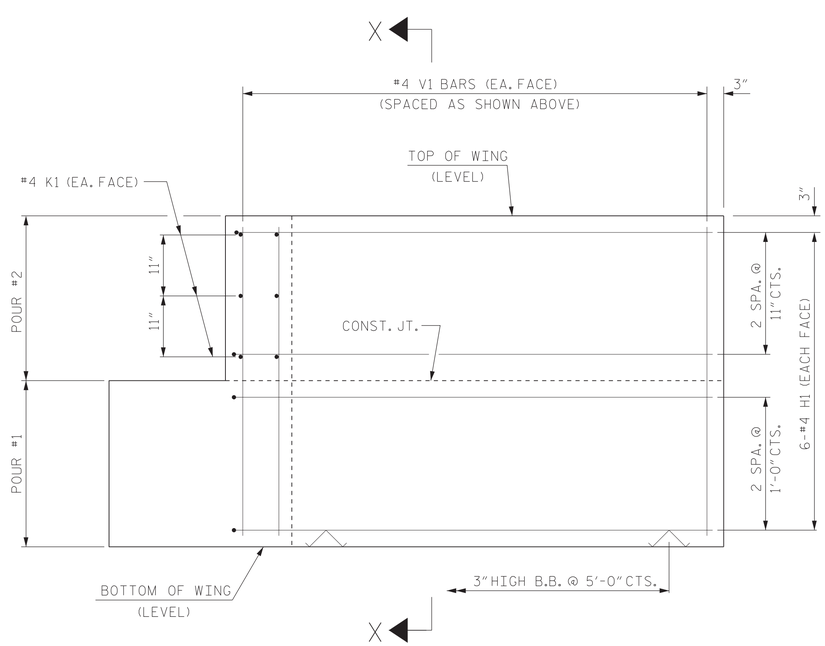

ELEVATION OF WING (W1)

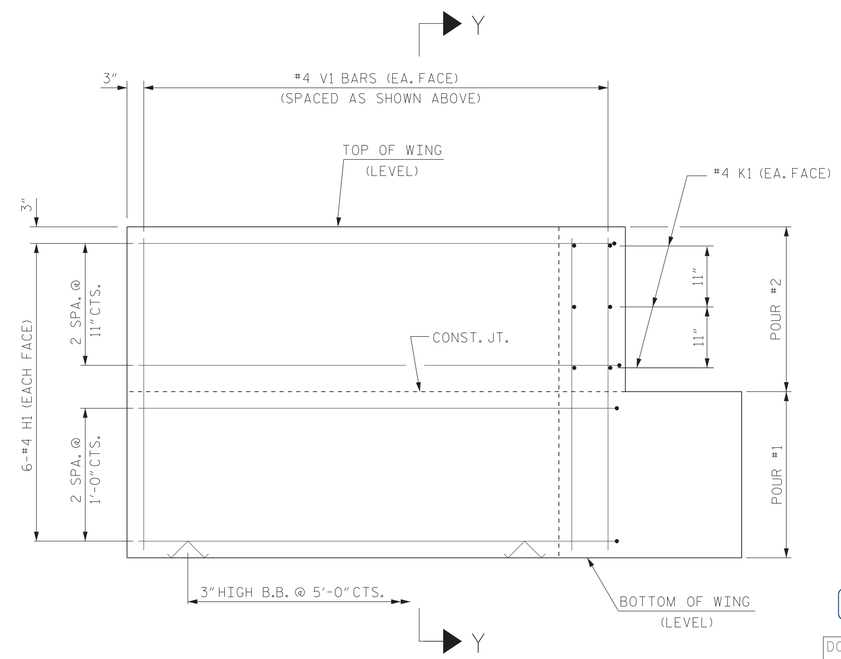

ELEVATION OF WING (W2)

WING DETAILS

PROJECT NO. 17BP.3.R.88

SAMPSON COUNTY

STATION: 13+50.00 -L-

SHEET 3 OF 4

NORTH CAROLINA PROFESSIONAL SEAL 040384 ENGINEER JEFFREY C. WILSON

DocuSigned by: Jeffrey C. Wilson 844D3D599F4642A... 6/14/2022

DOCUMENT NOT CONSIDERED FINAL UNLESS ALL SIGNATURES COMPLETED

STEWART

Firm License No. C-1051
223 S. West St,
Suite 1100
Raleigh, NC 27603
T 919.380.8750
www.stewartinc.com

STATE OF NORTH CAROLINA
DEPARTMENT OF TRANSPORTATION
RALEIGH

SUBSTRUCTURE

END BENT
WING DETAILS

REVISIONS							SHEET NO.
NO.	BY:	DATE:	NO.	BY:	DATE:		S-14
1			3				TOTAL SHEETS
2			4				19

ASSEMBLED BY :	JCW	DATE :	06/22
CHECKED BY :	DRR	DATE :	06/22
DRAWN BY : DGE	02/10	REV. 4/15	MAA/TMG
CHECKED BY : MKT	02/10		

STD. NO. EB_30_90S

6/14/2022
...\17BP.3.R.88_SMU_E3_810123.dgn
USER:jwilson

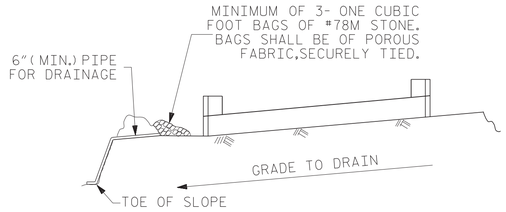

BAGGED STONE AND PIPE SHALL BE PLACED IMMEDIATELY AFTER COMPLETION OF END BENT EXCAVATION. PIPE MAY BE EITHER CONCRETE, CORRUGATED STEEL, CORRUGATED ALUMINUM ALLOY, OR CORRUGATED PLASTIC. PERFORATED PIPE WILL NOT BE ALLOWED.

BAGGED STONE SHALL REMAIN IN PLACE UNTIL THE ENGINEER DIRECTS THAT IT BE REMOVED. THE CONTRACTOR SHALL REMOVE AND DISPOSE OF SILT ACCUMULATIONS AT BAGGED STONE WHEN SO DIRECTED BY THE ENGINEER. BAGS SHALL BE REMOVED AND REPLACED WHENEVER THE ENGINEER DETERMINES THAT THEY HAVE DETERIORATED AND LOST THEIR EFFECTIVENESS.

NO SEPARATE PAYMENT WILL BE MADE FOR THIS WORK AND THE ENTIRE COST OF THIS WORK SHALL BE INCLUDED IN THE UNIT CONTRACT PRICE BID FOR THE SEVERAL PAY ITEMS.

TEMPORARY DRAINAGE AT END BENT

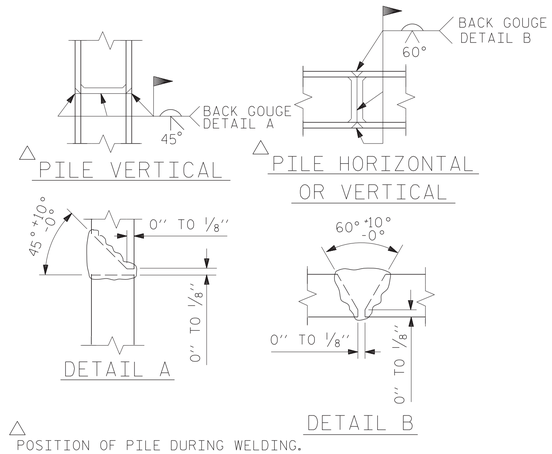

△ POSITION OF PILE DURING WELDING.

PILE SPLICE DETAILS

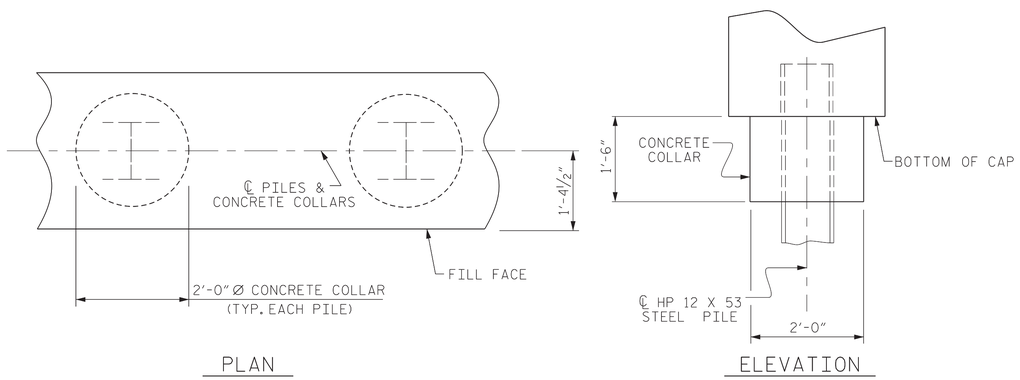

CORROSION PROTECTION FOR STEEL PILES DETAIL

(END BENT No. 1 SHOWN, END BENT No. 2 SIMILAR BY ROTATION)

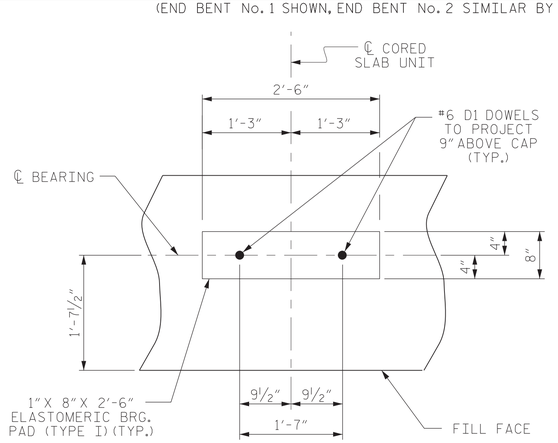

DETAIL "A"

(END BENT No. 1 SHOWN, END BENT No. 2 SIMILAR BY ROTATION)

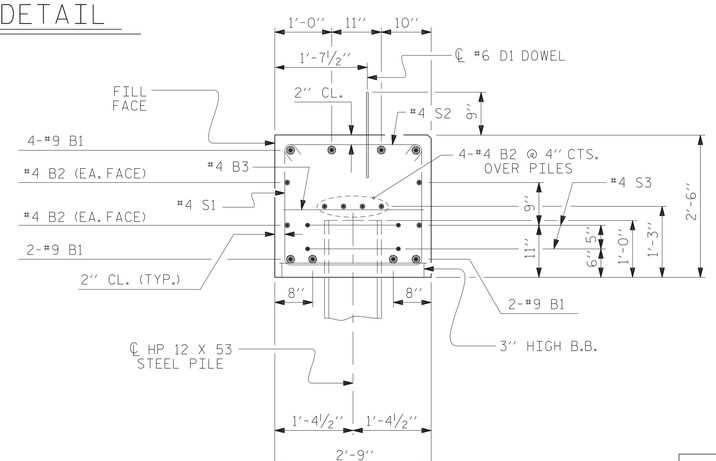

SECTION A-A

(CONCRETE COLLAR NOT SHOWN FOR CLARITY. SEE "CORROSION PROTECTION FOR STEEL PILES DETAIL.")

BAR TYPES

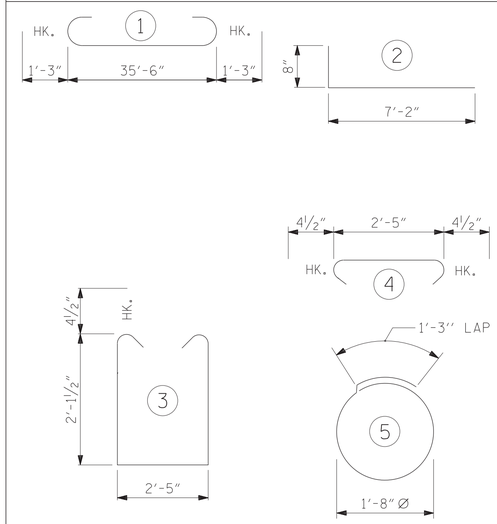

ALL BAR DIMENSIONS ARE OUT TO OUT.

END BENT No. 1	END BENT No. 2
HP 12 X 53 STEEL PILES NO: 5 LIN. FT.= 225	HP 12 X 53 STEEL PILES NO: 5 LIN. FT.= 250
PILE DRIVING EQUIPMENT SETUP FOR HP 12 X 53 STEEL PILES NO: 5	PILE DRIVING EQUIPMENT SETUP FOR HP 12 X 53 STEEL PILES NO: 5
PILE REDRIVES NO: 5	PILE REDRIVES NO: 5

BILL OF MATERIAL FOR ONE END BENT

BAR	NO.	SIZE	TYPE	LENGTH	WEIGHT
B1	8	#9	1	38'-0"	1034
B2	16	#4	STR	19'-1"	204
B3	9	#4	STR	2'-5"	15
D1	20	#6	STR	1'-6"	45
H1	24	#4	2	7'-10"	126
K1	12	#4	STR	2'-11"	23
S1	46	#4	3	7'-5"	228
S2	46	#4	4	3'-2"	97
S3	10	#4	5	6'-6"	43
V1	48	#4	STR	4'-8"	150

REINFORCING STEEL (FOR ONE END BENT) 1965 LBS.

CLASS A CONCRETE BREAKDOWN (FOR ONE END BENT)

POUR #1 CAP, LOWER PART OF WINGS & COLLARS 11.2 C.Y.

POUR #2 UPPER PART OF WINGS 1.8 C.Y.

TOTAL CLASS A CONCRETE 13.0 C.Y.

NORTH CAROLINA PROFESSIONAL SEAL 040384 ENGINEER JEFFREY C. WILSON

DocuSigned by: Jeffrey C. Wilson 844D3D599F4642A... 6/14/2022

DOCUMENT NOT CONSIDERED FINAL UNLESS ALL SIGNATURES COMPLETED

STEWART

Firm License No. C-1051
223 S. West St,
Suite 1100
Raleigh, NC 27603
T 919.380.8750
www.stewartinc.com

PROJECT NO. 17BP.3.R.88
SAMPSON COUNTY
STATION: 13+50.00 -L-

SHEET 4 OF 4

STATE OF NORTH CAROLINA
DEPARTMENT OF TRANSPORTATION
RALEIGH

SUBSTRUCTURE

END BENT No. 1 & 2 DETAILS

REVISIONS								SHEET NO.
NO.	BY:	DATE:	NO.	BY:	DATE:			S-15
1			3					TOTAL SHEETS
2			4					19

ASSEMBLED BY : JCW		DATE : 06/22	
CHECKED BY : DRR		DATE : 06/22	
DRAWN BY : DGE	12/09	REV. 4/17	MAA/THC
CHECKED BY : MKT	01/10		

6/14/2022
...\17BP.3.R.88_SMU_E4_810123.dgn
USER:jwilson

STD. NO. EB_30_90S

NOTES

STIRRUPS IN CAP MAY BE SHIFTED AS NECESSARY TO CLEAR DOWELS.

★ INVERT ALTERNATE STIRRUPS.

GALVANIZE THE TOP OF EACH INTERIOR BENT PILE A MINIMUM OF 26 FEET. GALVANIZE IN ACCORDANCE WITH SECTION 1076 OF THE STANDARD SPECIFICATIONS.

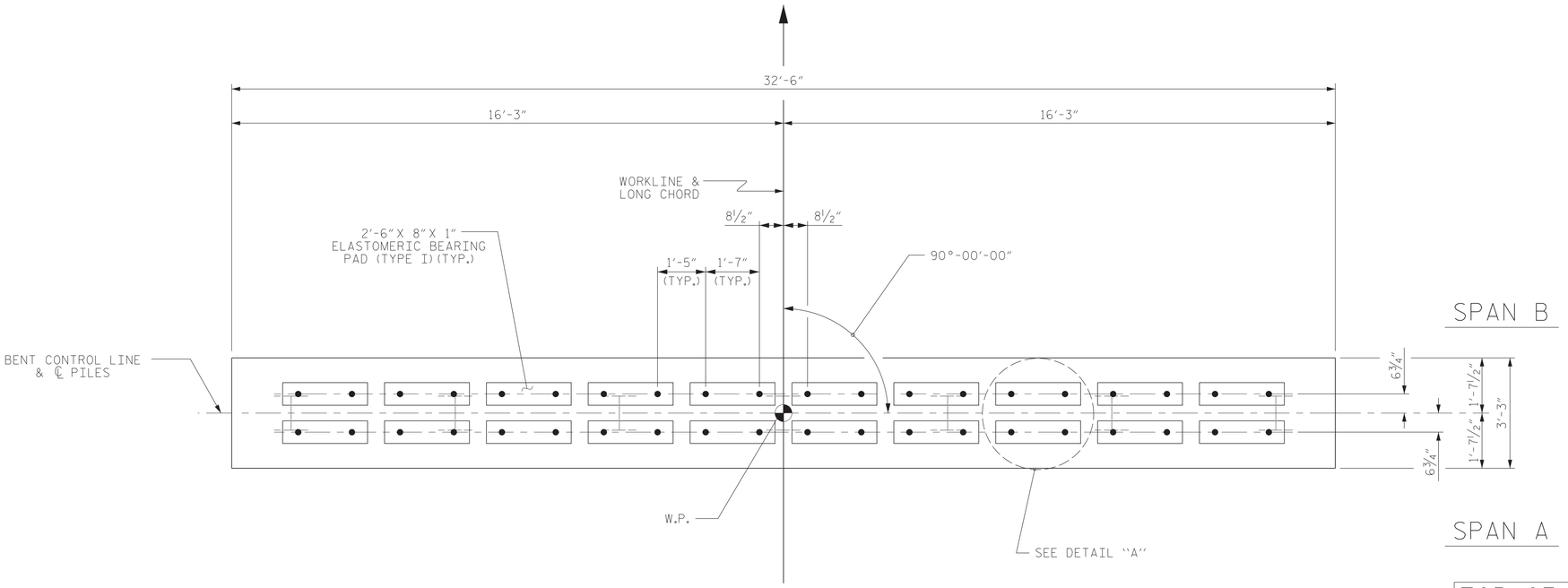

PLAN

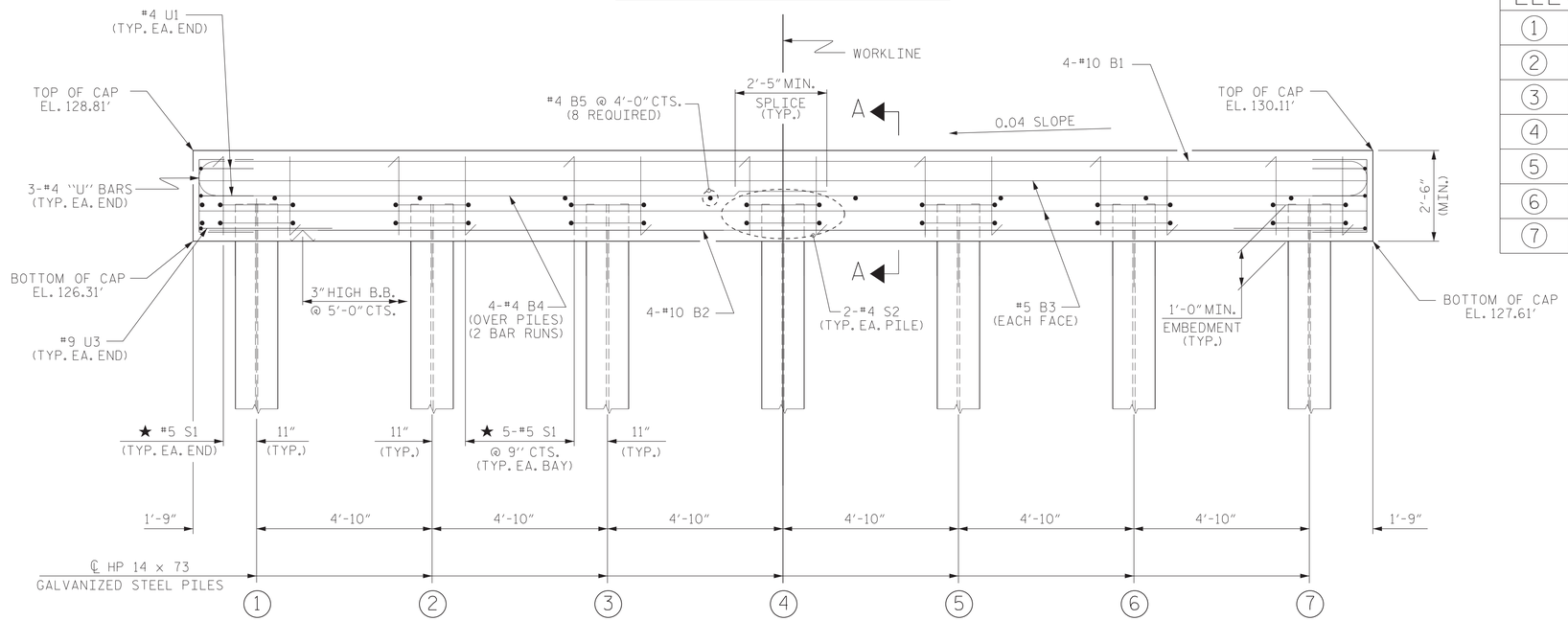

ELEVATION

FOR SECTION A-A, SEE SHEET 2 OF 2

TOP OF PILE ELEVATIONS	
1	127.38'
2	127.57'
3	127.77'
4	127.96'
5	128.15'
6	128.35'
7	128.54'

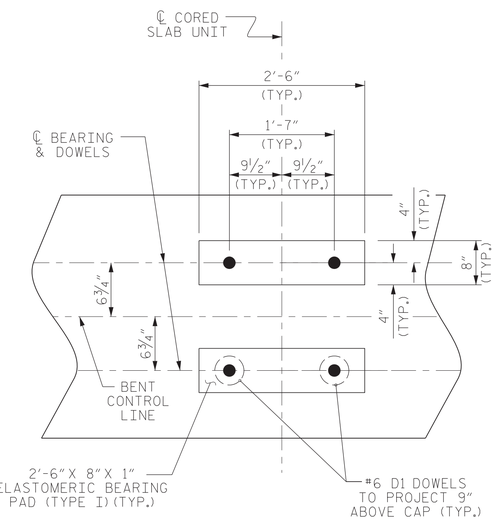

DETAIL "A"

(DIMENSIONS ARE TYPICAL EACH BEARING)

PROJECT NO. 17BP.3.R.88

SAMPSON COUNTY

STATION: 13+50.00 -L-

SHEET 1 OF 2

NORTH CAROLINA PROFESSIONAL SEAL 040384 ENGINEER JEFFREY C. WILSON

DocuSigned by: Jeffrey C. Wilson 844D3D559F4642A... 6/14/2022

DOCUMENT NOT CONSIDERED FINAL UNLESS ALL SIGNATURES COMPLETED

STATE OF NORTH CAROLINA
DEPARTMENT OF TRANSPORTATION
RALEIGH

SUBSTRUCTURE

BENT No. 1

STEWART

Firm License No. C-1051
223 S. West St,
Suite 1100
Raleigh, NC 27603
T 919.380.8750
www.stewartinc.com

REVISIONS						SHEET NO.
NO.	BY:	DATE:	NO.	BY:	DATE:	S-16
1			3			TOTAL SHEETS
2			4			19

ASSEMBLED BY :	JCW	DATE :	06/22
CHECKED BY :	DRR	DATE :	06/22
DRAWN BY : DGE 05/10	REV. 6/17	MAA/THC	
CHECKED BY : MKT 05/10			

6/14/2022
...\17BP.3.R.88_SMU_B1_810123.dgn
USER:jwilson

STD. NO. 14" HP_BT_30_90S_<60'

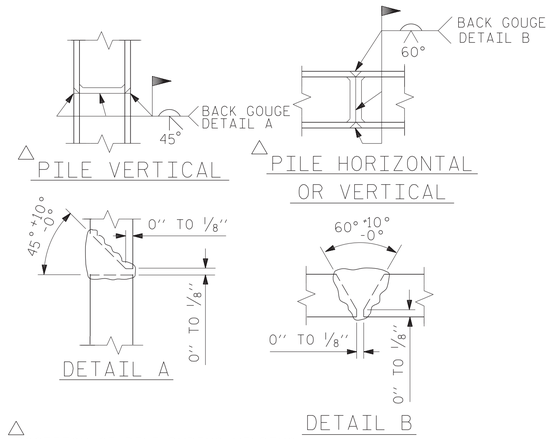

△ POSITION OF PILE DURING WELDING.

PILE SPLICE DETAILS

BAR TYPES

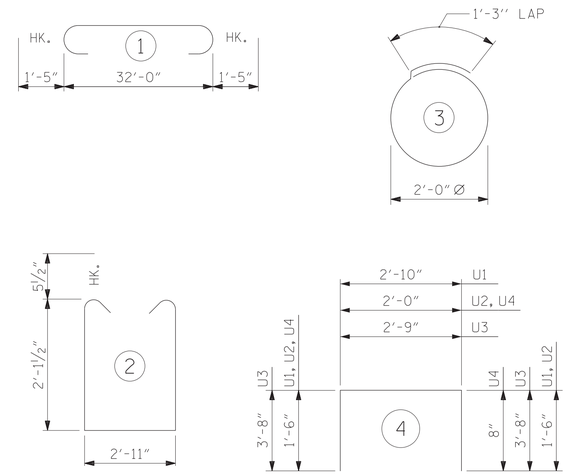

ALL BAR DIMENSIONS ARE OUT TO OUT.

BILL OF MATERIAL
FOR ONE BENT

BAR	NO.	SIZE	TYPE	LENGTH	WEIGHT
B1	4	#10	1	34'-10"	600
B2	4	#10	STR	32'-2"	554
B3	4	#5	STR	32'-2"	134
B4	8	#4	STR	17'-4"	93
B5	8	#4	STR	2'-11"	16
D1	40	#6	STR	1'-6"	90
S1	32	#5	2	8'-1"	270
S2	14	#4	3	7'-7"	71
U1	4	#4	4	5'-10"	16
U2	4	#4	4	5'-0"	13
U3	2	#9	4	10'-1"	69
U4	2	#4	4	4'-2"	6

REINFORCING STEEL (FOR ONE BENT) 1932 LBS

CLASS A CONCRETE BREAKDOWN (FOR ONE BENT)

TOTAL CLASS A CONCRETE 9.8 C.Y.

HP 14 X 73 GALVANIZED STEEL PILES (FOR ONE BENT)

No. 7 LIN. FT. 315

PILE DRIVING EQUIPMENT SETUP FOR HP 14 X 73 GALVANIZED STEEL PILES (FOR ONE BENT) NO: 7

PILE REDRIVES NO: 7

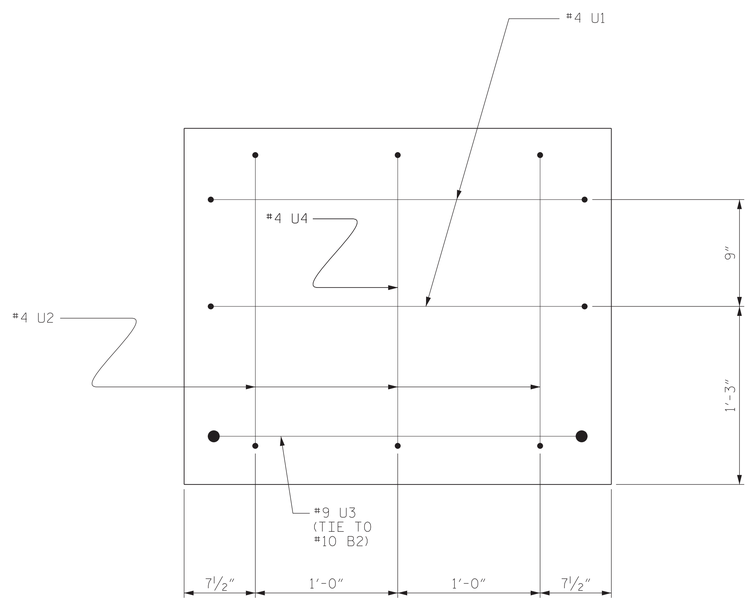

END OF CAP VIEW
(TYPICAL BOTH ENDS)

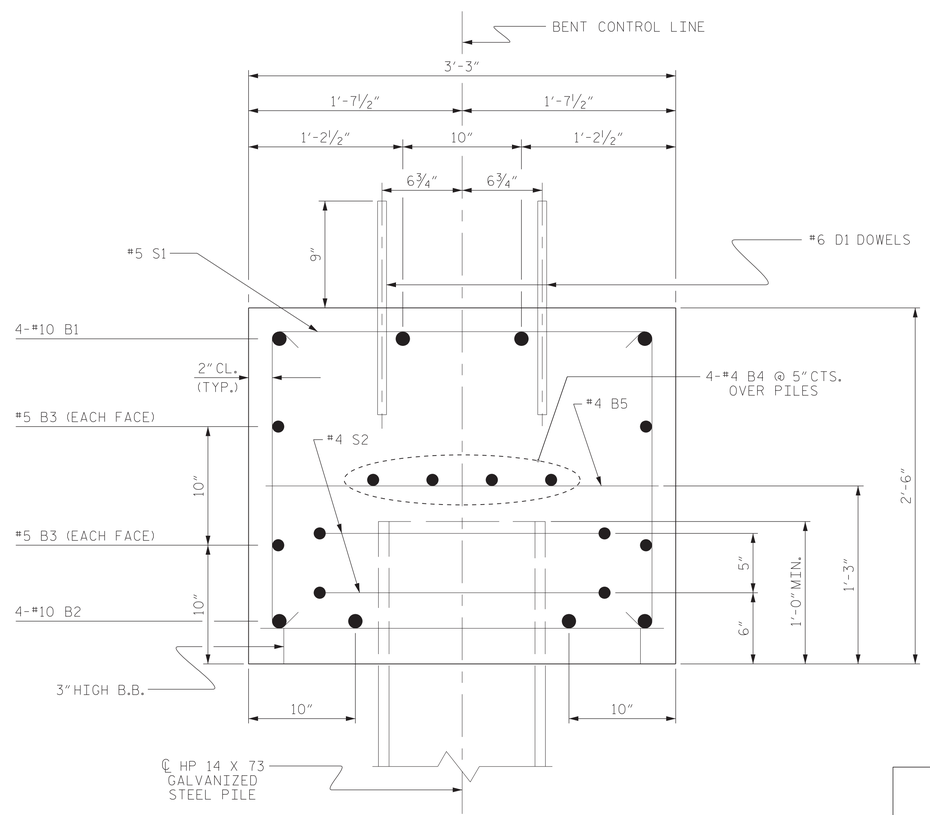

SECTION A-A

PROJECT NO. 17BP.3.R.88

SAMPSON COUNTY

STATION: 13+50.00 -L-

SHEET 2 OF 2

NORTH CAROLINA PROFESSIONAL SEAL 040384 ENGINEER JEFFREY C. WILSON

DocuSigned by: Jeffrey C. Wilson 844D3D599F4642A... 6/14/2022

DOCUMENT NOT CONSIDERED FINAL UNLESS ALL SIGNATURES COMPLETED

STATE OF NORTH CAROLINA
DEPARTMENT OF TRANSPORTATION
RALEIGH

SUBSTRUCTURE

BENT No. 1

STEWART

Firm License No. C-1051
223 S. West St,
Suite 1100
Raleigh, NC 27603
T 919.380.8750
www.stewartinc.com

REVISIONS						SHEET NO.
NO.	BY:	DATE:	NO.	BY:	DATE:	S-17
1			3			TOTAL SHEETS
2			4			19

ASSEMBLED BY :	JCW	DATE :	06/22
CHECKED BY :	DRR	DATE :	06/22
DRAWN BY : DGE 05/10	REV. 6/17	MAA/THC	
CHECKED BY : MKT 05/10			

6/14/2022
...\17BP.3.R.88_SMU_B2_810123.dgn
USER:jwilson

STD. NO. 14" HP_BT_30_90S_<60'

NOTES :

FOR BERM WIDTH DIMENSIONS, SEE GENERAL DRAWING.

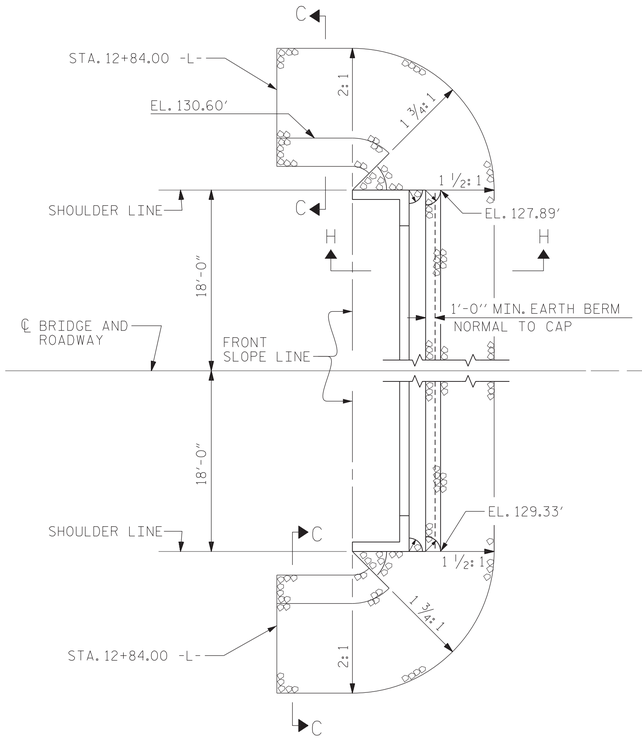

END BENT NO. 1

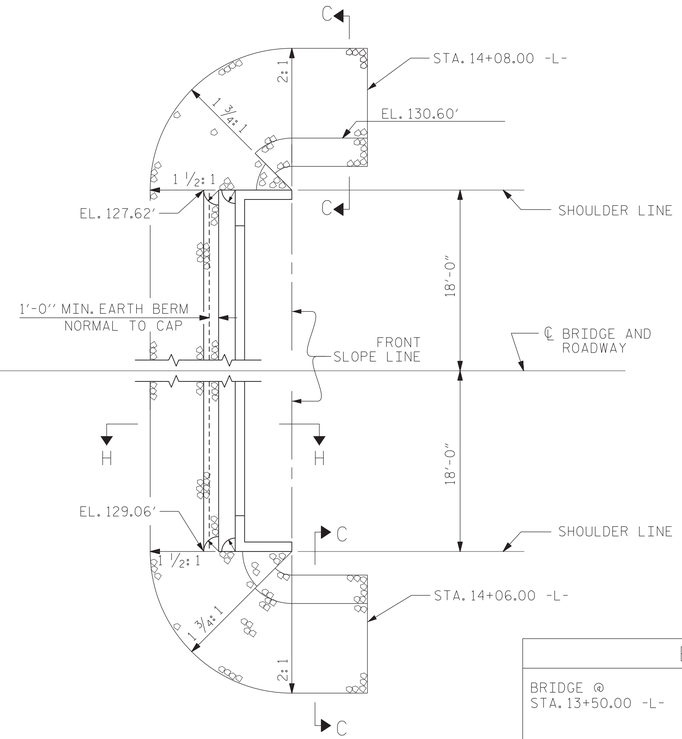

END BENT NO. 2

ESTIMATED QUANTITIES		
BRIDGE @ STA. 13+50.00 -L-	RIP RAP CLASS II (2'-0" THICK)	GEOTEXTILE FOR DRAINAGE
	TONS	SQUARE YARDS
END BENT 1	67	75
END BENT 2	48	53

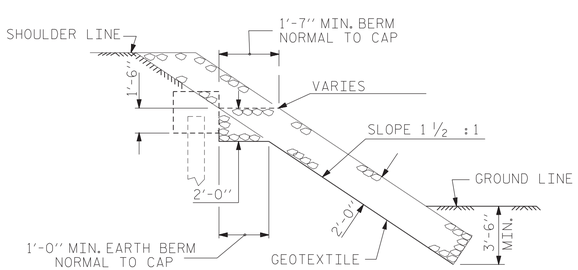

SECTION H-H

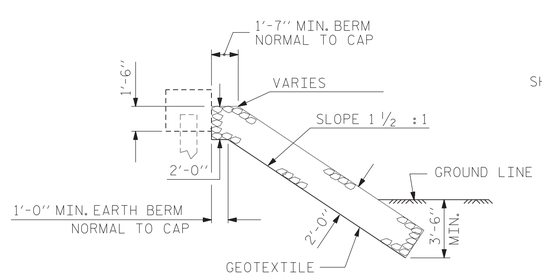

℄ SECTION

BERM RIP RAPPED

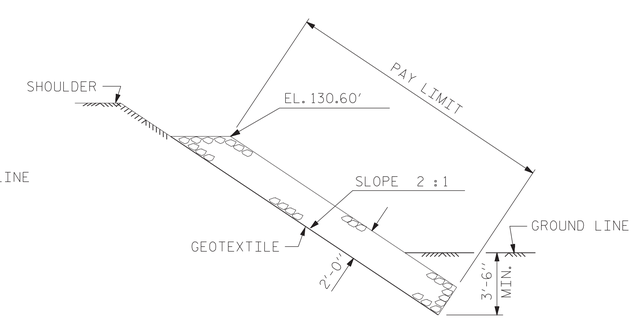

SECTION C-C

PROJECT NO. 17BP.3.R.88

SAMPSON COUNTY

STATION: 13+50.00 -L-

NORTH CAROLINA PROFESSIONAL SEAL 040384 ENGINEER JEFFREY C. WILSON

DocuSigned by: Jeffrey C. Wilson 844D3D599F4642A... 6/14/2022

DOCUMENT NOT CONSIDERED FINAL UNLESS ALL SIGNATURES COMPLETED

STEWART

Firm License No. C-1051
223 S. West St,
Suite 1100
Raleigh, NC 27603
T 919.380.8750
www.stewartinc.com

STATE OF NORTH CAROLINA
DEPARTMENT OF TRANSPORTATION
RALEIGH

STANDARD

RIP RAP DETAILS

REVISIONS						SHEET NO.
NO.	BY:	DATE:	NO.	BY:	DATE:	S-18
1			3			TOTAL SHEETS
2			4			19

ASSEMBLED BY :	JCW	DATE :	06/22
CHECKED BY :	DRR	DATE :	06/22
DRAWN BY : REK 1/84	REV. 10/1/11	MAA/GM	
CHECKED BY : RDU 1/84	REV. 12/21/11	MAA/GM	
	REV. 12/17	MAA/THC	

6/14/2022
...\17BP.3.R.88_SMU_RR_810123.dgn
USER:jwilson

STD. NO. RR1

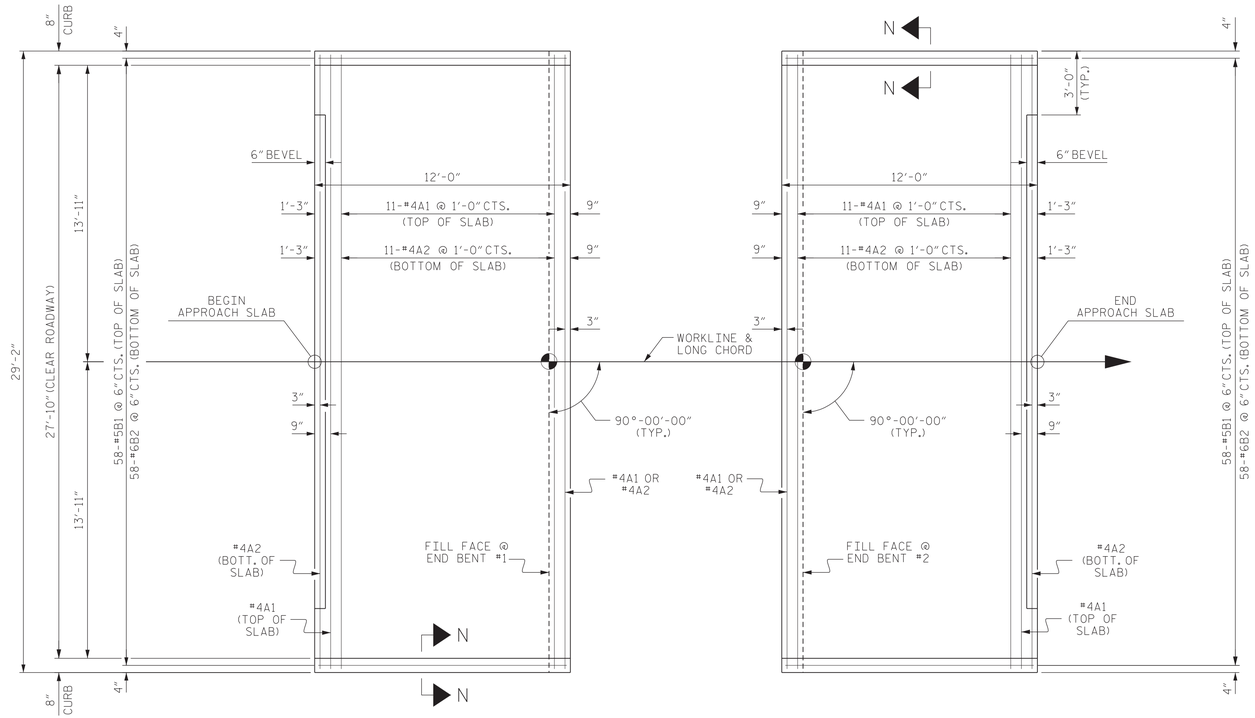

PLAN @ END BENT #1

PLAN @ END BENT #2

DIMENSIONS SHOWN ARE TYPICAL FOR BOTH APPROACH SLABS

NOTES

FOR BRIDGE APPROACH FILL INCLUDING GEOTEXTILE, 4"Ø DRAINAGE PIPE, AND SELECT MATERIAL BACKFILL, SEE ROADWAY PLANS.

GEOTEXTILE SHALL BE TYPE 1 IN ACCORDANCE WITH THE STANDARD SPECIFICATIONS SECTION 1056.

SELECT MATERIAL BACKFILL (CLASS V OR CLASS VI) SHALL BE IN ACCORDANCE WITH STANDARD SPECIFICATIONS SECTION 1016.

SELECT MATERIAL BACKFILL IS TO BE CONTINUOUS ALONG FILL FACE OF BACKWALL FROM OUTSIDE EDGE TO OUTSIDE EDGE OF APPROACH SLAB.

FOR THE 4"Ø DRAINAGE PIPE OUTLET(S), SEE ROADWAY STANDARD DRAWINGS.

AREA BETWEEN THE WINGWALL AND APPROACH SLAB SHALL BE GRADED TO DRAIN THE WATER AWAY FROM THE FILL FACE OF THE BRIDGE AND SHALL BE PAVED. SEE ROADWAY PLANS.

APPROACH SLAB GROOVING IS NOT REQUIRED.

BILL OF MATERIAL

APPROACH SLAB AT EB #1

BAR	NO.	SIZE	TYPE	LENGTH	WEIGHT
* A1	13	#4	STR	28'-10"	250
A2	13	#4	STR	28'-10"	250
* B1	58	#5	STR	11'-2"	676
B2	58	#6	STR	11'-8"	1016
REINFORCING STEEL				LBS.	1266
* EPOXY COATED REINFORCING STEEL				LBS.	926
CLASS AA CONCRETE				C. Y.	16.7

APPROACH SLAB AT EB #2

BAR	NO.	SIZE	TYPE	LENGTH	WEIGHT
* A1	13	#4	STR	28'-10"	250
A2	13	#4	STR	28'-10"	250
* B1	58	#5	STR	11'-2"	676
B2	58	#6	STR	11'-8"	1016
REINFORCING STEEL				LBS.	1266
* EPOXY COATED REINFORCING STEEL				LBS.	926
CLASS AA CONCRETE				C. Y.	16.7

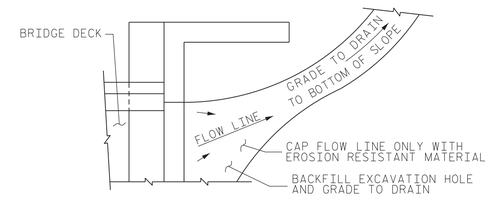

NOTE: IF THE APPROACH SLAB IS NOT CONSTRUCTED IMMEDIATELY AFTER THE BACKFILLING OF THE END BENT EXCAVATION, GRADE TO DRAIN TO THE BOTTOM OF THE SLOPE AND PROVIDE EROSION RESISTANT MATERIAL, SUCH AS FIBERGLASS ROVING OR AS DIRECTED BY THE ENGINEER TO PREVENT SOIL EROSION AND TO PROTECT THE AREA ADJACENT TO THE STRUCTURE. THE CONTRACTOR WILL BE REQUIRED TO REMOVE THESE MATERIALS PRIOR TO CONSTRUCTION OF THE APPROACH SLAB.

TEMPORARY DRAINAGE DETAIL

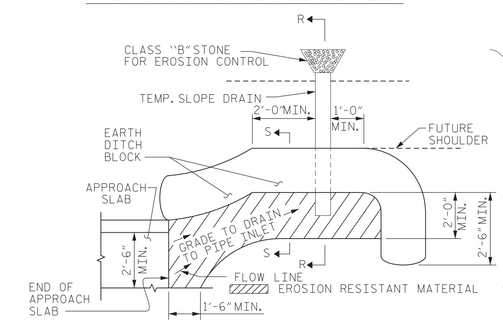

NOTE: IMMEDIATELY AFTER THE CONSTRUCTION OF THE APPROACH SLAB, THE CONTRACTOR SHALL PROVIDE TEMPORARY BERM AND SLOPE DRAIN. CONTRACTOR SHALL GRADE TO PIPE INLET AND PROVIDE EROSION RESISTANT MATERIAL AS SHOWN. THE EROSION RESISTANT MATERIAL SHALL BE EITHER 1) ASPHALT PLANT MIX, TYPE 1 OR TYPE 2, MIN. 2" DEPTH, 2) EROSION CONTROL MAT, OR 3) CONCRETE, AS DIRECTED BY THE ENGINEER. THE SLOPE DRAIN SHALL CONSIST OF A NON-PERFORATED TEMPORARY DRAINAGE PIPE, 12 INCHES IN DIAMETER.

PLAN VIEW

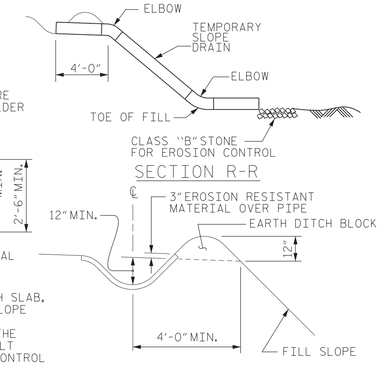

SECTION S-S

TEMPORARY BERM AND SLOPE DRAIN DETAILS

(TO BE USED WHEN SHOULDER BERM GUTTER IS REQUIRED)

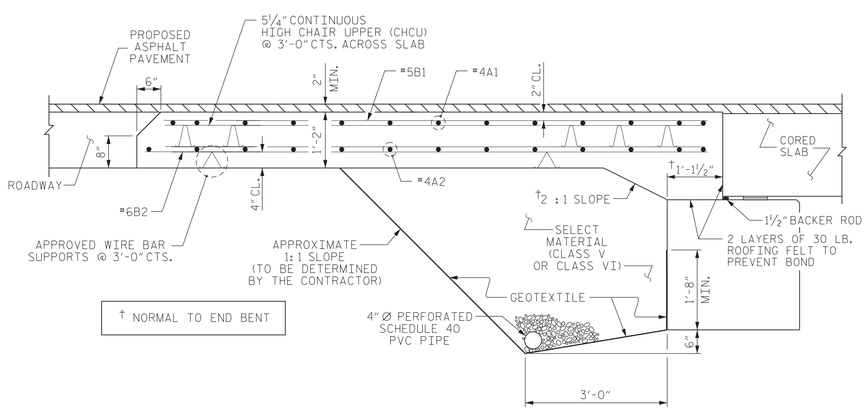

† NORMAL TO END BENT

SECTION THRU SLAB

(TYPE II - MODIFIED APPROACH FILL)

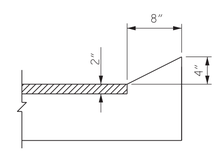

SECTION N-N

CURB DETAILS

SPLICE LENGTHS		
BAR SIZE	EPOXY COATED	UNCOATED
#4	1'-11"	1'-7"
#5	2'-5"	2'-0"
#6	3'-7"	2'-5"

NORTH CAROLINA PROFESSIONAL SEAL 040384 ENGINEER JEFFREY C. WILSON

DocuSigned by: Jeffrey C. Wilson 844D3D599F4642A... 6/14/2022

DOCUMENT NOT CONSIDERED FINAL UNLESS ALL SIGNATURES COMPLETED

PROJECT NO. 17BP.3.R.88

SAMPSON COUNTY

STATION: 13+50.00 -L-

STATE OF NORTH CAROLINA
DEPARTMENT OF TRANSPORTATION
RALEIGH

STANDARD
BRIDGE APPROACH SLAB
FOR PRESTRESSED CONCRETE
CORED SLAB UNIT
(SUB-REGIONAL TIER)
90° SKEW

STEWART
Firm License No. C-1051
223 S. West St,
Suite 1100
Raleigh, NC 27603
T 919.380.8750
www.stewartinc.com

REVISIONS							SHEET NO.
NO.	BY:	DATE:	NO.	BY:	DATE:		S-19
1			3				TOTAL SHEETS
2			4				19

ASSEMBLED BY :	JCW	DATE :	06/22
CHECKED BY :	DRR	DATE :	06/22
DRAWN BY : SHS/MAA 5-09	REV. 12-17	MAA/THC	
CHECKED BY : BCH 5-09	REV. 08-19	BNB/THC	

6/14/2022
...\17BP.3.R.88_SMU_AS_810123.dgn
USER:jwilson

STD. NO. BAS_30_90S

STANDARD NOTES

DESIGN DATA:

SPECIFICATIONS	A.A.S.H.T.O. (CURRENT)
LIVE LOAD	SEE PLANS
IMPACT ALLOWANCE	SEE A.A.S.H.T.O.
STRESS IN EXTREME FIBER OF STRUCTURAL STEEL - AASHTO M270 GRADE 36	20,000 LBS. PER SQ. IN.
- AASHTO M270 GRADE 50W	27,000 LBS. PER SQ. IN.
- AASHTO M270 GRADE 50	27,000 LBS. PER SQ. IN.
REINFORCING STEEL IN TENSION - GRADE 60	24,000 LBS. PER SQ. IN.
CONCRETE IN COMPRESSION	1,200 LBS. PER SQ. IN.
CONCRETE IN SHEAR	SEE A.A.S.H.T.O.
STRUCTURAL TIMBER - TREATED OR UNTREATED EXTREME FIBER STRESS	1,800 LBS. PER SQ. IN.
COMPRESSION PERPENDICULAR TO GRAIN OF TIMBER	375 LBS. PER SQ. IN.
EQUIVALENT FLUID PRESSURE OF EARTH	30 LBS. PER CU. FT. (MINIMUM)

MATERIAL AND WORKMANSHIP:

EXCEPT AS MAY OTHERWISE BE SPECIFIED ON PLANS OR IN THE SPECIAL PROVISIONS, ALL MATERIAL AND WORKMANSHIP SHALL BE IN ACCORDANCE WITH THE 2018 "STANDARD SPECIFICATIONS FOR ROADS AND STRUCTURES" OF THE N. C. DEPARTMENT OF TRANSPORTATION.

STEEL SHEET PILING FOR PERMANENT OR TEMPORARY APPLICATIONS SHALL BE HOT ROLLED.

CONCRETE:

UNLESS OTHERWISE REQUIRED ON PLANS, CLASS A CONCRETE SHALL BE USED FOR ALL PORTIONS OF ALL STRUCTURES WITH THE EXCEPTION THAT: CLASS AA CONCRETE SHALL BE USED IN BRIDGE SUPERSTRUCTURES, ABUTMENT BACKWALLS, AND APPROACH SLABS; AND CLASS B CONCRETE SHALL BE USED FOR SLOPE PROTECTION AND RIP RAP.

CONCRETE CHAMFERS:

UNLESS OTHERWISE NOTED ON THE PLANS, ALL EXPOSED CORNERS ON STRUCTURES SHALL BE CHAMFERED ¾" WITH THE FOLLOWING EXCEPTIONS: TOP CORNERS OF CURBS MAY BE ROUNDED TO 1½" RADIUS WHICH IS BUILT INTO CURB FORMS; CORNERS OF TRANSVERSE FLOOR EXPANSION JOINTS SHALL BE ROUNDED WITH A ¼" FINISHING TOOL UNLESS OTHERWISE REQUIRED ON PLANS; AND CORNERS OF EXPANSION JOINTS IN THE ROADWAY FACES AND TOPS OF CURBS AND SIDEWALKS SHALL BE ROUNDED TO A ¼" RADIUS WITH A FINISHING STONE OR TOOL UNLESS OTHERWISE REQUIRED ON PLANS.

DOWELS:

DOWELS WHEN INDICATED ON PLANS AS FOR CULVERT EXTENSIONS, SHALL BE EMBEDDED AT LEAST 12" INTO THE OLD CONCRETE AND GROUTED INTO PLACE WITH 1:2 CEMENT MORTAR.

ALLOWANCE FOR DEAD LOAD DEFLECTION, SETTLEMENT, ETC. IN CASTING SUPERSTRUCTURES:

BRIDGES SHALL BE BUILT ON THE GRADE OR VERTICAL CURVE SHOWN ON PLANS. SLABS, CURBS AND PARAPETS SHALL CONFORM TO THE GRADE OR CURVE.

ALL DIMENSIONS WHICH ARE GIVEN IN SECTION AND ARE AFFECTED BY DEAD LOAD DEFLECTIONS ARE DIMENSIONS AT CENTER LINE OF BEARING UNLESS OTHERWISE NOTED ON PLANS. IN SETTING FORMS FOR STEEL BEAM BRIDGES AND PRESTRESSED CONCRETE GIRDER BRIDGES, ADJUSTMENTS SHALL BE MADE DUE TO THE DEAD LOAD DEFLECTIONS FOR THE ELEVATIONS SHOWN. WHERE BLOCKS ARE SHOWN OVER BEAMS FOR BUILDING UP TO THE SLAB, THE VERTICAL DIMENSIONS OF THE BLOCKS SHALL BE ADJUSTED BETWEEN BEARINGS TO COMPENSATE FOR DEAD LOAD DEFLECTIONS, VERTICAL CURVE ORDINATE, AND ACTUAL BEAM CAMBER. WHERE BOTTOM OF SLAB IS IN LINE WITH BOTTOM OF TOP FLANGES, DEPTH OF SLAB BETWEEN BEARINGS SHALL BE ADJUSTED TO COMPENSATE FOR DEAD LOAD DEFLECTION, VERTICAL CURVE ORDINATE, AND ACTUAL BEAM CAMBER.

IN SETTING FALSEWORK AND FORMS FOR REINFORCED CONCRETE SPANS, AN ALLOWANCE SHALL BE MADE FOR DEAD LOAD DEFLECTIONS, SETTLEMENT OF FALSEWORK, AND PERMANENT CAMBER WHICH SHALL BE PROVIDED FOR IN ADDITION TO THE ELEVATIONS SHOWN. AFTER REMOVAL OF THE FALSEWORK, THE FINISHED STRUCTURES SHALL CONFORM TO THE PROFILE AND ELEVATIONS SHOWN ON THE PLANS AND CONSTRUCTION ELEVATIONS FURNISHED BY THE ENGINEER.

DETAILED DRAWINGS FOR FALSEWORK OR FORMS FOR BRIDGE SUPERSTRUCTURE AND ANY STRUCTURE OR PARTS OF A STRUCTURE AS NOTED ON THE PLANS SHALL BE SUBMITTED TO THE ENGINEER FOR APPROVAL BEFORE CONSTRUCTION OF THE FALSEWORK OR FORMS IS STARTED.

REINFORCING STEEL:

ALL REINFORCING STEEL SHALL BE DEFORMED. DIMENSIONS RELATIVE TO PLACEMENT OF REINFORCING ARE TO CENTERS OF BARS UNLESS OTHERWISE INDICATED IN THE PLANS. DIMENSIONS ON BAR DETAILS ARE TO CENTERS OF BARS OR ARE OUT TO OUT AS INDICATED ON PLANS.

WIRE BAR SUPPORTS SHALL BE PROVIDED FOR REINFORCING STEEL WHERE INDICATED ON THE PLANS. WHEN BAR SUPPORT PIECES ARE PLACED IN CONTINUOUS LINES, THEY SHALL BE SO PLACED THAT THE ENDS OF THE SUPPORTING WIRES SHALL BE LAPPED TO LOCK LEGS ON ADJOINING PIECES.

STRUCTURAL STEEL:

AT THE CONTRACTOR'S OPTION, HE MAY SUBSTITUTE ⅞" Ø SHEAR STUDS FOR THE ¾" Ø STUDS SPECIFIED ON THE PLANS. THIS SUBSTITUTION SHALL BE MADE AT THE RATE OF 3 - ⅞" Ø STUDS FOR 4 - ¾" Ø STUDS, AND STUD SPACING CHANGES SHALL BE MADE AS NECESSARY TO PROVIDE THE SAME EQUIVALENT NUMBER OF ⅞" Ø STUDS ALONG THE BEAM AS SHOWN FOR ¾" Ø STUDS BASED ON THE RATIO OF 3 - ⅞" Ø STUDS FOR 4 - ¾" Ø STUDS. STUDS OF THE LENGTH SPECIFIED ON THE PLANS MUST BE PROVIDED. THE MAXIMUM SPACING SHALL BE 2'-0".

EXCEPT AT THE INTERIOR SUPPORTS OF CONTINUOUS BEAMS WHERE THE COVER PLATE IS IN CONTACT WITH BEARING PLATE, THE CONTRACTOR MAY, AT HIS OPTION, SUBSTITUTE FOR THE COVER PLATES DESIGNATED ON THE PLANS COVER PLATES OF THE EQUIVALENT AREA PROVIDED THESE PLATES ARE AT LEAST 5/16" IN THICKNESS AND DO NOT EXCEED A WIDTH EQUAL TO THE FLANGE WIDTH LESS 2" OR A THICKNESS EQUAL TO 2 TIMES THE FLANGE THICKNESS. THE SIZE OF FILLET WELDS SHALL CONFORM TO THE REQUIREMENTS OF THE CURRENT ANSI/AASHTO/AWS "BRIDGE WELDING CODE". ELECTROSLAG WELDING WILL NOT BE PERMITTED.

WITH THE SOLE EXCEPTION OF EDGES AT SURFACES WHICH BEAR ON OTHER SURFACES, ALL SHARP EDGES AND ENDS OF SHAPES AND PLATES SHALL BE SLIGHTLY ROUNDED BY SUITABLE MEANS TO A RADIUS OF APPROXIMATELY 1/16 INCH OR EQUIVALENT FLAT SURFACE AT A SUITABLE ANGLE PRIOR TO PAINTING, GALVANIZING, OR METALLIZING.

HANDRAILS AND POSTS:

METAL STANDARDS AND FACES OF THE CONCRETE END POSTS FOR THE METAL RAIL SHALL BE SET NORMAL TO THE GRADE OF THE CURB, UNLESS OTHERWISE SHOWN ON PLANS. THE METAL RAIL AND TOPS OF CONCRETE POSTS USED WITH THE ALUMINUM RAIL SHALL BE BUILT PARALLEL TO THE GRADE OF THE CURB.

METAL HANDRAILS SHALL BE IN ACCORDANCE WITH THE PLANS. RAILS SHALL BE AS MANUFACTURED FOR BRIDGE RAILING. CASTINGS SHALL BE OF A UNIFORM APPEARANCE. FINS AND OTHER DEFORMATIONS RESULTING FROM CASTING OR OTHERWISE SHALL BE REMOVED IN A MANNER SO THAT A UNIFORM COLORING OF THE COMPLETED CASTING SHALL BE OBTAINED. CASTINGS WITH DISCOLORATIONS OR OF NON-UNIFORM COLORING WILL NOT BE ACCEPTED. CERTIFIED MILL REPORTS ARE REQUIRED FOR METAL RAILS AND POSTS.

SPECIAL NOTES:

GENERALLY, IN CASE OF DISCREPANCY, THIS STANDARD SHEET OF NOTES SHALL GOVERN OVER THE SPECIFICATIONS, BUT THE REMAINDER OF THE PLANS SHALL GOVERN OVER NOTES HEREON, AND SPECIAL PROVISIONS SHALL GOVERN OVER ALL. SEE SPECIFICATIONS ARTICLE 105-4.

ENGLISH

JANUARY, 1990