09/08/99

**PROJECT: 17BP.3.R.32**

**CONTRACT: DC0082**

See Sheet 1-A For Index of Sheets
See Sheet 1-B For Conventional Symbols

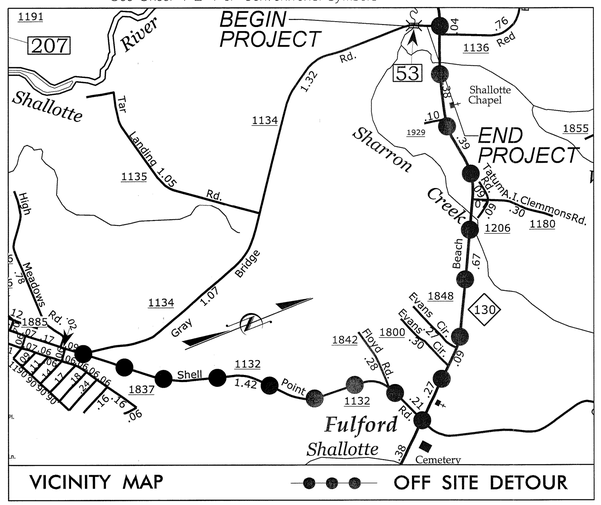


VICINITY MAP — OFF SITE DETOUR

NAD 83\11 NC GRID

STATE OF NORTH CAROLINA
DIVISION OF HIGHWAYS

# BRUNSWICK COUNTY

| STATE | STATE PROJECT REFERENCE NO. | SHEET NO. | TOTAL SHEETS |
|---|---|---|---|
| N.C. | 17BP.3.R.32 | 1 | |

| STATE PROJ. NO. | F. A. PROJ. NO. | DESCRIPTION |
|---|---|---|
| 17BP.3.R.32 | | LIB REPLACEMENT |

***LOCATION: BRIDGE NO. 53 OVER SHARRON CREEK ON SR 1134 (GRAY BRIDGE RD. SW)***

***TYPE OF WORK: GRADING, DRAINAGE, PAVING, & STRUCTURE***

**4**

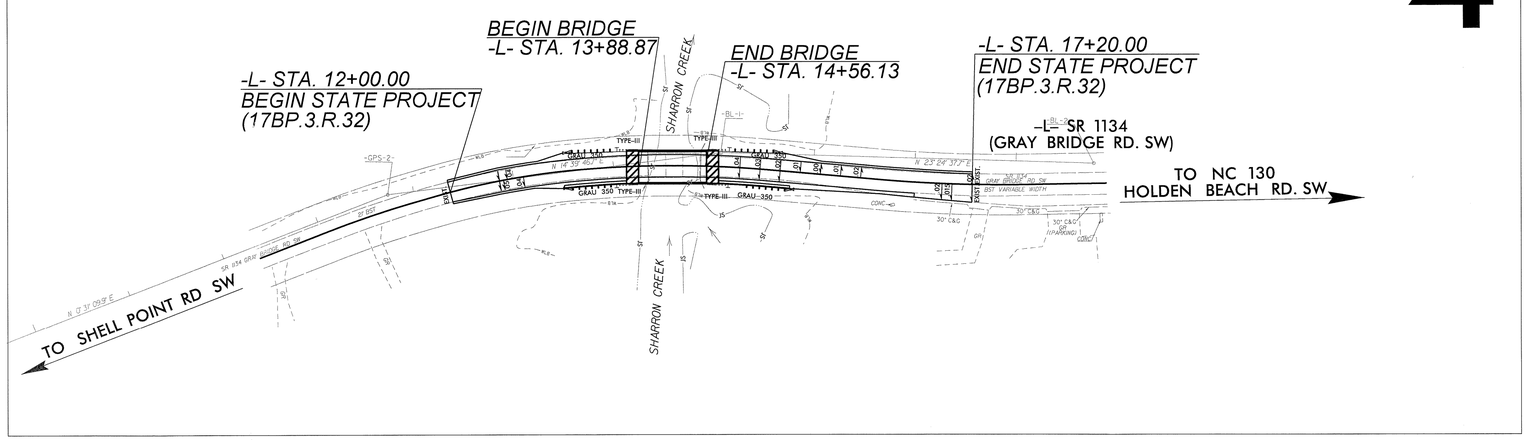


***GRAPHIC SCALES***

50′ 25′ 0 50′ 100′ — PLANS

50′ 25′ 0 50′ 100′ — PROFILE (HORIZONTAL)

10′ 5′ 0 10′ 20′ — PROFILE (VERTICAL)

***DESIGN DATA***

ADT 2008 = 1,600
ADT 2035 = N/A
K = N/A %
D = N/A %
T = N/A %
V = 45 MPH

FUNC CLASS = RURAL LOCAL
SUBREGIONAL TIER

***PROJECT LENGTH***

*LENGTH ROADWAY PROJECT 17BP.3.R.32 = 0.085 Miles*
*TOTAL STRUCTURE PROJECT 17BP.3.R.32 = 0.013 Miles*
*TOTAL LENGTH STATE PROJECT 17BP.3.R.32 = 0.098 Miles*

*Prepared In the Office of:*

LOCHNER
H. W. LOCHNER, INC.
2840 PLAZA PLACE, SUITE 202
RALEIGH, NC 27612
NC License Number F-0159

ECOLOGICAL ENGINEERING
NC FIRM LICENSE No: F-1148
1151 SE Cary Parkway
Suite 101
Cary, NC 27518
(919) 557-0929

*2012 STANDARD SPECIFICATIONS*

*RIGHT OF WAY DATE:* MARCH 31, 2014

*LETTING DATE:* OCTOBER 23, 2014

BRIAN K. EASON, PE
*PROJECT ENGINEER*

WILLIAM C. BOLLMAN
*PROJECT DESIGN ENGINEER*

AMANDA GLYNN, PE
*NCDOT CONTACT*

***HYDRAULICS ENGINEER***

NORTH CAROLINA PROFESSIONAL SEAL 20147 ENGINEER FRANK F. FLEMING

SIGNATURE: P.E. 9/18/14

***ROADWAY DESIGN ENGINEER***

NORTH CAROLINA PROFESSIONAL SEAL 25523 ENGINEER BRIAN K. EASON

SIGNATURE: Brian K Eason P.E. 9/18/14

STATE OF NORTH CAROLINA · DEPARTMENT OF TRANSPORTATION ·

SYTIME
R:\Roadway\Proj\090053_Rdy_tsh.dgn
$$$$USERNAME$$$$

8/17/99

**LOCHNER**
H. W. LOCHNER, INC.
2840 PLAZA PLACE, SUITE 202
RALEIGH, NC 27612
NC License Number F-0159

| PROJECT REFERENCE NO. | SHEET NO. |
|---|---|
| 17BP.3.R.32 | 1-A |

ROADWAY DESIGN ENGINEER

NORTH CAROLINA PROFESSIONAL SEAL 25523 ENGINEER BRIAN K. LASON
9/9/14

INDEX OF SHEETS

| SHEET NUMBER | SHEET |
|---|---|
| 1 | TITLE SHEET |
| 1-A | INDEX OF SHEETS, GENERAL NOTES, LIST OF STANDARD DRAWINGS, AND CENTERLINE COORDINATE LIST |
| 1-B | CONVENTIONAL SYMBOLS |
| 2 | PAVEMENT SCHEDULE, TYPICAL SECTIONS, AND WEDGING DETAILS |
| 2-A | ROCK PLATING DETAIL, GEOTEXTILE OVERLAP DETAIL |
| 3 | SUMMARY OF DRAINAGE QUANTITIES<br>SUMMARY OF GUARDRAIL, EARTHWORK SUMMARY, AND ASPHALT PAVEMENT REMOVAL SUMMARY |
| 4 | PLAN / PROFILE SHEET |
| TMP-1 THRU TMP-2 | TRANSPORTATION MANAGEMENT PLAN |
| TMP-3 | SIGN DESIGN PLANS |
| EC-1 THRU EC-3 | EROSION CONTROL PLANS |
| X-A THRU X-3 | CROSS-SECTIONS |
| S-1 THRU S-15 | STRUCTURE PLANS |

EFF. 01-17-2012
REV. 10-30-2012

2012 ROADWAY ENGLISH STANDARD DRAWINGS

The following Roadway Standards as appear in "Roadway Standard Drawings" Highway Design Branch - N. C. Department of Transportation - Raleigh, N. C., Dated January, 2012 are applicable to this project and by reference hereby are considered a part of these plans:

| STD.NO. | TITLE |
|---|---|
| DIVISION 2 - EARTHWORK | |
| 200.02 | Method of Clearing - Method II |
| 225.02 | Guide for Grading Subgrade - Secondary and Local |
| 225.04 | Method of Obtaining Superelevation - Two Lane Pavement |
| DIVISION 3 - PIPE CULVERTS | |
| 300.01 | Method of Pipe Installation |
| DIVISION 4 - MAJOR STRUCTURES | |
| 422.10 | Reinforced Bridge Approach Fills |
| DIVISION 5 - SUBGRADE, BASES AND SHOULDERS | |
| 560.01 | Method of Shoulder Construction - High Side of Superelevated Curve - Method I |
| DIVISION 8 - INCIDENTALS | |
| 840.25 | Anchorage for Frames - Brick or Concrete or Precast |
| 840.29 | Frames and Narrow Slot Flat Grates |
| 840.35 | Traffic Bearing Grated Drop Inlet - for Cast Iron Double Frame and Grates |
| 846.01 | Concrete Curb, Gutter and Curb & Gutter |
| 846.04 | Drop Inlet Installation in Shoulder Berm Gutter |
| 862.01 | Guardrail Placement |
| 862.02 | Guardrail Installation |
| 862.03 | Structure Anchor Units (Details in Lieu of Standard Drawing as March 2013 Letting) |
| 876.02 | Guide for Rip Rap at Pipe Outlets |

GENERAL NOTES:

2012 SPECIFICATIONS
EFFECTIVE: 01-17-2012
REVISED: 07-30-2012

GRADE LINE:

GRADING AND SURFACING:
THE GRADE LINES SHOWN DENOTE THE FINISHED ELEVATION OF THE PROPOSED SURFACING AT GRADE POINTS SHOWN ON THE TYPICAL SECTIONS. GRADE LINES MAY BE ADJUSTED AT THEIR BEGINNING AND ENDING AND AT STRUCTURES AS DIRECTED BY THE ENGINEER IN ORDER TO SECURE A PROPER TIE-IN.

CLEARING:
CLEARING ON THIS PROJECT SHALL BE PERFORMED TO THE LIMITS ESTABLISHED BY METHOD II.

SUPERELEVATION:
ALL CURVES ON THIS PROJECT SHALL BE SUPERELEVATED IN ACCORDANCE WITH STD. NO. 225.04 USING THE RATE OF SUPERELEVATION AND RUNOFF SHOWN ON THE PLANS. SUPERELEVATION IS TO BE REVOLVED ABOUT THE GRADE POINTS SHOWN ON THE TYPICAL SECTIONS.

SHOULDER CONSTRUCTION:
ASPHALT, EARTH, AND CONCRETE SHOULDER CONSTRUCTION ON THE HIGH SIDE OF SUPERELEVATED CURVES SHALL BE IN ACCORDANCE WITH STD. NO. 560.01.

GUARDRAIL:
THE GUARDRAIL LOCATIONS SHOWN ON THE PLANS MAY BE ADJUSTED DURING CONSTRUCTION AS DIRECTED BY THE ENGINEER. THE CONTRACTOR SHOULD CONSULT WITH THE ENGINEER PRIOR TO ORDERING GUARDRAIL MATERIAL.

END BENTS:
THE ENGINEER SHALL CHECK THE STRUCTURE END BENT PLANS, DETAILS, AND CROSS-SECTION PRIOR TO SETTING OF THE SLOPE STAKES FOR THE EMBANKMENT OR EXCAVATION APPROACHING A BRIDGE.

UTILITIES:
UTILITY OWNERS ON THIS PROJECT ARE: THE TOWN OF SHALLOTTE, BRUNSWICK COUNTY ATMC, AND BRUNSWICK EMC. ANY RELOCATION OF EXISTING UTILITIES WILL BE ACCOMPLISHED BY OTHERS, EXCEPT AS SHOWN ON THE PLANS.

RIGHT-OF-WAY MARKERS:
ALL RIGHT-OF-WAY MARKERS ON THIS PROJECT SHALL BE PLACED BY CONTRACTOR.

## *CENTERLINE COORDINATE LIST*

| POINT NO. | SURVEY LINE | STATION | NORTHING (Y) | EASTING (X) |
|---|---|---|---|---|
| 1 | -L- | 10+00.00 | 82,667.946 | 2,194,545.393 |
| 2 | -L- | 10+50.00 | 82,717.944 | 2,194,545.817 |
| 3 | -L- | 11+00.00 | 82,767.935 | 2,194,546.645 |
| 4 | -L- | 11+50.00 | 82,817.839 | 2,194,549.655 |
| 5 | -L- | 12+00.00 | 82,867.579 | 2,194,554.729 |
| 6 | -L- | 12+50.00 | 82,916.964 | 2,194,562.487 |
| 7 | -L- | 13+00.00 | 82,965.715 | 2,194,573.552 |
| 8 | -L- | 13+50.00 | 83,013.667 | 2,194,587.694 |
| 9 | -L- | 14+00.00 | 83,060.881 | 2,194,604.138 |
| 10 | -L- | 14+50.00 | 83,107.275 | 2,194,622.769 |
| 11 | -L- | 15+00.00 | 83,152.748 | 2,194,643.547 |
| 12 | -L- | 15+50.00 | 83,197.449 | 2,194,665.947 |
| 13 | -L- | 16+00.00 | 83,242.097 | 2,194,688.454 |
| 14 | -L- | 16+50.00 | 83,286.828 | 2,194,710.794 |
| 15 | -L- | 17+00.00 | 83,332.205 | 2,194,731.786 |
| 16 | -L- | 17+50.00 | 83,378.289 | 2,194,751.179 |
| 17 | -L- | 18+00.00 | 83,424.966 | 2,194,769.098 |
| 18 | -L- | 18+50.00 | 83,471.746 | 2,194,786.752 |
| 19 | -L- | 18+53.28 | 83,474.815 | 2,194,787.910 |

18-SEP-2014 10:16
C:\Projects\17BP.3.R.32\930853.Rdy_typ.dgn
$$$$USERNAME$$$$

12/05/11

***Note: Not to Scale***

****S.U.E. = Subsurface Utility Engineering***

STATE OF NORTH CAROLINA
DIVISION OF HIGHWAYS

# CONVENTIONAL PLAN SHEET SYMBOLS

| PROJECT REFERENCE NO. | SHEET NO. |
|---|---|
| 17BP.3.R.32 | 1B |

## *BOUNDARIES AND PROPERTY:*

- State Line
- County Line
- Township Line
- City Line
- Reservation Line
- Property Line
- Existing Iron Pin — EIP
- Property Corner
- Property Monument — ECM
- Parcel/Sequence Number — 23
- Existing Fence Line
- Proposed Woven Wire Fence
- Proposed Chain Link Fence
- Proposed Barbed Wire Fence
- Existing Wetland Boundary — WLB
- Proposed Wetland Boundary — WLB
- Existing Endangered Animal Boundary — EAB
- Existing Endangered Plant Boundary — EPB
- Known Soil Contamination: Area or Site
- Potential Soil Contamination: Area or Site

## *BUILDINGS AND OTHER CULTURE:*

- Gas Pump Vent or U/G Tank Cap
- Sign — S
- Well — W
- Small Mine
- Foundation
- Area Outline
- Cemetery
- Building
- School
- Church
- Dam

## *HYDROLOGY:*

- Stream or Body of Water
- Hydro, Pool or Reservoir
- Jurisdictional Stream — JS
- Buffer Zone 1 — BZ 1
- Buffer Zone 2 — BZ 2
- Flow Arrow
- Disappearing Stream
- Spring
- Wetland
- Proposed Lateral, Tail, Head Ditch — FLOW
- False Sump

## *RAILROADS:*

- Standard Gauge — CSX TRANSPORTATION
- RR Signal Milepost — MILEPOST 35
- Switch — SWITCH
- RR Abandoned
- RR Dismantled

## *RIGHT OF WAY:*

- Baseline Control Point
- Existing Right of Way Marker
- Existing Right of Way Line
- Proposed Right of Way Line — RW
- Proposed Right of Way Line with Iron Pin and Cap Marker — RW
- Proposed Right of Way Line with Concrete or Granite R/W Marker — RW
- Proposed Control of Access Line with Concrete C/A Marker — CA
- Existing Control of Access — CA
- Proposed Control of Access — CA
- Existing Easement Line — E
- Proposed Temporary Construction Easement — E
- Proposed Temporary Drainage Easement — TDE
- Proposed Permanent Drainage Easement — PDE
- Proposed Permanent Drainage / Utility Easement — DUE
- Proposed Permanent Utility Easement — PUE
- Proposed Temporary Utility Easement — TUE
- Proposed Aerial Utility Easement — AUE
- Proposed Permanent Easement with Iron Pin and Cap Marker

## *ROADS AND RELATED FEATURES:*

- Existing Edge of Pavement
- Existing Curb
- Proposed Slope Stakes Cut — C
- Proposed Slope Stakes Fill — F
- Proposed Curb Ramp — CR
- Existing Metal Guardrail
- Proposed Guardrail
- Existing Cable Guiderail
- Proposed Cable Guiderail
- Equality Symbol
- Pavement Removal

## *VEGETATION:*

- Single Tree
- Single Shrub
- Hedge
- Woods Line
- Orchard
- Vineyard — Vineyard

## *EXISTING STRUCTURES:*

MAJOR:

- Bridge, Tunnel or Box Culvert — CONC
- Bridge Wing Wall, Head Wall and End Wall — CONC WW

MINOR:

- Head and End Wall — CONC HW
- Pipe Culvert
- Footbridge
- Drainage Box: Catch Basin, DI or JB — CB
- Paved Ditch Gutter
- Storm Sewer Manhole — S
- Storm Sewer — S

## *UTILITIES:*

POWER:

- Existing Power Pole
- Proposed Power Pole
- Existing Joint Use Pole
- Proposed Joint Use Pole
- Power Manhole — P
- Power Line Tower
- Power Transformer
- U/G Power Cable Hand Hole
- H-Frame Pole
- Recorded U/G Power Line — P
- Designated U/G Power Line (S.U.E.*) — P

TELEPHONE:

- Existing Telephone Pole
- Proposed Telephone Pole
- Telephone Manhole — T
- Telephone Booth
- Telephone Pedestal — T
- Telephone Cell Tower
- U/G Telephone Cable Hand Hole — HH
- Recorded U/G Telephone Cable — T
- Designated U/G Telephone Cable (S.U.E.*) — T
- Recorded U/G Telephone Conduit — TC
- Designated U/G Telephone Conduit (S.U.E.*) — TC
- Recorded U/G Fiber Optics Cable — T FO
- Designated U/G Fiber Optics Cable (S.U.E.*) — T FO

WATER:

- Water Manhole — W
- Water Meter
- Water Valve
- Water Hydrant
- Recorded U/G Water Line — W
- Designated U/G Water Line (S.U.E.*) — W
- Above Ground Water Line — A/G Water

TV:

- TV Satellite Dish
- TV Pedestal — C
- TV Tower
- U/G TV Cable Hand Hole — HH
- Recorded U/G TV Cable — TV
- Designated U/G TV Cable (S.U.E.*) — TV
- Recorded U/G Fiber Optic Cable — TV FO
- Designated U/G Fiber Optic Cable (S.U.E.*) — TV FO

GAS:

- Gas Valve
- Gas Meter
- Recorded U/G Gas Line — G
- Designated U/G Gas Line (S.U.E.*) — G
- Above Ground Gas Line — A/G Gas

SANITARY SEWER:

- Sanitary Sewer Manhole
- Sanitary Sewer Cleanout
- U/G Sanitary Sewer Line — SS
- Above Ground Sanitary Sewer — A/G Sanitary Sewer
- Recorded SS Forced Main Line — FSS
- Designated SS Forced Main Line (S.U.E.*) — FSS

MISCELLANEOUS:

- Utility Pole
- Utility Pole with Base
- Utility Located Object
- Utility Traffic Signal Box — S
- Utility Unknown U/G Line — ?UTL
- U/G Tank; Water, Gas, Oil
- Underground Storage Tank, Approx. Loc. — UST
- A/G Tank; Water, Gas, Oil
- Geoenvironmental Boring
- U/G Test Hole (S.U.E.*)
- Abandoned According to Utility Records — AATUR
- End of Information — E.O.I.

5/14/99

| PAVEMENT SCHEDULE | | | |
|---|---|---|---|
| C1 | PROP. APPROX. 3" ASPHALT CONCRETE SURFACE COURSE, TYPE SF9.5A, AT AN AVERAGE RATE OF 165 LBS. PER SQ. YD. IN EACH OF TWO LAYERS | T | EARTH MATERIAL. |
| C2 | PROP. VAR. DEPTH ASPHALT CONCRETE SURFACE COURSE, TYPE SF9.5A, AT AN AVERAGE RATE OF 110 LBS. PER SQ. YD. PER 1" DEPTH. TO BE PLACED IN LAYERS NOT TO EXCEED 1 1/2" IN DEPTH* | U | EXISTING PAVEMENT. |
| E1 | PROP. APPROX. 5" ASPHALT CONCRETE BASE COURSE, TYPE B25.0B, AT AN AVERAGE RATE OF 570 LBS. PER SQ. YD. | V | MILLING(VARIABLE DEPTH) |
| E2 | PROP. VAR. DEPTH ASPHALT CONCRETE BASE COURSE, TYPE B25.0B, AT AN AVERAGE RATE OF 114 LBS. PER SQ. YD. PER 1" DEPTH. TO BE PLACED IN LAYERS NOT LESS THAN 3" IN DEPTH OR GREATER THAN 5½" IN DEPTH. | W | VARIABLE DEPTH ASPHALT PAVEMENT |
| R1 | SHOULDER BERM GUTTER | | |

NOTE: PAVEMENT EDGE SLOPES ARE 1:1 UNLESS SHOWN OTHERWISE.

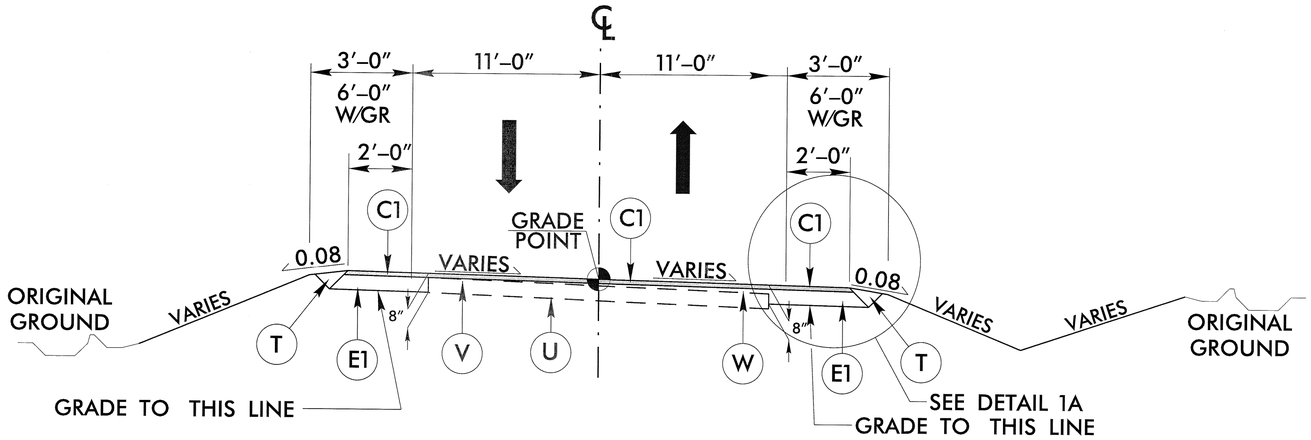


## TYPICAL SECTION NO. 1

### USE TYPICAL SECTION NO. 1

–L– STA. 12+00.00 TO STA. 13+88.87 (BEGIN BRIDGE)
–L– STA. 14+56.13 (END BRIDGE) TO STA. 17+20.00

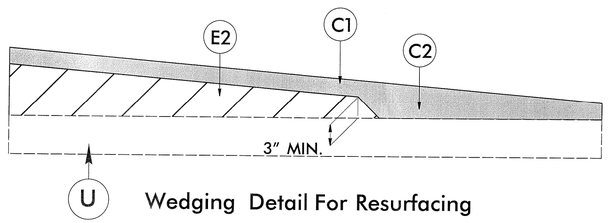


Wedging Detail For Resurfacing

## WEDGING DETAIL

**LOCHNER**

H. W. LOCHNER, INC.
2840 PLAZA PLACE, SUITE 202
RALEIGH, NC 27612

NC License Number F-0159

| PROJECT REFERENCE NO. | SHEET NO. |
|---|---|
| 17BP.3.R.32 | 2 |
| R/W SHEET NO. | |

SEAL ONLY FOR ROADWAY DESIGN ELEMENTS

ROADWAY DESIGN ENGINEER

NORTH CAROLINA PROFESSIONAL SEAL 25523 ENGINEER
9/19/14

## DETAIL OF SHOULDER BERM GUTTER

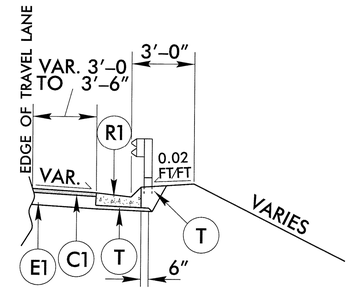


## DETAIL NO. 1A

USE PARTIAL TYPICAL 1A IN CONJUNCTION WITH TYPICAL 1 AT:
-L- STA. 13+13.60 RT. TO 13+76.87 RT.
-L- STA. 14+68.13 RT. TO 15+40.00 RT.

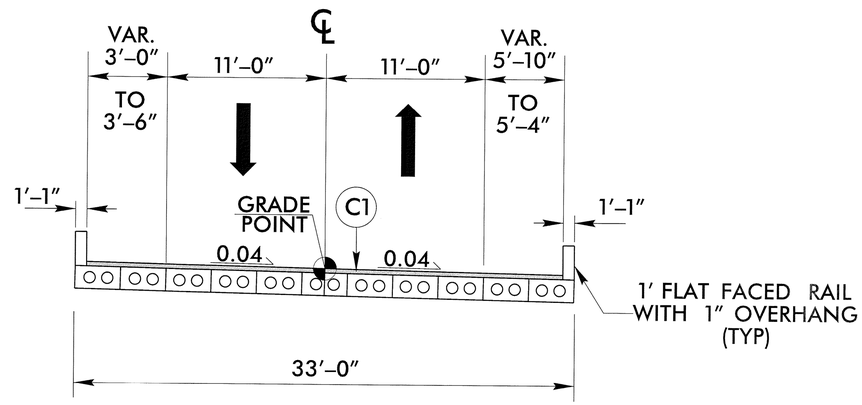


## TYPICAL SECTION NO. 2
### CORED SLAB BRIDGE OVERLAY

### USE TYPICAL SECTION NO. 2

–L– STA. 13+88.87 TO STA. 14+56.13

SYTIME
R:\Roadway\Proj\0902053_Rdy_typ.dgn
$$$$USERNAME$$$$

LOCHNER
H. W. LOCHNER, INC.
2840 PLAZA PLACE, SUITE 202
RALEIGH, NC 27612
NC License Number F-0159

| PROJECT REFERENCE NO. | SHEET NO. |
|---|---|
| 17BP.3.R.32 | 2-A |
| R/W SHEET NO. | |

SEAL ONLY FOR ROADWAY DESIGN ELEMENTS

ROADWAY DESIGN ENGINEER

NORTH CAROLINA PROFESSIONAL SEAL 25523 ENGINEER BRIAN K. EASON

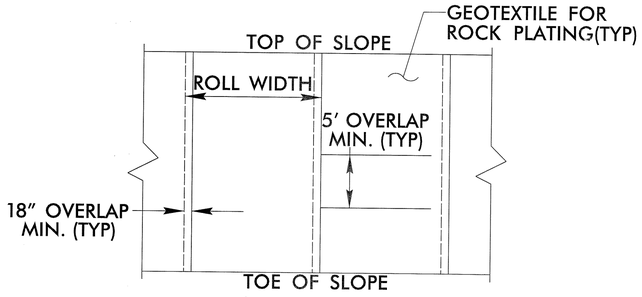


## GEOTEXTILE OVERLAP DETAIL (PLAN VIEW)

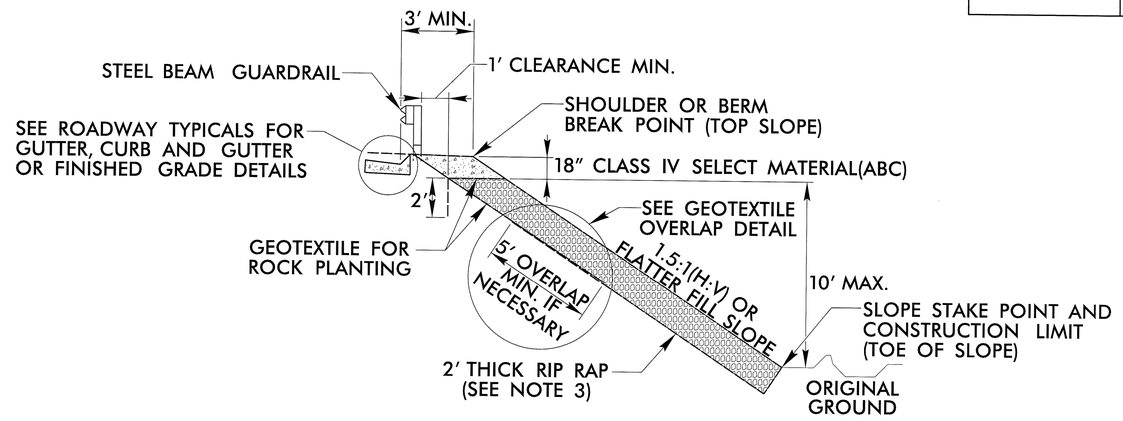


## ROCK PLATING DETAIL– TYPICAL SECTION

–L– STA. 12+75.00 TO BRIDGE EMBANKMENT LT.
–L– BRIDGE EMBANKMENT TO STA. 15+75.00 LT.
–L– BRIDGE EMBANKMENT TO STA. 15+75.00 RT.

NOTES:

1. SEE ROADWAY PLANS AND SUMMARY SHEETS FOR ROCK PLATING LOCATIONS.
2. FOR STANDARD ROCK PLATING. SEE SECTION 275 OF THE STANDARD SPECIFICATIONS.
3. USE CLASS 1, 2 OR B RIP RAP UNLESS REQUIRED OTHERWISE IN THE ROADWAY SUMMARY SHEETS.

13-AUG-2014 10:27
R:\Roadway\Proj\092053_Rdy_typ.dgn
$$$$USERNAME$$$$

6/21/00

COMPUTED BY: WCB DATE: 8-7-14
CHECKED BY: BKE DATE: 8-7-14

STATE OF NORTH CAROLINA
DIVISION OF HIGHWAYS

| PROJECT REFERENCE NO. | SHEET NO. |
|---|---|
| 17BP.3.R.32 | 3 |


LOCHNER
H. W. LOCHNER, INC.
2840 PLAZA PLACE, SUITE 202
RALEIGH, NC 27612
NC License Number F-0159

ECOLOGICAL ENGINEERING
NC FIRM LICENSE No. F-1148
1151 SE Cary Parkway
Suite 101
Cary, NC 27518
(919) 557-0929


## RIGHT OF WAY AREA DATA

| PARCEL NO. | PROPERTY OWNERS NAMES | TOTAL ACREAGE | AREA TAKEN | AREA REMAINING RT. | AREA REMAINING LT. | CONST. EASE. | PERM. DRAIN. EASE. | TEMP. DRAIN. EASE. |
|---|---|---|---|---|---|---|---|---|
| 1 | LM PROPERTIES OF WILMINGTON, LLC | | | | | 0.003 AC | | |
| 2 | PHILLIP M. MURPHY,III & WIFE, JENNIFER H. MURPHY | | | | | 0.036 AC | | |
| 3 | SARA S. McMILLIAN & MICHAEL R. McMILLIAN | | | | | 0.010 AC | | |
| 4 | WILLIAM O. HEWETT | | | | | | 0.007 AC | |
| | | | | | | | | |
| | | | | | | | | |
| | | | | | | | | |
| | | | | | | | | |
| | | | | | | | | |
| | | | | | | | | |

## SUMMARY OF EARTHWORK IN CUBIC YARDS

| STATION | STATION | UNCLASSIFIED EXCAVATION CY | EMBANK +% CY | BORROW CY | WASTE CY |
|---|---|---|---|---|---|
| –L– 12+00.00 BEG. PROJ. | –L– 13+88.87 BEG. BRIDGE | 25 | 114 | 89 | |
| –L– 14+56.13 END BRIDGE | 17+20.00 END PROJ. | 99 | 111 | 12 | |
| | | | | | |
| PROJECT TOTAL | | 124 | 225 | 101 | |
| | | | | | |
| | | | | | |
| | | | | | |
| EST. 5% TO REPLACE TOP | SOIL ON BORROW PIT | | | 5 | |
| GRAND TOTAL | | 124 | | 106 | |
| SAY | | 130 | | 110 | |

NOTE: Approximate quantities only. Unclassified Excavation, Borrow Excavation, Shoulder Borrow, Fine Grading, Clearing and Grubbing, Breaking of Existing Pavement, and Removal of Existing Pavement will be paid for at the contract lump sum price for "Grading".

## SHOULDER BERM GUTTER SUMMARY

| SURVEY LINE | STATION | STATION | LENGTH |
|---|---|---|---|
| –L– | 13+13.60 RT | 13+76.87 RT | 63.27 |
| –L– | 14+68.13 RT | 15+40.00 RT | 71.87 |
| | | | |
| | | | |
| | | | |
| | | | |
| | | | |
| | | | |
| | | TOTAL | 135.14 |
| | | SAY | 140 LF |

NOTE: Invert Elevations are for Bid Purposes only and shall not be used for project construction stakeout. See "Standard Specifications For Roads and Structures, Section 300–5".

## SUB–REGIONAL & REGIONAL LIST OF PIPES, ENDWALLS, ETC. (FOR PIPES 48" & UNDER)

| STATION | LOCATION (LT,RT, OR CL) | STRUCTURE NO. FROM | STRUCTURE NO. TO | TOP ELEVATION | INVERT ELEVATION | INVERT ELEVATION | SLOPE CRITICAL | DRAINAGE PIPE (RCP, CSP, CAAP, HDPE, or PVC) 12" | 15" | 18" | DO NOT USE RCP | DO NOT USE CSP | DO NOT USE CAAP | DO NOT USE HDPE | DO NOT USE PVC |
|---|---|---|---|---|---|---|---|---|---|---|---|---|---|---|---|
| SIZE | | | | | | | | | | | | | | | |
| THICKNESS OR GAUGE | | | | | | | | | | | | | | | |
| –L– 13+20 | RT | 0401 | | 6.13 | | | | | | | | | | | |
| | | 0401 | OUT1 | | 3.38 | 3.00 | | | 16 | | | | | | |
| –L– 15+32 | RT | 0402 | | 6.98 | | | | | | | | | | | |
| | | 0402 | OUT2 | | 4.23 | 2.10 | | | 16 | | X | | | | |
| | | | | | | | | | | | | | | | |
| TOTAL | | | | | | | | | 32 | | | | | | |

| C.S. PIPE (UNLESS NOTED OTHRWISE) 12" | 15" | 18" | 24" | 30" | 36" | 42" | 48" | CLASS III R.C. PIPE (UNLESS OTHERWISE NOTED) 12" | 15" | 18" | 24" | 30" | 36" | 42" | 48" |
|---|---|---|---|---|---|---|---|---|---|---|---|---|---|---|---|
| | .064 | .064 | .064 | .079 | .079 | .109 | .109 | | | | | | | | |
| | | | | | | | | | | | | | | | |
| | | | | | | | | | | | | | | | |
| | | | | | | | | | | | | | | | |
| | | | | | | | | | | | | | | | |
| | | | | | | | | | | | | | | | |

| 15" SIDE DRAIN PIPE | 18" SIDE DRAIN PIPE | 24" SIDE DRAIN PIPE | ENDWALLS STD. 838.01, STD. 838.11 OR STD. 838.80 (UNLESS NOTED OTHERWISE) CU. YDS. R.C.P. | C.S.P. |
|---|---|---|---|---|
| | | | | |
| | | | | |
| | | | | |
| | | | | |
| | | | | |

| QUANTITIES FOR DRAINAGE STRUCTURES * TOTAL L.F. FOR PAY QUANTITY SHALL BE COL. "A" + (1.3 X COL. "B") LIN. FT. PER EACH (0' THRU 5.0') | A 5.0' THRU 10.0' | B 10.0' AND ABOVE | C.B. STD. 840.01 OR STD. 840.02 | FRAME, GRATES AND HOOD STANDARD 840.03 TYPE OF GRATE E | F | G |
|---|---|---|---|---|---|---|
| 1 | | | | | | |
| 1 | | | | | | |
| | | | | | | |
| 2 | | | | | | |

| D.I. STD. 840.14 OR STD. 840.15 | D.I. FRAME & GRATE STD. 840.16 | D.I. TYPE "A" STD. 840.17 OR 840.26 | G.D.I. TYPE "B" STD. 840.18 OR 840.27 | G.D.I. TYPE "D" STD. 840.19 OR 840.28 | G.D.I. FRAME WITH GRATE STD. 840.22 | G.D.I. FRAME WITH TWO GRATES STD. 840.22 | G.D.I. FRAME WITH GRATE STD. 840.24 | G.D.I. (N.S.) FRAME WITH TWO GRATES STD. 840.24 | J.B. STD. 840.31 OR 840.32 | G.D.I. FRAME (N.S. FLAT) W2 GRATES STD. 840.29 | T.B.D.I. STD. 840.35 | 15" ELBOW | CORR. STEEL ELBOWS NO. & SIZE | CONC. COLLARS CL. "B" C.Y. STD 840.72 | CONC. & BRICK PIPE PLUG, C.Y. STD. 840.71 | PIPE REMOVAL LIN.FT. | REMARKS |
|---|---|---|---|---|---|---|---|---|---|---|---|---|---|---|---|---|---|
| | | | | | | | | | | 1 | 1 | | | | | | |
| | | | | | | | | | | 1 | 1 | | | | | | |
| | | | | | | | | | | | | 2 | | | | | |
| | | | | | | | | | | 2 | 2 | 2 | | | | | |

ABBREVIATIONS

| | |
|---|---|
| C.B. | CATCH BASIN |
| N.D.I. | NARROW DROP INLET |
| D.I. | DROP INLET |
| G.D.I. | GRATED DROP INLET |
| G.D.I. (N.S.) | GRATED DROP INLET (NARROW SLOT) |
| J.B. | JUNCTION BOX |
| M.H. | MANHOLE |
| T.B.D.I. | TRAFFIC BEARING DROP INLET |
| T.B.J.B. | TRAFFIC BEARING JUNCTION BOX |

"N" = DISTANCE FROM EDGE OF LANE TO FACE OF GUARDRAIL.
TOTAL SHOULDER WIDTH = DISTANCE FROM EDGE OF TRAVEL LANE TO SHOULDER BREAK POINT.
FLARE LENGTH = DISTANCE FROM LAST SECTION OF PARALLEL GUARDRAIL TO END OF GUARDRAIL.
W = TOTAL WIDTH OF FLARE FROM BEGINNING OF TAPER TO END OF GUARDRAIL.
G = GATING IMPACT ATTENUATOR TYPE 350
NG = NON-GATING IMPACT ATTENUATOR TYPE 350

## GUARDRAIL SUMMARY

| SURVEY LINE | BEG. STA. | END STA. | LOCATION | LENGTH STRAIGHT | LENGTH SHOP CURVED | LENGTH DOUBLE FACED | WARRANT POINT APPROACH END | WARRANT POINT TRAILING END | "N" DIST. FROM E.O.L. | TOTAL SHOUL. WIDTH | FLARE LENGTH APPROACH END | FLARE LENGTH TRAILING END | W APPROACH END | W TRAILING END | ANCHORS XI MOD | XI | GRAU 350 | M-350 | III | CAT-1 | VI MOD | BIC | AT-1 | IMPACT ATTENUATOR TYPE 350 EA | G | NG | SINGLE FACED GUARDRAIL | REMOVE EXISTING GUARDRAIL | REMOVE AND STOCKPILE EXISTING GUARDRAIL | REMARKS |
|---|---|---|---|---|---|---|---|---|---|---|---|---|---|---|---|---|---|---|---|---|---|---|---|---|---|---|---|---|---|---|
| L | 13+14.32 | 13+89.32 | LT | 75.00 | | | | BRIDGE | 3'–6" | 6'–6" | | 50 | | 1 | | | 1 | | 1 | | | | | | | | | | |
| L | 13+13.35 | 13+88.35 | RT | 75.00 | | | BRIDGE | | 5'–4" | 8'–4" | 50 | | 1 | | | | 1 | | 1 | | | | | | | | | | |
| L | 14+55.68 | 15+30.68 | LT | 75.00 | | | BRIDGE | | 3'–6" | 6'–6" | 50 | | 1 | | | | 1 | | 1 | | | | | | | | | | |
| L | 14+56.65 | 15+44.15 | RT | 87.50 | | | | BRIDGE | 5'–4" | 8'–4" | | 50 | | 1 | | | 1 | | 1 | | | | | | | | | | |
| | | | SUB-TOTAL | 312.50 | | | | | | | | | | | | | 4 | | 4 | | | | | | | | | | |
| | LESS ANCHORS: | | | | | | | | | | | | | | | | | | | | | | | | | | | | |
| | | GRAU 350 | 4@50.00 | –200.00 | | | | | | | | | | | | | | | | | | | | | | | | | |
| | | TYPE-III | 4@18.75 | –75.00 | | | | | | | | | | | | | | | | | | | | | | | | | |
| | | | TOTAL | 37.5 | | | | | | | | | | | | | 4 | | 4 | | | | | | | | | | |
| | | | SAY | 37.5 | | | | | | | | | | | | | | | | | | | | | | | | | |
| | | ADDITIONAL POSTS= 5 EACH | | | | | | | | | | | | | | | | | | | | | | | | | | | |


SYTIME
R:\Roadway\Proj\0900253_Rdy_SUM.dgn
$$$$USERNAME$$$$

**LOCHNER**
H. W. LOCHNER, INC.
2840 PLAZA PLACE, SUITE 202
RALEIGH, NC 27612
NC License Number F-0159

ECOLOGICAL ENGINEERING
NC FIRM LICENSE No: F-1148
1151 SE Cary Parkway
Suite 101
Cary, NC 27518
(919) 557-0929


| PROJECT REFERENCE NO. | SHEET NO. |
|---|---|
| 17BP.3.R.32 | 4 |
| R/W SHEET NO. | |

ROADWAY DESIGN ENGINEER
NORTH CAROLINA PROFESSIONAL SEAL 25523 ENGINEER BRIAN K. EASON
9/18/14

HYDRAULICS ENGINEER
NORTH CAROLINA PROFESSIONAL SEAL 20147 ENGINEER FRANK F. FLEMING
9/18/14

8/17/99

REVISIONS

NAD 83

(NOTE: PROPERTY AS SHOWN PER BRUNSWICK COUNTY GIS, MAPS, AND DEEDS)

1 — LM PROPERTIES OF WILMINGTON, LLC, DB 2868 PG 873, MC 20 PG 470

2 — PHILLIP M. MURPHY, III & WIFE, JENNIFER H. MURPHY, DB 2236 PG 952, PB 1 PG 180, PB 0 PG 109

3 — SARA S. McMILLIAN & MICHAEL R. McMILLIAN, DB 1203 PG 1171, PB R PG 17

4 — WILLIAM O. HEWETT, DB 1411 PG 932

LM PROPERTIES OF WILMINGTON, LLC, DB 2466 PG 279, PB R PG 143

RICHARD BRAY, DB 1926 PG 196, PB 0 PG 129

TBM#1 -BL- STA 16+29.67, 41.47' LT EL=6.22', "BENCHTIE NAIL IN 18" PINE TREE"

TBM#2 -BL- STA 17+52.19, 223.14' LT EL=8.15', "BENCHTIE NAIL IN 18" PINE TREE"

BEGIN CONSTRUCTION -L- POC STA. 12+00.00

END CONSTRUCTION -L- POC STA. 17+20.00

BEGIN APPR. SLAB STA. 13+76.87

PCC Sta. 13+19.87

PC Sta. 11+84.94

PT Sta. 11+68.42

PC Sta. 10+70.98

POT Sta. 10+00.00

BEGIN BRIDGE -L- STA. 13+88.87

END APPR. SLAB STA. 14+68.13

PT Sta. 15+16.00

PC Sta. 16+26.91

PT Sta. 17+78.59

POT Sta. 18+53.28

END BRIDGE -L- STA. 14+56.13

BEGIN SBG 13+13.6 -L-

END SBG 15+40 -L-

CLASS B RIP RAP EST 1 TON EST 5 SY GEOTEXTILE

TIE TO EXISTING C&G

50' TAPER BOTH SIDES

60' TAPER LEFT SIDE

2' PS

20' INCR

TB 2GI

TYPE-III GRAU 350

+00.00 40.00' LT.

+00.00 65.00' LT.

+80.00 EXIST R/W & 65.00' LT.

+00.00 EXIST R/W & 35.00' LT.

+16.20 35.00' LT. EXIST R/W

+12.12 60.62' LT

+09.77 EXIST R/W

+50.00 EXIST. R/W

+30.00 EXIST. R/W & 45.00' RT

+10.00 EXIST R/W & 45.00' RT

15" W ELBOWS

SHARON CREEK

HIGH WATER MARK USED ELEV=5.05' (NOTE)

SEAT EL=4.22'

(GRISSETT SWAMP)

TO SHELL POINT RD SW

TO NC 130 HOLDEN BEACH RD SW

SR 1134 GRAY BRIDGE RD SW

N 5° 50' 09.2" E

N 0° 29' 10.1" E

N 26° 45' 08.9" E

N 20° 40' 29.3" E

S 73° 13' 06" E 7.36'

S 08° 30' 38" W 60.03'

S 68° 54' 46" E 135.53'

N 84° 41' 11" W 200.48'

N 72° 38' 47" E 180.40'

N 00° 04' 12" E 117.39'

N 16° 24' 37" E 75.45'

N 29° 33' 16" E 55.31'

N 32° 45' 37" W 55.46'

N 25° 12' 28" W 56.19'

N 00° 18' 25" E 51.59'

N 50° 04' 48" E 103.83'

N 73° 42' 49" E 21.36'

N 62° 40' 59" W 82.03'

N 08° 57' 55" W 81.66'

N 58° 18' 36" E 26.30'

N 17° 09' 31" W 52.80'

S 69° 56' 16" W 52.71'

S 56° 47' 26" W 62.49'

S 70° 00' 45" W 52.93'

S 80° 22' 29" W 102.54'

N 86° 27' 01" E 80.44'

N 42° 45' 50" E 42.97'

USE ROCK PLATING (SEE SHEET 2-A): -L- 12+75 TO BRIDGE EMBANKMENT LT.
-L- BRIDGE EMBANKMENT TO 15+75 LT.
-L- BRIDGE EMBANKMENT TO 15+75 RT.

NOTE: HIGH WATER MARK ELEV=2.46' TAKEN @ 11:43 AM ON WEDNESDAY NOVEMBER 6TH 2013

| POINT | NORTHING | EASTING | ELEV. |
|---|---|---|---|
| GPS-1 | 81,934.611 | 2,194,525.955 | 17.826' |
| GPS-2 | 82,809.071 | 2,194,533.882 | 6.627' |
| BL-1 | 83,131.408 | 2,194,618.223 | 6.250' |
| BL-2 | 83,470.248 | 2,194,764.926 | 11.620' |
| TBM#1 | 83,066.430 | 2,194,558.351 | 6.225' |
| TBM#2 | 83,260.909 | 2,194,431.138 | 8.148' |

## DATUM DESCRIPTION

THE LOCALIZED COORDINATE SYSTEM DEVELOPED FOR THIS PROJECT IS BASED ON THE STATE PLANE COORDINATES ESTABLISHED BY OTHERS FOR MONUMENT "090053-2" WITH NAD 83/NA 2011 STATE PLANE GRID COORDINATES OF NORTHING: 82809.071(ft) EASTING: 2194533.882(ft) ELEVATION: 6.627(ft)
THE AVERAGE COMBINED GRID FACTOR USED ON THIS PROJECT (GROUND TO GRID) IS: 1.000123478
THE N.C. LAMBERT GRID BEARING AND LOCALIZED HORIZONTAL GROUND DISTANCE FROM "090053-2" TO -L- STATION 10+00.00 IS 141.594' S 04° 39' 46.27" E
ALL LINEAR DIMENSIONS ARE LOCALIZED HORIZONTAL DISTANCES
VERTICAL DATUM USED IS NAVD 88

SEE S-1 THUR S-15 FOR STRUCTURE PLANS

| PI Sta 11+19.74 | PI Sta 12+52.59 | PI Sta 14+18.21 | PI Sta 17+02.82 |
|---|---|---|---|
| Δ = 5° 20' 59.1" (RT) | Δ = 10° 24' 52.1" (RT) | Δ = 10° 30' 07.6" (RT) | Δ = 6° 04' 39.6" (LT) |
| D = 5° 29' 24.4" | D = 7° 43' 06.6" | D = 5° 21' 17.1" | D = 4° 00' 25.6" |
| L = 97.44' | L = 134.93' | L = 196.13' | L = 151.67' |
| T = 48.76' | T = 67.65' | T = 98.34' | T = 75.91' |
| R = 1,043.62' | R = 742.32' | R = 1,070.00' | R = 1,429.86' |
| | SE = As Shown | SE = 0.04 | SE = As Shown |
| | | RO = 89° | |
| | | V = 45 Mph | |

## BRIDGE HYDRAULIC DATA

| | | |
|---|---|---|
| DESIGN DISCHARGE | = 850 | CFS |
| DESIGN FREQUENCY | = 25 | YRS |
| DESIGN HW ELEVATION | = 4.6 | FT |
| BASE DISCHARGE | = 1300 | CFS |
| BASE FREQUENCY | = 100 | YRS |
| BASE HW ELEVATION | = 5.52 | FT |
| OVERTOPPING DISCHARGE | = 1859 | CFS |
| OVERTOPPING FREQUENCY | = 500- | YRS |
| OVERTOPPING ELEVATION | = 6.9 | FT |
| DATE OF SURVEY | = 12/12/13 | |
| W.S. ELEVATION AT DATE OF SURVEY | = -1.9 | FT |

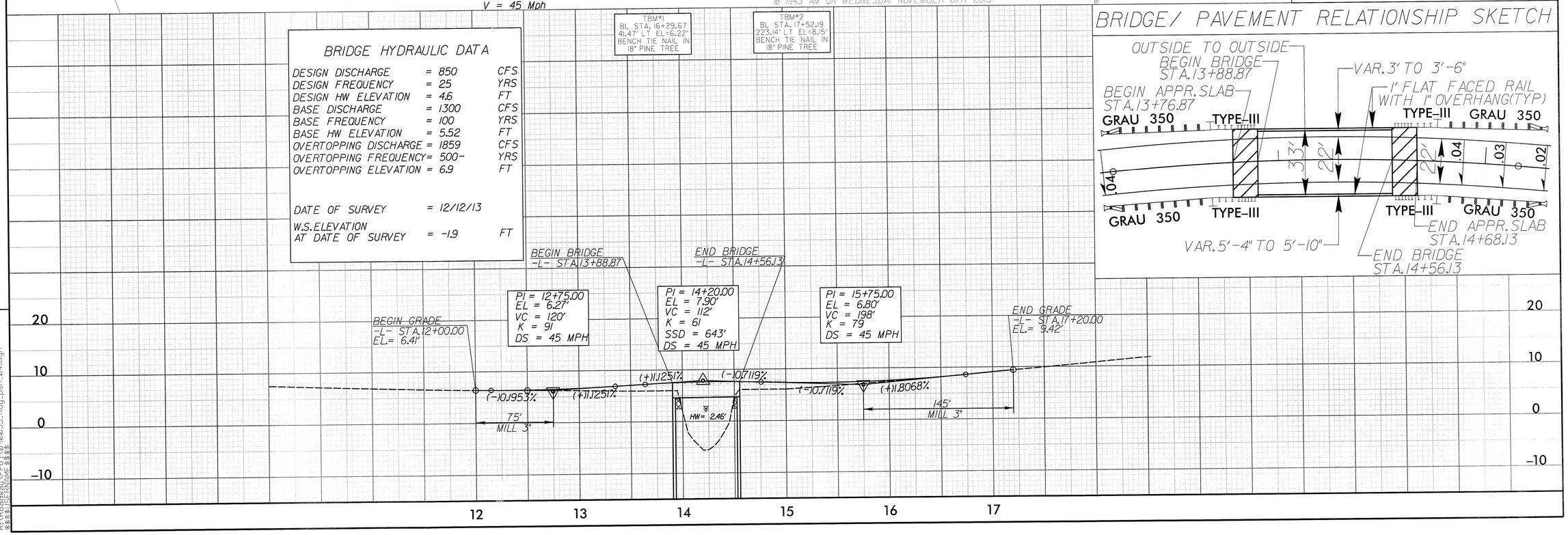


BRIDGE / PAVEMENT RELATIONSHIP SKETCH





$XTIME
$XREFnbrs\Proj\090053_Rdy_psh_04.dgn
$$$$USERNAME

STATE OF NORTH CAROLINA
DIVISION OF HIGHWAYS

# TRANSPORTATION MANAGEMENT PLAN

# BRUNSWICK COUNTY

## INDEX OF SHEETS



| SHEET NO. | TITLE |
|---|---|
| TMP-1 | TITLE SHEET, VICINITY MAP AND INDEX OF SHEETS AND LIST OF APPLICABLE ROADWAY STANDARD DRAWINGS |
| TMP-1A | PHASING, GENERAL NOTES AND LOCAL NOTES |
| TMP-2 | DETOUR SIGNING |



## ROADWAY STANDARD DRAWINGS

| STD. NO. | TITLE |
|---|---|
| 1101.03 | TEMPORARY ROAD CLOSURES |
| 1101.11 | TRAFFIC CONTROL DESIGN TABLES |
| 1110.01 | STATIONARY WORK ZONE SIGNS |
| 1145.01 | BARRICADES |
| 1205.01 | PAVEMENT MARKINGS - LINE TYPES & OFFSETS |
| 1205.02 | PAVEMENT MARKINGS - 2 LANE & MULTILANE ROADWAYS |
| 1205.12 | PAVEMENT MARKINGS - BRIDGES |
| 1250.01 | PAVEMENT MARKER SPACING |
| 1251.01 | RAISED PAVEMENT MARKERS - (TEMPORARY & PERMANENT) |
| 1261.01 | GUARDRAIL AND BARRIER DELINEATION SPACING |
| 1261.02 | GUARDRAIL AND BARRIER DELINEATION TYPE |
| 1262.01 | GUARDRAIL AND DELINEATION |

**LOCHNER**
H. W. LOCHNER, INC.
2840 PLAZA PLACE, SUITE 202
RALEIGH, NC 27612
LICENSE # F-0159

*K Smith, PE* — *QC ENGINEER*

*B Eason, PE* — *PROJECT ENGINEER*

*B Bollman* — *DESIGN ENGINEER / TECHNICIAN*

*WORK ZONE SAFETY & MOBILITY*
*"from the MOUNTAINS to the COAST"*

*N.C.D.O.T. WORK ZONE TRAFFIC CONTROL*
*1561 MAIL SERVICE CENTER (MSC) RALEIGH, NC 27699-1561*
*750 N. GREENFIELD PARKWAY, GARNER, NC 27529 (DELIVERY)*
*PHONE: (919) 773-2800 FAX: (919) 771-2745*

Katherine Hite, PE — *DIVISION TRAFFIC ENGINEER*

DIVISION OF HIGHWAYS · STATE OF NORTH CAROLINA · DEPARTMENT OF TRANSPORTATION · WORK ZONE TRAFFIC CONTROL

*APPROVED:* Brian K. Eason
*DATE:* 9/18/14

*SEAL*

NORTH CAROLINA PROFESSIONAL SEAL 25523 ENGINEER BRIAN K. EASON

SHEET NO.
TMP-1

TIP PROJECT: 17BP.3.R.32

SYTIME
R:\Traffic\TrafficControl\TCP\090053_TCP_TSH.dgn
$$$$USERNAME$$$$

| PROJ. REFERENCE NO. | SHEET NO. |
|---|---|
| 17BP.3.R.32 | TMP-1A |

LOCHNER
H. W. LOCHNER, INC.
2840 PLAZA PLACE SUITE 202
RALEIGH, NC 27612
NC License Number F-0159

# *MANAGEMENT STRATEGIES*

- CLOSE SR 1134 (GRAY BRIDGE ROAD) TO THROUGH TRAFFIC BETWEEN NC 130 AND SR 1132.

- DIRECT THROUGH TRAFFIC TO OFFSITE DETOUR.

- MAINTAIN LOCAL TRAFFIC

# *PHASING*

PHASE I

PHASE I

PRIOR TO ANY CONSTRUCTION OPERATIONS, INSTALL AND COVER DETOUR SIGNS AS SHOWN ON TMP-2 AND IN ACCORDANCE WITH ROADWAY STANDARD DRAWING 1101.03 SHEET 1 OF 9.

PHASE II

INSTALL BARRICADES AND UNCOVER DETOUR SIGNS. CLOSE -L- (SR 1134 /GRAY BRIDGE RD.) TO TRAFFIC AS SHOWN ON TMP-2. CONSTRUCT BRIDGE, APPROACHES, AND ROADWAY UP TO AND INCLUDING THE FINAL LAYER OF SURFACE COURSE.

PHASE III

UPON COMPLETION OF BRIDGE, APPROACHES AND ROADWAY, PLACE FINAL PAVEMENT MARKINGS AND MARKERS IN ACCORDANCE WITH ROADWAY STANDARD DRAWINGS. REMOVE ALL ROAD CLOSURE SIGNS AND BARRICADES AND OPEN -L- (SR 1134 /GRAY BRIDGE RD.) TO THROUGH TRAFFIC.

# *GENERAL NOTES*

CHANGES MAY BE REQUIRED WHEN PHYSICAL DIMENSIONS IN THE DETAIL DRAWINGS, STANDARD DETAILS, AND ROADWAY DETAILS ARE NOT ATTAINABLE TO MEET FIELD CONDITIONS OR RESULT IN DUPLICATE OR UNDESRIED OVERLAPING OF DEVICES. MODIFICATION MAY INCLUDE: MOVING, SUPPLEMENTING, COVERING, OR REMOVAL OF DEVICES AS DIRECTED BY THE ENGINEER.

THE FOLLOWING GENERAL NOTES APPLY AT ALL TIMES FOR THE DURATION OF THE CONSTRUCTION PROJECT EXCEPT WHEN OTHERWISE NOTED IN THE PLAN OR DIRECTED BY THE ENGINEER.

TRAFFIC PATTERN ALTERATIONS

A) NOTIFY THE ENGINEER TWENTY ONE (21) CALENDAR DAYS PRIOR TO ANY TRAFFIC PATTERN ALTERATION.

SIGNING

B) INSTALL ADVANCE WORK ZONE WARNING SIGNS WHEN WORK IS WITHIN 40 FT FROM THE EDGE OF TRAVEL LANE AND NO MORE THAN THREE (3) DAYS PRIOR TO THE BEGINNING OF CONSTRUCTION.

C) PROVIDE SIGNING AND DEVICES REQUIRED TO CLOSE THE ROAD ACCORDING TO THE ROADWAY STANDARD DRAWINGS AND TRAFFIC CONTROL PLANS.

PROVIDE SIGNING REQUIRED FOR THE OFF-SITE DETOUR ROUTE AS SHOWN ON SHEET TMP-2.

D) COVER OR REMOVE ALL SIGNS AND DEVICES REQUIRED TO CLOSE THE ROAD WHEN ROAD CLOSURE IS NOT IN OPERATION.

COVER OR REMOVE ALL SIGNS REQUIRED FOR THE OFF-SITE DETOUR WHEN THE DETOUR IN NOT IN OPERATION.

E) ENSURE ALL NECESSARY SIGNING IS IN PLACE PRIOR TO ALTERING ANY TRAFFIC PATTERN.

TRAFFIC CONTROL DEVICES

F) PLACE TYPE III BARRICADES, WITH "ROAD CLOSED" SIGN R11-2 ATTACHED, OF SUFFICIENT LENGTH TO CLOSE ENTIRE ROADWAY.

PAVEMENT MARKINGS AND MARKERS

G) INSTALL PAVEMENT MARKINGS ON THE FINAL SURFACE AS FOLLOWS:

| ROAD NAME | MARKING | MARKER |
|---|---|---|
| GRAY BRIDGE ROAD SW | PAINT | RAISED |

H) TIE PROPOSED PAVEMENT MARKING LINES TO EXISTING PAVEMENT MARKING LINES.

I) REMOVE/REPLACE ANY CONFLICTING/DAMAGED PAVEMENT MARKINGS AND MARKERS.

J) PASSING ZONE WILL BE DETERMINED IN THE FIELD AND MUST BE APPROVED BY THE ENGINEER.

APPROVED Brian K Eason DATE: 9/19/14

SEAL

NORTH CAROLINA PROFESSIONAL SEAL 25523 ENGINEER BRIAN K. EASON

DIVISION OF HIGHWAYS STATE OF NORTH CAROLINA DEPARTMENT OF TRANSPORTATION WORK ZONE TRAFFIC CONTROL

# TRANSPORTATION OPERATION PLAN

SYTIME
X:\Traffic\TrafficControl\TCP\090053_TCP_1A.dgn
$$$$USERNAME$$$$

| PROJ. REFERENCE NO. | SHEET NO. |
|---|---|
| 17BP.3.R.32 | TMP-2 |


**LOCHNER**
H. W. LOCHNER, INC.
2840 PLAZA PLACE, SUITE 202
RALEIGH, NC 27612
NC License Number F-0159


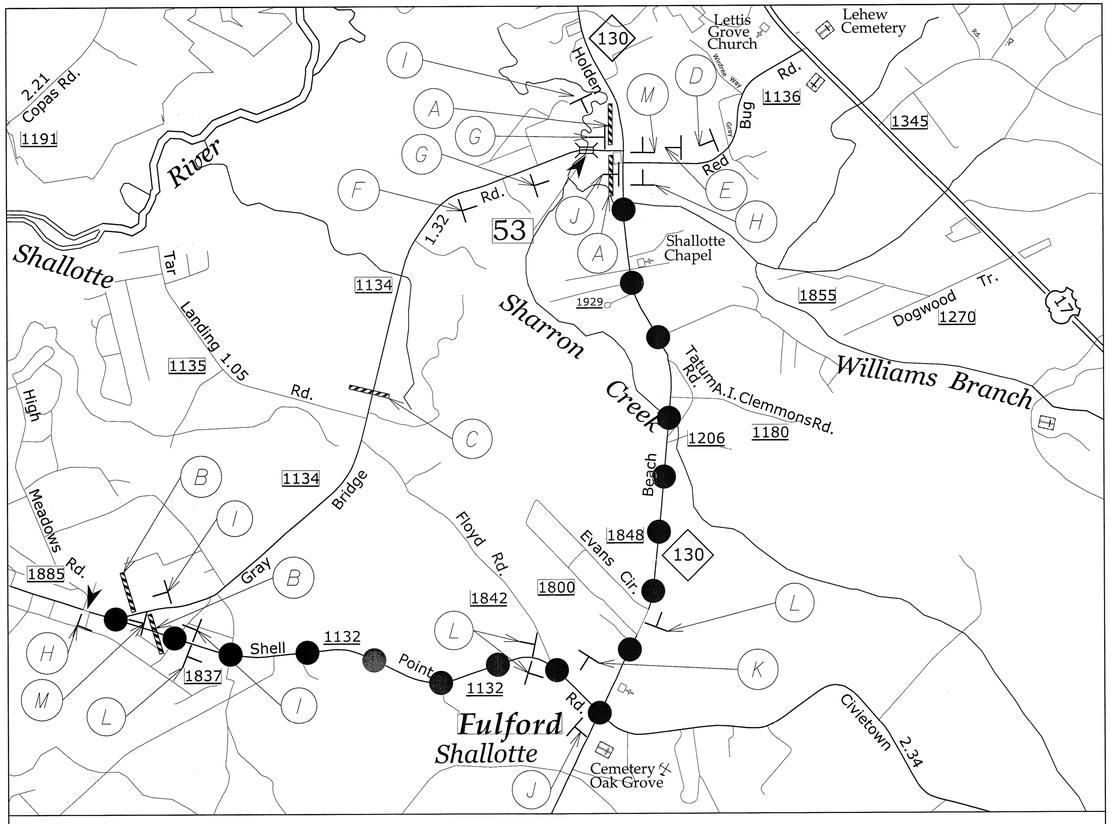


VICINITY MAP — OFF SITE DETOUR

A
R11-3
60" x 30"
ROAD CLOSED
0.1 MILES AHEAD
LOCAL TRAFFIC ONLY
DETOUR
M4-10L
48" x 18"
TYPE III BARRICADE

B
R11-3
60" x 30"
ROAD CLOSED
2 MILES AHEAD
LOCAL TRAFFIC ONLY
DETOUR
M4-10R
48" x 18"
TYPE III BARRICADE

C
R11-4
60" x 30"
ROAD CLOSED
TO
THRU TRAFFIC
TYPE III BARRICADE

D
ROAD CLOSED AHEAD
W20-3
48" x 48"

E
DETOUR AHEAD
W20-2
48" x 48"

F
ROAD CLOSED 1000 FT
W20-3
48" x 48"

G
ROAD CLOSED 500 FT
W20-3
48" x 48"

H
ROAD CLOSED AHEAD
W20-3
48" x 48"
NEXT LEFT
SP-4L
42" X 12"

I
ROAD CLOSED AHEAD
W20-3
48" x 48"
NEXT RIGHT
SP-4R
42" X 12"

J
GRAY BRIDGE RD
SP-1
66" x 18"
DETOUR
M4-8
24" x 12"
M6-1
21" x 15"

K
GRAY BRIDGE RD
SP-1
66" x 18"
DETOUR
M4-8
24" x 12"
M6-1
21" x 15"

L
GRAY BRIDGE RD
SP-1
66" x 18"
DETOUR
M4-8
24" x 12"
M6-3
21" x 15"

M
END DETOUR
M4-8 A
24" X 18"

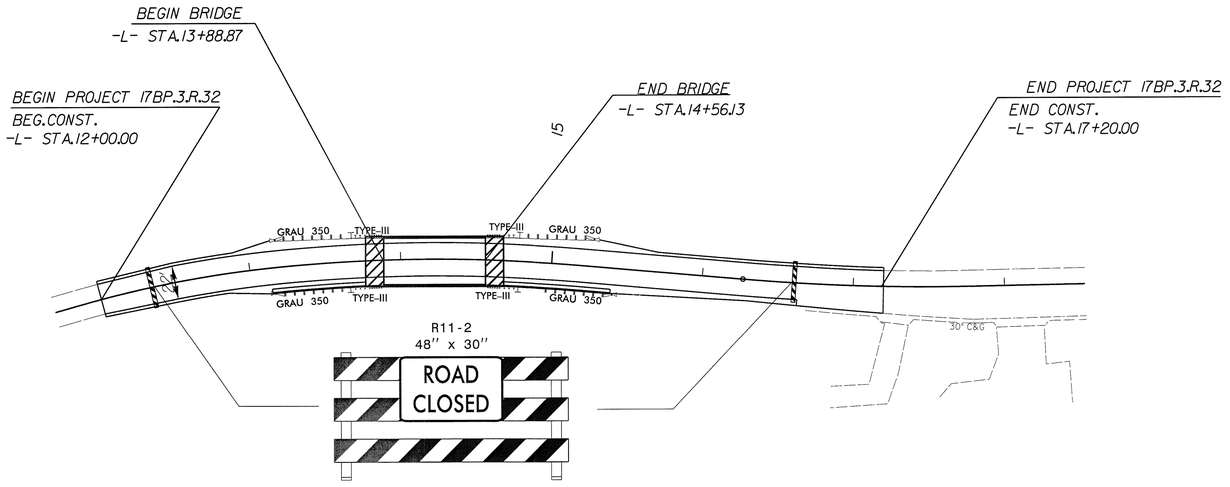


TYPE III BARRICADE(S)

APPROVED Brian K Eason DATE: 8/19/14

SEAL — NORTH CAROLINA PROFESSIONAL ENGINEER SEAL 25523 BRIAN K. EASON

DIVISION OF HIGHWAYS — STATE OF NORTH CAROLINA — DEPARTMENT OF TRANSPORTATION — WORK ZONE TRAFFIC CONTROL

# DETOUR SIGNING

SYTIME
I:\RAL\PRJ\0000938\TIP\Traffic\TrafficControl\TCP\090053_TCP_2.dgn
$$$$USERNAME$$$$

| PROJ. REFERENCE NO. | SHEET NO. |
|---|---|
| 17BP.3.R.32 | TMP-3 |

SIGN NUMBER: SP-1
TYPE: STATIONARY
QUANTITY: SEE PLANS

SIGN WIDTH: 5'-6"
HEIGHT: 1'-6"
TOTAL AREA: 8.25 Sq.Ft.

BORDER TYPE: FLUSH
RECESS: 0.47"
WIDTH: 0.63"
RADII: 1.5"

NO. Z BARS:
LENGTH:

BACKG COLOR: Fluorescent Orange
COPY COLOR: Black

| SYMBOL | X | Y | WID | HT |
|---|---|---|---|---|
| | | | | |
| | | | | |
| | | | | |
| | | | | |
| | | | | |
| | | | | |
| | | | | |

MAT'L: 0.080" (2.0 mm) ALUMINUM

DESIGN BY: B. DEHLER
PROJECT ID: 17BP.3.R.32

CHECKED BY: B. EASON
DIV: 3

DATE: July 08, 2014

USE NOTES: 1,2

1. Legend and border shall be direct applied black non-reflective sheeting.
2. Background shall be NC GRADE B fluoresent orange retroreflective sheeting.

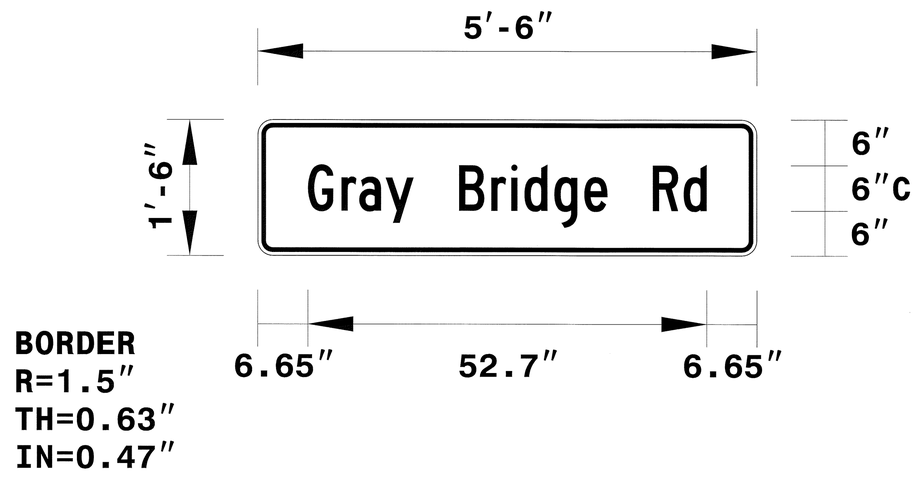


Spacing Factor is 1 unless specified otherwise

LETTER POSITIONS

Letter locations are panel edge to lower left corner

| G | r | a | y | | B | r | i | d | g | e | | R | d | Series/Size Text Length |
|---|---|---|---|---|---|---|---|---|---|---|---|---|---|---|
| 6.6 | 11.1 | 13.4 | 16.9 | 20.6 | 26.6 | 30.9 | 33.5 | 35.3 | 39.2 | 43.2 | 46.2 | 52.2 | 56.3 | C 2000 52.7 |

FILENAME: GRAY BRIDGE RD

NORTH CAROLINA D.O.T. SIGN DETAIL

APPROVED: Brian K Eason DATE: 9/10/14

SEAL

NORTH CAROLINA PROFESSIONAL SEAL 25523 ENGINEER BRIAN K. EASON

DIVISION OF HIGHWAYS STATE OF NORTH CAROLINA DEPARTMENT OF TRANSPORTATION WORK ZONE TRAFFIC CONTROL

SPECIAL SIGN DESIGN

09-JUL-2014 10:56
I:\RAL\PRJ\0000938\TIP\Traffic\Signing\CADD\Sign Designs\R.8_TC_PSH_SP-1.dgn
$$$$USERNAME$$$$

TIP PROJECT: 17BP.3.R.32

THIS PROJECT HAS BEEN DESIGNED TO SENSITIVE WATERSHED STANDARDS.

HIGH QUALITY WATER(S) EXIST ON THIS PROJECT

*High Quality Water Zone(s) Exist*
*From Sta. -L- 12+50*
*to Sta. -L- 17+20*
*Refer To E. C. Special Provisions for Special Considerations.*

ENVIRONMENTALLY SENSITIVE AREA(S) EXIST ON THIS PROJECT

*Refer To E. C. Special Provisions for Special Considerations.*

# STATE OF NORTH CAROLINA
# DIVISION OF HIGHWAYS

## PLAN FOR PROPOSED
## HIGHWAY EROSION CONTROL

# *BRUNSWICK COUNTY*

***LOCATION: BRIDGE NO. 09-0053 OVER SHARRON CREEK ON SR 1134 (GRAY BRIDGE RD. SW)***

*RELEASE FOR CONSTRUCTION*
*DATE: 8/14/2014*

| STATE | STATE PROJECT REFERENCE NO. | SHEET NO. | TOTAL SHEETS |
|---|---|---|---|
| N.C. | 17BP.3.R.32 | EC-1 | |

| STATE PROJ. NO. | F. A. PROJ. NO. | DESCRIPTION |
|---|---|---|
| 17BP.3.R.32 | | PE, RW, CONST |

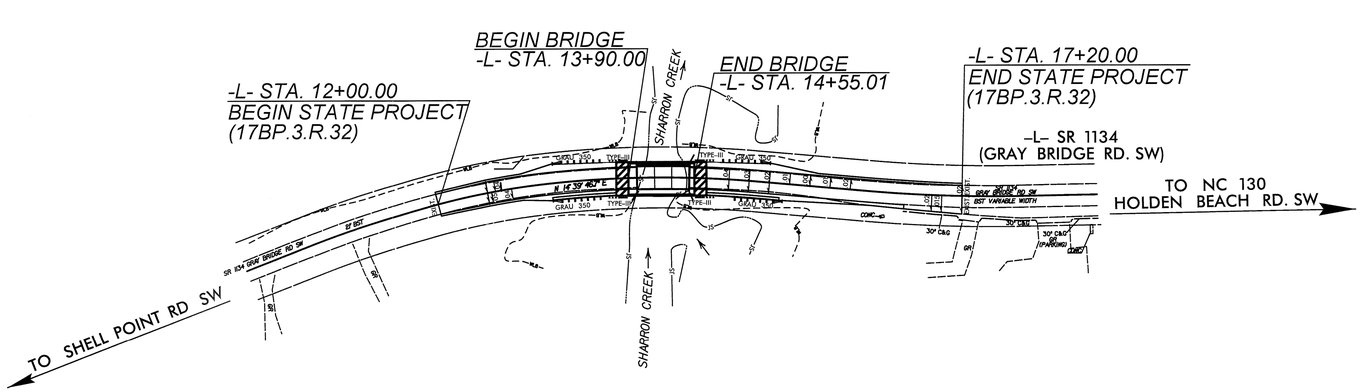


# 4

## EROSION AND SEDIMENT CONTROL MEASURES

| Std. # | Description | Symbol |
|---|---|---|
| 1630.03 | Temporary Silt Ditch | TSD |
| 1630.05 | Temporary Diversion | TD |
| 1605.01 | Temporary Silt Fence | |
| 1606.01 | Special Sediment Control Fence | |
| 1622.01 | Temporary Berms and Slope Drains | |
| 1630.02 | Silt Basin Type B | |
| 1633.01 | Temporary Rock Silt Check Type-A | |
| | Temporary Rock Silt Check Type-A with Matting and Polyacrylamide (PAM) | |
| 1633.02 | Temporary Rock Silt Check Type-B | |
| | Wattle / Coir Fiber Wattle | RW CFW |
| | Wattle / Coir Fiber Wattle with Polyacrylamide (PAM) | |
| 1634.01 | Temporary Rock Sediment Dam Type-A | |
| 1634.02 | Temporary Rock Sediment Dam Type-B | |
| 1635.01 | Rock Pipe Inlet Sediment Trap Type-A | |
| 1635.02 | Rock Pipe Inlet Sediment Trap Type-B | |
| 1630.04 | Stilling Basin | |
| 1630.06 | Special Stilling Basin | |
| | Rock Inlet Sediment Trap: | |
| 1632.01 | Type A | A |
| 1632.02 | Type B | B |
| 1632.03 | Type C | C |
| | Skimmer Basin | |
| | Tiered Skimmer Basin | |
| | Infiltration Basin | |

REID ROBOL, EI
LEVEL III NAME

3409
LEVEL III CERTIFICATION NO.

***GRAPHIC SCALE***

25 0 50

PLANS

0

PROFILE (HORIZONTAL)

0

PROFILE (VERTICAL)

*ROADSIDE ENVIRONMENTAL UNIT*
*DIVISION OF HIGHWAYS*
*STATE OF NORTH CAROLINA*

*THESE EROSION AND SEDIMENT CONTROL PLANS COMPLY WITH THE REGULATIONS SET FORTH BY THE NCG-010000 GENERAL CONSTRUCTION PERMIT EFFECTIVE AUGUST 3, 2011 ISSUED BY THE NORTH CAROLINA DEPARTMENT OF ENVIRONMENT AND NATURAL RESOURCES DIVISION OF WATER QUALITY.*

*Prepared In the Office of:*

***ROADSIDE ENVIRONMENTAL UNIT***

*1 South Wilmington St.*
*Raleigh, NC 27611*

***2012 STANDARD SPECIFICATIONS***

Roadway Standard Drawings

The following roadway english standards as appear in "Roadway Standard Drawings"- Roadway Design Unit - N. C. Department of Transportation - Raleigh, N. C., dated January 2012 and the latest revison thereto are applicable to this project and by reference hereby are considered a part of these plans.

| | | | |
|---|---|---|---|
| 1604.01 | Railroad Erosion Control Detail | 1632.01 | Rock Inlet Sediment Trap Type A |
| 1605.01 | Temporary Silt Fence | 1632.02 | Rock Inlet Sediment Trap Type B |
| 1606.01 | Special Sediment Control Fence | 1632.03 | Rock Inlet Sediment Trap Type C |
| 1607.01 | Gravel Construction Entrance | 1633.01 | Temporary Rock Silt Check Type A |
| 1622.01 | Temporary Berms and Slope Drains | 1633.02 | Temporary Rock Silt Check Type B |
| 1630.01 | Riser Basin | 1634.01 | Temporary Rock Sediment Dam Type A |
| 1630.02 | Silt Basin Type B | 1634.02 | Temporary Rock Sediment Dam Type B |
| 1630.03 | Temporary Silt Ditch | 1635.01 | Rock Pipe Inlet Sediment Trap Type A |
| 1630.04 | Stilling Basin | 1635.02 | Rock Pipe Inlet Sediment Trap Type B |
| 1630.05 | Temporary Diversion | 1640.01 | Coir Fiber Baffle |
| 1630.06 | Special Stilling Basin | 1645.01 | Temporary Stream Crossing |
| 1631.01 | Matting Installation | | |

4:59:31 PM
R:\Environmental\Design\53_Rou_esh.dgn
dwoodruff

| PROJECT REFERENCE NO. | SHEET NO. |
|---|---|
| 17BP.3.R.32 | EC-2 |
| R/W SHEET NO. | |
| ROADWAY DESIGN ENGINEER | HYDRAULICS ENGINEER |

# COIR FIBER WATTLE DETAIL

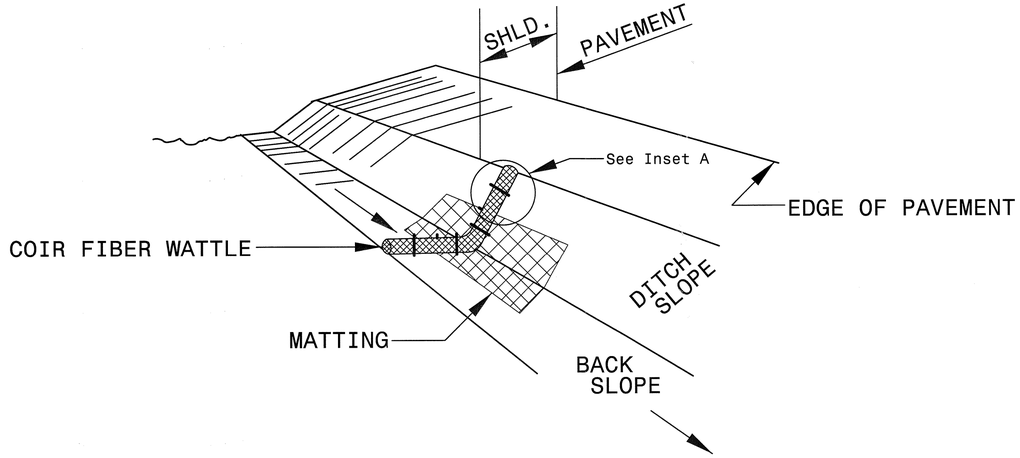


**ISOMETRIC VIEW**

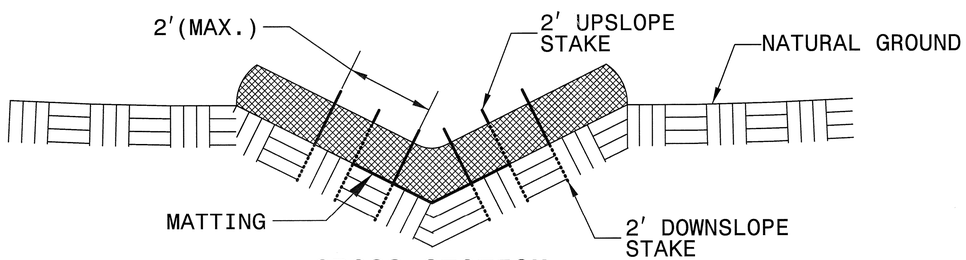


**CROSS SECTION VEE DITCH**

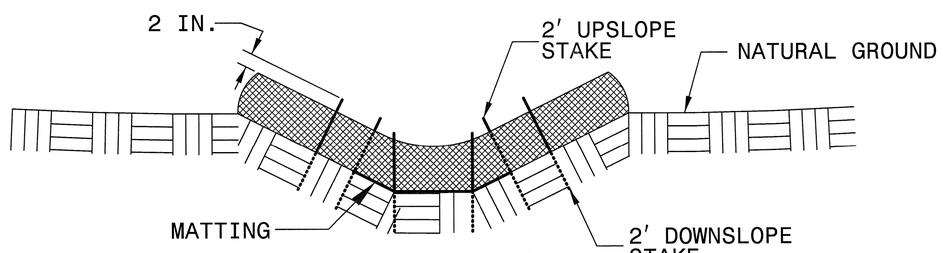


**CROSS SECTION TRAPEZOIDAL DITCH**

NOTES:

USE MINIMUM 12 IN. DIAMETER COIR FIBER (COCONUT FIBER) WATTLE.

USE 2 FT. WOODEN STAKES WITH A 2 IN. BY 2 IN. NOMINAL CROSS SECTION.

ONLY INSTALL WATTLE(S) TO A HEIGHT IN DITCH SO FLOW WILL NOT WASH AROUND WATTLE AND SCOUR DITCH SLOPES AND AS DIRECTED.

INSTALL A MINIMUM OF 2 UPSLOPE STAKES AND 4 DOWNSLOPE STAKES AT AN ANGLE TO WEDGE WATTLE TO BOTTOM OF DITCH.

PROVIDE STAPLES MADE OF 0.125 IN. DIAMETER STEEL WIRE FORMED INTO A U SHAPE NOT LESS THAN 12″ IN LENGTH.

INSTALL STAPLES APPROXIMATELY EVERY 1 LINEAR FOOT ON BOTH SIDES OF WATTLE AND AT EACH END TO SECURE IT TO THE SOIL.

INSTALL MATTING IN ACCORDANCE WITH SECTION 1631 OF THE STANDARD SPECIFICATIONS.

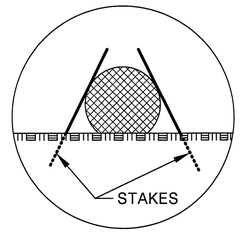


INSET A

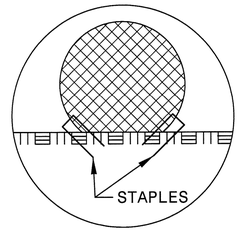


INSET B

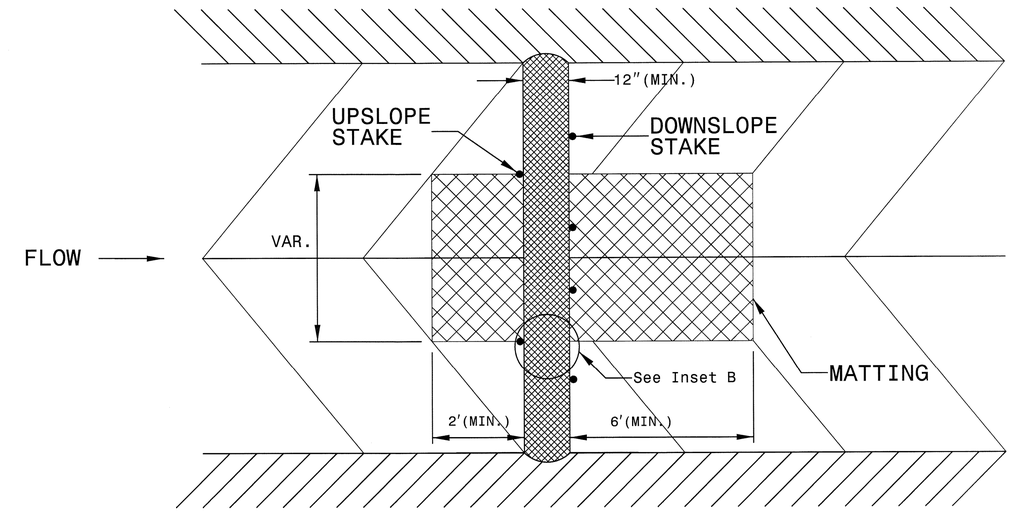


**TOP VIEW**

| PROJECT REFERENCE NO. | SHEET NO. |
|---|---|
| 17BP.3.R.32 | EC-3 |
| R/W SHEET NO. | |
| ROADWAY DESIGN ENGINEER | HYDRAULICS ENGINEER |

# SILT FENCE COIR FIBER WATTLE BREAK DETAIL

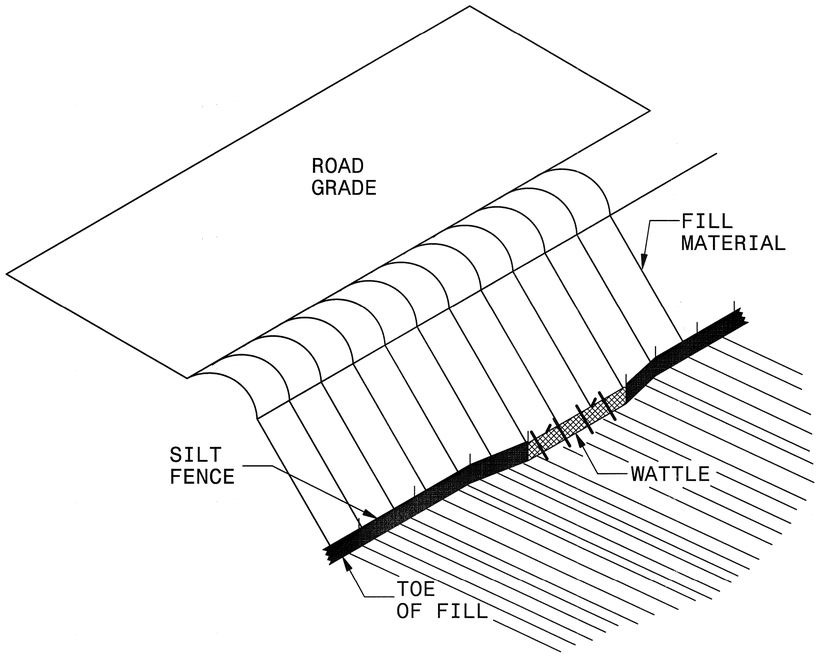


**ISOMETRIC VIEW**

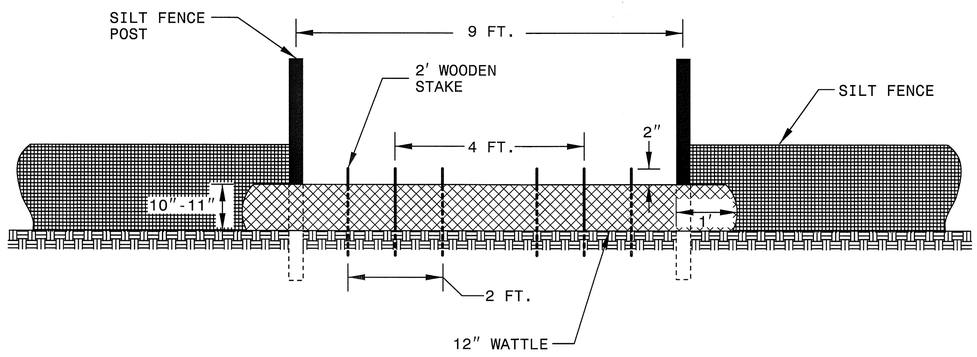


**VIEW FROM SLOPE**

NOTES:

USE MINIMUM 12 IN. DIAMETER COIR FIBER (COCONUT FIBER) WATTLE AND LENGTH OF 10 FT.

EXCAVATE A 1 TO 2 INCH TRENCH FOR WATTLE TO BE PLACED.

DO NOT PLACE WATTLE ON TOE OF SLOPE.

USE 2 FT. WOODEN STAKES WITH A 2 IN. BY 2 IN. NOMINAL CROSS SECTION.

INSTALL A MINIMUM OF 2 UPSLOPE STAKES AND 4 DOWNSLOPE STAKES AT AN ANGLE TO WEDGE WATTLE TO GROUND.

PROVIDE STAPLES MADE OF 0.125 IN. DIAMETER STEEL WIRE FORMED INTO A U SHAPE NOT LESS THAN 12" IN LENGTH.

INSTALL STAPLES APPROXIMATELY EVERY 1 LINEAR FOOT ON BOTH SIDES OF WATTLE AND AT EACH END TO SECURE IT TO THE SOIL.

WATTLE INSTALLATION CAN BE ON OUTSIDE OF THE SILT FENCE AS DIRECTED.

INSTALL TEMPORARY SILT FENCE IN ACCORDANCE WITH SECTION 1605 OF THE STANDARD SPECIFICATIONS.

INSET A

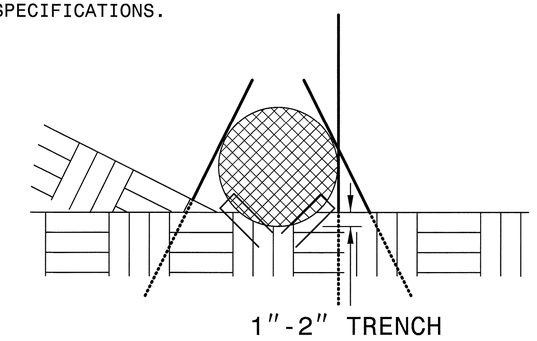


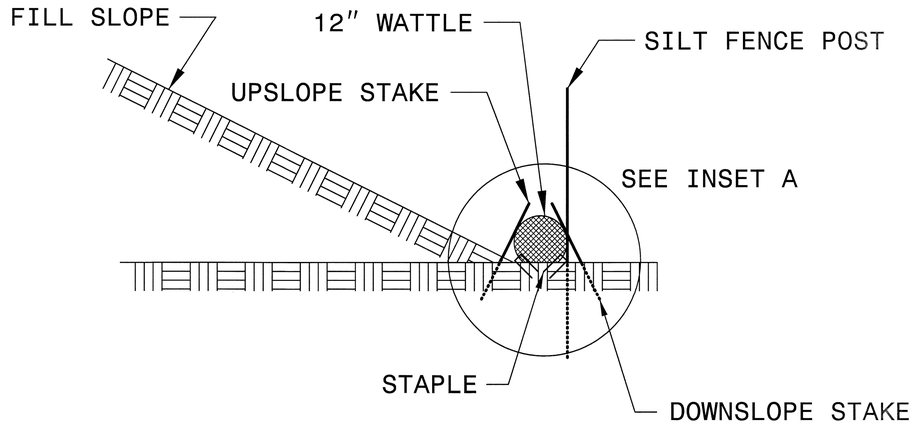


**SIDE VIEW**

| PROJECT REFERENCE NO. | SHEET NO. |
|---|---|
| 17BP.3.R.32 | EC-4 |
| ROADWAY DESIGN ENGINEER | HYDRAULICS ENGINEER |

DIVISION OF HIGHWAYS
STATE OF NORTH CAROLINA

# *SOIL STABILIZATION TIMEFRAMES*

| SITE DESCRIPTION | STABILIZATION TIME | TIMEFRAME EXCEPTIONS |
|---|---|---|
| PERIMETER DIKES, SWALES, DITCHES AND SLOPES | 7 DAYS | NONE |
| HIGH QUALITY WATER (HQW) ZONES | 7 DAYS | NONE |
| SLOPES STEEPER THAN 3:1 | 7 DAYS | IF SLOPES ARE 10' OR LESS IN LENGTH AND ARE NOT STEEPER THAN 2:1, 14 DAYS ARE ALLOWED. |
| SLOPES 3:1 OR FLATTER | 14 DAYS | 7 DAYS FOR SLOPES GREATER THAN 50' IN LENGTH. |
| ALL OTHER AREAS WITH SLOPES FLATTER THAN 4:1 | 14 DAYS | NONE, EXCEPT FOR PERIMETERS AND HQW ZONES. |

| PROJECT REFERENCE NO. | SHEET NO. |
|---|---|
| 17BP.3.R.32 | EC-05/CONST.04 |
| R/W SHEET NO. | |
| ROADWAY DESIGN ENGINEER | HYDRAULICS ENGINEER |

Prepared in the Office of: ECOLOGICAL ENGINEERING
NC FIRM LICENSE No: F-1148
1151 SE Cary Parkway
Suite 101
Cary, NC 27518
(919) 557-0929

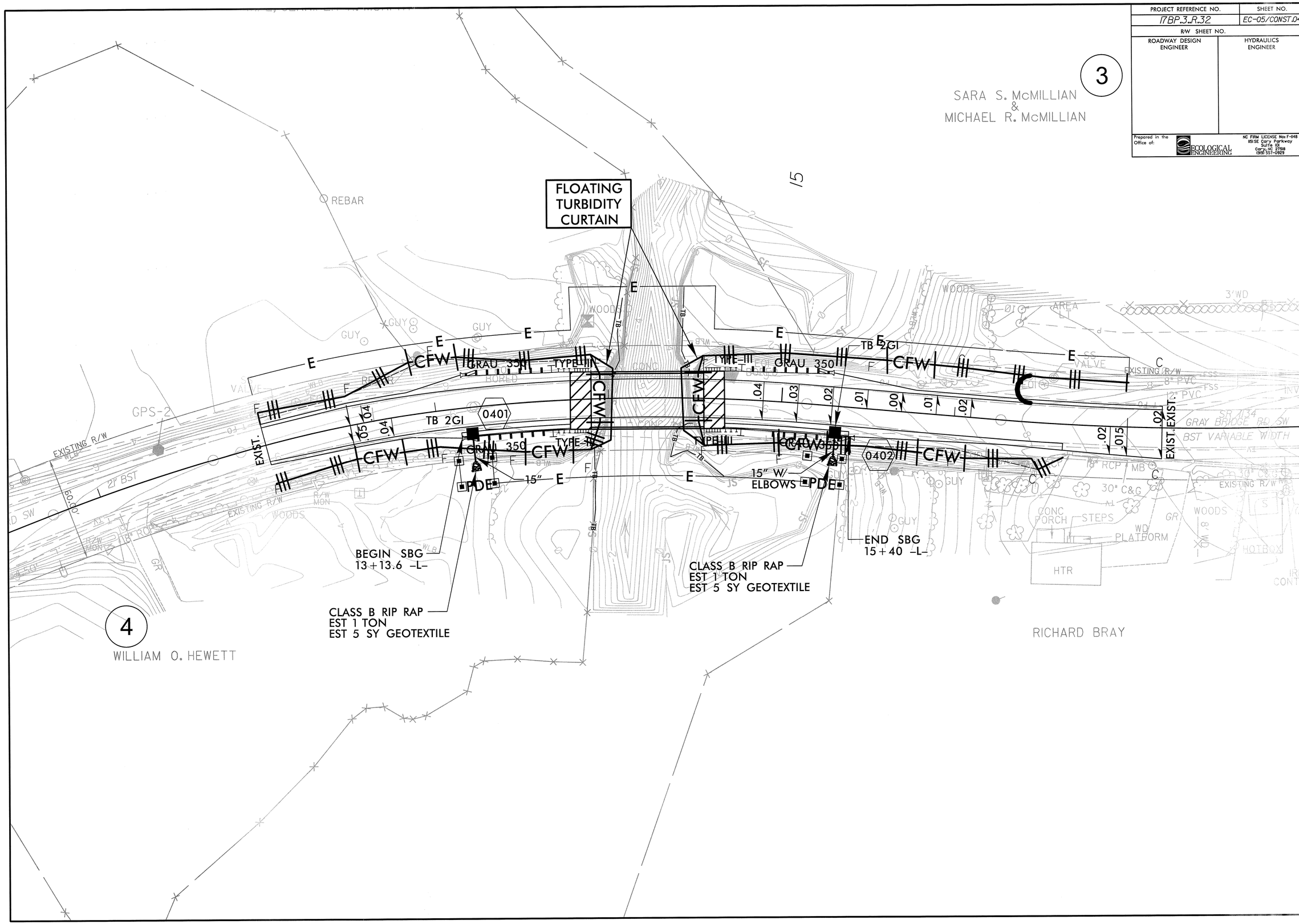

| PROJ. REFERENCE NO. | SHEET NO. |
|---|---|
| 17BP.3.R.32 | X-A |

# STATE OF NORTH CAROLINA
# DIVISION OF HIGHWAYS

NOTE: EMBANKMENT COLUMN INCLUDES BACKFILL FOR UNDERCUT

## *CROSS-SECTION SUMMARY*

| Station<br>L | Uncl. Exc.<br>(cu. yd.) | Embt<br>(cu. yd.) |
|---|---|---|
| 12+00.00 | 0 | 0 |
| 12+50.00 | 13 | 0 |
| 13+00.00 | 9 | 17 |
| 13+50.00 | 3 | 37 |
| 13+75.00 | 0 | 24 |

| Station<br>L | Uncl. Exc.<br>(cu. yd.) | Embt<br>(cu. yd.) |
|---|---|---|
| 14+70.00 | 0 | 0 |
| 15+00.00 | 0 | 30 |
| 15+50.00 | 0 | 33 |
| 16+00.00 | 13 | 11 |
| 16+50.00 | 42 | 0 |
| 17+00.00 | 38 | 0 |
| 17+20.00 | 6 | 0 |

| PROJ. REFERENCE NO. | SHEET NO. |
|---|---|
| 17BP.3.R.32 | X-1 |

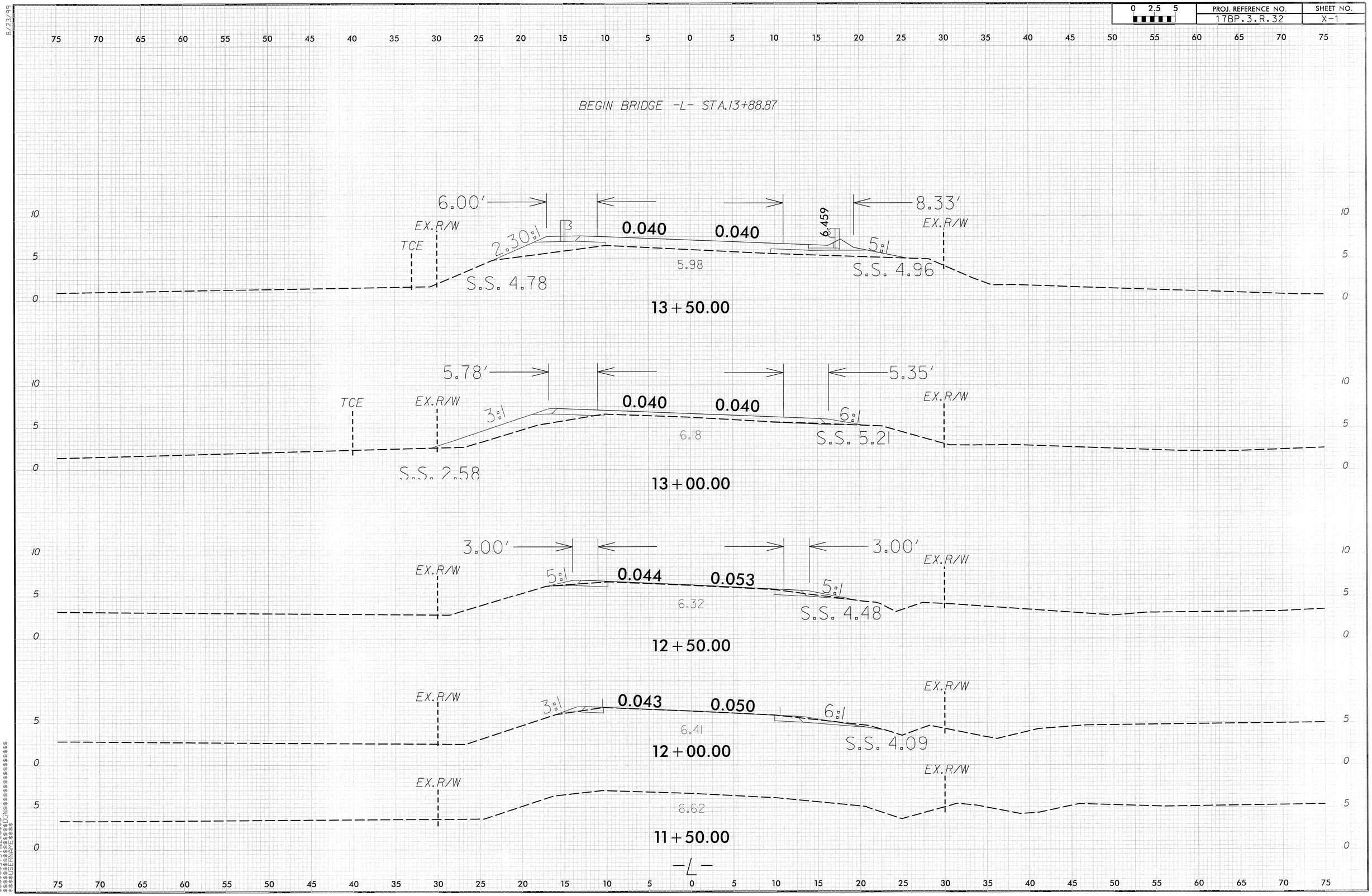

| PROJ. REFERENCE NO. | SHEET NO. |
|---|---|
| 17BP.3.R.32 | X-2 |

8/23/99

$$$$SYSTIME$$$$
$$$$DGN$$$$$$$$$$$$$$$$
$$$$USERNAME$$$$

| 0 2.5 5 | PROJ. REFERENCE NO. | SHEET NO. |
|---|---|---|
| | 17BP.3.R.32 | X-3 |

8/23/99

$$$$SYSTIME$$$$
$$$$DGN$$$$$$$$$$$$$$$$
$$$$USERNAME$$$$

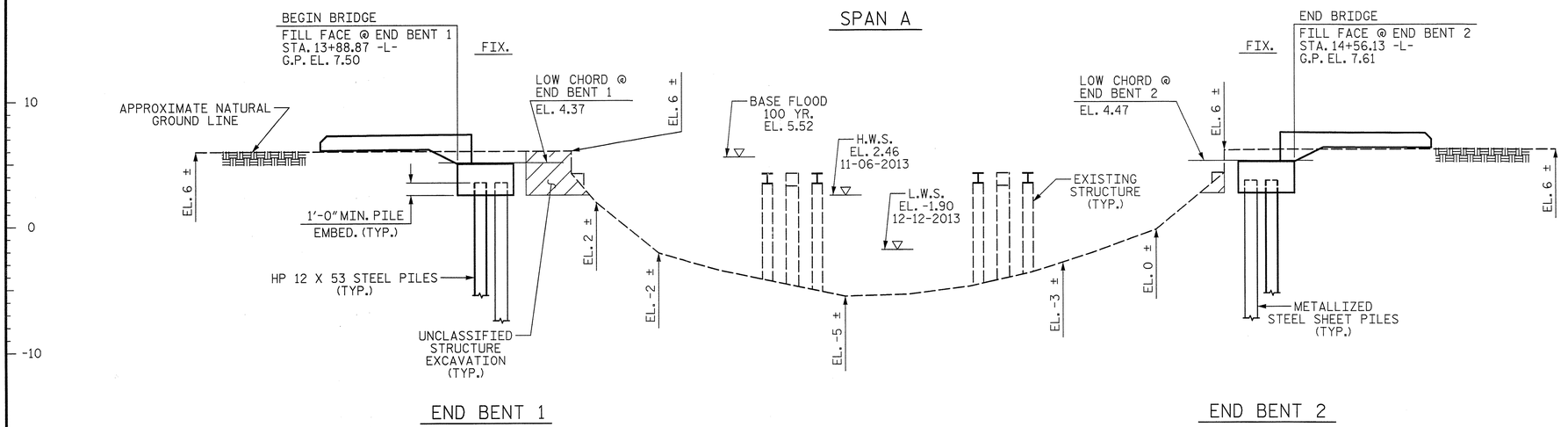


## SECTION ALONG ℄ SURVEY -L-

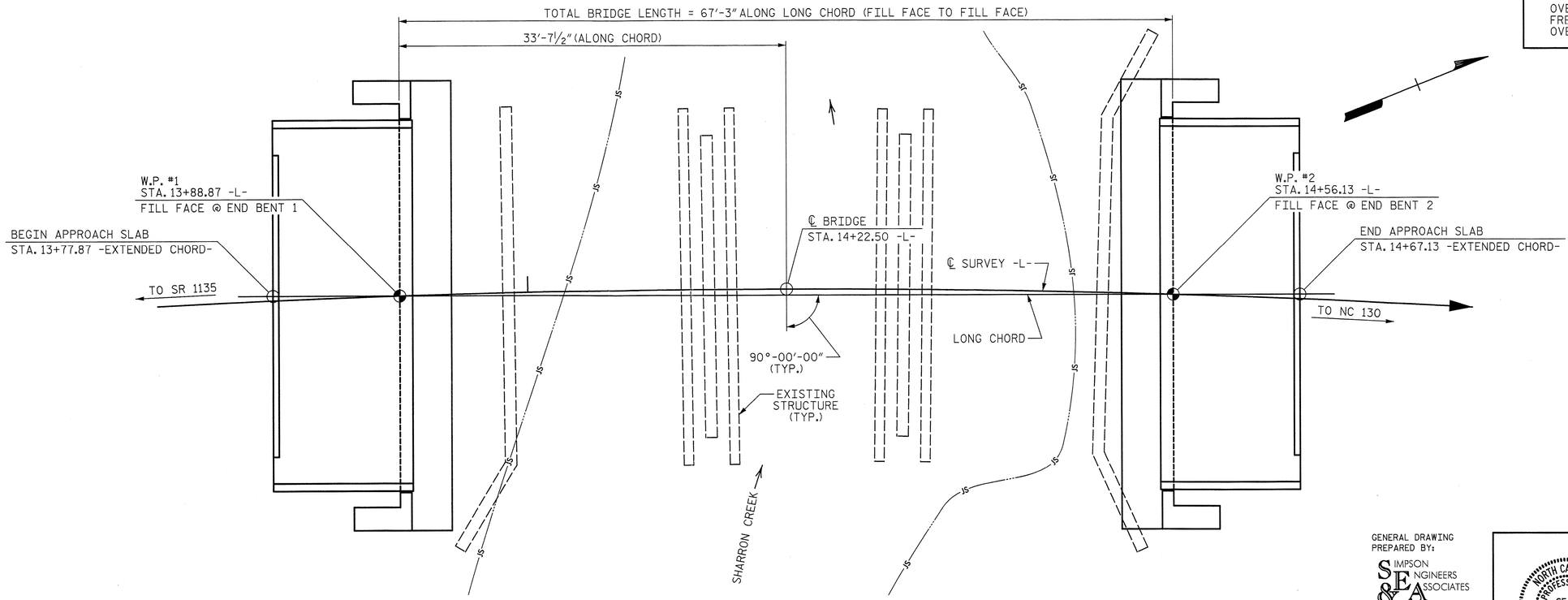


## PLAN

(PILES AND METALLIZED STEEL SHEET PILES NOT SHOWN IN PLAN VIEW)

(+)1.1251% (-)0.7119%

PVI STA. 14+20.00
EL. = 7.90
VC = 112'

GRADE DATA -L-

HORIZONTAL CURVE DATA

PI STA. 14+18.21 -L-
Δ = 10°-30'-07.6" (RT.)
D = 5°-21'-17.1"
L = 196.13'
T = 98.34'
R = 1070.00'

HYDRAULIC DATA:

| | |
|---|---|
| DESIGN DISCHARGE | = 850 CFS |
| FREQUENCY OF DESIGN FLOOD | = 25 YEAR |
| DESIGN HIGH WATER ELEVATION | = 4.60 |
| DRAINAGE AREA | = 8.05 SQ. MI. |
| BASE DISCHARGE (Q 100) | = 1300 CFS |
| BASE HIGH WATER ELEVATION | = 5.52 |

OVERTOPPING FLOOD DATA:

| | |
|---|---|
| OVERTOPPING DISCHARGE | = 1859 CFS |
| FREQUENCY OF OVERTOPPING FLOOD | = 500- YEAR |
| OVERTOPPING FLOOD ELEVATION | = 6.90 |

I HEREBY CERTIFY THESE PLANS ARE THE AS-BUILT PLANS

PROJECT NO. 17BP.3.R.32

BRUNSWICK COUNTY

STATION: 14+22.50 -L-

SHEET 1 OF 2 REPLACES BRIDGE #53

STATE OF NORTH CAROLINA
DEPARTMENT OF TRANSPORTATION
RALEIGH

# GENERAL DRAWING

FOR BRIDGE ON SR 1134 (GRAY BRIDGE RD.) OVER SHARRON CREEK BETWEEN SR 1135 AND NC 130

30'-10" CLEAR ROADWAY - 90° SKEW

| REVISIONS | | | | | | SHEET NO. |
|---|---|---|---|---|---|---|
| NO. | BY: | DATE: | NO. | BY: | DATE: | S-1 |
| 1 | | | 3 | | | TOTAL SHEETS |
| 2 | | | 4 | | | 14 |

DRAWN BY: T. BANKOVICH DATE: 6-14
CHECKED BY: B.S. COX DATE: 6-14
DESIGN ENGINEER OF RECORD: G.M. DICKEY DATE: 6-14

GENERAL DRAWING PREPARED BY:

SIMPSON ENGINEERS & ASSOCIATES
5640 Dillard Drive
Suite 200
Cary, NC 27518
(919) 852-0468
(919) 852-0598 (Fax)
www.simpsonengr.com
LICENSURE NO. C-2521

NORTH CAROLINA PROFESSIONAL SEAL H258 ENGINEER BETSY S. COX
6-17-14

6/17/2014 10:43:06 AM G:\Projects\2014\17BP3R32 (Brunswick 53)\Structures\Drawings\Final\Brunswick 53_smu_gd.dgn

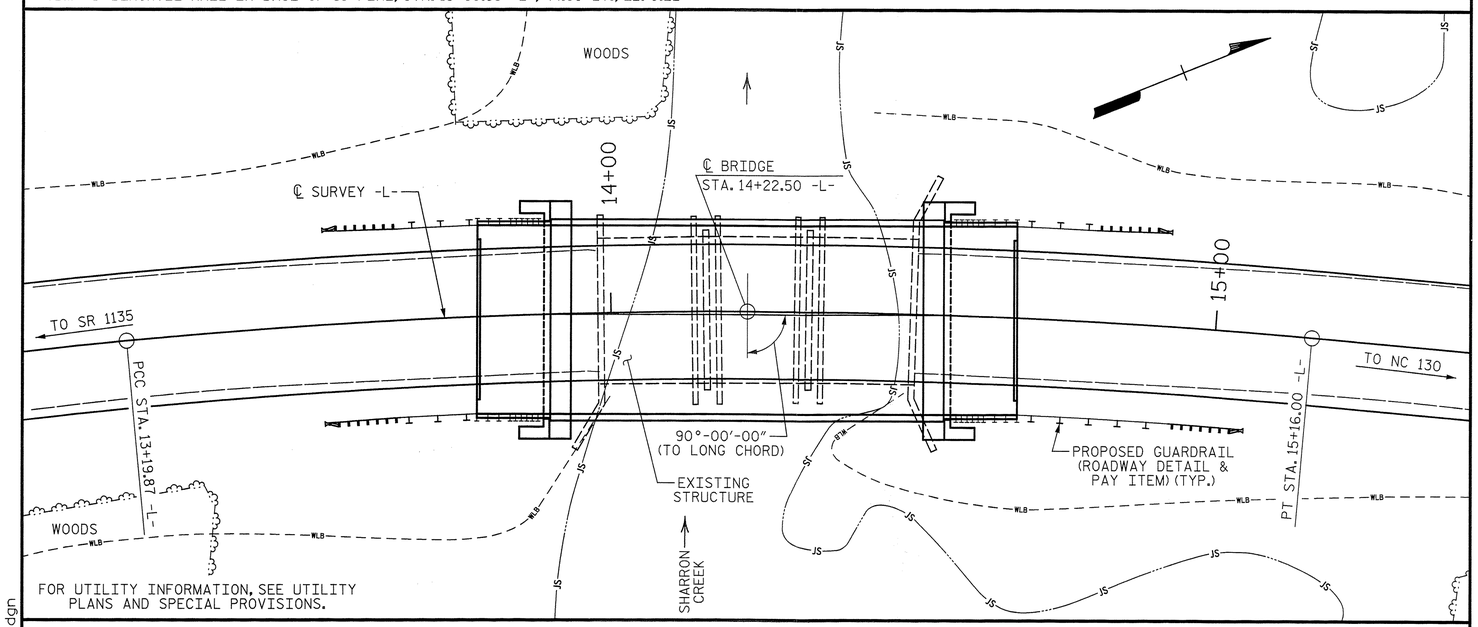


## LOCATION SKETCH

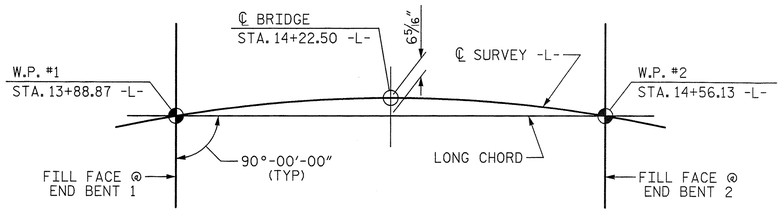


## CHORD LAYOUT

NOTE: THE EFFECTS OF THE HORIZONTAL CURVE SHALL BE NEGLECTED IN THE CONSTRUCTION OF THIS BRIDGE. BRIDGE TO BE BUILT ALONG THE LONG CHORD BETWEEN THE WORK POINTS AT THE FILL FACES.

## FOUNDATION NOTES:

FOR PILES, SEE SECTION 450 OF THE STANDARD SPECIFICATIONS.

PILES AT END BENT 1 AND END BENT 2 ARE DESIGNED FOR A FACTORED RESISTANCE OF 80 TONS PER PILE.

DRIVE PILES AT END BENT 1 AND END BENT 2 TO A REQUIRED DRIVING RESISTANCE OF 135 TONS PER PILE.

STEEL H-PILE POINTS ARE REQUIRED FOR STEEL H-PILES AT END BENT 1 AND END BENT 2. FOR STEEL PILE POINTS, SEE SECTION 450 OF THE STANDARD SPECIFICATIONS.

TESTING PILES WITH THE PILE DRIVING ANALYZER (PDA) DURING DRIVING, RESTRIKING OR REDRIVING MAY BE REQUIRED. THE ENGINEER WILL DETERMINE THE NEED FOR PDA TESTING. FOR PDA TESTING, SEE SECTION 450 OF THE STANDARD SPECIFICATIONS AND FOR PILE DRIVING CRITERIA, SEE PILE DRIVING CRITERIA PROVISION.

INSTALL STEEL SHEET PILES TO A MINIMUM TIP ELEVATION OF -23.0 FT. AT END BENT 1 AND END BENT 2.

FOR SHEET PILES BEING DRIVEN INTO VERY DENSE MATERIALS, A LARGER VIBRO HAMMER OR ANY OTHER SUITABLE HAMMER SHALL BE USED TO OBTAIN THE REQUIRED DEPTH.

INSTALL STEEL SHEET PILES WALLS BEFORE INSTALLING BRIDGE END BENT PILES.

THE SCOUR CRITICAL ELEVATIONS FOR SHEET PILES AT END BENT 1 AND END BENT 2 ARE ELEVATION -12.0 FT. AND -10.5 FT., RESPECTIVELY. SCOUR CRITICAL ELEVATIONS ARE USED TO MONITOR POSSIBLE SCOUR PROBLEMS DURING THE LIFE OF THE STRUCTURE.

FOR STEEL SHEET PILES, SEE SPECIAL PROVISIONS.

STEEL SHEET PILES SHALL BE METALLIZED. FOR THERMAL SPRAYED COATINGS (METALLIZATION), SEE SPECIAL PROVISIONS.

## NOTES:

ASSUMED LIVE LOAD = HL-93 OR ALTERNATE LOADING.

THIS BRIDGE HAS BEEN DESIGNED IN ACCORDANCE WITH THE AASHTO LRFD BRIDGE DESIGN SPECIFICATIONS.

THIS BRIDGE IS LOCATED IN SEISMIC ZONE 2.

THIS STRUCTURE CONTAINS THE NECESSARY CORROSION PROTECTION REQUIRED FOR A CORROSIVE SITE.

FOR OTHER DESIGN DATA AND GENERAL NOTES, SEE SHEET SN.

FOR EROSION CONTROL MEASURES, SEE EROSION CONTROL PLANS.

REMOVAL OF THE EXISTING BRIDGE SHALL BE PERFORMED SO AS NOT TO ALLOW DEBRIS TO FALL INTO THE WATER. THE CONTRACTOR SHALL REMOVE THE BRIDGE AND SUBMIT PLANS FOR DEMOLITION IN ACCORDANCE WITH ARTICLE 402-2 OF THE STANDARD SPECIFICATIONS.

THE MATERIAL SHOWN IN THE CROSS-HATCHED AREA SHALL BE EXCAVATED FOR A DISTANCE OF 55 FT. LEFT AND 25 FT. RIGHT OF CENTERLINE ROADWAY AS DIRECTED BY THE ENGINEER. THIS WORK WILL BE PAID FOR AT THE CONTRACT LUMP SUM PRICE FOR UNCLASSIFIED STRUCTURE EXCAVATION. SEE SECTION 412 OF THE STANDARD SPECIFICATIONS.

THE EXISTING STRUCTURE CONSISTS OF 1 SPAN @ 17.7', 1 SPAN @ 16.6' AND 1 SPAN @ 17.6' WITH A CLEAR ROADWAY WIDTH OF 24 FT. THE SUPERSTRUCTURE CONSISTS OF A REINFORCED CONCRETE DECK ON CREOSOTE TIMBER JOISTS. THE END BENTS AND BENTS ARE TIMBER CAPS ON TIMBER PILES. BENT 1 AND BENT 2 HAVE STEEL CRUTCH BENTS. THE EXISTING STRUCTURE, WHICH IS LOCATED AT THE SITE OF THE PROPOSED STRUCTURE, SHALL BE REMOVED. THE EXISTING BRIDGE IS PRESENTLY POSTED FOR LOAD LIMIT. SHOULD THE STRUCTURAL INTEGRITY OF THE BRIDGE DETERIORATE DURING CONSTRUCTION OF THE PROPOSED BRIDGE, THE LOAD LIMIT MAY BE REDUCED AS NECESSARY DURING THE LIFE OF THE PROJECT.

THE SUBSTRUCTURE OF THE EXISTING BRIDGE INDICATED ON THE PLANS IS FROM THE BEST INFORMATION AVAILABLE. THIS INFORMATION IS SHOWN FOR THE CONVENIENCE OF THE CONTRACTOR. THE CONTRACTOR SHALL HAVE NO CLAIM WHATSOEVER AGAINST THE DEPARTMENT OF TRANSPORTATION FOR ANY DELAYS OR ADDITIONAL COST INCURRED BASED ON DIFFERENCES BETWEEN THE EXISTING BRIDGE SUBSTRUCTURE SHOWN ON THE PLANS AND THE ACTUAL CONDITIONS AT THE PROJECT SITE.

THIS STRUCTURE HAS BEEN DESIGNED IN ACCORDANCE WITH "HEC 18-EVALUATING SCOUR AT BRIDGES."

FOR SUBMITTAL OF WORKING DRAWINGS, SEE SPECIAL PROVISIONS.

FOR FALSEWORK AND FORMWORK, SEE SPECIAL PROVISIONS.

FOR CRANE SAFETY, SEE SPECIAL PROVISIONS.

FOR GROUT FOR STRUCTURES, SEE SPECIAL PROVISIONS.

ASPHALT WEARING SURFACE IS INCLUDED IN ROADWAY QUANTITY ON ROADWAY PLANS.

ALL METALLIZED SURFACES SHALL RECEIVE A SEAL COATING AS SPECIFIED IN THE SPECIAL PROVISION FOR THERMAL SPRAYED COATINGS (METALLIZATION).

CLASS AA CONCRETE SHALL BE USED IN ALL CAST-IN-PLACE END BENT CAPS AND SHALL CONTAIN CALCIUM NITRITE CORROSION INHIBITOR.

ALL BAR SUPPORTS USED IN THE BARRIER RAIL AND END BENT CAPS AND ALL INCIDENTAL REINFORCING STEEL SHALL BE EPOXY COATED IN ACCORDANCE WITH THE STANDARD SPECIFICATIONS.

THE CONCRETE IN END BENT 1 AND END BENT 2 CAPS SHALL CONTAIN SILICA FUME. SILICA FUME SHALL BE SUBSTITUTED FOR 5% OF THE PORTLAND CEMENT BY WEIGHT. IF THE OPTION OF ARTICLE 1024-1 OF THE STANDARD SPECIFICATIONS TO PARTIALLY SUBSTITUTE CLASS F FLY ASH FOR PORTLAND CEMENT IS EXERCISED, THEN THE RATE OF FLY ASH SUBSTITUTION SHALL BE REDUCED TO 1.0 LB OF FLY ASH PER 1.0 LB OF CEMENT. NO PAYMENT WILL BE MADE FOR THIS SUBSTITUTION AS IT IS CONSIDERED INCIDENTAL TO THE VARIOUS PAY ITEMS.

## TOTAL BILL OF MATERIAL

| | REMOVAL OF EXISTING STRUCTURE | PDA TESTING | UNCLASSIFIED STRUCTURE EXCAVATION | CLASS AA CONCRETE | BRIDGE APPROACH SLABS | EPOXY COATED REINFORCING STEEL | HP 12 X 53 STEEL PILES | | STEEL PILE POINTS | PILE REDRIVES | VERTICAL CONCRETE BARRIER RAIL | ELASTOMERIC BEARINGS | 3'-0" X 2'-0" PRESTRESSED CONCRETE CORED SLABS | | STEEL SHEET PILES |
|---|---|---|---|---|---|---|---|---|---|---|---|---|---|---|---|
| | LS | EA | LS | CY | LS | LB | NO. | LF | EA | EA | LF | LS | NO. | LF | SF |
| SUPERSTRUCTURE | | | | | LS | | | | | | 130.25 | LS | 11 | 715.00 | |
| END BENT 1 | | | | 18.5 | | 2,894 | 7 | 315 | 7 | 4 | | | | | 1,532 |
| END BENT 2 | | | | 18.5 | | 2,894 | 7 | 315 | 7 | 4 | | | | | 1,532 |
| | | | | | | | | | | | | | | | |
| TOTAL | LS | 1 | LS | 37.0 | LS | 5,788 | 14 | 630 | 14 | 8 | 130.25 | LS | 11 | 715.00 | 3,064 |

DRAWN BY: T. BANKOVICH DATE: 6-14
CHECKED BY: B.S. COX DATE: 6-14
DESIGN ENGINEER OF RECORD: G.M. DICKEY DATE: 6-14

GENERAL DRAWING PREPARED BY:

SIMPSON ENGINEERS & ASSOCIATES
5640 Dillard Drive
Suite 200
Cary, NC 27518
(919) 852-0468
(919) 852-0598 (Fax)
www.simpsonengr.com
LICENSURE NO. C-2521

NORTH CAROLINA PROFESSIONAL SEAL 032808 ENGINEER BETSY S. COX
Betsy S. Cox 6/17/14

PROJECT NO. 17BP.3.R.32
BRUNSWICK COUNTY
STATION: 14+22.50 -L-

SHEET 2 OF 2

STATE OF NORTH CAROLINA
DEPARTMENT OF TRANSPORTATION
RALEIGH

# GENERAL DRAWING

FOR BRIDGE ON SR 1134 (GRAY BRIDGE RD.) OVER SHARRON CREEK BETWEEN SR 1135 AND NC 130

30'-10" CLEAR ROADWAY - 90° SKEW

| REVISIONS | | | | | | SHEET NO. |
|---|---|---|---|---|---|---|
| NO. | BY: | DATE: | NO. | BY: | DATE: | S-2 |
| 1 | | | 3 | | | TOTAL SHEETS |
| 2 | | | 4 | | | 14 |

6/17/2014 10:43:06 AM G:\Projects\2014\17BP3R32 (Brunswick 53)\Structures\Drawings\Final\Brunswick 53_smu_gd.dgn

# LOAD AND RESISTANCE FACTOR RATING (LRFD) SUMMARY FOR PRESTRESSED CONCRETE GIRDERS

| LEVEL | | VEHICLE | WEIGHT (W) (TONS) | CONTROLLING LOAD RATING | MINIMUM RATING FACTORS (RF) | TONS = W X RF | STRENGTH I LIMIT STATE | | | | | | | | | | | SERVICE III LIMIT STATE | | | | | | COMMENT NUMBER |
|---|---|---|---|---|---|---|---|---|---|---|---|---|---|---|---|---|---|---|---|---|---|---|---|---|
| | | | | | | | | MOMENT | | | | | SHEAR | | | | | | MOMENT | | | | | | |
| | | | | | | | LIVELOAD FACTORS | DISTRIBUTION FACTORS (DF) | RATING FACTOR | SPAN | GIRDER LOCATION | DISTANCE FROM LEFT END OF SPAN (ft) | DISTRIBUTION FACTORS (DF) | RATING FACTOR | SPAN | GIRDER LOCATION | DISTANCE FROM LEFT END OF SPAN (ft) | LIVELOAD FACTORS | DISTRIBUTION FACTORS (DF) | RATING FACTOR | SPAN | GIRDER LOCATION | DISTANCE FROM LEFT END OF SPAN (ft) | |
| DESIGN LOAD RATING | | HL-93(Inv) | N/A | **1** | 1.018 | -- | 1.75 | 0.274 | 1.05 | 65' | EL | 32 | 0.513 | 1.2 | 65' | EL | 6.4 | 0.80 | 0.274 | **1.02** | 65' | EL | **32** | |
| | | HL-93(Opr) | N/A | -- | 1.358 | -- | 1.35 | 0.274 | 1.36 | 65' | EL | 32 | 0.513 | 1.56 | 65' | EL | 6.4 | N/A | -- | -- | -- | -- | -- | |
| | | HS-20(Inv) | 36.000 | **2** | 1.306 | 47.014 | 1.75 | 0.274 | 1.34 | 65' | EL | 32 | 0.513 | 1.48 | 65' | EL | 6.4 | 0.80 | 0.274 | **1.31** | 65' | EL | **32** | |
| | | HS-20(Opr) | 36.000 | -- | 1.742 | 62.706 | 1.35 | 0.274 | 1.74 | 65' | EL | 32 | 0.513 | 1.92 | 65' | EL | 6.4 | N/A | -- | -- | -- | -- | -- | |
| LEGAL LOAD RATING | SV | SNSH | 13.500 | -- | 2.868 | 38.725 | 1.4 | 0.274 | 3.69 | 65' | EL | 32 | 0.513 | 4.33 | 65' | EL | 6.4 | 0.80 | 0.274 | 2.87 | 65' | EL | 32 | |
| | | SNGARBS2 | 20.000 | -- | 2.171 | 43.424 | 1.4 | 0.274 | 2.79 | 65' | EL | 32 | 0.513 | 3.11 | 65' | EL | 6.4 | 0.80 | 0.274 | 2.17 | 65' | EL | 32 | |
| | | SNAGRIS2 | 22.000 | -- | 2.071 | 45.552 | 1.4 | 0.274 | 2.66 | 65' | EL | 32 | 0.513 | 2.89 | 65' | EL | 6.4 | 0.80 | 0.274 | 2.07 | 65' | EL | 32 | |
| | | SNCOTTS3 | 27.250 | -- | 1.428 | 38.924 | 1.4 | 0.274 | 1.84 | 65' | EL | 32 | 0.513 | 2.17 | 65' | EL | 6.4 | 0.80 | 0.274 | 1.43 | 65' | EL | 32 | |
| | | SNAGGRS4 | 34.925 | -- | 1.206 | 42.136 | 1.4 | 0.274 | 1.55 | 65' | EL | 32 | 0.513 | 1.81 | 65' | EL | 6.4 | 0.80 | 0.274 | 1.21 | 65' | EL | 32 | |
| | | SNS5A | 35.550 | -- | 1.179 | 41.911 | 1.4 | 0.274 | 1.52 | 65' | EL | 32 | 0.513 | 1.85 | 65' | EL | 6.4 | 0.80 | 0.274 | 1.18 | 65' | EL | 32 | |
| | | SNS6A | 39.950 | -- | 1.087 | 43.43 | 1.4 | 0.274 | 1.4 | 65' | EL | 32 | 0.513 | 1.69 | 65' | EL | 6.4 | 0.80 | 0.274 | 1.09 | 65' | EL | 32 | |
| | | SNS7B | 42.000 | -- | 1.035 | 43.489 | 1.4 | 0.274 | 1.33 | 65' | EL | 32 | 0.513 | 1.67 | 65' | EL | 6.4 | 0.80 | 0.274 | 1.04 | 65' | EL | 32 | |
| | TTST | TNAGRIT3 | 33.000 | -- | 1.327 | 43.8 | 1.4 | 0.274 | 1.71 | 65' | EL | 32 | 0.513 | 2.01 | 65' | EL | 6.4 | 0.80 | 0.274 | 1.33 | 65' | EL | 32 | |
| | | TNT4A | 33.075 | -- | 1.335 | 44.142 | 1.4 | 0.274 | 1.72 | 65' | EL | 32 | 0.513 | 1.95 | 65' | EL | 6.4 | 0.80 | 0.274 | 1.33 | 65' | EL | 32 | |
| | | TNT6A | 41.600 | -- | 1.096 | 45.613 | 1.4 | 0.274 | 1.41 | 65' | EL | 32 | 0.513 | 1.8 | 65' | EL | 6.4 | 0.80 | 0.274 | 1.10 | 65' | EL | 32 | |
| | | TNT7A | 42.000 | -- | 1.105 | 46.4 | 1.4 | 0.274 | 1.42 | 65' | EL | 32 | 0.513 | 1.74 | 65' | EL | 6.4 | 0.80 | 0.274 | 1.10 | 65' | EL | 32 | |
| | | TNT7B | 42.000 | -- | 1.15 | 48.298 | 1.4 | 0.274 | 1.48 | 65' | EL | 32 | 0.513 | 1.62 | 65' | EL | 6.4 | 0.80 | 0.274 | 1.15 | 65' | EL | 32 | |
| | | TNAGRIT4 | 43.000 | -- | 1.089 | 46.815 | 1.4 | 0.274 | 1.4 | 65' | EL | 32 | 0.513 | 1.57 | 65' | EL | 6.4 | 0.80 | 0.274 | 1.09 | 65' | EL | 32 | |
| | | TNAGT5A | 45.000 | -- | 1.024 | 46.084 | 1.4 | 0.274 | 1.32 | 65' | EL | 32 | 0.513 | 1.57 | 65' | EL | 6.4 | 0.80 | 0.274 | 1.02 | 65' | EL | 32 | |
| | | TNAGT5B | 45.000 | **3** | 1.01 | 45.431 | 1.4 | 0.274 | 1.3 | 65' | EL | 32 | 0.513 | 1.49 | 65' | EL | 6.4 | 0.80 | 0.274 | **1.01** | 65' | EL | **32** | |

## LOAD FACTORS:

| DESIGN LOAD RATING FACTORS | LIMIT STATE | $\gamma_{DC}$ | $\gamma_{DW}$ |
|---|---|---|---|
| | STRENGTH I | 1.25 | 1.50 |
| | SERVICE III | 1.00 | 1.00 |

## NOTES:

MINIMUM RATING FACTORS ARE BASED ON THE STRENGTH I AND SERVICE III LIMIT STATES.

ALLOWABLE STRESSES FOR SERVICE III LIMIT STATE ARE AS REQUIRED FOR DESIGN.

## COMMENTS:

1.
2.
3.
4.

(#) CONTROLLING LOAD RATING

(1) DESIGN LOAD RATING (HL-93)

(2) DESIGN LOAD RATING (HS-20)

(3) LEGAL LOAD RATING **

** SEE CHART FOR VEHICLE TYPE

GIRDER LOCATION

I - INTERIOR GIRDER
EL - EXTERIOR LEFT GIRDER
ER - EXTERIOR RIGHT GIRDER

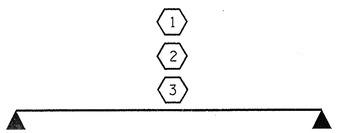


LRFR SUMMARY

FOR SPAN 'A'

PROJECT NO. 17BP.3.R.32

BRUNSWICK COUNTY

STATION: 14+22.50 -L-

STATE OF NORTH CAROLINA
DEPARTMENT OF TRANSPORTATION
RALEIGH

STANDARD

LRFR SUMMARY FOR 65' CORED SLAB UNIT 90° SKEW

(NON-INTERSTATE TRAFFIC)

NORTH CAROLINA PROFESSIONAL SEAL 21271 ENGINEER GREGORY W. DICKEY
6-6-14

| REVISIONS | | | | | |
|---|---|---|---|---|---|
| NO. | BY: | DATE: | NO. | BY: | DATE: |
| 1 | | | 3 | | |
| 2 | | | 4 | | |

SHEET NO. S-3

TOTAL SHEETS -

ASSEMBLED BY : P.N.HOLDER DATE : 04/14
CHECKED BY : G.W.DICKEY DATE : 4/30/14

DRAWN BY : CVC 6/10
CHECKED BY : DNS 6/10

06-JUN-2014 12:02
S:\DPGI\Division3\17BP3R32\pnholder\Plans\17BP3R32_SD_CS_Str53.dgn

STD. NO. 24LRFR1_90S_65L

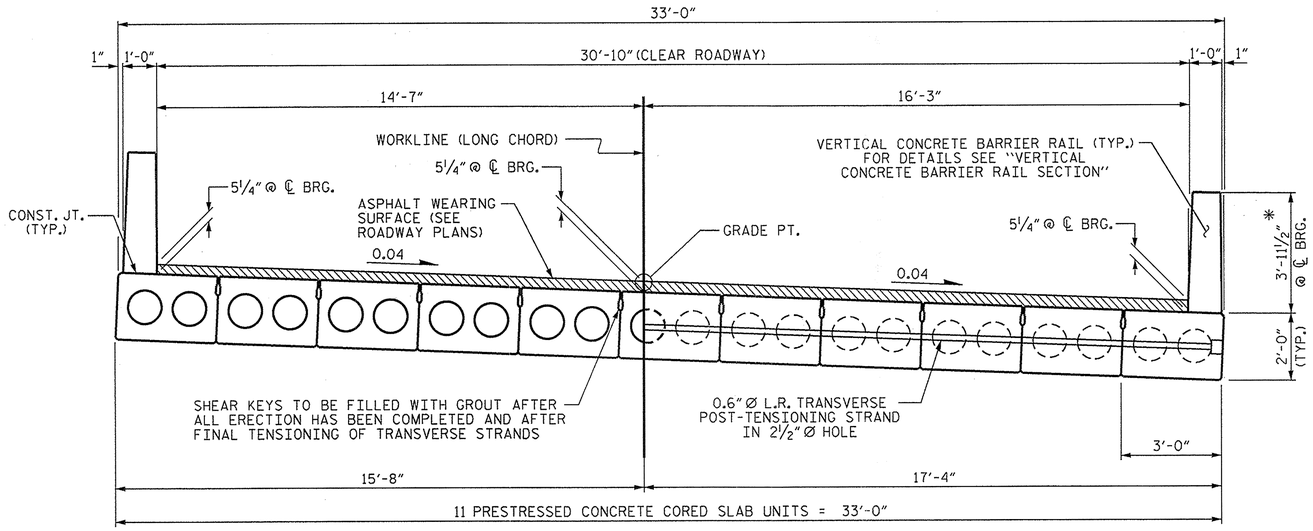


HALF SECTION AT INTERMEDIATE DIAPHRAGMS

HALF SECTION THROUGH VOIDS

## TYPICAL SECTION

* - THE MAXIMUM BARRIER RAIL HEIGHT AND ASPHALT THICKNESS IS SHOWN. THE HEIGHT OF THE BARRIER RAIL AND ASPHALT THICKNESS VARIES WHILE THE TOP OF THE BARRIER RAIL FOLLOWS THE PROFILE OF THE GUTTERLINE. FOR RAIL HEIGHT DETAILS AND ASPHALT THICKNESS, SEE THE "VERTICAL CONCRETE BARRIER RAIL SECTION" DETAIL.

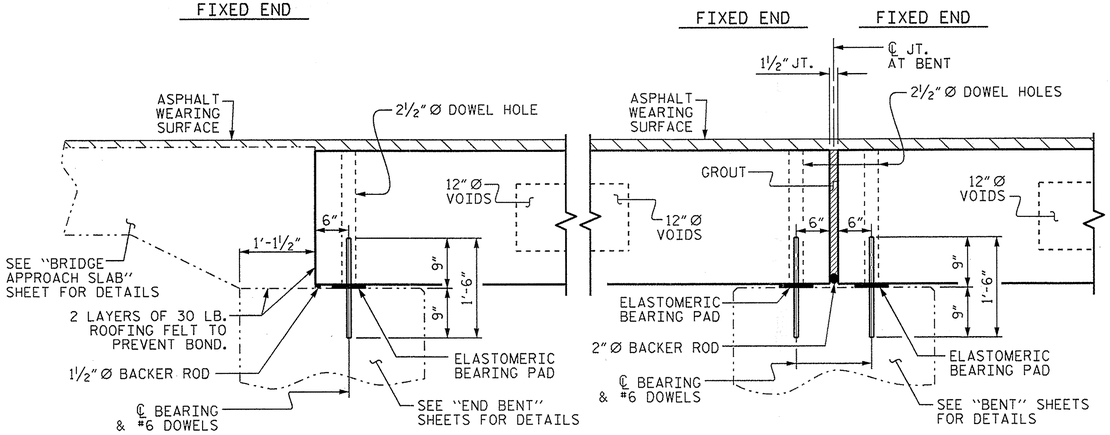


## SECTION AT END BENT

## SECTION AT BENT

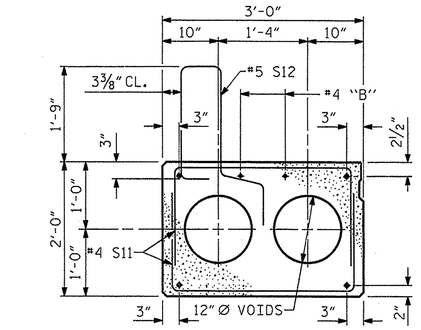


## EXTERIOR SLAB SECTION

(FOR PRESTRESSED STRAND LAYOUT, SEE INTERIOR SLAB SECTION.)

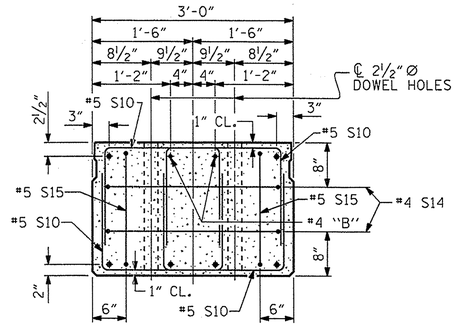


## END ELEVATION

SHOWING PLACEMENT OF DOUBLE STIRRUPS AND LOCATION OF DOWEL HOLES. (STRAND LAYOUT NOT SHOWN.) INTERIOR SLAB UNIT SHOWN-EXTERIOR SLAB UNIT SIMILAR EXCEPT SHEAR KEY LOCATION.

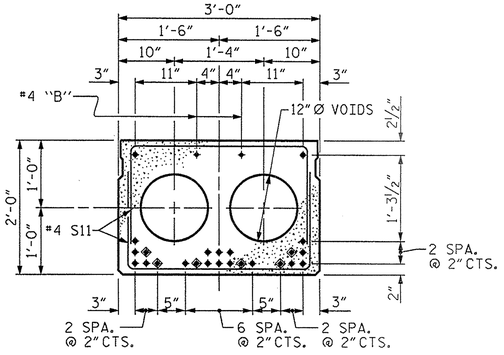


## INTERIOR SLAB SECTION (65' UNIT)

(24 STRANDS REQUIRED)

## 0.6'' Ø LOW RELAXATION STRAND LAYOUT

◈ BOND SHALL BE BROKEN ON THESE STRANDS FOR A DISTANCE OF 12'-0" FROM END OF CORED SLAB UNIT. SEE STANDARD SPECIFICATIONS, ARTICLE 1078-7.

## DEBONDING LEGEND

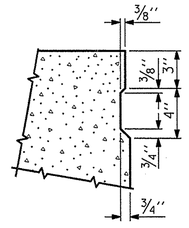


## SHEAR KEY DETAIL

NOTE: OMIT SHEAR KEY ON OUTSIDE FACE OF EXTERIOR CORED SLABS.

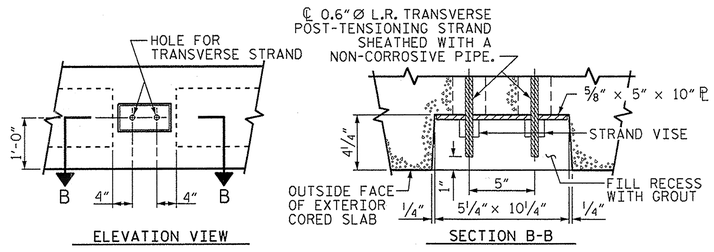


## GROUTED RECESS AT END OF POST-TENSIONED STRAND CORED SLABS

PROJECT NO. 17BP.3.R.32

BRUNSWICK COUNTY

STATION: 14+22.50 -L-

SHEET 1 OF 3

STATE OF NORTH CAROLINA
DEPARTMENT OF TRANSPORTATION
RALEIGH

STANDARD

# 3'-0'' X 2'-0'' PRESTRESSED CONCRETE CORED SLAB UNIT

NORTH CAROLINA PROFESSIONAL SEAL 21271 ENGINEER GREGORY W. DICKEY

6-6-14

| ASSEMBLED BY : P.N.HOLDER | DATE : 04/14 |
|---|---|
| CHECKED BY : G.W.DICKEY | DATE : 4/14 |
| DRAWN BY : MAA 6/10 | REV. 12/11 MAA/AAC |
| CHECKED BY : MKT 7/10 | |

| REVISIONS | | | | | | SHEET NO. |
|---|---|---|---|---|---|---|
| NO. | BY: | DATE: | NO. | BY: | DATE: | S-4 |
| 1 | | | 3 | | | TOTAL SHEETS |
| 2 | | | 4 | | | - |

06-JUN-2014 13:50

STD. NO. 24PCS4.33.90S

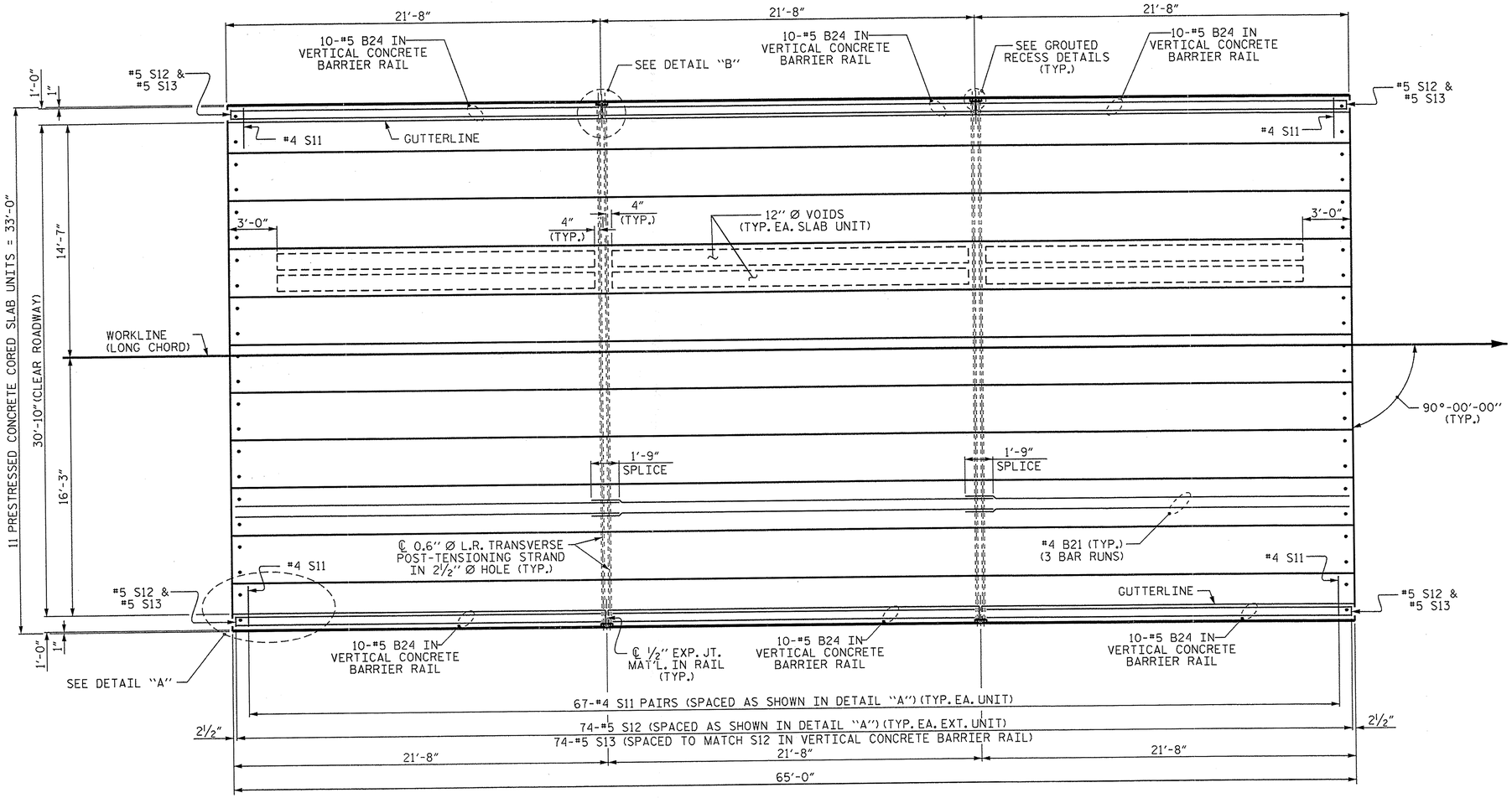


## PLAN OF UNIT

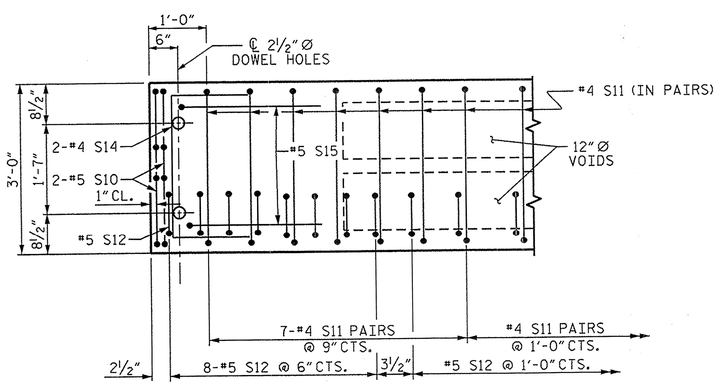


## DETAIL "A"

NOTE: EXTERIOR UNIT SHOWN - INTERIOR UNIT SIMILAR EXCEPT OMIT #5 S12 BARS.

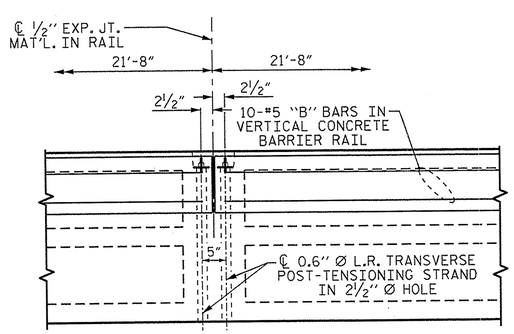


## DETAIL "B"

#4 S11 BARS MAY BE SHIFTED AS NECESSARY TO MAINTAIN 1" CLEAR TO GROUTED RECESS AND 2½" Ø TRANSVERSE POST-TENSIONING STRAND HOLES

| | | | |
|---|---|---|---|
| ASSEMBLED BY : | P.N.HOLDER | DATE : | 04/09/14 |
| CHECKED BY : | G.W. DICKEY | DATE : | 4/30/14 |
| DRAWN BY : | MAA | 6/10 | REV. 12/5/11 MAA/AAC |
| CHECKED BY : | MKT | 7/10 | |

06-JUN-2014 12:02
S:\DPGI\Division3\17BP3R32\pnholder\Plans\17BP3R32_SD_CS_Str53.dgn

PROJECT NO. 17BP.3.R.32
BRUNSWICK COUNTY
STATION: 14+22.50 -L-

SHEET 2 OF 3

STATE OF NORTH CAROLINA
DEPARTMENT OF TRANSPORTATION
RALEIGH

# PLAN OF 65' UNIT 30'-10" CLEAR ROADWAY 90° SKEW

NORTH CAROLINA PROFESSIONAL SEAL 21271 ENGINEER GREGORY W. DICKEY
6-6-14

| REVISIONS | | | | | | SHEET NO. |
|---|---|---|---|---|---|---|
| NO. | BY: | DATE: | NO. | BY: | DATE: | S-5 |
| 1 | | | 3 | | | TOTAL SHEETS |
| 2 | | | 4 | | | - |

STD NO. 24PCS 33 90S 65L

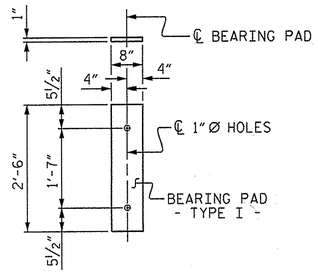


FIXED END
( TYPE I - 22 REQ'D )

# ELASTOMERIC BEARING DETAILS

ELASTOMER IN ALL BEARINGS SHALL BE 60 DUROMETER HARDNESS.

## BILL OF MATERIAL FOR ONE 65' CORED SLAB UNIT

| | | | | EXTERIOR UNIT | | INTERIOR UNIT | |
|---|---|---|---|---|---|---|---|
| BAR | NUMBER | SIZE | TYPE | LENGTH | WEIGHT | LENGTH | WEIGHT |
| B21 | 6 | #4 | STR | 22'-10" | 92 | 22'-10" | 92 |
| | | | | | | | |
| S10 | 8 | #5 | 3 | 4'-9" | 40 | 4'-9" | 40 |
| S11 | 134 | #4 | 3 | 5'-10" | 522 | 5'-10" | 522 |
| ✱S12 | 74 | #5 | 1 | 6'-4" | 489 | | |
| S14 | 4 | #4 | 3 | 5'-7" | 15 | 5'-7" | 15 |
| S15 | 4 | #5 | 3 | 7'-1" | 30 | 7'-1" | 30 |
| | | | | | | | |
| | | | | | | | |
| | | | | | | | |
| REINFORCING STEEL | | | LBS. | | 699 | | 699 |
| ✱EPOXY COATED REINFORCING STEEL | | | LBS. | | 489 | | |
| 6000 P.S.I. CONCRETE | | | CU. YDS. | | 11.0 | | 11.0 |
| | | | | | | | |
| 0.6"Ø L.R. STRANDS | | | No. | | 24 | | 24 |

## BAR TYPES

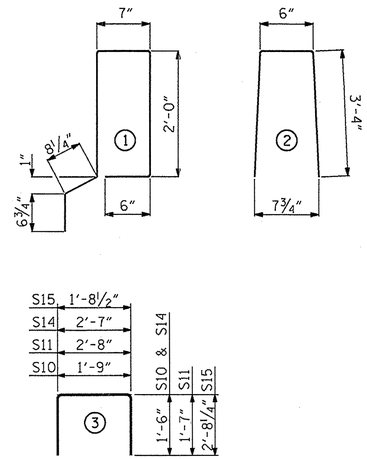


ALL BAR DIMENSIONS ARE OUT TO OUT

## NOTES

ALL PRESTRESSING STRANDS SHALL BE 7-WIRE LOW RELAXATION GRADE 270 STRANDS AND SHALL CONFORM TO AASHTO M203 EXCEPT FOR SAMPLING REQUIREMENTS WHICH SHALL BE IN ACCORDANCE WITH THE STANDARD SPECIFICATIONS.

ALL REINFORCING STEEL CAST WITH THE CORED SLAB SECTIONS SHALL BE GRADE 60 AND SHALL BE INCLUDED IN THE UNIT PRICE BID FOR PRESTRESSED CONCRETE CORED SLABS.

RECESSES FOR TRANSVERSE STRANDS SHALL BE GROUTED AFTER THE TENSIONING OF THE STRANDS.

THE 2½"Ø DOWEL HOLES AT FIXED ENDS OF SLAB SECTIONS SHALL BE FILLED WITH NON-SHRINK GROUT.

THE BACKER RODS SHALL CONFORM TO THE REQUIREMENTS OF TYPE M BOND BREAKER. SEE SECTION 1028 OF THE STANDARD SPECIFICATIONS.

WHEN CORED SLABS ARE CAST, AN INTERNAL HOLD-DOWN SYSTEM SHALL BE EMPLOYED TO PREVENT VOIDS FROM RISING OR MOVING SIDEWAYS. AT LEAST SIX WEEKS PRIOR TO CASTING CORED SLABS, THE CONTRACTOR SHALL SUBMIT TO THE ENGINEER FOR REVIEW AND COMMENT, DETAILED DRAWINGS OF THE PROPOSED HOLD-DOWN SYSTEM. IN ADDITION TO STRUCTURAL DETAILS, LOCATION AND SPACING OF THE HOLD-DOWNS SHALL BE INDICATED.

THE TRANSFER OF LOAD FROM THE ANCHORAGES TO THE CORED SLAB UNIT SHALL BE DONE WHEN THE CONCRETE HAS REACHED A COMPRESSIVE STRENGTH OF NOT LESS THAN THE REQUIRED STRENGTH SHOWN IN THE "CONCRETE RELEASE STRENGTH" TABLE.

ALL REINFORCING STEEL IN VERTICAL CONCRETE BARRIER RAILS SHALL BE EPOXY COATED.

PRESTRESSING STRANDS SHALL BE CUT FLUSH WITH THE CORED SLAB UNIT ENDS.

APPLY EPOXY PROTECTIVE COATING TO CORED SLAB UNIT ENDS.

GROOVED CONTRACTION JOINTS, ½" IN DEPTH, SHALL BE TOOLED IN ALL EXPOSED FACES OF THE BARRIER RAIL AND IN ACCORDANCE WITH ARTICLE 825-10(B) OF THE STANDARD SPECIFICATIONS. A CONTRACTION JOINT SHALL BE LOCATED AT EACH THIRD POINT BETWEEN BARRIER RAIL EXPANSION JOINTS. ONLY ONE CONTRACTION JOINT IS REQUIRED AT MIDPOINT OF BARRIER RAIL SEGMENTS LESS THAN 20 FEET IN LENGTH AND NO CONTRACTION JOINTS ARE REQUIRED FOR THOSE SEGMENTS LESS THAN 10 FEET IN LENGTH.

TRANSVERSE POST TENSIONING OF THE CORED SLAB UNITS SHALL BE DONE IN ACCORDANCE WITH THE STANDARD SPECIFICATIONS.

MAINTAIN A SYMMETRIC TENSION FORCE BETWEEN EACH PAIR OF TRANSVERSE POST TENSIONING STRANDS IN THE DIAPHRAGM.

THE #4 S11 STIRRUPS MAY BE SHIFTED AS NECESSARY TO MAINTAIN 1" CLEAR TO THE GROUTED RECESS.

FOR GROUT FOR STRUCTURES, SEE SPECIAL PROVISIONS.

PRESTRESSED CONCRETE CORED SLAB UNITS ARE DESIGNED FOR 0 PSI TENSION IN THE PRECOMPRESSED TENSILE ZONE UNDER ALL LOADING CONDITIONS.

PRESTRESSED CONCRETE CORED SLAB UNITS SHALL CONTAIN CALCIUM NITRITE CORROSION INHIBITOR IN ACCORDANCE WITH THE STANDARD SPECIFICATIONS.

## CORED SLABS REQUIRED

| | NUMBER | LENGTH | TOTAL LENGTH |
|---|---|---|---|
| 65' UNIT | | | |
| EXTERIOR C.S. | 2 | 65'-0" | 130'-0" |
| INTERIOR C.S. | 9 | 65'-0" | 585'-0" |
| TOTAL | | | 715'-0" |

## BILL OF MATERIAL FOR VERTICAL CONCRETE BARRIER RAIL

| BAR | BARS PER PAIR OF EXTERIOR UNITS | TOTAL NO. | SIZE | TYPE | LENGTH | WEIGHT |
|---|---|---|---|---|---|---|
| | 65' UNIT | | | | | |
| | | | | | | |
| ✱B24 | 60 | 60 | #5 | STR | 21'-3" | 1330 |
| | | | | | | |
| ✱S13 | 148 | 148 | #5 | 2 | 7'-2" | 1106 |
| | | | | | | |
| ✱EPOXY COATED REINFORCING STEEL | | | | LBS. | | 2436 |
| CLASS AA CONCRETE | | | | CU.YDS. | | 17.6 |
| TOTAL VERTICAL CONCRETE BARRIER RAIL | | | | LN. FT. | | 130.25 |

## DEAD LOAD DEFLECTION AND CAMBER

| | 3'-0" x 2'-0" |
|---|---|
| 65' CORED SLAB UNIT | 0.6"Ø L.R. STRAND |
| CAMBER ( SLAB ALONE IN PLACE ) | 3⅜" ↑ |
| DEFLECTION DUE TO SUPERIMPOSED DEAD LOAD✱✱ | ½" ↓ |
| FINAL CAMBER | 2⅞" ↑ |

✱✱ INCLUDES FUTURE WEARING SURFACE

## GUTTERLINE ASPHALT THICKNESS & RAIL HEIGHT

| | ASPHALT OVERLAY THICKNESS @ MID-SPAN | RAIL HEIGHT @ MID-SPAN |
|---|---|---|
| | | |
| 65' UNITS | 2⅜" | 3'-8⅝" |

## GRADE 270 STRANDS

| | 0.6"Ø L.R. |
|---|---|
| AREA ( SQUARE INCHES ) | 0.217 |
| ULTIMATE STRENGTH ( LBS. PER STRAND ) | 58,600 |
| APPLIED PRESTRESS ( LBS. PER STRAND ) | 43,950 |

## CONCRETE RELEASE STRENGTH

| | |
|---|---|
| UNIT | PSI |
| 65' UNITS | 4800 |

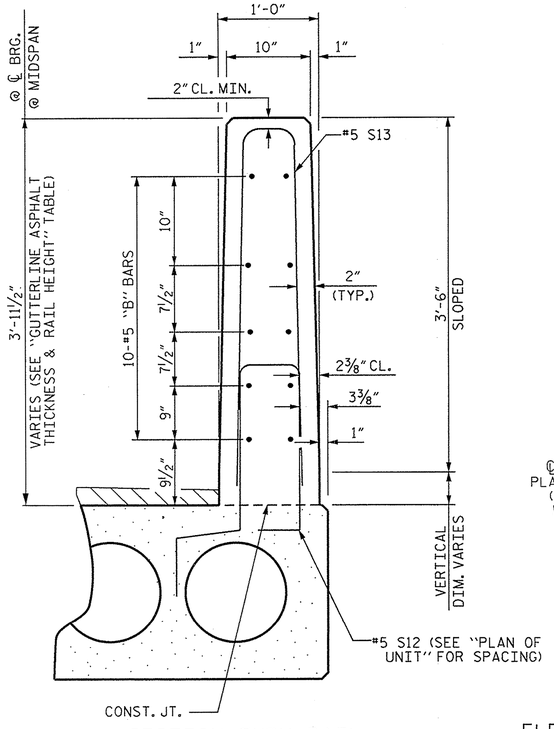


SECTION THRU RAIL

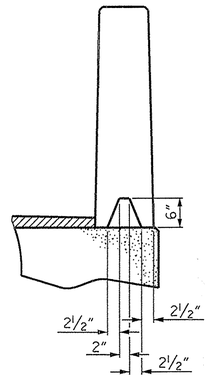


SECTION S-S
AT DAM IN OPEN JOINT
(THIS IS TO BE USED ONLY WHEN SLIP FORM IS USED)

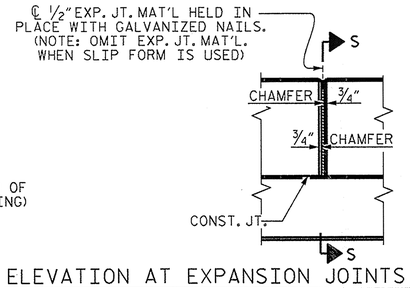


ELEVATION AT EXPANSION JOINTS

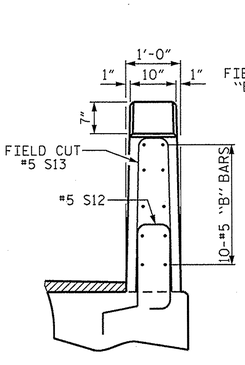


END VIEW

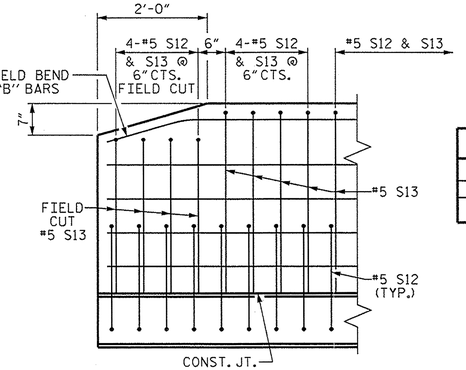


SIDE VIEW

# VERTICAL CONCRETE BARRIER RAIL DETAILS

# END OF RAIL DETAILS

| | | | |
|---|---|---|---|
| ASSEMBLED BY : P.N.HOLDER | DATE :04/09/14 | REV. 12/11 MAA/AAC | |
| CHECKED BY : G.W.DICKEY | DATE : 4/30/14 | | |
| DRAWN BY : MAA 6/10 | | | |
| CHECKED BY : MKT 7/10 | | | |

NORTH CAROLINA PROFESSIONAL SEAL 21271 ENGINEER GREGORY W. DICKEY
6-6-14

PROJECT NO. 17BP.3.R.32
BRUNSWICK COUNTY
STATION: 14+22.50 -L-

SHEET 3 OF 3

STATE OF NORTH CAROLINA
DEPARTMENT OF TRANSPORTATION
RALEIGH

STANDARD
3'-0" X 2'-0"
PRESTRESSED CONCRETE
CORED SLAB UNIT

| REVISIONS | | | | | | SHEET NO. |
|---|---|---|---|---|---|---|
| NO. | BY: | DATE: | NO. | BY: | DATE: | S-6 |
| 1 | | | 3 | | | TOTAL SHEETS |
| 2 | | | 4 | | | - |

STD. NO. 24PCS3 33 90S

06-JUN-2014 12:01
S:\DPGI\Division3\17BP3R32\pnholder\Plans\17BP3R32_SD_CS_Str53.dgn

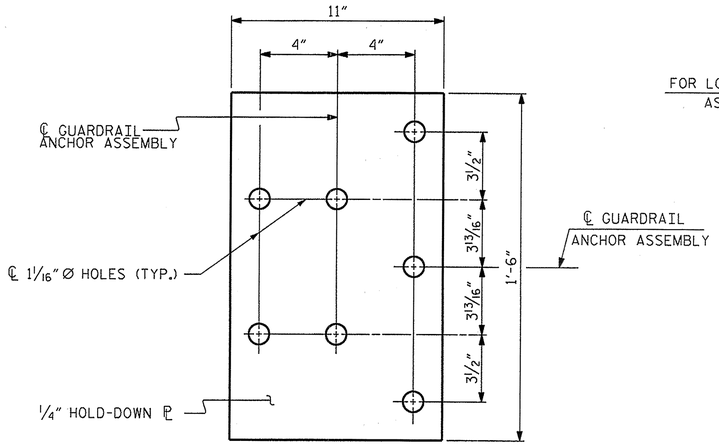


PLAN

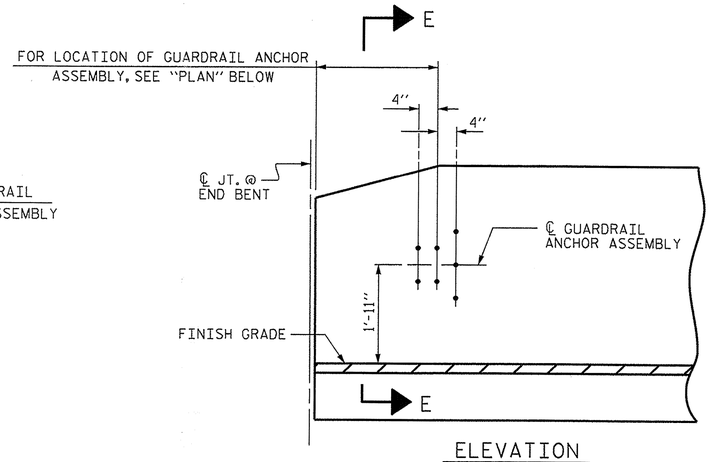


ELEVATION

## NOTES

THE GUARDRAIL ANCHOR ASSEMBLY SHALL CONSIST OF A 1/4" HOLD DOWN PLATE AND 7 - 7/8" Ø BOLTS WITH NUTS AND WASHERS.

THE HOLD-DOWN PLATE SHALL CONFORM TO AASHTO M270 GRADE 36. AFTER FABRICATION, THE HOLD-DOWN PLATE SHALL BE HOT-DIP GALVANIZED IN ACCORDANCE WITH AASHTO M111.

BOLTS SHALL CONFORM TO THE REQUIREMENTS OF ASTM A307 AND NUTS SHALL CONFORM TO THE REQUIREMENTS OF AASHTO M291. BOLTS, NUTS AND WASHERS SHALL BE GALVANIZED. (AT THE CONTRACTOR'S OPTION, STAINLESS STEEL BOLTS, NUTS AND WASHERS MAY BE USED AS AN ALTERNATE FOR THE 7/8" Ø GALVANIZED BOLTS, NUTS AND WASHERS. THEY SHALL CONFORM TO OR EXCEED THE MECHANICAL REQUIREMENTS OF ASTM A307. THE USE OF THIS ALTERNATE SHALL BE APPROVED BY THE ENGINEER.)

THE GUARDRAIL ANCHOR ASSEMBLY IS REQUIRED AT ALL POINTS WHERE APPROACH GUARDRAIL IS TO BE ATTACHED TO THE END OF BARRIER RAIL. FOR POINTS OF ATTACHMENT, SEE SKETCH.

AFTER INSTALLATION, THE EXPOSED THREAD OF THE BOLT SHALL BE BURRED WITH A SHARP POINTED TOOL.

THE COST OF THE GUARDRAIL ANCHOR ASSEMBLY SHALL BE INCLUDED IN THE UNIT CONTRACT PRICE BID FOR VERTICAL CONCRETE BARRIER RAIL.

THE VERTICAL REINFORCING BARS MAY BE SHIFTED SLIGHTLY IN THE VERTICAL CONCRETE BARRIER RAIL TO CLEAR ASSEMBLY BOLTS.

THE 1 1/4" Ø HOLES SHALL BE FORMED OR DRILLED WITH A CORE BIT. IMPACT TOOLS WILL NOT BE PERMITTED. ANY CONCRETE DAMAGED BY THIS WORK SHALL BE REPAIRED TO THE SATISFACTION OF THE ENGINEER.

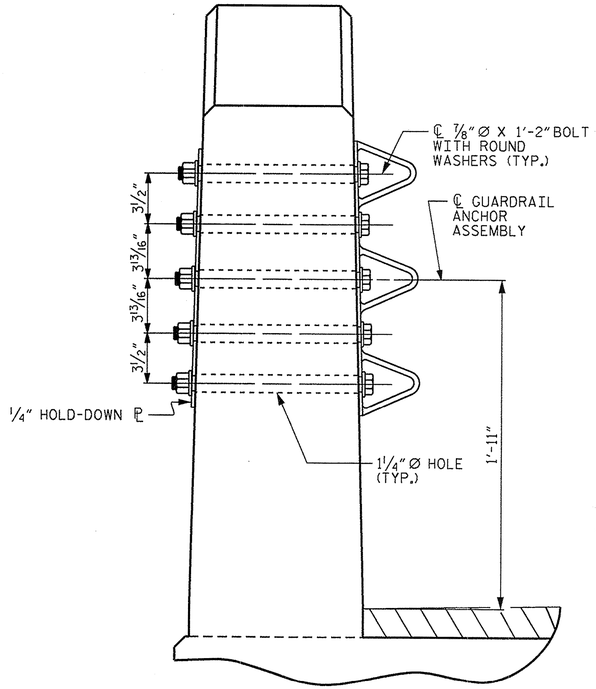


SECTION E-E

## GUARDRAIL ANCHOR ASSEMBLY DETAILS

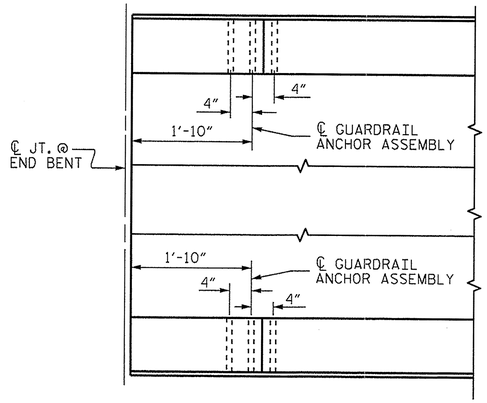


PLAN

## LOCATION OF ANCHORS FOR GUARDRAIL

END BENT #1 SHOWN, END BENT #2 SIMILAR.

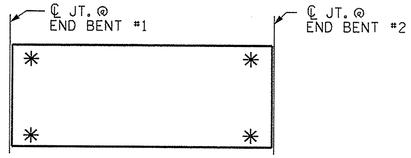


## SKETCH SHOWING POINTS OF ATTACHMENT

✳ DENOTES GUARDRAIL ANCHOR ASSEMBLY

PROJECT NO. 17BP.3.R.32

BRUNSWICK COUNTY

STATION: 14+22.50 -L-

STATE OF NORTH CAROLINA
DEPARTMENT OF TRANSPORTATION
RALEIGH

STANDARD
GUARDRAIL ANCHORAGE FOR VERTICAL CONCRETE BARRIER RAIL

NORTH CAROLINA PROFESSIONAL SEAL 21271 ENGINEER GREGORY W. DICKEY
6-6-14

| REVISIONS | | | | | | SHEET NO. |
|---|---|---|---|---|---|---|
| NO. | BY: | DATE: | NO. | BY: | DATE: | S-7 |
| 1 | | | 3 | | | TOTAL SHEETS |
| 2 | | | 4 | | | - |

| | | |
|---|---|---|
| ASSEMBLED BY : P.N.HOLDER | DATE : 04/09/14 | |
| CHECKED BY : G.W.DICKEY | DATE : 4/30/14 | |
| DRAWN BY : MAA 5/10 | REV. 10/1/11 | MAA/GM |
| CHECKED BY : GM 5/10 | REV. 12/5/11 | MAA/GM |
| | REV. 6/13 | MAA/GM |

06-JUN-2014 12:02
S:\DPG\Division3\17BP3R32\anholder\Plans\17BP3R32_SD_CS_Str53.dgn

(SHT. 1) STD. NO. CRA3

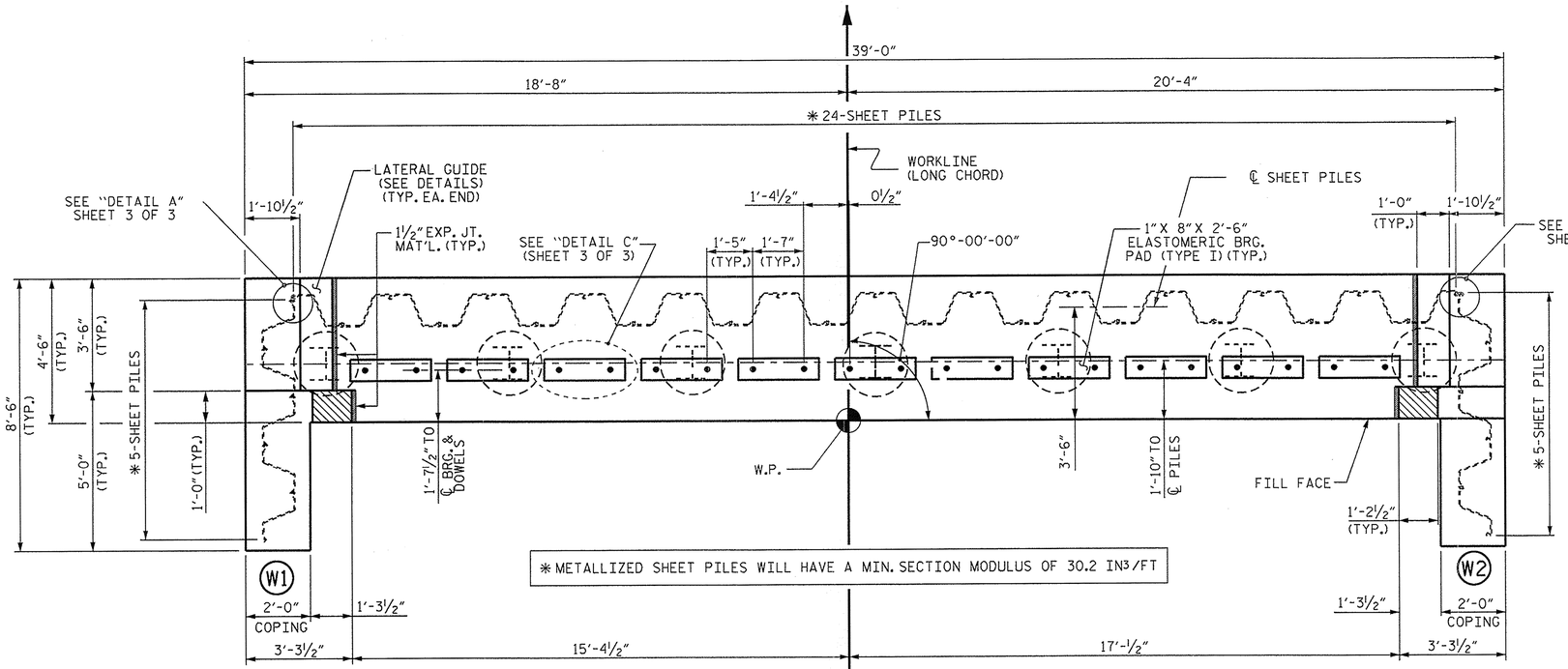


*METALLIZED SHEET PILES WILL HAVE A MIN. SECTION MODULUS OF 30.2 IN³/FT

## PLAN

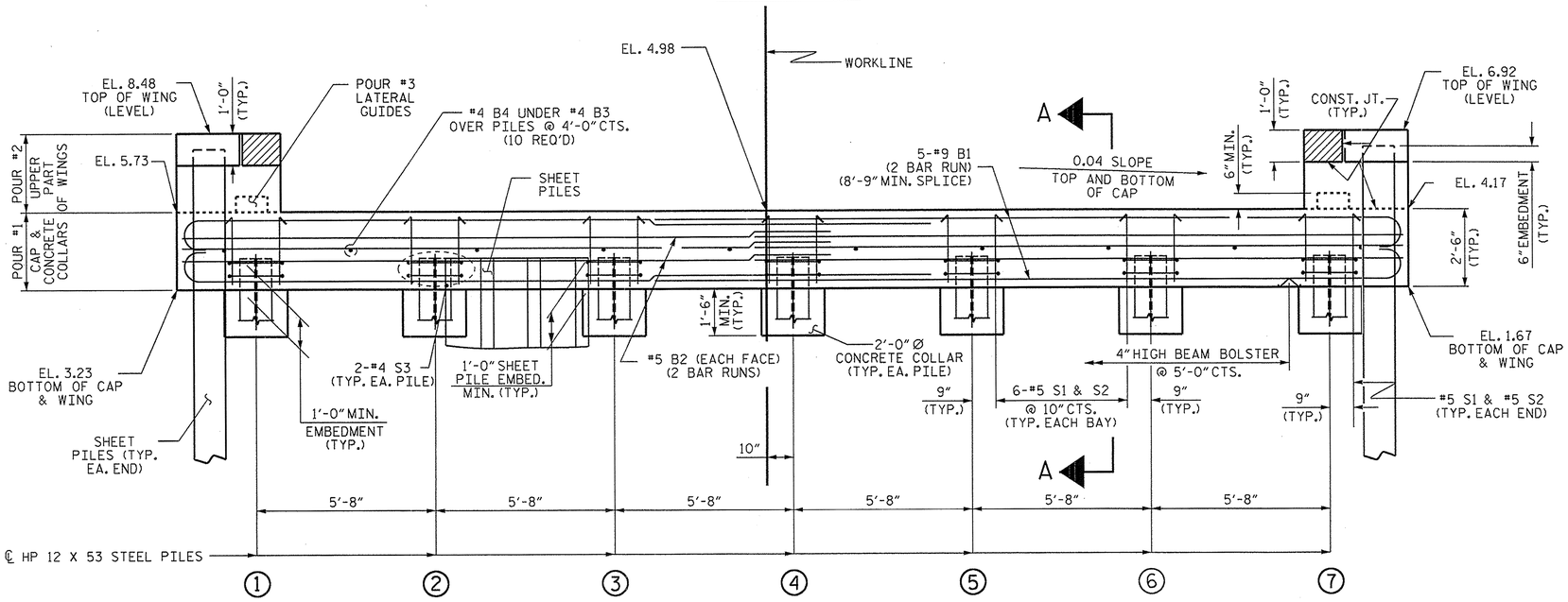


## ELEVATION

NOT ALL SHEET PILING SHOWN FOR CLARITY.
FOR SECTION A-A, SEE SHEET 3 OF 3.

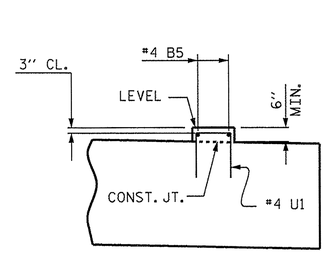


## ELEVATION

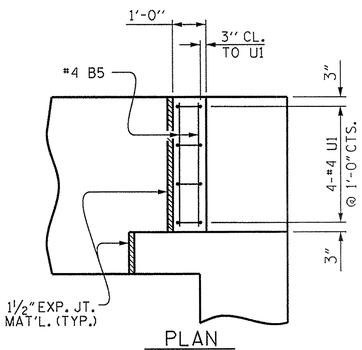


## PLAN

## LATERAL GUIDE

(RIGHT SIDE SHOWN, LEFT SIDE SIMILAR)

## NOTES

STIRRUPS IN CAP MAY BE SHIFTED AS NECESSARY TO CLEAR DOWELS.

THE LATERAL GUIDES ARE NOT TO BE POURED UNTIL AFTER THE CORED SLAB UNITS ARE IN PLACE.

THE CONCRETE IN THE SHADED AREA OF THE WING SHALL BE POURED AFTER THE VERTICAL CONCRETE BARRIER RAIL IS CAST IF SLIP FORMING IS USED.

THE CONTRACTOR HAS THE OPTION TO OMIT THE LATERAL GUIDE IF APPROVED BY THE ENGINEER.

INSTALL THE 4"Ø DRAIN PIPE THROUGH THE SHEET PILES AS REQUIRED FOR REINFORCED BRIDGE APPROACH FILLS, SEE THE ROADWAY PLANS.

FOR PILE SPLICE DETAILS, SEE SHEET 3 OF 3.

ALL 2"Ø MAX. HOLES IN STEEL SHEET PILING TO BE DRILLED AND NOT BURNED.

SHEET PILES ARE TO BE METALLIZED.

THE CONCRETE IN THE END BENT CAP SHALL CONTAIN SILICA FUME. SILICA FUME SHALL BE SUBSTITUTED FOR 5% OF THE PORTLAND CEMENT BY WEIGHT. IF THE OPTION OF ARTICLE 1024-1 OF THE STANDARD SPECIFICATIONS TO PARTIALLY SUBSTITUTE CLASS F FLY ASH FOR PORTLAND CEMENT IS EXERCISED, THEN THE RATE OF FLY ASH SUBSTITUTION SHALL BE REDUCED TO 1.0 LB OF FLY ASH PER 1.0 LB OF CEMENT. NO PAYMENT WILL BE MADE FOR THIS SUBSTITUTION AS IT IS CONSIDERED INCIDENTAL TO THE VARIOUS PAY ITEMS.

## TOP OF PILE ELEVATIONS

| | |
|---|---|
| ① | 4.15 |
| ② | 3.92 |
| ③ | 3.70 |
| ④ | 3.47 |
| ⑤ | 3.24 |
| ⑥ | 3.02 |
| ⑦ | 2.79 |

NORTH CAROLINA PROFESSIONAL SEAL 21271 ENGINEER GREGORY W. DICKEY
6-6-14

PROJECT NO. 17BP.3.R.32
BRUNSWICK COUNTY
STATION: 14+22.50 -L-

SHEET 1 OF 3

STATE OF NORTH CAROLINA
DEPARTMENT OF TRANSPORTATION
RALEIGH

SUBSTRUCTURE

END BENT No. 1

| REVISIONS | | | | | | SHEET NO. |
|---|---|---|---|---|---|---|
| NO. | BY: | DATE: | NO. | BY: | DATE: | S-8 |
| 1 | | | 3 | | | TOTAL SHEETS |
| 2 | | | 4 | | | - |

DRAWN BY : P.N.HOLDER DATE : 04/14
CHECKED BY : G.W.DICKEY DATE : 6/14
DESIGN ENGINEER OF RECORD : P.N.HOLDER DATE : 04/14

09-JUN-2014 12:18
S:\DPBS\Division03\17BP3R32\pnholder\Plans\17BP3R32_SD_CS_Str53.dgn

STD. NO. EB 33.00S

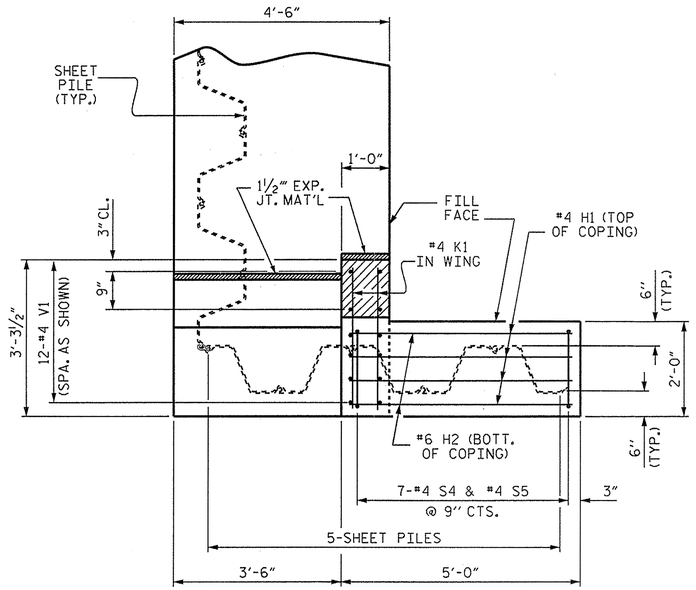


## PLAN - COPING (W1)

DRILL 2" Ø MAX. HOLE IN SHEET PILES FOR #9 B1, #5 B2, #4 K1, AND #4 S5 BARS

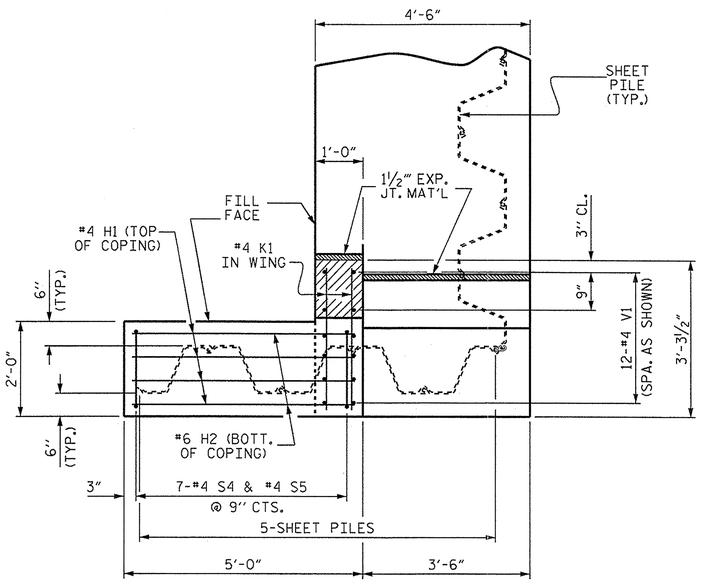


## PLAN - COPING (W2)

DRILL 2" Ø MAX. HOLE IN SHEET PILES FOR #9 B1, #5 B2, #4 K1, AND #4 S5 BARS

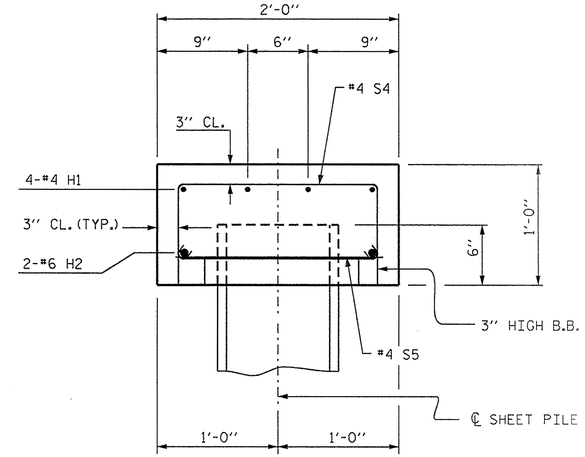


## SECTION THRU COPING

DRILL 2" Ø MAX HOLE IN SHEET PILES FOR #4 S5 BAR

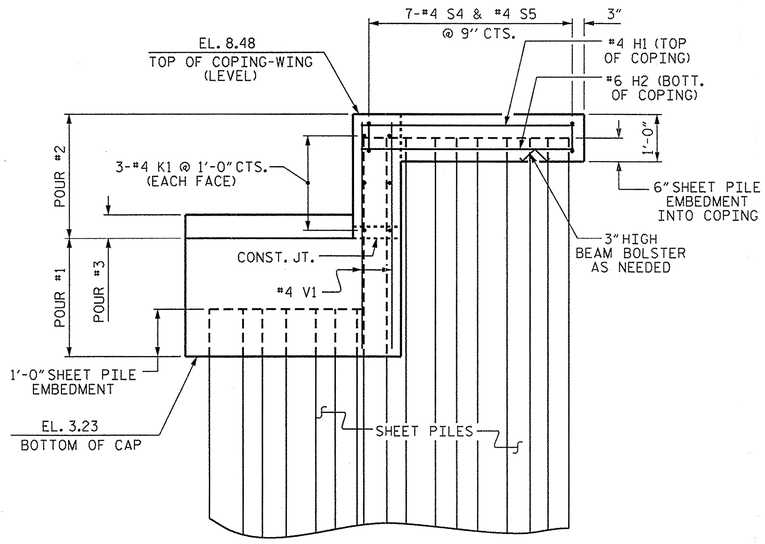


## ELEVATION - COPING (W1)

DRILL 2" Ø MAX. HOLE IN SHEET PILES FOR #9 B1, #5 B2, #4 K1, AND #4 S5 BARS
"V" BARS MAY BE SHIFTED SLIGHTLY TO AVOID SHEET PILES

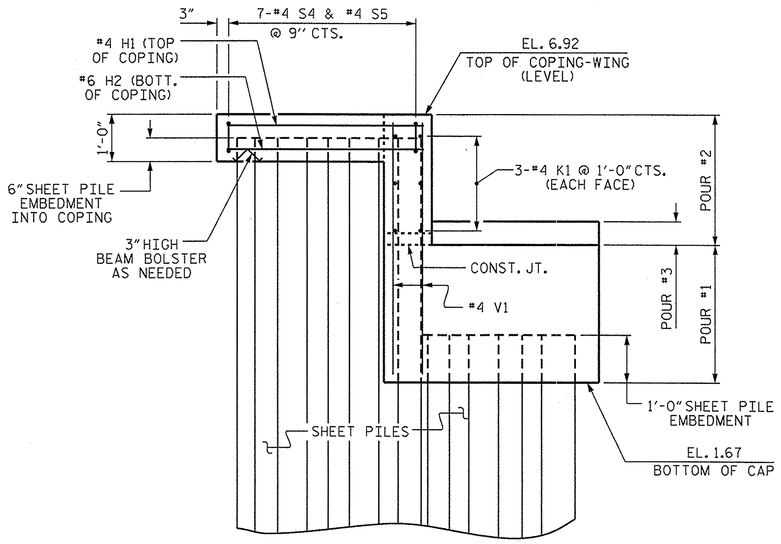


## ELEVATION - COPING (W2)

DRILL 2" Ø MAX. HOLE IN SHEET PILES FOR #9 B1, #5 B2, #4 K1, AND #4 S5 BARS
"V" BARS MAY BE SHIFTED SLIGHTLY TO AVOID SHEET PILES

PROJECT NO. 17BP.3.R.32
BRUNSWICK COUNTY
STATION: 14+22.50 -L-

SHEET 2 OF 3

STATE OF NORTH CAROLINA
DEPARTMENT OF TRANSPORTATION
RALEIGH

SUBSTRUCTURE
END BENT 1

NORTH CAROLINA PROFESSIONAL SEAL 21271 ENGINEER GREGORY W. DICKEY
6-6-14

| REVISIONS | | | | | | SHEET NO. |
|---|---|---|---|---|---|---|
| NO. | BY: | DATE: | NO. | BY: | DATE: | S-9 |
| 1 | | | 3 | | | TOTAL SHEETS |
| 2 | | | 4 | | | - |

DRAWN BY : P.N.HOLDER DATE : 04/14
CHECKED BY : G.W.DICKEY DATE : 6/14
DESIGN ENGINEER OF RECORD : P.N.HOLDER DATE : 04/14

06-JUN-2014 12:02
S:\DPGI\Division3\17BP3R32\pnholder\Plans\17BP3R32_SO_CS_Str53.dgn

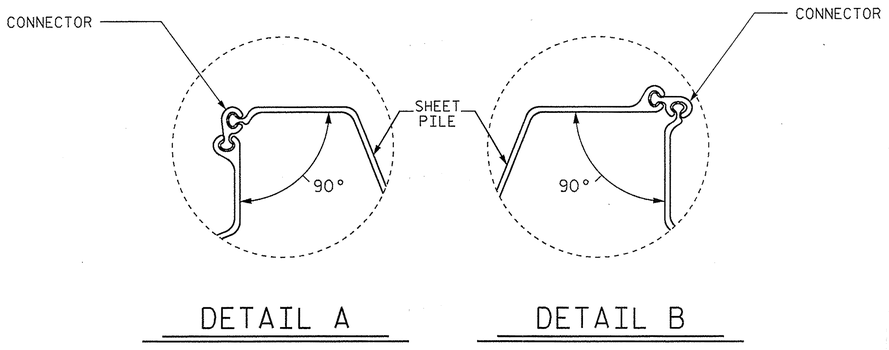


DETAIL A

DETAIL B

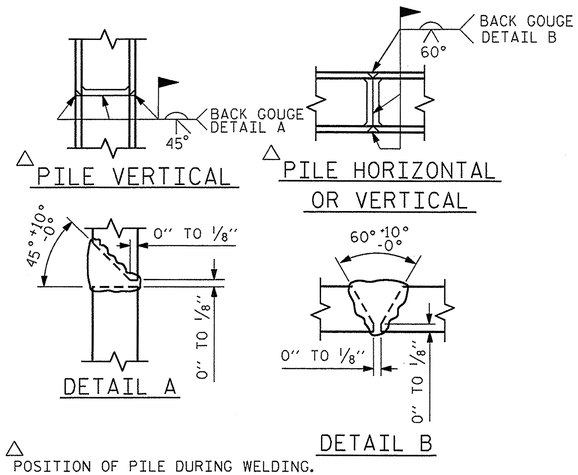


△ POSITION OF PILE DURING WELDING.

# PILE SPLICE DETAILS

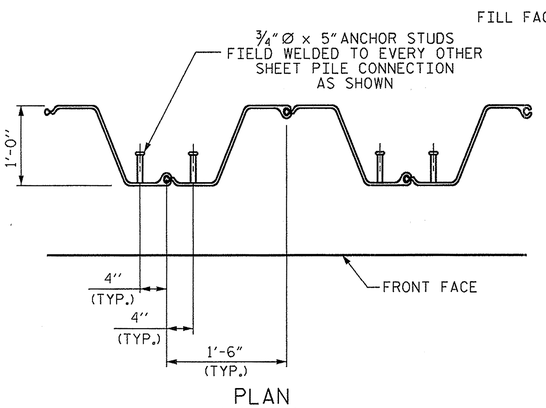


PLAN

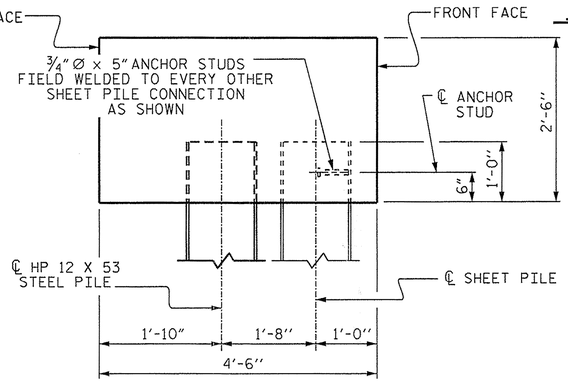


SECTION

| SPLICE CHART | |
|---|---|
| #4 B3 | 2'-5" |
| #9 B1 | 8'-9" |
| #5 B2 | 3'-0" |

## BAR TYPES

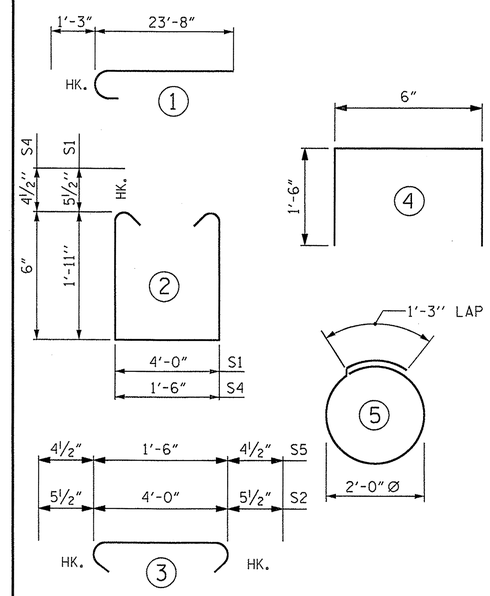


ALL BAR DIMENSIONS ARE OUT TO OUT.

## BILL OF MATERIAL

END BENT 1

| BAR | NO. | SIZE | TYPE | LENGTH | WEIGHT |
|---|---|---|---|---|---|
| ✱B1 | 20 | #9 | 1 | 24'-11" | 1694 |
| ✱B2 | 8 | #5 | STR | 20'-9" | 173 |
| ✱B3 | 8 | #4 | STR | 20'-6" | 110 |
| ✱B4 | 10 | #4 | STR | 4'-0" | 27 |
| ✱B5 | 4 | #4 | STR | 3'-0" | 8 |
| ✱D1 | 22 | #6 | STR | 1'-6" | 50 |
| ✱H1 | 8 | #4 | STR | 4'-6" | 24 |
| ✱H2 | 4 | #6 | STR | 4'-6" | 27 |
| ✱K1 | 12 | #4 | STR | 2'-10" | 23 |
| ✱S1 | 38 | #5 | 2 | 8'-9" | 347 |
| ✱S2 | 38 | #5 | 3 | 4'-11" | 195 |
| ✱S3 | 14 | #4 | 5 | 7'-7" | 71 |
| ✱S4 | 14 | #4 | 2 | 3'-3" | 30 |
| ✱S5 | 14 | #4 | 3 | 2'-3" | 21 |
| ✱U1 | 8 | #4 | 4 | 3'-6" | 19 |
| ✱V1 | 24 | #4 | STR | 4'-8" | 75 |
| ✱EPOXY COATED REINFORCING STEEL | | | | LBS | 2894 |

| | | |
|---|---|---|
| CLASS AA CONCRETE POUR 1 : CAP & COLLARS | C.Y. | 17.1 |
| POUR 2 : (UPPER PART OF WINGS & COPINGS) | C.Y. | 1.3 |
| POUR 3 : (LATERAL GUIDES) | C.Y. | 0.1 |
| TOTAL | C.Y. | 18.5 |

| | | |
|---|---|---|
| HP 12 X 53 STEEL PILES NO. : 7 | LIN. FT. | 315 |
| PILE REDRIVES EA. | | 4 |

| | | | |
|---|---|---|---|
| STEEL SHEET PILES No. = 34 | SQ. FT. | 1524 |
| No. CONNECTOR = 2 | SQ. FT. | 8 |
| TOTAL NO. = 36 | SQ. FT. | 1532 |

# SHEET PILE ANCHOR STUD DETAILS

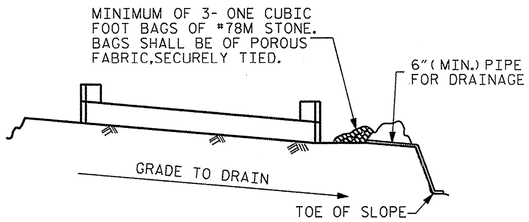


BAGGED STONE AND PIPE SHALL BE PLACED IMMEDIATELY AFTER COMPLETION OF END BENT EXCAVATION. PIPE MAY BE EITHER CONCRETE, CORRUGATED STEEL, CORRUGATED ALUMINUM ALLOY, OR CORRUGATED PLASTIC. PERFORATED PIPE WILL NOT BE ALLOWED.

BAGGED STONE SHALL REMAIN IN PLACE UNTIL THE ENGINEER DIRECTS THAT IT BE REMOVED. THE CONTRACTOR SHALL REMOVE AND DISPOSE OF SILT ACCUMULATIONS AT BAGGED STONE WHEN SO DIRECTED BY THE ENGINEER. BAGS SHALL BE REMOVED AND REPLACED WHENEVER THE ENGINEER DETERMINES THAT THEY HAVE DETERIORATED AND LOST THEIR EFFECTIVENESS.

NO SEPARATE PAYMENT WILL BE MADE FOR THIS WORK AND THE ENTIRE COST OF THIS WORK SHALL BE INCLUDED IN THE UNIT CONTRACT PRICE BID FOR THE SEVERAL PAY ITEMS.

# TEMPORARY DRAINAGE AT END BENT

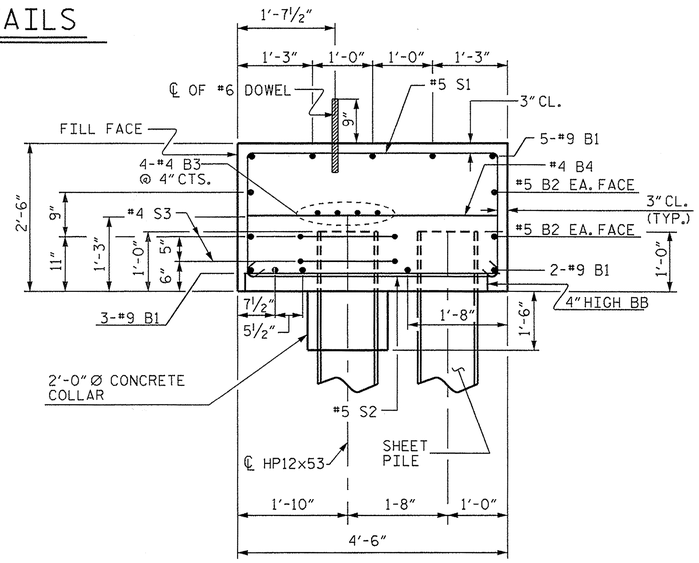


SECTION A-A

DRILL 2" Ø MAX. HOLE IN SHEET PILES FOR #9 B1, #5 B2, AND #5 S2 BARS

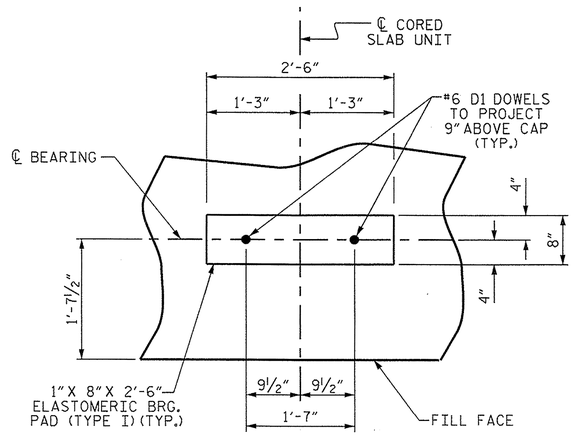


DETAIL C

NORTH CAROLINA PROFESSIONAL SEAL 21271 ENGINEER GREGORY W. DICKEY
6-6-14

PROJECT NO. 17BP.3.R.32

BRUNSWICK COUNTY

STATION: 14+22.50 -L-

SHEET 3 OF 3

STATE OF NORTH CAROLINA
DEPARTMENT OF TRANSPORTATION
RALEIGH

SUBSTRUCTURE
END BENT 1

| REVISIONS | | | | | | SHEET NO. |
|---|---|---|---|---|---|---|
| NO. | BY: | DATE: | NO. | BY: | DATE: | S-10 |
| 1 | | | 3 | | | TOTAL SHEETS |
| 2 | | | 4 | | | - |

| | | | |
|---|---|---|---|
| DRAWN BY : | P.N.HOLDER | DATE : | 4/14 |
| CHECKED BY : | G.W.DICKEY | DATE : | 6/14 |
| DESIGN ENGINEER OF RECORD : | P.N.HOLDER | DATE : | 4/14 |

06-JUN-2014 12:02
S:\DPGI\Division3\17BP3R32\pnholder\Plans\17BP3R32_SD_CS_Str53.dgn

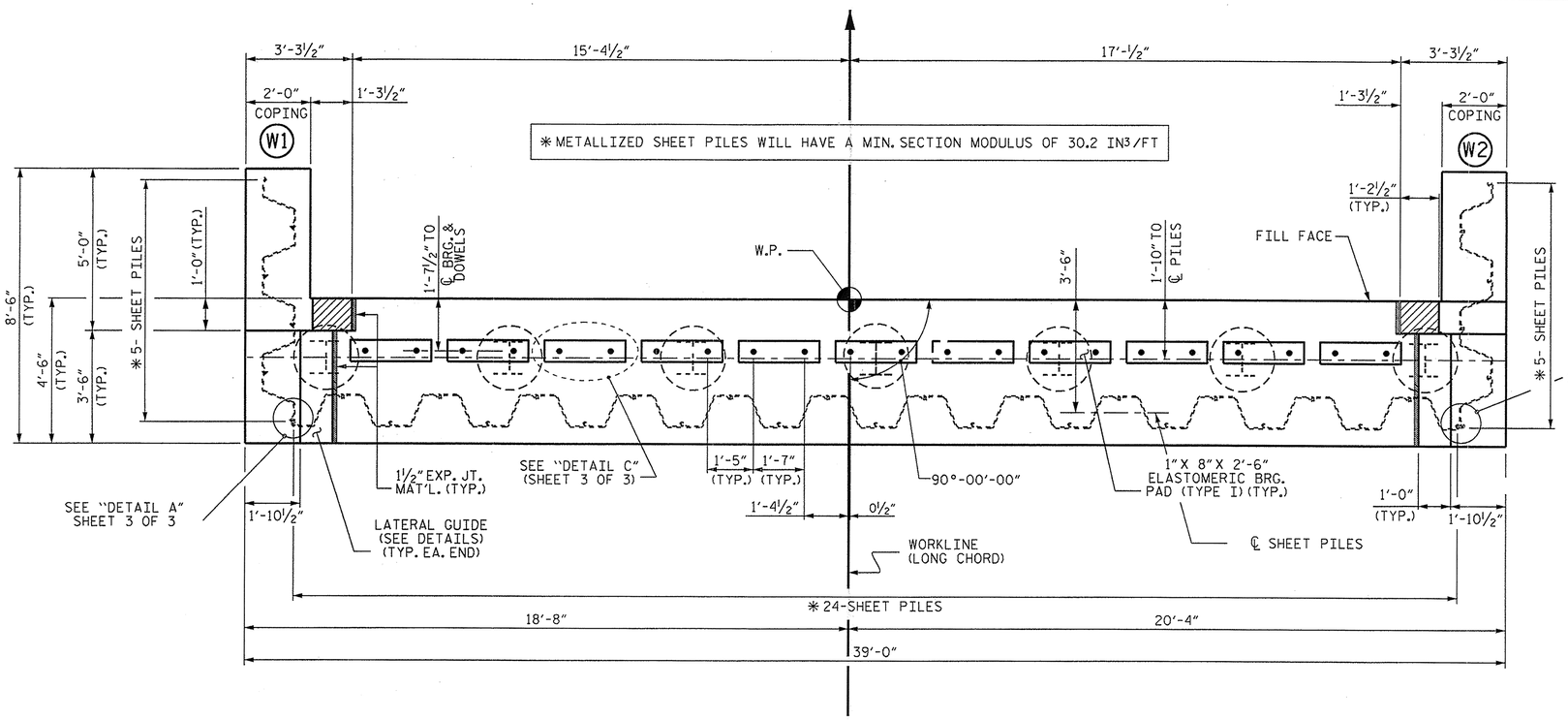


## PLAN

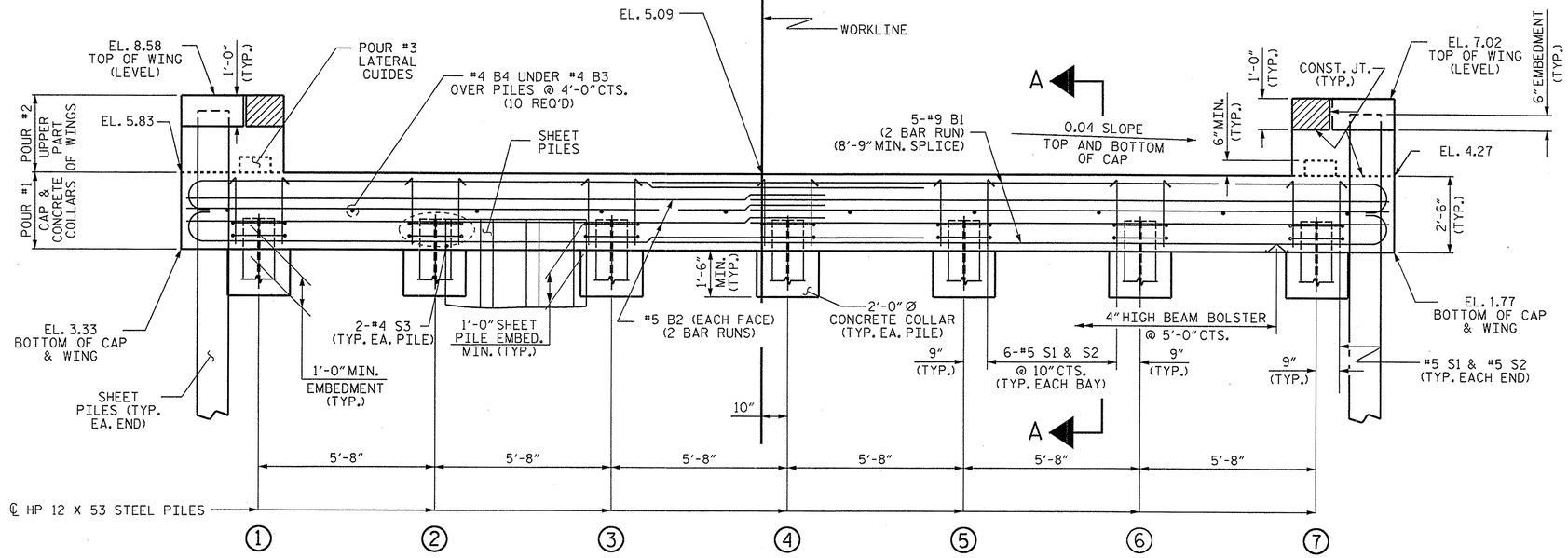


## ELEVATION

NOT ALL SHEET PILING SHOWN FOR CLARITY.
FOR SECTION A-A, SEE SHEET 3 OF 3.

## NOTES

STIRRUPS IN CAP MAY BE SHIFTED AS NECESSARY TO CLEAR DOWELS.

THE LATERAL GUIDES ARE NOT TO BE POURED UNTIL AFTER THE CORED SLAB UNITS ARE IN PLACE.

THE CONCRETE IN THE SHADED AREA OF THE WING SHALL BE POURED AFTER THE VERTICAL CONCRETE BARRIER RAIL IS CAST IF SLIP FORMING IS USED.

THE CONTRACTOR HAS THE OPTION TO OMIT THE LATERAL GUIDE IF APPROVED BY THE ENGINEER.

INSTALL THE 4"Ø DRAIN PIPE THROUGH THE SHEET PILES AS REQUIRED FOR REINFORCED BRIDGE APPROACH FILLS, SEE THE ROADWAY PLANS.

FOR PILE SPLICE DETAILS, SEE SHEET 3 OF 3.

ALL 2"Ø MAX. HOLES IN STEEL SHEET PILING TO BE DRILLED AND NOT BURNED.

SHEET PILES ARE TO BE METALLIZED.

THE CONCRETE IN THE END BENT CAP SHALL CONTAIN SILICA FUME. SILICA FUME SHALL BE SUBSTITUTED FOR 5% OF THE PORTLAND CEMENT BY WEIGHT. IF THE OPTION OF ARTICLE 1024-1 OF THE STANDARD SPECIFICATIONS TO PARTIALLY SUBSTITUTE CLASS F FLY ASH FOR PORTLAND CEMENT IS EXERCISED, THEN THE RATE OF FLY ASH SUBSTITUTION SHALL BE REDUCED TO 1.0 LB OF FLY ASH PER 1.0 LB OF CEMENT. NO PAYMENT WILL BE MADE FOR THIS SUBSTITUTION AS IT IS CONSIDERED INCIDENTAL TO THE VARIOUS PAY ITEMS.

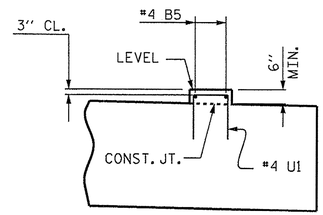


ELEVATION

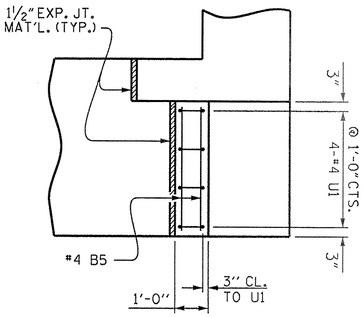


PLAN

## LATERAL GUIDE

(RIGHT SIDE SHOWN, LEFT SIDE SIMILAR)

| TOP OF PILE ELEVATIONS | |
|---|---|
| ① | 4.25 |
| ② | 4.02 |
| ③ | 3.80 |
| ④ | 3.57 |
| ⑤ | 3.34 |
| ⑥ | 3.12 |
| ⑦ | 2.89 |

NORTH CAROLINA PROFESSIONAL SEAL 21271 ENGINEER GREGORY W. DICKEY
6-6-14

PROJECT NO. 17BP.3.R.32
BRUNSWICK COUNTY
STATION: 14+22.50 -L-

SHEET 1 OF 3

STATE OF NORTH CAROLINA
DEPARTMENT OF TRANSPORTATION
RALEIGH

SUBSTRUCTURE

END BENT No. 2

| REVISIONS | | | | | | SHEET NO. |
|---|---|---|---|---|---|---|
| NO. | BY: | DATE: | NO. | BY: | DATE: | S-11 |
| 1 | | | 3 | | | TOTAL SHEETS |
| 2 | | | 4 | | | - |

DRAWN BY : P.N.HOLDER DATE : 04/14
CHECKED BY : G.W.DICKEY DATE : 6/14
DESIGN ENGINEER OF RECORD : P.N.HOLDER DATE : 04/14

09-JUN-2014 12:18
S:\PROJ\Division3\17BP3R32\pnholder\Plans\17BP3R32_SD_CS_Str53.dgn

STP NO. EB-33 006

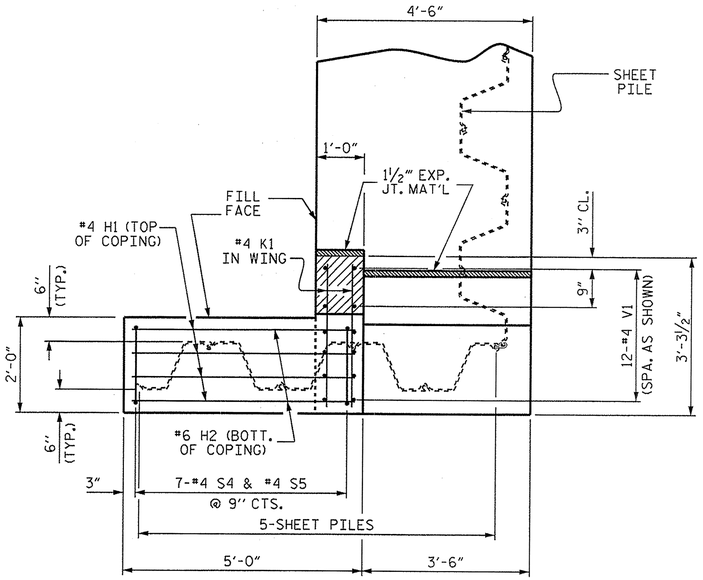


## PLAN - COPING (W1)

DRILL 2" Ø MAX. HOLE IN SHEET PILES FOR #9 B1, #5 B2, #4 K1, AND #4 S5 BARS

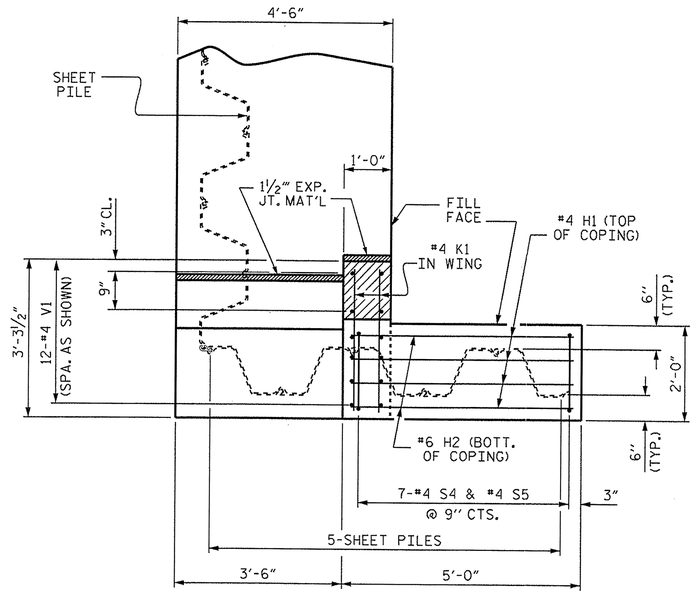


## PLAN - COPING (W2)

DRILL 2" Ø MAX. HOLE IN SHEET PILES FOR #9 B1, #5 B2, #4 K1, AND #4 S5 BARS

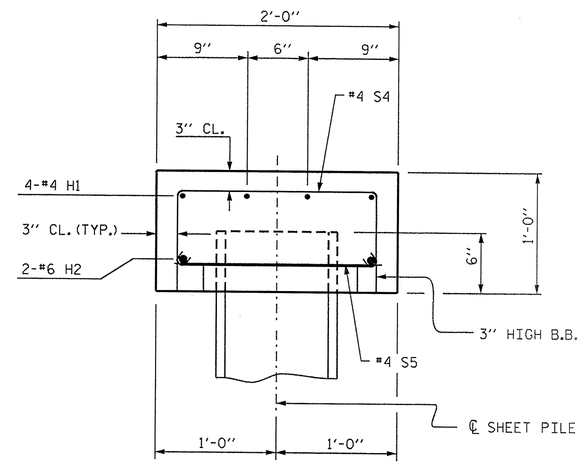


## SECTION THRU COPING

DRILL 2" Ø MAX HOLE IN SHEET PILES FOR #4 S5 BAR

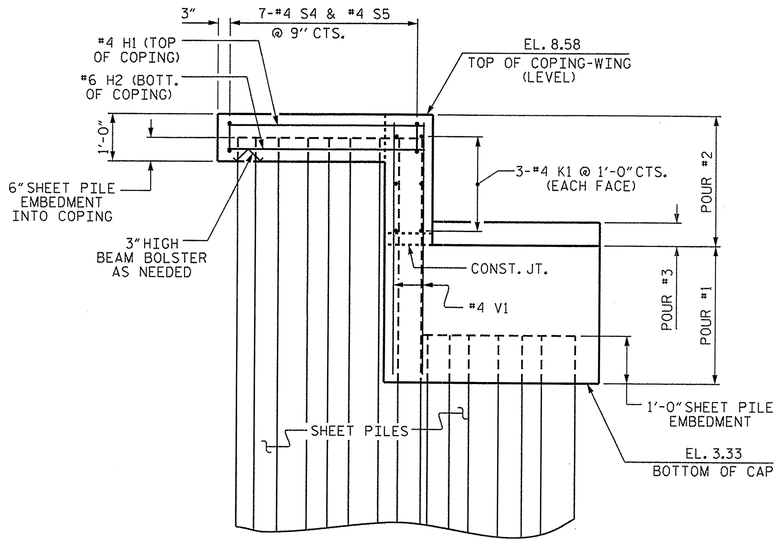


## ELEVATION - COPING (W1)

DRILL 2" Ø MAX. HOLE IN SHEET PILES FOR #9 B1, #5 B2, #4 K1, AND #4 S5 BARS
"V" BARS MAY BE SHIFTED SLIGHTLY TO AVOID SHEET PILES

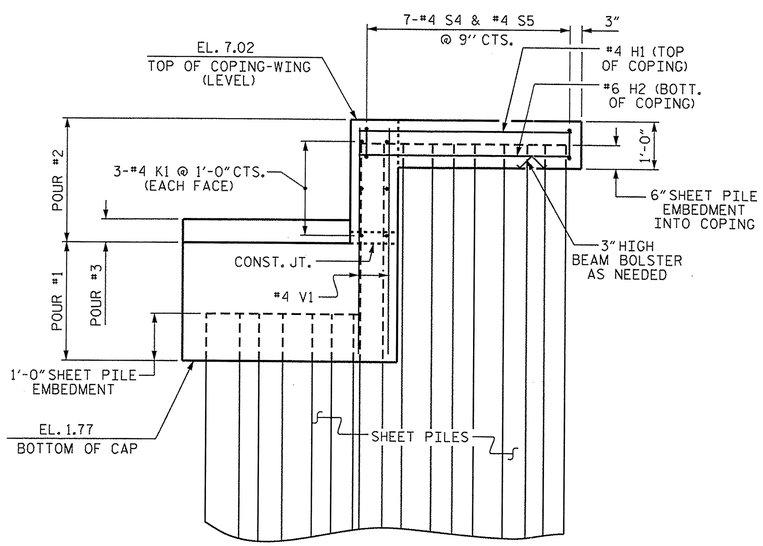


## ELEVATION - COPING (W2)

DRILL 2" Ø MAX. HOLE IN SHEET PILES FOR #9 B1, #5 B2, #4 K1, AND #4 S5 BARS
"V" BARS MAY BE SHIFTED SLIGHTLY TO AVOID SHEET PILES

PROJECT NO. 17BP.3.R.32
BRUNSWICK COUNTY
STATION: 14+22.50 -L-

SHEET 2 OF 3

STATE OF NORTH CAROLINA
DEPARTMENT OF TRANSPORTATION
RALEIGH

SUBSTRUCTURE
END BENT 2

NORTH CAROLINA PROFESSIONAL SEAL 21271 ENGINEER GREGORY W. DICKEY
6-6-14

| REVISIONS | | | | | | SHEET NO. |
|---|---|---|---|---|---|---|
| NO. | BY: | DATE: | NO. | BY: | DATE: | S-12 |
| 1 | | | 3 | | | TOTAL SHEETS |
| 2 | | | 4 | | | - |

DRAWN BY : P.N.HOLDER DATE : 04/14
CHECKED BY : G.W.DICKEY DATE : 6/14
DESIGN ENGINEER OF RECORD : P.N.HOLDER DATE : 04/14

06-JUN-2014 12:02
S:\PRD\Divisions\17BP3R32\pnholder\Plans\17BP3R32_SD_CS_Str53.dgn

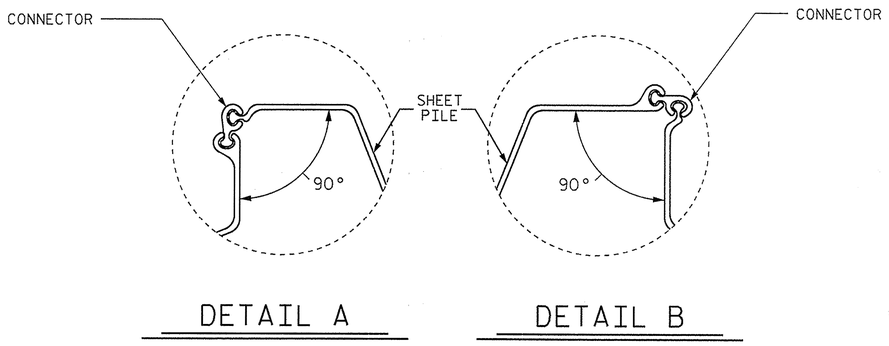


DETAIL A

DETAIL B

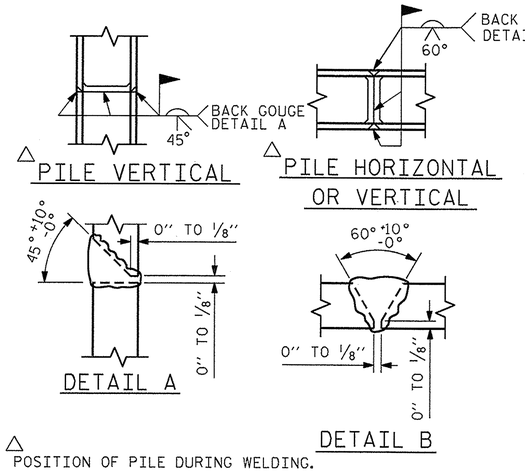


△ POSITION OF PILE DURING WELDING.

# PILE SPLICE DETAILS

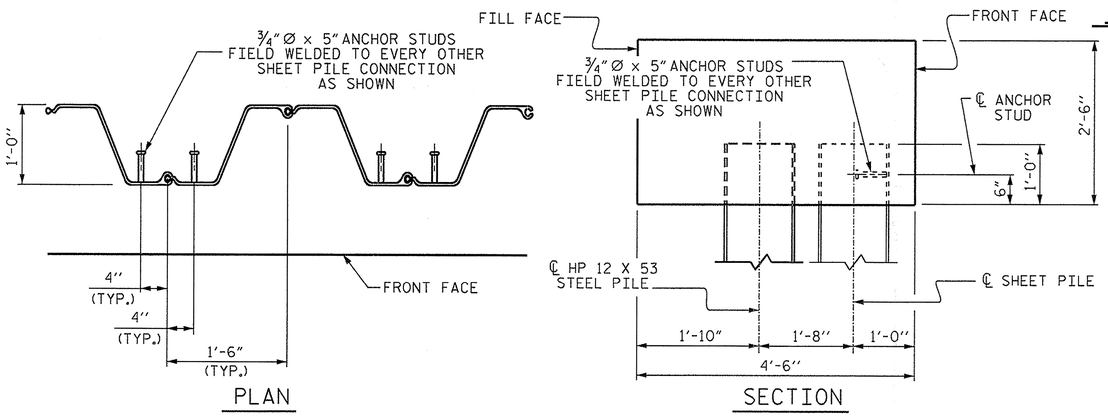


| SPLICE CHART | |
|---|---|
| #4 B3 | 2'-5" |
| #9 B1 | 8'-9" |
| #5 B2 | 3'-0" |

## BAR TYPES

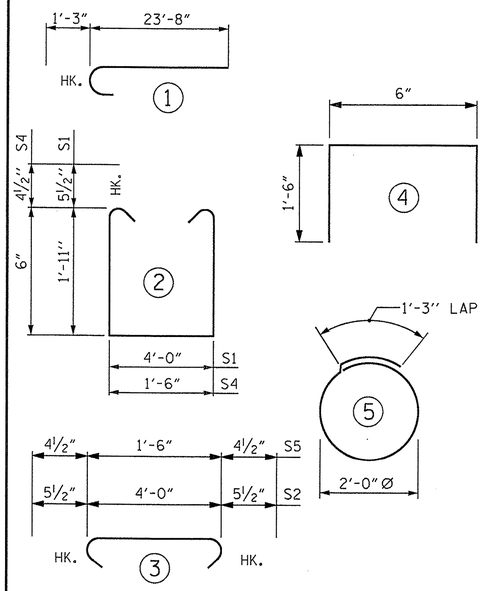


ALL BAR DIMENSIONS ARE OUT TO OUT.

## BILL OF MATERIAL

### END BENT 1

| BAR | NO. | SIZE | TYPE | LENGTH | WEIGHT |
|---|---|---|---|---|---|
| ✱B1 | 20 | #9 | 1 | 24'-11" | 1694 |
| ✱B2 | 8 | #5 | STR | 20'-9" | 173 |
| ✱B3 | 8 | #4 | STR | 20'-6" | 110 |
| ✱B4 | 10 | #4 | STR | 4'-0" | 27 |
| ✱B5 | 4 | #4 | STR | 3'-0" | 8 |
| ✱D1 | 22 | #6 | STR | 1'-6" | 50 |
| ✱H1 | 8 | #4 | STR | 4'-6" | 24 |
| ✱H2 | 4 | #6 | STR | 4'-6" | 27 |
| ✱K1 | 12 | #4 | STR | 2'-10" | 23 |
| ✱S1 | 38 | #5 | 2 | 8'-9" | 347 |
| ✱S2 | 38 | #5 | 3 | 4'-11" | 195 |
| ✱S3 | 14 | #4 | 5 | 7'-7" | 71 |
| ✱S4 | 14 | #4 | 2 | 3'-3" | 30 |
| ✱S5 | 14 | #4 | 3 | 2'-3" | 21 |
| ✱U1 | 8 | #4 | 4 | 3'-6" | 19 |
| ✱V1 | 24 | #4 | STR | 4'-8" | 75 |

✱EPOXY COATED REINFORCING STEEL LBS 2894

CLASS AA CONCRETE
- POUR 1 : CAP & COLLARS C.Y. 17.1
- POUR 2 : (UPPER PART OF WINGS & COPINGS) C.Y. 1.3
- POUR 3 : (LATERAL GUIDES) C.Y. 0.1
- TOTAL C.Y. 18.5

HP 12 X 53 STEEL PILES
- NO. : 7 315 LIN. FT.
- PILE REDRIVES EA. 4

STEEL SHEET PILES
- No. = 34 SQ. FT. 1524
- No. CONNECTOR = 2 SQ. FT. 8
- TOTAL NO. = 36 SQ. FT. 1532

# SHEET PILE ANCHOR STUD DETAILS

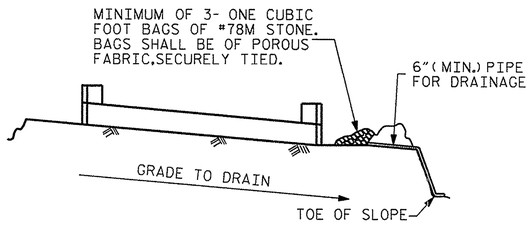


BAGGED STONE AND PIPE SHALL BE PLACED IMMEDIATELY AFTER COMPLETION OF END BENT EXCAVATION. PIPE MAY BE EITHER CONCRETE, CORRUGATED STEEL, CORRUGATED ALUMINUM ALLOY, OR CORRUGATED PLASTIC. PERFORATED PIPE WILL NOT BE ALLOWED.

BAGGED STONE SHALL REMAIN IN PLACE UNTIL THE ENGINEER DIRECTS THAT IT BE REMOVED. THE CONTRACTOR SHALL REMOVE AND DISPOSE OF SILT ACCUMULATIONS AT BAGGED STONE WHEN SO DIRECTED BY THE ENGINEER. BAGS SHALL BE REMOVED AND REPLACED WHENEVER THE ENGINEER DETERMINES THAT THEY HAVE DETERIORATED AND LOST THEIR EFFECTIVENESS.

NO SEPARATE PAYMENT WILL BE MADE FOR THIS WORK AND THE ENTIRE COST OF THIS WORK SHALL BE INCLUDED IN THE UNIT CONTRACT PRICE BID FOR THE SEVERAL PAY ITEMS.

# TEMPORARY DRAINAGE AT END BENT

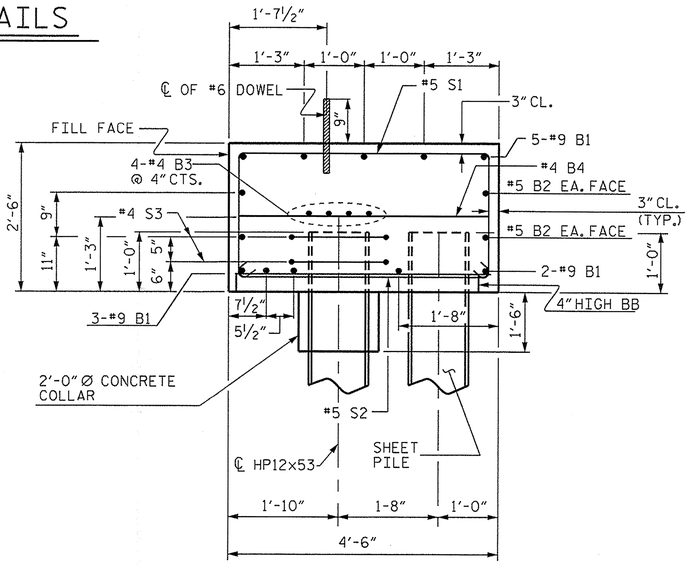


## SECTION A-A

DRILL 2" Ø MAX. HOLE IN SHEET PILES FOR #9 B1, #5 B2, AND #5 S2 BARS

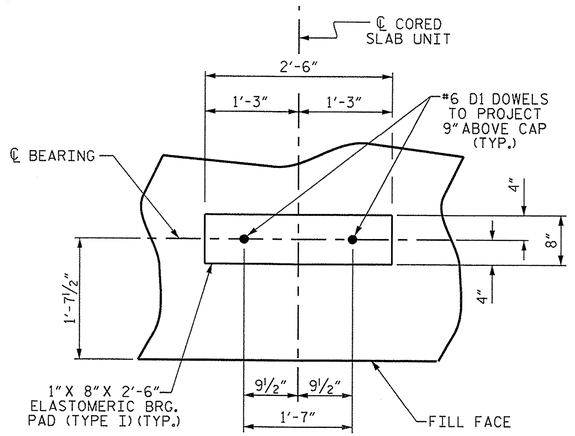


## DETAIL C

NORTH CAROLINA PROFESSIONAL SEAL 21271 ENGINEER GREGORY W. DICKEY
6-6-14

PROJECT NO. 17BP.3.R.32

BRUNSWICK COUNTY

STATION: 14+22.50 -L-

SHEET 3 OF 3

STATE OF NORTH CAROLINA
DEPARTMENT OF TRANSPORTATION
RALEIGH

SUBSTRUCTURE
END BENT 2

| REVISIONS | | | | | | SHEET NO. |
|---|---|---|---|---|---|---|
| NO. | BY: | DATE: | NO. | BY: | DATE: | S-13 |
| 1 | | | 3 | | | TOTAL SHEETS |
| 2 | | | 4 | | | - |

DRAWN BY : P.N.HOLDER DATE : 4/14
CHECKED BY : G.W.DICKEY DATE : 6/14
DESIGN ENGINEER OF RECORD : P.N.HOLDER DATE : 4/14

06-JUN-2014 12:02
S:\DPG1\Division3\17BP3R32\pnholder\Plans\17BP3R32_SD_CS_Str53.dgn

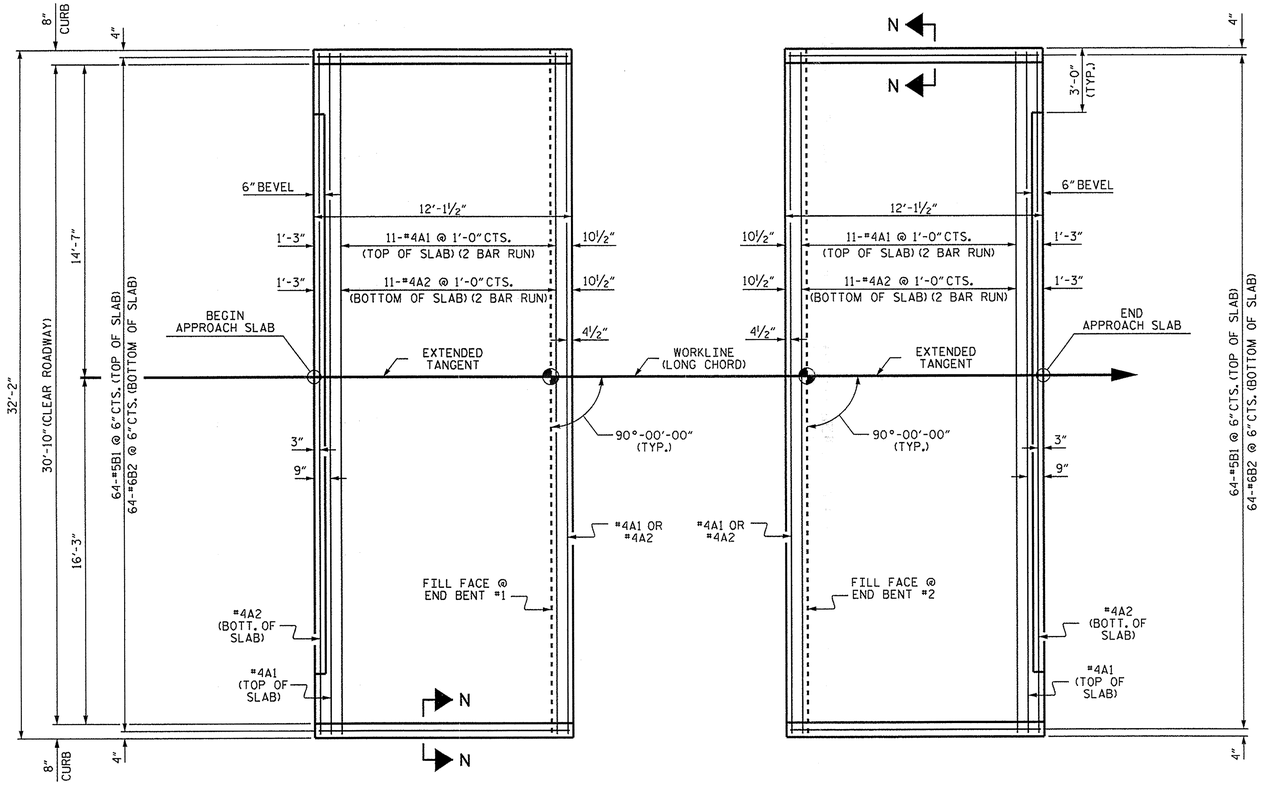


PLAN @ END BENT #1

PLAN @ END BENT #2

DIMENSIONS SHOWN ARE TYPICAL FOR BOTH APPROACH SLABS

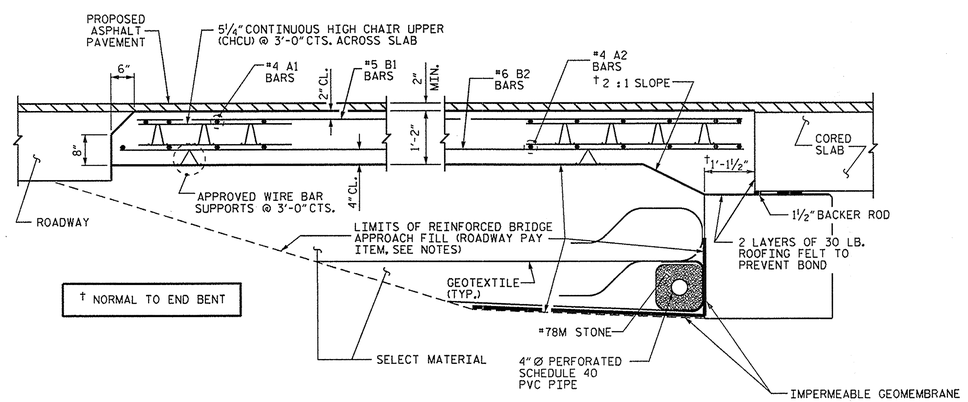


SECTION THRU SLAB

## NOTES

FOR REINFORCED BRIDGE APPROACH FILL INCLUDING GEOTEXTILE, IMPERMEABLE GEOMEMBRANE, 4" Ø DRAINAGE PIPE, #78M STONE, AND SELECT MATERIAL, SEE ROADWAY PLANS.

AREA BETWEEN THE WINGWALL AND APPROACH SLAB SHALL BE GRADED TO DRAIN THE WATER AWAY FROM THE FILL FACE OF THE BRIDGE AND SHALL BE PAVED. SEE ROADWAY PLANS.

APPROACH SLAB GROOVING IS NOT REQUIRED.

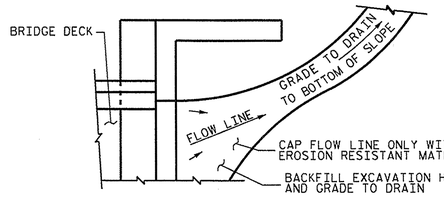


NOTE: IF THE APPROACH SLAB IS NOT CONSTRUCTED IMMEDIATELY AFTER THE BACKFILLING OF THE END BENT EXCAVATION, GRADE TO DRAIN TO THE BOTTOM OF THE SLOPE AND PROVIDE EROSION RESISTANT MATERIAL, SUCH AS FIBERGLASS ROVING OR AS DIRECTED BY THE ENGINEER TO PREVENT SOIL EROSION AND TO PROTECT THE AREA ADJACENT TO THE STRUCTURE. THE CONTRACTOR WILL BE REQUIRED TO REMOVE THESE MATERIALS PRIOR TO CONSTRUCTION OF THE APPROACH SLAB.

## TEMPORARY DRAINAGE DETAIL

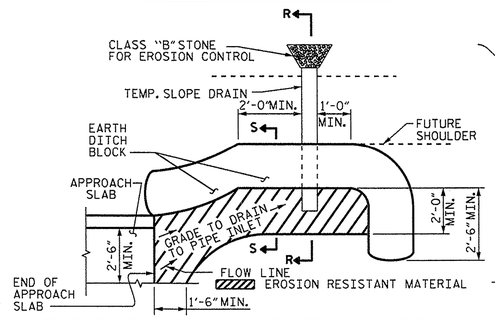


NOTE: IMMEDIATELY AFTER THE CONSTRUCTION OF THE APPROACH SLAB, THE CONTRACTOR SHALL PROVIDE TEMPORARY BERM AND SLOPE DRAIN. CONTRACTOR SHALL GRADE TO PIPE INLET AND PROVIDE EROSION RESISTANT MATERIAL AS SHOWN. THE EROSION RESISTANT MATERIAL SHALL BE EITHER 1) ASPHALT PLANT MIX, TYPE 1 OR TYPE 2, MIN. 2" DEPTH, 2) EROSION CONTROL MAT, OR 3) CONCRETE, AS DIRECTED BY THE ENGINEER. THE SLOPE DRAIN SHALL CONSIST OF A NON-PERFORATED TEMPORARY DRAINAGE PIPE, 12 INCHES IN DIAMETER.

PLAN VIEW

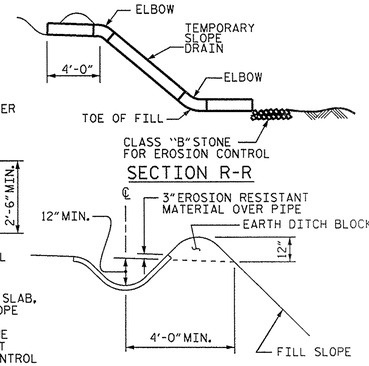


SECTION R-R

SECTION S-S

## TEMPORARY BERM AND SLOPE DRAIN DETAILS

(TO BE USED WHEN SHOULDER BERM GUTTER IS REQUIRED)

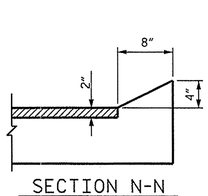


SECTION N-N

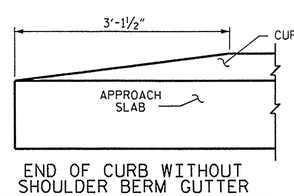


END OF CURB WITHOUT SHOULDER BERM GUTTER

## CURB DETAILS

| SPLICE LENGTHS | | |
|---|---|---|
| BAR SIZE | EPOXY COATED | UNCOATED |
| #4 | 2'-0" | 1'-9" |
| #5 | 2'-6" | 2'-2" |
| #6 | 3'-10" | 2'-7" |

NORTH CAROLINA PROFESSIONAL SEAL 21271 ENGINEER GREGORY W. DICKEY 6-6-14

| BILL OF MATERIAL | | | | | |
|---|---|---|---|---|---|
| APPROACH SLAB AT EB #1 | | | | | |
| BAR | NO. | SIZE | TYPE | LENGTH | WEIGHT |
| * A1 | 26 | #4 | STR | 16'-11" | 294 |
| * A2 | 26 | #4 | STR | 16'-9" | 291 |
| * B1 | 64 | #5 | STR | 11'-2" | 745 |
| * B2 | 64 | #6 | STR | 11'-8" | 1121 |
| * EPOXY COATED REINFORCING STEEL | | | | LBS. | 2451 |
| CLASS AA CONCRETE | | | | C.Y. | 19.9 |
| APPROACH SLAB AT EB #2 | | | | | |
| BAR | NO. | SIZE | TYPE | LENGTH | WEIGHT |
| * A1 | 26 | #4 | STR | 16'-11" | 294 |
| * A2 | 26 | #4 | STR | 16'-9" | 291 |
| * B1 | 64 | #5 | STR | 11'-2" | 745 |
| * B2 | 64 | #6 | STR | 11'-8" | 1121 |
| * EPOXY COATED REINFORCING STEEL | | | | LBS. | 2451 |
| CLASS AA CONCRETE | | | | C.Y. | 19.9 |

PROJECT NO. 17BP.3.R.32

BRUNSWICK COUNTY

STATION: 14+22.50 -L-

STATE OF NORTH CAROLINA
DEPARTMENT OF TRANSPORTATION
RALEIGH

# STANDARD BRIDGE APPROACH SLAB FOR PRESTRESSED CONCRETE CORED SLAB UNIT 90° SKEW

| REVISIONS | | | | | | SHEET NO. |
|---|---|---|---|---|---|---|
| NO. | BY: | DATE: | NO. | BY: | DATE: | S-14 |
| 1 | | | 3 | | | TOTAL SHEETS |
| 2 | | | 4 | | | - |

| | | | |
|---|---|---|---|
| ASSEMBLED BY : | P.N.HOLDER | DATE : | 04/14 |
| CHECKED BY : | G.W.DICKEY | DATE : | 4/30/14 |
| DRAWN BY : | SHS/MAA 5-09 | REV. 12-11 | MAA/AAC |
| CHECKED BY : | BCH 5-09 | | |

06-JUN-2014 12:02
S:\DPG1\Division3\17BP3R32\pholder\Plans\17BP3R32_SD_CS_Str53.dgn

STD NO. BAS 33 90S

# STANDARD NOTES

## DESIGN DATA:

| | |
|---|---|
| SPECIFICATIONS | A.A.S.H.T.O. (CURRENT) |
| LIVE LOAD | SEE PLANS |
| IMPACT ALLOWANCE | SEE A.A.S.H.T.O. |
| STRESS IN EXTREME FIBER OF | |
| STRUCTURAL STEEL - AASHTO M270 GRADE 36 | 20,000 LBS. PER SQ. IN. |
| - AASHTO M270 GRADE 50W | 27,000 LBS. PER SQ. IN. |
| - AASHTO M270 GRADE 50 | 27,000 LBS. PER SQ. IN. |
| REINFORCING STEEL IN TENSION | |
| GRADE 60 | 24,000 LBS. PER SQ. IN. |
| CONCRETE IN COMPRESSION | 1,200 LBS. PER SQ. IN. |
| CONCRETE IN SHEAR | SEE A.A.S.H.T.O. |
| STRUCTURAL TIMBER - TREATED OR | |
| UNTREATED - EXTREME FIBER STRESS | 1,800 LBS. PER SQ. IN. |
| COMPRESSION PERPENDICULAR TO GRAIN OF TIMBER | 375 LBS. PER SQ. IN. |
| EQUIVALENT FLUID PRESSURE OF EARTH | 30 LBS. PER CU. FT. (MINIMUM) |

## MATERIAL AND WORKMANSHIP:

EXCEPT AS MAY OTHERWISE BE SPECIFIED ON PLANS OR IN THE SPECIAL PROVISIONS, ALL MATERIAL AND WORKMANSHIP SHALL BE IN ACCORDANCE WITH THE 2012 "STANDARD SPECIFICATIONS FOR ROADS AND STRUCTURES" OF THE N. C. DEPARTMENT OF TRANSPORTATION.

STEEL SHEET PILING FOR PERMANENT OR TEMPORARY APPLICATIONS SHALL BE HOT ROLLED.

## CONCRETE:

UNLESS OTHERWISE REQUIRED ON PLANS, CLASS A CONCRETE SHALL BE USED FOR ALL PORTIONS OF ALL STRUCTURES WITH THE EXCEPTION THAT: CLASS AA CONCRETE SHALL BE USED IN BRIDGE SUPERSTRUCTURES, ABUTMENT BACKWALLS, AND APPROACH SLABS; AND CLASS B CONCRETE SHALL BE USED FOR SLOPE PROTECTION AND RIP RAP.

## CONCRETE CHAMFERS:

UNLESS OTHERWISE NOTED ON THE PLANS, ALL EXPOSED CORNERS ON STRUCTURES SHALL BE CHAMFERED 3/4" WITH THE FOLLOWING EXCEPTIONS: TOP CORNERS OF CURBS MAY BE ROUNDED TO 1-1/2" RADIUS WHICH IS BUILT INTO CURB FORMS; CORNERS OF TRANSVERSE FLOOR EXPANSION JOINTS SHALL BE ROUNDED WITH A 1/4" FINISHING TOOL UNLESS OTHERWISE REQUIRED ON PLANS; AND CORNERS OF EXPANSION JOINTS IN THE ROADWAY FACES AND TOPS OF CURBS AND SIDEWALKS SHALL BE ROUNDED TO A 1/4" RADIUS WITH A FINISHING STONE OR TOOL UNLESS OTHERWISE REQUIRED ON PLANS.

## DOWELS:

DOWELS WHEN INDICATED ON PLANS AS FOR CULVERT EXTENSIONS, SHALL BE EMBEDDED AT LEAST 12" INTO THE OLD CONCRETE AND GROUTED INTO PLACE WITH 1:2 CEMENT MORTAR.

## ALLOWANCE FOR DEAD LOAD DEFLECTION, SETTLEMENT, ETC. IN CASTING SUPERSTRUCTURES:

BRIDGES SHALL BE BUILT ON THE GRADE OR VERTICAL CURVE SHOWN ON PLANS. SLABS, CURBS AND PARAPETS SHALL CONFORM TO THE GRADE OR CURVE.

ALL DIMENSIONS WHICH ARE GIVEN IN SECTION AND ARE AFFECTED BY DEAD LOAD DEFLECTIONS ARE DIMENSIONS AT CENTER LINE OF BEARING UNLESS OTHERWISE NOTED ON PLANS. IN SETTING FORMS FOR STEEL BEAM BRIDGES AND PRESTRESSED CONCRETE GIRDER BRIDGES, ADJUSTMENTS SHALL BE MADE DUE TO THE DEAD LOAD DEFLECTIONS FOR THE ELEVATIONS SHOWN. WHERE BLOCKS ARE SHOWN OVER BEAMS FOR BUILDING UP TO THE SLAB, THE VERTICAL DIMENSIONS OF THE BLOCKS SHALL BE ADJUSTED BETWEEN BEARINGS TO COMPENSATE FOR DEAD LOAD DEFLECTIONS, VERTICAL CURVE ORDINATE, AND ACTUAL BEAM CAMBER. WHERE BOTTOM OF SLAB IS IN LINE WITH BOTTOM OF TOP FLANGES, DEPTH OF SLAB BETWEEN BEARINGS SHALL BE ADJUSTED TO COMPENSATE FOR DEAD LOAD DEFLECTION, VERTICAL CURVE ORDINATE, AND ACTUAL BEAM CAMBER.

IN SETTING FALSEWORK AND FORMS FOR REINFORCED CONCRETE SPANS, AN ALLOWANCE SHALL BE MADE FOR DEAD LOAD DEFLECTIONS, SETTLEMENT OF FALSEWORK, AND PERMANENT CAMBER WHICH SHALL BE PROVIDED FOR IN ADDITION TO THE ELEVATIONS SHOWN. AFTER REMOVAL OF THE FALSEWORK, THE FINISHED STRUCTURES SHALL CONFORM TO THE PROFILE AND ELEVATIONS SHOWN ON THE PLANS AND CONSTRUCTION ELEVATIONS FURNISHED BY THE ENGINEER.

DETAILED DRAWINGS FOR FALSEWORK OR FORMS FOR BRIDGE SUPERSTRUCTURE AND ANY STRUCTURE OR PARTS OF A STRUCTURE AS NOTED ON THE PLANS SHALL BE SUBMITTED TO THE ENGINEER FOR APPROVAL BEFORE CONSTRUCTION OF THE FALSEWORK OR FORMS IS STARTED.

## REINFORCING STEEL:

ALL REINFORCING STEEL SHALL BE DEFORMED. DIMENSIONS RELATIVE TO PLACEMENT OF REINFORCING ARE TO CENTERS OF BARS UNLESS OTHERWISE INDICATED IN THE PLANS. DIMENSIONS ON BAR DETAILS ARE TO CENTERS OF BARS OR ARE OUT TO OUT AS INDICATED ON PLANS.

WIRE BAR SUPPORTS SHALL BE PROVIDED FOR REINFORCING STEEL WHERE INDICATED ON THE PLANS. WHEN BAR SUPPORT PIECES ARE PLACED IN CONTINUOUS LINES, THEY SHALL BE SO PLACED THAT THE ENDS OF THE SUPPORTING WIRES SHALL BE LAPPED TO LOCK LEGS ON ADJOINING PIECES.

## STRUCTURAL STEEL:

AT THE CONTRACTOR'S OPTION, HE MAY SUBSTITUTE 7/8" Ø SHEAR STUDS FOR THE 3/4" Ø STUDS SPECIFIED ON THE PLANS. THIS SUBSTITUTION SHALL BE MADE AT THE RATE OF 3 - 7/8" Ø STUDS FOR 4 - 3/4" Ø STUDS, AND STUD SPACING CHANGES SHALL BE MADE AS NECESSARY TO PROVIDE THE SAME EQUIVALENT NUMBER OF 7/8" Ø STUDS ALONG THE BEAM AS SHOWN FOR 3/4" Ø STUDS BASED ON THE RATIO OF 3 - 7/8" Ø STUDS FOR 4 - 3/4" Ø STUDS. STUDS OF THE LENGTH SPECIFIED ON THE PLANS MUST BE PROVIDED. THE MAXIMUM SPACING SHALL BE 2'-0".

EXCEPT AT THE INTERIOR SUPPORTS OF CONTINUOUS BEAMS WHERE THE COVER PLATE IS IN CONTACT WITH BEARING PLATE, THE CONTRACTOR MAY, AT HIS OPTION, SUBSTITUTE FOR THE COVER PLATES DESIGNATED ON THE PLANS COVER PLATES OF THE EQUIVALENT AREA PROVIDED THESE PLATES ARE AT LEAST 5/16" IN THICKNESS AND DO NOT EXCEED A WIDTH EQUAL TO THE FLANGE WIDTH LESS 2" OR A THICKNESS EQUAL TO 2 TIMES THE FLANGE THICKNESS. THE SIZE OF FILLET WELDS SHALL CONFORM TO THE REQUIREMENTS OF THE CURRENT ANSI/AASHTO/AWS "BRIDGE WELDING CODE". ELECTROSLAG WELDING WILL NOT BE PERMITTED.

WITH THE SOLE EXCEPTION OF EDGES AT SURFACES WHICH BEAR ON OTHER SURFACES, ALL SHARP EDGES AND ENDS OF SHAPES AND PLATES SHALL BE SLIGHTLY ROUNDED BY SUITABLE MEANS TO A RADIUS OF APPROXIMATELY 1/16 INCH OR EQUIVALENT FLAT SURFACE AT A SUITABLE ANGLE PRIOR TO PAINTING, GALVANIZING, OR METALLIZING.

## HANDRAILS AND POSTS:

METAL STANDARDS AND FACES OF THE CONCRETE END POSTS FOR THE METAL RAIL SHALL BE SET NORMAL TO THE GRADE OF THE CURB, UNLESS OTHERWISE SHOWN ON PLANS. THE METAL RAIL AND TOPS OF CONCRETE POSTS USED WITH THE ALUMINUM RAIL SHALL BE BUILT PARALLEL TO THE GRADE OF THE CURB.

METAL HANDRAILS SHALL BE IN ACCORDANCE WITH THE PLANS. RAILS SHALL BE AS MANUFACTURED FOR BRIDGE RAILING. CASTINGS SHALL BE OF A UNIFORM APPEARANCE. FINS AND OTHER DEFORMATIONS RESULTING FROM CASTING OR OTHERWISE SHALL BE REMOVED IN A MANNER SO THAT A UNIFORM COLORING OF THE COMPLETED CASTING SHALL BE OBTAINED. CASTINGS WITH DISCOLORATIONS OR OF NON-UNIFORM COLORING WILL NOT BE ACCEPTED. CERTIFIED MILL REPORTS ARE REQUIRED FOR METAL RAILS AND POSTS.

## SPECIAL NOTES:

GENERALLY, IN CASE OF DISCREPANCY, THIS STANDARD SHEET OF NOTES SHALL GOVERN OVER THE SPECIFICATIONS, BUT THE REMAINDER OF THE PLANS SHALL GOVERN OVER NOTES HEREON, AND SPECIAL PROVISIONS SHALL GOVERN OVER ALL. SEE SPECIFICATIONS ARTICLE 105-4.

ENGLISH

JANUARY, 1990

REV. 6-16-95 EEM @ RGW REV. 5-7-03 RWW @ JTE REV. 10-1-11 MAA @ GM
06-JUN-2014 12:02
S:\DPG1\Divisions\17BP3R32\pphoides\Plans\17BP3R32_SD_GS_Str53.dgn

STD. NO. SN

| STATE | STATE PROJECT REFERENCE NO. | SHEET NO. | TOTAL SHEETS |
|---|---|---|---|
| N.C. | SF-090053 | 1 | 5 |

# STATE OF NORTH CAROLINA
## DEPARTMENT OF TRANSPORTATION
## DIVISION OF HIGHWAYS
## GEOTECHNICAL ENGINEERING UNIT

# STRUCTURE SUBSURFACE INVESTIGATION

PROJ. REFERENCE NO. *17BP.3.R.32 (SF-090053)* F.A. PROJ. _____

COUNTY *BRUNSWICK*

PROJECT DESCRIPTION *BRIDGE NO. 53 ON SR 1134 (GRAY BRIDGE RD.) OVER SHARRON CREEK AT -L- STA. 14+22.50*

ID: SF-090053

PROJECT: 17BP.3.R.32

## CONTENTS


| SHEET | DESCRIPTION |
|---|---|
| 1 | TITLE SHEET |
| 2 | LEGEND |
| 3 | SITE PLAN |
| 4 | PROFILE |
| 5 | BORE LOGS |


## CAUTION NOTICE

THE SUBSURFACE INFORMATION AND THE SUBSURFACE INVESTIGATION ON WHICH IT IS BASED WERE MADE FOR THE PURPOSE OF STUDY, PLANNING, AND DESIGN AND NOT FOR CONSTRUCTION OR PAY PURPOSES. THE VARIOUS FIELD BORING LOGS, ROCK CORES, AND SOIL TEST DATA AVAILABLE MAY BE REVIEWED OR INSPECTED IN RALEIGH BY CONTACTING THE N.C. DEPARTMENT OF TRANSPORTATION, GEOTECHNICAL ENGINEERING UNIT AT (919) 707-6850. NEITHER THE SUBSURFACE PLANS AND REPORTS, NOR THE FIELD BORING LOGS, ROCK CORES, OR SOIL TEST DATA ARE PART OF THE CONTRACT.

GENERAL SOIL AND ROCK STRATA DESCRIPTIONS AND INDICATED BOUNDARIES ARE BASED ON A GEOTECHNICAL INTERPRETATION OF ALL AVAILABLE SUBSURFACE DATA AND MAY NOT NECESSARILY REFLECT THE ACTUAL SUBSURFACE CONDITIONS BETWEEN BORINGS OR BETWEEN SAMPLED STRATA WITHIN THE BOREHOLE. THE LABORATORY SAMPLE DATA AND THE IN SITU (IN-PLACE) TEST DATA CAN BE RELIED ON ONLY TO THE DEGREE OF RELIABILITY INHERENT IN THE STANDARD TEST METHOD. THE OBSERVED WATER LEVELS OR SOIL MOISTURE CONDITIONS INDICATED IN THE SUBSURFACE INVESTIGATIONS ARE AS RECORDED AT THE TIME OF THE INVESTIGATION. THESE WATER LEVELS OR SOIL MOISTURE CONDITIONS MAY VARY CONSIDERABLY WITH TIME ACCORDING TO CLIMATIC CONDITIONS INCLUDING TEMPERATURES, PRECIPITATION, AND WIND, AS WELL AS OTHER NON-CLIMATIC FACTORS.

THE BIDDER OR CONTRACTOR IS CAUTIONED THAT DETAILS SHOWN ON THE SUBSURFACE PLANS ARE PRELIMINARY ONLY AND IN MANY CASES THE FINAL DESIGN DETAILS ARE DIFFERENT. FOR BIDDING AND CONSTRUCTION PURPOSES, REFER TO THE CONSTRUCTION PLANS AND DOCUMENTS FOR FINAL DESIGN INFORMATION ON THIS PROJECT. THE DEPARTMENT DOES NOT WARRANT OR GUARANTEE THE SUFFICIENCY OR ACCURACY OF THE INVESTIGATION MADE, NOR THE INTERPRETATIONS MADE, OR OPINION OF THE DEPARTMENT AS TO THE TYPE OF MATERIALS AND CONDITIONS TO BE ENCOUNTERED. THE BIDDER OR CONTRACTOR IS CAUTIONED TO MAKE SUCH INDEPENDENT SUBSURFACE INVESTIGATIONS AS HE DEEMS NECESSARY TO SATISFY HIMSELF AS TO CONDITIONS TO BE ENCOUNTERED ON THIS PROJECT. THE CONTRACTOR SHALL HAVE NO CLAIM FOR ADDITIONAL COMPENSATION OR FOR AN EXTENSION OF TIME FOR ANY REASON RESULTING FROM THE ACTUAL CONDITIONS ENCOUNTERED AT THE SITE DIFFERING FROM THOSE INDICATED IN THE SUBSURFACE INFORMATION.

PERSONNEL

*J.D. GEMPERLINE*

*SUMMIT PERSONNEL*

INVESTIGATED BY *T.C. BOTTOMS*

CHECKED BY *D.N. ARGENBRIGHT*

SUBMITTED BY *D.N. ARGENBRIGHT*

DATE *MAY 2014*

DRAWN BY: *C.P. TURNER*

NOTE - THE INFORMATION CONTAINED HEREIN IS NOT IMPLIED OR GUARANTEED BY THE N.C. DEPARTMENT OF TRANSPORTATION AS BEING ACCURATE NOR IT IS CONSIDERED TO BE PART OF THE PLANS, SPECIFICATIONS, OR CONTRACT FOR THE PROJECT.

NOTE - BY HAVING REQUESTED THIS INFORMATION THE CONTRACTOR SPECIFICALLY WAIVES ANY CLAIMS FOR INCREASED COMPENSATION OR EXTENSION OF TIME BASED ON DIFFERENCES BETWEEN THE CONDITIONS INDICATED HEREIN AND THE ACTUAL CONDITIONS AT THE PROJECT SITE.

NORTH CAROLINA LICENSED SEAL 2240 GEOLOGIST TYLER C. BOTTOMS

5/1/14

| PROJECT REFERENCE NO. | SHEET NO. |
|---|---|
| SF-090053 | 2 OF 5 |

NORTH CAROLINA DEPARTMENT OF TRANSPORTATION
DIVISION OF HIGHWAYS
GEOTECHNICAL ENGINEERING UNIT

# SUBSURFACE INVESTIGATION

## SOIL AND ROCK LEGEND, TERMS, SYMBOLS, AND ABBREVIATIONS

### SOIL DESCRIPTION

SOIL IS CONSIDERED TO BE THE UNCONSOLIDATED, SEMI-CONSOLIDATED, OR WEATHERED EARTH MATERIALS THAT CAN BE PENETRATED WITH A CONTINUOUS FLIGHT POWER AUGER, AND YIELD LESS THAN 100 BLOWS PER FOOT ACCORDING TO STANDARD PENETRATION TEST (AASHTO T206, ASTM D-1586). SOIL CLASSIFICATION IS BASED ON THE AASHTO SYSTEM. BASIC DESCRIPTIONS GENERALLY SHALL INCLUDE: CONSISTENCY, COLOR, TEXTURE, MOISTURE, AASHTO CLASSIFICATION, AND OTHER PERTINENT FACTORS SUCH AS MINERALOGICAL COMPOSITION, ANGULARITY, STRUCTURE, PLASTICITY, ETC. EXAMPLE:

*VERY STIFF, GRAY, SILTY CLAY, MOIST WITH INTERBEDDED FINE SAND LAYERS, HIGHLY PLASTIC, A-7-6*

### SOIL LEGEND AND AASHTO CLASSIFICATION

| GENERAL CLASS. | GRANULAR MATERIALS (≤ 35% PASSING #200) | | | | | | | SILT-CLAY MATERIALS (> 35% PASSING #200) | | | | ORGANIC MATERIALS | | |
|---|---|---|---|---|---|---|---|---|---|---|---|---|---|---|
| GROUP CLASS. | A-1 | | A-3 | A-2 | | | | A-4 | A-5 | A-6 | A-7 | A-1, A-2<br>A-3 | A-4, A-5<br>A-6, A-7 | |
| | A-1-a | A-1-b | | A-2-4 | A-2-5 | A-2-6 | A-2-7 | | | | A-7-5<br>A-7-6 | | | |
| SYMBOL | | | | | | | | | | | | | | |
| % PASSING<br>#10<br>#40<br>#200 | 50 MX<br>30 MX<br>15 MX | | 50 MX<br>25 MX | 51 MN<br>10 MX | | | | | | | | GRANULAR SOILS | SILT-CLAY SOILS | MUCK, PEAT |
| LIQUID LIMIT<br>PLASTIC INDEX | 6 MX | | NP | 40 MX<br>10 MX | 41 MN<br>10 MX | 40 MX<br>11 MN | 41 MN<br>11 MN | 40 MX<br>10 MX | 41 MN<br>10 MX | 40 MX<br>11 MN | 41 MN<br>11 MN | SOILS WITH LITTLE OR MODERATE AMOUNTS OF ORGANIC MATTER | | HIGHLY ORGANIC SOILS |
| GROUP INDEX | 0 | | 0 | 8 | | 4 MX | | 8 MX | 12 MX | 16 MX | No MX | | | |
| USUAL TYPES OF MAJOR MATERIALS | STONE FRAGS. GRAVEL, AND SAND | | FINE SAND | SILTY OR CLAYEY GRAVEL AND SAND | | | | SILTY SOILS | | CLAYEY SOILS | | | | |
| GEN. RATING AS A SUBGRADE | EXCELLENT TO GOOD | | | | | | | FAIR TO POOR | | | | FAIR TO POOR | POOR | UNSUITABLE |

PI OF A-7-5 SUBGROUP IS ≤ LL - 30 ; PI OF A-7-6 SUBGROUP IS > LL - 30

### CONSISTENCY OR DENSENESS

| PRIMARY SOIL TYPE | COMPACTNESS OR CONSISTENCY | RANGE OF STANDARD PENETRATION RESISTENCE (N-VALUE) | RANGE OF UNCONFINED COMPRESSIVE STRENGTH (TONS/FT²) |
|---|---|---|---|
| GENERALLY GRANULAR MATERIAL (NON-COHESIVE) | VERY LOOSE | <4 | N/A |
| | LOOSE | 4 TO 10 | |
| | MEDIUM DENSE | 10 TO 30 | |
| | DENSE | 30 TO 50 | |
| | VERY DENSE | >50 | |
| GENERALLY SILT-CLAY MATERIAL (COHESIVE) | VERY SOFT | <2 | <0.25 |
| | SOFT | 2 TO 4 | 0.25 TO 0.50 |
| | MEDIUM STIFF | 4 TO 8 | 0.5 TO 1.0 |
| | STIFF | 8 TO 15 | 1 TO 2 |
| | VERY STIFF | 15 TO 30 | 2 TO 4 |
| | HARD | >30 | >4 |

### TEXTURE OR GRAIN SIZE

| U.S. STD. SIEVE SIZE | | 4 | 10 | 40 | 60 | 200 | 270 |
|---|---|---|---|---|---|---|---|
| OPENING (MM) | | 4.76 | 2.00 | 0.42 | 0.25 | 0.075 | 0.053 |

| BOULDER (BLDR.) | COBBLE (COB.) | GRAVEL (GR.) | COARSE SAND (CSE. SD.) | FINE SAND (F SD.) | SILT (SL.) | CLAY (CL.) |
|---|---|---|---|---|---|---|

| GRAIN SIZE | MM | 305 | 75 | 2.0 | 0.25 | 0.05 | 0.005 |
|---|---|---|---|---|---|---|---|
| | IN. | 12 | 3 | | | | |

### SOIL MOISTURE - CORRELATION OF TERMS

| SOIL MOISTURE SCALE (ATTERBERG LIMITS) | FIELD MOISTURE DESCRIPTION | GUIDE FOR FIELD MOISTURE DESCRIPTION |
|---|---|---|
| | - SATURATED - (SAT.) | USUALLY LIQUID; VERY WET, USUALLY FROM BELOW THE GROUND WATER TABLE |
| LL — LIQUID LIMIT (PLASTIC RANGE (PI)) | - WET - (W) | SEMISOLID; REQUIRES DRYING TO ATTAIN OPTIMUM MOISTURE |
| PL — PLASTIC LIMIT | | |
| OM — OPTIMUM MOISTURE | - MOIST - (M) | SOLID; AT OR NEAR OPTIMUM MOISTURE |
| SL — SHRINKAGE LIMIT | | |
| | - DRY - (D) | REQUIRES ADDITIONAL WATER TO ATTAIN OPTIMUM MOISTURE |

### PLASTICITY

| | PLASTICITY INDEX (PI) | DRY STRENGTH |
|---|---|---|
| NONPLASTIC | 0-5 | VERY LOW |
| LOW PLASTICITY | 6-15 | SLIGHT |
| MED. PLASTICITY | 16-25 | MEDIUM |
| HIGH PLASTICITY | 26 OR MORE | HIGH |

### COLOR

DESCRIPTIONS MAY INCLUDE COLOR OR COLOR COMBINATIONS (TAN, RED, YELLOW-BROWN, BLUE-GRAY). MODIFIERS SUCH AS LIGHT, DARK, STREAKED, ETC. ARE USED TO DESCRIBE APPEARANCE.

### GRADATION

WELL GRADED - INDICATES A GOOD REPRESENTATION OF PARTICLE SIZES FROM FINE TO COARSE.
UNIFORM - INDICATES THAT SOIL PARTICLES ARE ALL APPROXIMATELY THE SAME SIZE. (ALSO POORLY GRADED)
GAP-GRADED - INDICATES A MIXTURE OF UNIFORM PARTICLES OF TWO OR MORE SIZES.

### ANGULARITY OF GRAINS

THE ANGULARITY OR ROUNDNESS OF SOIL GRAINS IS DESIGNATED BY THE TERMS: ANGULAR, SUBANGULAR, SUBROUNDED, OR ROUNDED.

### MINERALOGICAL COMPOSITION

MINERAL NAMES SUCH AS QUARTZ, FELDSPAR, MICA, TALC, KAOLIN, ETC. ARE USED IN DESCRIPTIONS WHENEVER THEY ARE CONSIDERED OF SIGNIFICANCE.

### COMPRESSIBILITY

| | |
|---|---|
| SLIGHTLY COMPRESSIBLE | LIQUID LIMIT LESS THAN 31 |
| MODERATELY COMPRESSIBLE | LIQUID LIMIT EQUAL TO 31-50 |
| HIGHLY COMPRESSIBLE | LIQUID LIMIT GREATER THAN 50 |

### PERCENTAGE OF MATERIAL

| ORGANIC MATERIAL | GRANULAR SOILS | SILT - CLAY SOILS | OTHER MATERIAL | |
|---|---|---|---|---|
| TRACE OF ORGANIC MATTER | 2 - 3% | 3 - 5% | TRACE | 1 - 10% |
| LITTLE ORGANIC MATTER | 3 - 5% | 5 - 12% | LITTLE | 10 - 20% |
| MODERATELY ORGANIC | 5 - 10% | 12 - 20% | SOME | 20 - 35% |
| HIGHLY ORGANIC | >10% | >20% | HIGHLY | 35% AND ABOVE |

### GROUND WATER

- WATER LEVEL IN BORE HOLE IMMEDIATELY AFTER DRILLING
- STATIC WATER LEVEL AFTER 24 HOURS
- PW — PERCHED WATER, SATURATED ZONE, OR WATER BEARING STRATA
- SPRING OR SEEP

### MISCELLANEOUS SYMBOLS

- ROADWAY EMBANKMENT (RE) WITH SOIL DESCRIPTION
- SOIL SYMBOL
- ARTIFICIAL FILL (AF) OTHER THAN ROADWAY EMBANKMENT
- INFERRED SOIL BOUNDARY
- INFERRED ROCK LINE
- ALLUVIAL SOIL BOUNDARY
- 25/025 — DIP & DIP DIRECTION OF ROCK STRUCTURES
- SPT / DPT DMT VST PMT — TEST BORING
- AUGER BORING
- CORE BORING
- MW — MONITORING WELL
- PIEZOMETER INSTALLATION
- SLOPE INDICATOR INSTALLATION
- CONE PENETROMETER TEST
- SOUNDING ROD
- TEST BORING W/ CORE
- SPT N-VALUE
- REF — SPT REFUSAL

### ABBREVIATIONS

AR - AUGER REFUSAL
BT - BORING TERMINATED
CL. - CLAY
CPT - CONE PENETRATION TEST
CSE. - COARSE
DMT - DILATOMETER TEST
DPT - DYNAMIC PENETRATION TEST
e - VOID RATIO
F - FINE
FOSS. - FOSSILIFEROUS
FRAC. - FRACTURED, FRACTURES
FRAGS. - FRAGMENTS
HI. - HIGHLY
MED. - MEDIUM
MICA. - MICACEOUS
MOD. - MODERATELY
NP - NON PLASTIC
ORG. - ORGANIC
PMT - PRESSUREMETER TEST
SAP. - SAPROLITIC
SD. - SAND, SANDY
SL. - SILT, SILTY
SLI. - SLIGHTLY
TCR - TRICONE REFUSAL
w - MOISTURE CONTENT
V - VERY
VST - VANE SHEAR TEST
WEA. - WEATHERED
$\gamma$ - UNIT WEIGHT
$\gamma_d$ - DRY UNIT WEIGHT

SAMPLE ABBREVIATIONS
S - BULK
SS - SPLIT SPOON
ST - SHELBY TUBE
RS - ROCK
RT - RECOMPACTED TRIAXIAL
CBR - CALIFORNIA BEARING RATIO

### EQUIPMENT USED ON SUBJECT PROJECT

DRILL UNITS:
- [ ] MOBILE B-___
- [ ] BK-51
- [ ] CME-45C
- [ ] CME-550
- [ ] PORTABLE HOIST
- [X] D-50
- [ ] _____

ADVANCING TOOLS:
- [ ] CLAY BITS
- [ ] 6" CONTINUOUS FLIGHT AUGER
- [ ] 8" HOLLOW AUGERS
- [ ] HARD FACED FINGER BITS
- [ ] TUNG.-CARBIDE INSERTS
- [X] CASING [ ] W/ ADVANCER
- [X] TRICONE 2 15/16 " STEEL TEETH
- [ ] TRICONE _____ " TUNG.-CARB.
- [ ] CORE BIT
- [ ] _____

HAMMER TYPE:
- [X] AUTOMATIC
- [ ] MANUAL

CORE SIZE:
- [ ] -B_____
- [ ] -N_____
- [ ] -H_____

HAND TOOLS:
- [ ] POST HOLE DIGGER
- [ ] HAND AUGER
- [ ] SOUNDING ROD
- [ ] VANE SHEAR TEST
- [ ] _____

### ROCK DESCRIPTION

HARD ROCK IS NON-COASTAL PLAIN MATERIAL THAT IF TESTED, WOULD YIELD SPT REFUSAL. AN INFERRED ROCK LINE INDICATES THE LEVEL AT WHICH NON-COASTAL PLAIN MATERIAL WOULD YIELD SPT REFUSAL. SPT REFUSAL IS PENETRATION BY A SPLIT SPOON SAMPLER EQUAL TO OR LESS THAN 0.1 FOOT PER 60 BLOWS. IN NON-COASTAL PLAIN MATERIAL, THE TRANSITION BETWEEN SOIL AND ROCK IS OFTEN REPRESENTED BY A ZONE OF WEATHERED ROCK.
ROCK MATERIALS ARE TYPICALLY DIVIDED AS FOLLOWS:

| | |
|---|---|
| WEATHERED ROCK (WR) | NON-COASTAL PLAIN MATERIAL THAT WOULD YIELD SPT N VALUES > 100 BLOWS PER FOOT IF TESTED. |
| CRYSTALLINE ROCK (CR) | FINE TO COARSE GRAIN IGNEOUS AND METAMORPHIC ROCK THAT WOULD YIELD SPT REFUSAL IF TESTED. ROCK TYPE INCLUDES GRANITE, GNEISS, GABBRO, SCHIST, ETC. |
| NON-CRYSTALLINE ROCK (NCR) | FINE TO COARSE GRAIN METAMORPHIC AND NON-COASTAL PLAIN SEDIMENTARY ROCK THAT WOULD YEILD SPT REFUSAL IF TESTED. ROCK TYPE INCLUDES PHYLLITE, SLATE, SANDSTONE, ETC. |
| COASTAL PLAIN SEDIMENTARY ROCK (CP) | COASTAL PLAIN SEDIMENTS CEMENTED INTO ROCK, BUT MAY NOT YIELD SPT REFUSAL. ROCK TYPE INCLUDES LIMESTONE, SANDSTONE, CEMENTED SHELL BEDS, ETC. |

### WEATHERING

| | |
|---|---|
| FRESH | ROCK FRESH, CRYSTALS BRIGHT, FEW JOINTS MAY SHOW SLIGHT STAINING. ROCK RINGS UNDER HAMMER IF CRYSTALLINE. |
| VERY SLIGHT (V SLI.) | ROCK GENERALLY FRESH, JOINTS STAINED, SOME JOINTS MAY SHOW THIN CLAY COATINGS IF OPEN, CRYSTALS ON A BROKEN SPECIMEN FACE SHINE BRIGHTLY. ROCK RINGS UNDER HAMMER BLOWS IF OF A CRYSTALLINE NATURE. |
| SLIGHT (SLI.) | ROCK GENERALLY FRESH, JOINTS STAINED AND DISCOLORATION EXTENDS INTO ROCK UP TO 1 INCH. OPEN JOINTS MAY CONTAIN CLAY. IN GRANITOID ROCKS SOME OCCASIONAL FELDSPAR CRYSTALS ARE DULL AND DISCOLORED. CRYSTALLINE ROCKS RING UNDER HAMMER BLOWS. |
| MODERATE (MOD.) | SIGNIFICANT PORTIONS OF ROCK SHOW DISCOLORATION AND WEATHERING EFFECTS. IN GRANITOID ROCKS, MOST FELDSPARS ARE DULL AND DISCOLORED, SOME SHOW CLAY. ROCK HAS DULL SOUND UNDER HAMMER BLOWS AND SHOWS SIGNIFICANT LOSS OF STRENGTH AS COMPARED WITH FRESH ROCK. |
| MODERATELY SEVERE (MOD. SEV.) | ALL ROCK EXCEPT QUARTZ DISCOLORED OR STAINED. IN GRANITOID ROCKS, ALL FELDSPARS DULL AND DISCOLORED AND A MAJORITY SHOW KAOLINIZATION. ROCK SHOWS SEVERE LOSS OF STRENGTH AND CAN BE EXCAVATED WITH A GEOLOGIST'S PICK. ROCK GIVES "CLUNK" SOUND WHEN STRUCK. *IF TESTED, WOULD YIELD SPT REFUSAL* |
| SEVERE (SEV.) | ALL ROCK EXCEPT QUARTZ DISCOLORED OR STAINED. ROCK FABRIC CLEAR AND EVIDENT BUT REDUCED IN STRENGTH TO STRONG SOIL. IN GRANITOID ROCKS ALL FELDSPARS ARE KAOLINIZED TO SOME EXTENT. SOME FRAGMENTS OF STRONG ROCK USUALLY REMAIN. *IF TESTED, YIELDS SPT N VALUES > 100 BPF* |
| VERY SEVERE (V SEV.) | ALL ROCK EXCEPT QUARTZ DISCOLORED OR STAINED. ROCK FABRIC ELEMENTS ARE DISCERNIBLE BUT THE MASS IS EFFECTIVELY REDUCED TO SOIL STATUS, WITH ONLY FRAGMENTS OF STRONG ROCK REMAINING. SAPROLITE IS AN EXAMPLE OF ROCK WEATHERED TO A DEGREE SUCH THAT ONLY MINOR VESTIGES OF THE ORIGINAL ROCK FABRIC REMAIN. *IF TESTED, YIELDS SPT N VALUES < 100 BPF* |
| COMPLETE | ROCK REDUCED TO SOIL. ROCK FABRIC NOT DISCERNIBLE, OR DISCERNIBLE ONLY IN SMALL AND SCATTERED CONCENTRATIONS. QUARTZ MAY BE PRESENT AS DIKES OR STRINGERS. SAPROLITE IS ALSO AN EXAMPLE. |

### ROCK HARDNESS

| | |
|---|---|
| VERY HARD | CANNOT BE SCRATCHED BY KNIFE OR SHARP PICK. BREAKING OF HAND SPECIMENS REQUIRES SEVERAL HARD BLOWS OF THE GEOLOGIST'S PICK. |
| HARD | CAN BE SCRATCHED BY KNIFE OR PICK ONLY WITH DIFFICULTY. HARD HAMMER BLOWS REQUIRED TO DETACH HAND SPECIMEN. |
| MODERATELY HARD | CAN BE SCRATCHED BY KNIFE OR PICK. GOUGES OR GROOVES TO 0.25 INCHES DEEP CAN BE EXCAVATED BY HARD BLOW OF A GEOLOGIST'S PICK. HAND SPECIMENS CAN BE DETACHED BY MODERATE BLOWS. |
| MEDIUM HARD | CAN BE GROOVED OR GOUGED 0.05 INCHES DEEP BY FIRM PRESSURE OF KNIFE OR PICK POINT. CAN BE EXCAVATED IN SMALL CHIPS TO PEICES 1 INCH MAXIMUM SIZE BY HARD BLOWS OF THE POINT OF A GEOLOGIST'S PICK. |
| SOFT | CAN BE GROVED OR GOUGED READILY BY KNIFE OR PICK. CAN BE EXCAVATED IN FRAGMENTS FROM CHIPS TO SEVERAL INCHES IN SIZE BY MODERATE BLOWS OF A PICK POINT. SMALL, THIN PIECES CAN BE BROKEN BY FINGER PRESSURE. |
| VERY SOFT | CAN BE CARVED WITH KNIFE. CAN BE EXCAVATED READILY WITH POINT OF PICK. PIECES 1 INCH OR MORE IN THICKNESS CAN BE BROKEN BY FINGER PRESSURE. CAN BE SCRATCHED READILY BY FINGERNAIL. |

### FRACTURE SPACING

| TERM | SPACING |
|---|---|
| VERY WIDE | MORE THAN 10 FEET |
| WIDE | 3 TO 10 FEET |
| MODERATELY CLOSE | 1 TO 3 FEET |
| CLOSE | 0.16 TO 1 FEET |
| VERY CLOSE | LESS THAN 0.16 FEET |

### BEDDING

| TERM | THICKNESS |
|---|---|
| VERY THICKLY BEDDED | > 4 FEET |
| THICKLY BEDDED | 1.5 - 4 FEET |
| THINLY BEDDED | 0.16 - 1.5 FEET |
| VERY THINLY BEDDED | 0.03 - 0.16 FEET |
| THICKLY LAMINATED | 0.008 - 0.03 FEET |
| THINLY LAMINATED | < 0.008 FEET |

### INDURATION

FOR SEDIMENTARY ROCKS, INDURATION IS THE HARDENING OF THE MATERIAL BY CEMENTING, HEAT, PRESSURE, ETC.

| | |
|---|---|
| FRIABLE | RUBBING WITH FINGER FREES NUMEROUS GRAINS; GENTLE BLOW BY HAMMER DISINTEGRATES SAMPLE. |
| MODERATELY INDURATED | GRAINS CAN BE SEPARATED FROM SAMPLE WITH STEEL PROBE; BREAKS EASILY WHEN HIT WITH HAMMER. |
| INDURATED | GRAINS ARE DIFFICULT TO SEPARATE WITH STEEL PROBE; DIFFICULT TO BREAK WITH HAMMER. |
| EXTREMELY INDURATED | SHARP HAMMER BLOWS REQUIRED TO BREAK SAMPLE; SAMPLE BREAKS ACROSS GRAINS. |

### TERMS AND DEFINITIONS

ALLUVIUM (ALLUV.) - SOILS THAT HAVE BEEN TRANSPORTED BY WATER.

AQUIFER - A WATER BEARING FORMATION OR STRATA.

ARENACEOUS - APPLIED TO ROCKS THAT HAVE BEEN DERIVED FROM SAND OR THAT CONTAIN SAND.

ARGILLACEOUS - APPLIED TO ALL ROCKS OR SUBSTANCES COMPOSED OF CLAY MINERALS, OR HAVING A NOTABLE PROPORTION OF CLAY IN THEIR COMPOSITION, AS SHALE, SLATE, ETC.

ARTESIAN - GROUND WATER THAT IS UNDER SUFFICIENT PRESSURE TO RISE ABOVE THE LEVEL AT WHICH IT IS ENCOUNTERED, BUT WHICH DOES NOT NECESSARILY RISE TO OR ABOVE THE GROUND SURFACE.

CALCAREOUS (CALC.) - SOILS THAT CONTAIN APPRECIABLE AMOUNTS OF CALCIUM CARBONATE.

COLLUVIUM - ROCK FRAGMENTS MIXED WITH SOIL DEPOSITED BY GRAVITY ON SLOPE OR AT BOTTOM OF SLOPE.

CORE RECOVERY (REC.) - TOTAL LENGTH OF ALL MATERIAL RECOVERED IN THE CORE BARREL DIVIDED BY TOTAL LENGTH OF CORE RUN AND EXPRESSED AS A PERCENTAGE.

DIKE - A TABULAR BODY OF IGNEOUS ROCK THAT CUTS ACROSS THE STRUCTURE OF ADJACENT ROCKS OR CUTS MASSIVE ROCK.

DIP - THE ANGLE AT WHICH A STRATUM OR ANY PLANAR FEATURE IS INCLINED FROM THE HORIZONTAL.

DIP DIRECTION (DIP AZIMUTH) - THE DIRECTION OR BEARING OF THE HORIZONTAL TRACE OF THE LINE OF DIP, MEASURED CLOCKWISE FROM NORTH.

FAULT - A FRACTURE OR FRACTURE ZONE ALONG WHICH THERE HAS BEEN DISPLACEMENT OF THE SIDES RELATIVE TO ONE ANOTHER PARALLEL TO THE FRACTURE.

FISSILE - A PROPERTY OF SPLITTING ALONG CLOSELY SPACED PARALLEL PLANES.

FLOAT - ROCK FRAGMENTS ON SURFACE NEAR THEIR ORIGINAL POSITION AND DISLODGED FROM PARENT MATERIAL.

FLOOD PLAIN (FP) - LAND BORDERING A STREAM, BUILT OF SEDIMENTS DEPOSITED BY THE STREAM.

FORMATION (FM.) - A MAPPABLE GEOLOGIC UNIT THAT CAN BE RECOGNIZED AND TRACED IN THE FIELD.

JOINT - FRACTURE IN ROCK ALONG WHICH NO APPRECIABLE MOVEMENT HAS OCCURRED.

LEDGE - A SHELF-LIKE RIDGE OR PROJECTION OF ROCK WHOSE THICKNESS IS SMALL COMPARED TO ITS LATERAL EXTENT.

LENS - A BODY OF SOIL OR ROCK THAT THINS OUT IN ONE OR MORE DIRECTIONS.

MOTTLED (MOT.) - IRREGULARLY MARKED WITH SPOTS OF DIFFERENT COLORS. MOTTLING IN SOILS USUALLY INDICATES POOR AERATION AND LACK OF GOOD DRAINAGE.

PERCHED WATER - WATER MAINTAINED ABOVE THE NORMAL GROUND WATER LEVEL BY THE PRESENCE OF AN INTERVENING IMPERVIOUS STRATUM.

RESIDUAL (RES.) SOIL - SOIL FORMED IN PLACE BY THE WEATHERING OF ROCK.

ROCK QUALITY DESIGNATION (RQD) - A MEASURE OF ROCK QUALITY DESCRIBED BY TOTAL LENGTH OF ROCK SEGMENTS EQUAL TO OR GREATER THAN 4 INCHES DIVIDED BY THE TOTAL LENGTH OF CORE RUN AND EXPRESSED AS A PERCENTAGE.

SAPROLITE (SAP.) - RESIDUAL SOIL THAT RETAINS THE RELIC STRUCTURE OR FABRIC OF THE PARENT ROCK.

SILL - AN INTRUSIVE BODY OF IGNEOUS ROCK OF APPROXIMATELY UNIFORM THICKNESS AND RELATIVELY THIN COMPARED WITH ITS LATERAL EXTENT, THAT HAS BEEN EMPLACED PARALLEL TO THE BEDDING OR SCHISTOSITY OF THE INTRUDED ROCKS.

SLICKENSIDE - POLISHED AND STRIATED SURFACE THAT RESULTS FROM FRICTION ALONG A FAULT OR SLIP PLANE.

STANDARD PENETRATION TEST (PENETRATION RESISTANCE) (SPT) - NUMBER OF BLOWS IN OR BPF OF A 140 LB. HAMMER FALLING 30 INCHES REQUIRED TO PRODUCE A PENETRATION OF 1 FOOT INTO SOIL WITH A 2 INCH OUTSIDE DIAMETER SPLIT SPOON SAMPLER. SPT REFUSAL IS PENETRATION EQUAL TO OR LESS THAN 0.1 FOOT PER 60 BLOWS.

STRATA CORE RECOVERY (SREC.) - TOTAL LENGTH OF STRATA MATERIAL RECOVERED DIVIDED BY TOTAL LENGTH OF STRATUM AND EXPRESSED AS A PERCENTAGE.

STRATA ROCK QUALITY DESIGNATION (SRQD) - A MEASURE OF ROCK QUALITY DESCRIBED BY TOTAL LENGTH OF ROCK SEGMENTS WITHIN A STRATUM EQUAL TO OR GREATER THAN 4 INCHES DIVIDED BY THE TOTAL LENGTH OF STRATA AND EXPRESSED AS A PERCENTAGE.

TOPSOIL (TS.) - SURFACE SOILS USUALLY CONTAINING ORGANIC MATTER.

BENCH MARK: TBM-1: BENCHTIE NAIL IN BASE OF 18" PINE AT -L-
STA. 13+89.55, 44.87' LT
ELEVATION: 6.22 FT.

NOTES:

REVISED 09/23/09

| PROJECT REFERENCE NO. | SHEET |
|---|---|
| SF-090053 | 3 OF 5 |

# SITE PLAN

0 30 60
FEET

SKEW = 90°

N

13

15

SHARRON CREEK

WOODS

EXISTING BRIDGE NO. 53

EB2-A

EB1-B

TO SHELL POINT RD

SR 1134 (GRAY BRIDGE RD)

TO NC 130

WOODS

WOODS

EB1 BENT LINE

EB2 BENT LINE

WLB

F

C

JS

| PROJECT REFERENCE NO. | SHEET NO. |
|---|---|
| SF-090053 | 4 OF 5 |
| ROADWAY DESIGN ENGINEER | HYDRAULICS ENGINEER |

INCOMPLETE PLANS
DO NOT USE FOR R/W ACQUISITION

PRELIMINARY PLANS
DO NOT USE FOR CONSTRUCTION

# PROFILE THROUGH BORINGS PROJECTED ALONG -L-

VE = 2.0

EB1-B
13+80
22' RT

EB2-A
14+67
17' LT

Ⓐ SOFT GRAY LIMESTONE (PEEDEE FORMATION)

LOOSE BROWN SAND, MOIST (ROADWAY EMBANKMENT)

VERY LOOSE BROWN MODERATELY ORGANIC AND GRAY SAND WITH WOOD FRAGMENTS,

VERY LOOSE TO LOOSE BROWN AND GRAY SAND WITH WOOD FRAGMENTS,

HARD GRAY SANDY SILT, WET (PEEDEE FORMATION)

HARD GRAY CLAY, WET (PEEDEE FORMATION)

VERY STIFF TO HARD GRAY SANDY CLAY, WET (PEEDEE FORMATION)

VERY STIFF TO HARD GRAY SANDY CLAY, WET (PEEDEE FORMATION)

SOFT GRAY LIMESTONE (PEEDEE FORMATION)

WATER SURFACE 12/13

04/14

LOOSE BROWN SAND, MOIST (ROADWAY EMBANKMENT)

MOIST TO SATURATED (ALLUVIAL)

SATURATED (ALLUVIAL)

| EB1-B | | EB2-A | |
|---|---|---|---|
| 4 | | 4 | |
| 1 | | WOH | |
| 5 | | 3 | |
| 6 | | 9 | |
| 32 | | 51 | |
| 59 | | 85 | |
| 44 | | 100/0.8 | |
| 100/0.8 | | 34 | |
| 56 | | 25 | |
| 68 | | 100/0.8 | |
| 37 | | 100/0.6 | |
| 59 | | 17 | |
| 100/0.7 | | 100/0.7 | |

NOTE: GROUNDLINE PROFILE ALONG -L- TAKEN FROM BRIDGE SURVEY AND HYDRAULIC DESIGN REPORT DATED 02/19/14.

NOTE: INFERRED STRATIGRAPHY IS DRAWN THROUGH THE BORINGS WITH BOTH PROJECTED ONTO PROFILE.

40 35 30 25 20 15 10 5 0 -5 -10 -15 -20 -25 -30 -35 -40 -45 -50 -55 -60

13+00 13+50 14+00 14+50 15+00 15+50

5/14/99

01-MAY-2014 12:03
L:\ERO\Greenville_Investigation\TIP\SF090053_GEO_BRDG0053_BRUNSWICK\CADD_GEOTECH\Site&Sub\SF090053_GED_BRDG_GTM.dgn
Instructions: A4 Portrait

# NCDOT GEOTECHNICAL ENGINEERING UNIT
# BOREHOLE REPORT

| | | | | |
|---|---|---|---|---|
| **WBS** 17BP.3.R.32 | **TIP** SF-090053 | **COUNTY** BRUNSWICK | **GEOLOGIST** Gemperline, J. D. | |
| **SITE DESCRIPTION** BRIDGE NO. 53 ON -L- (SR 1134) OVER SHARRON CREEK | | | | **GROUND WTR (ft)** |
| **BORING NO.** EB1-B | **STATION** 13+80 | **OFFSET** 22 ft RT | **ALIGNMENT** -L- | **0 HR.** N/A |
| **COLLAR ELEV.** 5.0 ft | **TOTAL DEPTH** 59.7 ft | **NORTHING** 83,035 | **EASTING** 2,194,618 | **24 HR.** 4.0 |
| **DRILL RIG/HAMMER EFF./DATE** SUM0093 DIEDRICH D-50 86% 08/15/2013 | | **DRILL METHOD** Mud Rotary | **HAMMER TYPE** Automatic | |
| **DRILLER** Contract Driller | **START DATE** 04/28/14 | **COMP. DATE** 04/29/14 | **SURFACE WATER DEPTH** N/A | |

| ELEV (ft) | DRIVE ELEV (ft) | DEPTH (ft) | BLOW COUNT 0.5ft | 0.5ft | 0.5ft | BLOWS PER FOOT 0 25 50 75 100 | SAMP. NO. | MOI | LOG | SOIL AND ROCK DESCRIPTION | ELEV. (ft) | DEPTH (ft) |
|---|---|---|---|---|---|---|---|---|---|---|---|---|
| | | | | | | | | | | GROUND SURFACE | 5.0 | 0.0 |
| | 5.0 | 0.0 | 1 | 2 | 2 | 4 | | | | **ROADWAY EMBANKMENT** BROWN SAND, MOIST | 2.0 | 3.0 |
| | 1.5 | 3.5 | WOH | WOH | 1 | 1 | | | | **ALLUVIAL** BROWN MODERATELY ORGANIC SAND, MOIST TO SATURATED | -2.0 | 7.0 |
| | -3.5 | 8.5 | 6 | 3 | 2 | 5 | | | | **ALLUVIAL** BROWN AND GRAY SAND WITH WOOD FRAGMENTS, SATURATED | -12.0 | 17.0 |
| | -8.5 | 13.5 | 1 | 4 | 2 | 6 | | | | **COASTAL PLAIN** GRAY SANDY SILT AND CLAY, WET (PEEDEE FORMATION) | -22.0 | 27.0 |
| | -13.5 | 18.5 | 12 | 11 | 21 | 32 | | | | **COASTAL PLAIN** SOFT GRAY LIMESTONE (PEEDEE FORMATION) | -29.5 | 34.5 |
| | -18.5 | 23.5 | 16 | 30 | 29 | 59 | | | | **COASTAL PLAIN** GRAY SANDY CLAY, WET (PEEDEE FORMATION) | -30.0 | 35.0 |
| | -23.5 | 28.5 | 27 | 18 | 26 | 44 | | | | | | |
| | -28.5 | 33.5 | 37 | 22 | 78/0.3 | 100/0.8 | | | | | | |
| | -33.5 | 38.5 | 5 | 14 | 42 | 56 | | | | | | |
| | -38.5 | 43.5 | 16 | 15 | 53 | 68 | | | | | | |
| | -43.5 | 48.5 | 5 | 19 | 18 | 37 | | | | | | |
| | -48.5 | 53.5 | 4 | 25 | 34 | 59 | | | | | | |
| | -53.5 | 58.5 | 18 | 11 | 89/0.2 | 100/0.7 | | | | | -52.0 | 57.0 |
| | | | | | | | | | | | -54.5 | 59.5 |
| | | | | | | | | | | | -54.7 | 59.7 |
| | | | | | | | | | | **COASTAL PLAIN** SOFT GRAY LIMESTONE (PEEDEE FORMATION) Boring Terminated at Elevation -54.7 ft in Limestone | | |

| | | | | |
|---|---|---|---|---|
| **WBS** 17BP.3.R.32 | **TIP** SF-090053 | **COUNTY** BRUNSWICK | **GEOLOGIST** Gemperline, J. D. | |
| **SITE DESCRIPTION** BRIDGE NO. 53 ON -L- (SR 1134) OVER SHARRON CREEK | | | | **GROUND WTR (ft)** |
| **BORING NO.** EB2-A | **STATION** 14+67 | **OFFSET** 17 ft LT | **ALIGNMENT** -L- | **0 HR.** N/A |
| **COLLAR ELEV.** 6.2 ft | **TOTAL DEPTH** 60.0 ft | **NORTHING** 83,130 | **EASTING** 2,194,614 | **24 HR.** 5.2 |
| **DRILL RIG/HAMMER EFF./DATE** SUM0093 DIEDRICH D-50 86% 08/15/2013 | | **DRILL METHOD** Mud Rotary | **HAMMER TYPE** Automatic | |
| **DRILLER** Contract Driller | **START DATE** 04/28/14 | **COMP. DATE** 04/28/14 | **SURFACE WATER DEPTH** N/A | |

| ELEV (ft) | DRIVE ELEV (ft) | DEPTH (ft) | BLOW COUNT 0.5ft | 0.5ft | 0.5ft | BLOWS PER FOOT 0 25 50 75 100 | SAMP. NO. | MOI | LOG | SOIL AND ROCK DESCRIPTION | ELEV. (ft) | DEPTH (ft) |
|---|---|---|---|---|---|---|---|---|---|---|---|---|
| | | | | | | | | | | GROUND SURFACE | 6.2 | 0.0 |
| | 6.2 | 0.0 | 1 | 2 | 2 | 4 | | | | **ROADWAY EMBANKMENT** BROWN SAND, MOIST | 3.2 | 3.0 |
| | 2.2 | 4.0 | WOH | WOH | WOH | 0 | | | | **ALLUVIAL** BROWN MODERATELY ORGANIC SAND, MOIST TO SATURATED | 0.8 | 7.0 |
| | -2.6 | 8.8 | 1 | 2 | 1 | 3 | | | | **ALLUVIAL** BROWN AND GRAY SAND WITH WOOD FRAGMENTS, SATURATED | -9.3 | 15.5 |
| | -7.6 | 13.8 | 5 | 6 | 3 | 9 | | | | **COASTAL PLAIN** GRAY SANDY SILT, WET (PEEDEE FORMATION) | -23.1 | 29.3 |
| | -12.6 | 18.8 | 14 | 19 | 32 | 51 | | | | **COASTAL PLAIN** SOFT GRAY LIMESTONE (PEEDEE FORMATION) | -24.1 | 30.3 |
| | -17.6 | 23.8 | 16 | 24 | 61 | 85 | | | | **COASTAL PLAIN** GRAY SANDY CLAY, WET (PEEDEE FORMATION) | -29.3 | 35.5 |
| | -22.6 | 28.8 | 18 | 65 | 35/0.3 | 100/0.8 | | | | **COASTAL PLAIN** SOFT GRAY LIMESTONE (PEEDEE FORMATION) | -29.7 | 35.9 |
| | -27.6 | 33.8 | 33 | 14 | 20 | 34 | | | | **COASTAL PLAIN** GRAY SANDY CLAY, WET (PEEDEE FORMATION) | -38.6 | 44.8 |
| | -32.6 | 38.8 | 6 | 13 | 12 | 25 | | | | **COASTAL PLAIN** SOFT GRAY LIMESTONE (PEEDEE FORMATION) | -40.1 | 46.3 |
| | -37.6 | 43.8 | 36 | 27 | 73/0.3 | 100/0.8 | | | | **COASTAL PLAIN** GRAY SANDY CLAY, WET (PEEDEE FORMATION) | -43.6 | 49.8 |
| | -42.6 | 48.8 | 14 | 55 | 45/0.1 | 100/0.6 | | | | **COASTAL PLAIN** SOFT GRAY LIMESTONE (PEEDEE FORMATION) | -43.8 | 50.0 |
| | -47.6 | 53.8 | 3 | 3 | 14 | 17 | | | | **COASTAL PLAIN** GRAY SANDY CLAY, WET (PEEDEE FORMATION) | -53.6 | 59.8 |
| | -52.6 | 58.8 | 21 | 27 | 73/0.2 | 100/0.7 | | | | **COASTAL PLAIN** SOFT GRAY LIMESTONE (PEEDEE FORMATION) | -53.8 | 60.0 |
| | | | | | | | | | | Boring Terminated at Elevation -53.8 ft in Limestone | | |

NCDOT BORE DOUBLE SF-090053_GEO_BRDG.GPJ NC_DOT.GDT 5/1/14

8/17/99

REVISIONS

# LOCHNER

H. W. LOCHNER, INC.
2840 PLAZA PLACE, SUITE 202
RALEIGH, NC 27612

NC License Number F-0159

ECOLOGICAL ENGINEERING
NC FIRM LICENSE No: F-1148
1151 SE Cary Parkway
Suite 101
Cary, NC 27518
(919) 557-0929

| PROJECT REFERENCE NO. | SHEET NO. |
|---|---|
| 17BP.3.R.32 | 4 |
| RW SHEET NO. | |
| ROADWAY DESIGN ENGINEER | HYDRAULICS ENGINEER |

**INCOMPLETE PLANS**
DO NOT USE FOR R/W ACQUISITION

**PRELIMINARY PLANS**
DO NOT USE FOR CONSTRUCTION

PERMIT DRAWING
SHEET __ OF __

F/E — DENOTES EXCAVATION IN WETLAND
F/F — DENOTES FILL IN WETLAND
HC/HC — DENOTES HAND CLEARING

NAD 83

SITE 4

1 LM PROPERTIES OF WILMINGTON, LLC

2 PHILLIP M. MURPHY, III & WIFE, JENNIFER H. MURPHY

3 SARA S. McMILLIAN & MICHAEL R. McMILLIAN

4 WILLIAM O. HEWETT

RICHARD BRAY

SITE 3

SITE 2

SITE 1

LM PROPERTIES OF WILMINGTON, LLC

TBM#1
-BL- STA 16+29.67'
41.47' LT EL=6.22'
"BENCHTIE NAIL IN 18" PINE TREE"

HIGH WATER MARK (SEE NOTE)

SHARPON CREEK

(GRISSETT SWAMP)

CL B RIP RAP PAD DATA
Q10 = 0.60 cfs
V10(pipe) = 4.6 ft/s
V10(pad) = 0.5 ft/s

CL B RIP RAP PAD DATA
Q10 = 0.50 cfs
V10(pipe) = 5.3 ft/s
V10(pad) = 0.4 ft/s

TO NC 130 HOLDEN BEACH RD SW

GRAY BRIDGE RD SW

NOTE: HIGH WATER MARK ELEV=2.46' TAKEN @ 11:43 AM ON WEDNESDAY NOVEMBER 6TH 2013

## BRIDGE / PAVEMENT RELATIONSHIP SKETCH

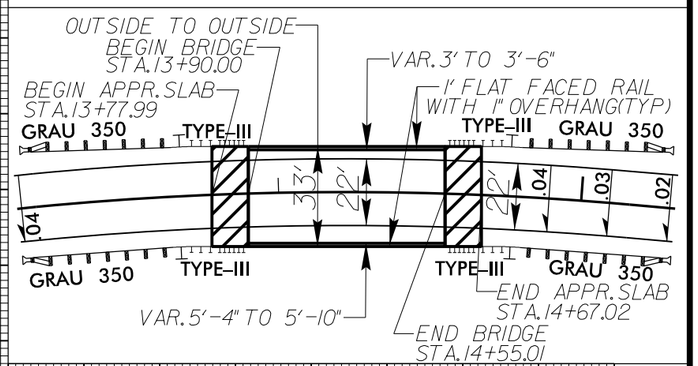


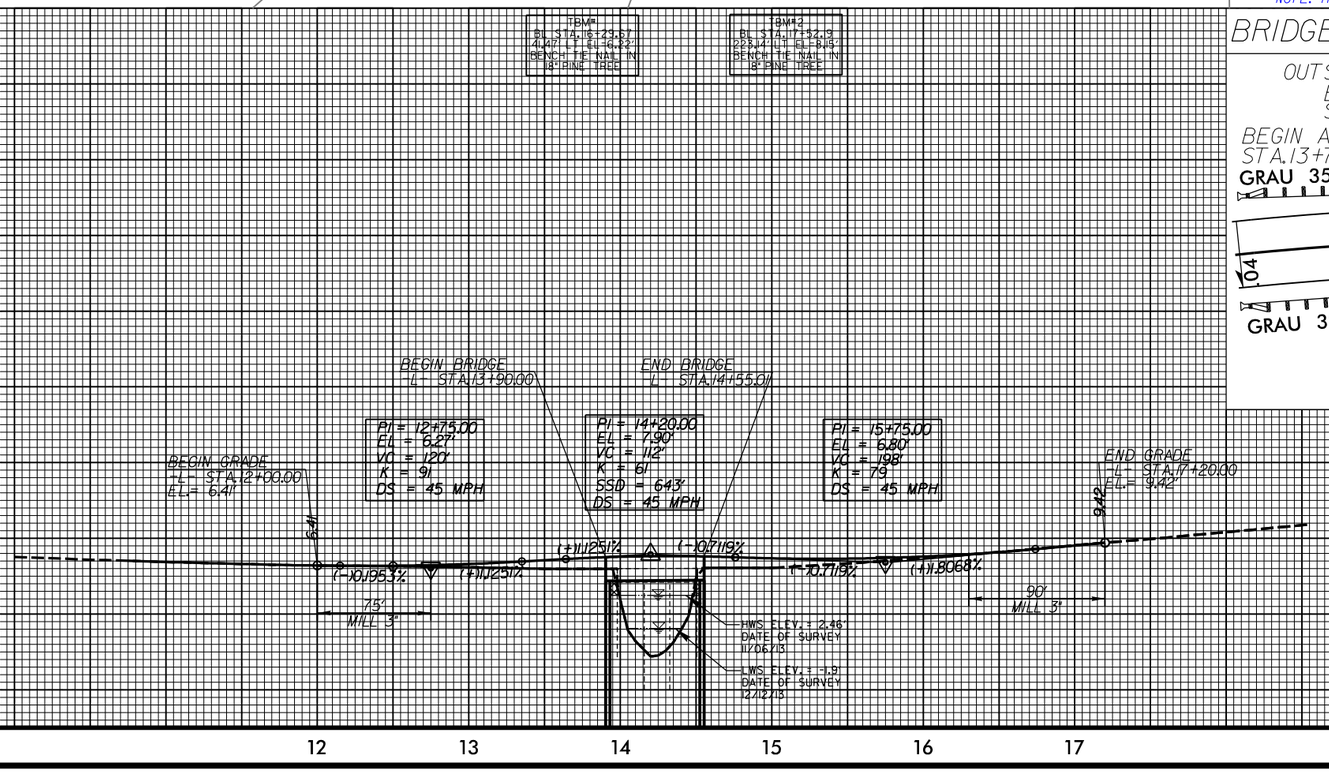


$$$$$$SYSTIME$$$$$
$$$$$$USERNAME$$$$
$$$$$$DGN$$$$$$$$$$

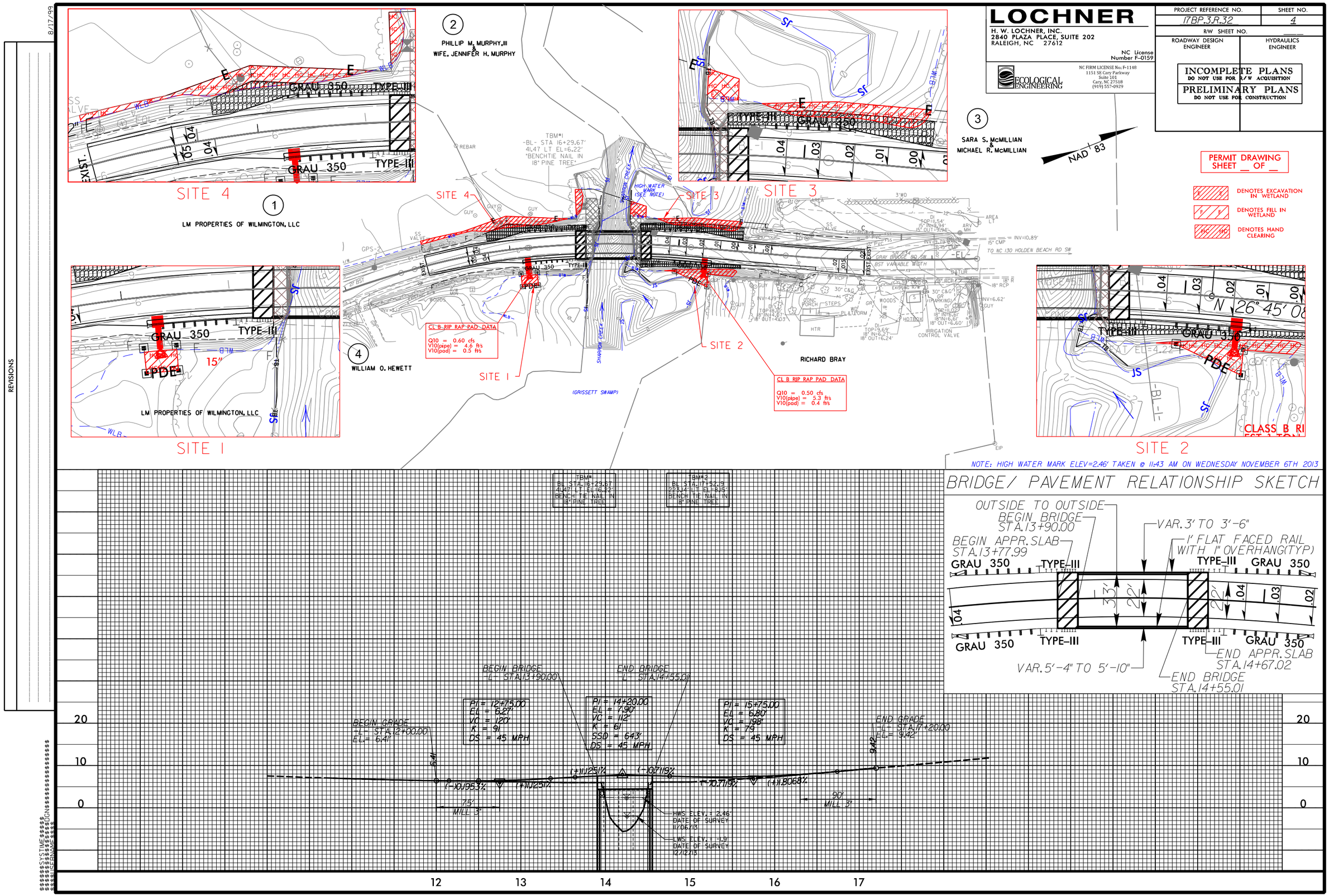

LOCHNER
H. W. LOCHNER, INC.
2840 PLAZA PLACE, SUITE 202
RALEIGH, NC 27612
NC License Number F-0159
ECOLOGICAL ENGINEERING
NC FIRM LICENSE No: F-1148
1151 SE Cary Parkway
Suite 101
Cary, NC 27518
(919) 557-0929
PROJECT REFERENCE NO.
17BP.3.R.32
SHEET NO.
4
R/W SHEET NO.
ROADWAY DESIGN ENGINEER
HYDRAULICS ENGINEER
INCOMPLETE PLANS
DO NOT USE FOR R/W ACQUISITION
PRELIMINARY PLANS
DO NOT USE FOR CONSTRUCTION
PERMIT DRAWING SHEET __ OF __
DENOTES EXCAVATION IN WETLAND
DENOTES FILL IN WETLAND
DENOTES HAND CLEARING
NAD 83
SITE 4
SITE 3
SITE 1
SITE 2
1
LM PROPERTIES OF WILMINGTON, LLC
2
PHILLIP M. MURPHY, III & WIFE, JENNIFER H. MURPHY
3
SARA S. McMILLIAN & MICHAEL R. McMILLIAN
4
WILLIAM O. HEWETT
RICHARD BRAY
TBM#1 -BL- STA 16+29.67' 41.47' LT EL=6.22' "BENCHTIE NAIL IN 18" PINE TREE"
CL B RIP RAP PAD DATA
Q10 = 0.60 cfs
V10(pipe) = 4.6 ft/s
V10(pad) = 0.5 ft/s
CL B RIP RAP PAD DATA
Q10 = 0.50 cfs
V10(pipe) = 5.3 ft/s
V10(pad) = 0.4 ft/s
HIGH WATER MARK (SEE NOTE)
(GRISSETT SWAMP)
SHARRON CREEK
TO NC 130 HOLDEN BEACH RD SW
GRAY BRIDGE RD SW
BST VARIABLE WIDTH
IRRIGATION CONTROL VALVE
CLASS B RI
NOTE: HIGH WATER MARK ELEV=2.46' TAKEN @ 11:43 AM ON WEDNESDAY NOVEMBER 6TH 2013
BRIDGE/ PAVEMENT RELATIONSHIP SKETCH
OUTSIDE TO OUTSIDE
BEGIN BRIDGE STA.13+90.00
BEGIN APPR.SLAB STA.13+77.99
VAR.3' TO 3'-6"
1' FLAT FACED RAIL WITH 1" OVERHANG(TYP)
GRAU 350
TYPE-III
VAR.5'-4" TO 5'-10"
END APPR.SLAB STA.14+67.02
END BRIDGE STA.14+55.01
BEGIN BRIDGE -L- STA.13+90.00
END BRIDGE -L- STA.14+55.01
BEGIN GRADE -L- STA.12+00.00 EL.= 6.41'
END GRADE -L- STA.17+20.00 EL.= 9.42'
PI = 12+75.00 EL = 6.27' VC = 120' K = 91 DS = 45 MPH
PI = 14+20.00 EL = 7.90' VC = 112' K = 61 SSD = 643' DS = 45 MPH
PI = 15+75.00 EL = 6.80' VC = 198' K = 79 DS = 45 MPH
(-)0.1953%
(+)1.1251%
(+)1.1251%
(-)0.7119%
(-)0.7119%
(+)1.8068%
75' MILL 3"
90' MILL 3"
HWS ELEV. = 2.46' DATE OF SURVEY 11/06/13
LWS ELEV. = -1.9' DATE OF SURVEY 12/12/13
20
10
0
12
13
14
15
16
17
REVISIONS
8/17/99