PROJECT REFERENCE NO.	SHEET NO.
W-52030	2D-1

PAVEMENT MARKING DETAILS

PAVEMENT MARKER DETAIL FOR CONCRETE ISLANDS

RAISED PAVEMENT MARKER (Y/Y TYP.)
(STD. DWG 1251.01)

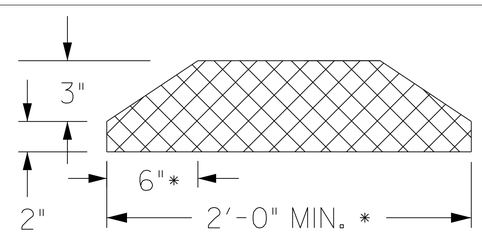

*DIMENSIONS FOR ISLANDS LESS THAN 4'-0"

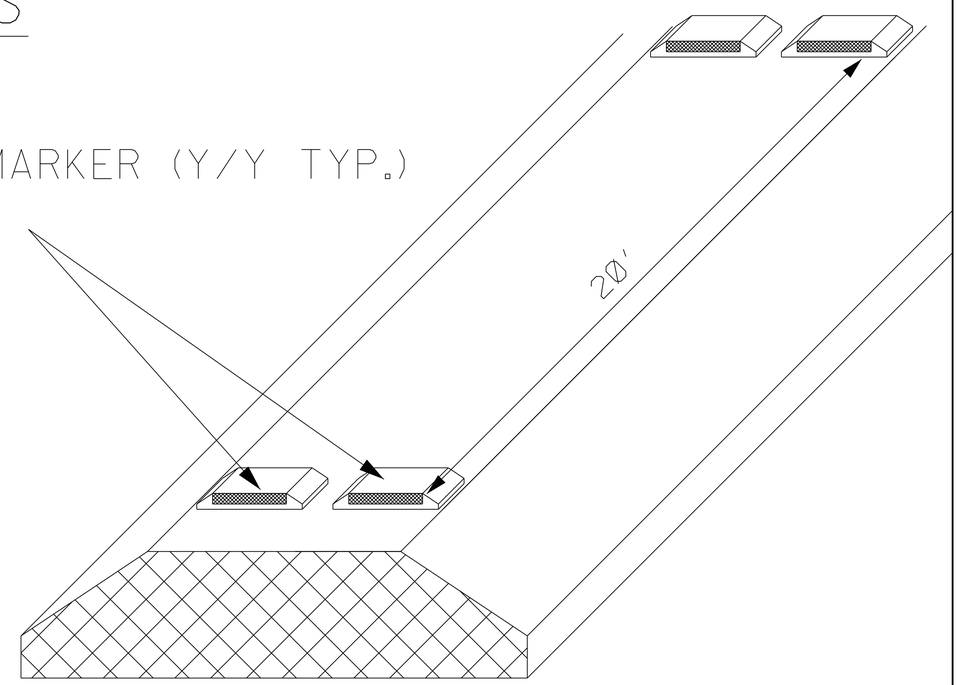

MONOLITHIC CONCRETE ISLAND

(SEE STANDARD DRAWINGS 852.01, 852.02, & 852.06 FOR DETAILS.)

REVISIONS

8/17/99

15-SEP-2015 14:12
C:\SDV\20\NEW HANOVER\Isabel Holmes Bridge Restriping on West Side of Bridge\ROADWAY\Proj\Plan_Sheets\W-52030_45333_FS15_IHB_PSH 2D1.dgn
$$$$USERNAME$$$$